Using Precast Panels at Ends of Spans

Jamie Griffin, P.E.
Bridge Division
Design Branch

Objectives

- Background
- Research
- Details
- Feedback

Precast Panel Benefits

- Accelerated bridge construction
- Reduced costs
- Improved jobsite safety

OLD Standard

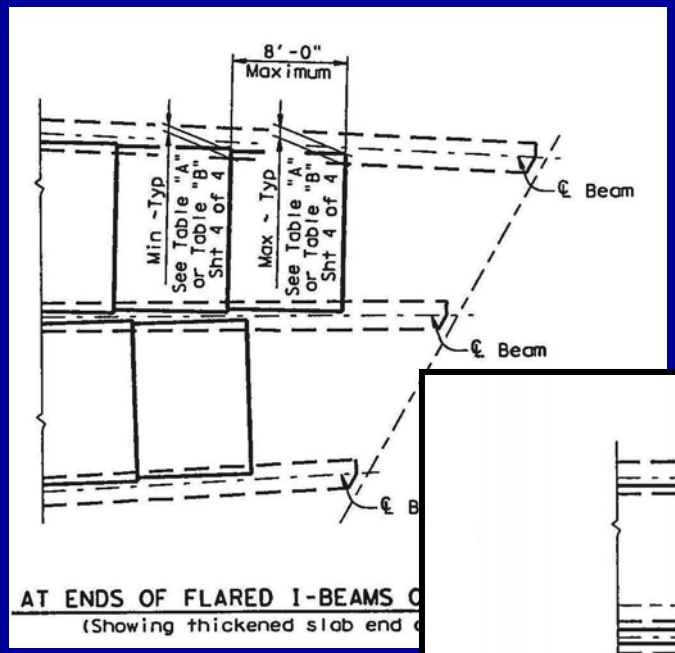

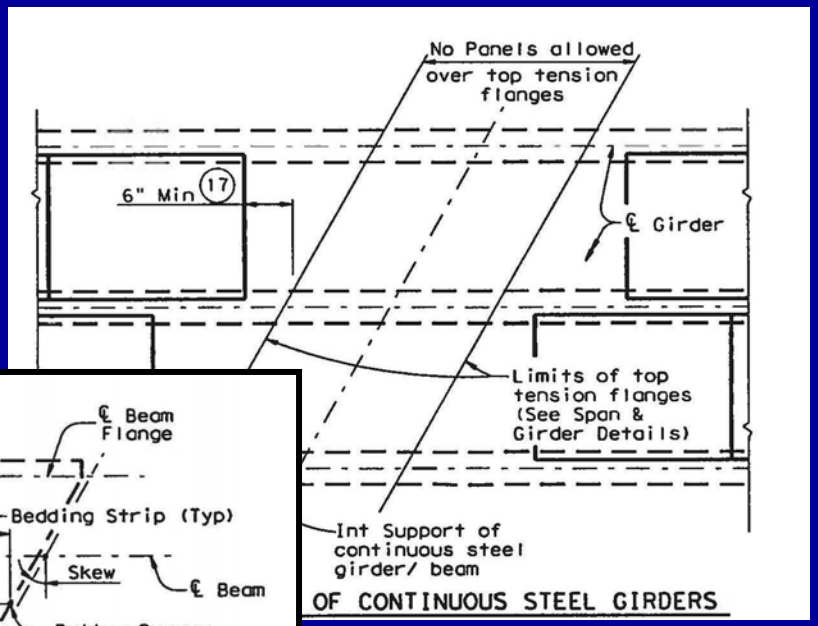

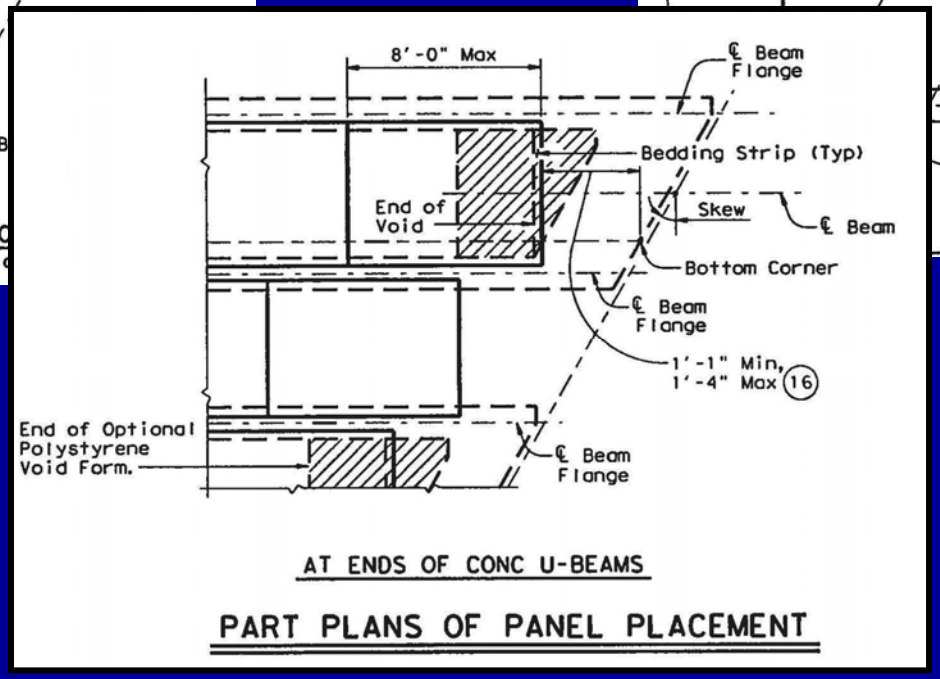

Old Forming Method

Drawbacks of Old Method

- More costly
- More time-consuming
- Does not seal as well as panels
- Can pose a safety hazard

Research

- Project 4418
  - Studied performance of panels at slab ends
  - Studied bridges with no skew
- Project 5367
  - Studied skewed bridges
  - Investigated fatigue performance

Details

Old Version

Old Method

Skewed

Old Method

No Skew

Details

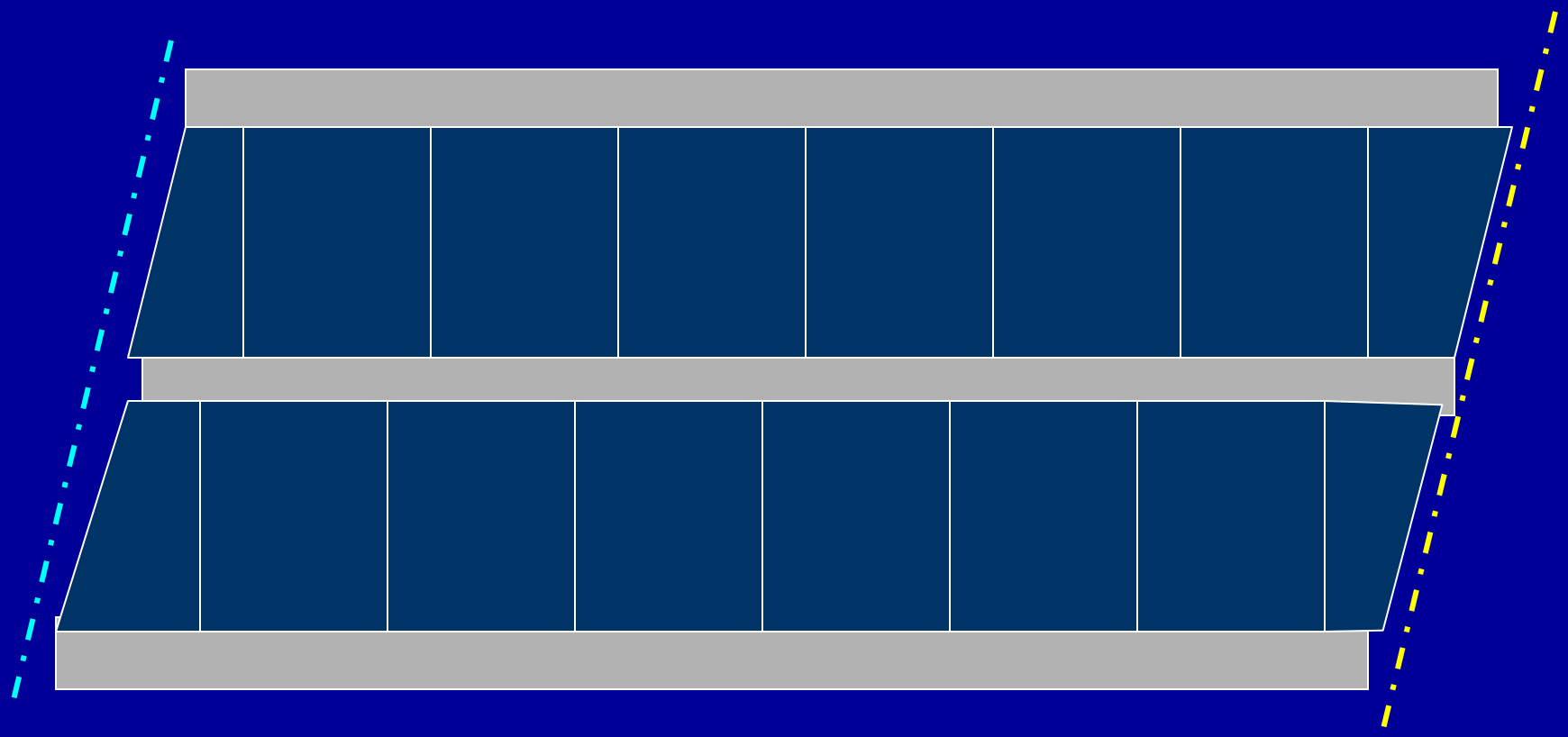

New Version

New Method

New PCP Standard

HL93 LOADING SHEET 1 OF 4

Texas Department of Transportation
Bridge Division

PRESTRESSED
CONCRETE PANELS
OPTIONAL DECK DETAILS

PCP

FILE: pcpstdel.dgn	DN: TxDOT	CK: TxDOT	DW: JTR	CK: JMH
© TxDOT April 2006	DISTRICT	FEDERAL AID PROJECT		SHEET
REVISIONS 08-07: Added I-Girders & added note to WWR splice detail. 10-10: Added Option 2 & referenced PCP-FAB.	COUNTY	CONTROL	SECT	JOB	HIGHWAY

New PCP Standard

HL93 LOADING

Texas Department of Transportation
Bridge Division

PRESTRESSED CONCRETE PANEL FABRICATION DETAILS

PCP-FAB

FILE: pcpstde2.dgn	DN: TxDOT	CK: TxDOT	DW: JTR	CK: JMH	
© TxDOT October 2010	DISTRICT	FEDERAL AID PROJECT		SHEET	
REVISIONS					
	COUNTY	CONTROL	SECT	JOB	HIGHWAY

HL93 LOADING SHEET 1 OF 4

Texas Department of Transportation
Bridge Division

PRESTRESSED CONCRETE PANELS OPTIONAL DECK DETAILS

PCP

FILE: pcpstde1.dgn	DN: TxDOT	CK: TxDOT	DW: JTR	CK: JMH	
© TxDOT April 2006	DISTRICT	FEDERAL AID PROJECT		SHEET	
REVISIONS 08-07: Added I-Girders & added note to WWR splice detail. 10-10: Added Option 2 & referenced PCP-FAB.					
	COUNTY	CONTROL	SECT	JOB	HIGHWAY

New PCP-FAB Standard

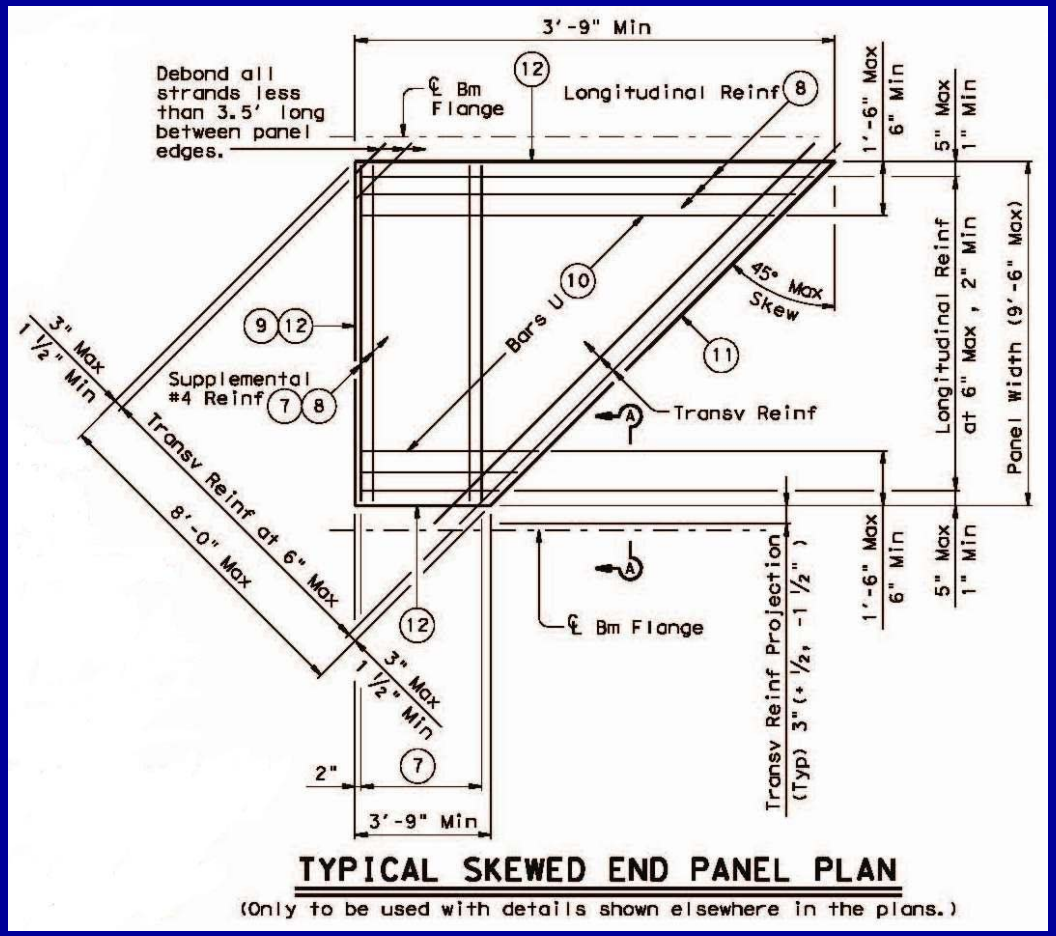

Skewed End Panel

New PCP Standard

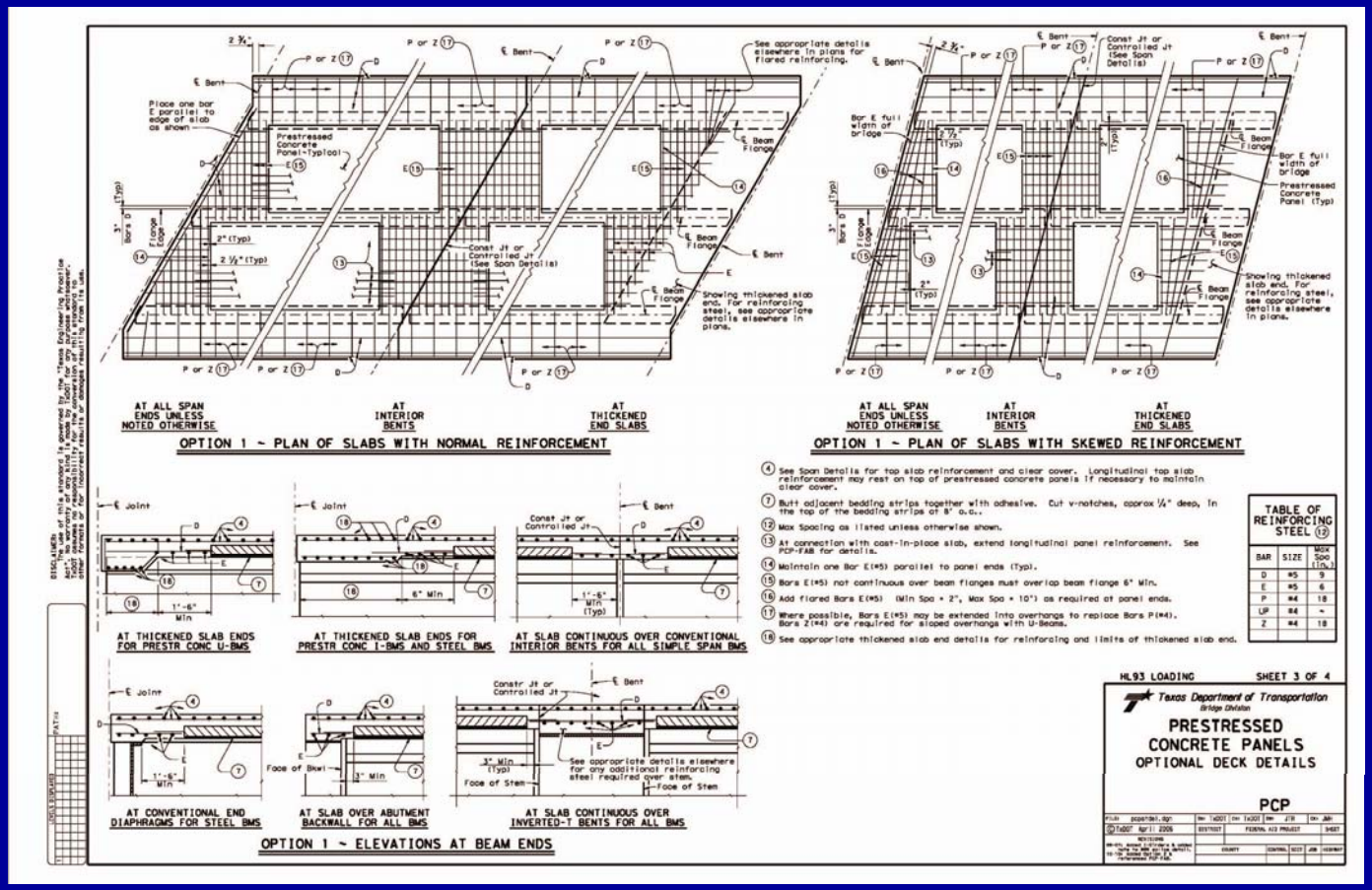

Option I

New PCP Standard

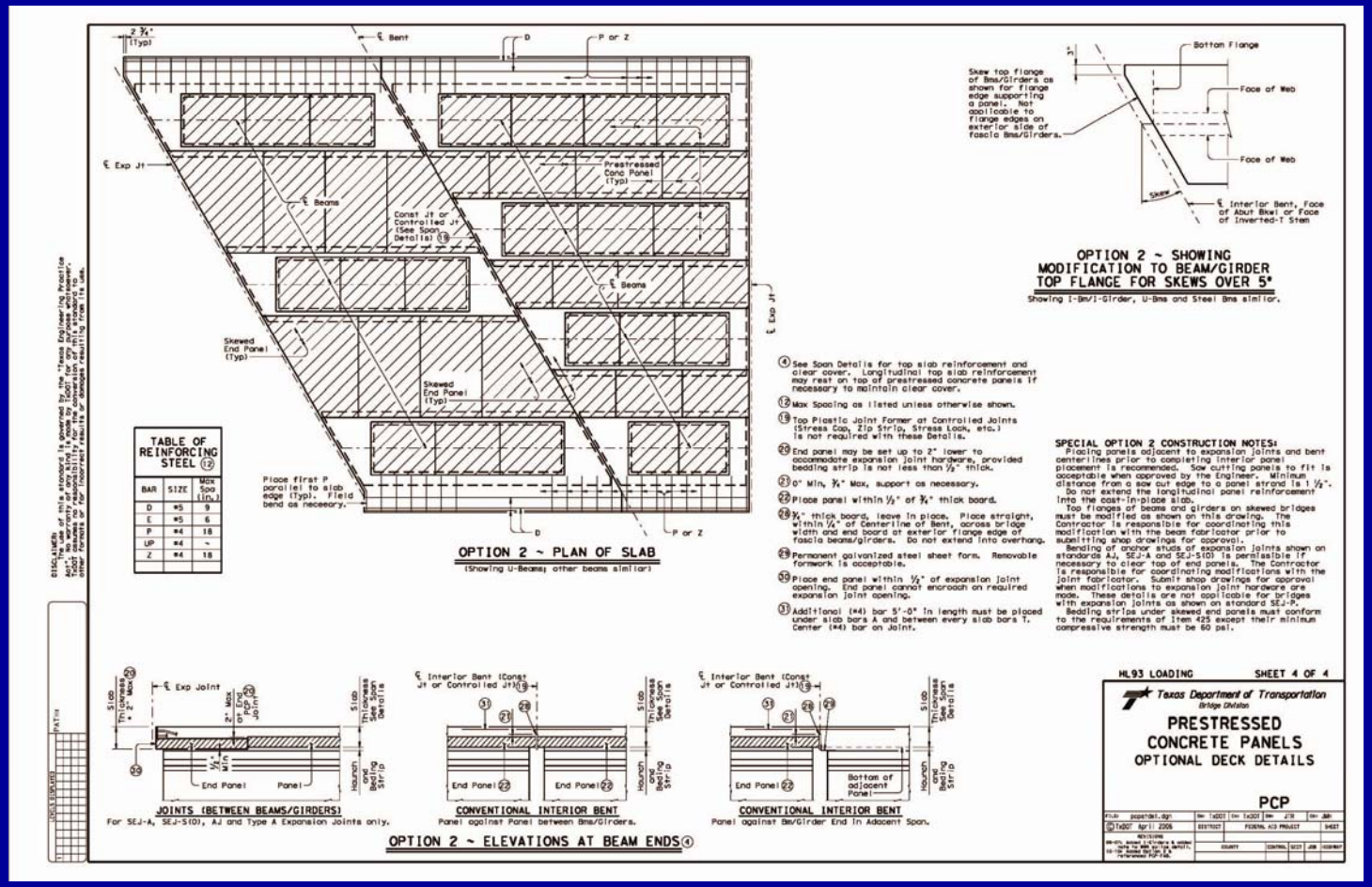

Option II

Do Not Use PCPs to the End if…

- Skew Exceeds 45°

Do Not Use PCPs to the End if…

- Skew Exceeds 45°
- Using SEJ-P

Do Not Use PCPs to the End if…

- Skew Exceeds 45°
- Using SEJ-P
- Using a horizontally curved steel girder
- In the tension zone on straight continuous steel girders

New PCP Standard

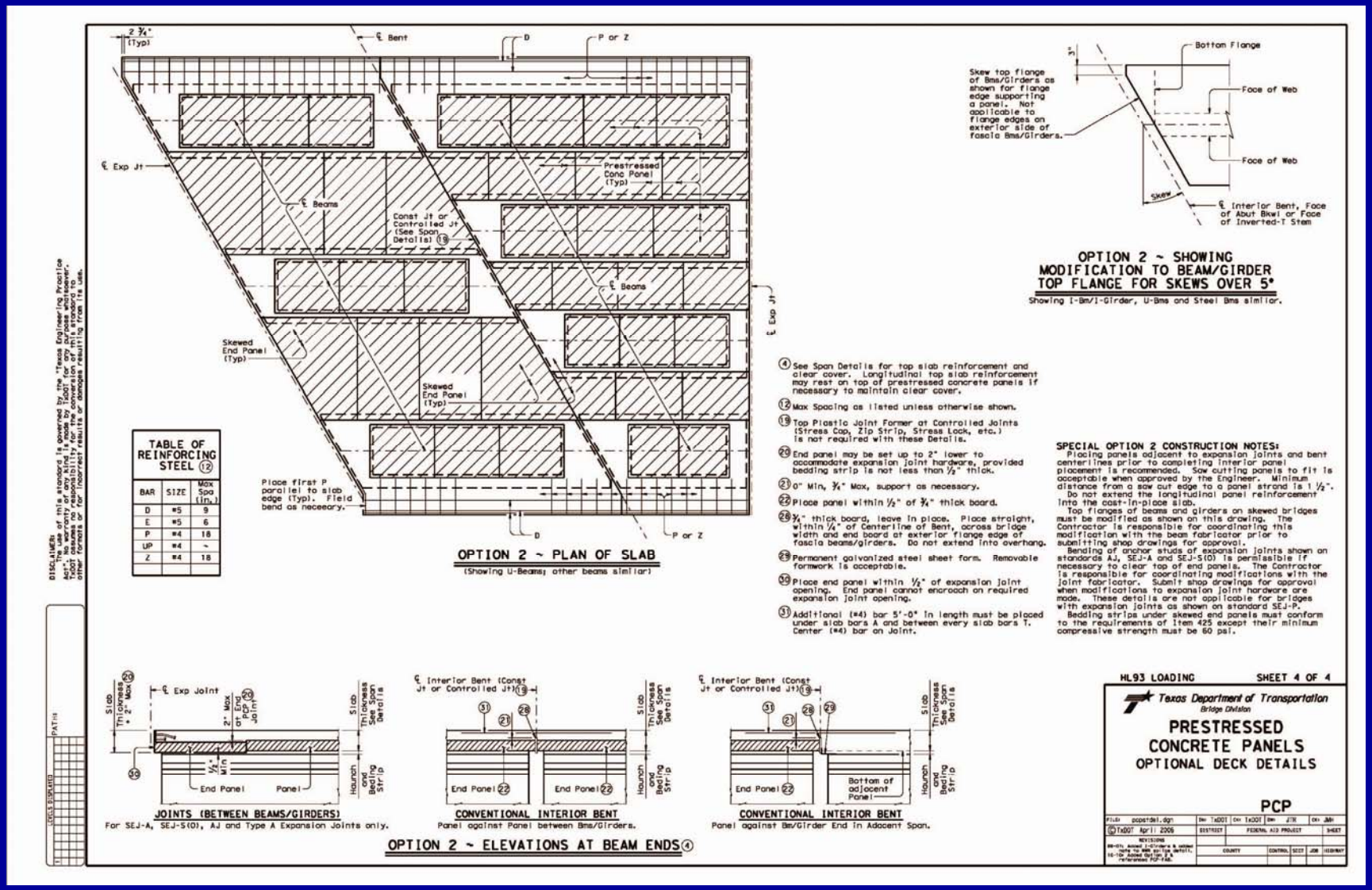

Old Method

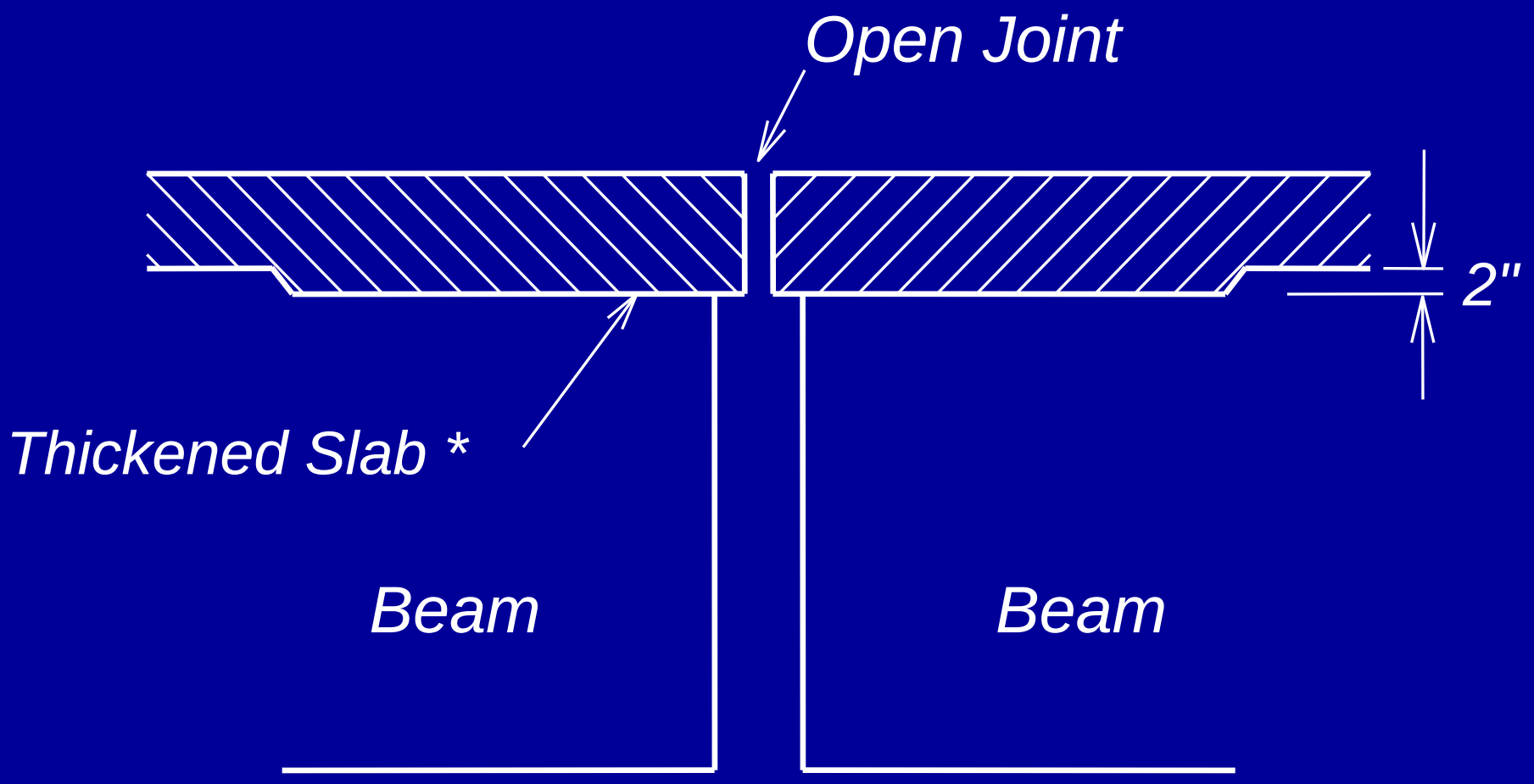

New Method

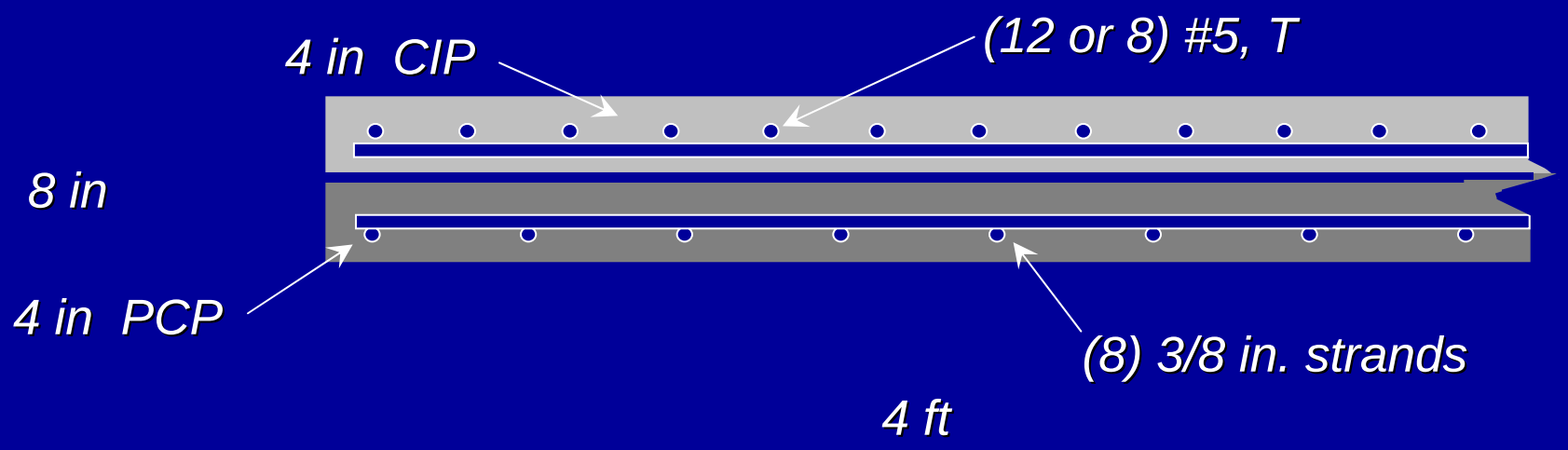

Slab and Panel Detail

Section at Expansion Joint Between Beams

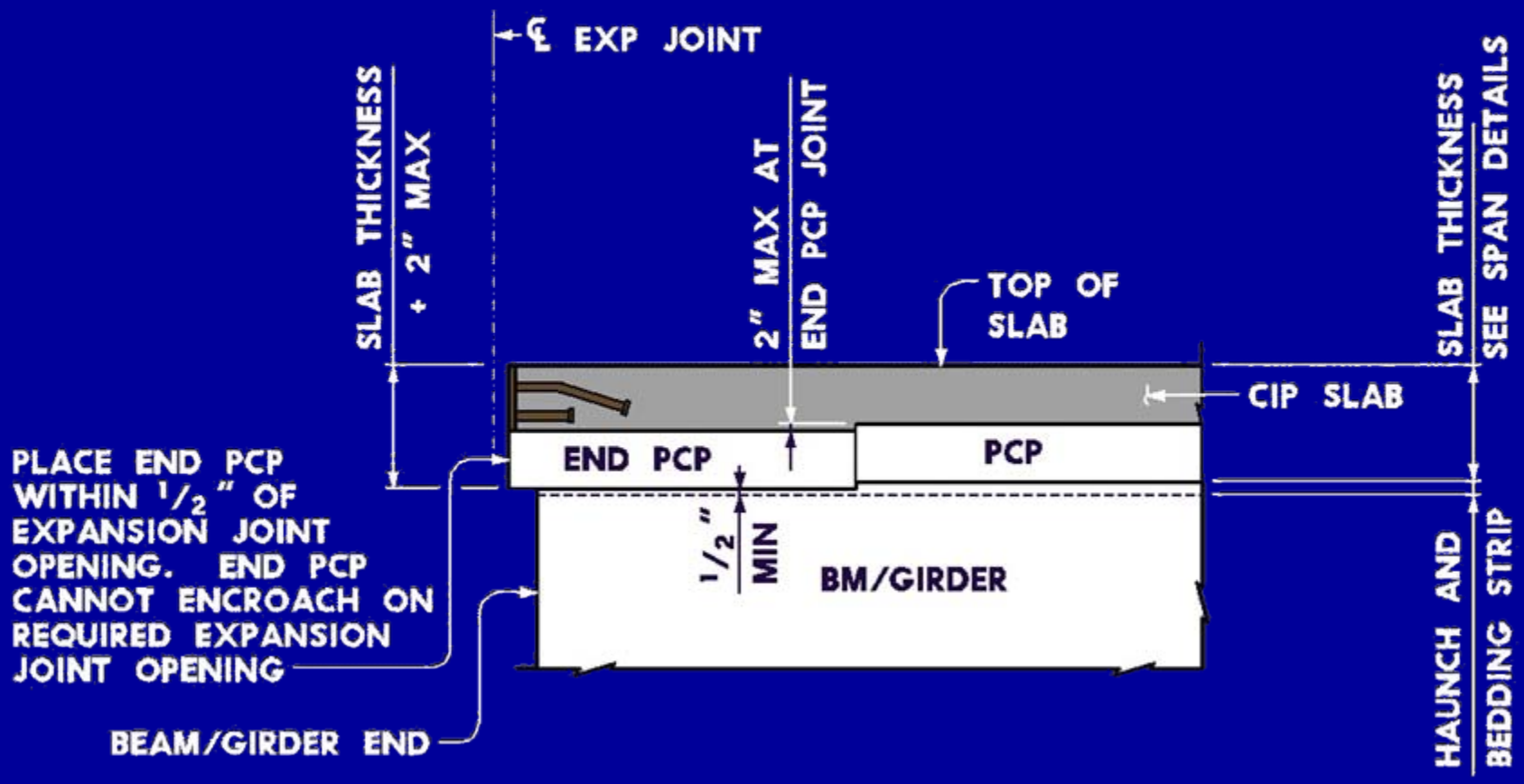

Section at Expansion Joint at Center of Beams

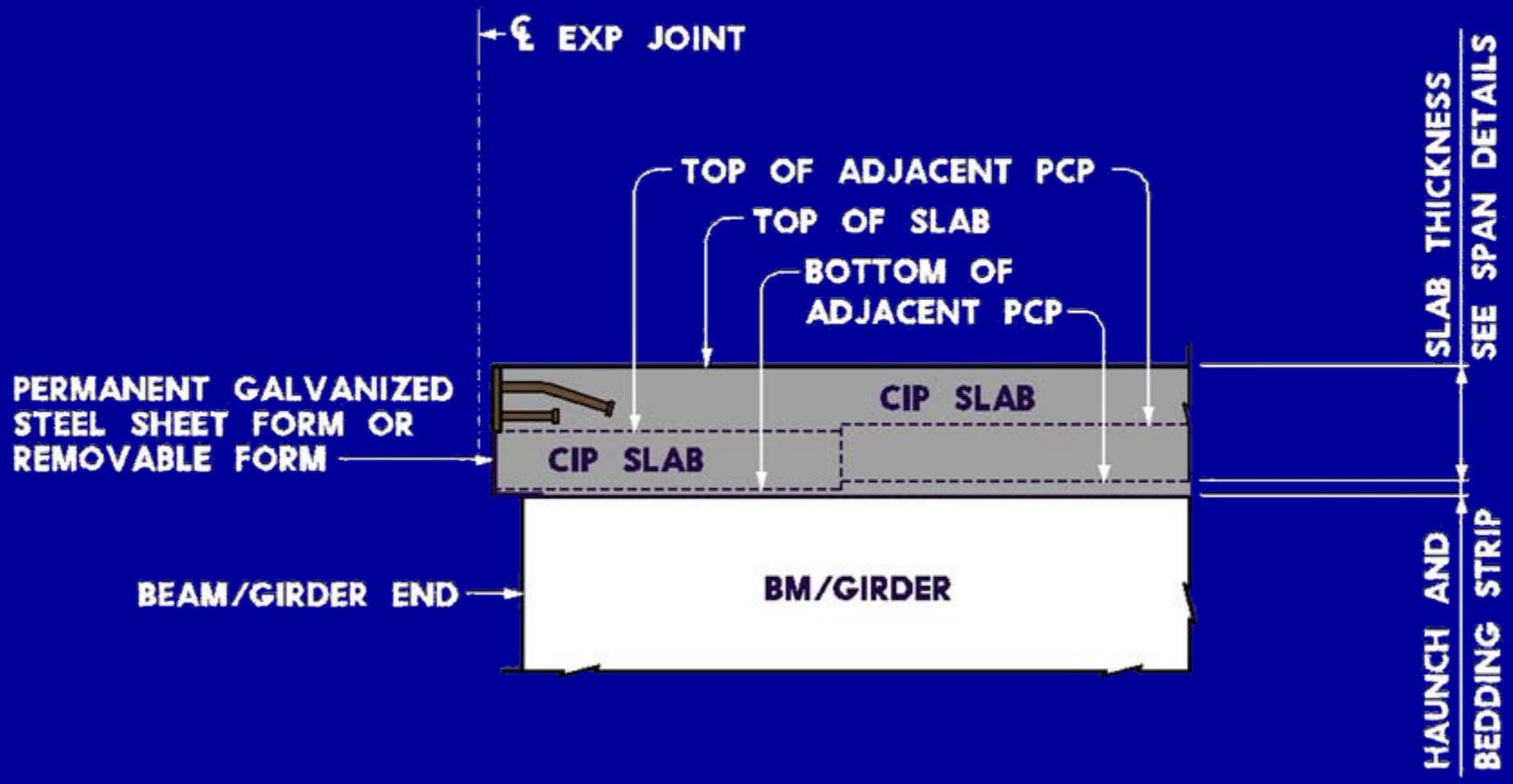

Old Method

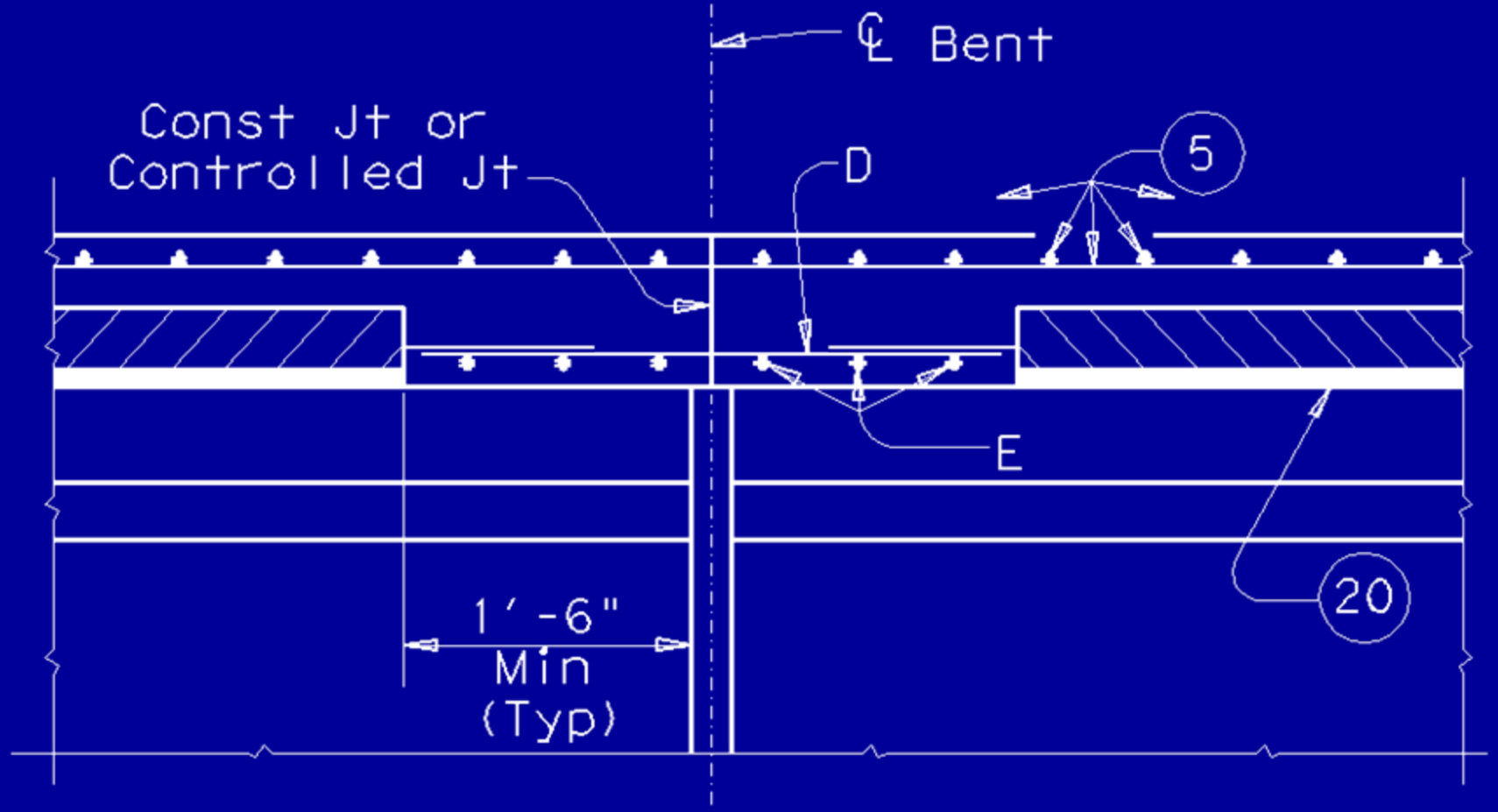

AT SLAB CONTINUOUS OVER CONVENTIONAL INTERIOR BENTS FOR ALL SIMPLE SPAN BMS

Section at Continuous Joint Between Beams

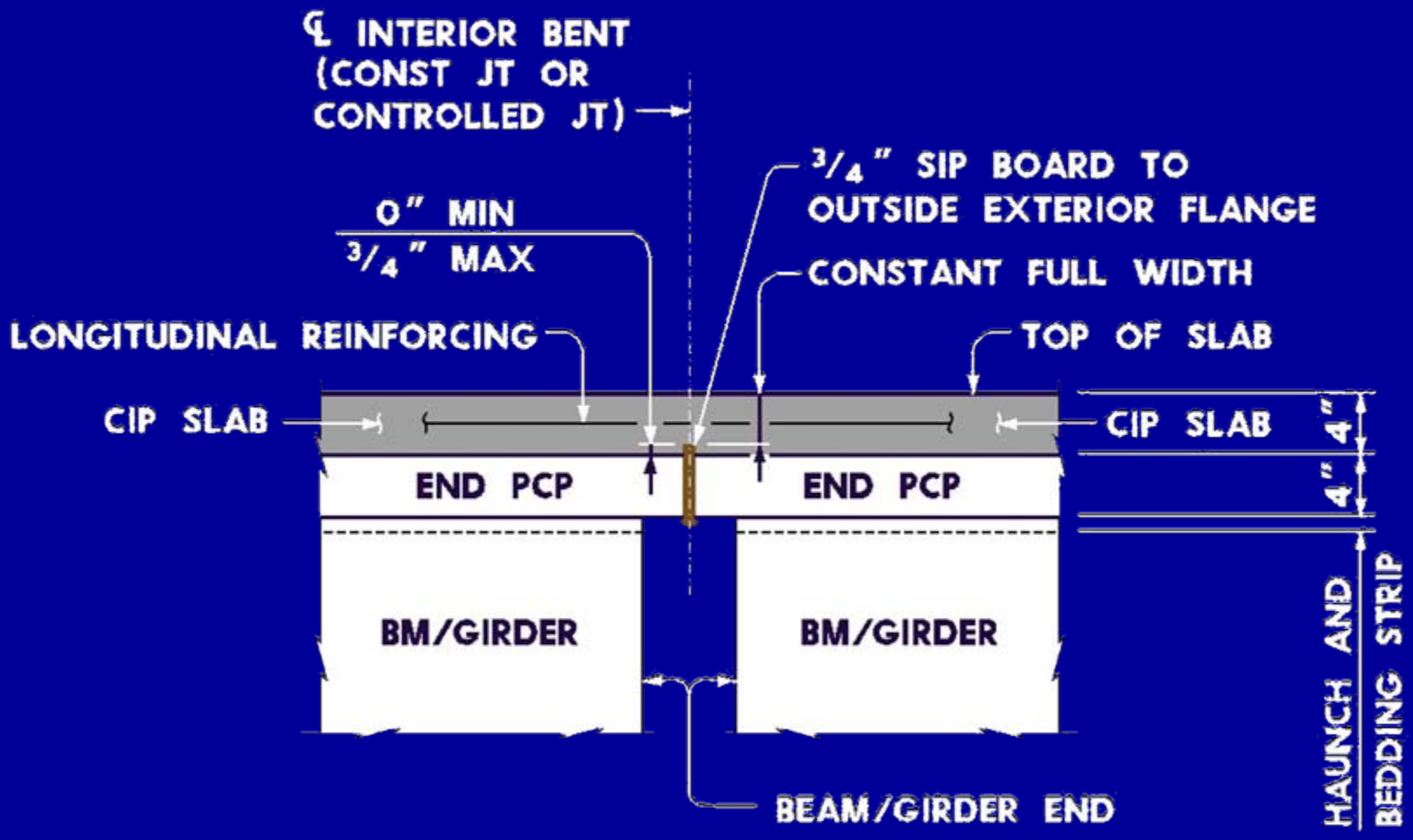

Section at Continuous Joint at Center of Beams

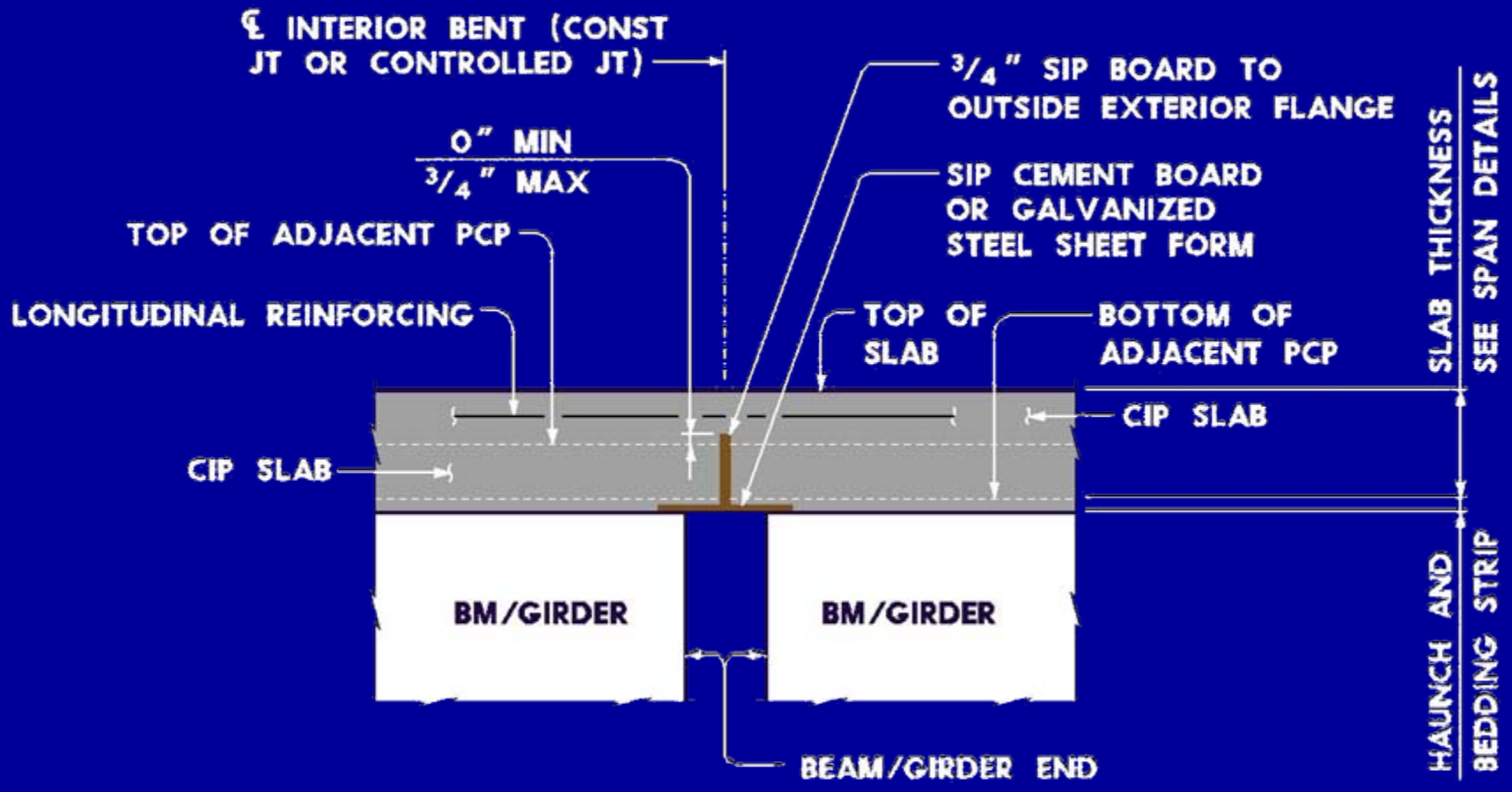

Implementation

- About 20 projects
- Mostly unskewed
- Great feedback

Implementation

- About 20 projects
- Mostly unskewed
- Great feedback
- Additional Info?

Jamie.Griffin@txdot.gov

Tolerances

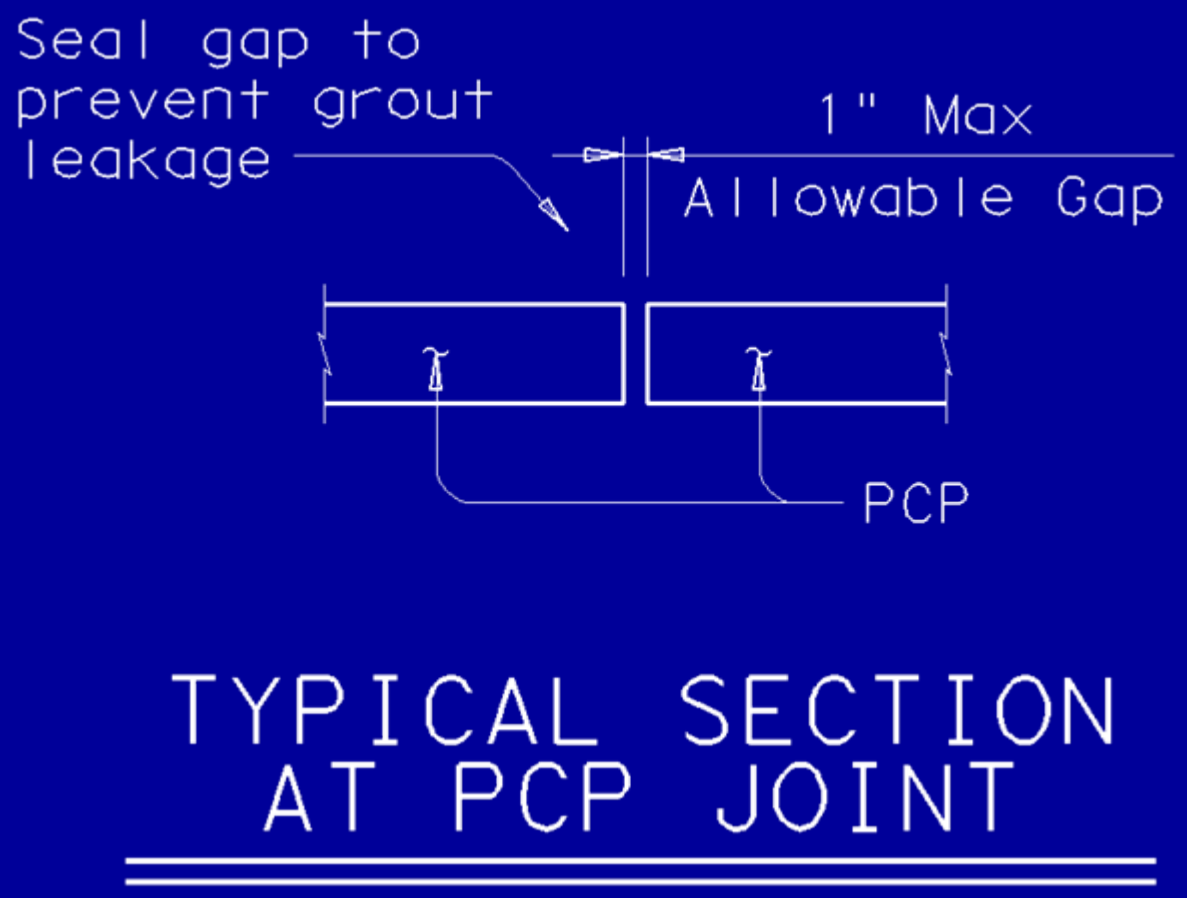
Seal gap to prevent grout leakage
1" Max
Allowable Gap
PCP
TYPICAL SECTION AT PCP JOINT

Tolerances

Caney Creek Bridge

Caney Creek Bridge

Caney Creek Bridge

Caney Creek Bridge

Galveston Causeway

Galveston Causeway

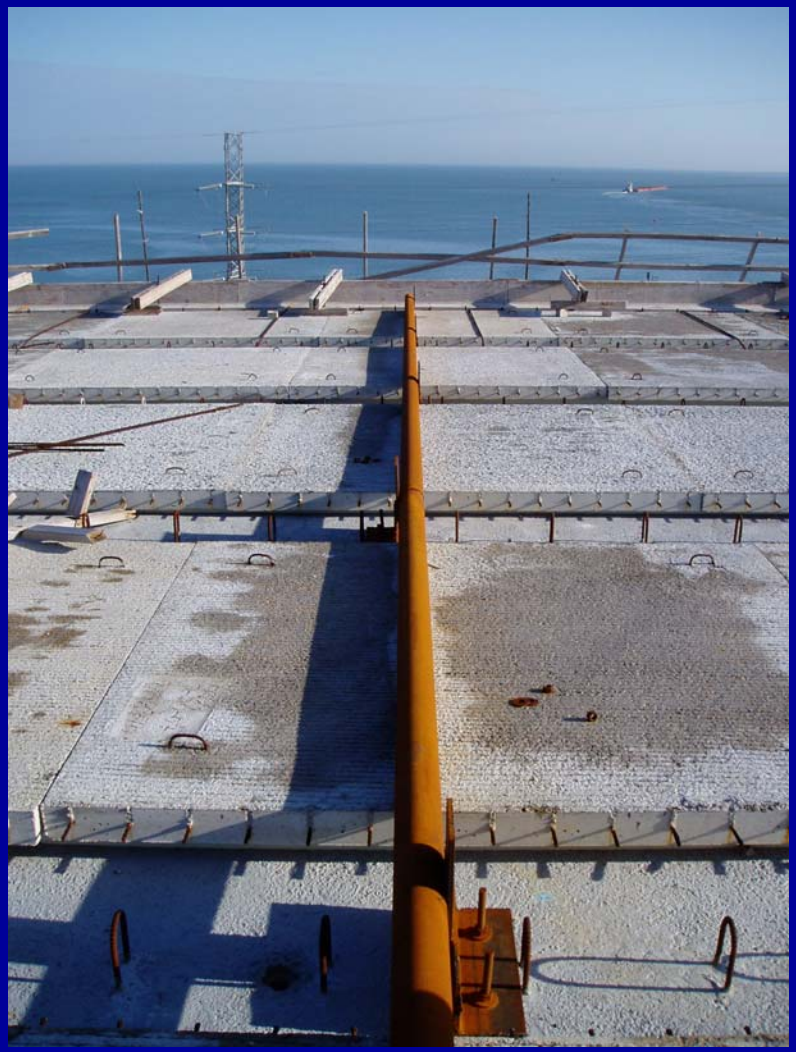

Galveston Causeway

Galveston Causeway

Questions?

Jamie.Griffin@txdot.gov

Using Precast Panels at Ends of Spans

Jamie Griffin, P.E.
Bridge Division
Design Branch