Fatigue Repair of the I-345 Bridges

Yuan Zhao, P.E., Ph.D.

Bridge Presentation Webinar
February 25, 2011

Fracture Critical Units

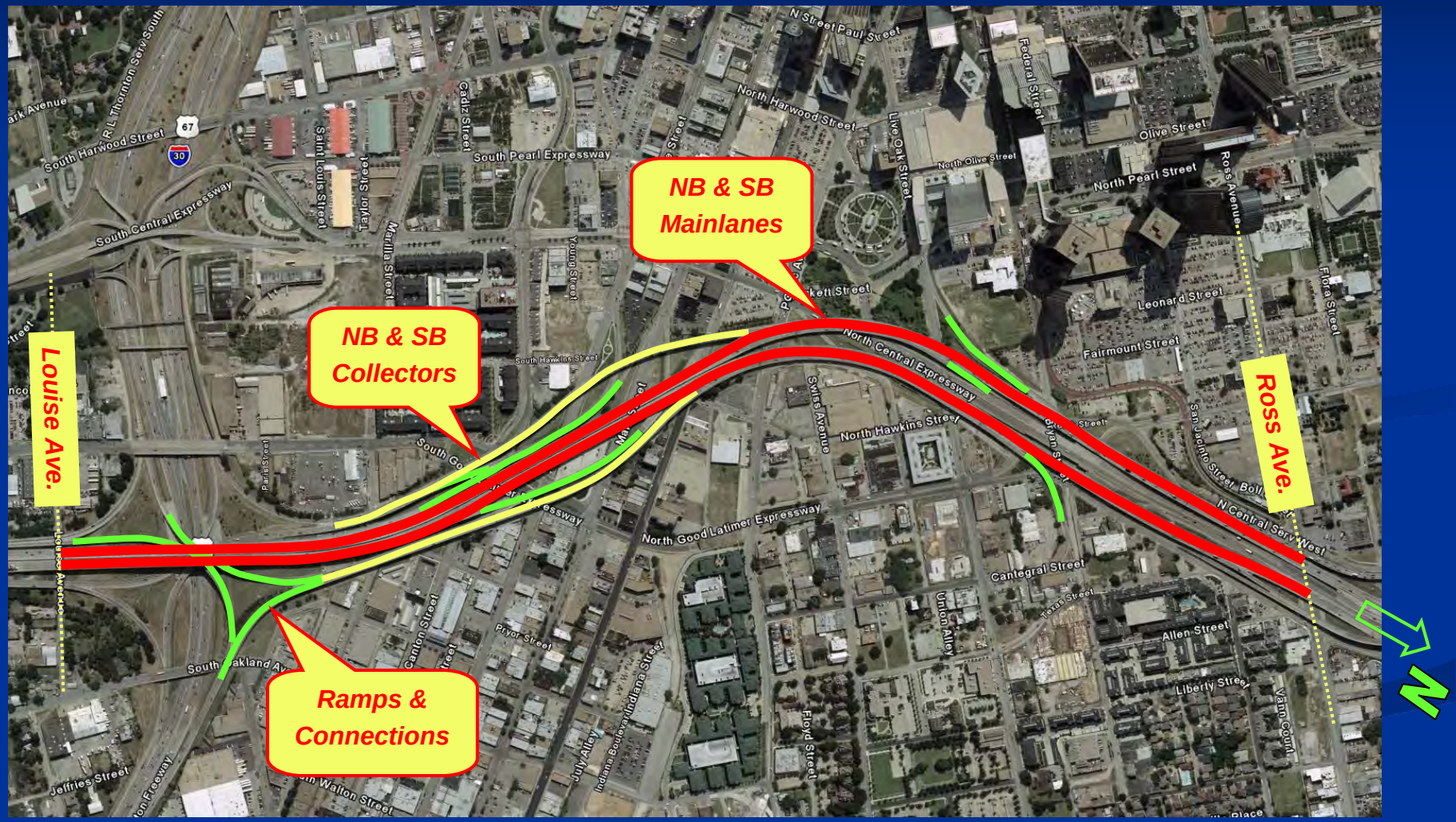

8 9:11AM

JUL 9 2008

Corona
Extra

3 10 2008

8 9:05 AM

8 9:39 AM

8 9:36 AM

8 9:26 AM

8 9:42 AM

8 8:58 AM

Sheraton

8 9:28 AM

Fatigue
Cracking

Distortion-Induced Fatigue

- Pre-1985 AASHTO Spec detail
- Does not usually cause catastrophic failures
- Largest source of fatigue cracking

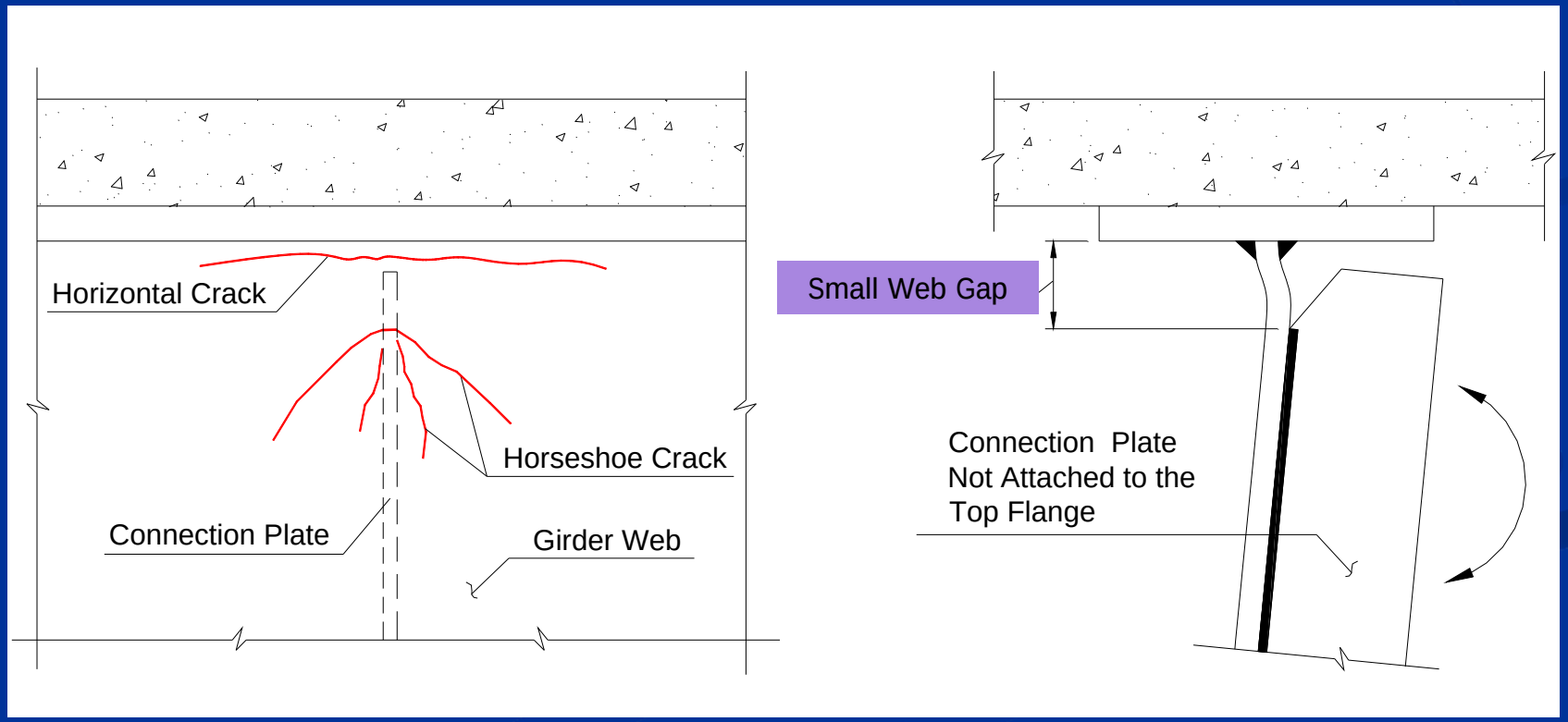

Design Features

- AASHTO 1965 Spec Design
- Large girder spacing
- Floorbeam-girder connections field welded
- PT Deck on top of floorbeams
- Girder skew, curve, flare, haunch, etc.
- Unsymmetric column support

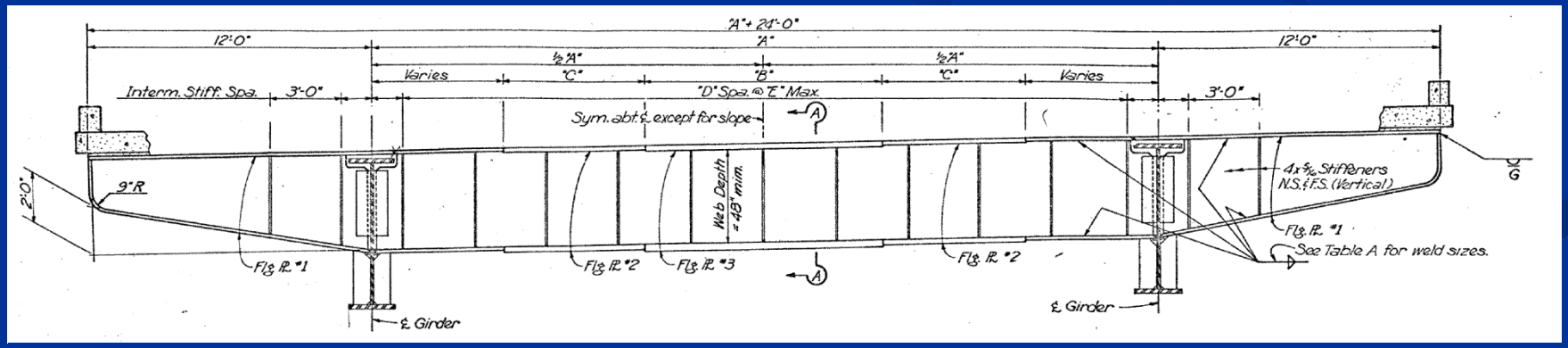

Typical Transverse Section

Unsymmetric Columns

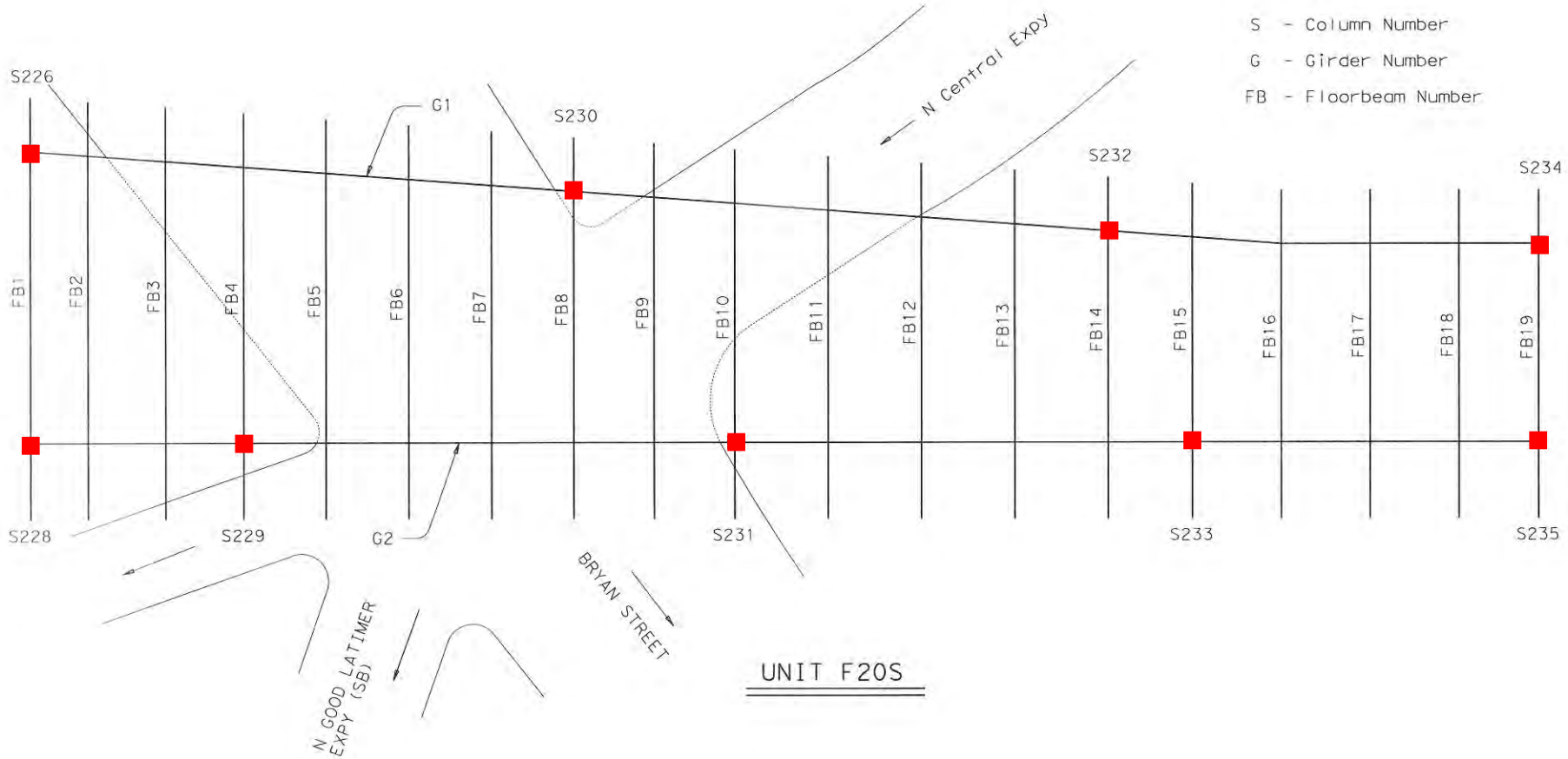

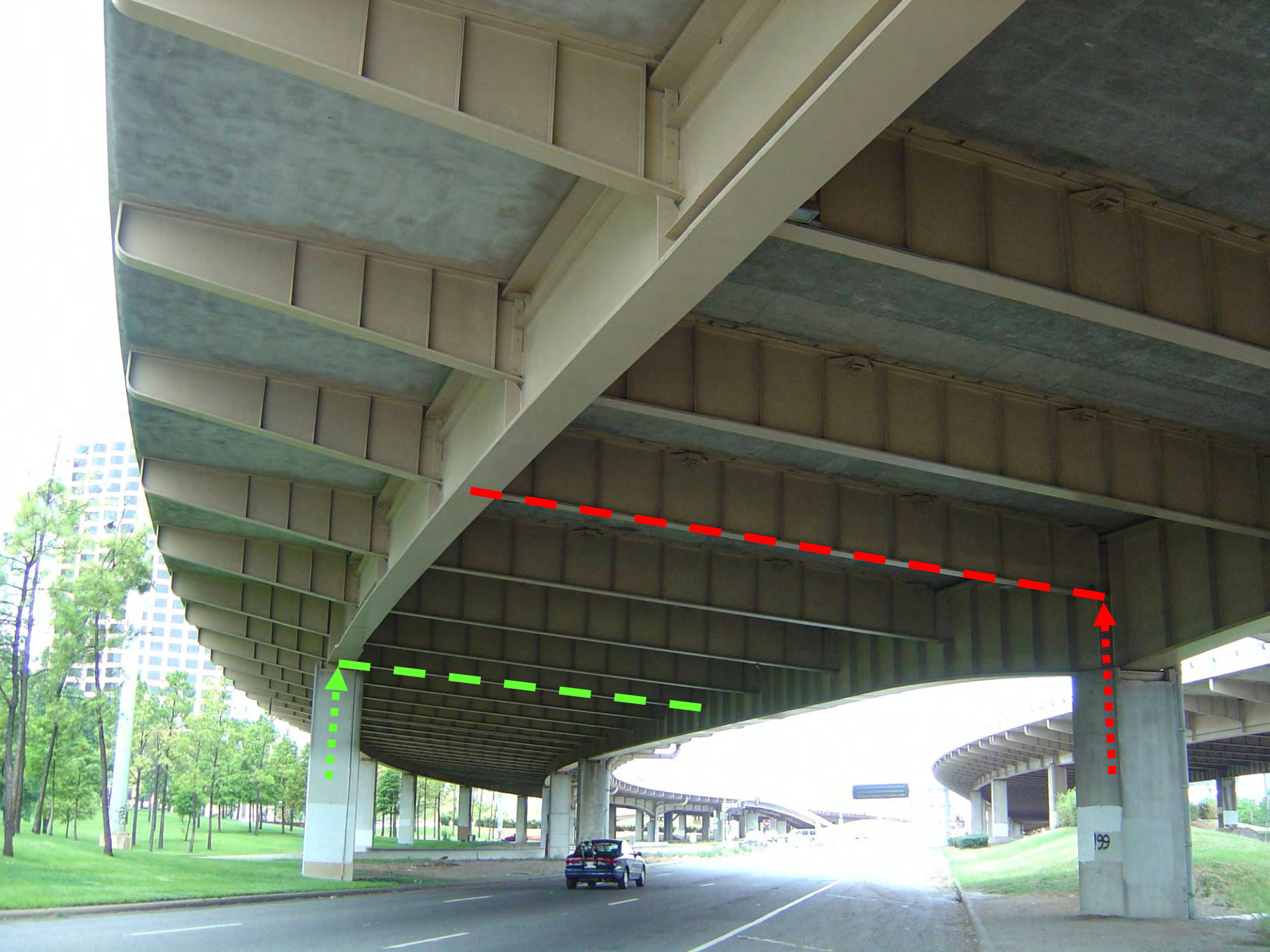
199

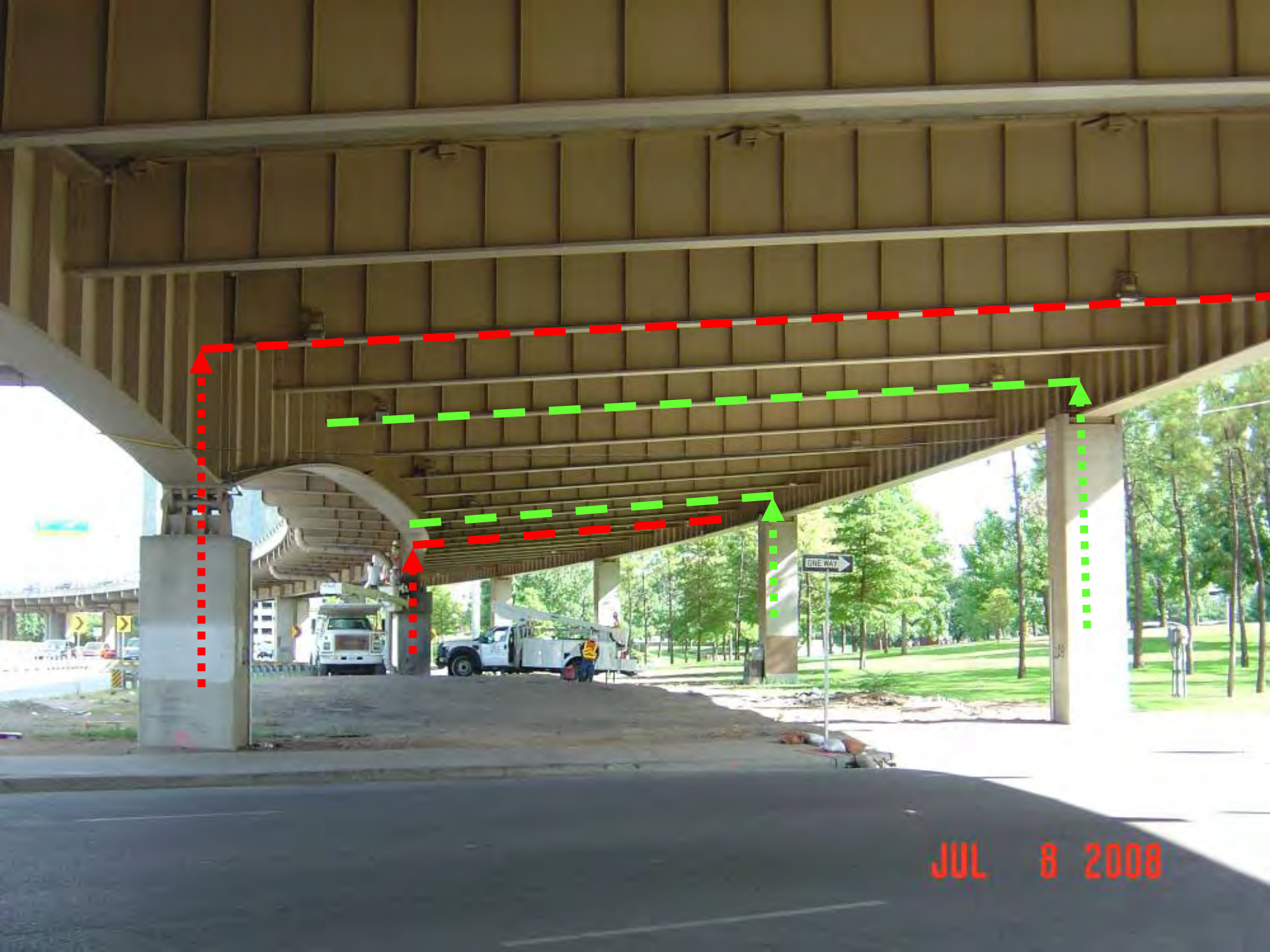
ONE WAY
JUL 8 2008

Floorbeam-Girder Connection

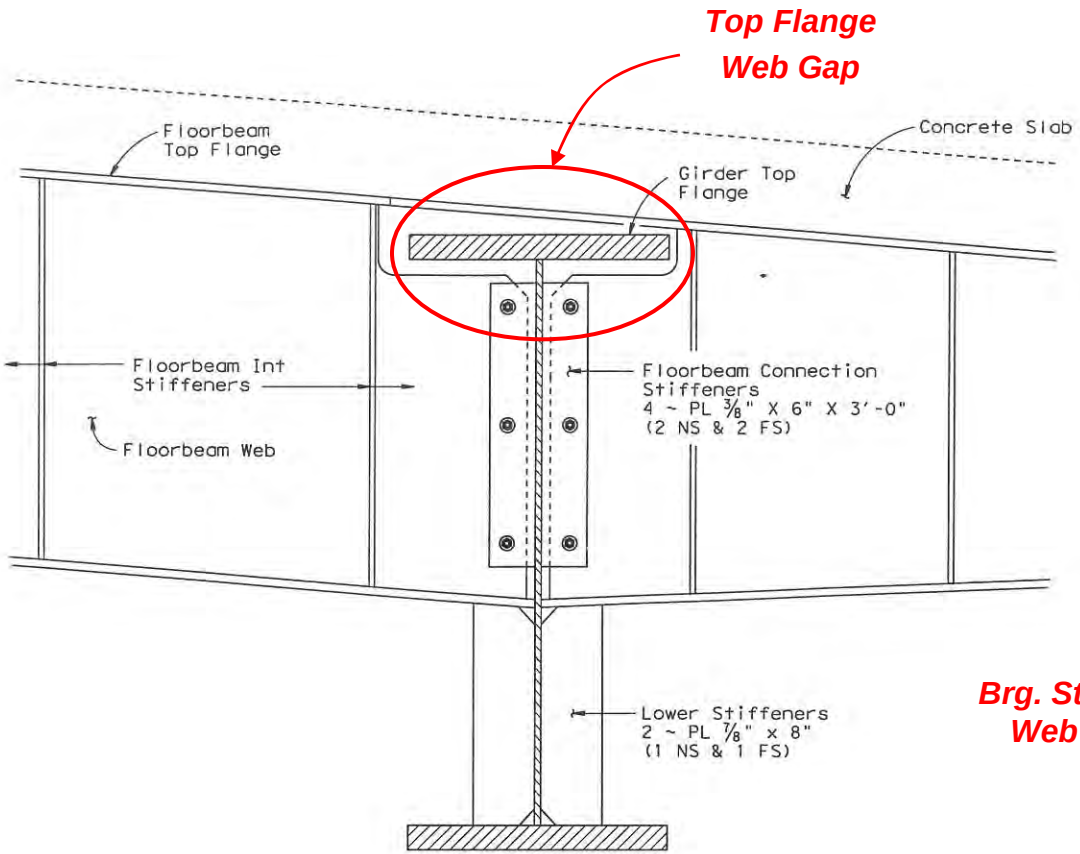

SECTION THRU GIRDER

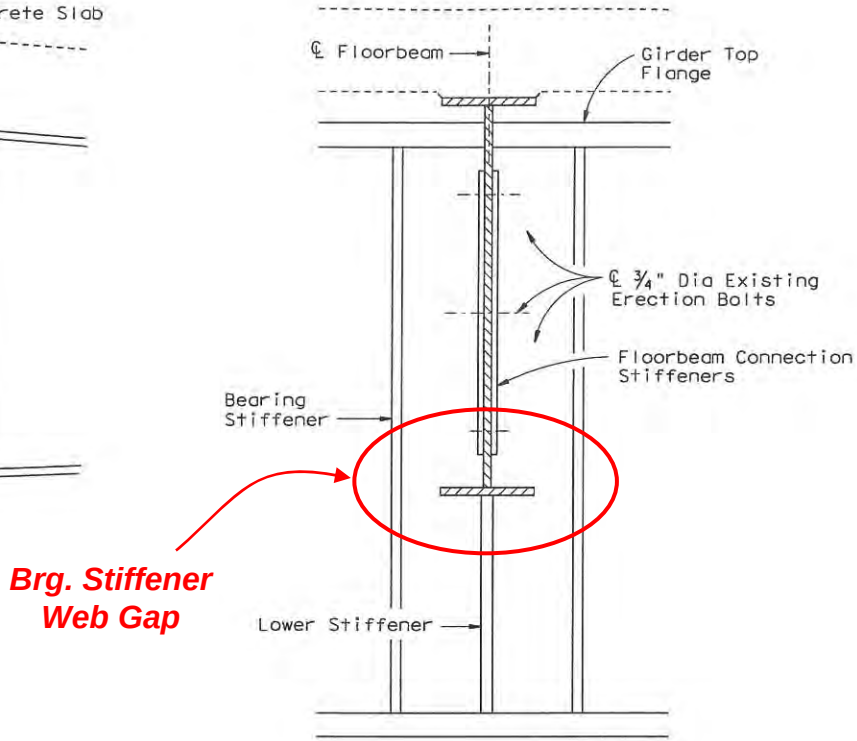

SECTION THRU FLOORBEAM

Previous Repairs

- Total 2237 connections
- 2000 emergency repair at 19 cracked connections
  - Welded retrofit stiffener
- 2004 repair at a total of 1077 connections
  - Only 87 actually cracked
  - Same repair as in 2000
  - Repair welds treated with UIT

As-Built Connection

Previously Repaired Connection

As-Built Connection

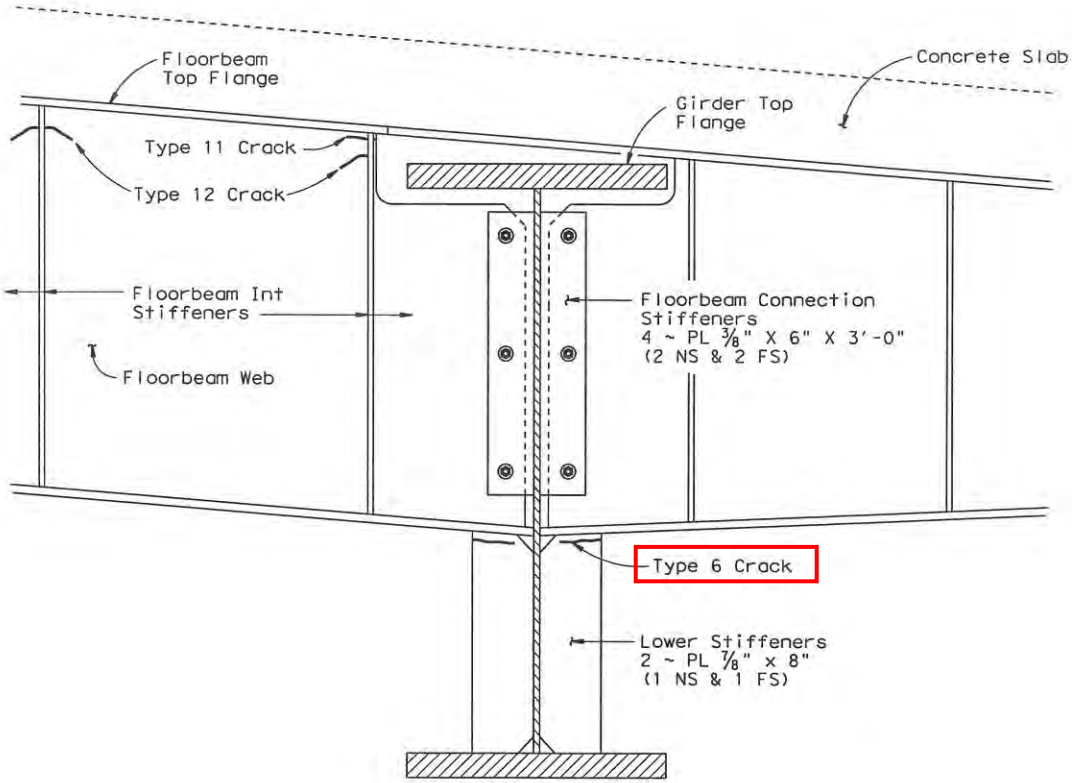

SECTION THRU GIRDER

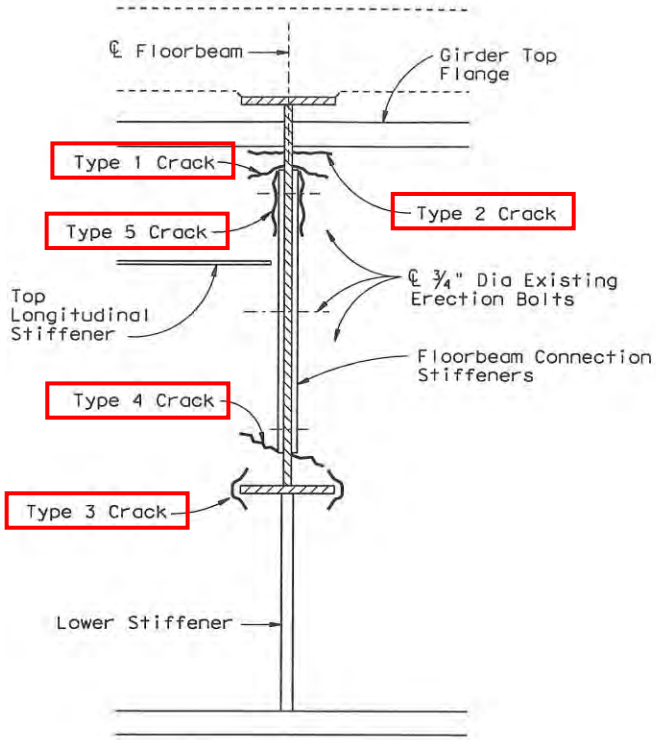

SECTION THRU FLOORBEAM

AS-BUILT FLOORBEAM-GIRDER CONNECTION

06 07 08

F16N, G1

FB 9 Int (R)

#05 TY1

L=0.25"

06/06 + 1½"

08/07 + ½"

10/08 + ½" L=2.5

Previously Repaired Connection

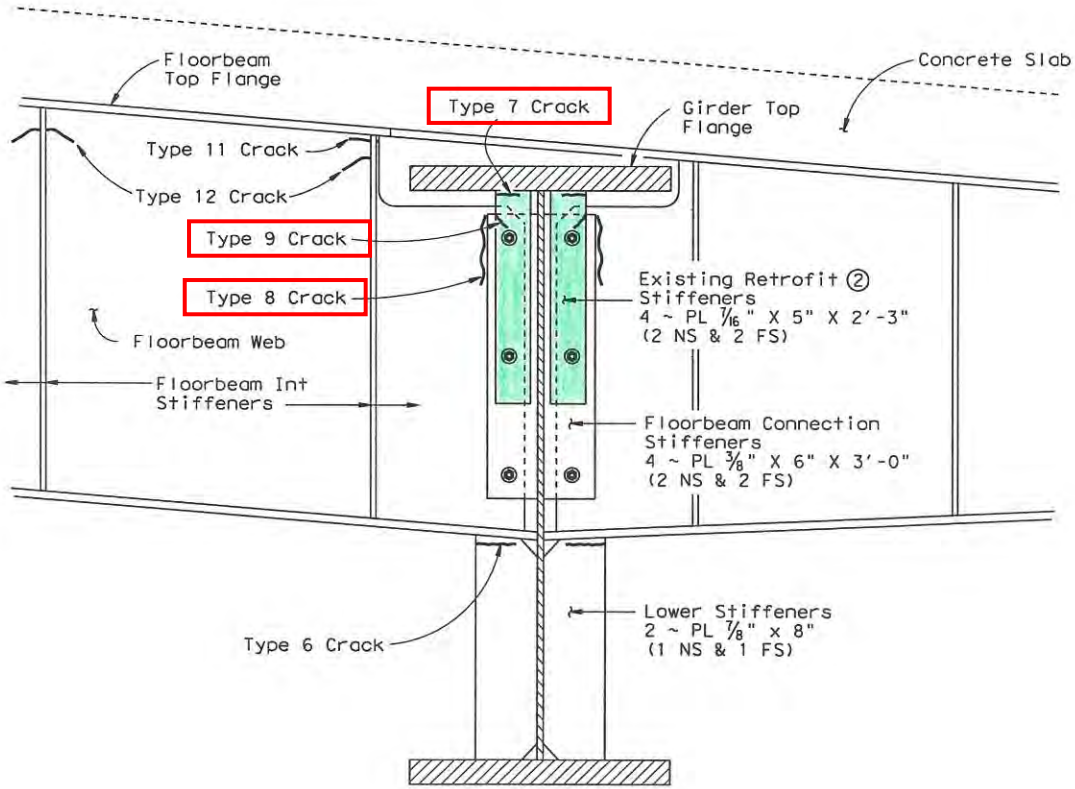

SECTION THRU GIRDER

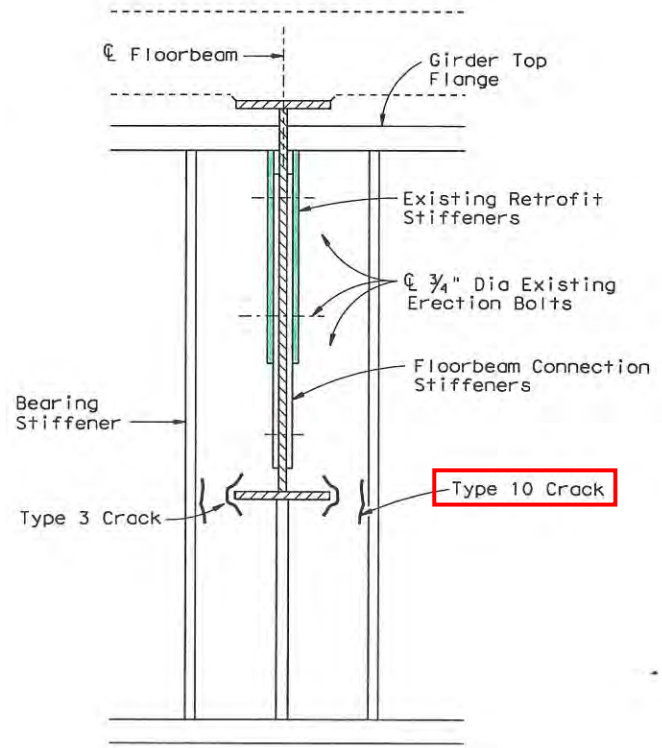

SECTION THRU FLOORBEAM

PREVIOUSLY REPAIRED FLOORBEAM-GIRDER CONNECTION

Floorbeam Stiffener Cracks

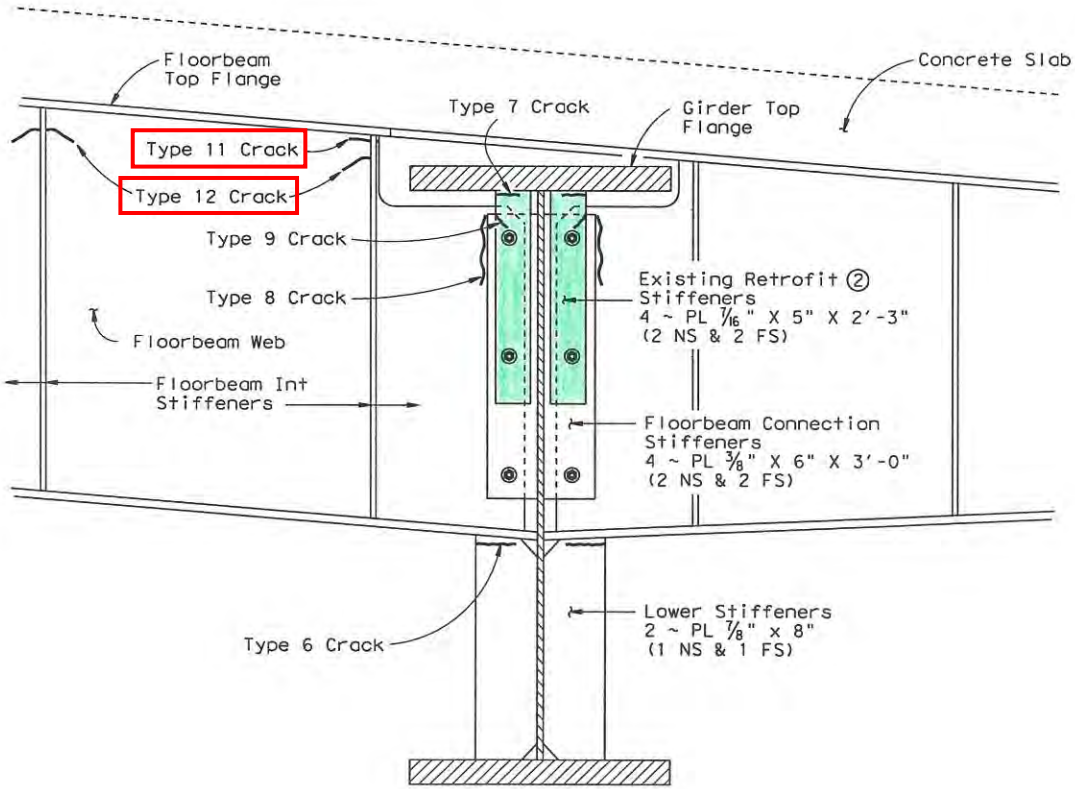

SECTION THRU GIRDER

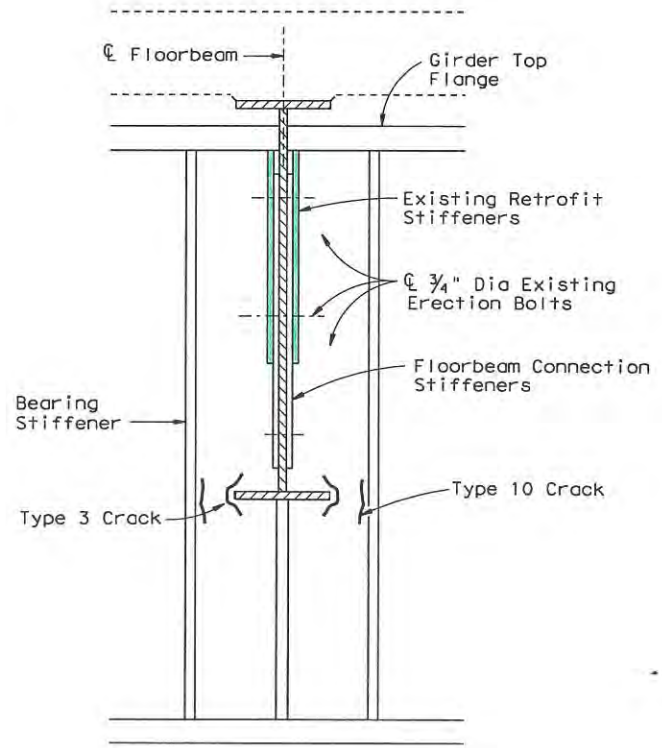

SECTION THRU FLOORBEAM

PREVIOUSLY REPAIRED FLOORBEAM-GIRDER CONNECTION

Type 7 Crack

(30 locations, 27 at columns)

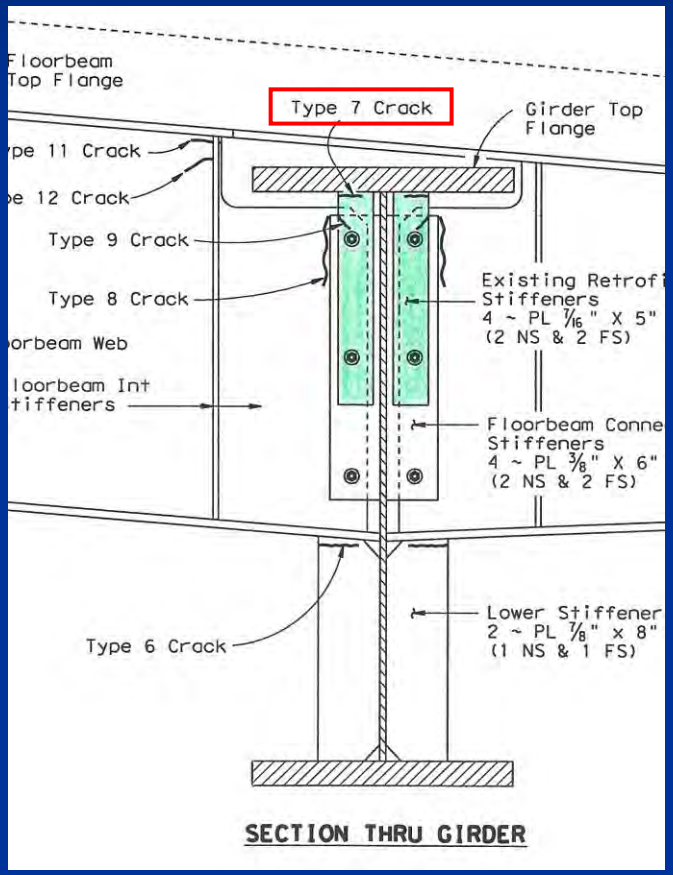

Type 8 Crack

(1 location only)

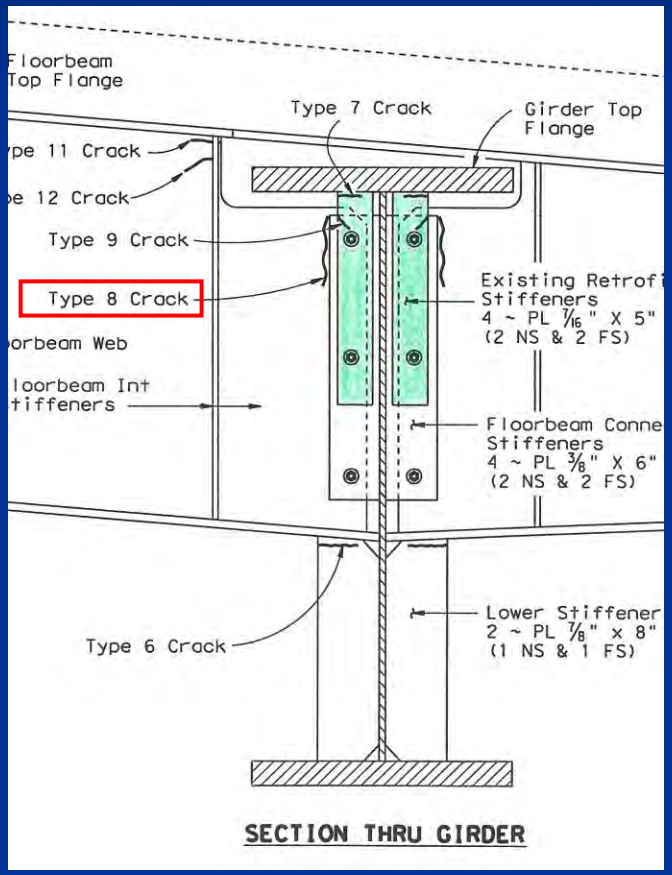

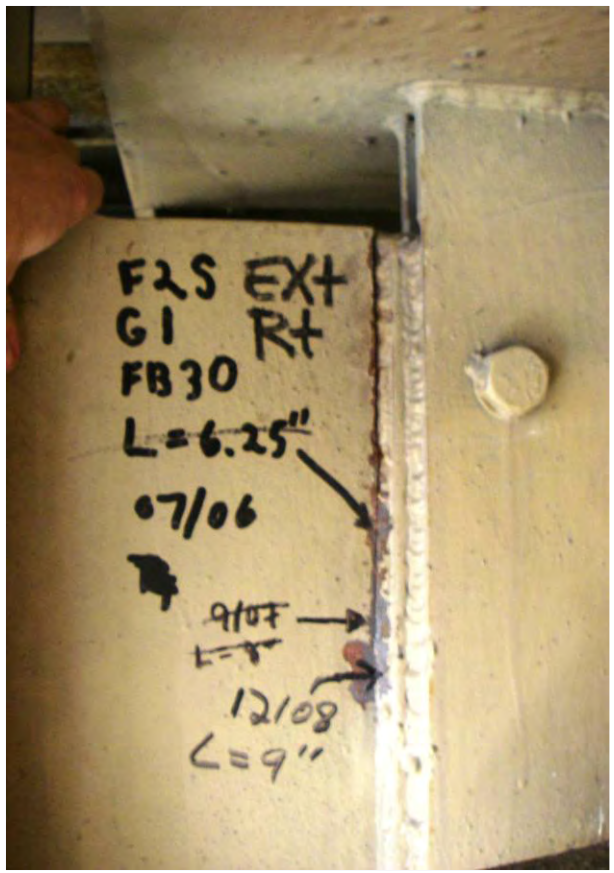

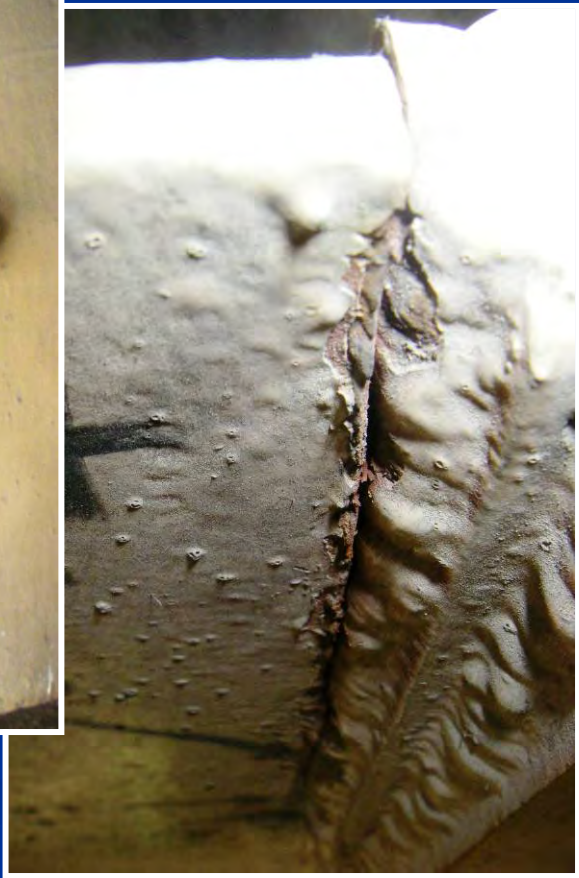

Type 9 Crack

(5 locations, 4 at unsymmetric columns)

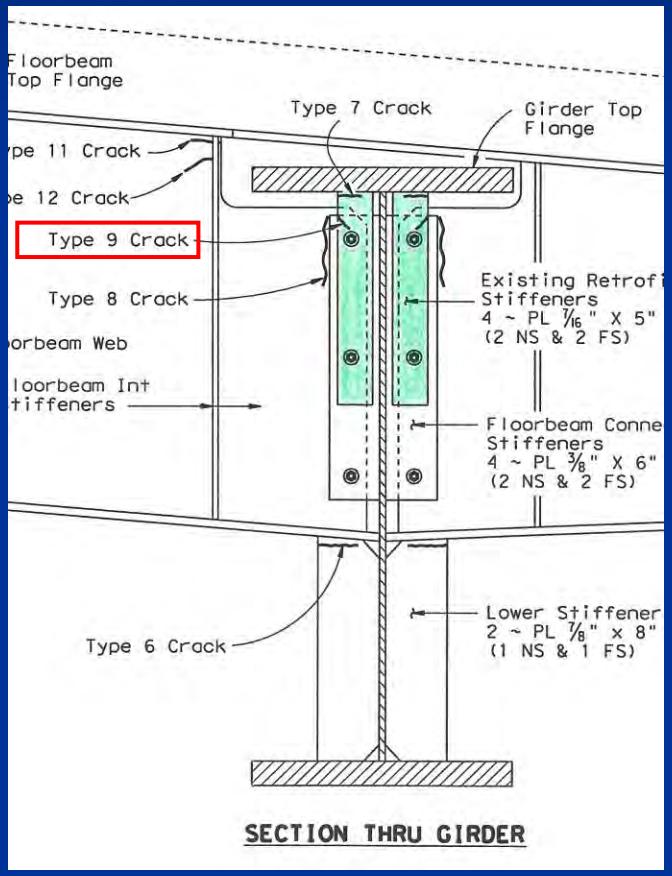

Type 3 & 10 Crack

(37 & 5 locations, mostly at columns)

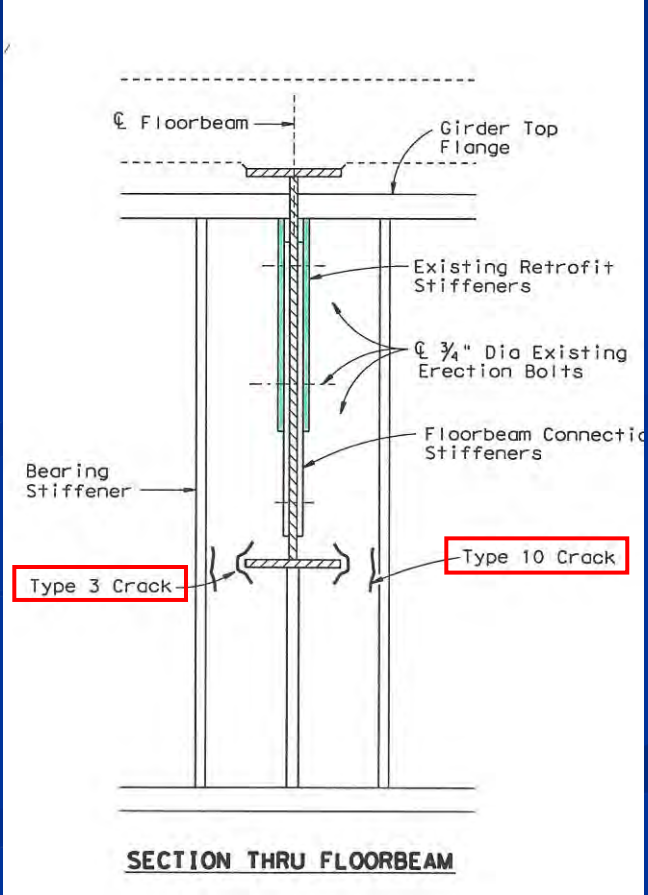

Field Testing

(July 7-8, 2008)

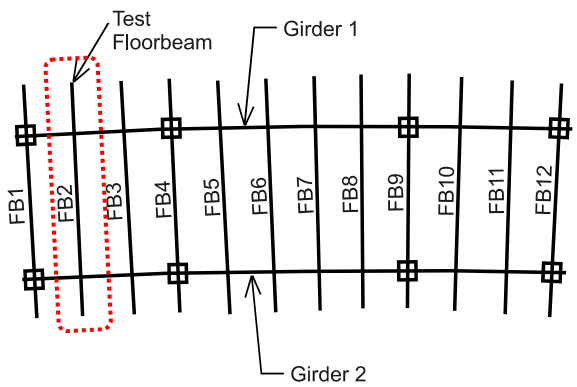

Unit F14N

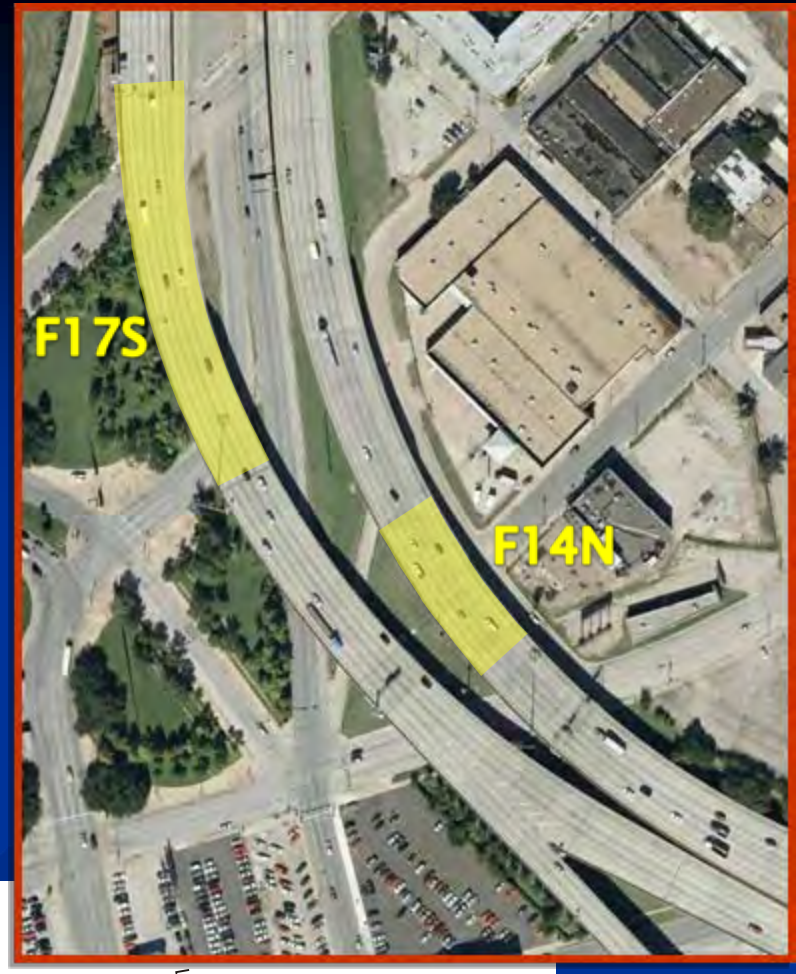

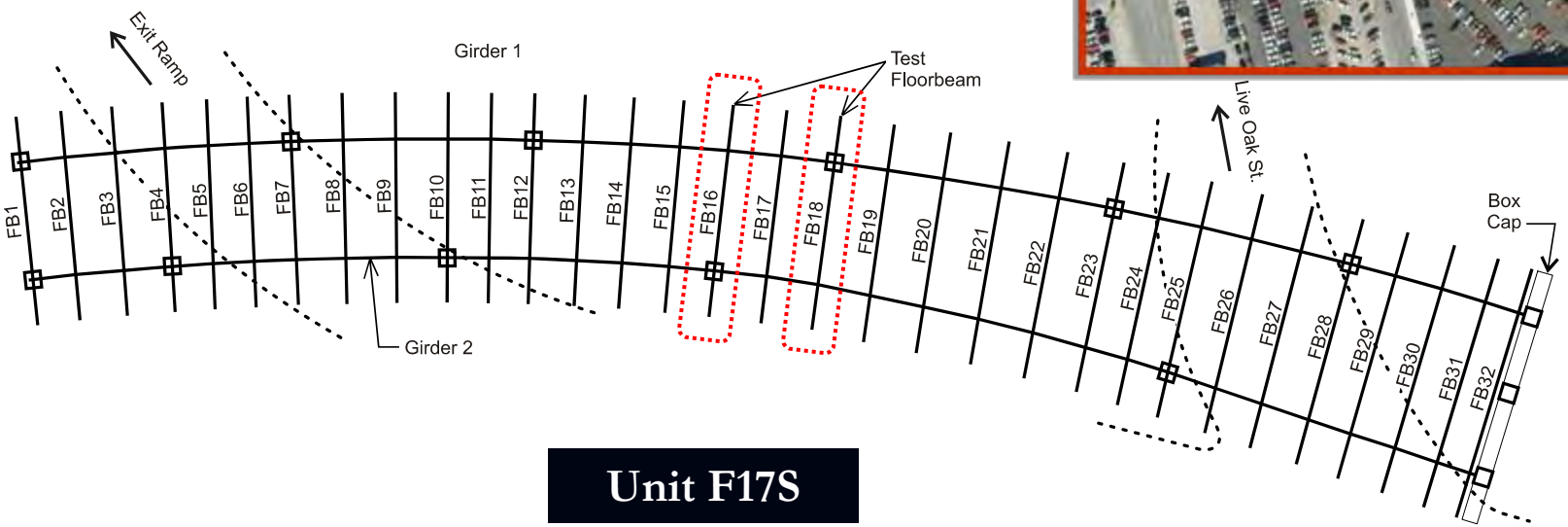

Unit F17S

Web Gap Gages

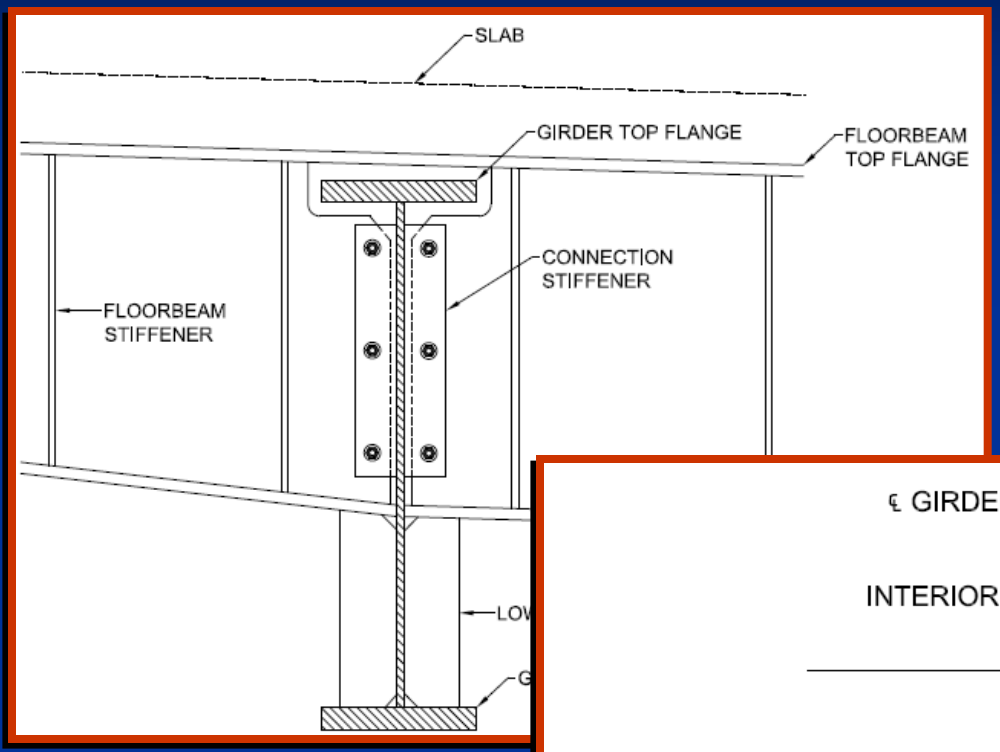

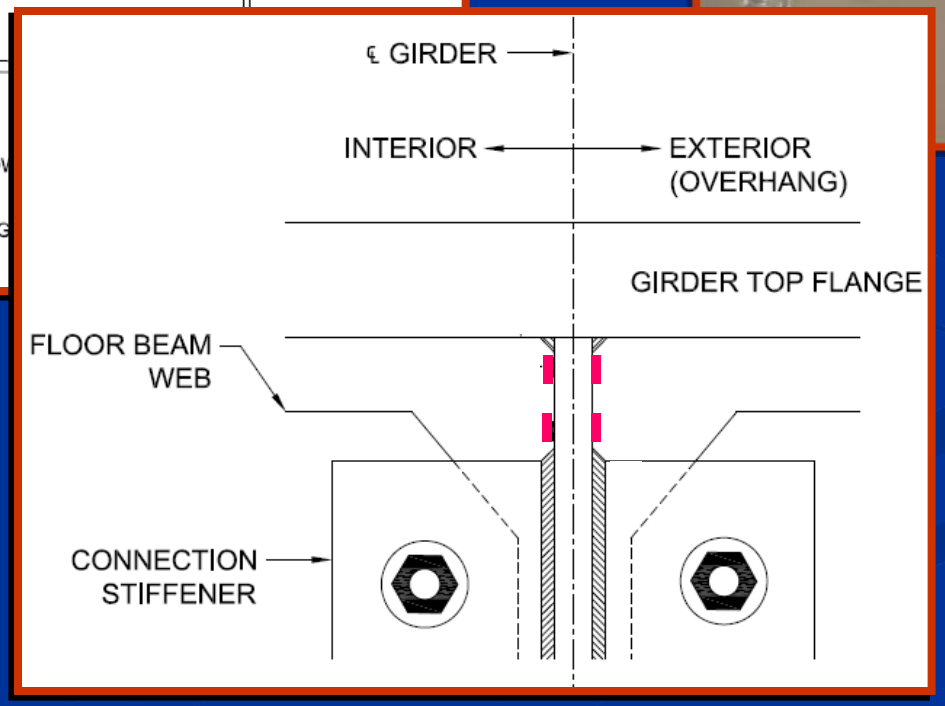

Retrofit Stiffener Gages

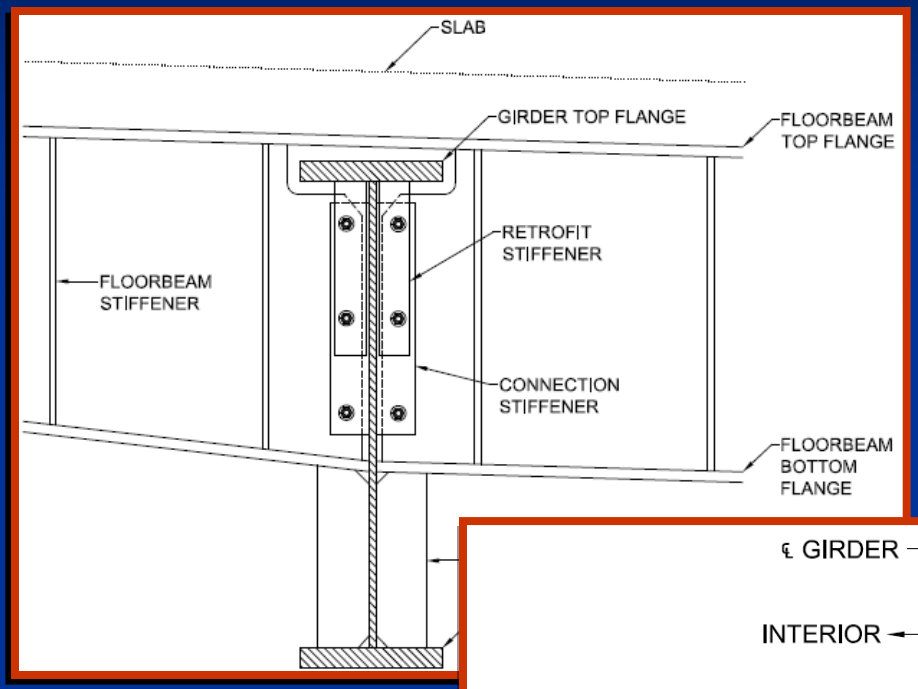

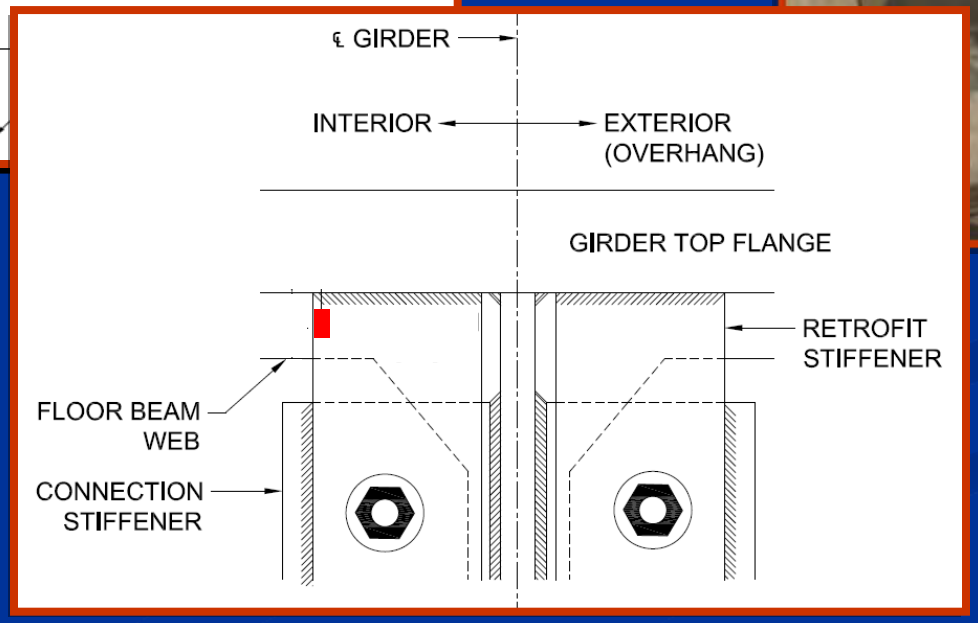

Bottom Flange Gages

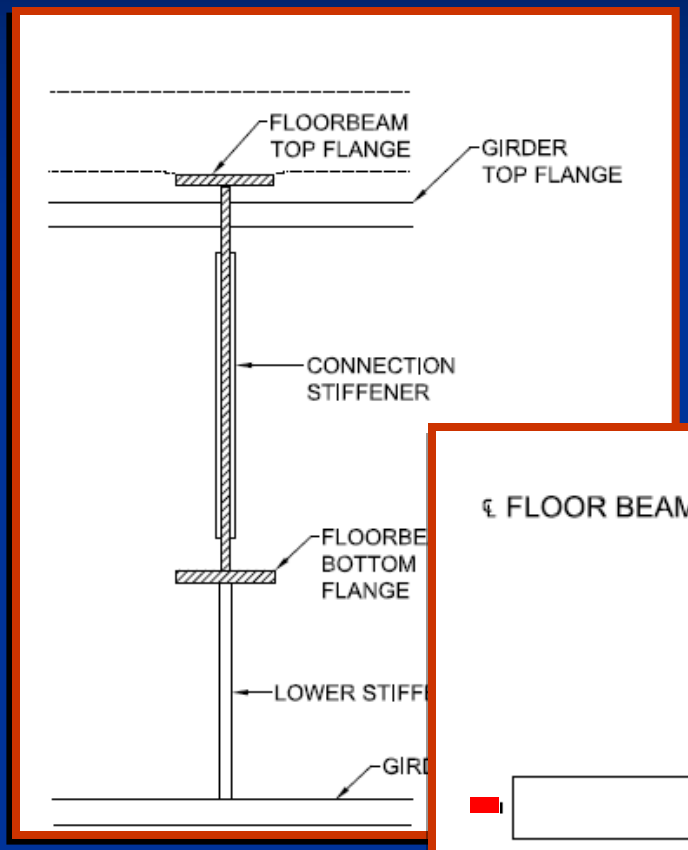

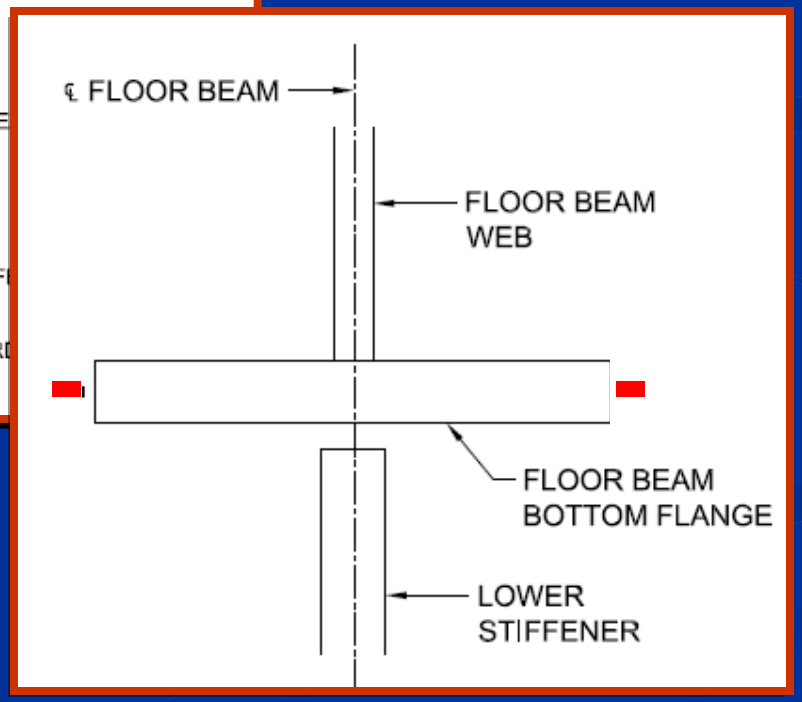

Controlled live load test

- 2 dump trucks
- 5 mph speed
- 10 sec stop at testing FB
- 6 test runs, 4 truck positions

Rainflow counting

- 1 week data collection

	F14N FB2	F17S FB16	F17S FB18
Top Flange Web Gap Gauge (C)	4.51 ksi 2 yr	–	–
Retrofit Stiffener Gauge (C’)	–	2.03 ksi 284 yr	1.83 ksi 579 yr
FB Bottom Flange Gauge (E’)	1.56 ksi 73 yr	1.89 ksi 29 yr	2.46 ksi 9 yr

Finite Element Modeling

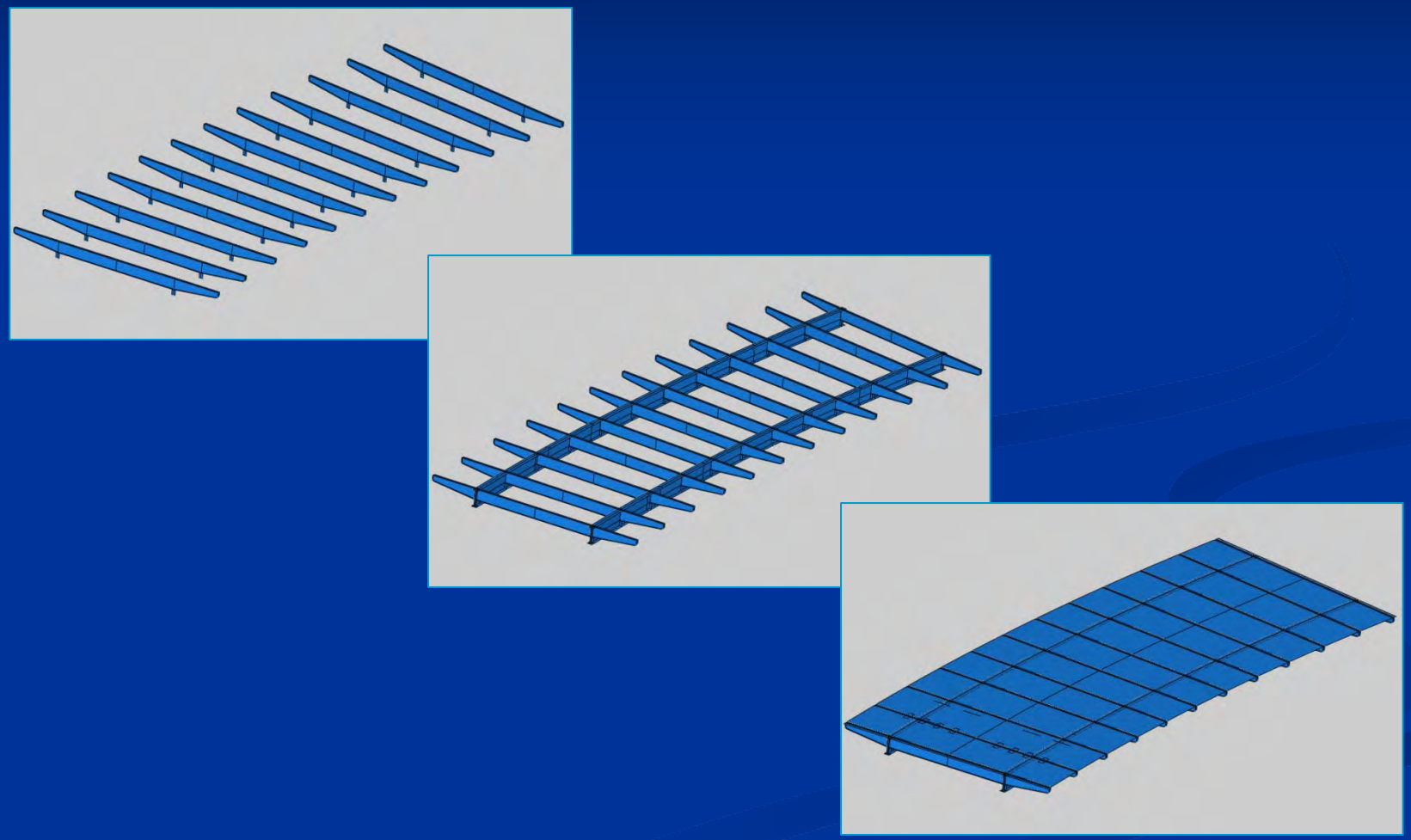

Finite Element Modeling

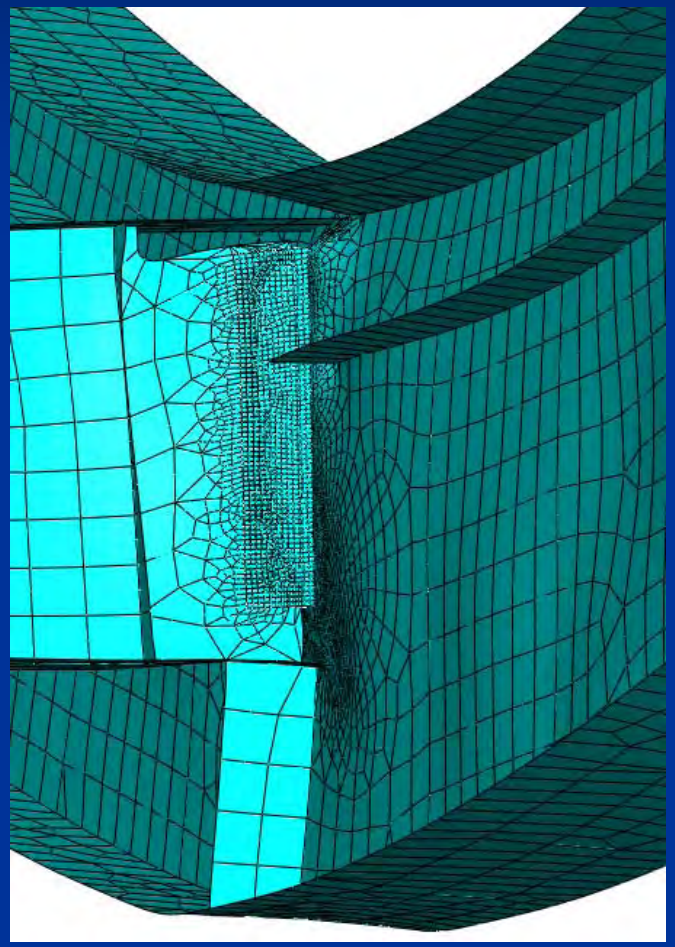

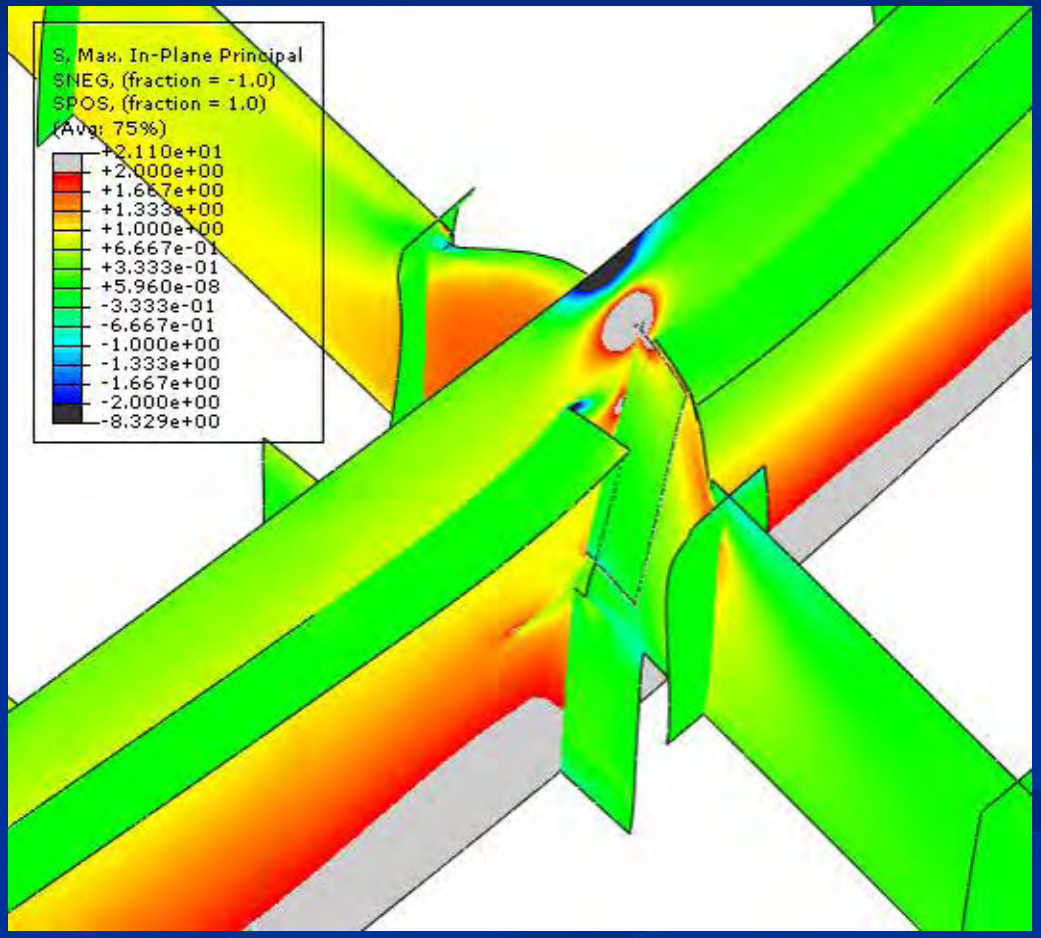

Repair Challenges

- Limited access at column connections
- Detail geometry varies at every single connections
- Field welding quality (overhead position, night time work, preheating and cooling, etc.)
- Traffic control – 8 hr closure 9pm-5am weekdays only, including 3 hr barricade setup and removal

Repair Detail Development

- **Closing the web gaps**
  - Stiffening angles for top flange web gaps
  - Corbel plates for bearing stiffener web gaps

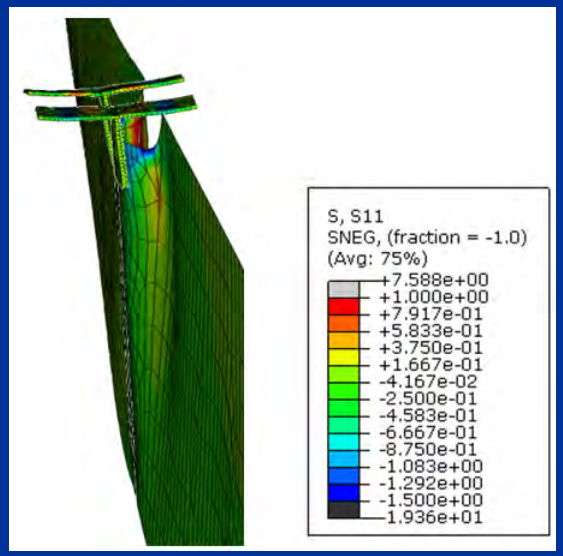

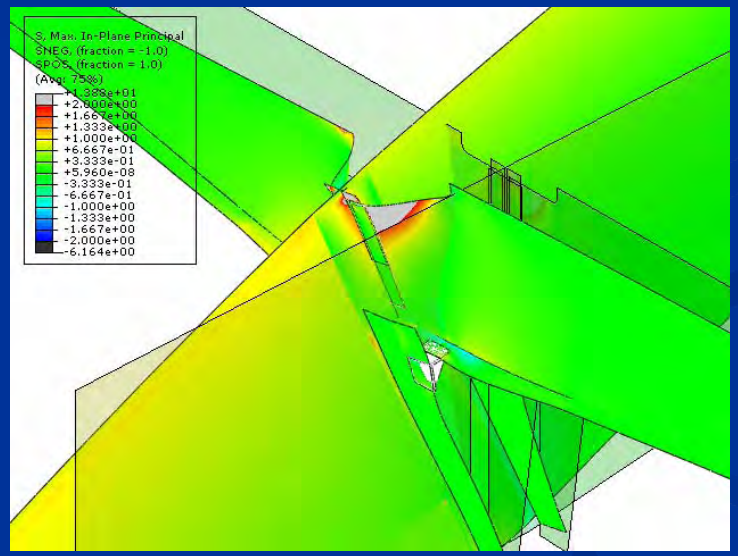

- **Limiting field welds**
  - Stud welding at top flange
  - High-strength bolting at bearing stiffener

Top Flange Web Gap Repair

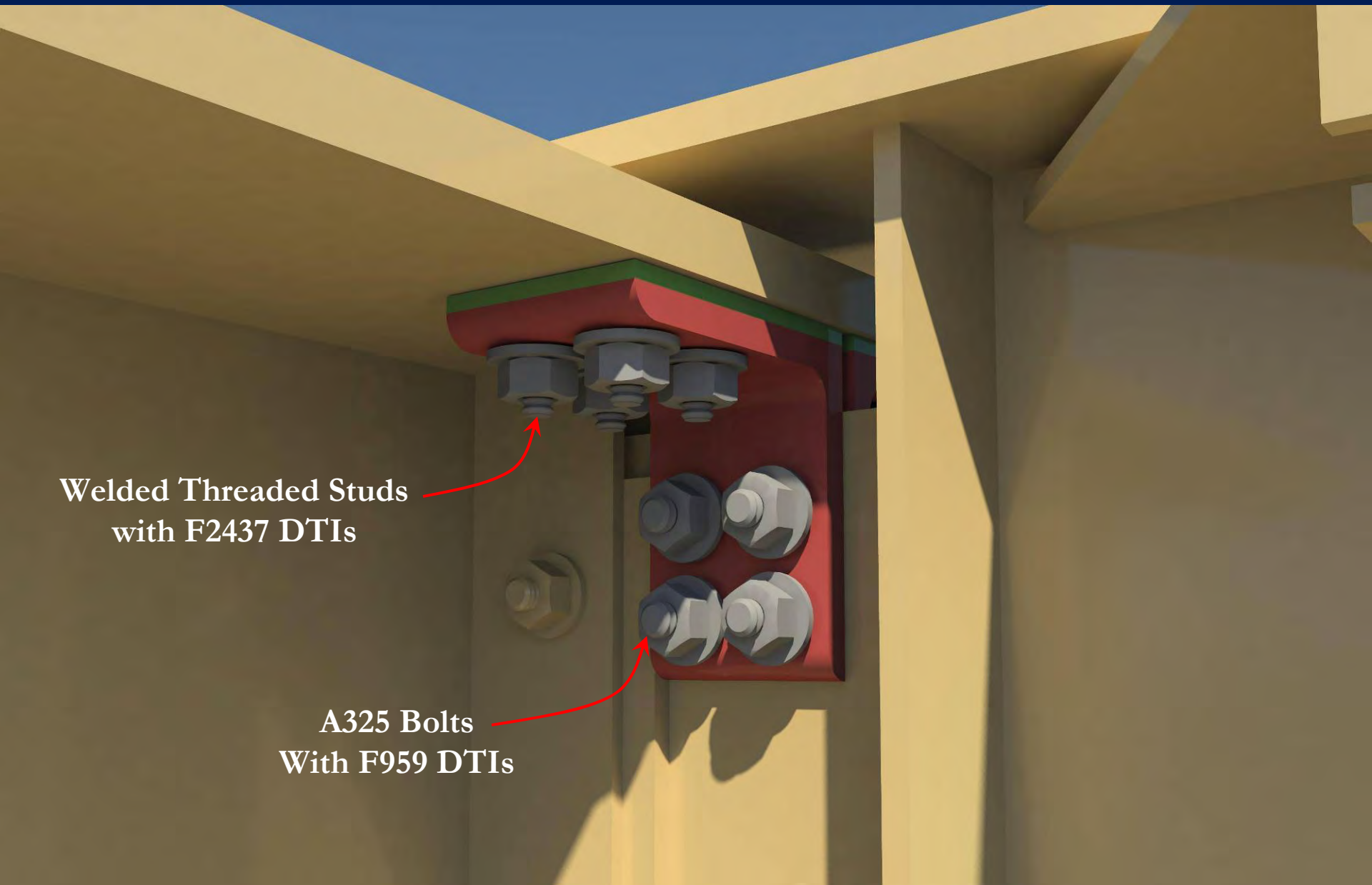

Top Flange Web Gap Repair

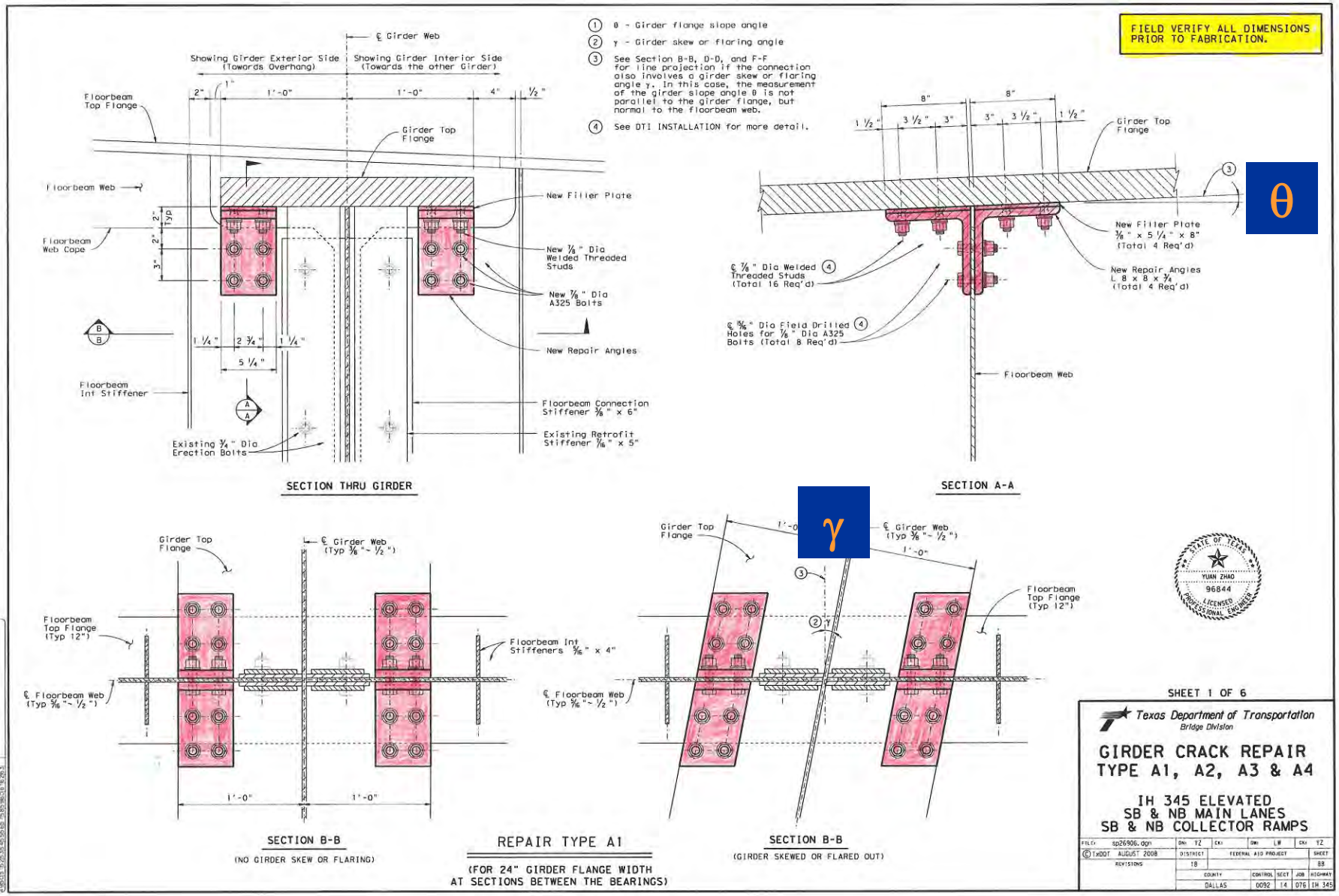

Stud Welding

Advantage

- Used in 2005 on a KSDOT bridge repair
- Automated, instantaneous arc welding (compared to stick welding)
- Hole drilling not needed (compared to bolting)

AWS D1.5 – Bend, Torque, Tension Tests

- Lab test during the design stage
- Contractor qualification test at the beginning of construction
- Production test at the beginning of each shift (only bend test required)

Lab Test

Bend Test

Tension Test

Torque Test

Acid Etching

TxDOT
Steel Lab

Lab Test

	Current	Minimum	Maximum
Axial Displacement	-1.6212 in	-2.0008 in	-1.6212 in
Axial Force	15889 lbf	16.074 lbf	41137 lbf

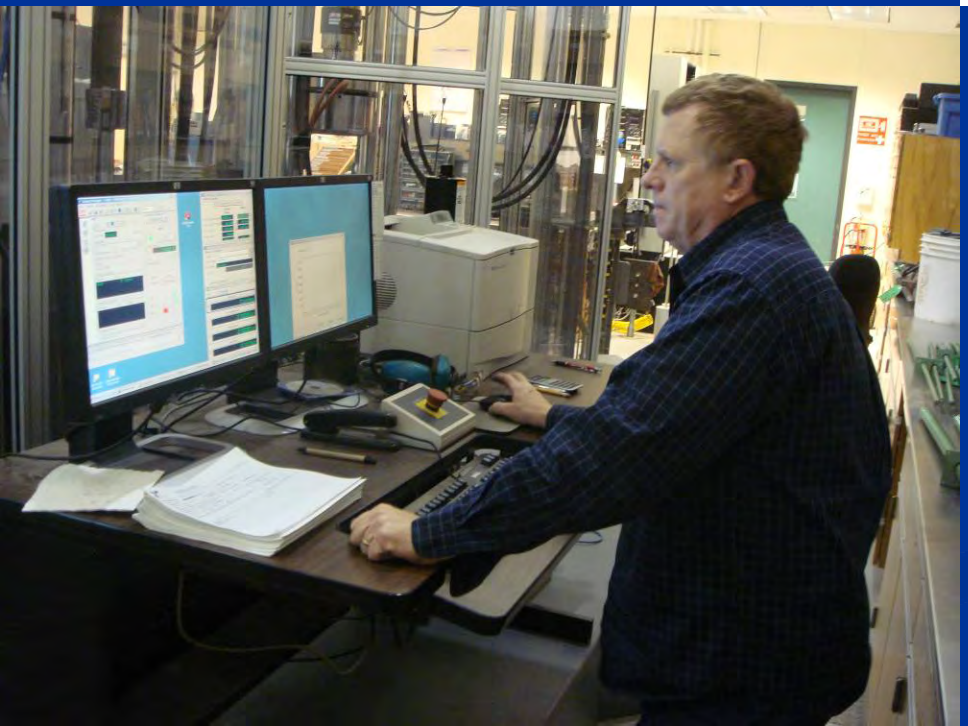

Tension-Displacement Curve

Qualification Test

Qualification Test

Qualification Test

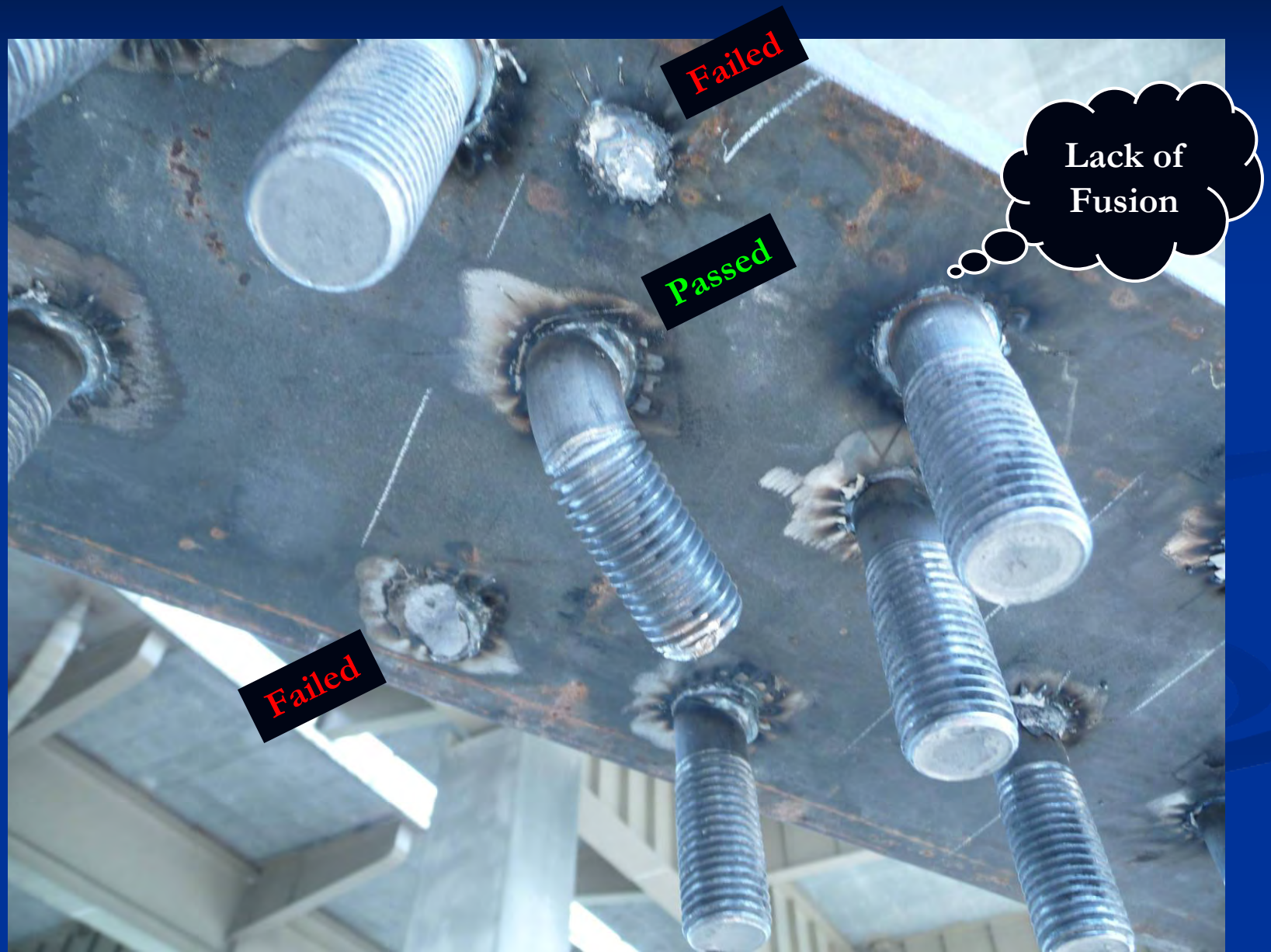

Makeup Qualification Test

Tension Test

Bend Test

Torque Test

Finished Repair

Bearing Stiffener Web Gap Repair

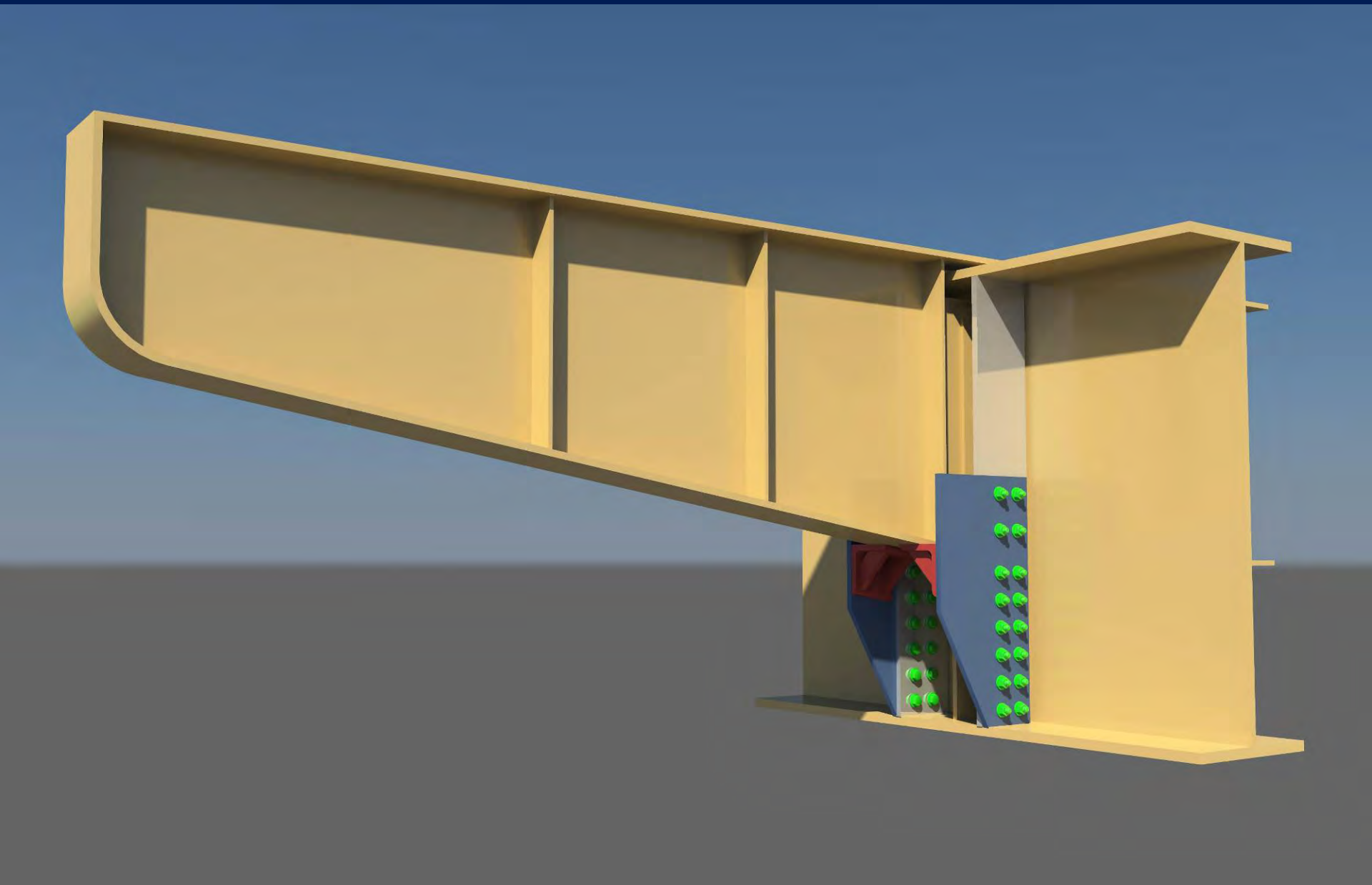

Bearing Stiffener Web Gap Repair

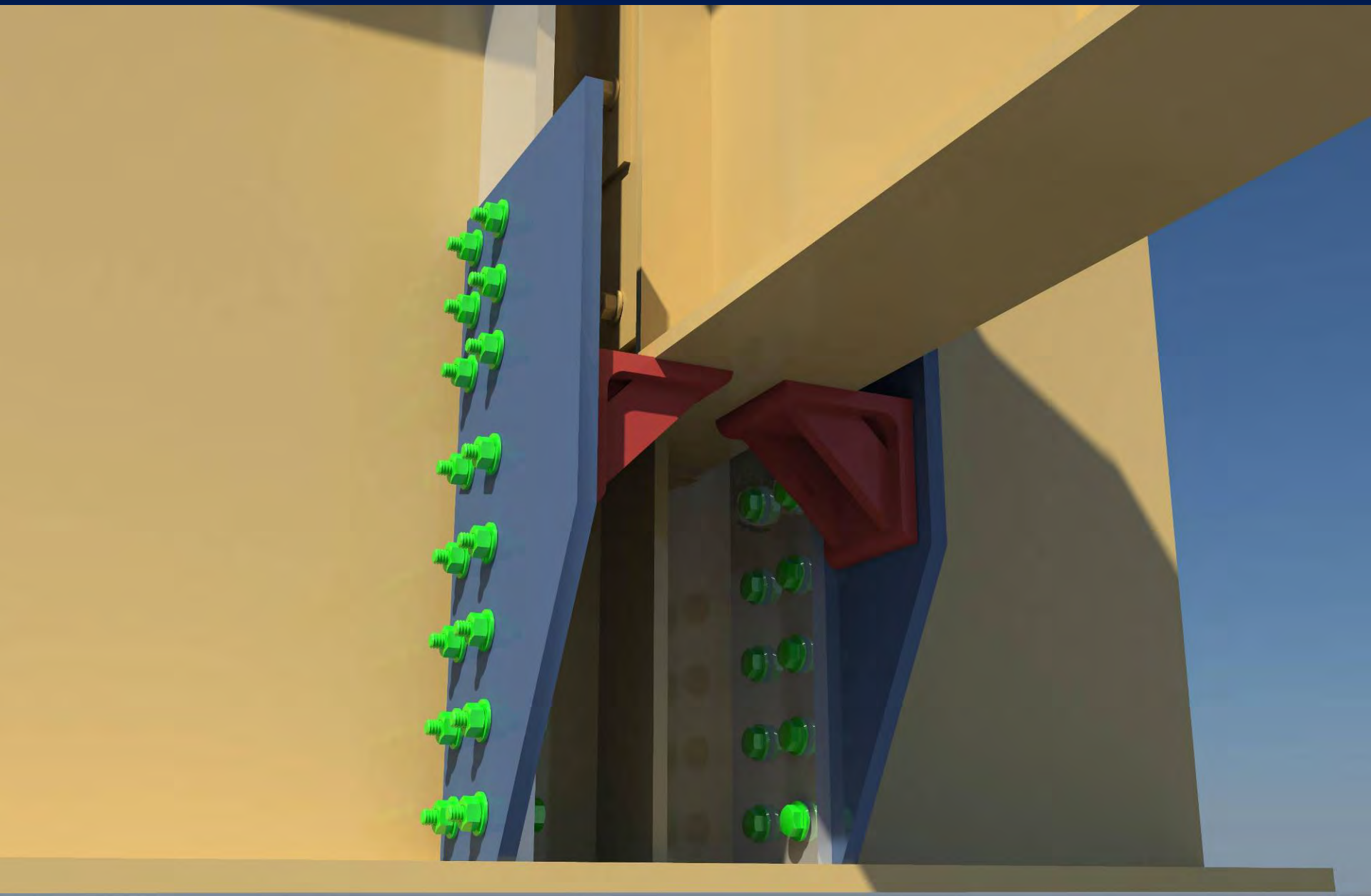

Bearing Stiffener Web Gap Repair

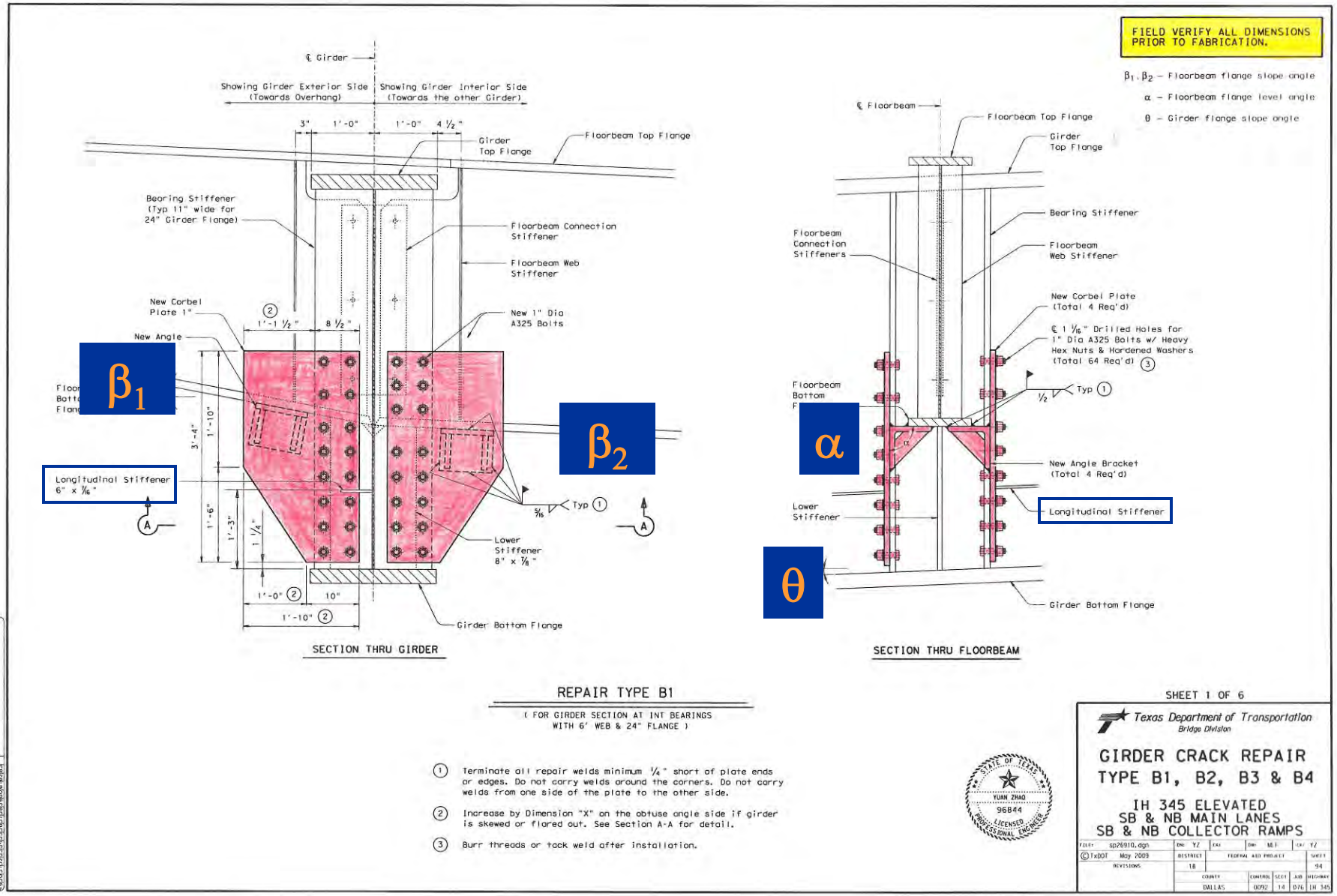

Bearing Stiffener Web Gap Repair

FIELD VERIFY ALL DIMENSIONS PRIOR TO FABRICATION.

γ - Girder skew or flaring angle

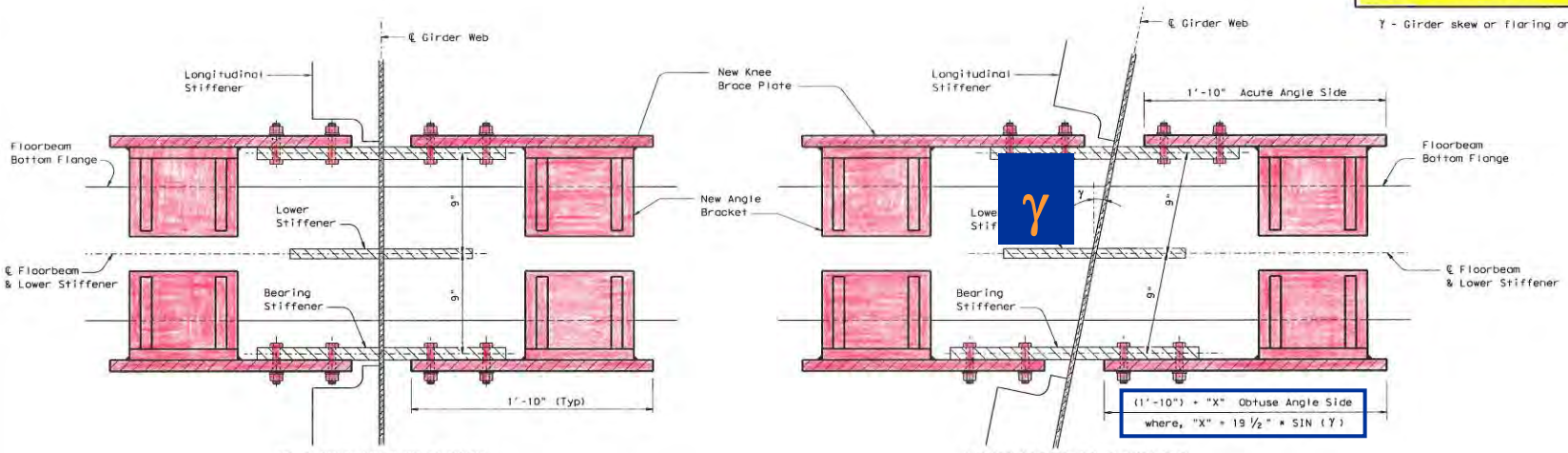

NO GIRDER SKEW OR FLARING

GIRDER SKEWED OR FLARED OUT

SECTION A-A

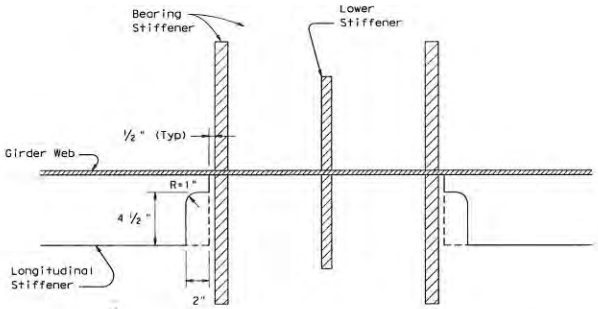

LONGITUDINAL STIFFENER CLIP DETAIL

Cut short the end of longitudinal stiffeners as shown wherever in conflict with the new corbel plates. Grind smooth the cut edges. Clean and paint after the repair.

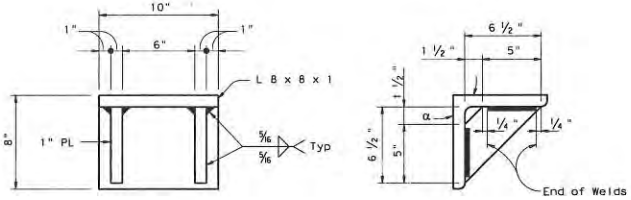

ANGLE BRACKET DETAIL

Heat treat the repair angle if the floorbeam flange slope angle α is not 90°. Heat only the outisde corner or inside fillet areas to reshape the angle. Keep the legs straigt. Do not bend or kink the legs.

STATE OF TEXAS
YUAN ZHAO
96844
LICENSED PROFESSIONAL ENGINEER

SHEET 5 OF 6

Texas Department of Transportation
Bridge Division

GIRDER CRACK REPAIR
TYPE B1, B2, B3 & B4

IH 345 ELEVATED
SB & NB MAIN LANES
SB & NB COLLECTOR RAMPS

FILE: sp26910.dgn	DN: YZ	CK:	DN: MLF	CK: YZ	
©TxDOT MAY 2009	DISTRICT	FEDERAL AID PROJECT			SHEET
REVISIONS	18				98
	COUNTY		CONTROL	SECT	JOB	HIGHWAY
	DALLAS		0092	14	076	IH 345

LEVELS DISPLAYED 1 2 3 4 5 6 7 8 9 0 1 2 3 4 5 6 7 8 9 0 1 2 3 4 5 6 7 8 9 0

Finished Repair

Crack Stop Holes

Crack Gouging & Rewelding

Summary

- Current repair
  - Local repair, at cracked locations only
  - 381 repairs at 166 locations
  - Contract amount $855,200
  - Finished by June 2010
- Future repair
  - Making superstructure composite with deck (TxDOT Research Projects 0-4124, 5-4124, 0-6719)
  - Adding columns to provide symmetric support
  - Local repair at every connection

Will the repair work out right ?

How long will the repair last ?

Time will tell !

TxDOT Brdige Division
Inspection & Field Operation

TxDOT Dallas District
& Central Area Office

Acknowledgement

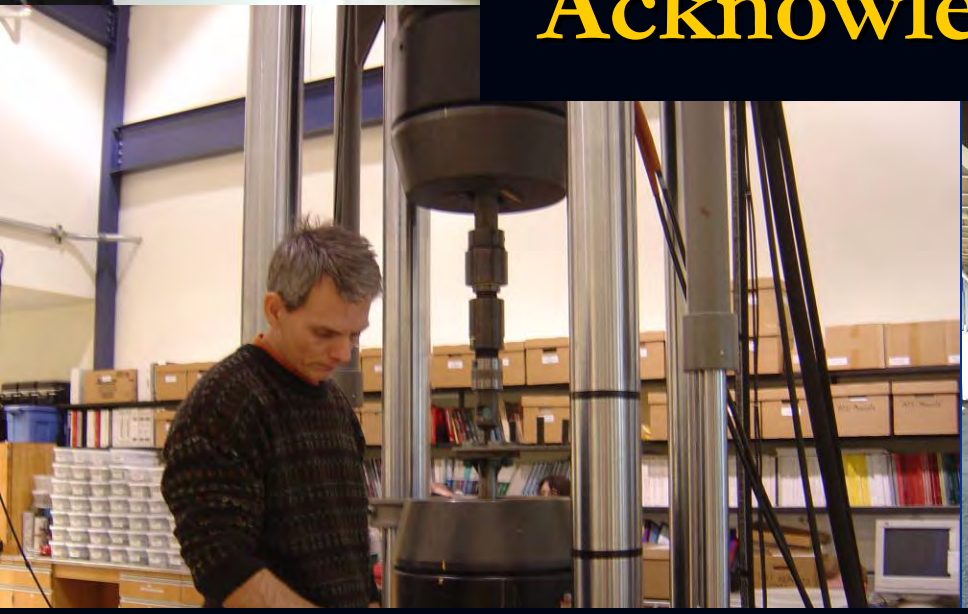

TxDOT Construction Division
Material & Pavements

UT-Austin Ferguson Structural
Engineering Laboratory

Acknowledgement

- Contractor – SCR Construction Co., Inc.
- Steel Erector – Erwin Steel Works, LLC

Thank you !
Any Questions ?