# DETAILING CHANGES

TxDOT Bridge Presentations Webinar

John Holt, P.E.

July 16, 2014

# Table of Contents


| | | |
|---|---|---|
| 1 | Detailing Council, BRG | 3 |
| 2 | General Notes and Notes | 4-7 |
| 3 | Sections, Views, Details and Bar Spacing | 8-12 |
| 4 | Foundation Layouts | 13-14 |
| 5 | Beam Layouts | 15-16 |
| 6 | Cement Stabilized Abutment Backfill (CSAB) | 17-21 |
| 7 | New Column Spiral | 22-27 |

# Detailing Council

Clear and concise bridge plans are the goal of the Bridge Division. Because plans are prepared by multiple groups of engineers and CAD technicians, we decided to create a council of senior staff members to reach consensus and uniformity on plan detailing practices. The council meets bimonthly to discuss methods to ensure clarity and consistency in plan preparation.

Constant communication is the key.

The outcome of the first two Detailing Council meetings are presented.

# General Notes

- Design Specification reference in the General Notes:
  - "Designed according to AASHTO LRFD Bridge Design Specifications, 6th Edition (2012)"
    - Wording is based on historical method of defining specifications used to design the bridge
    - Reason for the note is to help future analysis in the event the Bridge is to be widened, or repaired
    - Standard drawings will leave out the specific LRFD edition

*GENERAL NOTES:*

*Designed according to AASHTO LRFD Bridge Design Specifications, 6th Edition (2012)*
*See Shear Key Details Standard Sheet, IGSK for all shear key details and notes.*

# Notes

- When using circle number notes
  - Notes should be unique and sequential on a sheet
- When more then one sheet is in the series (Sheet 1 of X)
  - Number notes should coincide through sheets, be unique and sequential

# Single Sheet

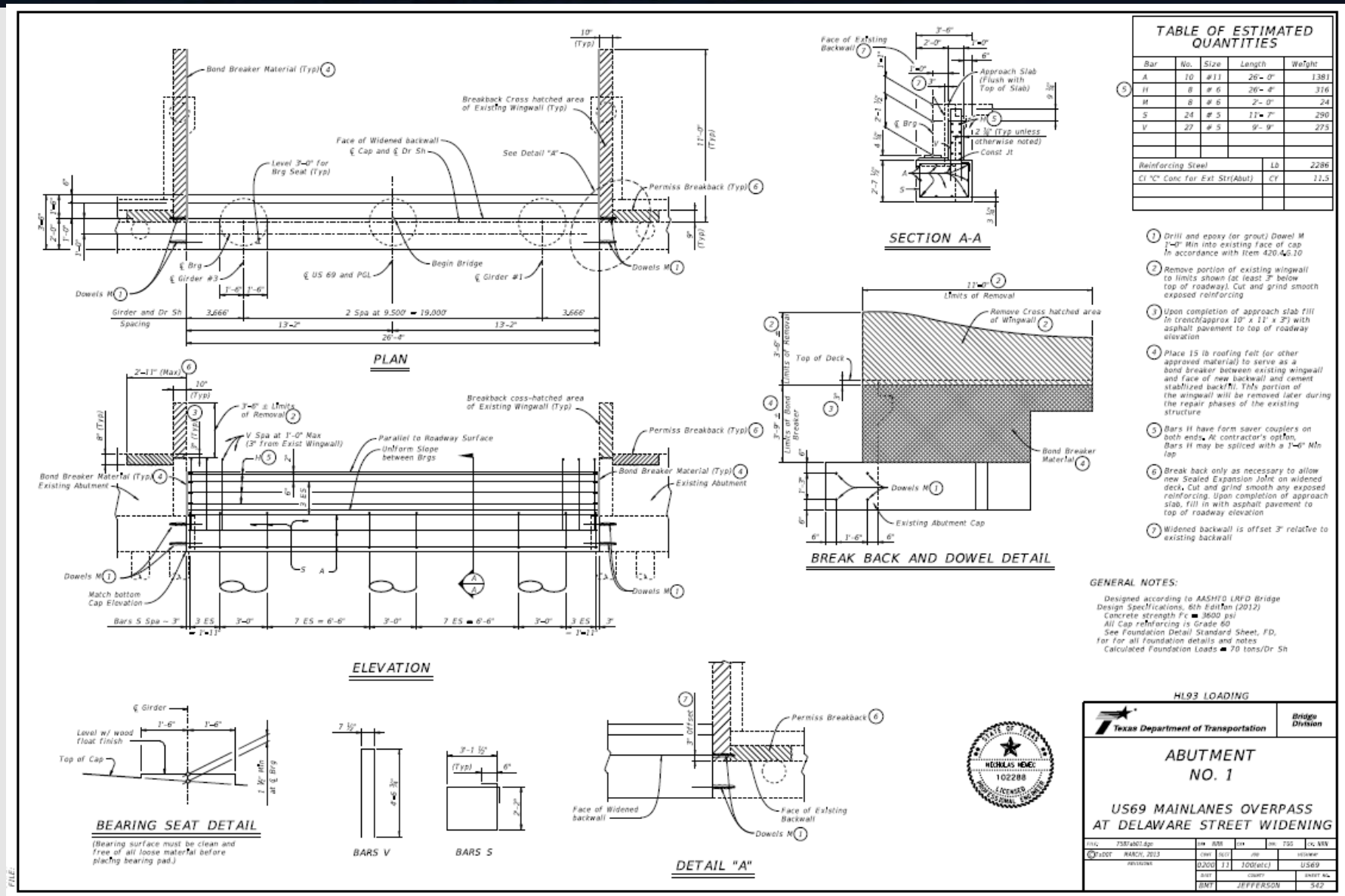

# Series of sheets

(1) 1'-4" Max Spa, Adust to miss tendons and Trim to maintain 2"± End Cover

(2) Cut inside leg as needed to avoid ducts, these two layers only.

(3) Shift bars toward inside web to allow for curving ducts. ½" Min cover

(4) Mechanical Couplers in accordance with the current Special Provision to Item 440, "Reinforcing Steel". No Coupler in exterior face of exterior beams.

(5) See HLMR Disc Bearing Sheet

HL93 LOADING SHEET 1 OF 2

Texas Department of Transportation — Bridge Division

PRECAST U-GIRDER EXPANSION SECTION

OLD BRAZOS RIVER BRIDGE

| FILE: 7492mi03.dgn | DN: DVL | CK: | DW: AMS | CK: DVL |
|---|---|---|---|---|
| ©TxDOT FEBRUARY 2014 | CONT | SECT | JOB | HIGHWAY |
| REVISIONS | 0587 | 01 | 060 | FM 1495 |
| | DIST | COUNTY | | SHEET NO. |
| | HOU | BRAZORIA | | |

(2) Cut inside leg as needed to avoid ducts, these two layers only.

(3) Shift bars toward inside web to allow for curving ducts. ½" Min cover

(6) Four E701's for Exterior Girders Provided eight bars for Interior Girders.

GENERAL NOTES:

Cover dimensions are clear dimensions.
Reinforcing bar dimensions shown are out-to-out of bar.
See Access Hatch Sheet for details not shown.

MATERIAL NOTES:

Provide Grade 60 reinforcing steel
Provide Class H concrete

HL93 LOADING SHEET 2 OF 2

Texas Department of Transportation — Bridge Division

PRECAST U-GIRDER EXPANSION SECTION

OLD BRAZOS RIVER BRIDGE

| FILE: 7492mi03.dgn | DN: DVL | CK: | DW: AMS | CK: DVL |
|---|---|---|---|---|
| ©TxDOT FEBRUARY 2014 | CONT | SECT | JOB | HIGHWAY |
| REVISIONS | 0587 | 01 | 060 | FM 1495 |
| | DIST | COUNTY | | SHEET NO. |
| | HOU | BRAZORIA | | |

# Sections, Views, and Details

- Sections
  - A cut through the object
  - Use the MicroStation Section Symbol and use letters, e.g. Section A-A
- Views
  - Section indicator placed off the object looking at the object
  - Use the MicroStation Section Symbol and use letters, e.g. View A-A
- Details
  - Specific information
  - Name with letters, e.g. Detail A, Detail B, unless…
  - The title is self-explanatory, e.g. Bearing Seat Detail, End of Cap Detail, etc.

# MicroStation Section Symbol

- Tool inside MicroStation
  - Placed in 3 clicks and takes about 5 seconds
- Ability to be dynamic in 2-D
  - Can be linked to respective detail
    - You can toggle between the symbol and respective detail. Similarly with the title of the detail and the section symbol
- Automatically creates sections in 3-D
  - When placed in a 3-D drawing, software will automatically create a cut section at that location

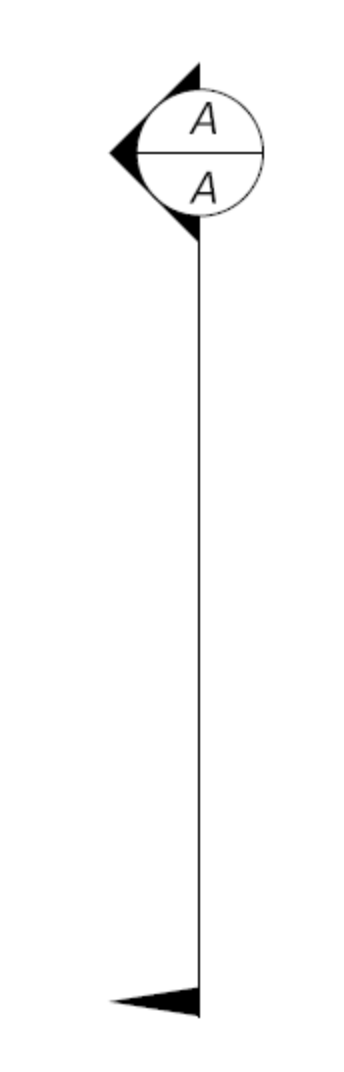

# Differentiate between sections, views and details

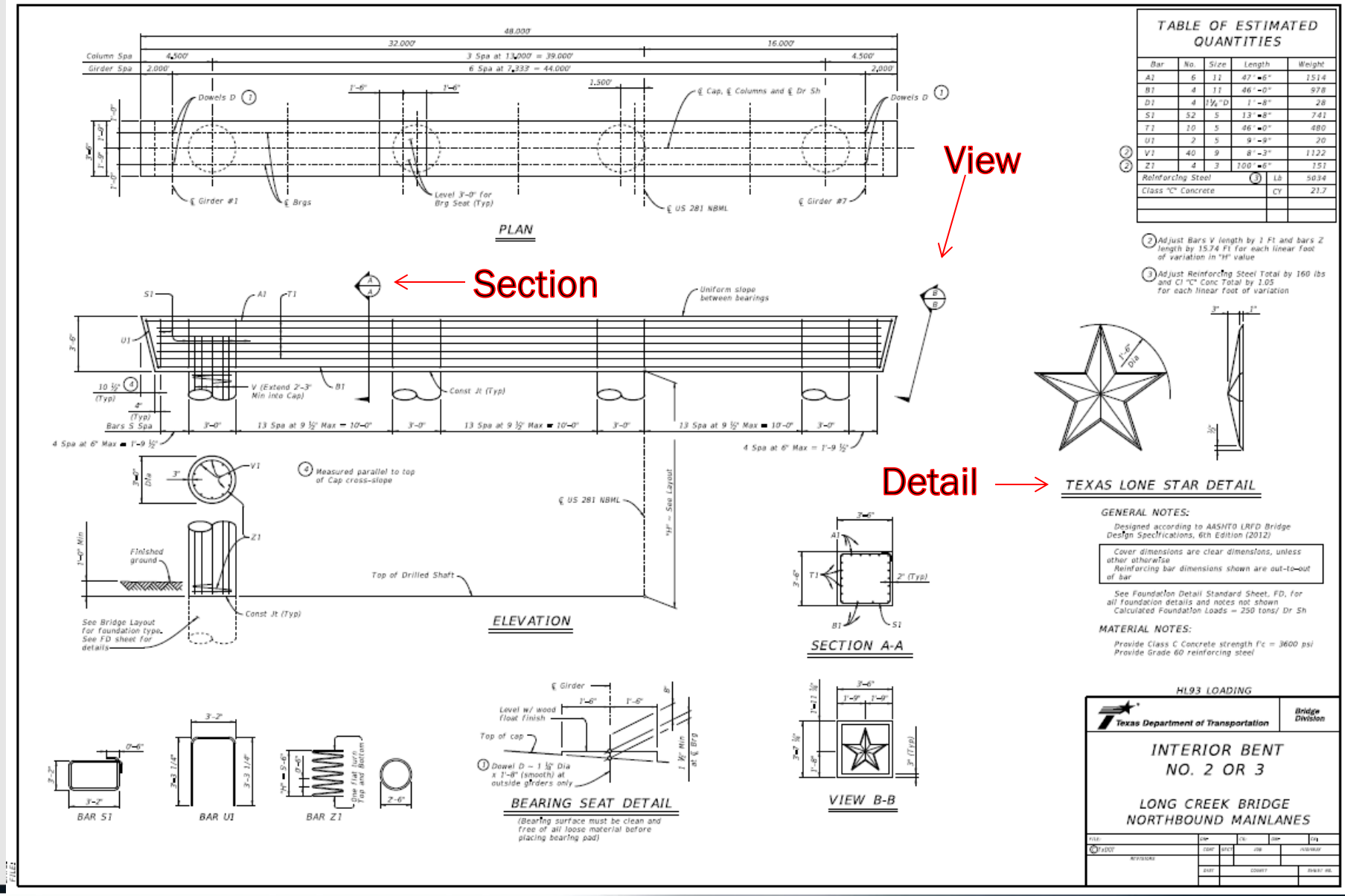

# Change in Bar Spacing call outs

- DO NOT use “Equal Spaces” or otherwise imply equal bar spacing in caps, columns, walls, etc.
- There is no reason for it to look pretty—it is reinforcing steel buried in concrete
- Odd dimensions for the spaces—for no reason
  - Example: 21 ES = 17’-3”; each space = 9.857”.
- MUCH easier for folks tying steel and for inspectors to verify
- Note the Maximum spacing to meet design needs. That’s all.

# Change in Bar Spacing call outs

- Examples

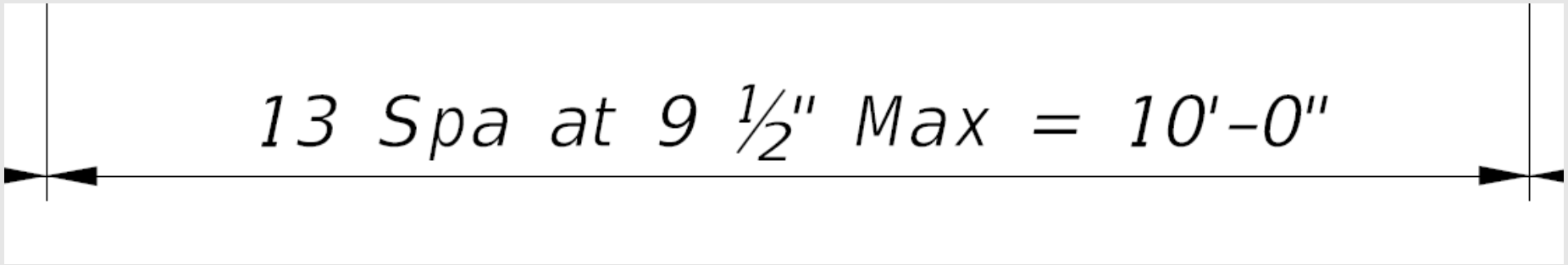


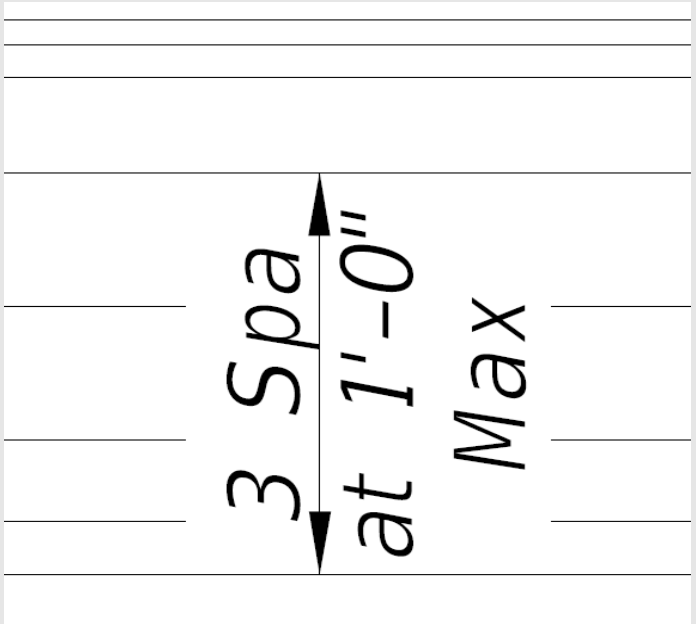


For designers: We recommend—but do not require—spacing reinforcement no finer than ½" increments. Whole inch spacing is probably better, especially over 6".

# Foundation Layouts

- Foundation Layout or Plan
  - It was recognized that a Foundation Layout or Plan is a good idea in some instances, such as:
    - Interchanges
    - Extensive underground utilities
    - Otherwise complicated foundation issues
  - In the early phase of bridge design, the Bridge Design section and Bridge Geotechnical section will coordinate and discuss whether a foundation layout is needed for a particular project.
  - What hasn't been completely determined is what should appear
    - Multiple examples used and most are unique

# Foundation Layout Example

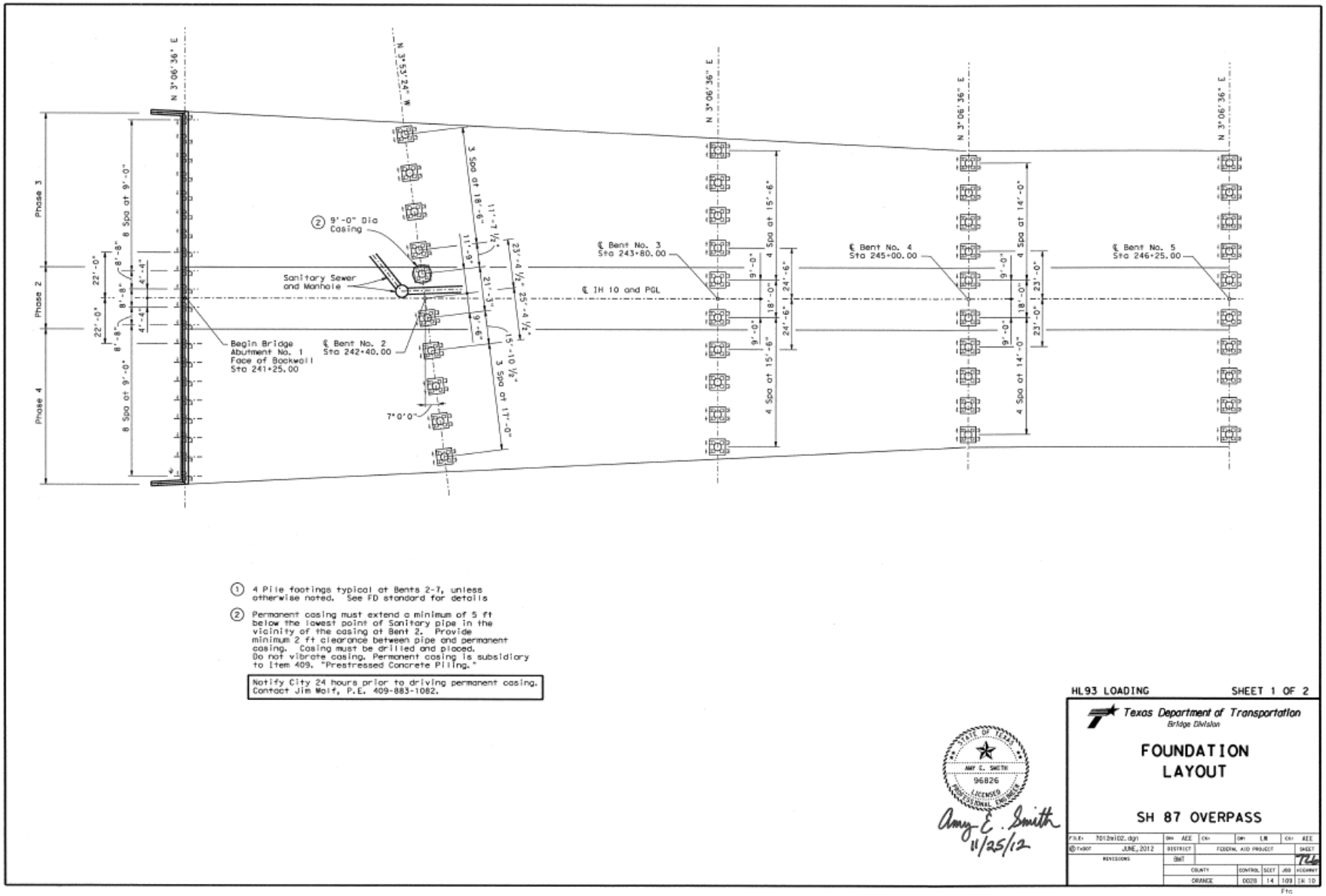


① 4 Pile footings typical at Bents 2-7, unless otherwise noted. See FD standard for details

② Permanent casing must extend a minimum of 5 ft below the lowest point of Sanitary pipe in the vicinity of the casing at Bent 2. Provide minimum 2 ft clearance between pipe and permanent casing. Casing must be drilled and placed. Do not vibrate casing. Permanent casing is subsidiary to Item 409, "Prestressed Concrete Piling."

Notify City 24 hours prior to driving permanent casing. Contact Jim Wolf, P.E. 409-883-1082.

HL93 LOADING — SHEET 1 OF 2

STATE OF TEXAS — AMY E. SMITH — 96826 — LICENSED PROFESSIONAL ENGINEER

Amy E. Smith 11/25/12

Texas Department of Transportation
Bridge Division

FOUNDATION LAYOUT

SH 87 OVERPASS

| FILE: 7012w102.dgn | DN: AEE | CK: | DW: LM | CK: AEE |
|---|---|---|---|---|
| ©TxDOT JUNE, 2012 | DISTRICT | FEDERAL AID PROJECT | | SHEET |
| REVISIONS | BMT | | | 7146 |
| | COUNTY | CONTROL | SECT | JOB | HIGHWAY |
| | ORANGE | 0028 | 14 | 103 | IH 10 |

# Beam Layout or Framing Plan

- To be used on all projects, regardless of simplicity of the bridge (Bridges built with standard drawings are exempt)
- Should include
  - Bent Report
  - Beam Report
    - Complete with Beam Slope
      - »Used by Beam and Bearing Pad manufacturer

Note: Both the Bent Report and Beam Report are extracted from the Bridge Geometry System (BGS)

# Beam Layout Example

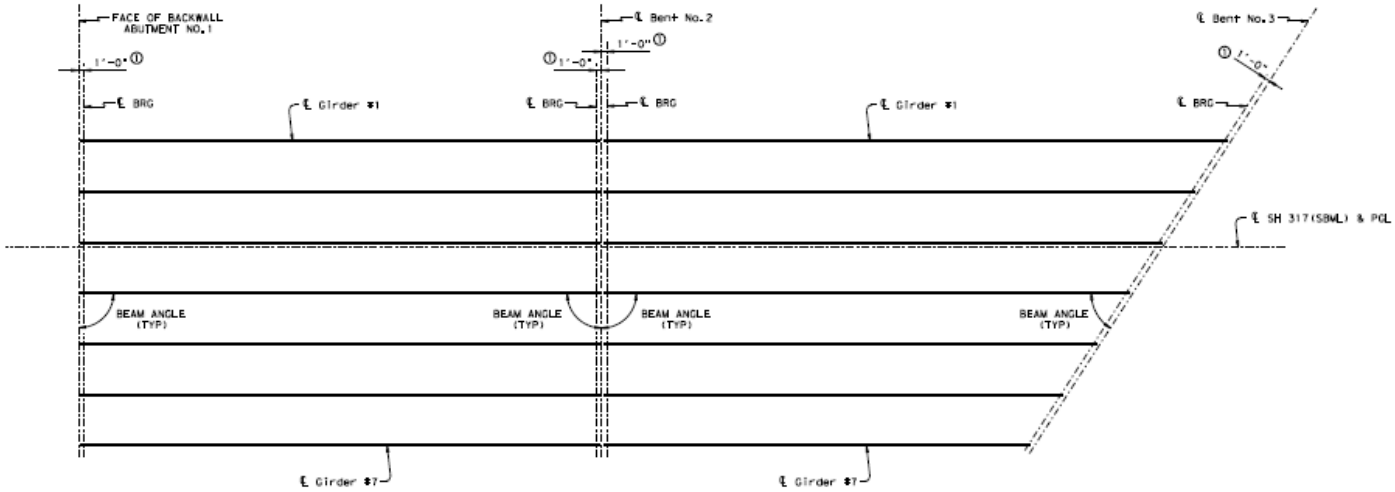


SPAN 1
(TX54 GIRDERS)

SPAN 2
(TX54 GIRDERS)

Beam Slope

BENT REPORT

ABUT NO. 1 (S 73 18 38.53 E)
DISTANCE BETWEEN STATION LINE AND BEAM 1 15.000 L

| | | BEAM SPAC. (C.L. BENT) | BEAM ANGLE D | M | S |
|---|---|---|---|---|---|
| SPAN 1 | BEAM 1 | 0.000 | 90 | 0 | 0 |
| | BEAM 2 | 7.333 | 90 | 0 | 0 |
| | BEAM 3 | 7.333 | 90 | 0 | 0 |
| | BEAM 4 | 7.333 | 90 | 0 | 0 |
| | BEAM 5 | 7.333 | 90 | 0 | 0 |
| | BEAM 6 | 7.333 | 90 | 0 | 0 |
| | BEAM 7 | 7.333 | 90 | 0 | 0 |
| | TOTAL | 44.000 | | | |

BENT NO. 2 (S 73 18 38.53 E)
DISTANCE BETWEEN STATION LINE AND BEAM 1 15.000 L

| | | BEAM SPAC. (C.L. BENT) | BEAM ANGLE D | M | S |
|---|---|---|---|---|---|
| SPAN 1 | BEAM 1 | 0.000 | 90 | 0 | 0 |
| | BEAM 2 | 7.333 | 90 | 0 | 0 |
| | BEAM 3 | 7.333 | 90 | 0 | 0 |
| | BEAM 4 | 7.333 | 90 | 0 | 0 |
| | BEAM 5 | 7.333 | 90 | 0 | 0 |
| | BEAM 6 | 7.333 | 90 | 0 | 0 |
| | BEAM 7 | 7.333 | 90 | 0 | 0 |
| | TOTAL | 44.000 | | | |

BENT REPORT

BENT NO. 2 (S 73 18 38.53 E)
DISTANCE BETWEEN STATION LINE AND BEAM 1 15.000 L

| | | BEAM SPAC. (C.L. BENT) | BEAM ANGLE D | M | S |
|---|---|---|---|---|---|
| SPAN 2 | BEAM 1 | 0.000 | 90 | 0 | 0 |
| | BEAM 2 | 7.333 | 90 | 0 | 0 |
| | BEAM 3 | 7.333 | 90 | 0 | 0 |
| | BEAM 4 | 7.333 | 90 | 0 | 0 |
| | BEAM 5 | 7.333 | 90 | 0 | 0 |
| | BEAM 6 | 7.333 | 90 | 0 | 0 |
| | BEAM 7 | 7.333 | 90 | 0 | 0 |
| | TOTAL | 44.000 | | | |

BENT NO. 3 (S 40 31 15.84 E)
DISTANCE BETWEEN STATION LINE AND BEAM 1 17.843 L

| | | BEAM SPAC. (C.L. BENT) | BEAM ANGLE D | M | S |
|---|---|---|---|---|---|
| SPAN 2 | BEAM 1 | 0.000 | 57 | 12 | 37 |
| | BEAM 2 | 8.723 | 57 | 12 | 37 |
| | BEAM 3 | 8.723 | 57 | 12 | 37 |
| | BEAM 4 | 8.723 | 57 | 12 | 37 |
| | BEAM 5 | 8.723 | 57 | 12 | 37 |
| | BEAM 6 | 8.723 | 57 | 12 | 37 |
| | BEAM 7 | 8.723 | 57 | 12 | 37 |
| | TOTAL | 52.340 | | | |

BEAM REPORT

BEAM REPORT, SPAN 1

| | HORIZONTAL DISTANCE C-C BENT | C-C BRG. | TRUE DISTANCE BOT. BM. FLG.② | BEAM SLOPE |
|---|---|---|---|---|
| BEAM 1 | 75.000 | 73.000 | 74.50 | -0.0014 |
| BEAM 2 | 75.000 | 73.000 | 74.50 | -0.0014 |
| BEAM 3 | 75.000 | 73.000 | 74.50 | -0.0014 |
| BEAM 4 | 75.000 | 73.000 | 74.50 | -0.0014 |
| BEAM 5 | 75.000 | 73.000 | 74.50 | -0.0014 |
| BEAM 6 | 75.000 | 73.000 | 74.50 | -0.0014 |
| BEAM 7 | 75.000 | 73.000 | 74.50 | -0.0014 |

BEAM REPORT, SPAN 2

| | HORIZONTAL DISTANCE C-C BENT | C-C BRG. | TRUE DISTANCE BOT. BM. FLG.② | BEAM SLOPE |
|---|---|---|---|---|
| BEAM 1 | 90.273 | 88.083 | 89.73 | -0.0003 |
| BEAM 2 | 85.549 | 83.359 | 85.00 | -0.0003 |
| BEAM 3 | 80.825 | 78.635 | 80.28 | -0.0003 |
| BEAM 4 | 76.101 | 73.911 | 75.55 | -0.0003 |
| BEAM 5 | 71.376 | 69.187 | 70.83 | -0.0003 |
| BEAM 6 | 66.652 | 64.463 | 66.10 | -0.0003 |
| BEAM 7 | 61.928 | 59.739 | 61.38 | -0.0003 |

CHECK PRINT
08-14-12
MFG

① SEE IGEB(MOD) STANDARD FOR ORIENTATION OF DIMENSION.
② GIRDER LENGTHS SHOWN ARE BOTTOM BEAM FLANGE LENGTHS WITH ADJUSTMENTS MADE FOR BEAM SLOPE.

HL93 LOADING

P.E. SEAL REQUIRED
PRELIMINARY
SUBJECT TO REVISION
This document is released for informational purposes under the authority of TARA ANN NETTEMEIER P.E. 99078 on 11/2012. It is not to be used for regulatory approval, permit, bidding, or construction purposes.

Texas Department of Transportation
Bridge Division

GIRDER LAYOUT

LEON RIVER BRIDGE
(SBML)

| FILE: 7496BL01.DGN | DN: TAR | CK: AAG | DW: | MFG | CK: TAR |
|---|---|---|---|---|---|
| ©TxDOT AUGUST 2012 | CONT | SECT | JOB | HIGHWAY | |
| REVISIONS | 0398 | 04 | 059 | SH 317 | |
| | DIST | | COUNTY | | SHEET NO. |
| | MAC | | BELL | | |

# Cement Stabilized Abutment Backfill

- Identify on Layout in much the same way an Approach Slab is identified
- Include Bid item on Estimated Quantities
- Include CSAB sheet in standards or District-supplied alternative

# CSAB called out on Layout

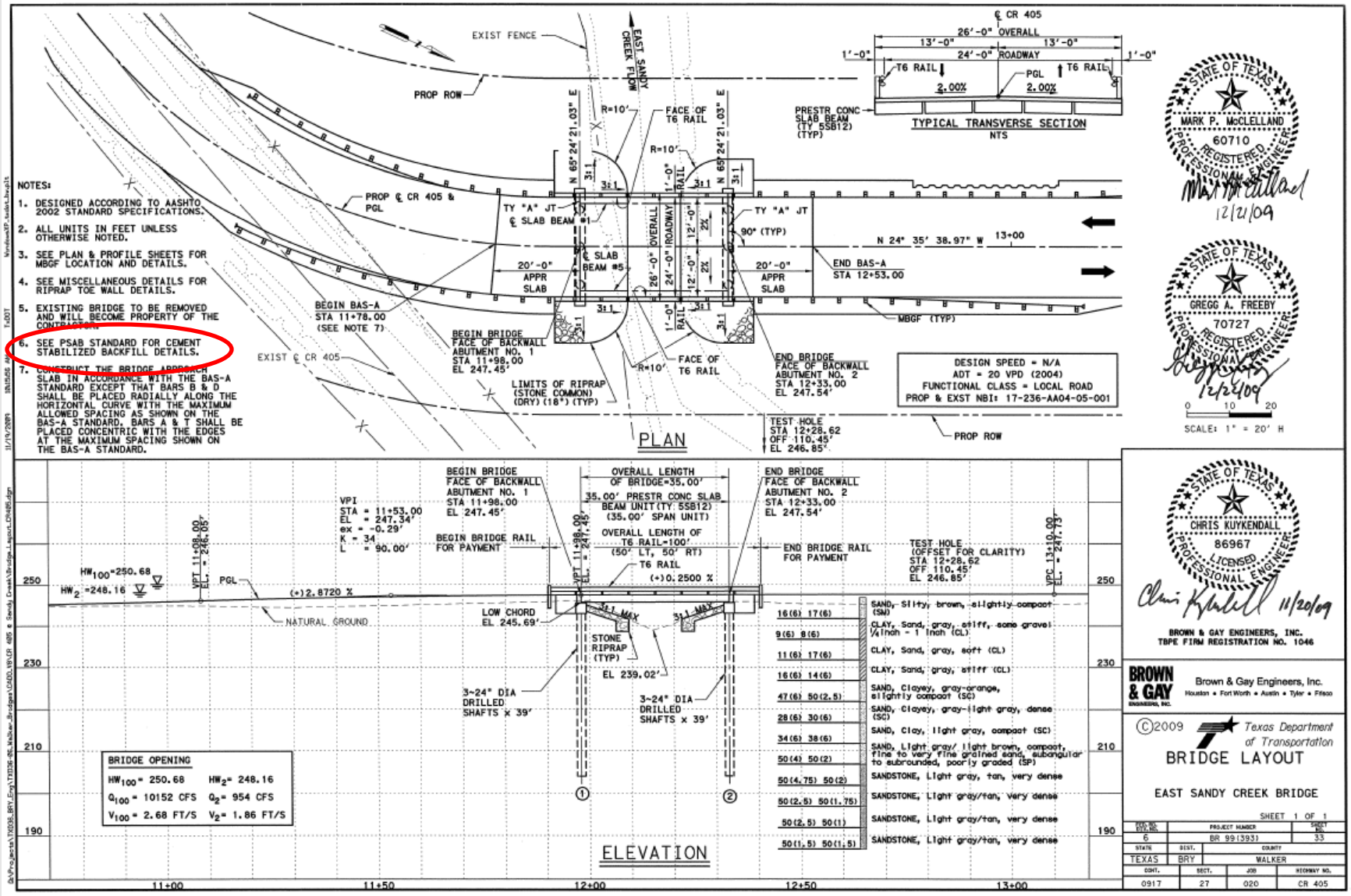

# Included on Estimated Quantities Sheet

## SUMMARY OF ESTIMATED QUANTITIES

| BID ITEM DESCRIPTION / BRIDGE ELEMENT | 0400-2005 CEM STABIL BKFL | 0416-2001 DR SHAFT (18 IN) | 0416-2004 DR SHAFT (36 IN) | 0420-2041 CL C CONC (ABUT) (HPC) | 0420-2042 CL C CONC (BENT) (HPC) | 0420-2256 CL S CONC (APPR SLAB) (HPC) | 0422-2003 REINF CONC SLAB (HPC) (CL S) | 0425-2096 PRESTR CONC BOX BEAM 5XB34 | 0425-2110 PRESTR CONC BOX BEAM 5XB34 (MOD) | 0442-2048 STRUCTURAL STEEL (MISC NON-BRIDGE) ② | 0450-2065 RAILING (T401) (MOD) | 0454-2005 ARMOR JOINT (WITH SEAL) ① | 0481-2008 PVC PIPE (SCH 40) (2IN) BENT | 0481-2009 PVC PIPE (SCH 40) (3IN) RAIL ③ | | | |
|---|---|---|---|---|---|---|---|---|---|---|---|---|---|---|---|---|---|
| | CY | LF | LF | CY | CY | CY | SF | LF | LF | LB | LF | LF | LF | LF | | | |
| 2 ~ ABUTMENTS | 96.4 | 1088 | 432 | 139.2 | | 65.4 | | | | | 320.0 | 72 | | 168 | | | |
| 1 ~ INTERIOR BENTS | | | 168 | | 41.2 | | | | | | | | 40 | | | | |
| 1 ~ 182.00' PRESTR CONC X-BEAM UNIT | | | | | | | 7280 | 543.00 | 362.00 | 30 | 364.0 | | | 364 | | | |
| TOTAL | 96.4 | 1088 | 600 | 139.2 | 41.2 | 65.4 | 7280 | 543.00 | 362.00 | 30 | 684.0 | 72 | 40 | 532 | | | |

① Quantity total based on 36 LF per joint location.

② Special BMCS.

③ Quantities are for Contractor's information only. See ILLUMINATION LAYOUT for details and quantities.

## BEARING SEAT ELEVATIONS

| | BEAM 1 LEFT | BEAM 1 RIGHT | BEAM 2 LEFT | BEAM 2 RIGHT | BEAM 3 LEFT | BEAM 3 RIGHT | BEAM 4 LEFT | BEAM 4 RIGHT | BEAM 5 LEFT | BEAM 5 RIGHT | DIST BETWN BRNG ELEVS ALONG CL BRNG (FT) |
|---|---|---|---|---|---|---|---|---|---|---|---|
| BENT 1 (FWD) | 2506.330 | 2506.210 | 2506.170 | 2506.050 | 2506.010 | 2505.890 | 2505.850 | 2505.730 | 2505.690 | 2505.570 | 6.0000 |
| BENT 2 (BK) | 2506.689 | 2506.569 | 2506.529 | 2506.409 | 2506.369 | 2506.249 | 2506.209 | 2506.089 | 2506.049 | 2505.929 | 6.0000 |
| BENT 2 (FWD) | 2506.688 | 2506.568 | 2506.528 | 2506.408 | 2506.368 | 2506.248 | 2506.208 | 2506.088 | 2506.048 | 2505.928 | 6.0000 |
| BENT 3 (BK) | 2506.288 | 2506.168 | 2506.128 | 2506.008 | 2505.968 | 2505.848 | 2505.808 | 2505.688 | 2505.648 | 2505.528 | 6.0000 |

STATE OF TEXAS
MICHAEL D. HYZAK
90180
LICENSED
PROFESSIONAL ENGINEER

Texas Department of Transportation
Bridge Division

ESTIMATED QUANTITIES
AND
BEARING SEAT ELEVATIONS
US 87
NORTH BOUND
UNDERPASS

| | | | | |
|---|---|---|---|---|
| FILE: T469eq01.dgn | DN: TRA | CK: MDH | DW: RMP | CK: MDH |
| ©TxDOT DEC 2012 | CONT: 0005 | SECT: 05 | JOB: 102 | HIGHWAY: IH20 |
| REVISIONS | DIST: 8 | COUNTY: HOWARD | | SHEET NO.: 170 |

# Include CSAB standard in Plan Set

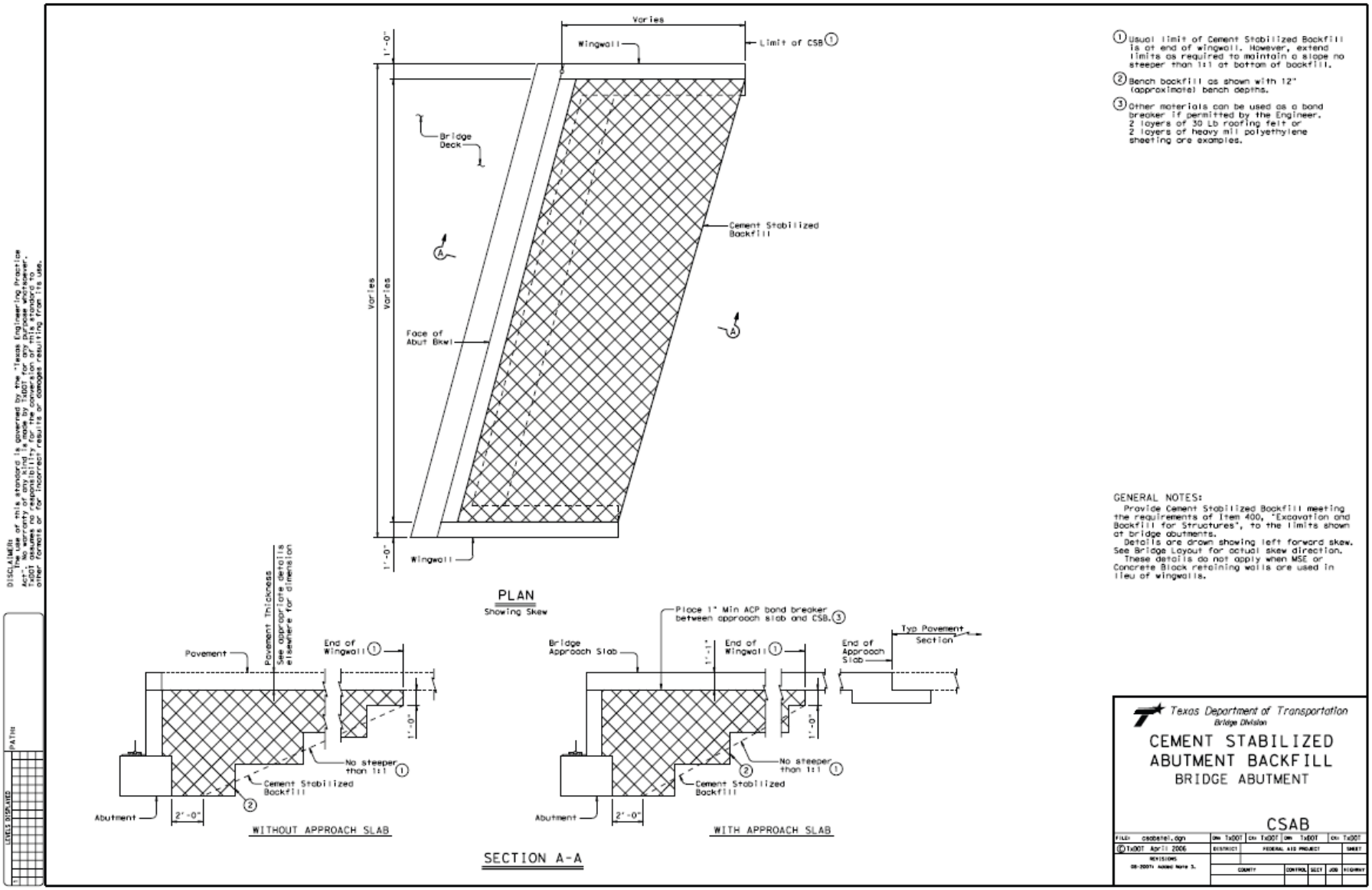

# Column Reinforcement and Detailing Changes

- Keeping in mind that our spirals are not spirals…
- New Spiral Reinforcement for grade separation bridges
  - Due to truck impact
  - Based on TTI Study
- 1.5 flat turns on each end of Spiral
  - To reflect AASHTO LRFD 5.10.6.2
- Bar Laps and extensions
  - Updated to meet specifications for grade 60 reinforcing
- Construction joint at drilled shaft or footing will be a uniform 1' min below finished grade, regardless of feature crossed

# New Spiral

| Column Size | | | | | Size | Pitch |
|---|---|---|---|---|---|---|
| 3'-0" (36") | 0.26 | 10 | #9 | 0.98 | #4 | 3" |
| 3'-6" (42") | 0.36 | 14 | #9 | 1.01 | #4 | 3" |
| 4'-0" (48") | 0.47 | 18 | #9 | 0.99 | #4 | 3" |

ALL OTHER COLUMN SPIRAL SIZES STAY THE SAME

DRILLED SHAFT SPIRALS REMAIN UNCHANGED

Larger spiral provides adequate resistance to the 600 kip impact load

DO NOT design the column for flexure or further analyze the effects of the 600 kip load on substructure. Static design methods do not capture the performance. The above spirals are all that is needed.

See ~Bridge Design Manual, Chapter 2, Section 2

# Cannot prevent everything

# Intended to prevent Bridge collapse due to truck impact

# New Spiral

- New #4 Spiral at 3” Pitch will not be used for stream crossings; there’s no need
- New spiral will appear on Bent Standard Drawings when necessary based on column size
  - Will allow contractor to substitute a 6” pitch for stream crossings.

# 1.5 Flat Turns

- All Column Sizes are going to 3 flat turns, total
  - 1.5 flat turn top and bottom
- Will be specified on Drilled Shaft spirals, too

# Bar Laps and Extensions

Min extension into supported elements:
#6 bars = 1’-6”
#7 bars = 1’-8”
#9 bars in abutment/wingwall caps = 2’-3”
#9 bars in bent caps = 2’-8”

Min lap with column reinf:
#7 bars = 2’-9”
#9 bars = 4’-6”

AASHTO T-10 is still deliberating changes to bar development and laps; current proposals indicate shorter laps in columns

# Thanks for Listening.  Any Questions?