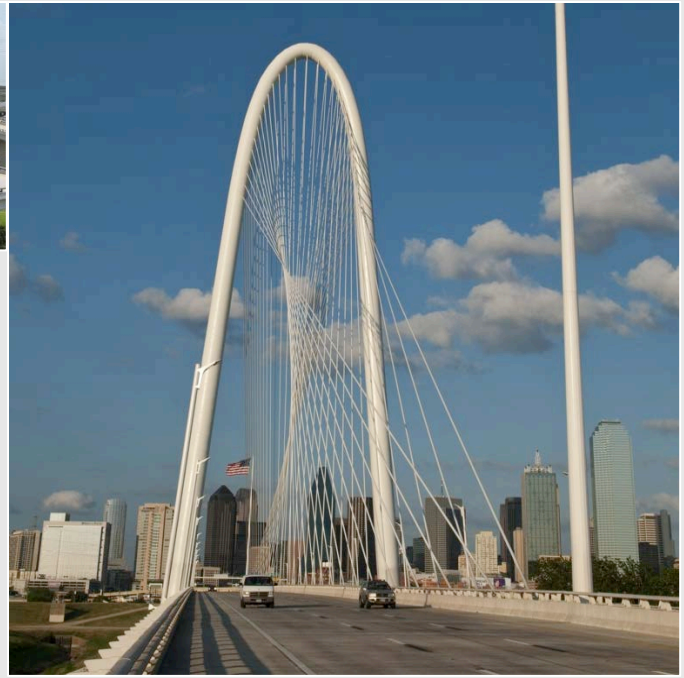

SEAMLESS BRIDGES

Michael Hyzak, P.E.

TxDOT Bridge Division

Table of Contents

1 Brief History and Standard TxDOT Bridges

2 Performance Issues and Why Seamless Bridges

3 Semi-Integral Abutments: TxDOT Research Project

4 Semi-Integral Abutments: Details for Trial Projects

5 Semi-Integral Abutments: TxDOT Approach Slab Practice and Modification for Jointless Bridges

6 The Future: Seamless Bridges and Concrete Pavement

History of Jointless Bridges at TxDOT

- Current Standards with Jointless Features
  - Cast-in-Place Reinf Conc Slab Spans
    - single and two span bridges up to 50 ft total length
  - Concrete Slab and Girder (Pan Form) Spans
    - multi-span bridges up to 120 ft in total length
- Historic Standards with Jointless Features
  - Box Beams (1975-1990's)
  - Reinforced Concrete Tee Beams (1920s-1940s)
  - Steel Rolled Beam Spans (1930s)
- Custom-Designed Cases (Before Integral Abutment was a Type)

Anatomy of a Basic TxDOT Bridge

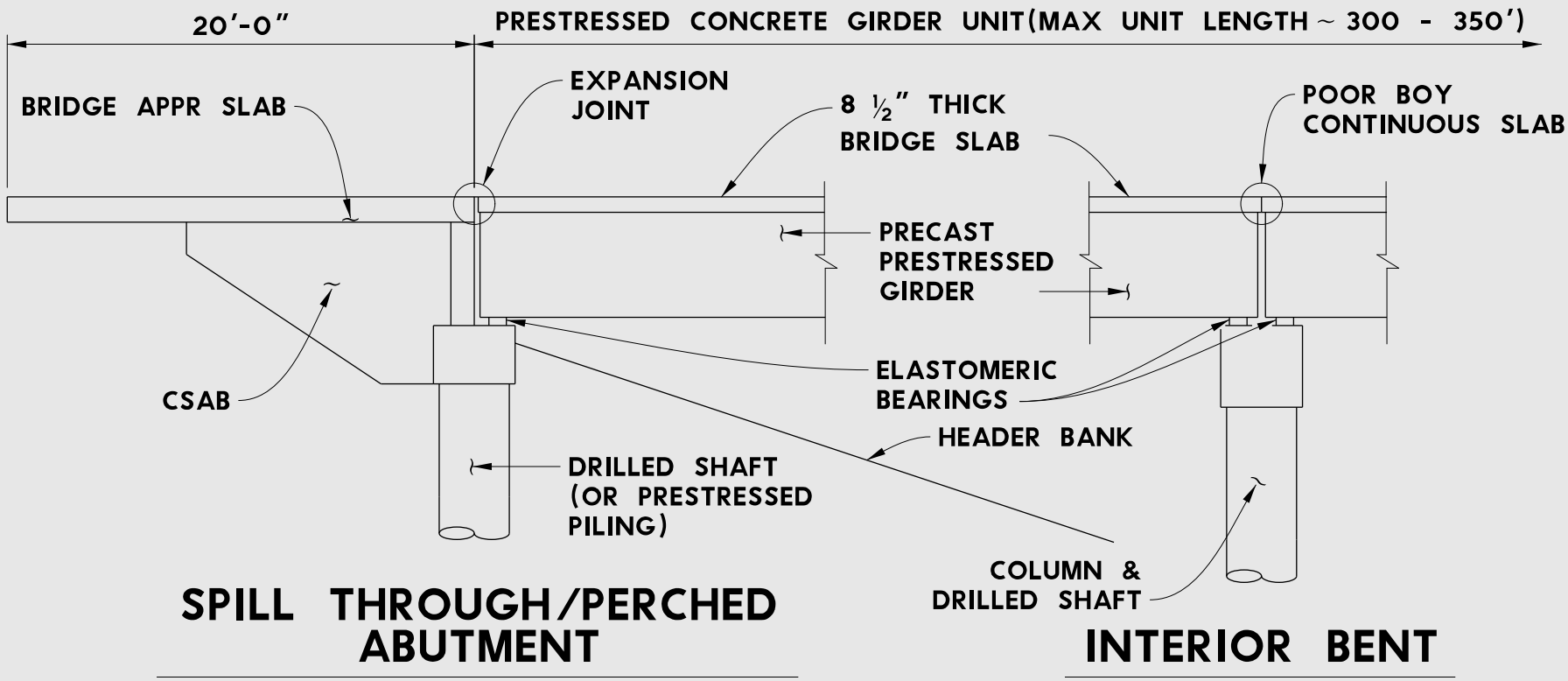

Common Expansion Joint Types

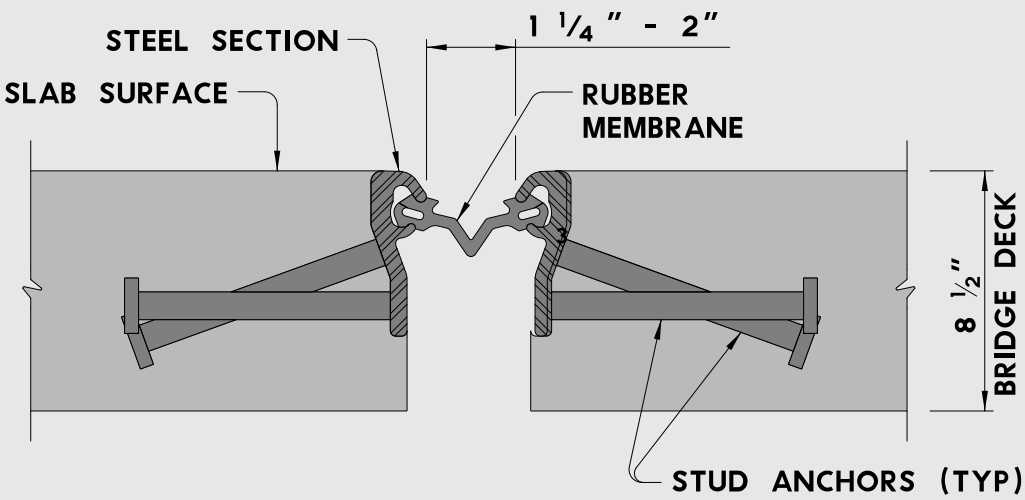

Sealed Expansion Joint (SEJ)

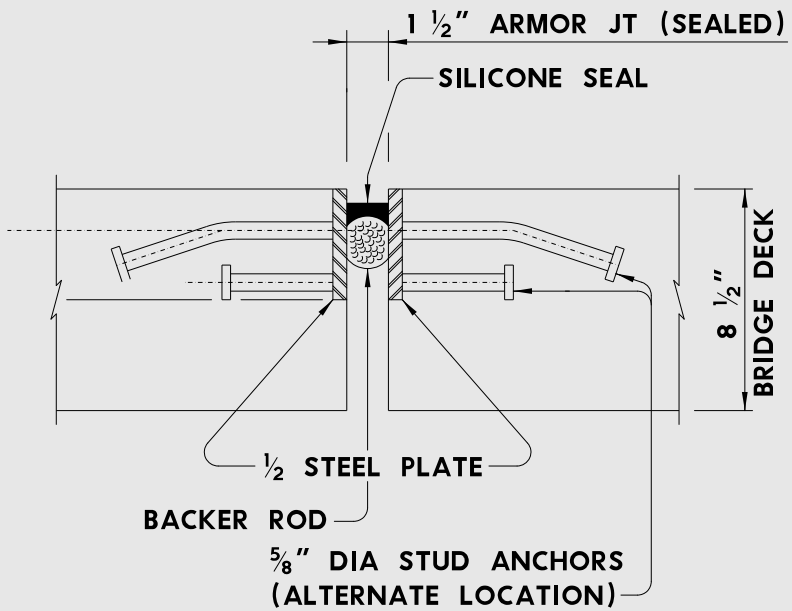

Armor Joint (Sealed)

SEJ Installation at End of Skewed Prestressed Bridge

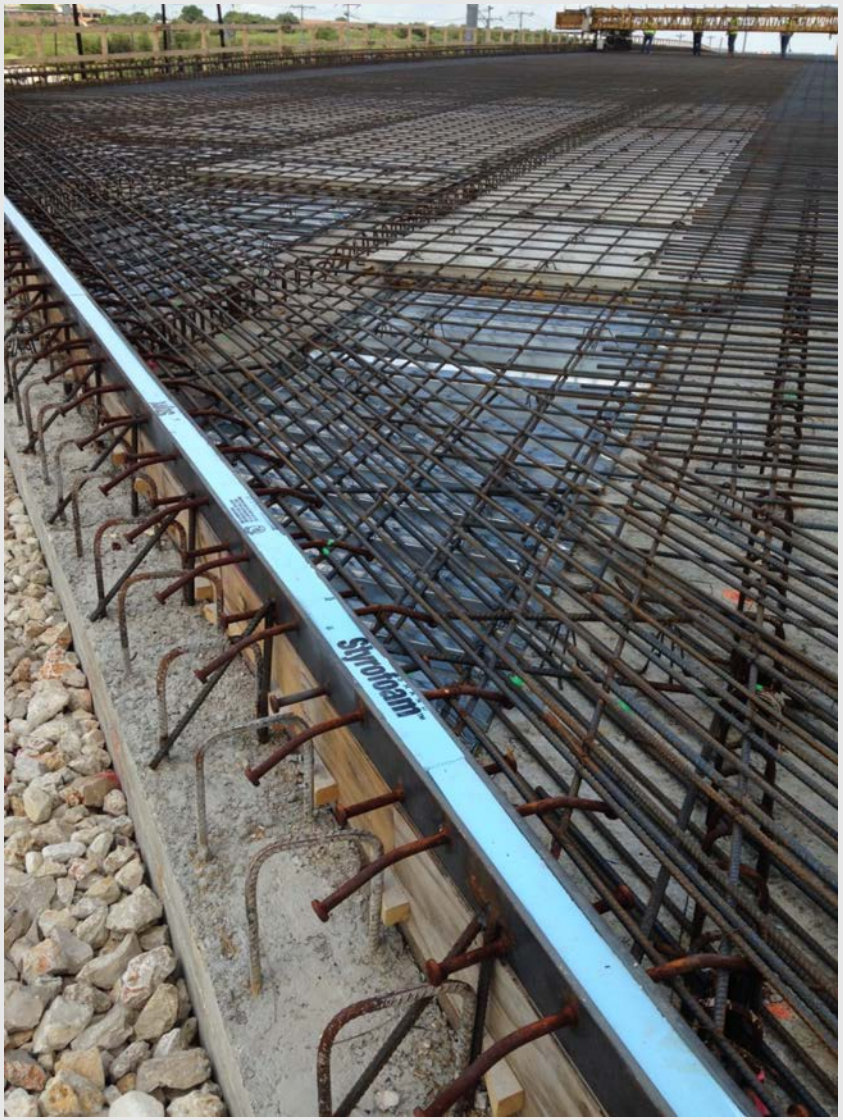

Poor-Boy Continuous Slab at Interior Bents

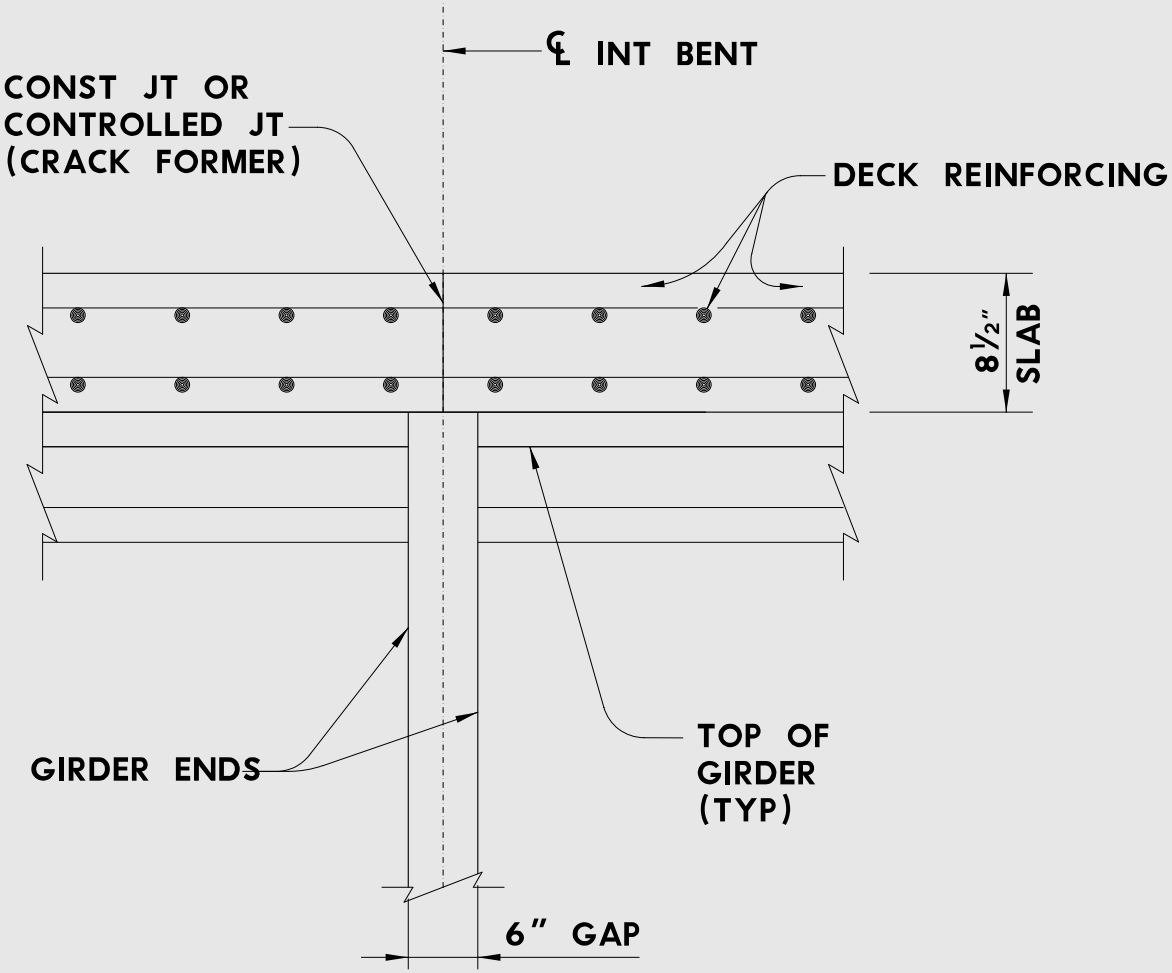

- Used since 1980s
- Avoids leakage of joints
- Deck will crack, but in a controlled manner
- Somewhat similar to what is now referred to as a “link-slab”

Poor-Boy Continuous Slab at Interior Bents

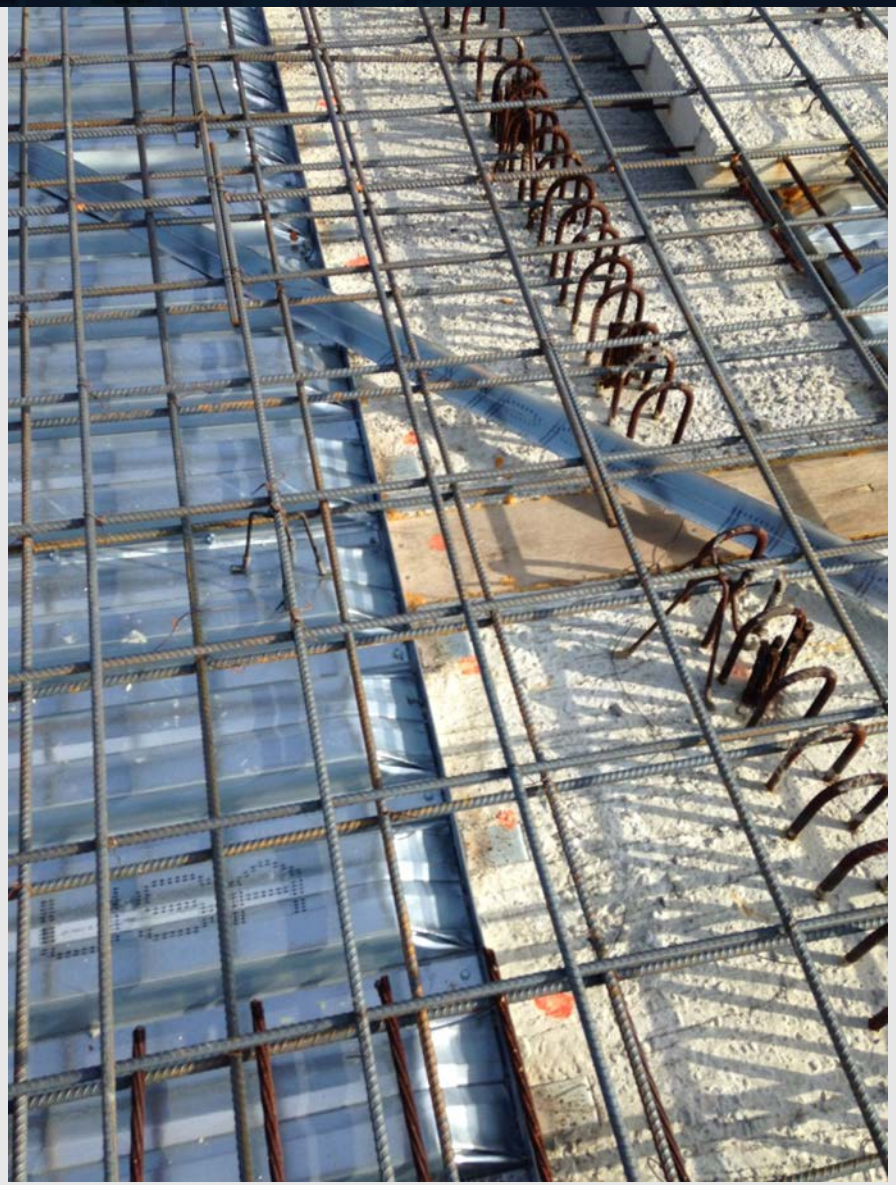

Poor-Boy Continuous Slab at Interior Bents

TxDOT Corrosion Countermeasures Map

Areas in Blue Employ Some Form of Corrosion Countermeasures due to Deicing Salts

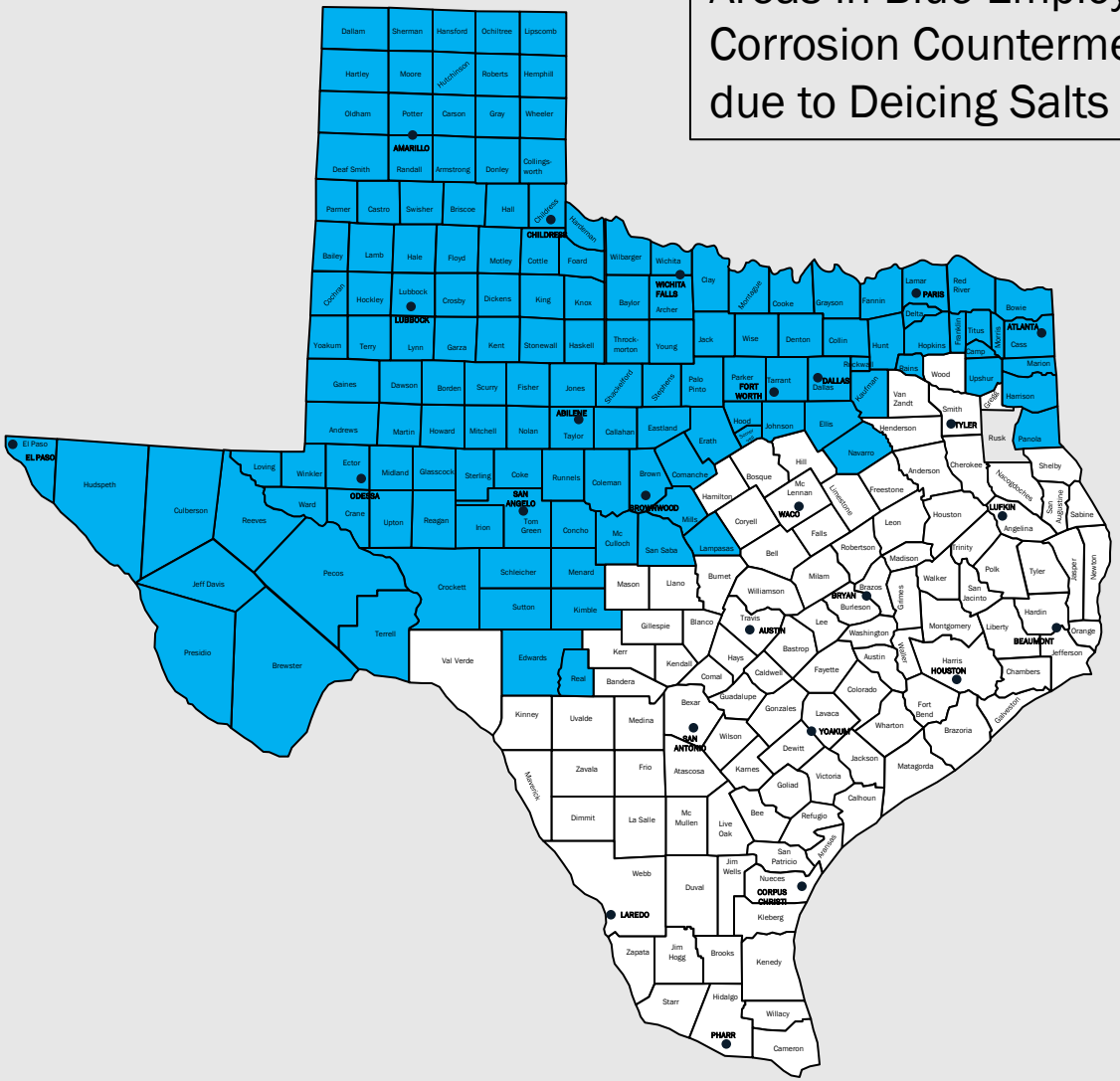

TxDOT Corrosion Countermeasures

- High Performance (Low Permeability) Concrete
  - Calcium Nitrite occasionally
- Corrosion Resistant Reinforcing Steel
  - Epoxy Coated (ASTM A775)…used by TxDOT since late 1980s/early 1990s
  - Hot Dipped Galvanized (ASTM A767)
  - Stainless (ASTM A955)
  - Dual Coated (ASTM A1055)
  - Low Carbon, Chromium (ASTM A1035)
  - Glass Fiber-Reinforced Polymer

  Now All Options in TxDOT Standard Specifications
- Increased Cover
- Concrete Coatings
  - Silane
  - Silicone Resin Paint
- Jointless Bridges: New Tool To Incorporate

Expansion Joints Eventually Leak

Integral Abutments: Key to Jointless Bridges

- Superstructure is "integrally" connected to bridge abutment
- Joint to accommodate movement relocated to behind the abutment or the end of an approach slab
- Fully integral abutments require a single row of flexible (usually steel) piles

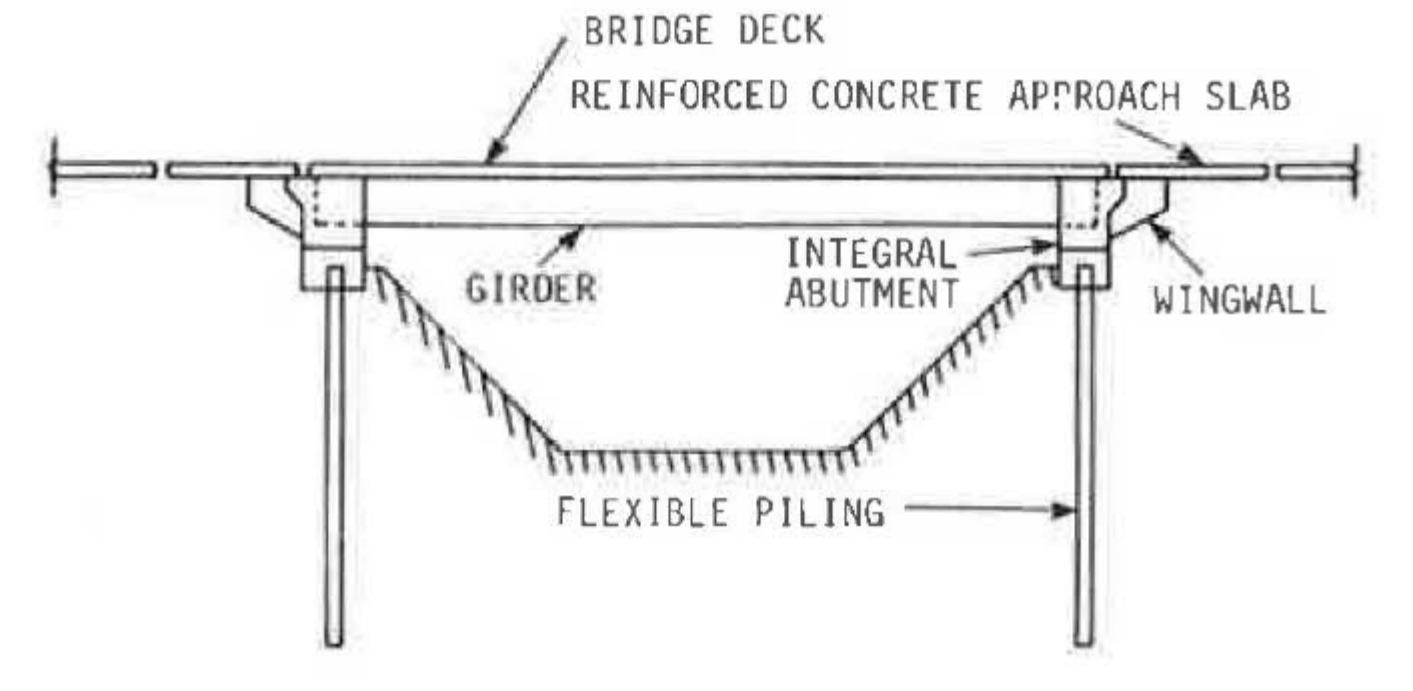

Figure from Transportation Research Record 903 "Skewed Bridges with Integral Abutments" Greimann, et. al.

Typical Foundation Types in Texas: Drilled Shafts

Typical Foundation Types in Texas: Precast Prestressed Piling

Semi-Integral Abutments

- Characteristics
  - Single or multiple span continuous superstructure without movable deck joints
  - Abutments supported on rigid foundations (eg. drilled shafts, battered piling, etc)
  - Superstructure moves longitudinally independent of the abutments

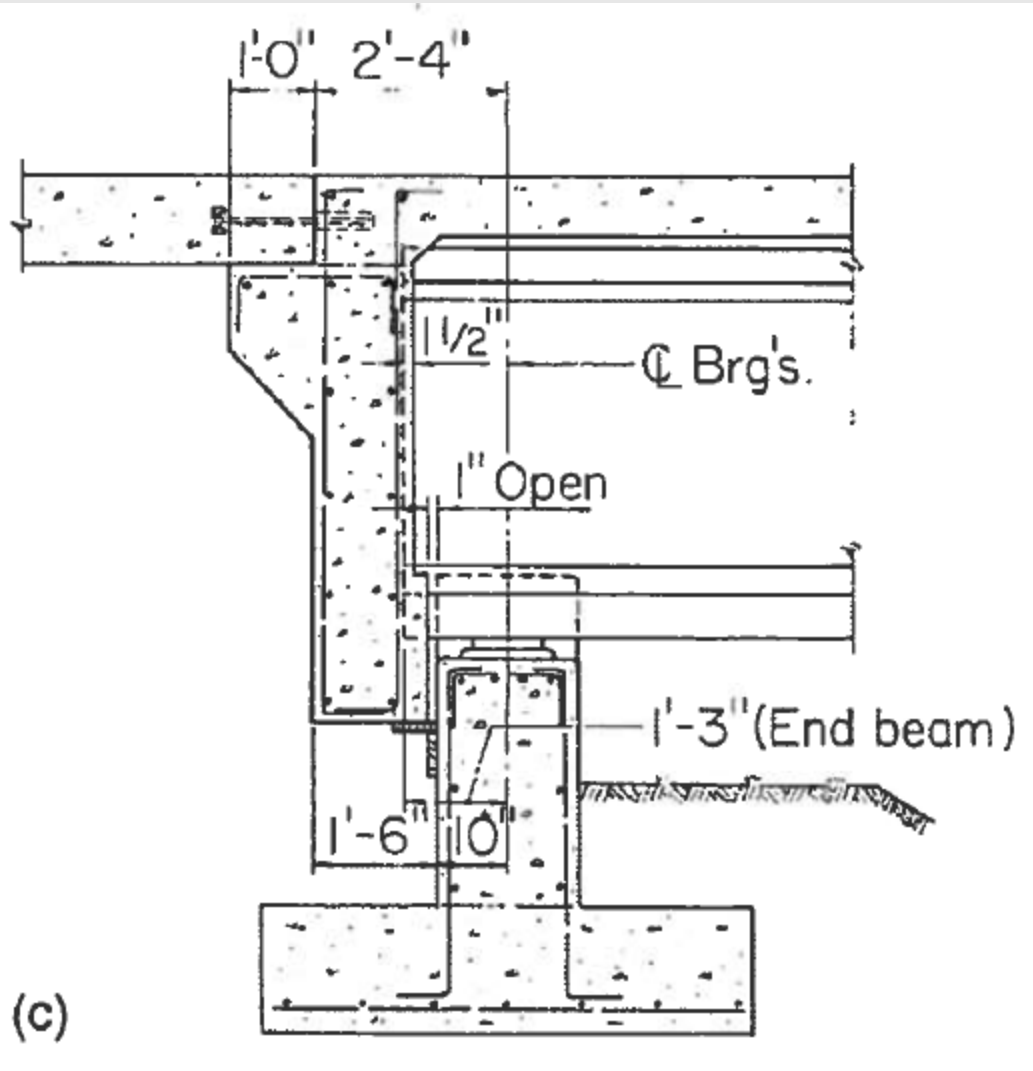

Figure from Integral and Semi-Integral Bridges, Burke (2009)

Ontario Concepts: Semi-Integral

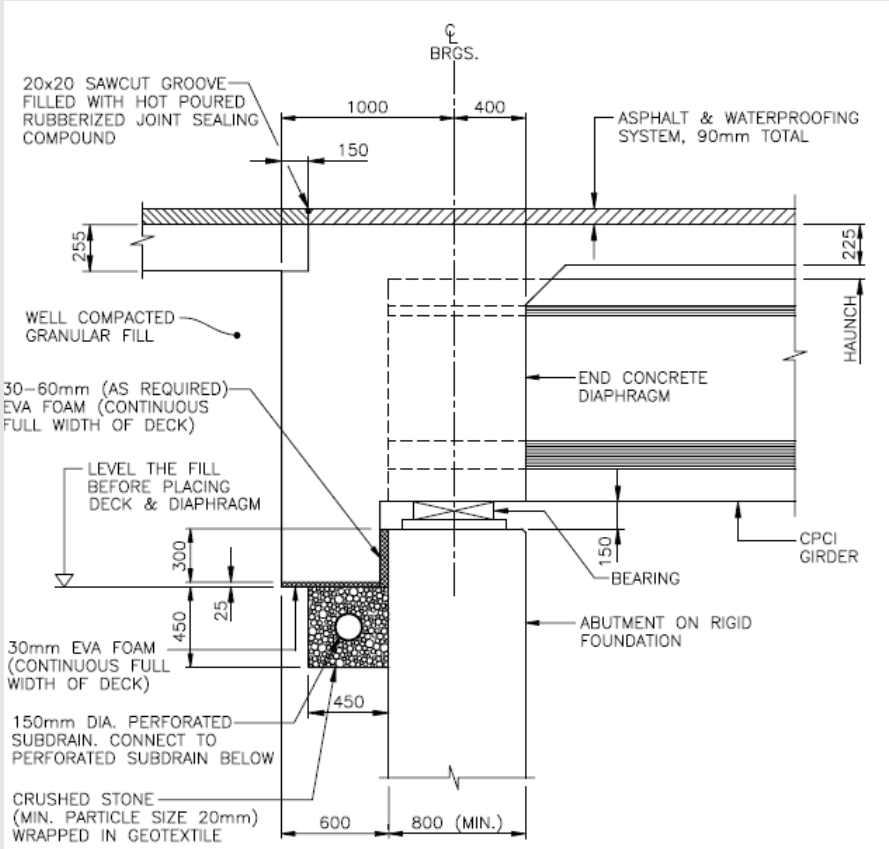

CPCI GIRDER WITH CONCRETE DECK AND END DIAPHRAGM

FIG. 8

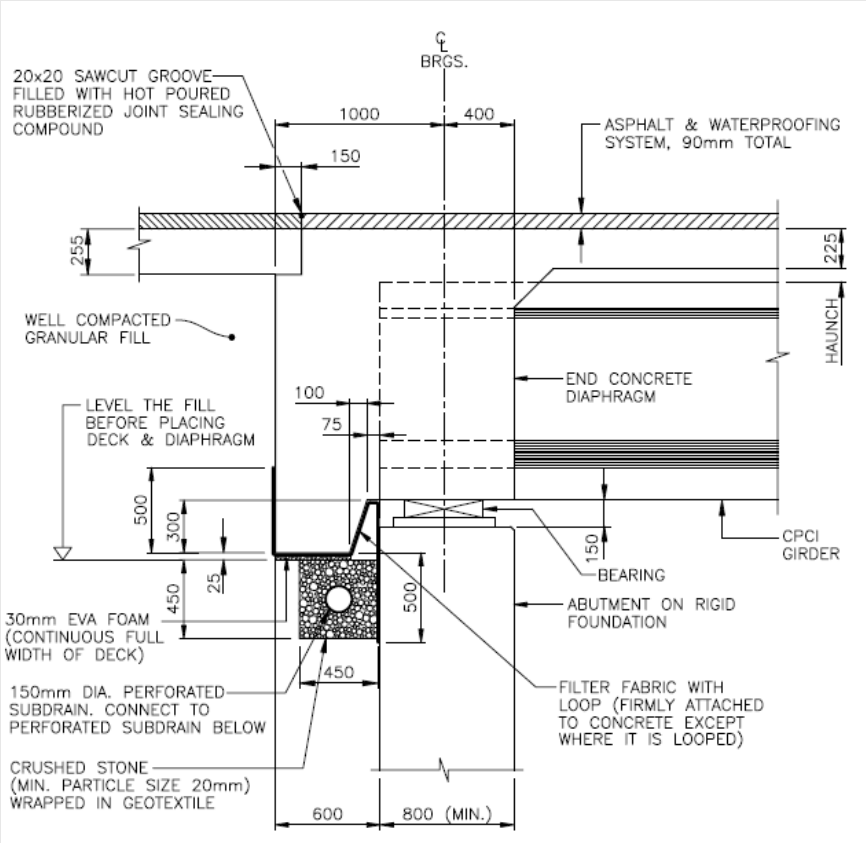

CPCI GIRDER WITH CONCRETE DECK AND END DIAPHRAGM

FIG. 10

Ontario Ministry of Transportation Report BO-99-03 “Semi-Integral Abutment Bridges”

Semi-Integral Abutments

- TxDOT Preference Currently
  - Expansion joints in bridges a significant source of deterioration
  - TxDOT's typical foundations not conducive to fully integral abutments
  - Less disruptive change to typical TxDOT bridge design and details

Research Project 0-6936

- "Development of Integral/Semi-Integral Abutments for Texas Bridges"
  - UT Austin (Zornberg and Helwig)
  - 9/16 through 8/20
  - Scope:
    - State of Practice Literature Search
    - Survey of State DOT's and TxDOT Districts
    - Conduct Field Condition Assessments
    - Compile Case Studies
    - Field Monitor Trial Bridges
    - Conduct Laboratory Testing and Refine Models
    - Compile Design Concepts, Limitations, and Details
    - Develop Pilot Short Course

Integral or Semi-Integral Abutments: National Usage

- Allowed in 80% of States
- Foundations Similar to Texas:
  - 20% of States Allowed with Precast Concrete Piles
  - 25% of States Allowed with Drilled Shafts
- Significant Usage of SIAB:
  - Montana (95% of all bridges)
  - Ohio (1332 structures)
  - Virginia (1/3 of all bridges since 2007)
  - New Mexico (100 structures)
  - Maryland (85-100 structures)
  - Pennsylvania (< 100 structures)
  - Delaware (50 structures)
  - Indiana and Nebraska (several)

ODOT Guidance

A: Fully Integral
B: Semi-Integral
C: Traditional

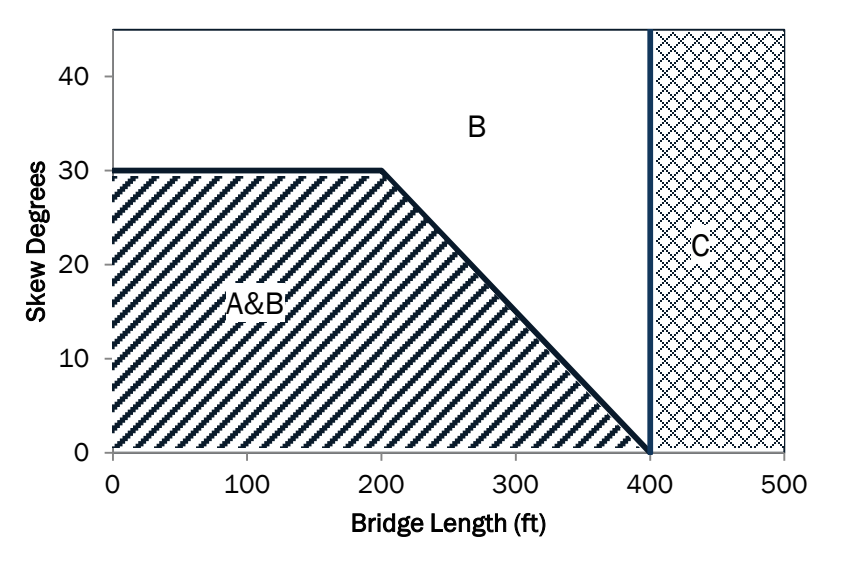

TxDOT Bridge Population (Current Practice)

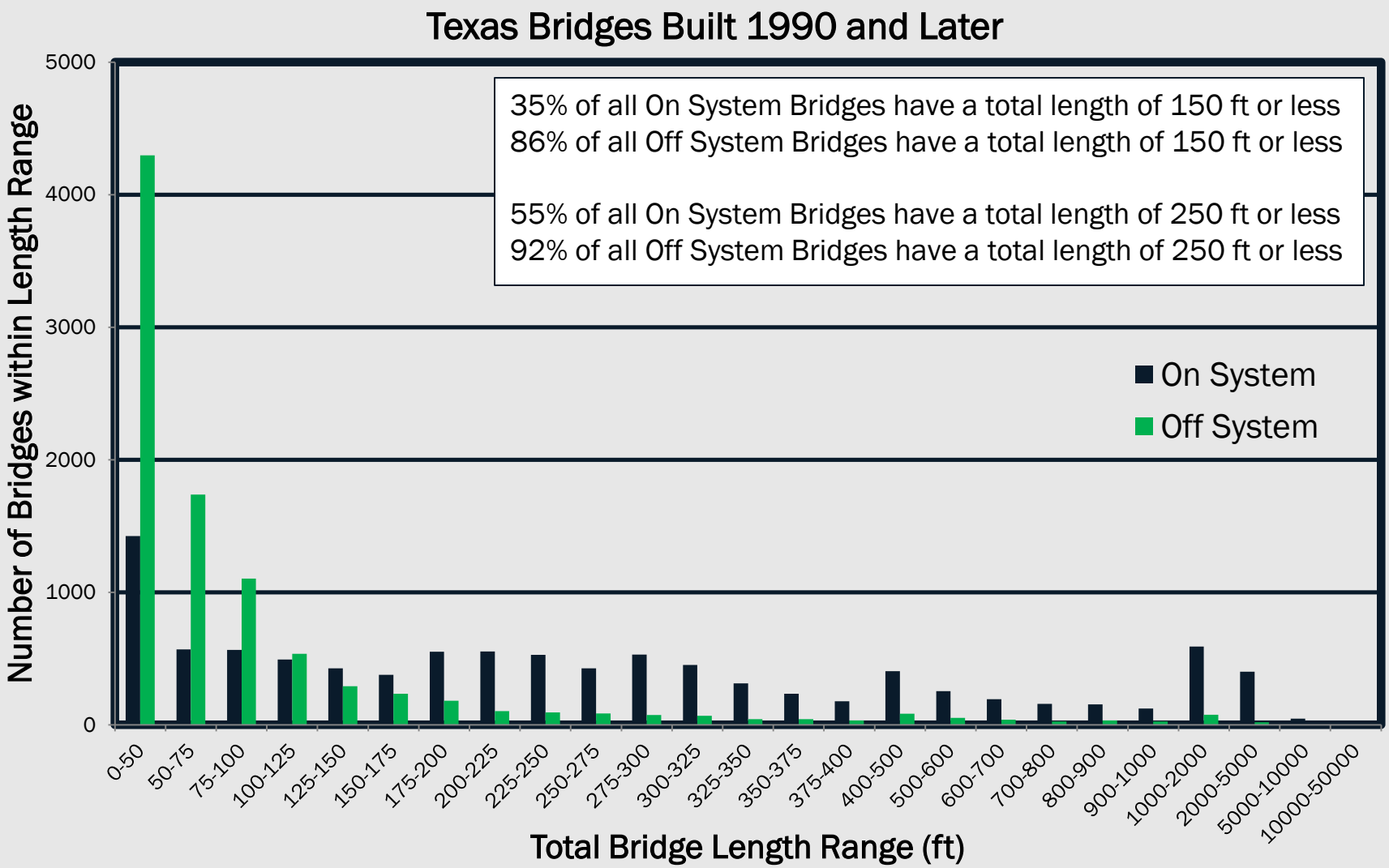

Research Project 0-6936

- Includes laboratory testing:
  - Characterize design pressures
  - Test range of “resilient” backfills

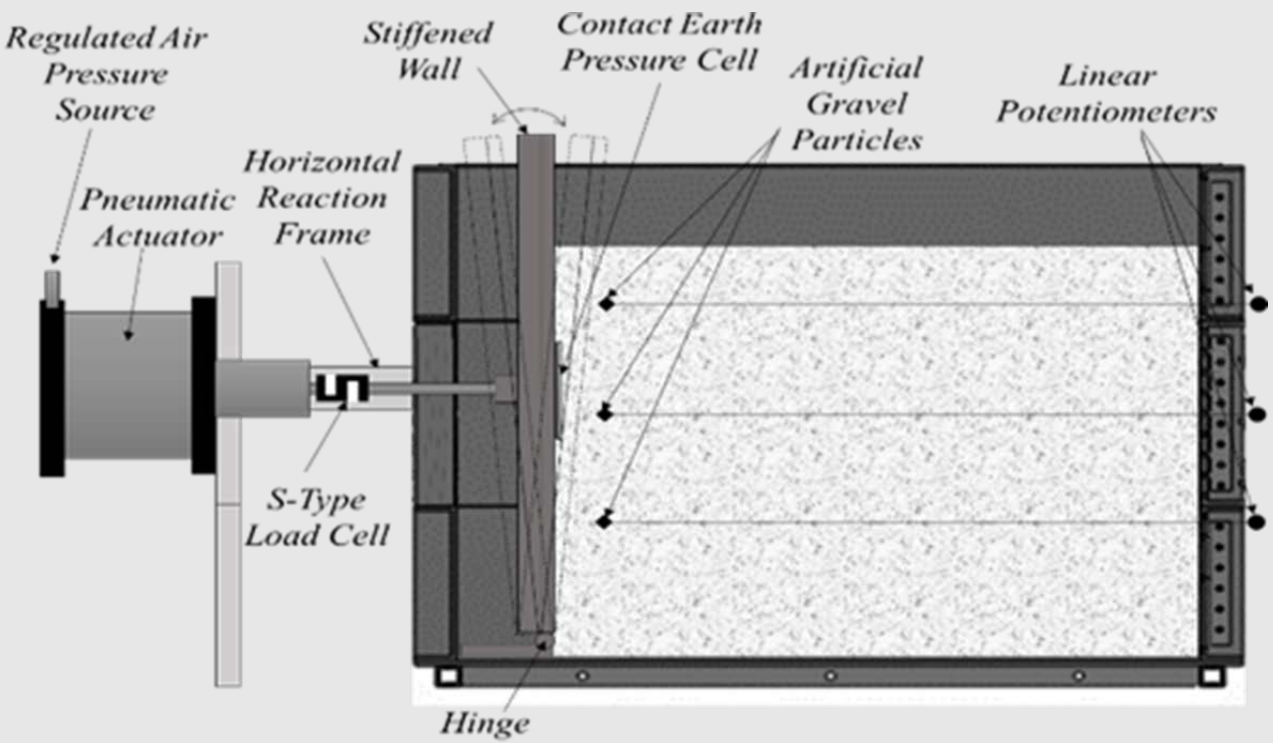

Courtesy Jakob Walter (UT Austin)

Cross Section at Abutment: TxDOT Semi-Integral Abutment

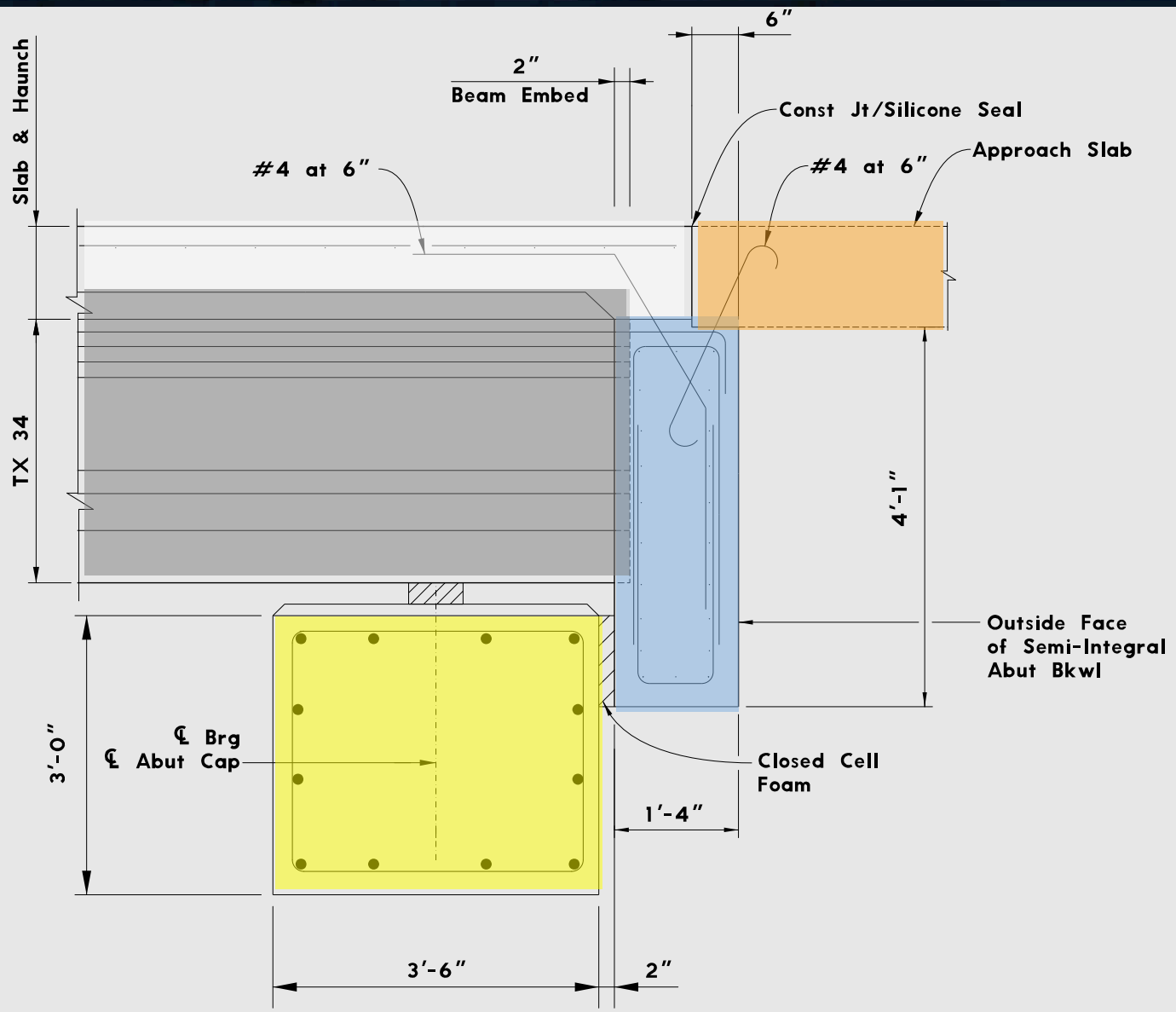

Wingwall and Rail Placement Comparison

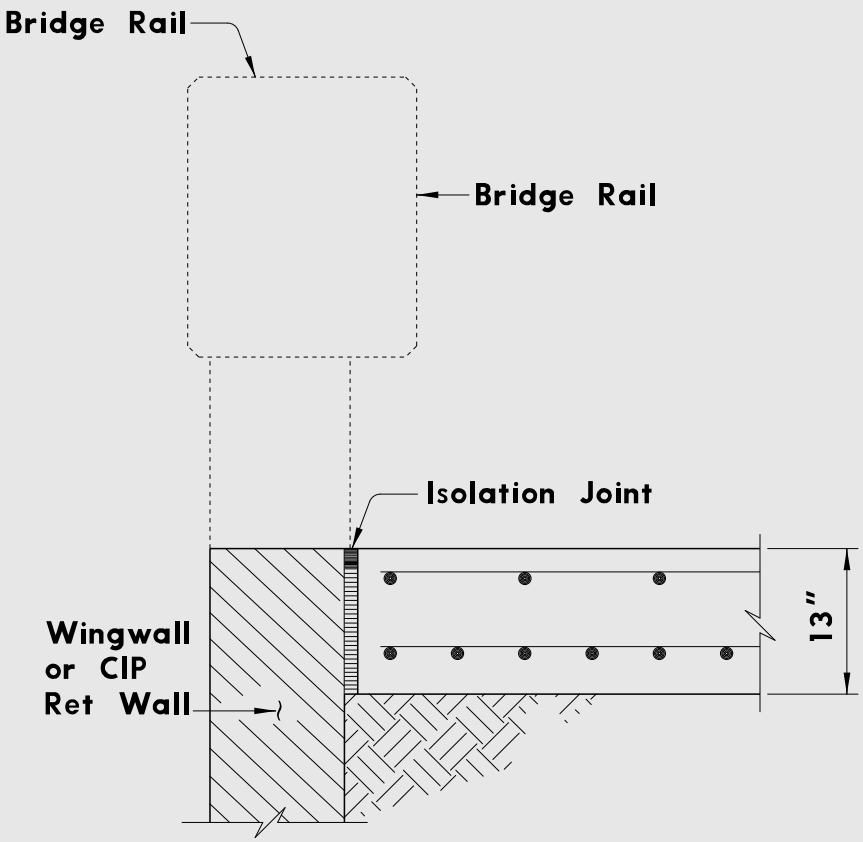

Normal Configuration
on Approach Slab

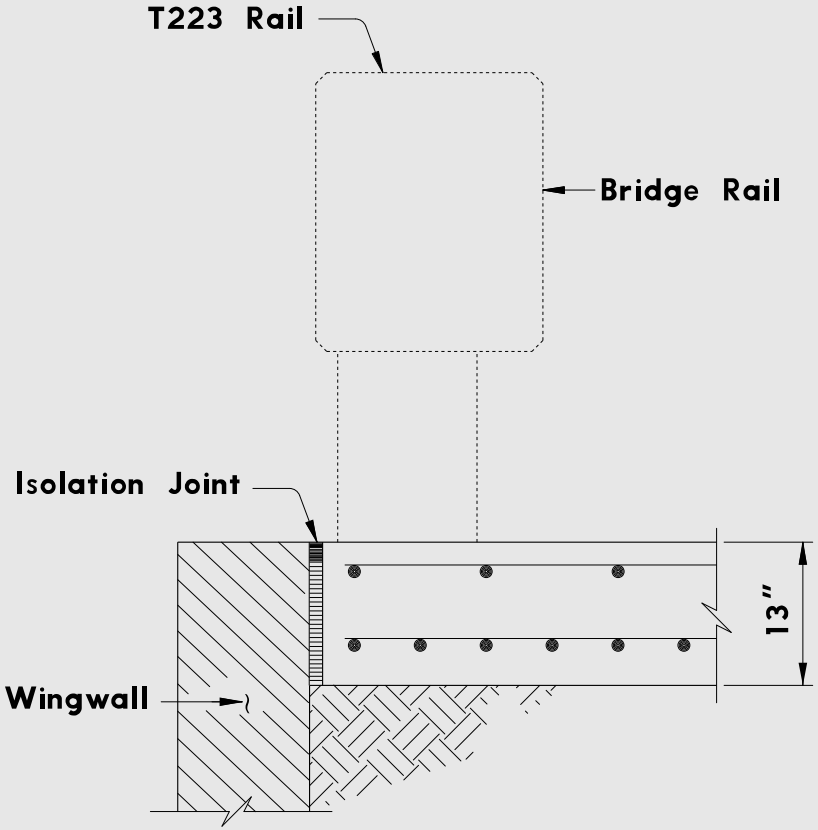

Semi-Integral Configuration
on Approach Slab

Cross Section on Approach: TxDOT Semi-Integral Abutment

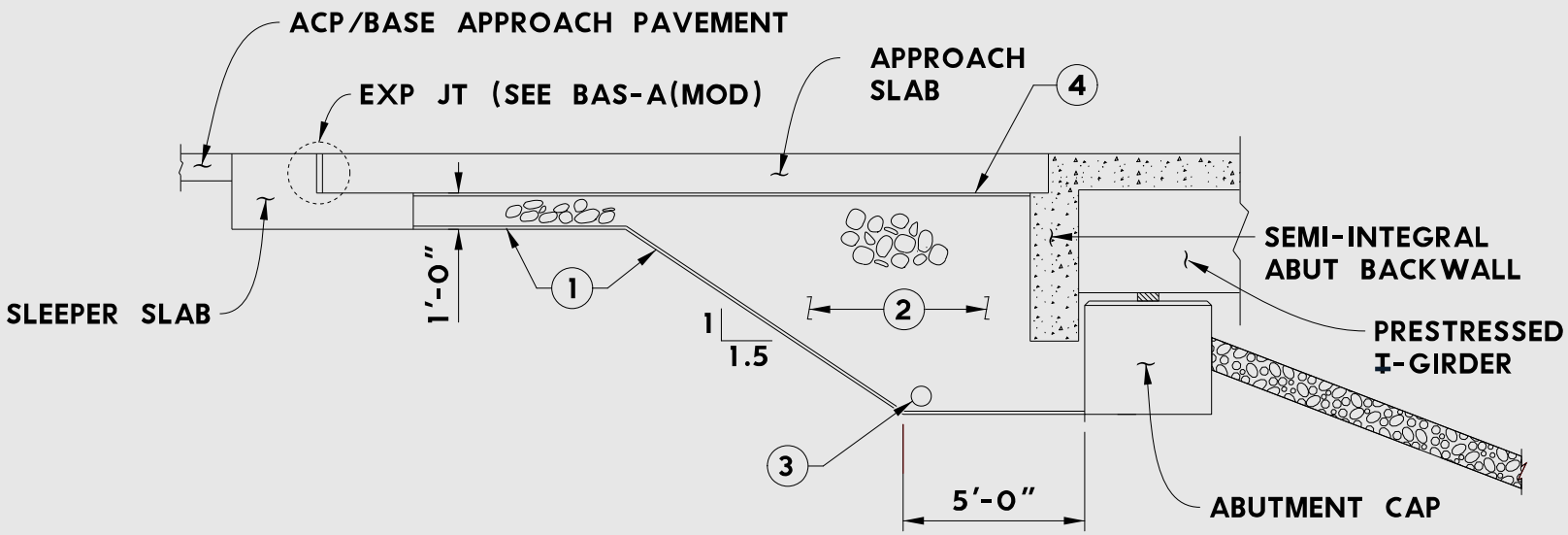

1. Ordinary compaction and a layer of Type 1 Filter Fabric in accordance with DMS-6200 "Filter Fabric".

2. Provide select rock fill in the form of Grade 3 Aggregate per Item 421.2.6 or Type AS or DS select fill per Item 423.2.4.2.

3. Perforated PVC under drain.

4. Initial layer of filter fabric on top of select fill. On top of filter fabric, provide two layers of polyethylene sheet (minimum thickness 6 mils each) conforming to ASTM E 1745 Performance Class A.

Cross Section at End of Approach Slab: TxDOT Integral Abutment

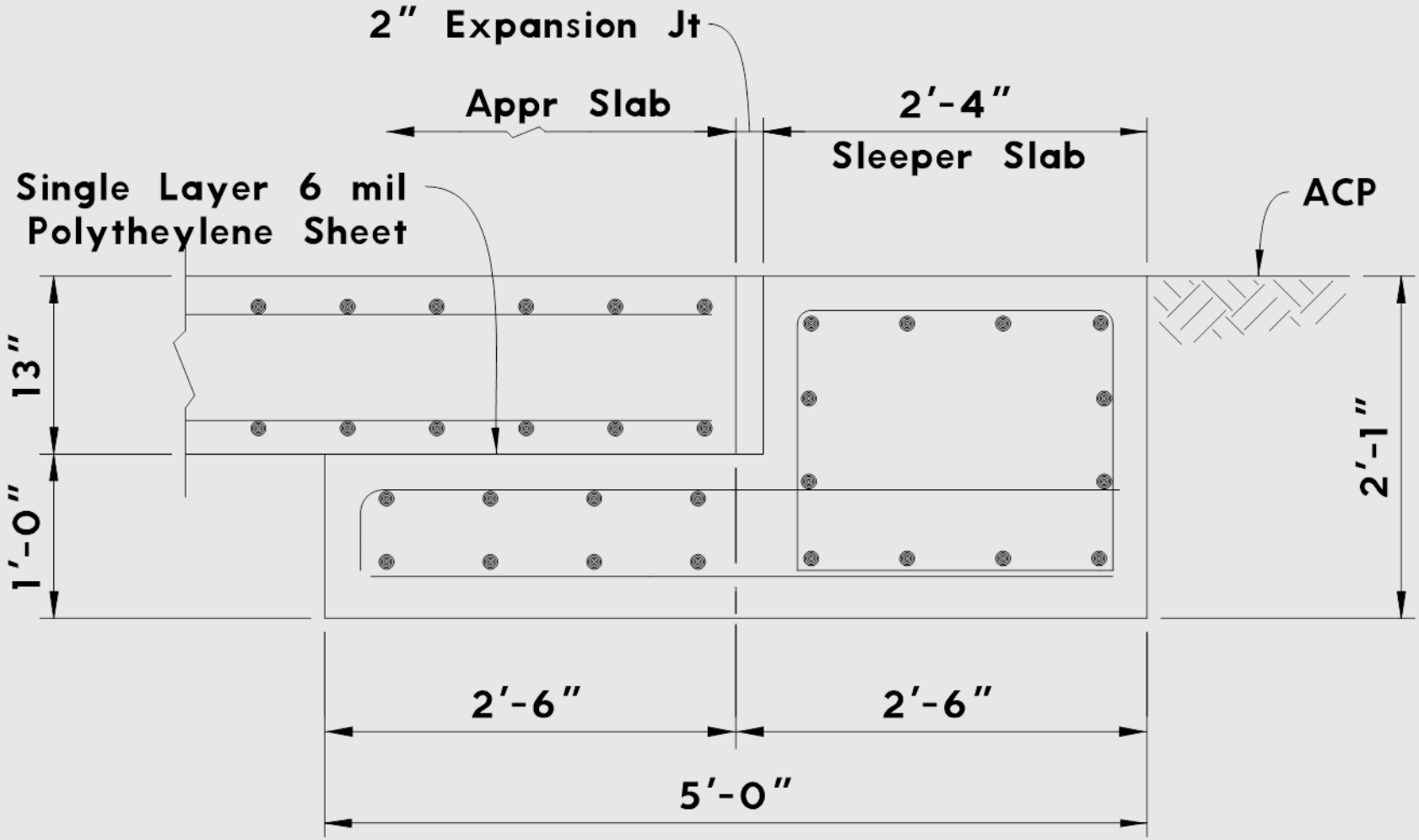

Section at Ends of Standard TxDOT Approach Slabs

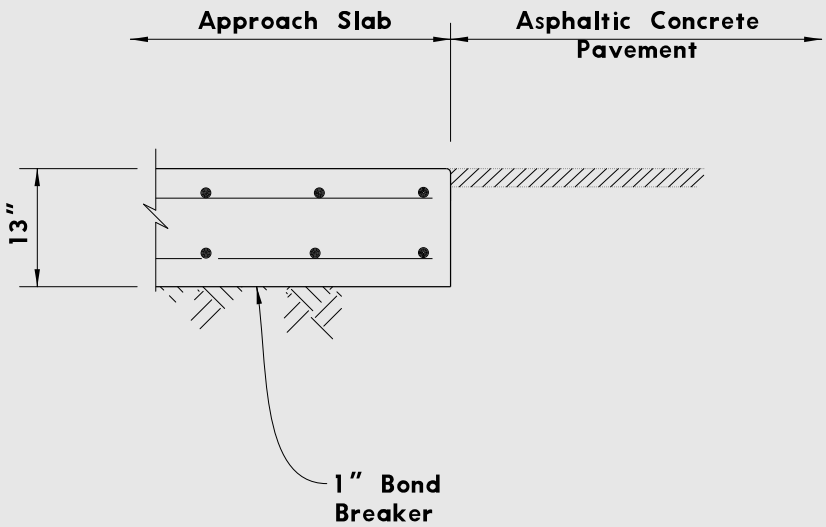

Asphalt Pavement

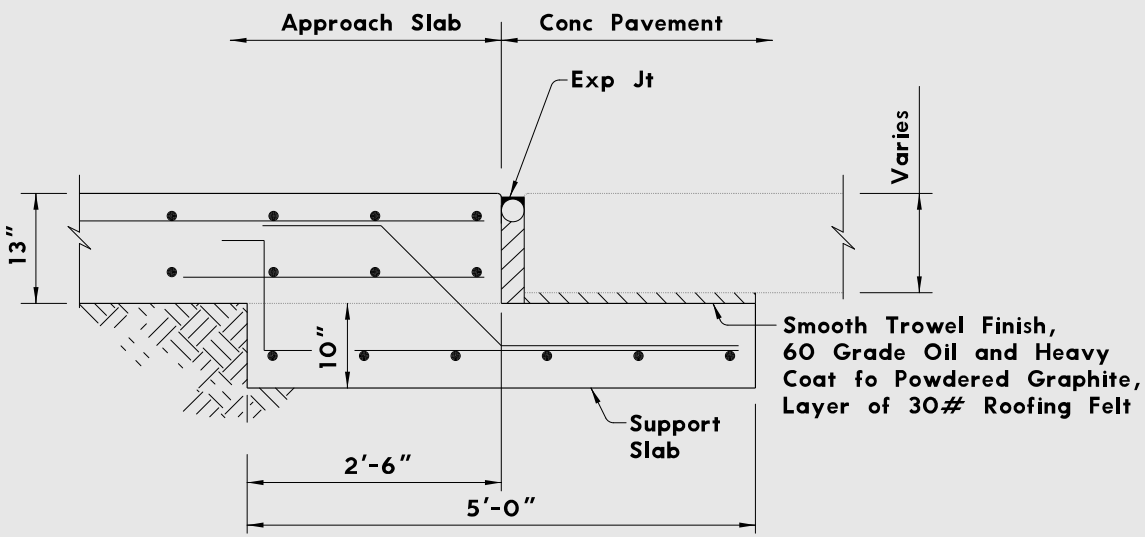

Concrete Pavement

Approach Slab Connectivity

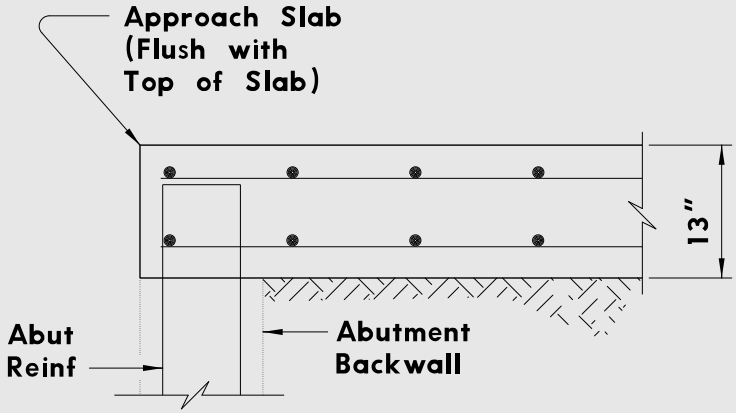

Standard Approach Slab
Connection to Backwall

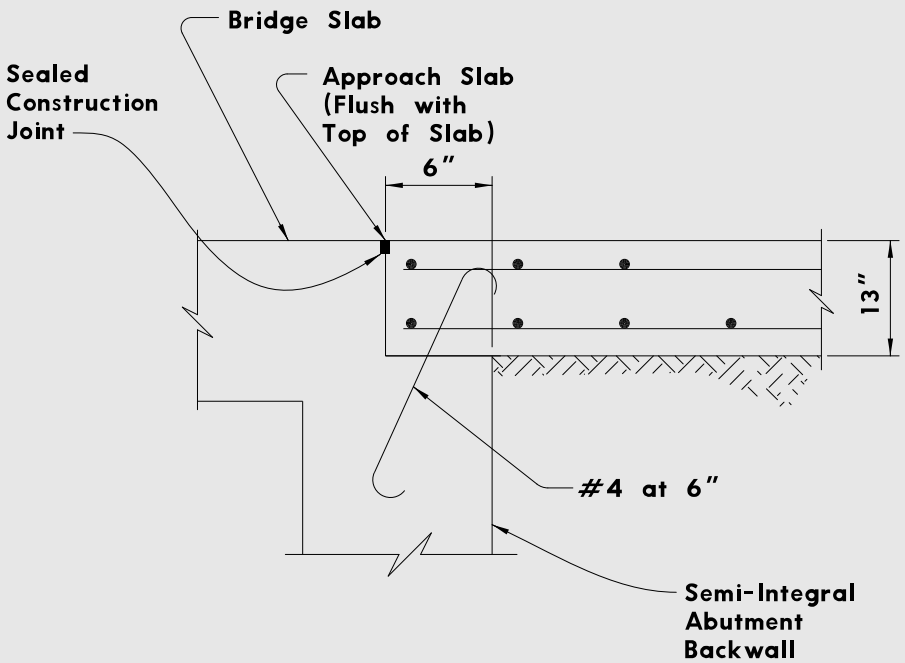

Approach Slab
Connection to Semi-Integral Backwall

TxDOT Approach Slabs: Standard Practice

- Standard Practice
  - BAS-A for asphaltic pavement approach: ftp://ftp.dot.state.tx.us/pub/txdot-info/cmd/cserve/standard/bridge/basaste1.pdf
  - BAS-C for concrete pavement approach: ftp://ftp.dot.state.tx.us/pub/txdot-info/cmd/cserve/standard/bridge/bascste1.pdf
  - Some Districts have variations of the BAS standard
    - Approach slab cast over wingwalls (ATL, CHS, HOU, DAL)
      ftp://ftp.dot.state.tx.us/pub/txdot-info/hou/specinfo/2014/pdf/stdb10a.pdf
      ftp://ftp.dot.state.tx.us/pub/txdot-info/hou/specinfo/2014/pdf/stdb10b.pdf
    - Tapered pavement interface (BRY)
  - HOU WFPT for concrete pavement approach:
    ftp://ftp.dot.state.tx.us/pub/txdot-info/hou/specinfo/2014/pdf/stdb3a.pdf
    ftp://ftp.dot.state.tx.us/pub/txdot-info/hou/specinfo/2014/pdf/stdb3b.pdf
    ftp://ftp.dot.state.tx.us/pub/txdot-info/hou/specinfo/2014/pdf/stdb3c.pdf
  - CSAB for backfill:
    ftp://ftp.dot.state.tx.us/pub/txdot-info/cmd/cserve/standard/bridge/csabste1.pdf
  - Joint Details for approach slab to approach pavement:
    ftp://ftp.dot.state.tx.us/pub/txdot-info/cmd/cserve/standard/roadway/js14.pdf

Concrete Pavement Expansion/Joint Growth

- Research Project 6326 “Rational Use of Terminal Anchorages in Portland Cement Concrete Pavements” Texas Tech
  - Subbase friction plays an important role
  - Movement of CRCP due to temperature variations was not excessive
  - Most distress near the bridge terminal areas were due to volume changes or instability in embankment materials
  - Benefits of Wide Flange and Anchor Lug systems doubtful, and simple Expansion Joint system should be adequate
- Research Project 6022 “Recommendations for Design, Construction, and Maintenance of Bridge Approach Slabs” UT Arlington
- Research Project 6037 “Subbase and Subgrade Performance Investigation for Concrete Pavement” TAMU TTI

Trial Project: SH 240 at China Creek (WFS)

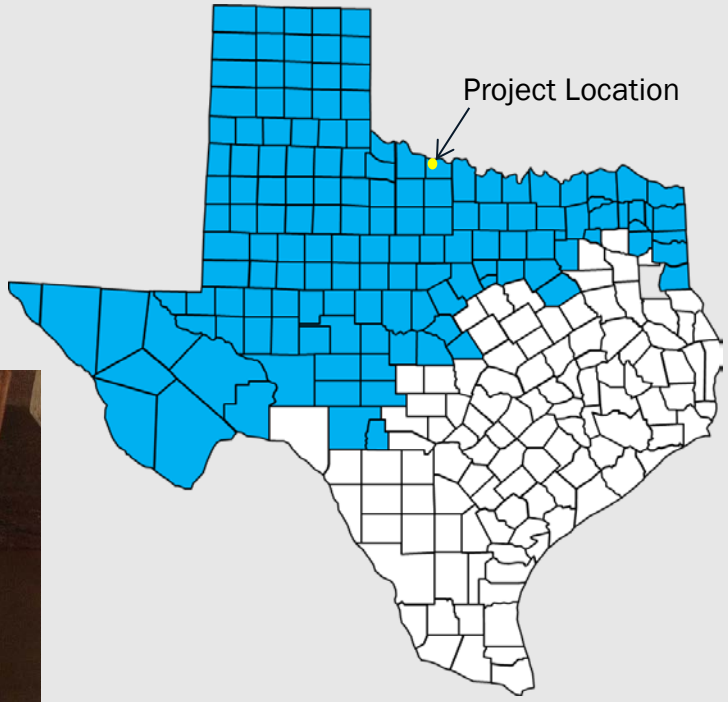

- Single Span Bridge with Tx34 Beams
- 90 ft Approx Span
- Let April 2018

Trial Project: SH 240 at China Creek (WFS)

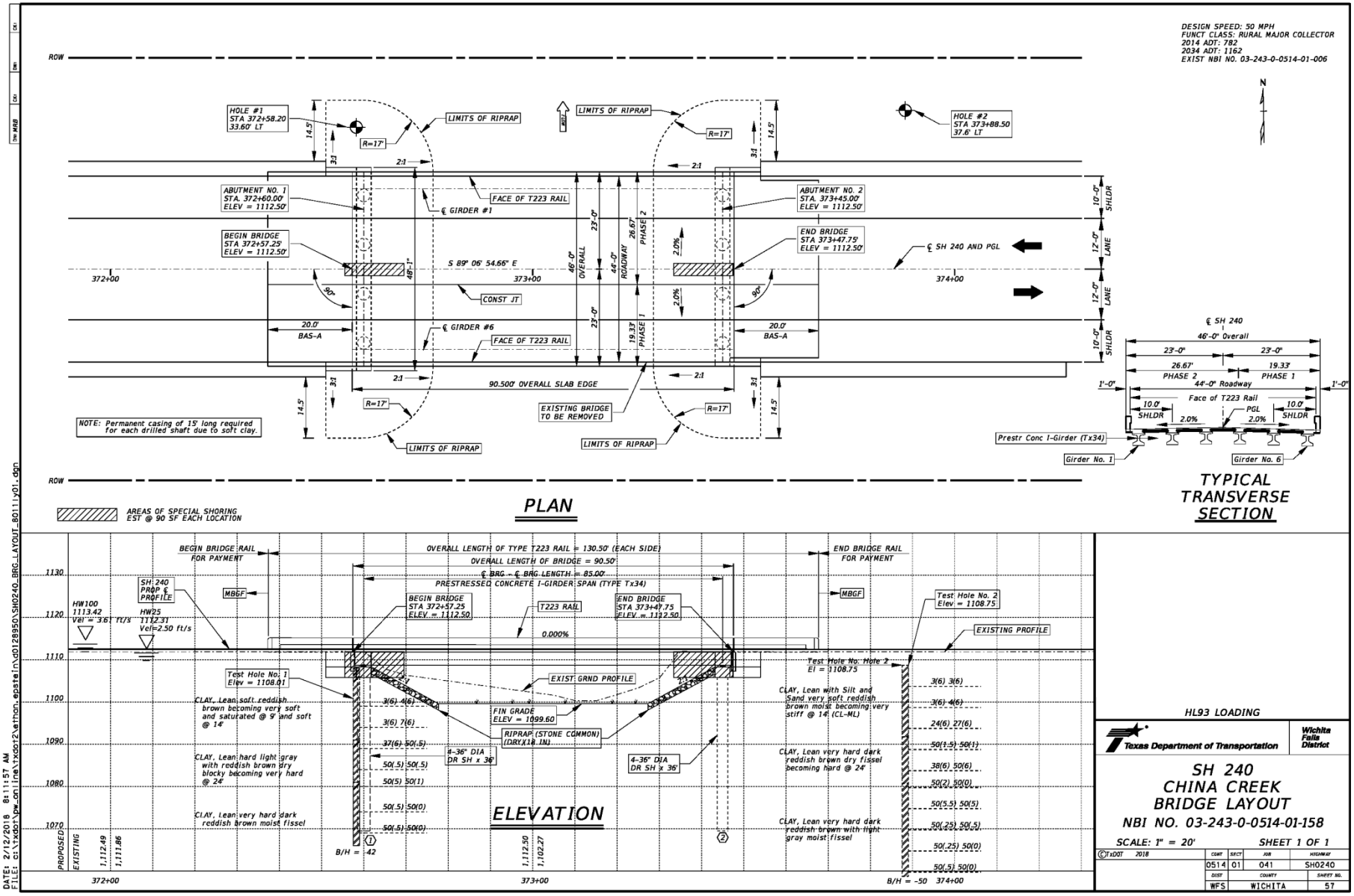

TxDOT Recent Trial Project: CR 2133 at Mack Creek (TYL)

- 68.5 Single Span Off-System Bridge
- 28” Box Beams
- Semi-Integral Sheet Pile Abutments

TxDOT Recent Trial Project: CR 2133 at Mack Creek (TYL)

- Superstructure ties into Backwall
  - Shear keys between box beams
  - Prestressing strands
- Backwall ties into Superstructure
  - Backwall stirrups
- Bituminous Fiber Material *not* a structural connection

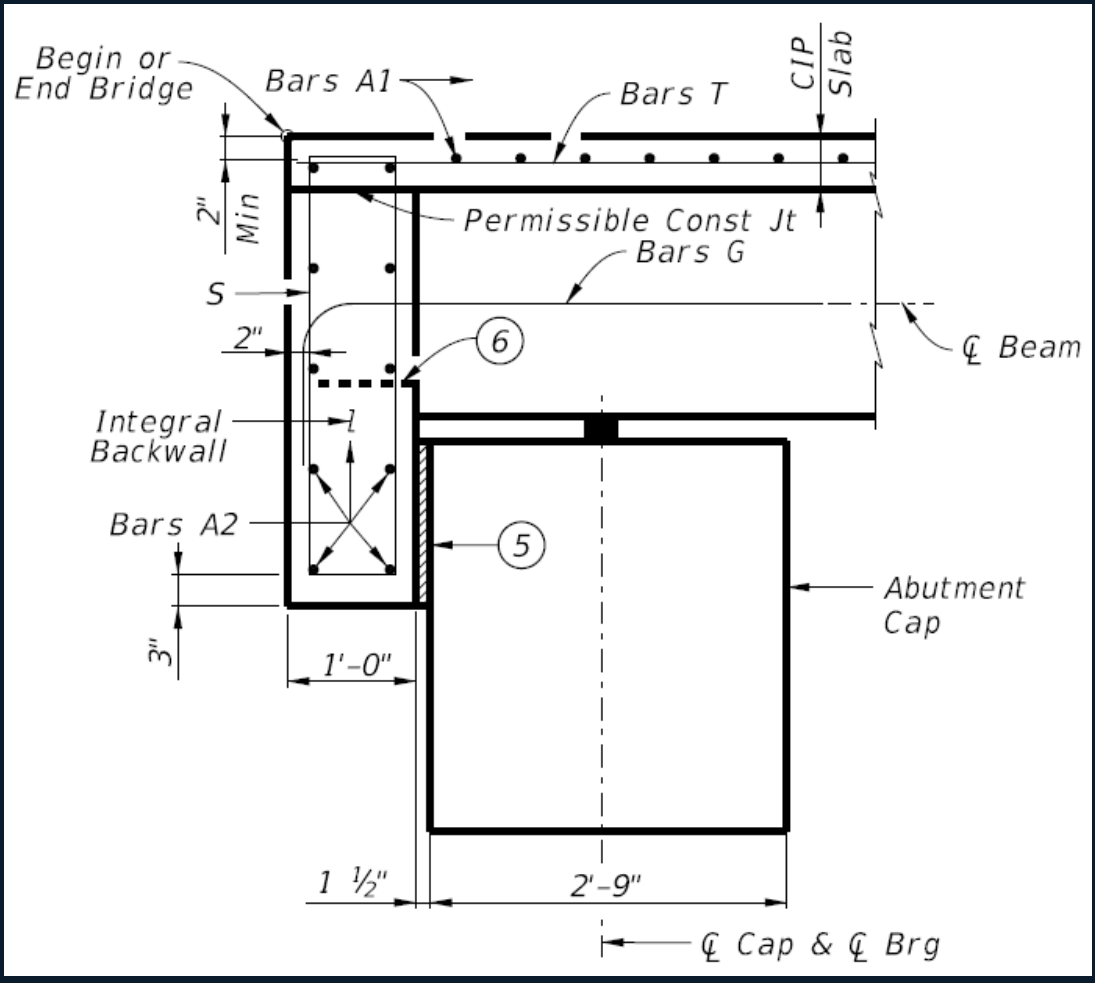

(5) 1 ½" Bituminous Fiber Material between cap and backwall. Bond to cap with an approved adhesive. Face of backwall to be cast with vertical side of cap.

(6) Strands extend 9" from end of beams to tie in with backwall.

TxDOT Recent Trial Project: CR 2133 at Mack Creek (TYL)

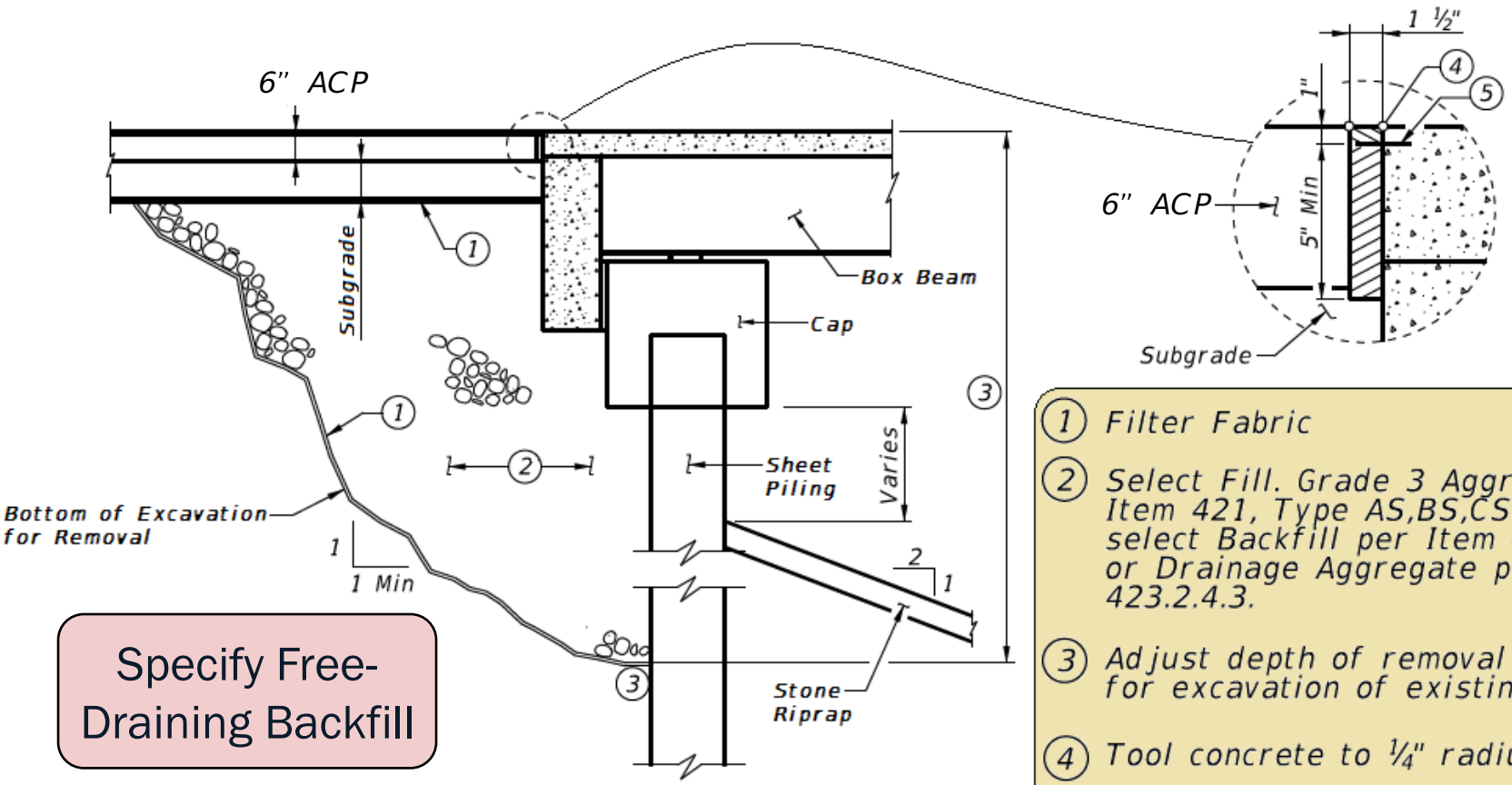

Specify Free-Draining Backfill

- Sheet piles, themselves, are free draining
- Shop paint entire surface of sheet piling with inorganic zinc primer in accordance with Item 407, "Steel Piling"

1. Filter Fabric
2. Select Fill. Grade 3 Aggregate per Item 421, Type AS,BS,CS or DS select Backfill per Item 423.2.4.2 or Drainage Aggregate per Item 423.2.4.3.
3. Adjust depth of removal as required for excavation of existing abutment.
4. Tool concrete to ¼" radius
5. Pre-cut interface in preformed butuminous fiber sheet. Bond lower portion of fiber sheet to cured concrete backwall. Place ACP against fiber sheet. Remove 1" depth of fiber sheet and infill with Class 5 sealant per DMS-6310 "Bond Sealants and Fillers".

THE FUTURE: SEAMLESS BRIDGES WITH CONCRETE PAVEMENT

Seamless Bridges with Concrete Pavement

- NO JOINT between CRCP and bridge deck/approach slab
- Concept from Australia
  - First used in 2004
  - Used on over 50 bridge locations
  - WM7 Motorway in Sydney
- Benefits
  - Reduced maintenance
  - Improved rideability
  - Reduced noise
  - Reduced bridge substructure longitudinal load demand
  - Simplified drainage
  - Simplified construction

Source
"Actual Performance of Seamless Pavements in Australia"
Griffiths, Steve and Bowmaker, Geoff (AECOM Australia)
25th ARRB Conference – Shaping the future: Linking policy, research, and outcomes, Perth, Australia (2012)

Seamless Bridges and Concrete Pavement: Design Concept

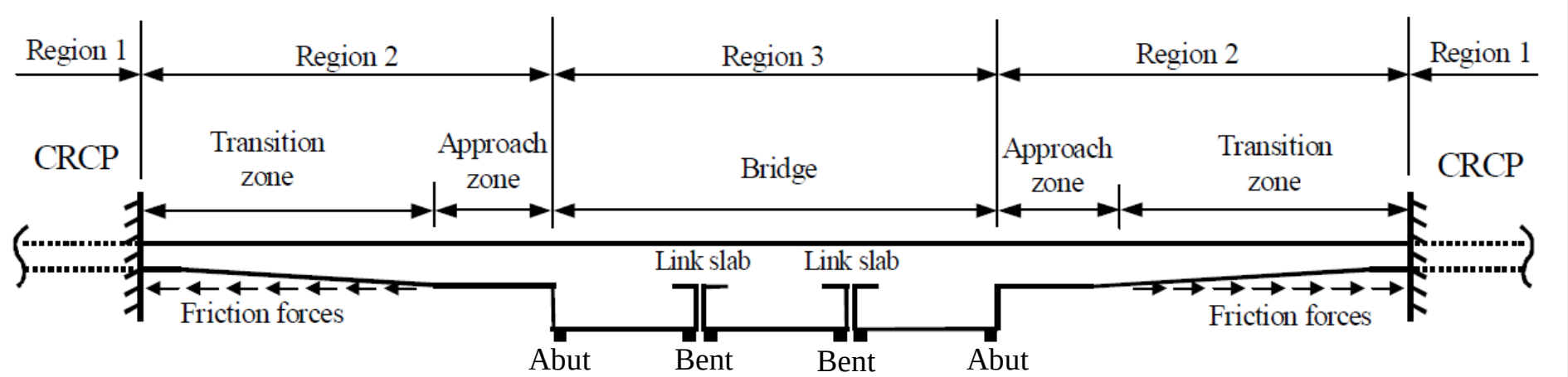

- Transition Zone designed for
  - Longitudinal effects from shortening and lengthening of pavement and bridge
  - Differential embankment settlements near bridge abutments
  - Applied traffic loads
- Serviceability performance most critical case
  - Significant overload reserve in continuous pavement

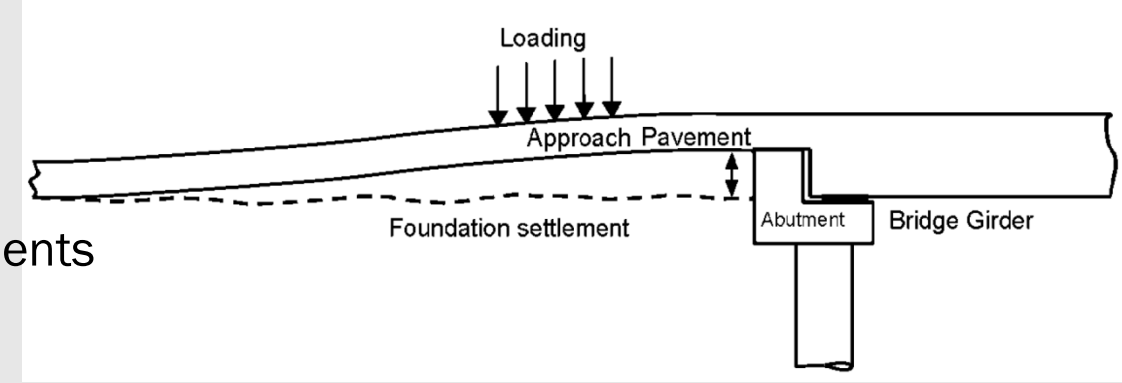

Source
"Actual Performance of Seamless Pavements in Australia"
Griffiths, Steve and Bowmaker, Geoff (AECOM Australia)
25th ARRB Conference – Shaping the future: Linking policy, research, and outcomes, Perth, Australia (2012)

Seamless Bridges and Concrete Pavement: Design Aspects

- Example Case: 400 ft Total Length Bridge
  - With μ = 0.5, Maximum Tension Case 55 kips/ft and 400 ft Pavement Effect Each Side
  - With μ = 1.5, Maximum Tension Case 270 kips/ft and 300 ft Pavement Effect Each Side
  - With 0.75" settlement, Maximum Moment 26 kip-ft/ft
  - With 4" settlement, Maximum Moment 56 kip-ft/ft

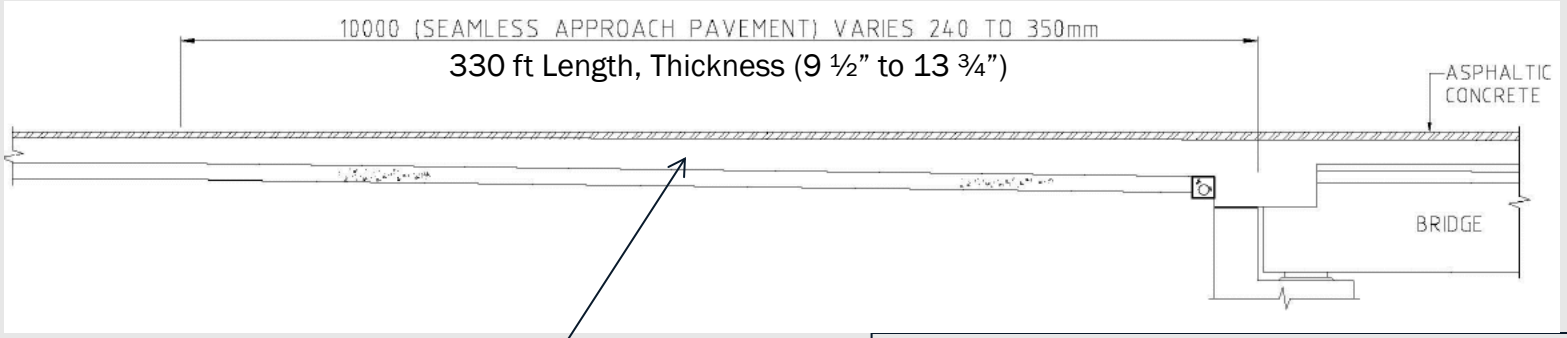

Densely reinforced

Source
"Actual Performance of Seamless Pavements in Australia"
Griffiths, Steve and Bowmaker, Geoff (AECOM Australia)
25th ARRB Conference – Shaping the future: Linking policy, research, and outcomes, Perth, Australia (2012)

Seamless Bridges and Concrete Pavement: Construction

Subgrade Preparation

Reinforcing Placement

Source
"The Elimination of Deck Joints – Seamless Pavements"
Griffiths, Steve (AECOM Australia)
TxDOT/CCT Concrete Conference, Austin, TX (March 2018)

Seamless Bridges and Concrete Pavement: Construction

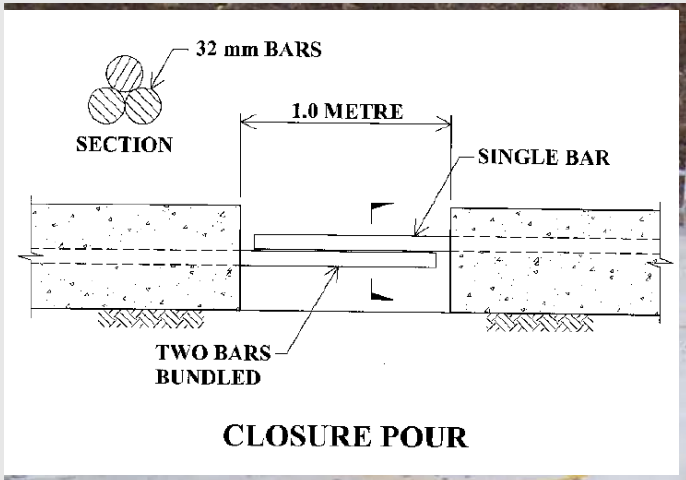

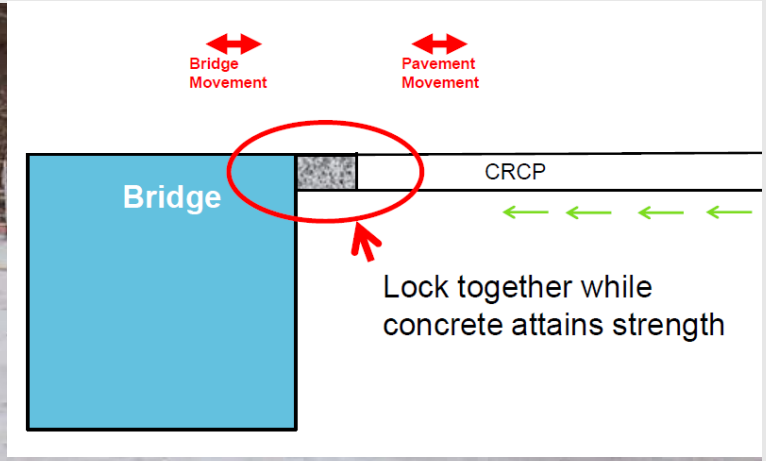

Source
"The Elimination of Deck Joints – Seamless Pavements"
Griffiths, Steve (AECOM Australia)
TxDOT/CCT Concrete Conference, Austin, TX (March 2018)

Seamless Bridges and Concrete Pavement: Performance

- Range of Types Implemented on WM7 Motorway
- Performance from Service Inspections

Approach Pavement Type	Height of approach embankment	No. of Bridges	No. of approaches with settlement		No of approaches with perceptible "bump"	
Seamless	0 – 5 m	26	10	38%	0	0%
	5 – 10 m	24	4	17%	1	4%
		50	**14**	**28%**	**1**	**2%**
Anchored CRCP	0 – 5 m	7	2	29%	1	14%
	5 – 10 m	9	4	44%	2	22%
	10 – 15 m	2	2	100%	2	100%
		18	**8**	**44%**	**5**	**28%**
Flexible	0 – 5 m	8	3	38%	2	25%
	5 – 10 m	6	5	83%	5	83%
	10 – 15 m	3	3	100%	3	100%
	15 – 20 m	1	1	100%	1	100%
		18	**12**	**67%**	**11**	**61%**

Conventional Techniques

1 m = 0.3048 ft

Source
"Actual Performance of Seamless Pavements in Australia"
Griffiths, Steve and Bowmaker, Geoff (AECOM Australia)
25th ARRB Conference – Shaping the future: Linking policy, research, and outcomes, Perth, Australia (2012)

Seamless Bridges and Concrete Pavement: Implementation?

- Potential Research Topic
- Find a Trial Project
  - Ideally rural interstate reconstruction with CRCP and bridge replacements
  - Areas exposed to deicing salts
  - Contact BRG PM and Kevin Pruski
    - Engage Geotech/CST/MNT

Summary

- Jointless Bridges Still in Infancy at TxDOT
- Incorporating Semi-Integral Abutment Concepts on Trial TxDOT Projects
- Research Project 6936 Will Provide Guidance
- Jointless Bridges will be Key Tool for Long Term Durability
- True Seamless Bridges with CRCP May Be the Future

Questions?

Does integrating superstructure with abutments, eliminate longitudinal force from design consideration?

It does not eliminate longitudinal force design, but does change the manner in which it is resisted. Longitudinal forces get directed into the abutment backfill and approach slab (if present) in semi-integral abutment bridges, and into both the abutment and backfill in fully integral abutment bridges. In theory, it could reduce the longitudinal force demand in interior bents (and shift these to the abutments), but the distribution of longitudinal force depends on the relative stiffness of substructure elements, soil reaction, and bearings.

Is there a positive connection between the girder and the diaphragm in this example?

Yes, projecting strands and passive reinforcing from the back of the TxGirder extend into the semi-integral backwall/diaphragm. The passive reinforcement uses hooked bars due to the limited wall depth. The end of the beam embeds approximately 1 to 2” into the backwall.

For Seamless Bridges and for inventory purposes, where is the beginning and end of bridge structure defined?

The bridge begins/ends at the back of the semi-integral diaphragm.

Questions?

How is the reduction in axial capacity of the piles accounted for in fully integral abutment due to cyclic expansion and contraction of the bridge superstructure?

There are two aspects that would have influence on the piles in fully integral abutments. Structurally, the piles would be exposed to both axial and flexural loads requiring an interaction analysis. Due to their flexibility and resistance to flexural load reversals, steel H-piles are typically preferred in such an application. Geotechnically, the upper regions of the piles would experience some reduction in skin friction due to induced movement. The TxDOT Geotechnical Manual by default recommends a 5 ft disregard depth for piling at abutments. A soil-structure interaction model could help determine if this disregard depth should be increased. In semi-integral abutments, this is less of an issue because the superstructure/integral backwall are not physically connected, except for the bearings.

Has leaving the upturn off SEJ ever been considered? We have issue with the SEJ filling with sediment and holding water on the roadway (not to mention causing the joints to fail).

No, but we can look into it. The downside of eliminating the upturn is the drainage and corrosion potential that would be increased at the edges and elements below.

Questions?

- Copyright 2018 • Texas Department of Transportation • All Rights Reserved
- Entities or individuals that copy and present state agency information must identify the source of the content, including the date the content was copied. Entities or individuals that copy and present state agency information on their websites must accompany that information with a statement that neither the entity or individual nor the information, as it is presented on its website, is endorsed by the State of Texas or any state agency. To protect the intellectual property of state agencies, copied information must reflect the copyright, trademark, service mark, or other intellectual property rights of the state agency whose protected information is being used by the entity or individual. Entities or individuals may not copy, reproduce, distribute, publish, or transmit, in any way this content for commercial purposes. This presentation is distributed without profit and is being made available solely for educational purposes. The use of any copyrighted material included in this presentation is intended to be a “fair use” of such material as provided for in Title 17 U.S.C. Section 107 of the US Copyright Law.