Texas Department of Transportation
Book 2 – Technical Provisions

US 77 UPGRADE FROM KINGSVILLE TO DRISCOLL PROJECT

Attachment 15-1
Aesthetic Guidelines

Bishop Centennial Logo:

Bridge, Wall, and Misc Aesthetics Treatments:

The aesthetics treatments shall be as required by Section 15 of the Technical Specifications and as shown on the attached drawings. These example drawings are provided as an aid in depicting aesthetic concepts to be used at intersecting streets, bridges over stream crossings are exempted from these requirements. DB Contractor shall develop final US77 project aesthetic plans and submit to TxDOT for review.

Substitute Terracotta and Buff shown on the sample drawings with Tan (HC136 Aztec Sand) and Dark Chocolate (HC117 Silk Chocolate) colors.

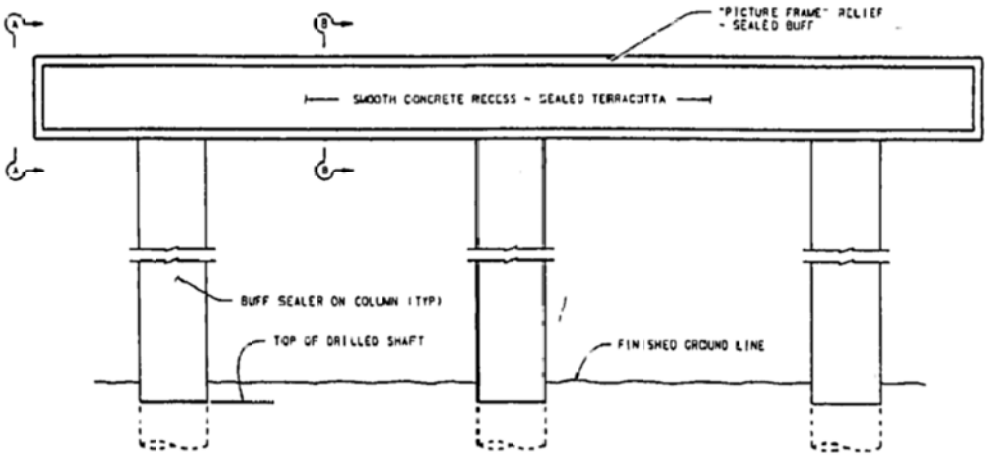

ELEVATION ~ ROUND COLUMNS

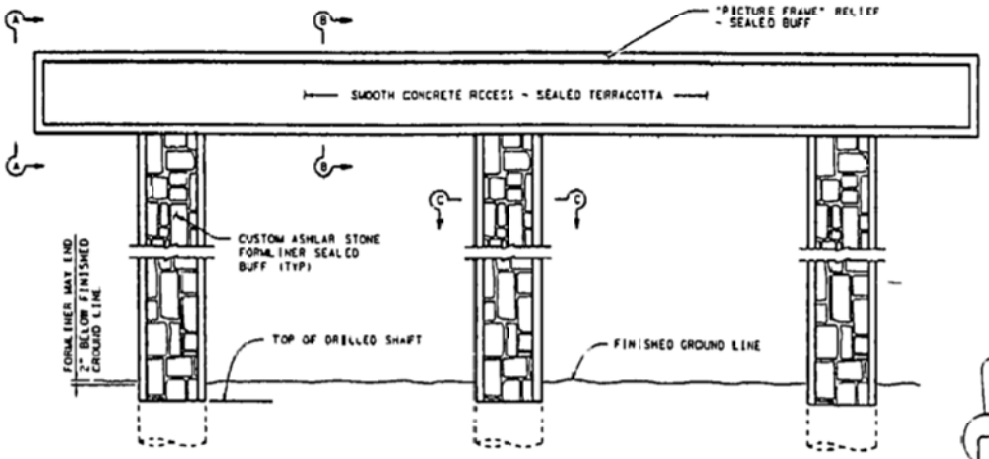

ELEVATION ~ SQUARE COLUMNS

GENERAL NOTES:
1. CHAMFER ALL EXPOSED CAP EDGES ¾".
2. FOR ASHLAR STONE FORM LINER DETAILS SEE AEST4(SPL)(BRS-109) SHEET.
3. THE TERRACOTTA SEALER SHALL CONFORM TO THE FEDERAL STANDARD COLOR I.D. NO. 30252.
4. THE BUFF SEALER SHALL CONFORM TO THE FEDERAL STANDARD COLOR I.D. NO. 33711
5. SEALER SHALL NOT BE APPLIED TO THE BEARING SEATS

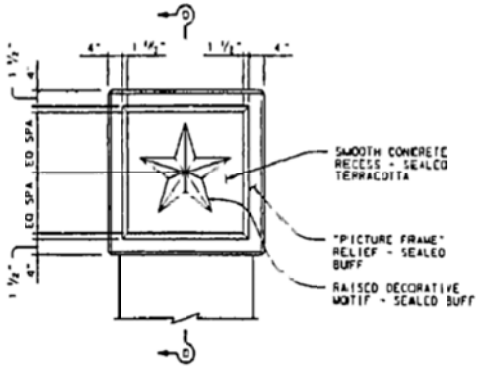

SECTION A-A
SHOWING ROUND COLUMN

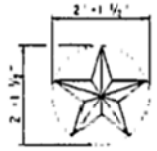

STAR DETAIL
1 ½" RAISED STAR MOTIF INSCRIBED BY A 2'-1 ½" DIAMETER CIRCLE.

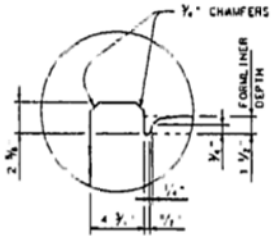

CUSTOM ASHLAR FORMLINER DETAIL

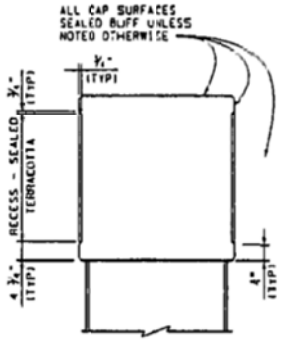

SECTION B-B
SHOWING SQUARE COLUMN

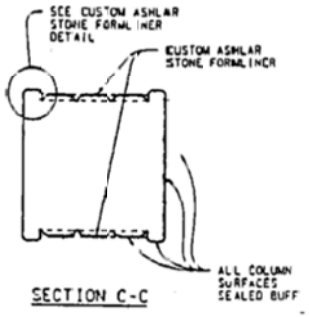

SECTION C-C

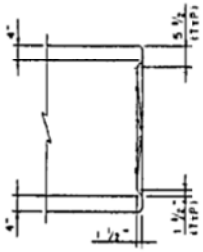

SECTION D-D

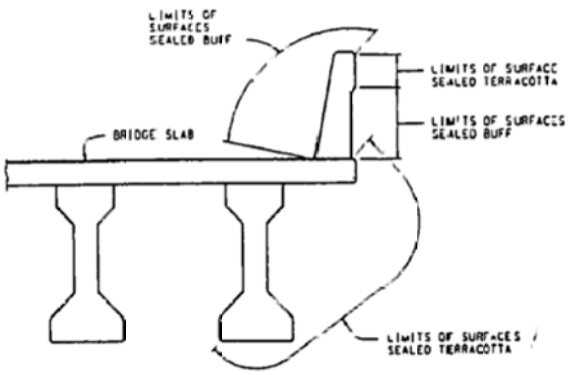

COLOR OPTION "A"

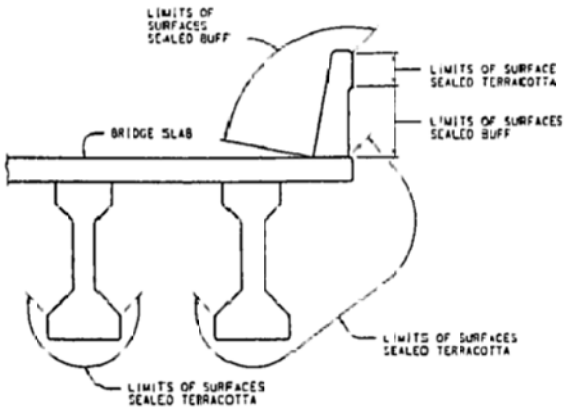

COLOR OPTION "B"

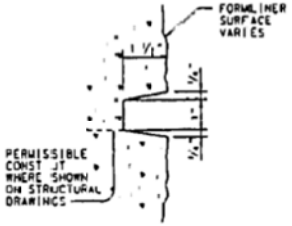

DETAIL A

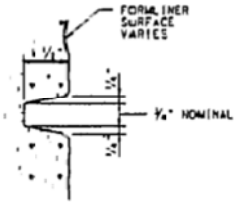

DETAIL B

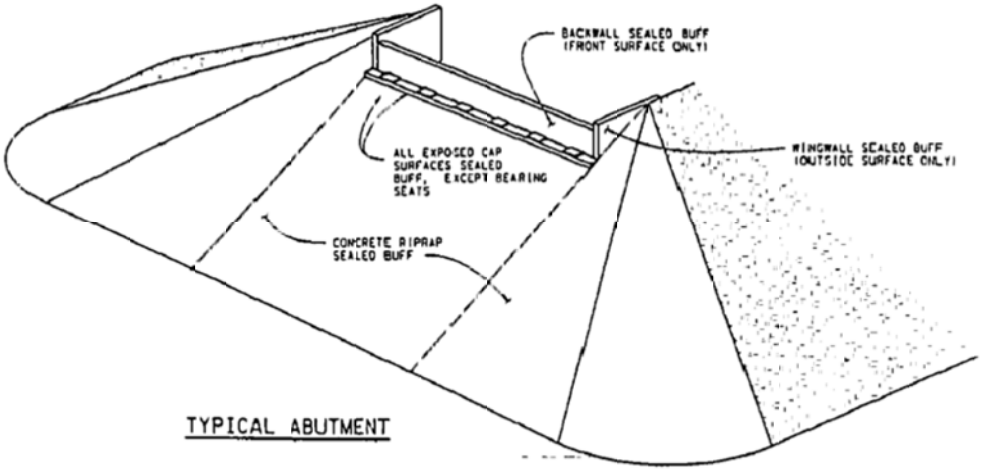

TYPICAL ABUTMENT

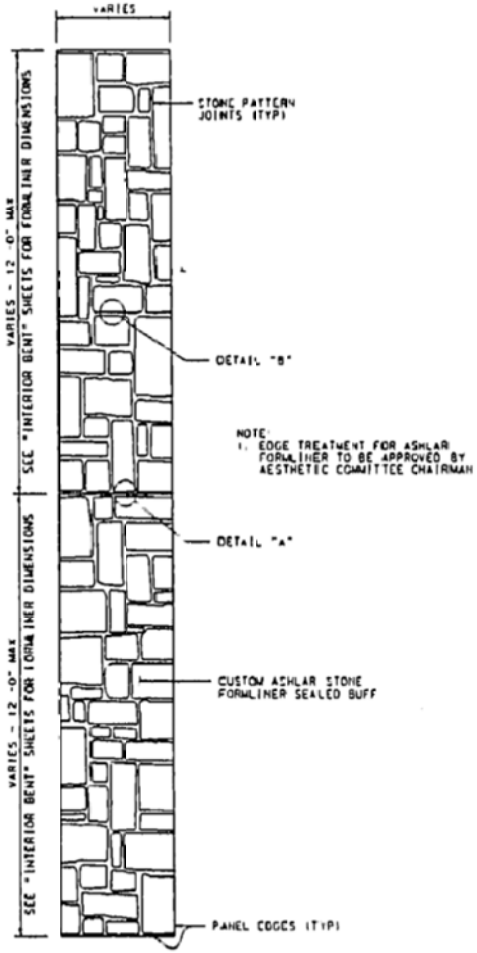

NOTE:
1. EDGE TREATMENT FOR ASHLAR FORMLINER TO BE APPROVED BY AESTHETIC COMMITTEE CHAIRMAN

CUSTOM ASHLAR STONE FORMLINER PANEL
FOR BENTS AND SIGN BRIDGE COLUMNS

GENERAL NOTES:
1. THE FABRICATOR SHALL NOT SPLICE, CUT AND JOIN, OR GLUE THE FORMLINER PANELS TOGETHER. EACH PANEL SHALL BE FABRICATED TO FORM A ONE PIECE UNIT TO THE SIZE AND SPECIFICATIONS SET FORTH IN THE PLAN SHEETS. FORMLINERS SHALL BE WASHED AND CLEANED AFTER EACH USE. FORMLINERS THAT HAVE BECOME DAMAGED OR WORN SHALL BE REPLACED BY THE CONTRACTOR.
2. ALL FORMLINER SURFACES SHALL RECEIVE A SURFACE AREA 1, CLASS B FINISH USING OPAQUE CONCRETE SEALER AS NOTED IN SPECIAL PROVISION.
3. ALL FORMLINER PANEL JOINTS SHALL BE SEALED IN A MANNER ACCEPTABLE TO THE ENGINEER, TO PREVENT LEAKAGE AT THE SURFACE UPON CASTING OF CONCRETE.
4. CHAMFER ALL EXPOSED CAP EDGES 7/8".
5. THE TERRACOTTA SEALER SHALL CONFORM TO THE FEDERAL STANDARD COLOR I.D. NO. 30252.
6. THE BUFF SEALER SHALL CONFORM TO THE FEDERAL STANDARD COLOR I.D. NO. 33711.

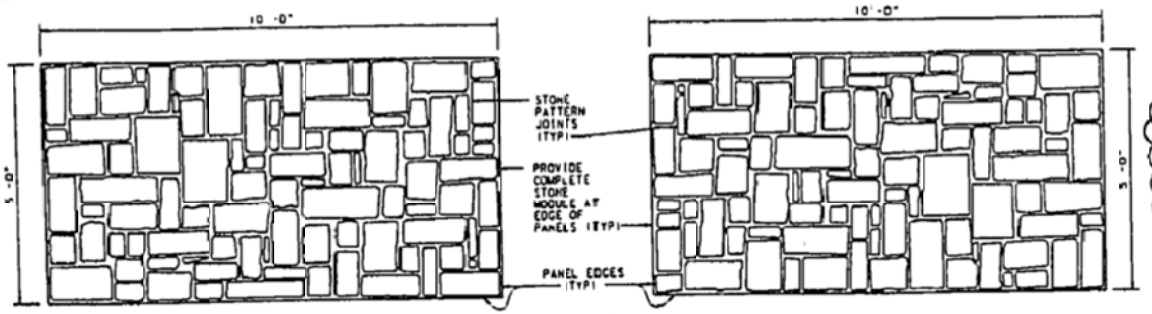

PANEL 1

PANEL 3 (PANEL 1 INVERTED)

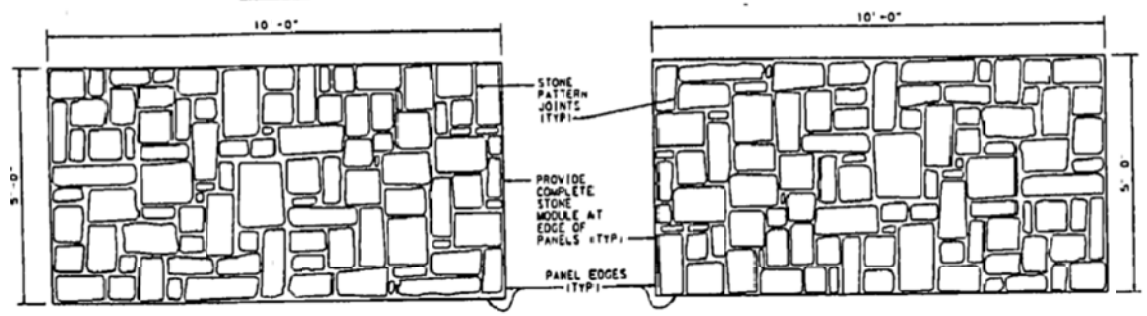

PANEL 2

PANEL 4 (PANEL 2 INVERTED)

CUSTOM ASHLAR FORMLINER FOR MSE AND CIP WALLS

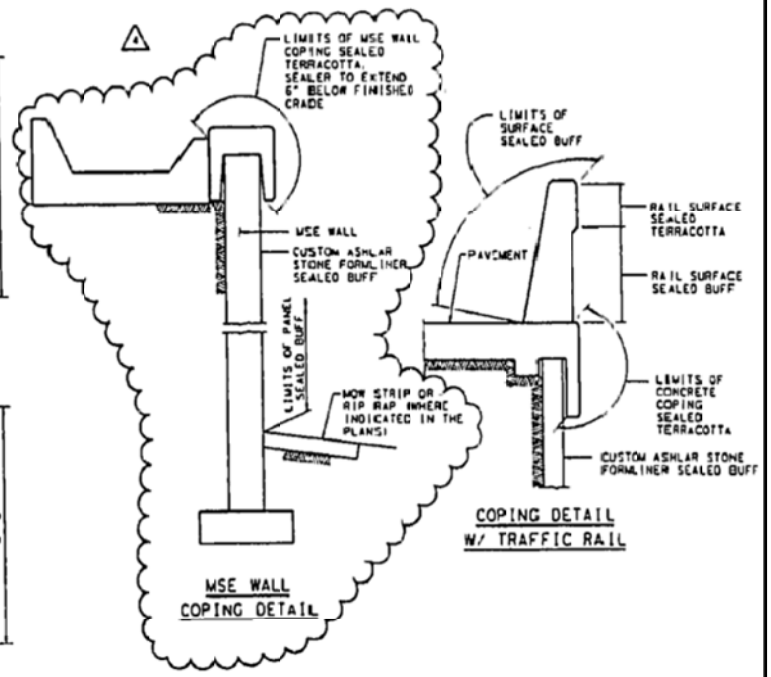

MSE WALL COPING DETAIL

COPING DETAIL W/ TRAFFIC RAIL

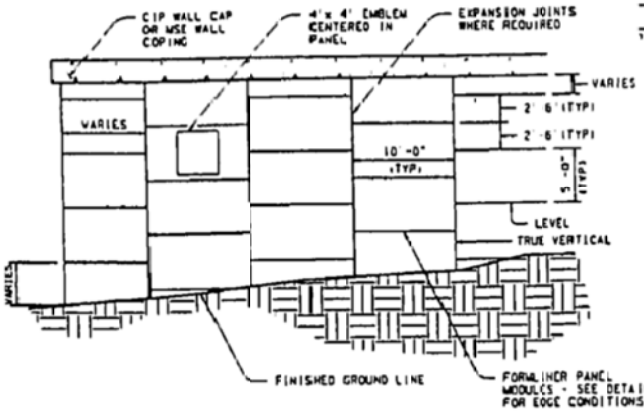

WALL FORMLINER ELEVATION

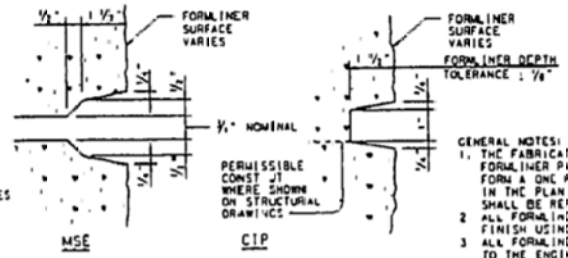

PANEL EDGES

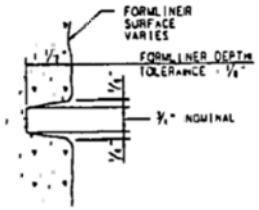

STONE PATTERN JOINTS

GENERAL NOTES:

1. THE FABRICATOR SHALL NOT SPLICE, CUT AND JOIN, OR GLUE THE FORMLINER PANELS TOGETHER. EACH PANEL SHALL BE FABRICATED TO FORM A ONE PIECE UNIT TO THE SIZE AND SPECIFICATIONS SET FORTH IN THE PLAN SHEETS. FORMLINERS THAT HAVE BECOME DAMAGED OR WORN SHALL BE REPLACED BY THE CONTRACTOR.
2. ALL FORMLINER SURFACES SHALL RECEIVE A SURFACE AREA 1, CLASS B FINISH USING OPAQUE CONCRETE SEALER AS NOTED IN SPECIAL PROVISION
3. ALL FORMLINER PANEL JOINTS SHALL BE SEALED IN A MANNER ACCEPTABLE TO THE ENGINEER OF RECORD, TO PREVENT LEAKAGE AT THE SURFACE UPON CASTING OF CONCRETE.
4. PANEL DIMENSIONS INDICATED ARE NOMINAL AND SUBJECT TO FINAL APPROVAL OF THE ENGINEER OF RECORD
5. AN APPROXIMATELY EQUAL NUMBER OF PANELS SHALL BE PRODUCED AND RANDOMLY PLACED ON THE RETAINING WALL. CARE SHOULD BE TAKEN TO AVOID:
   IN WALLS COMPOSED OF A NON-STAGGERED SINGLE ROW OF PANELS, NO TWO ADJACENT HORIZONTAL PANELS SHALL BE OF THE SAME (ASHLAR STONE PATTERN) TYPE.
   IN WALLS CONTAINING MULTIPLE ROWS OF STAGGERED PANELS, NO TWO FULL SIZE VERTICALLY ADJACENT PANELS INCORPORATED IN THE SAME (VERTICAL PANEL BAYIOR LINE) SHALL BE OF THE SAME (ASHLAR STONE PATTERN) TYPE.
   DEVIATIONS TO THIS PANEL PLACEMENT PROTOCOL ARE SUBJECT TO THE APPROVAL OF TxDOT.
6. CHAMFER ALL EXPOSED CAP EDGES 3/4".
7. THE TERRA COTTA SEALER SHALL CONFORM TO THE FEDERAL STANDARD COLOR I.D. NO. 30252.
8. THE BUFF SEALER SHALL CONFORM TO THE FEDERAL STANDARD COLOR I.D. NO. 33711.
9. CORNER ELEMENTS FOR THIS PROJECT SHALL HAVE A PLAIN SMOOTH FINISH.
10. PANELS WILL BE CAST WITH NON-COLORED CONCRETE AND WILL NOT RECEIVE A SANDBLAST TREATMENT

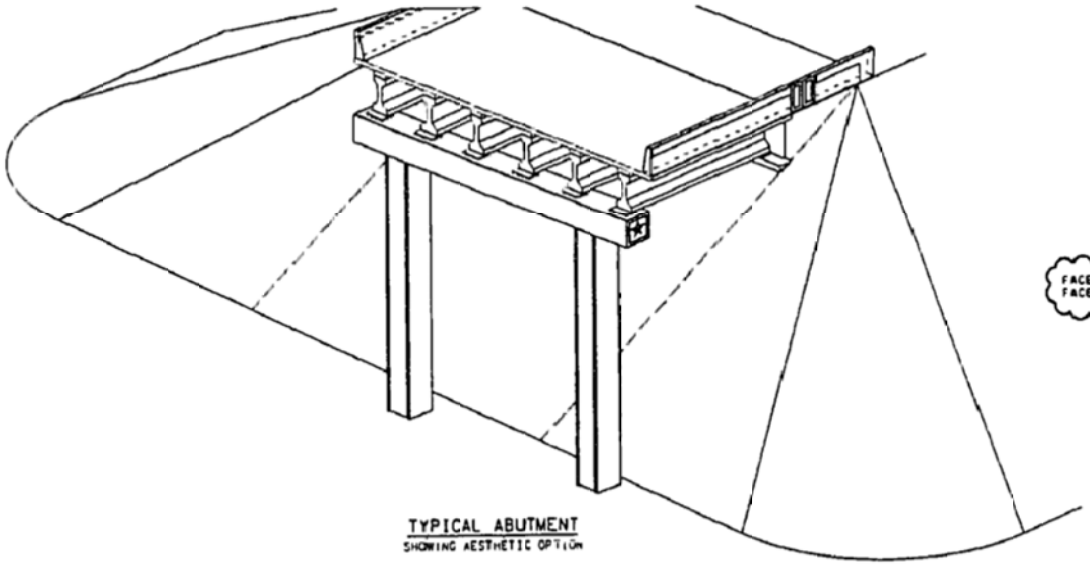

TYPICAL ABUTMENT
SHOWING AESTHETIC OPTION

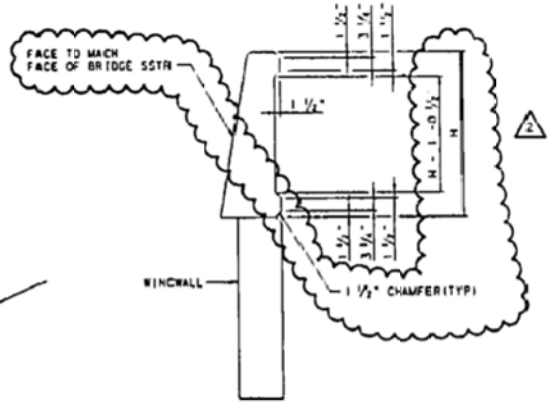

SECTION A-A

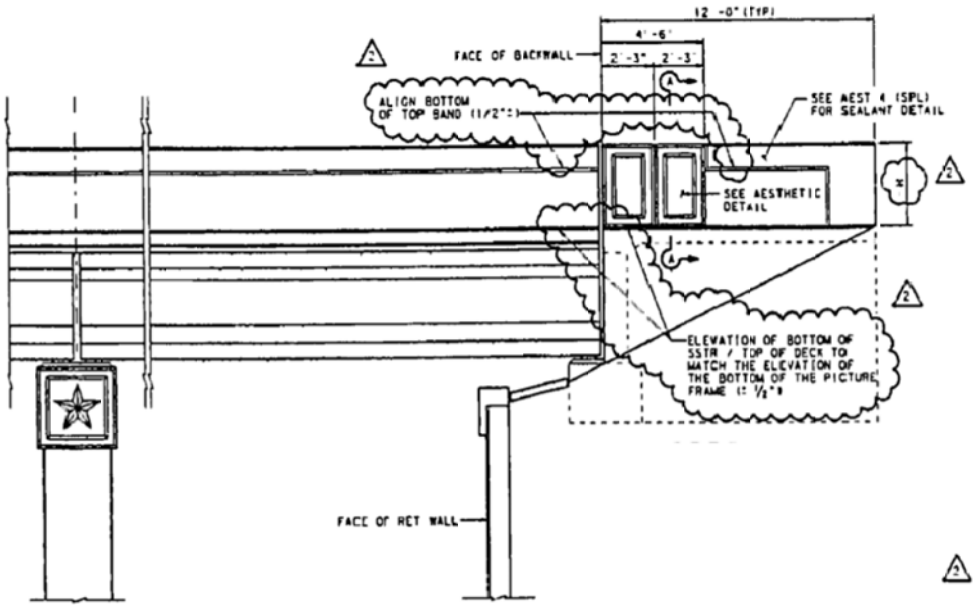

ABUTMENT ELEVATION

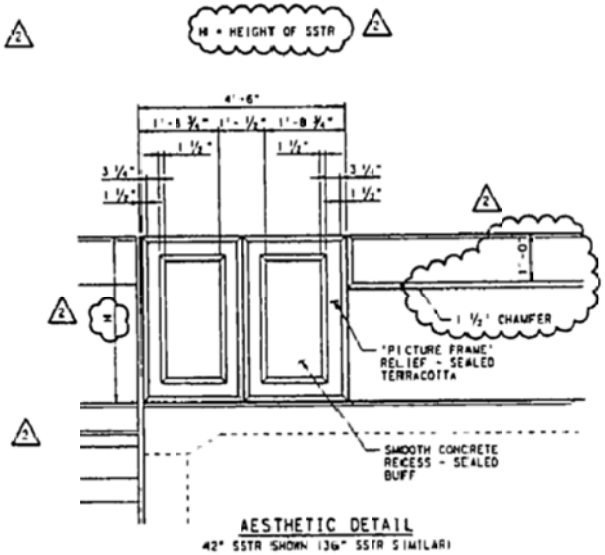

AESTHETIC DETAIL
42" SSTR SHOWN (36" SSTR SIMILAR)

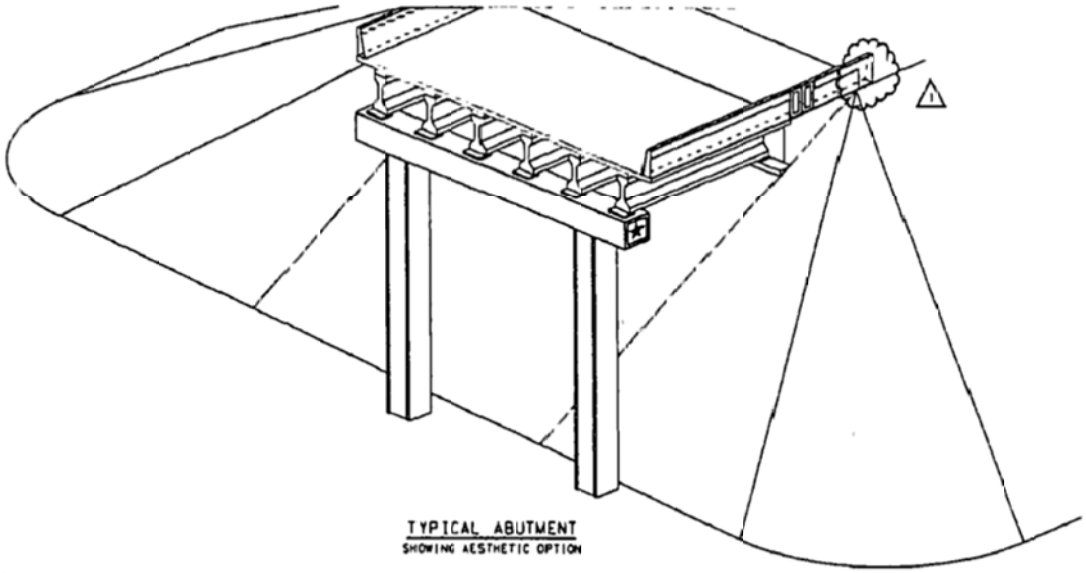

TYPICAL ABUTMENT
SHOWING AESTHETIC OPTION

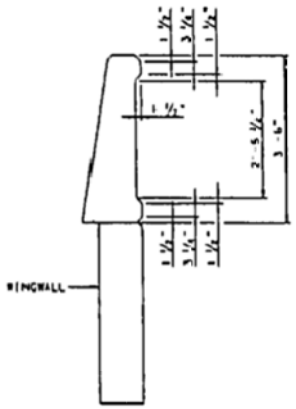

SECTION A-A
42" SSTR SHOWN (36" SSTR SIMILAR)

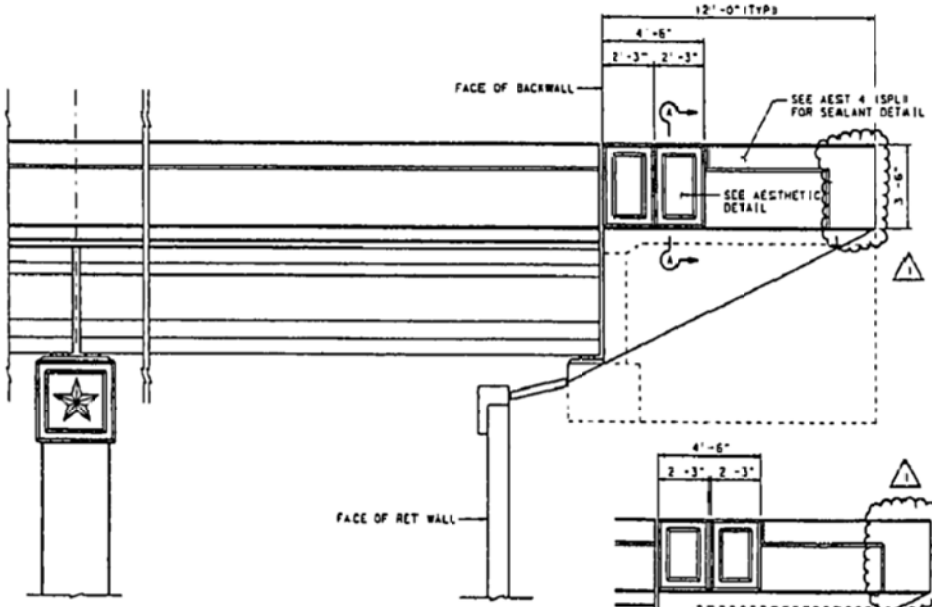

ABUTMENT ELEVATION
42" SSTR SHOWN

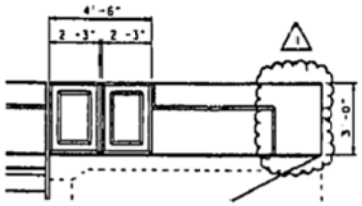

36" SSTR RAIL OPTION

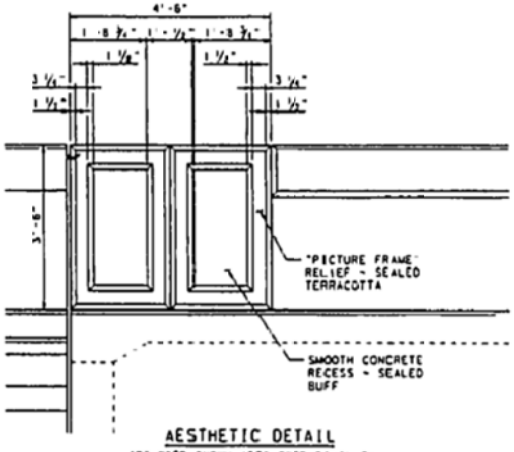

AESTHETIC DETAIL
42" SSTR SHOWN (36" SSTR SIMILAR)