ugarte
8:05:44 AM 1/29/2011

DESIGN	FED.RD. DIV.NO.	FEDERAL AID PROJECT NO.		HIGHWAY NO.
CEQ	6	STP 2009(XXX)MM		IH 30
GRAPHICS MTU	STATE	DISTRICT	COUNTY	SHEET NO.
CHECK CEQ	TEXAS	DALLAS	DALLAS	1
CHECK	CONTROL	SECTION	JOB	
	1068	04	116	

FINAL PLANS

NAME OF CONTRACTOR: _____

DATE OF LETTING: _____

DATE WORK BEGAN: _____

DATE WORK COMPLETED: _____

DATE WORK ACCEPTED: _____

SUMMARY OF CHANGE ORDERS:

STATE OF TEXAS
DEPARTMENT OF TRANSPORTATION

PLANS OF PROPOSED
STATE HIGHWAY IMPROVEMENT

FEDERAL AID PROJECT

STP 2009 (XXX) MM

CSJ: 1068-04-116

IH 30 AT TRINITY RIVER
DALLAS COUNTY

LIMITS: FROM: AT TRINITY RIVER, WEST OF TRINITY RIVER
TO: EAST OF TRINITY RIVER

TOTAL LENGTH OF PROJECT =				
ROADWAY =	000.00 FT.	= 0.000	MI.
BRIDGE =	1,125.00 FT.	= 0.213	MI.
TOTAL =	1,125.00 FT.	= 0.213	MI.

TYPE: FOR THE CONSTRUCTION OF A NEW BRIDGE FACILITY

CONSISTING OF: STRUCTURES, DRAINAGE, AND ILLUMINATION

FRONTAGE ROAD DESIGN SPEED = 40 MPH

IH 30 WBFR ADT (2006) = N/A
IH 30 WBFR ADT (2006) = 8,000
IH 30 EBFR ADT (2006) = N/A
IH 30 EBFR ADT (2006) = 8,000

NOTE:

SPECIFICATIONS ADOPTED BY THE TEXAS DEPARTMENT OF TRANSPORTATION, JUNE 1, 2004, AND THE CONTRACT PROVISIONS LISTED AND DATED AS FOLLOWS SHALL GOVERN ON THIS PROJECT: REQUIRED CONTRACT PROVISIONS FOR ALL FEDERAL-AID CONSTRUCTION CONTRACTS (FORM FHWA 1273, MARCH,2004).

TDLR INSPECTION REQUIRED

RFQ SUBMITTAL

PRELIMINARY

NOT FOR CONSTRUCTION, BIDDING, OR PERMIT PURPOSES.

PREPARED UNDER THE SUPERVISION OF CHARLES E. QUADE P.E. #69396 11/29/2011

HUITT-ZOLLARS, INC.
FIRM REGISTRATION NO. F-761

END PROJECT
CSJ 1068-04-116
IH 30 STA 1078+95.00
TRM XXX

BEGIN PROJECT
CSJ 1068-04-116
IH 30 STA 1067+70.00
TRM XXX

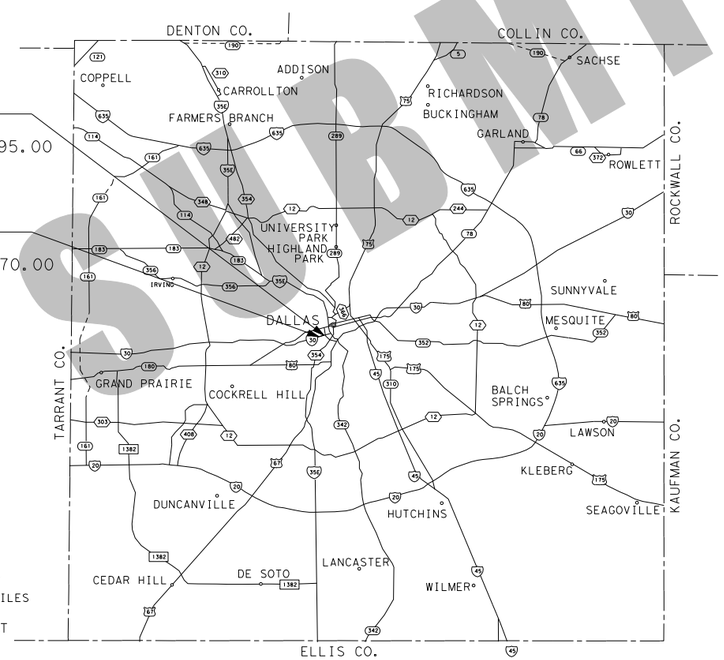

DALLAS COUNTY
SCALE 0 1 2 3 4 MILES
DALLAS DISTRICT

SANTIAGO CALATRAVA
ARCHITECT & ENGINEER

City Of Dallas

HUITT-ZOLLARS
Huitt-Zollars, Inc.
1717 McKinney Avenue,
Dallas, Texas
Dallas
Suite 1400
75202-1236

TEXAS DEPARTMENT OF TRANSPORTATION

SUBMITTED FOR LETTING 20	SUBMITTED FOR LETTING 20
, P.E.	, P.E.
PROJECT DIRECTOR (SANTIAGO CALATRAVA, LLC)	DESIGN ENGINEER (HUITT-ZOLLARS, INC.)
RECOMMENDED FOR LETTING 20	RECOMMENDED FOR LETTING 20
, P.E.	, P.E.
AREA ENGINEER	CITY OF DALLAS
RECOMMENDED FOR LETTING 20	RECOMMENDED FOR LETTING 20
, P.E.	, P.E.
DIRECTOR OF TRANSPORTATION PLANNING & DEVELOPMENT	DIRECTOR, TRAFFIC OPERATIONS DIVISION
RECOMMENDED FOR LETTING 20	APPROVED FOR LETTING 20
, P.E.	, P.E.
DISTRICT ENGINEER	DIRECTOR, DESIGN DIVISION

WORK WAS COMPLETED ACCORDING TO THE PLANS AND CONTRACT.

_____ , P.E.
Signature of Registrant & Date

NO EQUATIONS
NO EXCEPTIONS
NO RAILROADS

© 2011 by Texas Department of Transportation; all rights reserved

RFQ SUBMITTAL

ugarte
8:04:20 AM 11/29/2011

INDEX OF SHEETS

GENERAL PLANS

1	TITLE SHEET
2	INDEX OF SHEETS
P-0001	GENERAL NOTES
P-0002	GENERAL NOTES - DRILLED SHATS AND CABLES
P-0003	GENERAL NOTES - CONSTRUCTION NOTES
P-0004	GENERAL NOTES - FLOOD EMERGANCY OPERATION PLAN
P-0005	SITE PLAN
P-0006	SCLLC PROJECT REFERENCE PLAN
P-0010	ALIGNMENT OVERVIEW & PROJECT LIMITS
P-0020	PRINCIPAL ELEVATION & PLAN VIEW
P-0030	LONGITUDINAL & HORIZONTAL PRINCIPAL SECTIONS
P-0040	PRINCIPAL CROSS SECTION AXIS 0
P-0100	PROJECT HEIGHTS + FLOOD LEVEL

EASTBOUND BRIDGE

EP-01010	(INDICATIVE) CROSS SECTION AXIS 0
EP-01020	CROSS SECTION BETWEEN AXES 0 & 1
EP-01030	CROSS SECTION AT BEARING
EP-01040	CROSS SECTION AT BRIDGE DECK PIER SUPPORT

EASTBOUND BRIDGE FOUNDATION PLANS

EP-03100	OVERVIEW PLAN FOUNDATIONS

EASTBOUND BRIDGE CONCRETE PLANS

EP-04100	OVERVIEW PLAN CONCRETE
EP-04101	CONCRETE ELEVATION

EASTBOUND BRIDGE STEEL PLANS OVERVIEW

EP-05001	STEELWORK ELEVATION DECKS
EP-05005	STEELWORK FRAMING PLAN 1
EP-05006	STEELWORK FRAMING PLAN 2
EP-05007	STEELWORK FRAMING PLAN 3
EP-05008	STEELWORK FRAMING PLAN 4
EP-05009	STEELWORK FRAMING PLAN 5
EP-05010	STEELWORK FRAMING PLAN 6
EP-05011	STEELWORK FRAMING PLAN 7
EP-05020	STEELWORK TYPICAL CROSS SECTION

LONGITUDINAL STRINGERS

EP-05420	STRINGER TYPE 1 (DECK SUPPORT) DETAIL

ARCH

EP-05701	ARCH OVERVIEW PLAN AND ELEVATION
EP-05702	ARCH GEOMETRY 1
EP-05703	ARCH GEOMETRY 2

BEARINGS & MOVEMENT JOINTS OVERVIEW

EP-05810	BEARING ASSEMBLY TYPE 1 - MULTIDIRECTIONAL BEARING
EP-05820	BEARING ASSEMBLY TYPE 2 - SPHERICAL BEARING
EP-05830	BEARING ASSEMBLY TYPE 3 - GUIDED SLIDING BEARING
EP-05840	BEARING ASSEMBLY TYPE 4 - FIXED PIN BEARING

EASTBOUND BRIDGE CABLE PLANS

EP-06100	CABLE HANGERS OVERVIEW - ELEVATIONS
EP-06101	CABLE HANGERS OVERVIEW - SECTION
EP-06102	CABLE LENGTH 1
EP-06103	CABLE LENGTH 2
EP-06104	CABLE ANGLES

EASTBOUND BRIDGE DETAILS

EP-07100	GUARDRAIL -OVERVIEW (ELEVATION AND SCHEDULE)
EP-07110	GUARDRAIL - TYPICAL DETAILS

PAVEMENT

EP-08100	PAVEMENT ON TRAFFIC DECK OVERVIEW
EP-08300	PAVEMENT CYCLE TRACK DECK OVERVIEW

EASTBOUND BRIDGE TRAFFIC PLANS

EP-10100	ALIGNMENT OVERVIEW & PROJECT LIMITS
EP-10110	EASTBOUND BRIDGE - EAST BOUND ALIGNMENT 1
EP-10111	EASTBOUND BRIDGE - EAST BOUND ALIGNMENT 2

ILLUMINATION

EP-13101	FUNCTIONAL ILLUMINATION OVERVIEW

DRAINAGE

EP-14100	DRAINAGE OVERVIEW

RFQ SUBMITTAL

PRELIMINARY

NOT FOR CONSTRUCTION, BIDDING, OR PERMIT PURPOSES.

PREPARED UNDER THE SUPERVISION OF
CHARLES E. QUADE P.E. #69396
11/29/2011

HUITT-ZOLLARS, INC.
FIRM REGISTRATION NO. F-761

HL 93 LOADING

IH 30

INDEX OF SHEETS

SCALE: N/A

SHEET 1 OF 1

CITY OF DALLAS

©2011 Texas Department of Transportation

SANTIAGO CALATRAVA
ARCHITECT & ENGINEER

HUITT-ZOLLARS
Huitt-Zollars, Inc.
1717 McKinney Avenue, Suite 1400
Dallas, Texas 75202-1236

Designed: CEQ	FED. RD. DIV. NO.	STATE	FEDERAL AID PROJECT NO.				HIGHWAY NO.
Checked: CEQ	6	TEXAS	SEE TITLE SHEET				IH 30
Drawn: MTU	DIST.	COUNTY		CONTROL NO.	SECTION NO.	JOB NO.	SHEET NO.
Checked: CEQ	DAL	DALLAS		1068	04	116	2

I:\PROj\01325140\dgn\sheets\325140-GIN01 RFQ.dgn
8:04:20 AM

GENERAL

1. THESE STRUCTURAL NOTES ARE FOR THE WB AND EB FRONTAGE ROAD TIED–ARCH MAIN SPAN STRUCTURES ALTHOUGH PORTIONS OF THESE NOTES MAY BE APPLICABLE TO THE OTHER TxDOT BRIDGE SPANS AS WELL.

2. THE WB AND EB FRONTAGE ROAD TIED–ARCH MAIN SPAN PORTION OF THE BRIDGES CONSISTS OF:

2 – TRANSITION BENTS	SPECIAL DESIGN
4 – INTERIOR BENTS	SPECIAL DESIGN
1 – STEEL TIED–ARCH	SPECIAL DESIGN
1 – 1125'– 0" TIED–ARCH UNIT	SPECIAL DESIGN

3. THIS PROJECT CONTAINS MANY SHOP AND FIELD CONNECTIONS INCLUDING WELDED AND BOLTED JOINT DETAILS. IT IS RECOGNIZED THAT THERE ARE OTHER SUITABLE DETAILS DEPENDING ON THE FABRICATOR, METHOD OF ERECTION AND OTHER FACTORS. PROPOSED ALTERNATIVE DETAILS BY THE SUCCESSFUL BIDDER MAY BE PREFERRED TO THE CONSTRUCTION DETAILS INDICATED IN THE PLANS. THE CONTRACTOR MAY PROPOSE ALTERNATE DETAILS FOR THE STRUCTURAL STEEL CONNECTIONS SHOWN IN THESE PLANS. ACCEPTANCE OF THESE DETAILS IS SUBJECT TO THE ENGINEERS/ARCHITECTS REVIEW AND APPROVAL

PLANS

1. ALL DIMENSIONS SHOWN ARE EITHER HORIZONTAL OR VERTICAL AFTER ALL DEAD LOADS ARE APPLIED AND THE STRUCTURE IS COMPLETE, AT MEAN TEMPERATURE, UNLESS NOTED OTHERWISE.

2. USE INDICATED DIMENSIONS, DO NOT SCALE DIMENSIONS FROM DRAWINGS.

3. THE ENGINEER WILL MAKE AVAILABLE UPON REQUEST PRIOR TO BID AN ELECTRONIC 3D FILE OF THE TIED–ARCH. THE ACCURACY OF THIS INFORMATION IS NOT GUARANTEED AND IT IS NOT TO BE CONSIDERED AS PART OF THE PLANS GOVERNING CONSTRUCTION OF THE PROJECT.

DESIGN AND CONSTRUCTION SPECIFICATIONS

1. "STANDARD SPECIFICATIONS FOR CONSTRUCTION AND MAINTENANCE OF HIGHWAYS, STREETS AND BRIDGES", 2004 EDITION AND SUPPLEMENTAL SPECIFICATIONS OF THE TEXAS DEPARTMENT OF TRANSPORTATION (TxDOT).

2. AASHTO "LRFD BRIDGE DESIGN SPECIFICATIONS" 5TH EDITION, US UNITS, 2010.

3. "RECOMMENDATIONS FOR STAY CABLE DESIGN, TESTING AND INSTALLATION", FIFTH EDITION, BY PTI (POST–TENSIONING INSTITUTE).

4. AASHTO/AWS D1.5M/D1.5 BRIDGE WELDING CODE, 2002.

5. "CEB–FIB MODEL CODE 1990", DESIGN CODE

DESIGN METHOD

1. LOAD AND RESISTANCE FACTOR DESIGN (LRFD), EACH COMPONENT AND CONNECTION SHALL SATISFY THE REQUIREMENTS OF THIS "LOAD AND RESISTANCE FACTOR DESIGN" METHOD FOR EACH OF THE FOLLOWING LIMIT STATES:

   SERVICE LIMIT STATE
   FATIGUE AND FRACTURE LIMIT STATE
   STRENGTH LIMIT STATE
   EXTREME EVENT LIMIT STATES

DEAD LOAD

1. UNIT WEIGHTS TO BE USED IN THE DETERMINATION OF DEAD LOADS IN ACCORDANCE WITH AASHTO AND AS FOLLOWS:

CONCRETE –	.150 KIPS/CUBIC FOOT
STEEL –	.490 KIPS/CUBIC FOOT
FUTURE WEARING SURFACE–	25 LBS/SQUARE FOOT

LIVE LOAD

1. HL – 93 LIVE LOAD PLUS DYNAMIC LOAD ALLOWANCE FOR THE TRAVEL LANES. A MAXIMUM OF THREE (3) LANES FOR BOTH THE EASTBOUND AND WESTBOUND FRONTAGE ROAD BRIDGES.

2. H – 10 MAINTENANCE VEHICLE WITH NO DYNAMIC ALLOWANCE FOR THE PEDESTRIAN WALKWAY / BIKEWAY.

3. PEDESTRIAN LOADING OF 90 PSF EELS FOR THE PEDESTRIAN WALKWAY / BIKEWAY.

WIND LOADS

1. A SERIES OF WIND TUNNEL MODEL TESTS HAVE BEEN CONDUCTED ON THE STRUCTURE INCLUDING A SECTION MODEL TEST AND A FULL AEROELASTIC MODEL TEST. APPLICABLE WIND LOADS HAVE BEEN DETERMINED AND APPLIED BASED ON THE RESULTS OF THE WIND TUNNEL TESTING PROGRAM.

THERMAL FORCES

1. FOR BEARING AND EXPANSION JOINT DESIGN, THE OVERALL TEMPERATURE RANGE SHALL BE FROM 0 DEG F TO 120 DEG F WITH A MEDIAN TEMPERATURE OF 70 DEG F.

2. FOR STRESS CALCULATIONS:

   OVERALL TEMPERATURE RANGE SHALL BE 0 DEG F TO 120 DEG F FOR STEEL AND 10 DEG F TO 80 DEG F FOR CONCRETE WITH A MEDIAN TEMPERATURE OF 70 DEG F.
   THE TEMPERATURE DIFFERENTIAL BETWEEN TIED–ARCH AND DECK IS ASSUMED TO BE +/– 17 DEG F.
   THERMAL LOAD CASE COMBINATIONS OF THE EXTREME VALUES MENTIONED ABOVE SHALL BE DONE AT 50% INTENSITIES.

LOAD COMBINATIONS

1. LOAD FACTORS AND LOADING COMBINATIONS ARE IN ACCORDANCE WITH ARTICLE 3.4 OF THE AASHTO CODE EXCEPT IN THE FOLLOWING CASES:

A. CABLE FORCE ADJUSTMENTS LOAD CASES INVOLVING CABLE ADJUSTMENTS ARE TREATED AS DEAD LOAD CASES.

B. CABLE EXCHANGE

   1.2DC * 1.2DW * 1.5 (LL+IM) + CABLE EXCHANGE FORCES

   USE A RESISTANCE FACTOR OF 0.8 FOR THIS STRENGTH LIMIT STATE. REFER TO CABLE NOTES SHEET 2 OF 2 FOR LIVE LOADING CONFIGURATION FOR CABLE REPLACEMENT.

C. LOSS OF CABLE

   1.2DC + 1.2DW + 0.75 (LL+IM) + CABLE LOSS DYNAMIC FORCES

   USE A RESISTANCE FACTOR OF 0.9 FOR THIS EXTREME EVENT. FULL LIVE LOAD IS PLACED IN AT 50% INTENSITIES.

CONCRETE STRENGTH

A.	DRILLED SHAFTS	CLASS "C"	3,600 PSI
B.	SEAL CONCRETE	CLASS "E"	3,000 PSI
C.	FOOTINGS	CLASS "F"	5,000 PSI
D.	COLUMNS	CLASS "F"	5,000 PSI
E.	TRANSITION CAP	CLASS "F"	5,000 PSI
F.	REINFORCED CONCRETE SLAB	CLASS "S"	4,000 PSI
G.	TRAFFIC RAILS	CLASS "C"	3,600 PSI

2. THE FOLLOWING CONCRETE ELEMENTS ARE CONSIDERED "MASS PLACEMENTS" AND SHALL BE IN ACCORDANCE WITH SECTION 420.4.G.14:

   A. TRANSITION BENTS INCLUDING FOOTINGS, COLUMNS AND CAP
   B. INTERIOR BENTS INCLUDING FOOTINGS AND COLUMN

CONCRETE FINISHING

1. SURFACE FINISHES FOR CONCRETE SHALL FOLLOW THE SPECIFICATIONS OF THE TEXAS DEPARTMENT OF TRANSPORTATION.

REINFORCING STEEL

2. LENGTH OF LAP SPLICES SHALL NOT BE LESS THAN SPECIFIED BY AASHTO FOR CLASS "C" SPLICE AND AS SHOWN ON DRAWINGS. UNLESS SHOWN ON DRAWINGS, NO MORE THAN 50% OF THE BARS OF THE SAME MARK SHALL BE SPLICED AT THE SAME LOCATION.

3. DIMENSIONS SHOWN FROM THE FACE OF THE CONCRETE TO REINFORCING STEEL ARE TO THE CENTERLINE OF BAR UNLESS OTHERWISE SHOWN. SPACING OF BARS IS FROM CENTER TO CENTER

4. THE FOLLOWING MINIMUM CLEAR COVERS ON REINFORCING ARE REQUIRED:

DECK SLAB	2 ½" TOP REINFORCING 1 ¼" BOTTOM REINFORCING
TRANSITION BENTS (COLUMN)	3"
TRANSITION BENTS (CAP)	2"
INTERIOR BENTS (COLUMN)	3"
FOOTINGS	3"
DRILLED SHAFTS	3"

REV.	DATE	TITLE

NOTES:
ALL COORDINATES ARE RELATIVE TO PROJECT REFERENCE POINT, SEE PLAN P–00006

FOR INFORMATION ONLY

IH30 FRONTAGE ROAD BRIDGES
DALLAS, TX, USA

50% ENGINEERING

EASTBOUND BRIDGE GENERAL PLANS

(C) 2011 SANTIAGO CALATRAVA VALLS. ALL RIGHTS RESERVED.
ALL DRAWINGS ARE FOR DESIGN PURPOSES ONLY. NOT TO BE USED FOR BIDDING OR CONSTRUCTION.

CITY OF DALLAS

©2011 Texas Department of Transportation

SANTIAGO CALATRAVA
ARCHITECT & ENGINEER
PARKRING 11 - 8002 ZÜRICH, SUISSE
TEL: (+41) 44 204 5000 FAX: (+41) 44 204 5002

HUITT~ZOLLARS
Huitt-Zollars, Inc. Dallas
1717 McKinney Avenue, Suite 1400
Dallas, Texas 5202-1236

SCALE ----
DATE October 2011
TITLE GENERAL NOTES
DRAWN BY ----
CHECKED --
DRAWING NO. P-00001

DRILLED SHAFTS

1. THE FOLLOWING PARAMETERS WERE USED TO DESIGN THE DRILLED SHAFTS:

PENETRATION INTO HARD DARK GRAY SHALE	ALLOWABLE END-BEARING RESISTANCE	ALLOWABLE SKIN-FRICTION RESISTANCE
0 TO 30 FEET	20,000 psf	3,000 psf
? 30 TO 40 FEET	20,000 psf	4,000 psf
40 TO 50 FEET	25,000 psf	4,500 psf

2. ALL DRILLED SHAFTS SHALL BE FOUNDED AT THE ELEVATIONS SHOWN ON THE BRIDGE LAYOUT DRAWING OR DEEPER AS NECESSARY TO OBTAIN THE MINIMUM PENETRATIONS INTO THE HARD, DARK, GRAY SHALE.

3. BORING DATA PROVIDED IN THE GEOTECHNICAL INVESTIGATION IS FOR GENERAL INFORMATION ONLY AND DOES NOT GUARANTEE ACTUAL TYPES OF MATERIAL TO BE ENCOUNTERED

4. TEMPORARY STEEL CASINGS MAY BE REQUIRED FOR THE DRILLED SHAFTS DUE TO THE PRESENCE OF GROUND WATER AND CAVING SOILS DURING CONCRETE PLACEMENT. THE CASING SHALL BE SEATED IN THE BEARING STRATUM AND THEN ANY LOOSE MATERIAL AND WATER SHALL BE REMOVED PRIOR TO BEGINNING THE DRILLED SHAFT DESIGN PENETRATION. EXCAVATIONS SHALL BE FREE OF WATER AND LOOSE MATERIALS WHEN CONCRETE IS PLACED. CONCRETE INSTALLATION OF INDIVIDUAL SHAFTS SHALL BE IN A CONTINUOUS MANNER.

5. EXCAVATION MATERIAL, EXCESSIVE CONCRETE, DRILLED SHAFT SHAVINGS, ETC. SHALL NOT BE DEPOSITED INTO THE STREAM OR CREEK BUT SHALL BE DISPOSED OF IN ACCORDANCE WITH THE SPECIFICATIONS

6. REFER TO CONSTRUCTION NOTES DRAWING FOR ADDITIONAL REQUIREMENTS.

STRUCTURAL STEEL

1. ALL STRUCTURAL STEEL SHALL BE ASTM A709 (GRADE 50) FURNISHED WITH ZONE 1 TOUGHNESS REQUIREMENTS UNLESS OTHERWISE NOTED ON THE PLANS. GRADE 50W, 50S, OR HPS 50W MAY BE SUBSTITUTED FOR GRADE 50 AT NO ADDITIONAL COST.

2. FRACTURE CRITICAL MEMBERS ARE INDICATED ON THE PLANS. THE FOLLOWING FRACTURE CRITICAL MEMBERS CONTAIN COMPONENTS THAT ARE DESIGNATED FRACTURE CRITICAL:

   LONGITUDINAL GIRDER
   LONGITUDINAL TIE GIRDER
   TIED-ARCH

3. ALL CONNECTION BOLTS TO BE ASTM A-325 HIGH STRENGTH BOLTS IN STANDARD HOLES UNLESS OTHERWISE NOTED ON PLANS. BOLT THREAD SHALL BE EXCLUDED FROM ALL SHEAR PLANES. ALL CONNECTIONS TO BE SLIP CRITICAL. ALL PROPOSED BOLTED CONNECTIONS MAY BE REVISED TO ACCOMMODATE A CONSISTENT BOLT DIAMETER AS SUITABLE TO THE CONTRACTOR AND SUBJECT TO THE ENGINEER'S APPROVAL.

4. EXTERIOR BOLTED FAYING SURFACES SHALL BE BLASTED CLEANED (SSPC-SP10) AND COATED (CLASS A) FOR A CLASS A SLIP CONDITION (SLIP COEFFICIENT OF 0.33). INTERIOR BOLTED FAYING FAYING SURFACES SHALL BE LEFT UNPAINTED AND BLASTED CLEAN (SSPC-SP10).

5. SHEAR CONNECTORS SHALL BE WELDED STUDS TYPE ASTM A 108, GRADE 1010, 1015, 1018 OR 1020.

6. STEEL PIPE, EXCLUDING GUIDE PIPES, SHALL BE ASTM A500 GRADE B GALVANIZED AFTER FABRICATION UNLESS OTHERWISE NOTED. GUIDE PIPES SHALL BE ASTM A709 (GRADE 50).

MISCELLANEOUS METALS

1. ALL TIED-ARCH LADDERS AND PLATFORMS SHALL BE ASTM A709 GRADE 36 STEEL, GALVANIZED

2. DOORS, HATCHES AND HARDWARE SHALL BE CORROSION-RESISTANT MATERIALS AS NOTED ON PLAN DETAILS.

CABLES

1. CABLES SHALL BE IN ACCORDANCE WITH THE CONSTRUCTION DRAWINGS, PTI RECOMMENDATIONS AND THE SPECIAL SPECIFICATIONS.

2. CABLE TESTING SHALL BE IN ACCORDANCE WITH THE SPECIAL SPECIFICATIONS.

3. CABLE ANCHORAGE SYSTEMS SHALL BE CONSTRUCTED IN A MANNER WHICH WILL ALLOW THE FORCE IN THE STAY CABLE TO BE ADJUSTED AT THE LIVE END AND TO ALLOW THE CABLE TO BE TO BE COMPLETELY DE-TENSIONED AND REMOVED DURING THE SERVICE LIFE OF THE BRIDGE WITHOUT DAMAGING THE SURROUNDING STRUCTURE.

4. FOR THE CABLE REPLACEMENT, TRAFFIC SHALL BE RESTRICTED TO THE FOLLOWING:

   A. ONE HS-20 CONSTRUCTION VEHICLE IS ALLOWED ADJACENT TO CABLE TO BE REPLACED NEXT TO T80HT RAIL. THE LANE ADJACENT TO THE CONSTRUCTION VEHICLE SHALL BE CLOSED TO TRAFFIC WITH ONE 12' LANE ALLOWED SHIFTED ADJACENT TO EXTERIOR T502 RAIL.

   B. THE PEDESTRIAN WALKWAY / BIKEWAY SHALL BE CLOSED.

   THE BRIDGE IS CAPABLE OF WITHSTANDING THE LOSS OF ANY ONE CABLE WITHOUT STRUCTURAL INSTABILITY. ALL INDIVIDUAL CABLES SHALL BE REMOVABLE BY DE-TENSIONING THE LIVE ANCHORAGE.

PAINTED ELEMENTS

1. PAINT THE INSIDE OF THE TIED-ARCH WITH A WHITE POLYAMIDE CURED EPOXY.

2. PAINT ALL PERMANENT STEEL WITH SYSTEM IV IN ACCORDANCE WITH ITEM 446 "CLEANING AND PAINTING STEEL". IN GENERAL, ALL EXPOSED STEEL SURFACES SHALL BE PAINTED INCLUDING:

   BEARINGS - EXCEPT SLIDING SURFACES
   LONGITUDINAL GIRDER
   LONGITUDINAL TIE GIRDER
   TRANSVERSE FLOORBEAMS
   LONGITUDINAL STRINGERS
   LONGITUDINAL EDGE BEAMS
   TIED-ARCH
   CABLE GUIDE PIPE AND ANCHORAGE SYSTEMS
   DRAINAGE PIPES
   ROADWAY LUMINAIRE (ALL COMPONENTS)
   TYPE T80HT (MOD) RAIL (ALL STEEL COMPONENTS)
   PEDESTRIAN / BICYCLE RAIL (ALL MILD STEEL COMPONENTS)

3. IN GENERAL ALL EXPOSED CONCRETE SURFACES SHALL BE PAINTED INCLUDING:

   A. UNDERSIDE OF CONCRETE DECK ELEMENTS INCLUDING CAST-IN-PLACE AND PRECAST PANELS
   B. ALL EXTERIOR SURFACES OF CONCRETE RAILS
   C. TRANSITION BENT COLUMNS AND CAPS
   D. INTERIOR BENT COLUMNS
   E. STAIRWAYS

4. THE COLOR SHALL BE "RAL 9010" SEMI-GLOSS. THE SAME PAINT SUPPLIER WILL BE USED FOR ALL PAINTED COMPONENTS.

5. THERE IS NO FEDERAL STANDARD 595B COLOR THAT MATCHES THE ARCHITECTURAL COLOR REQUIREMENT

CONSTRUCTION

1. THE ERECTION SEQUENCE INDICATED ON DRAWINGS IS ONLY SUGGESTED AND MAY NOT PROVIDE FOR CONSTRUCTION IN EVERY DETAIL AND IF USED BY THE CONTRACTOR SHALL BE VERIFIED FOR ACCURACY AND CONSTRUCTABILITY BY THE CONTRACTOR PRIOR TO SUBMITTING HIS BID. IT IS THE CONTRACTOR'S RESPONSIBILITY TO PLAN AND PROPOSE ALL CONSTRUCTION ACTIVITIES, SUBJECT TO THE APPROVAL OF THE ENGINEER. THE CONTRACTOR'S BID SHALL BE BASED SOLELY UPON AN ERECTION METHOD AND CONSTRUCTION SEQUENCE DESIGNED BY THE CONTRACTOR.

2. CONSTRUCTION DEAD LOAD SHALL BE ALL OF THOSE PARTS TO BE INCORPORATED INTO THE FINAL STRUCTURE. MINIMUM 10% IMPACT IS TO BE APPLIED TO DEAD LOADS DURING THEIR LIFTING.

3. CONSTRUCTION LIVE LOADS SHALL BE THE ERECTION EQUIPMENT, MATERIALS AND PERSONNEL OVER THE FULL LENGTH OF THE STRUCTURE WITH A REDUCTION TO 5 PSF ON PORTIONS OF THE SUPERSTRUCTURE TO PRODUCE MAXIMUM STRESS.

4. TEMPERATURE AND WIND LOADING EFFECTS SHALL BE CONSIDERED DURING CONSTRUCTION.

5. JACKING FORCES APPLIED TO CABLE SHALL NOT EXCEED 45% OF THE MINIMUM ULTIMATE TENSILE STRESS OF THE CABLE.

REV.	DATE	TITLE

NOTES:
ALL COORDINATES ARE RELATIVE TO PROJECT REFERENCE POINT, SEE PLAN P-00006

FOR INFORMATION ONLY

IH30 FRONTAGE ROAD BRIDGES
DALLAS, TX, USA

50% ENGINEERING

GENERAL PLANS

(C) 2011 SANTIAGO CALATRAVA VALLS. ALL RIGHTS RESERVED.
ALL DRAWINGS ARE FOR DESIGN PURPOSES ONLY. NOT TO BE USED FOR BIDDING OR CONSTRUCTION.

CITY OF DALLAS

©2011 Texas Department of Transportation

SANTIAGO CALATRAVA
ARCHITECT & ENGINEER
PARKRING 11 - 8002 ZÜRICH, SUISSE
TEL: (+41) 44 204 5000 FAX: (+41) 44 204 5002

HUITT~ZOLLARS
Huitt-Zollars, Inc. Dallas
1717 McKinney Avenue, Suite 1400
Dallas, Texas 5202-1236

SCALE ---
DATE October 2011
DRAWN BY ---
CHECKED --
TITLE GENERAL NOTES - DRILLED SHAFTS AND CABLES
DRAWING NO. P-00002

CONSTRUCTION NOTES

1. CONTRACTOR SHALL COMPLY WITH ALL REQUIREMENTS OF THE CORRIDOR DEVELOPMENT CERTIFICATE PERMIT.

2. NEAR THE IH 30 PROJECT LIMITS, THERE ARE THREE (3) EXISTING EAST LEVEE ACCESS LOCATIONS AS NOTED BELOW:
   COMMERCE ST ADJACENT TO DALLAS COUNTY JAIL (GATE)
   RIVERFRONT BLVD ADJACENT TO FUEL CITY (GATE)
   RIVERFRONT BLVD ADJACENT TO DART BRIDGE (GATE)

   IN ADDITION, THERE ARE THREE (3) EXISTING WEST LEVEE ACCESS LOCATIONS AS NOTED BELOW:
   CANADA DRIVE NORTH OF CONTINENTAL AVE (GATE)
   BECKLEY AVE ADJACENT TO COMMERCE ST (GATE)
   BRAZOS ST ADJACENT TO JEFFERSON BLVD (GATE)

   CONTRACTOR SITE ACCESS WILL BE FROM THE EXISTING ACCESS LOCATIONS, SUBJECT TO APPROVAL BY DALLAS FLOOD CONTROL DISTRICT AND U.S. ARMY CORPS OF ENGINEERS, AND ALONG THE EXISTING ROADS AT THE BASE OF EAST AND WEST LEVEE. EXCEPT AS INDICATED IN THE CONSTRUCTION PLANS, THE CONTRACTOR WILL NOT BE ALLOWED TO CONSTRUCT ANY ADDITIONAL ROADS OR RAMPS ON OR BETWEEN THE FOOTPRINT OF THE LEVEES WITHOUT WRITTEN CONSENT FROM THE U.S. ARMY CORPS OF ENGINEERS.

   THE CONTRACTOR IS RESPONSIBLE FOR THE DELIVERY OF ALL MATERIALS AND EQUIPMENT INTO THE TRINITY RIVER FLOODWAY. IF THE EXISTING ACCESS LOCATIONS DO NOT MEET THE PROJECT NEEDS, THE CONTRACTOR IS RESPONSIBLE FOR ALTERNATIVE METHODS OF DELIVERY AND SITE ACCESS AT HIS OWN EXPENSE.

3. THE EXISTING LEVEE ROADS SHALL BE MAINTAINED IN A CONDITION THAT IS ACCEPTABLE TO BOTH DALLAS FLOOD CONTROL DISTRICT AND THE U.S. ARMY CORPS OF ENGINEERS AT ALL TIMES. AT THE COMPLETION OF THE PROJECT, THE EXISTING MAINTENANCE ROADS SHALL BE IN AS GOOD AS OR BETTER CONDITION THAN THEY ARE AT THE BEGINNING OF THE PROJECT.

4. CONTRACTOR IS TO USE EXTREME CARE AND CAUTION WHEN WORKING NEAR EXISTING EMERGENT WETLAND AREAS.

5. THE CONTRACTOR SHALL CONTACT THE ENGINEER TO VERIFY LIMITS OF ALL WETLAND AREAS PRIOR TO START OF CONSTRUCTION.

6. HEAVY EQUIPMENT WORKING IN WETLANDS MUST BE PLACED ON MATS, OR OTHER APPROVED MEASURES TAKEN TO MINIMIZE SOIL DISTURBANCE.

7. EXCESS MATERIAL SHALL BE DISPOSED AT APPROVED LOCATION(S) SECURED BY THE CONTRACTOR AT HIS OWN EXPENSE. CONTRACTOR WILL NOT BE ALLOWED TO DISPOSE OF ANY MATERIAL IN THE FLOODWAY. MATERIAL TO BE REMOVED WITHIN 24 HOURS OF NOTIFICATION.

8. THE CONTRACTOR WILL BE RESPONSIBLE FOR MAINTAINING EROSION CONTROL DURING CONSTRUCTION AND FOR OBTAINING ANY REQUIRED CONSTRUCTION RELATED DRAINAGE PERMITS OR MAKING ANY RELATED NOTIFICATIONS.

9. THE CONTRACTOR SHALL ADOPT APPROPRIATE CONSTRUCTION SITE MANAGEMENT PRACTICES TO PREVENT THE DISCHARGE OF OILS, PAINTS, GASOLINE, GREASE AND OTHER POLLUTANTS FROM ENTERING THE STORM WATER AND THE TRINTIY RIVER.

10. THE CONTRACTOR SHALL MAKE THE STORM WATER POLLUTION PREVENTION PLANS (SW3P) AVAILABLE, UP ON REQUEST, TO THE TEXAS COMMISSION ON ENVIRONMENTAL QUALITY (TCEQ).

11. PLANS FOR THE CONSTRUCTION OF EARTHEN RAMPS AND CONSTRUCTION PADS ON THE LEVEE SHALL BE SUBMITTED TO THE U.S. ARMY CORPS OF ENGINEERS FOR REVIEW AND APPROVAL AT LEAST 28 WORKING DAYS PRIOR TO THE START OF CONSTRUCTION ACTIVITIES. PLANS SHALL INCLUDE DETAILED INFORMATION PERTINENT TO THE RAMP OR PAD LOCATION, SIZE, LAYOUT, MATERIALS AND REMOVAL AFTER COMPLETION OF ASSOCIATED CONSTRUCTION ACTIVITIES. UPON REMOVAL OF RAMPS OR PADS, THE LEVEE SHALL BE RESTORED TO ITS ORIGINAL OR DESIGN PLAN CROSS-SECTION AND CONDITION, SUBJECT TO APPROVAL BY THE U.S. ARMY CORPS OF ENGINEERS.

12. PLANS FOR ANY EXCAVATIONS WITHIN THE LEVEE FOOTPRINT OR WITHIN 50 FEET OF EITHER TOE OF THE LEVEE SHALL BE SUBMITTED TO THE U.S. ARMY CORPS OF ENGINEERS FOR REVIEW AND APPROVAL AT LEAST 28 WORKING DAYS PRIOR TO THE START OF CONSTRUCTION OF ACTIVITIES. ALL EXCAVATIONS, INCLUDING TEMPORARY SHORING, COFFERDAMS, AND PIERS SHALL BE APPROVED BY THE U.S. ARMY CORPS OF ENGINEERS PRIOR TO THE START OF ANY SUCH CONSTRUCTION. THE CONTRACTOR SHALL NOTIFY THE U.S. ARMY CORPS OF ENGINEERS A MINIMUM OF 72 HOURS PRIOR TO THE INITIATION OF PIER DRILLING OPERATIONS. NO MATERIAL MAY BE EXCAVATED FROM THE LEVEE OTHER THAN MATERIAL REMOVED AS PART OF PIER DRILLING OPERATIONS.

13. ALL DRILLING WITHIN THE LEVEE FOOTPRINT OR WITHIN 50 FEET OF EITHER TOE OF THE LEVEE SHALL BE PERFORMED IN ACCORDANCE WITH U.S. ARMY ENGINEER REGULATION 1110-1-1807, "PROCEDURES FOR DRILLING IN EARTH EMBANKMENTS". THE CONTRACTOR SHALL IMMEDIATELY CEASE ANY CONSTRUCTION ACTIVITY DETERMINED BY THE U.S. ARMY CORPS OF ENGINEERS TO PRESENT AN UNACCEPTABLE RISK TO THE INTEGRITY OF THE LEVEE. THE REQUIREMENTS OF ER 1110-1-1807 SHALL TAKE PRECEDENCE OVER THOSE OF TxDOT STANDARD SPECIFICATION ITEM 416

14. AS AN ALTERNATIVE, THE CONTRACTOR MAY USE CASING FOR DRILLING ALL PIERS. CASING SHALL EXTEND FROM THE TOP OF EACH HOLE AND INTO THE FOUNDATION MATERIAL TO AN ELEVATION OF 360.0 OR LOWER. CASING SHALL BE EXTRACTED DURING THE CONCRETE PLACEMENT PROCESS, AS PER TxDOT STANDARD SPECIFICATION ITEM 416.

15. CONTRACTOR SHALL MAINTAIN STOCK PILES OF SUITABLE IMPERVIOUS MATERIAL (AASHTO A-6, 1-2, OR A-7-6) ADJACENT TO EXCAVATED AREAS FOR BACKFILLING IN THE EVENT OF FLOODING. STOCKPILE QUANTITIES TO BE MAINTAINED SHALL EXCEED THE VOLUME OF ALL OPEN EXCAVATIONS, INCLUDING PIERS, BY A FACTOR OF 2.

16. THE CONTRACTOR SHALL COORDINATE WITH THE DALLAS FLOOD CONTROL DISTRICT AND U.S. ARMY CORPS OF ENGINEER REGARDING STORAGE OF ALL EQUIPMENT AND CONSTRUCTION MATERIALS WITHIN THE FLOODWAY (BETWEEN THE LEVEES).

REV.	DATE	TITLE

NOTES:
ALL COORDINATES ARE RELATIVE TO PROJECT REFERENCE POINT, SEE PLAN P-00006

FOR INFORMATION ONLY

IH30 FRONTAGE ROAD BRIDGES
DALLAS, TX, USA

50% ENGINEERING

EASTBOUND BRIDGE GENERAL PLANS

(C) 2011 SANTIAGO CALATRAVA VALLS. ALL RIGHTS RESERVED.
ALL DRAWINGS ARE FOR DESIGN PURPOSES ONLY. NOT TO BE USED FOR BIDDING OR CONSTRUCTION.

CITY OF DALLAS

©2011 Texas Department of Transportation

SANTIAGO CALATRAVA
ARCHITECT & ENGINEER
PARKRING 11 - 8002 ZÜRICH, SUISSE
TEL: (+41) 44 204 5000 FAX: (+41) 44 204 5002

HUITT~ZOLLARS
Huitt-Zollars, Inc. Dallas
1717 McKinney Avenue, Suite 1400
Dallas, Texas 5202-1236

SCALE	TITLE
----	GENERAL NOTES - CONSTRUCTION NOTES
DATE: October 2011	
DRAWN BY: ---- / CHECKED: --	DRAWING NO. P-00003

FLOOD EMERGENCY OPERATION PLAN

1. DURING CONSTRUCTION, THE CONTRACTOR SHALL TAKE WHATEVER MEANS NECESSARY TO SAFEGUARD THE INTEGRITY OF THE LEVEE. CONTRACTOR SHALL PREPARE AND SUBMIT FOR APPROVAL TO THE U.S. ARMY CORPS OF ENGINEERS AND THE CITY OF DALLAS FLOOD CONTROL DISTRICT,A FLOOD EMERGENCY ACTION PLAN THAT WILL BE IMPLEMENTED IN THE EVENT OF IMMINENT FLOODING DURING CONSTRUCTION. THIS PLAN WILL ADDRESS EMERGENCY ACTIONS TO BE IMPLEMENTED DURING ABOVE NORMAL RIVER STAGES FOR THE IH 30 PROJECT LIMITS.

   EMERGENCY FLOOD REQUIREMENTS ARE CONSIDERED SUBSIDIARY TO OTHER PAY ITEMS.

2. THE FLOOD EMERGENCY OPERATION PLAN SHALL BE SUBMITTED TO THE U.S. ARMY CORPS OF ENGINEERS AND THE CITY OF DALLAS FLOOD CONTROL DISTRICT FOR REVIEW AND APPROVAL AT LEAST 28 WORKING DAYS PRIOR TO THE START OF CONSTRUCTION ACTIVITIES. THE PLAN SHALL ADDRESS, IN DETAIL, STEPS TO BE TAKEN BY THE CONTRACTOR TO INCLUDE, BUT NOT BE LIMITED TO THE FOLLOWING:

   A. QUANTITIES AND LOCATIONS OF STOCKPILES OF SUITABLE IMPERVIOUS MATERIAL FOR BACKFILLING EXCAVATION. STOCKPILE QUANTITIES TO BE MAINTAINED SHALL EXCEED THE VOLUME OF ALL OPEN EXCAVATIONS, INCLUDING PIERS, BY FACTOR OF TWO (2).
   B. PROCEDURES AND EQUIPMENT TO BE UTILIZED FOR BACKFILLING OPERATIONS.
   C. TIME FRAMES FOR IMPLEMENTING EMERGENCY ACTIONS.
   D. NAME AND PHONE NUMBER OF CONTRACTOR'S POINT OF CONTACT (AND AT LEAST ONE ALTERNATE) FOR EMERGENCY ACTIONS.

3. THE DECISION TO COMMENCE EMERGENCY ACTIONS WILL BE MADE BY THE CITY OF DALLAS FLOOD CONTROL DISTRICT (FCD). IN MAKING ITS DECISION, THE FLOOD CONTROL DISTRICT WILL TAKE INTO CONSIDERATION DATA FROM THE NATIONAL WEATHER SERVICE AND RIVER FORECAST ENTER AND THE U.S. ARMY CORPS OF ENGINEERS; AS WELL AS LOCALIZED FLOOD FIGHTING ACTIVITIES THAT MAY BE ON GOING. UPON NOTIFICATION FROM THE FLOOD CONTROL DISTRICT THRU TxDOT, THE CONTRACTOR'S EMERGENCY ACTION POC (OR ALTERNATE) SHALL BE RESPONSIBLE FOR INSURING THAT EMERGENCY ACTIONS ARE IMPLEMENTED AS DIRECTED BY THE FCD.

4. FOR BRIDGE BENTS LOCATED WITHIN THE LEVEE FOOTPRINT, BACKFILL SHALL BE PLACED AND REMOVED WHEN THE RIVER STAGE IS AT THE ELEVATIONS INDICATED IN THE FOLLOWING CHART:

BRIDGE	BENTS	PLACE BACKFILL (WHEN RIVER IS AT THIS ELEVATION)	REMOVE BACKFILL (NOT UNTIL RIVER RECEDES TO THIS ELEVATION)
WB FR	XXX	XXX	XXX
WB ML	XXX	XXX	XXX
HOV	XXX	XXX	XXX
EB ML	XXX	XXX	XXX
EB FR	XXX	XXX	XXX

   NOTE: FOR CONSTRUCTION WITHIN THE FOOTPRINT OF THE LEVEE, EACH PIER SHALL BE COMPLETE BEFORE ANOTHER PIER CAN BE STARTED. A PIER IS CONSIDERED COMPLETE ONLY AFTER IT HAS BEEN DRILLED TO THE REQUIRED DEPTH, WITH REINFORCING STEEL INSTALLED AND CONCRETE PLACED OVER THE FULL DEPTH OF THE EXCAVATION.

5. PIER BENT EXCAVATIONS WITHIN THE FLOODPLAIN SHALL BE BACKFILLED WITH IMPERVIOUS MATERIAL TO THE TOP OF THE PIER HOLE, AND THEN CAPPED WITH AN ADDITIONAL 3-FEET OF IMPERVIOUS BACKFILL THAT EXTENDS A MINIMUM OF ONE PIER DIAMETER AROUND THE PERIMETER OF THE PIER EXCAVATION.

   FOR PIER HOLES THAT ARE FULLY CASED OVER THE PIER EXCAVATION DEPTH, THE CONTRACTOR HAS THE OPTION OF COVERING THE OPEN PIER HOLE WITH STEEL PLATE (1/2-INCH THICK OR GREATER) AND THEN COVERING THE STEEL PLATE WITH IMPERVIOUS FILL MATERIAL TO A DEPTH OF 5 FEET, AND EXTENDING THE FILL A MINIMUM OF ONE PIER DIAMETER AROUND THE PERIMETER OF THE STEEL PLATE. THIS OPTION DOES NOT APPLY TO PARTIALLY CASED HOLES.

6. FLOOD CONTROL DISTRICT CONTACT INFORMATION IS AS FOLLOWS:

   CHIEF:
   ALTERNATE:

   ADDRESS:
   FLOOD CONTROL DISTRICT
   ATTN:
   2710 MUNICIPAL STREET
   SE SERVICE CENTER, 2ND FLOOR
   DALLAS, TX 75207

REV.	DATE	TITLE

NOTES:
ALL COORDINATES ARE RELATIVE TO PROJECT REFERENCE POINT, SEE PLAN P-00006

FOR INFORMATION ONLY

IH30 FRONTAGE ROAD BRIDGES
DALLAS, TX, USA

50% ENGINEERING

EASTBOUND BRIDGE GENERAL PLANS

(C) 2011 SANTIAGO CALATRAVA VALLS. ALL RIGHTS RESERVED.
ALL DRAWINGS ARE FOR DESIGN PURPOSES ONLY. NOT TO BE USED FOR BIDDING OR CONSTRUCTION.

CITY OF DALLAS

Texas Department of Transportation

SANTIAGO CALATRAVA
ARCHITECT & ENGINEER
PARKRING 11 - 8002 ZÜRICH, SUISSE
TEL: (+41) 44 204 5000 FAX: (+41) 44 204 5002

HUITT~ZOLLARS
Huitt-Zollars, Inc. Dallas
1717 McKinney Avenue, Suite 1400
Dallas, Texas 5202-1236

SCALE	TITLE
----	GENERAL NOTES - FLOOD EMERGENCY OPERATION PLAN
DATE: October 2011	
DRAWN BY: ---- / CHECKED: --	DRAWING NO. P-00004

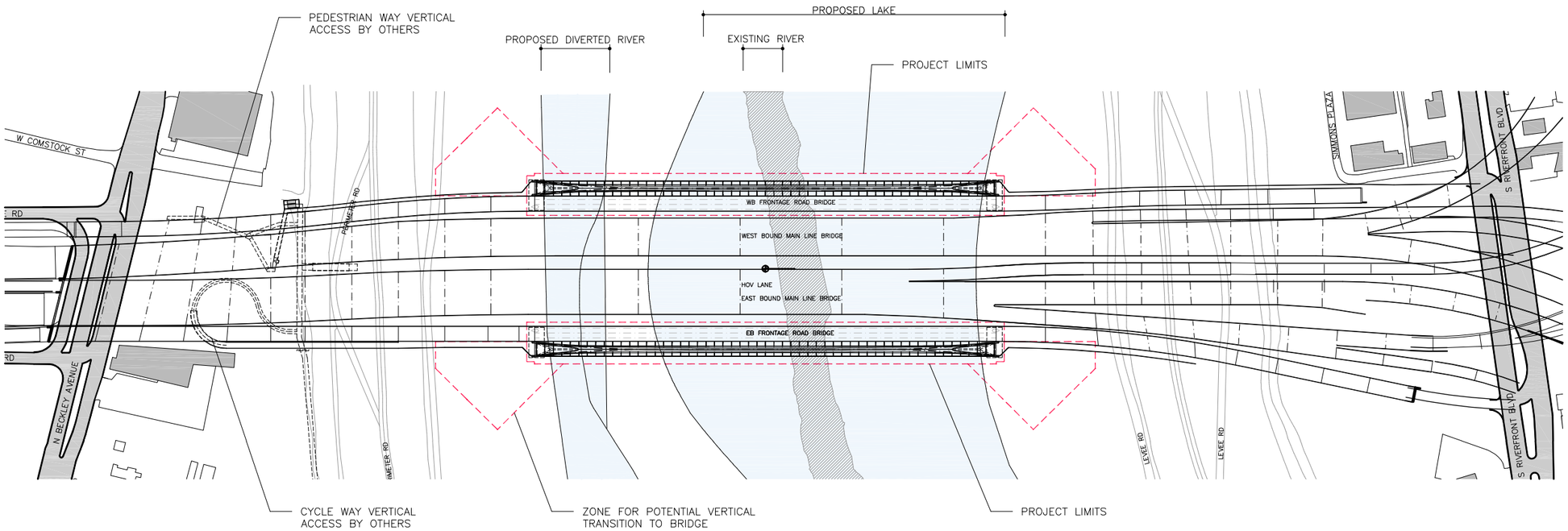

REV.	DATE	TITLE

NOTES:
ALL COORDINATES ARE RELATIVE TO PROJECT REFERENCE POINT, SEE PLAN P-00006

FOR INFORMATION ONLY

IH30 FRONTAGE ROAD BRIDGES

DALLAS, TX, USA

50% ENGINEERING

EASTBOUND BRIDGE GENERAL PLANS

(C) 2011 SANTIAGO CALATRAVA VALLS. ALL RIGHTS RESERVED.
ALL DRAWINGS ARE FOR DESIGN PURPOSES ONLY. NOT TO BE USED FOR BIDDING OR CONSTRUCTION.

CITY OF DALLAS

Texas Department of Transportation

SANTIAGO CALATRAVA
ARCHITECT & ENGINEER
PARKRING 11 - 8002 ZÜRICH, SUISSE
TEL: (+41) 44 204 5000 FAX: (+41) 44 204 5002

HUITT~ZOLLARS
Huitt-Zollars, Inc. Dallas
1717 McKinney Avenue, Suite 1400
Dallas, Texas 5202-1236

SCALE 1" = 300'-0"

DATE October 2011

TITLE SITE PLAN

DRAWN BY ----

CHECKED --

DRAWING NO. P-00005

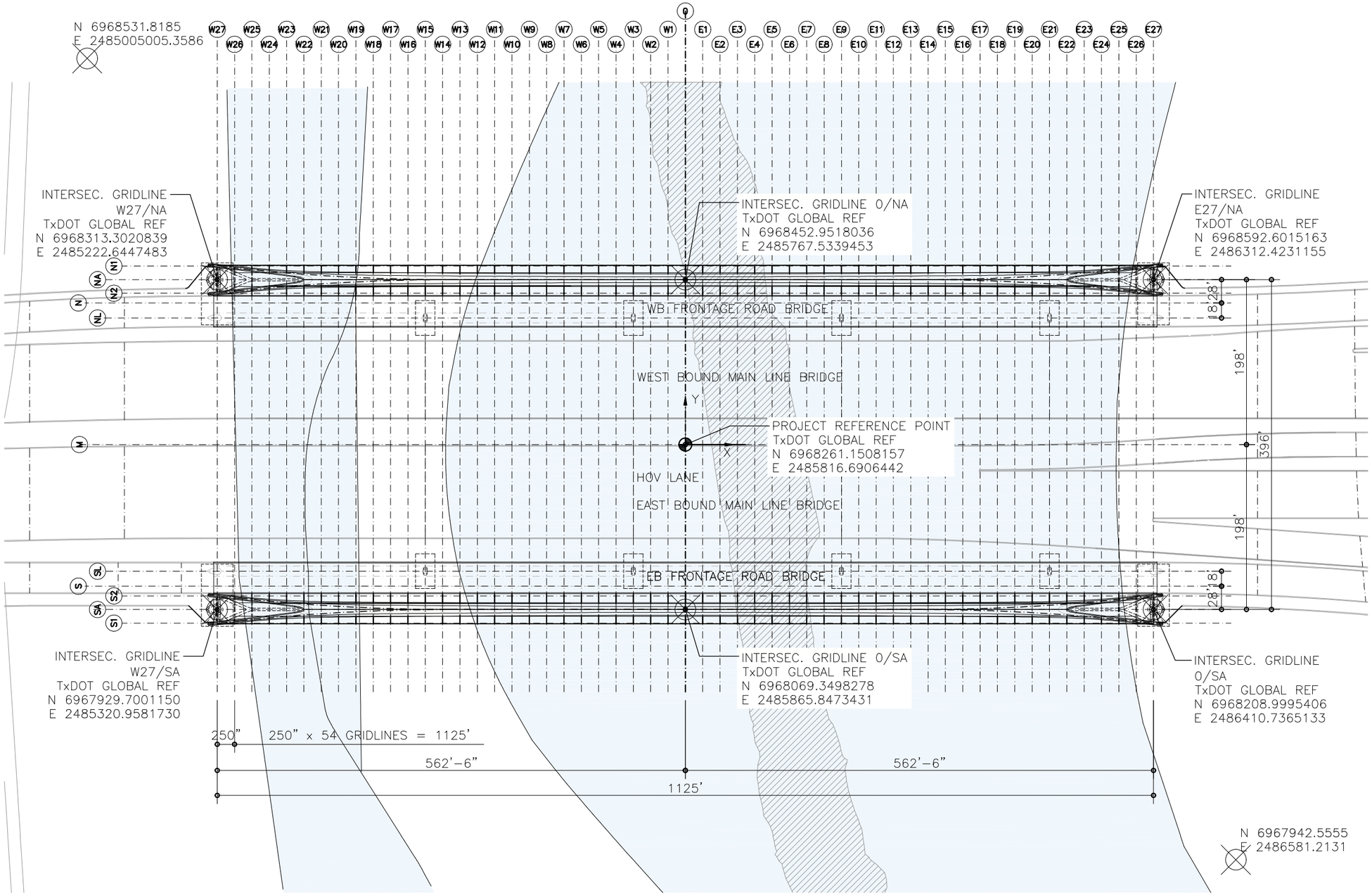

REV.	DATE	TITLE

NOTES:
ALL COORDINATES ARE RELATIVE TO PROJECT REFERENCE POINT, SEE PLAN P-00006

PROJECT REFERENCE POINT

SCLLC X=0, Y=0
Z=0 (400' LEVEL)

RELATIVE TO
TxDOT GLOBAL SYSTEM
N 6968261.1508157
E 2485816.6906442

FOR INFORMATION ONLY

IH30 FRONTAGE ROAD BRIDGES
DALLAS, TX, USA

50% ENGINEERING

EASTBOUND BRIDGE GENERAL PLANS

(C) 2011 SANTIAGO CALATRAVA VALLS. ALL RIGHTS RESERVED.
ALL DRAWINGS ARE FOR DESIGN PURPOSES ONLY. NOT TO BE USED FOR BIDDING OR CONSTRUCTION.

CITY OF DALLAS

©2013 Texas Department of Transportation

SANTIAGO CALATRAVA
ARCHITECT & ENGINEER
PARKRING 11 - 8002 ZÜRICH, SUISSE
TEL: (+41) 44 204 5000 FAX: (+41) 44 204 5002

HUITT~ZOLLARS
Huitt-Zollars, Inc. Dallas
1717 McKinney Avenue, Suite 1400
Dallas, Texas 5202-1236

SCALE	TITLE
1/128" = 1'-0"	SCLLC PROJECT REFERENCE PLAN
DATE: October 2011	
DRAWN BY: --- / CHECKED: --	DRAWING NO. P-00006

REV.	DATE	TITLE

NOTES:
ALL COORDINATES ARE RELATIVE TO PROJECT REFERENCE POINT, SEE PLAN P-00006

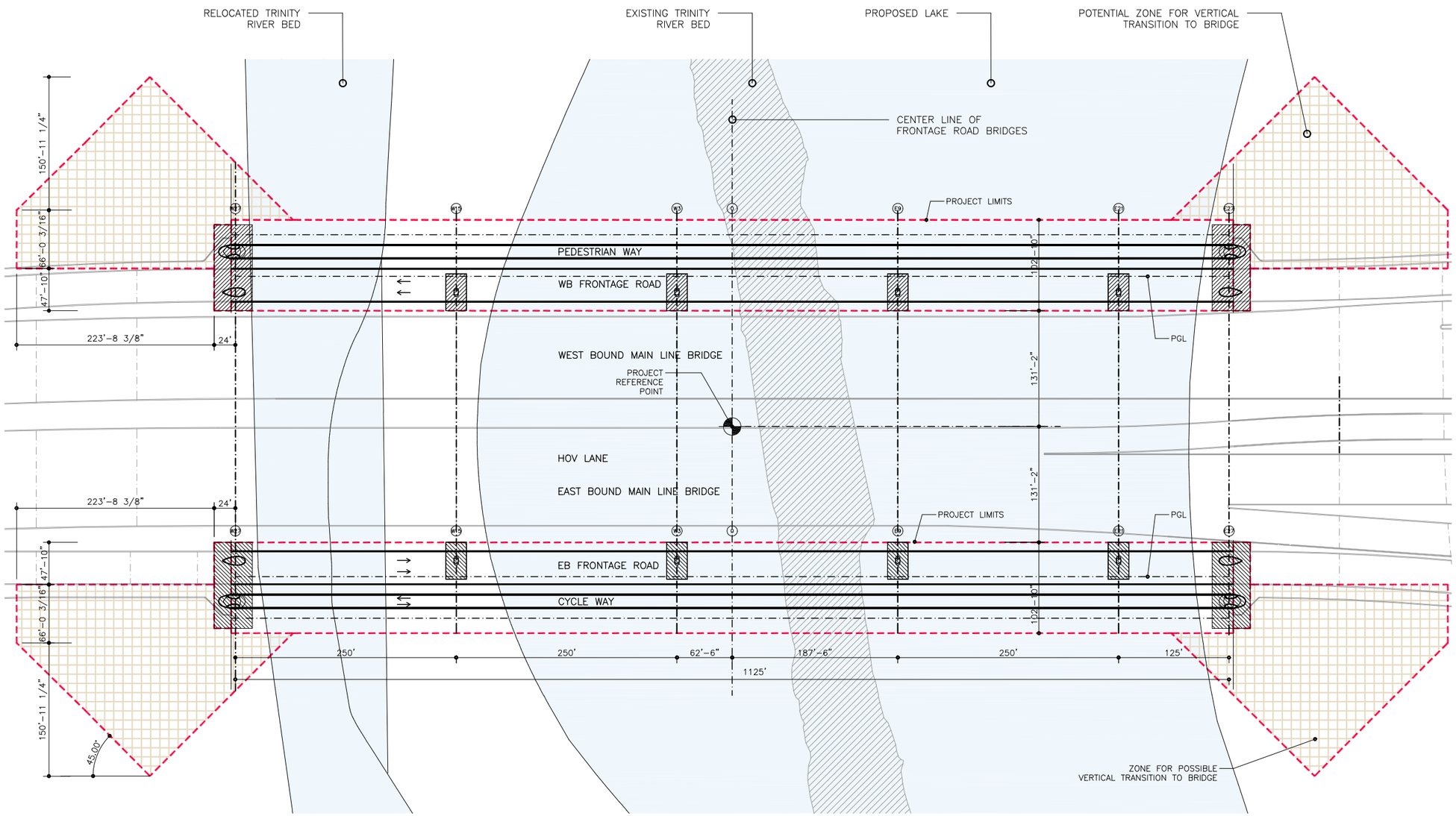

FOR INFORMATION ONLY

HORIZONTAL ALIGNMENT

IH30 FRONTAGE ROAD BRIDGES
DALLAS, TX, USA

50% ENGINEERING

EASTBOUND BRIDGE GENERAL PLANS

(C) 2011 SANTIAGO CALATRAVA VALLS. ALL RIGHTS RESERVED.
ALL DRAWINGS ARE FOR DESIGN PURPOSES ONLY. NOT TO BE USED FOR BIDDING OR CONSTRUCTION.

CITY OF DALLAS

Texas Department of Transportation

SANTIAGO CALATRAVA
ARCHITECT & ENGINEER
PARKRING 11 – 8002 ZÜRICH, SUISSE
TEL: (+41) 44 204 5000 FAX: (+41) 44 204 5002

HUITT~ZOLLARS
Huitt-Zollars, Inc. Dallas
1717 McKinney Avenue, Suite 1400
Dallas, Texas 5202-1236

SCALE	TITLE
1/128"=1'-0"	ALIGNMENT OVERVIEW & PROJECT LIMITS
DATE: October 2011	
DRAWN BY: ---- / CHECKED: --	DRAWING NO. P-00010

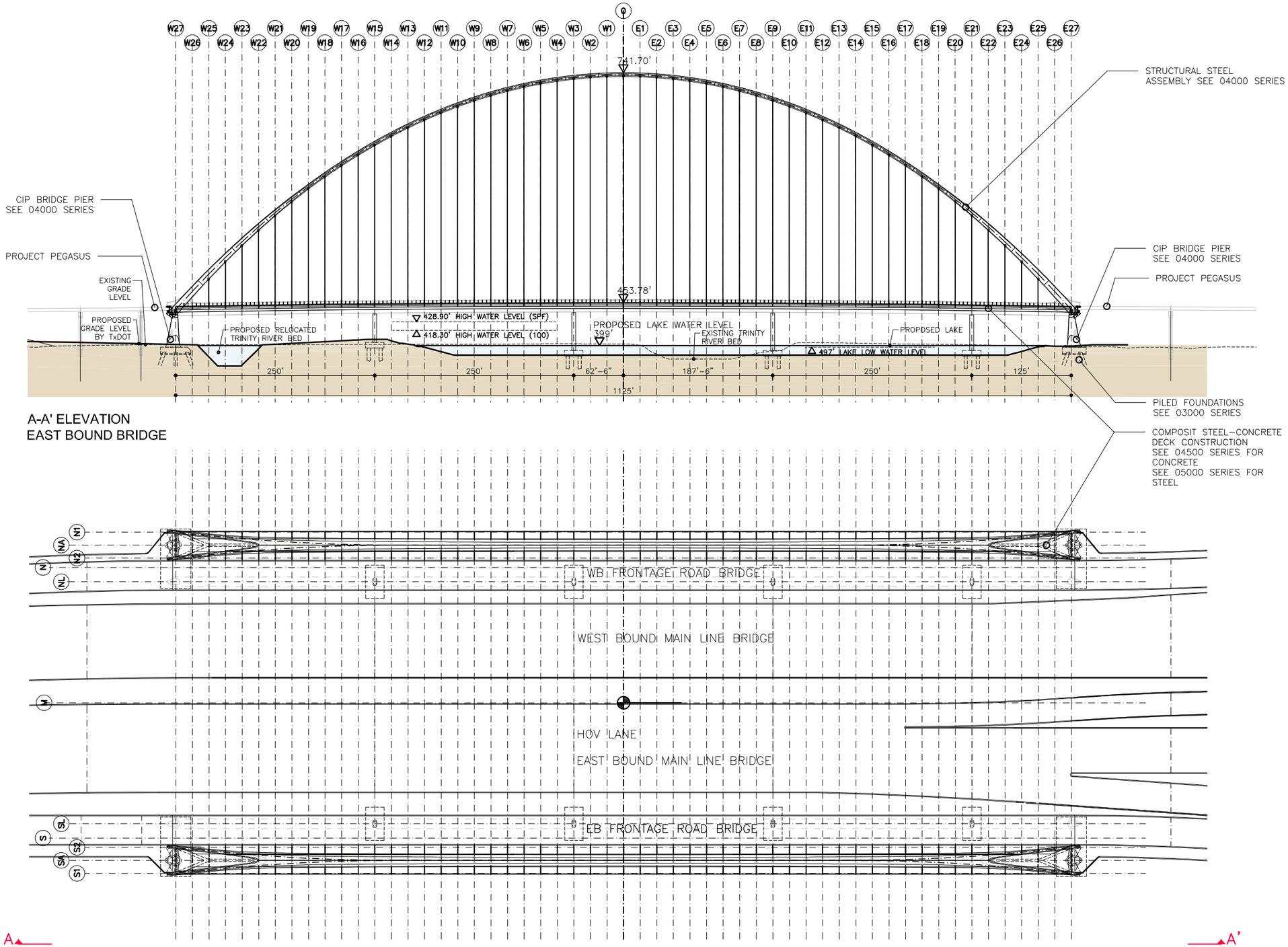

REV.	DATE	TITLE

NOTES:
ALL COORDINATES ARE RELATIVE TO PROJECT REFERENCE POINT, SEE PLAN P-00006

FOR INFORMATION ONLY

IH30 FRONTAGE ROAD BRIDGES
DALLAS, TX, USA

50% ENGINEERING

EASTBOUND BRIDGE GENERAL PLANS

(C) 2011 SANTIAGO CALATRAVA VALLS. ALL RIGHTS RESERVED.
ALL DRAWINGS ARE FOR DESIGN PURPOSES ONLY. NOT TO BE USED FOR BIDDING OR CONSTRUCTION.

CITY OF DALLAS

©2011 Texas Department of Transportation

SANTIAGO CALATRAVA
ARCHITECT & ENGINEER
PARKRING 11 - 8002 ZÜRICH, SUISSE
TEL: (+41) 44 204 5000 FAX: (+41) 44 204 5002

HUITT~ZOLLARS
Huitt-Zollars, Inc. Dallas
1717 McKinney Avenue, Suite 1400
Dallas, Texas 5202-1236

SCALE	TITLE
1/128" = 1'-0"	PRINCIPLE ELEVATION & PLAN VIEW
DATE: October 2011	
DRAWN BY: ---- / CHECKED: --	DRAWING NO. P-00020

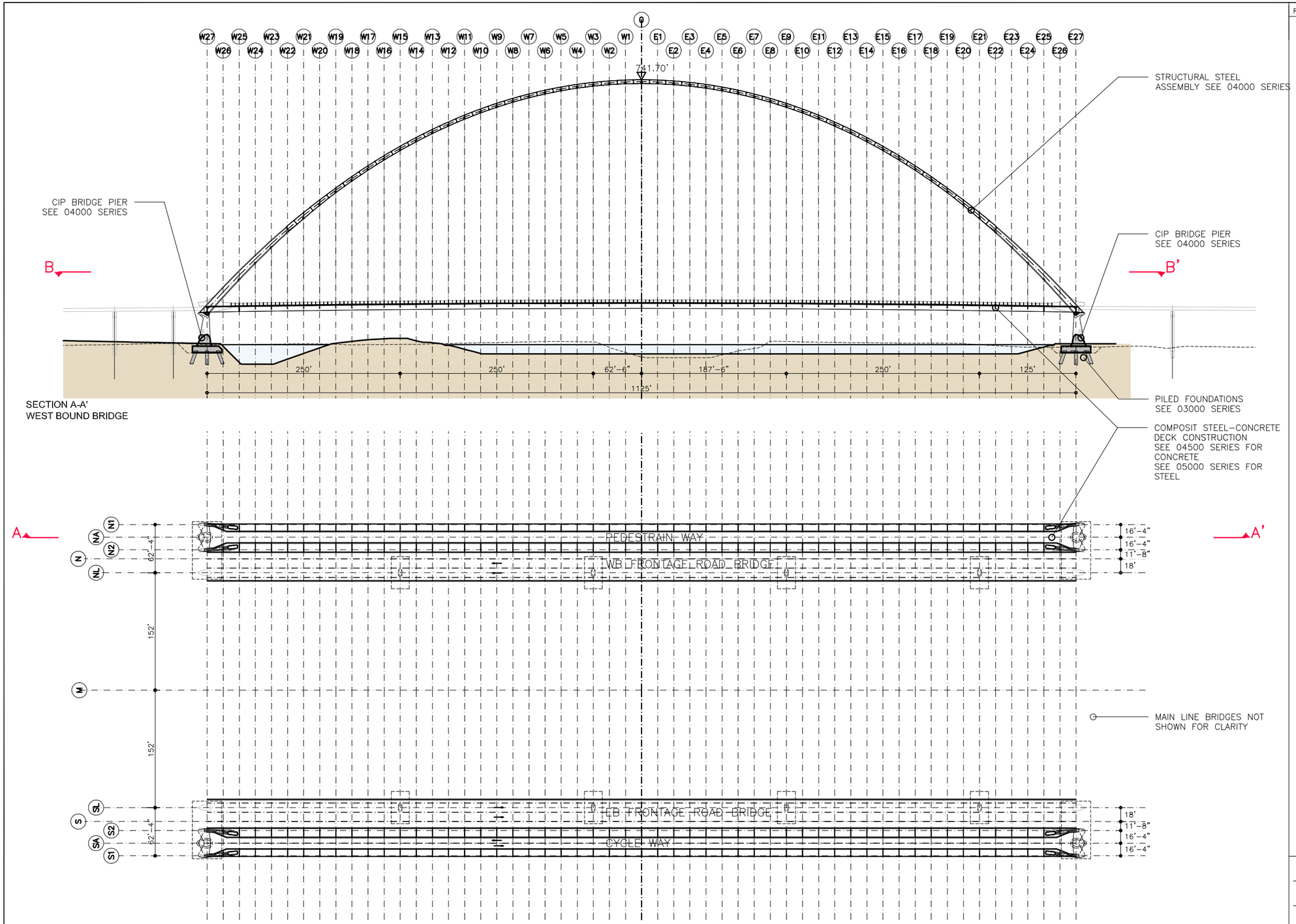

SECTION A-A'
WEST BOUND BRIDGE

PLAN B-B'
(DECK LEVEL)

REV.	DATE	TITLE

NOTES:
ALL COORDINATES ARE RELATIVE TO PROJECT REFERENCE POINT, SEE PLAN P-00006

FOR INFORMATION ONLY

IH30 FRONTAGE ROAD BRIDGES
DALLAS, TX, USA

50% ENGINEERING

WESTBOUND BRIDGE GENERAL PLANS

(C) 2011 SANTIAGO CALATRAVA VALLS. ALL RIGHTS RESERVED.
ALL DRAWINGS ARE FOR DESIGN PURPOSES ONLY. NOT TO BE USED FOR BIDDING OR CONSTRUCTION.

CITY OF DALLAS

Texas Department of Transportation

SANTIAGO CALATRAVA
ARCHITECT & ENGINEER
PARKRING 11 - 8002 ZÜRICH, SUISSE
TEL: (+41) 44 204 5000 FAX: (+41) 44 204 5002

HUITT~ZOLLARS
Huitt-Zollars, Inc. Dallas
1717 McKinney Avenue, Suite 1400
Dallas, Texas 5202-1236

SCALE	TITLE
1/128" = 1'-0"	LONGITUDINAL & HORIZONTAL PRINCIPAL SECTIONS
DATE: October 2011	
DRAWN BY: --- / CHECKED: --	DRAWING NO. P-00030

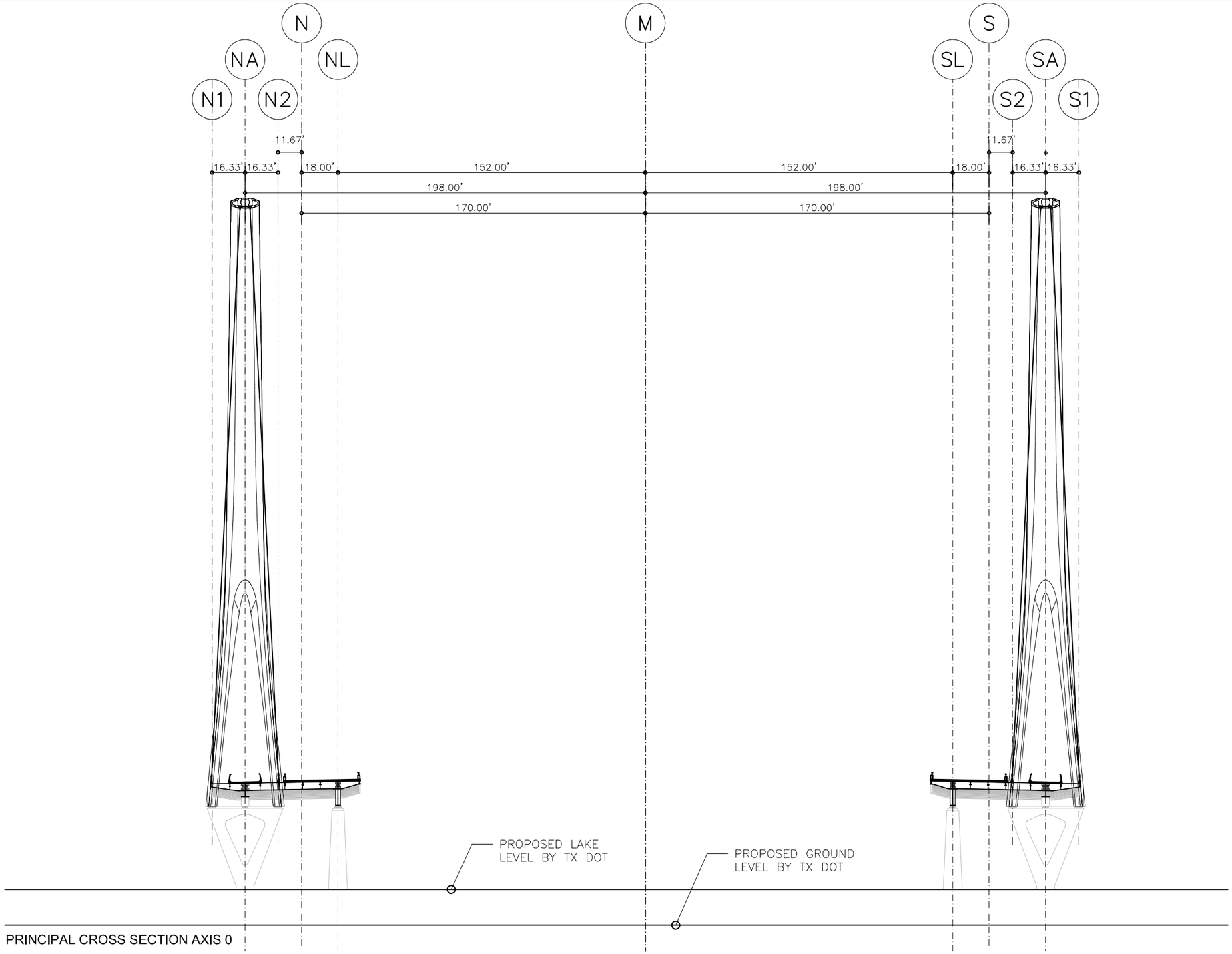

PRINCIPAL CROSS SECTION AXIS 0

REV.	DATE	TITLE

NOTES:
ALL COORDINATES ARE RELATIVE TO PROJECT REFERENCE POINT, SEE PLAN P-00006

FOR INFORMATION ONLY

IH30 FRONTAGE ROAD BRIDGES
DALLAS, TX, USA

50% ENGINEERING

EASTBOUND BRIDGE GENERAL PLANS

(C) 2011 SANTIAGO CALATRAVA VALLS. ALL RIGHTS RESERVED.
ALL DRAWINGS ARE FOR DESIGN PURPOSES ONLY. NOT TO BE USED FOR BIDDING OR CONSTRUCTION.

CITY OF DALLAS

©2013 Texas Department of Transportation

SANTIAGO CALATRAVA
ARCHITECT & ENGINEER
PARKRING 11 - 8002 ZÜRICH, SUISSE
TEL: (+41) 44 204 5000 FAX: (+41) 44 204 5002

HUITT~ZOLLARS
Huitt-Zollars, Inc. Dallas
1717 McKinney Avenue, Suite 1400
Dallas, Texas 5202-1236

SCALE	TITLE
1"=50'-0"	PRINCIPAL CROSS SECTION AXIS 0
DATE: October 2011	
DRAWN BY: ---- / CHECKED: --	DRAWING NO. P-00040

REV.	DATE	TITLE

NOTES:
ALL COORDINATES ARE RELATIVE TO PROJECT REFERENCE POINT, SEE PLAN P-00006

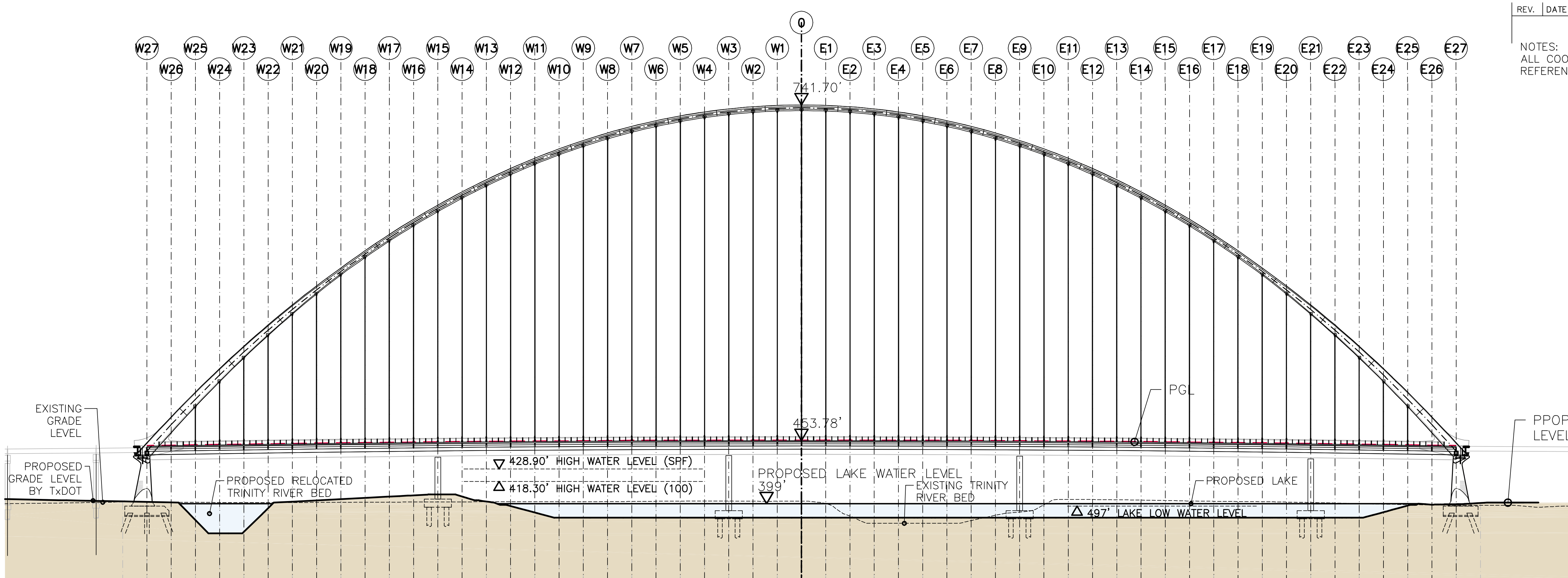

ELEVATION A-A' EAST BOUND BRIDGE

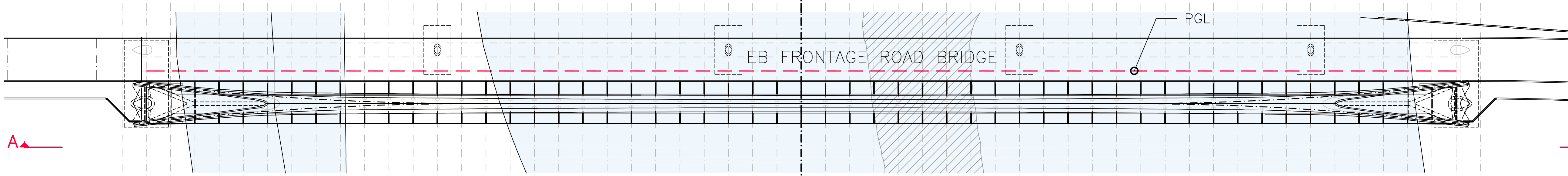

FOR INFORMATION ONLY

PLAN EAST BOUND BRIDGE

PROFILE GRADE LINE (PGL)	PROPOSED GRADE LEVEL (BY TxDOT)
448.88'	400.82'
449.06'	400.59'
449.41'	400.24'
449.74'	385.00'
450.05'	373.50'
450.36'	374.79'
450.65'	395.23'
450.93'	400.83'
451.19'	401.90'
451.45'	402.98'
451.69'	404.06'
451.91'	405.14'
452.13'	406.28'
452.33'	407.00'
452.51'	405.18'
452.69'	401.00'
452.85'	397.00'
453.00'	391.40'
453.14'	387.00'
453.26'	387.00'
453.37'	387.00'
453.47'	387.00'
453.55'	387.00'
453.62'	387.00'
453.68'	387.00'
453.73'	387.00'
453.76'	387.00'
453.78'	387.00'
453.78'	387.00'
453.78'	387.00'
453.76'	387.00'
453.73'	387.00'
453.68'	387.00'
453.62'	387.00'
453.55'	387.00'
453.47'	387.00'
453.37'	387.00'
453.26'	387.00'
453.14'	387.00'
453.00'	387.00'
452.85'	387.00'
452.69'	387.00'
452.51'	387.00'
452.33'	387.00'
452.13'	387.00'
451.91'	387.00'
451.69'	387.00'
451.45'	387.00'
451.19'	387.00'
450.93'	387.00'
450.65'	387.00'
450.36'	387.00'
450.05'	391.74'
449.74'	397.41'
449.41'	398.28'
449.06'	398.64'
448.88'	399.06'

CHART OF LEVELS

IH30 FRONTAGE ROAD BRIDGES
DALLAS, TX, USA

50% ENGINEERING

EASTBOUND BRIDGE GENERAL PLANS

(C) 2011 SANTIAGO CALATRAVA VALLS. ALL RIGHTS RESERVED.
ALL DRAWINGS ARE FOR DESIGN PURPOSES ONLY. NOT TO BE USED FOR BIDDING OR CONSTRUCTION.

CITY OF DALLAS

©2011 Texas Department of Transportation

SANTIAGO CALATRAVA
ARCHITECT & ENGINEER
PARKRING 11 - 8002 ZÜRICH, SUISSE
TEL: (+41) 44 204 5000 FAX: (+41) 44 204 5002

HUITT~ZOLLARS
Huitt-Zollars, Inc. Dallas
1717 McKinney Avenue, Suite 1400
Dallas, Texas 5202-1236

1/128"=1'-0'	PROJECT HEIGHTS AND FLOOD LEVELS
October 2011	
---- --	P-00100

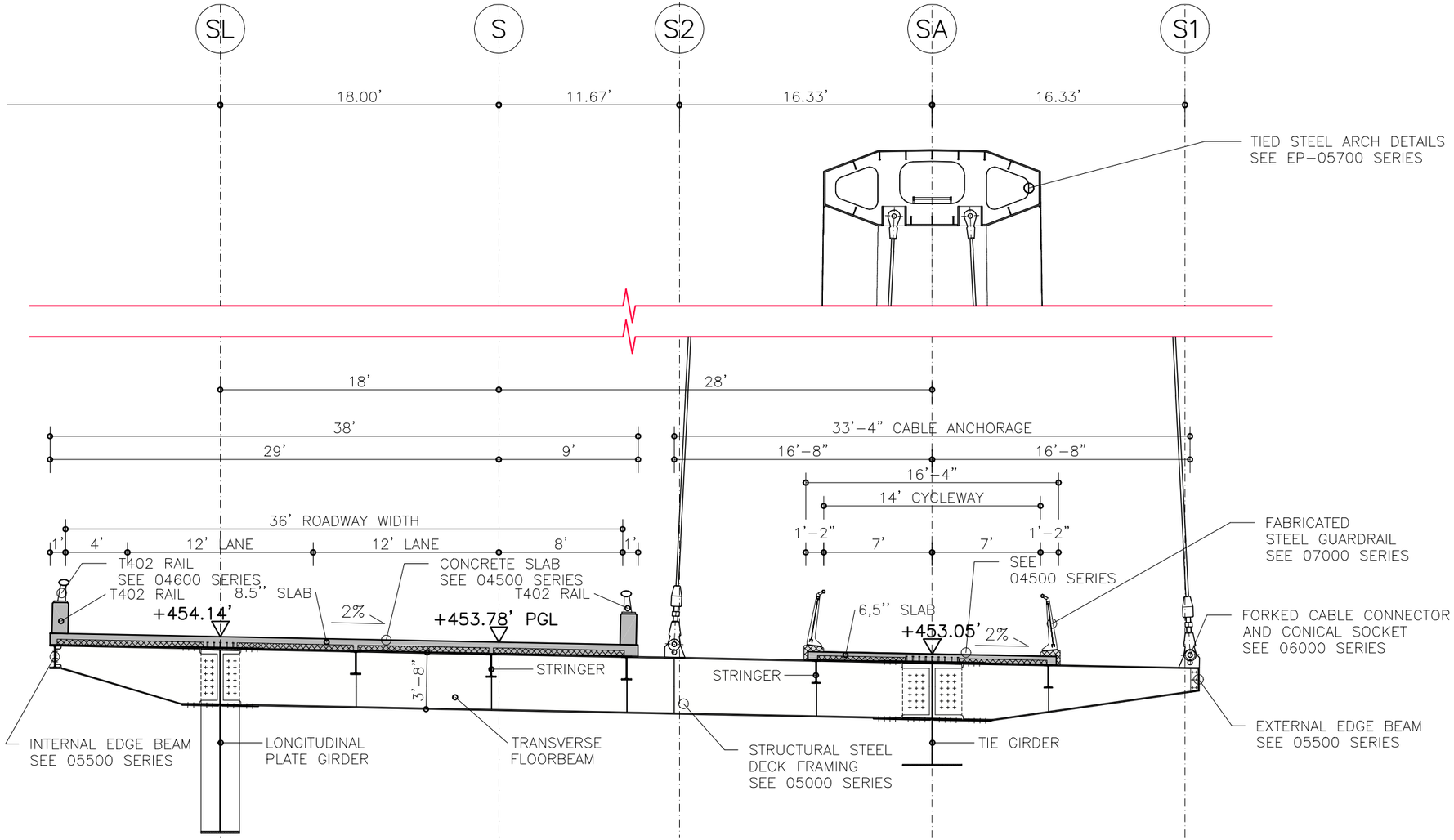

CROSS SECTION AXIS 0 (AT TRANSVERSE FLOORBEAM)

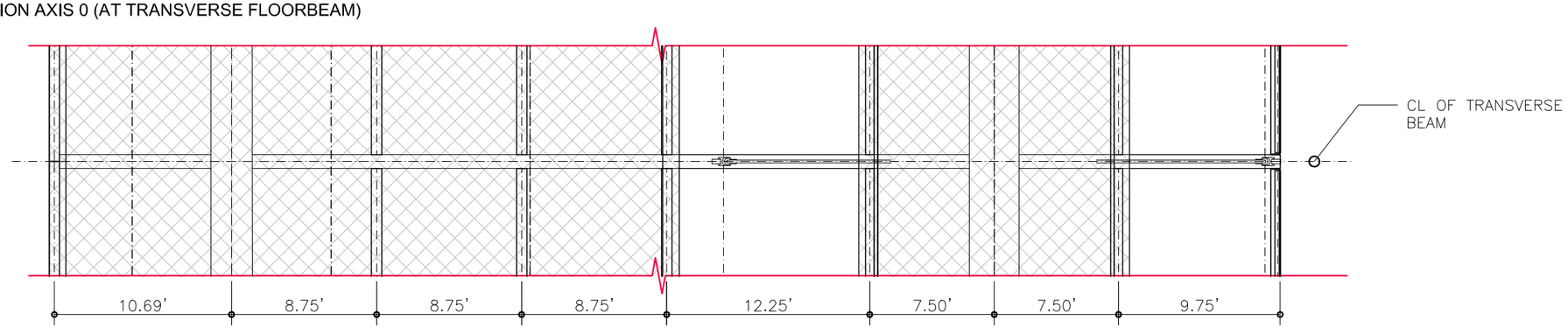

PARTIAL PLAN AT DECK LEVEL

REV.	DATE	TITLE

NOTES:
ALL COORDINATES ARE RELATIVE TO PROJECT REFERENCE POINT, SEE PLAN P-00006

FOR INFORMATION ONLY

IH30 FRONTAGE ROAD BRIDGES
DALLAS, TX, USA

50% ENGINEERING

EASTBOUND BRIDGE GENERAL PLANS

(C) 2011 SANTIAGO CALATRAVA VALLS. ALL RIGHTS RESERVED.
ALL DRAWINGS ARE FOR DESIGN PURPOSES ONLY. NOT TO BE USED FOR BIDDING OR CONSTRUCTION.

CITY OF DALLAS

©2011 Texas Department of Transportation

SANTIAGO CALATRAVA
ARCHITECT & ENGINEER
PARKRING 11 - 8002 ZÜRICH, SUISSE
TEL: (+41) 44 204 5000 FAX: (+41) 44 204 5002

HUITT~ZOLLARS
Huitt-Zollars, Inc. Dallas
1717 McKinney Avenue, Suite 1400
Dallas, Texas 5202-1236

SCALE	TITLE
1/8" = 1'-0"	CROSS SECTION AXIS 0
DATE: October 2011	
DRAWN BY: ---- / CHECKED: --	DRAWING NO. EP-01010

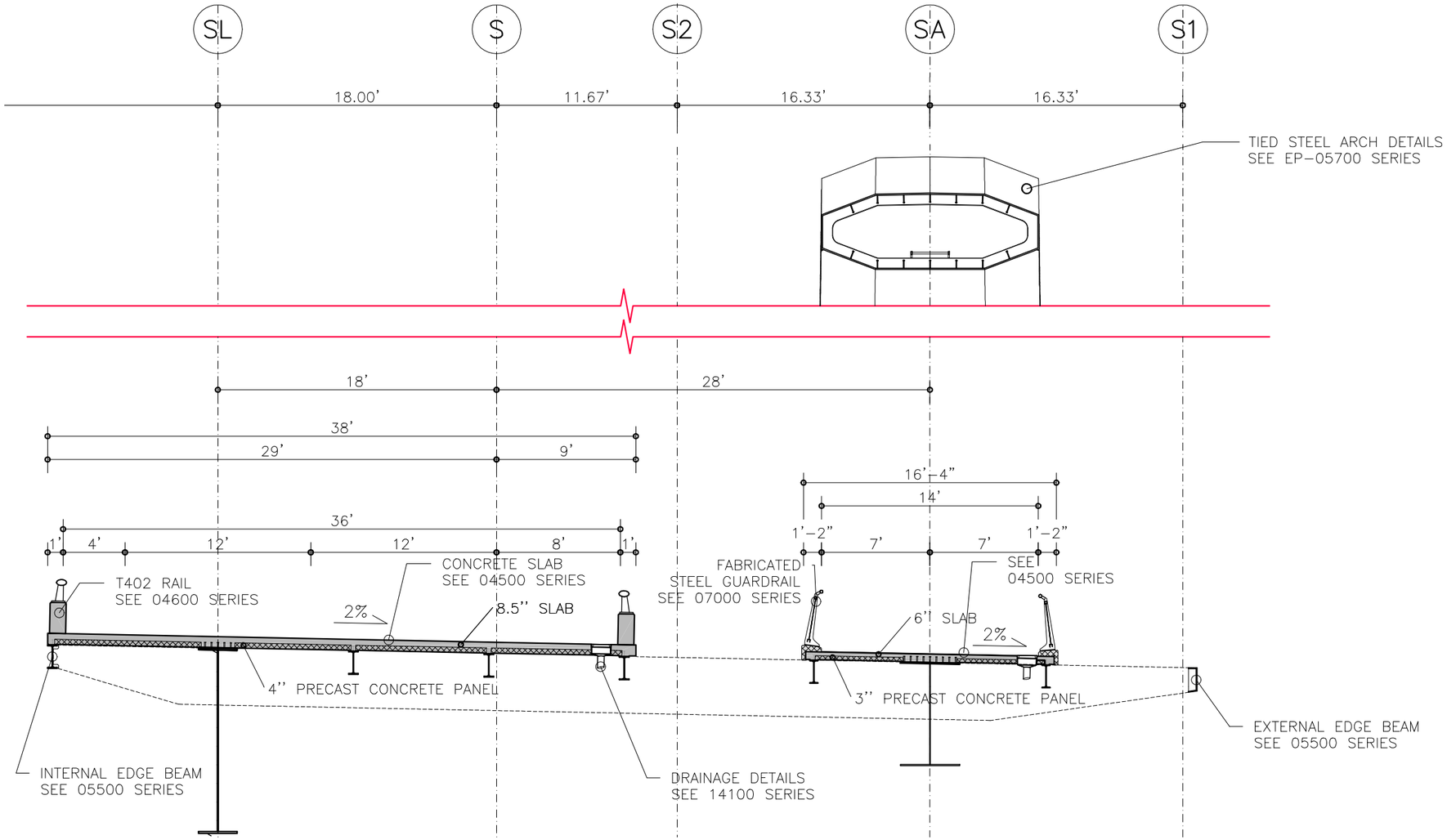

CROSS SECTION AXIS 0 (AT TRANSVERSE FLOORBEAM)

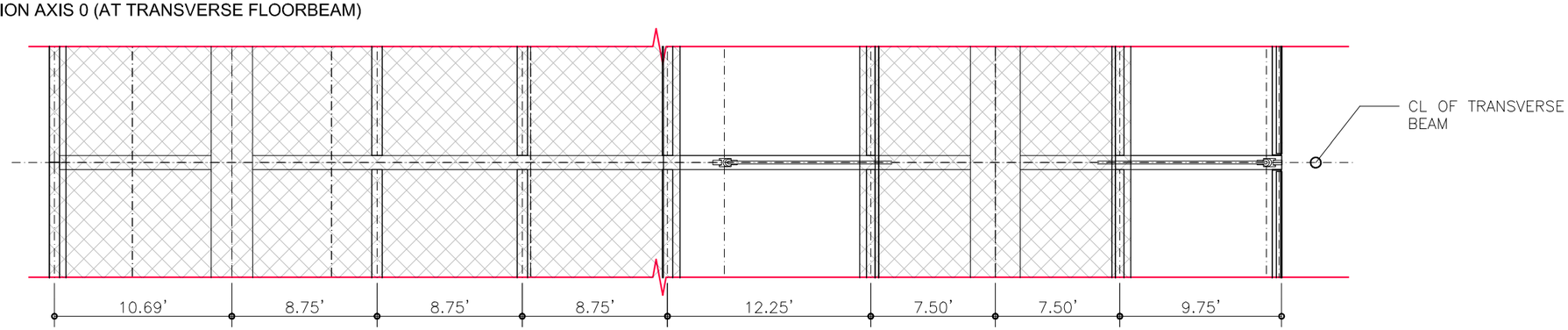

PARTIAL PLAN AT DECK LEVEL

REV.	DATE	TITLE

NOTES:
ALL COORDINATES ARE RELATIVE TO PROJECT REFERENCE POINT, SEE PLAN P-00006

FOR INFORMATION ONLY

IH30 FRONTAGE ROAD BRIDGES
DALLAS, TX, USA

50% ENGINEERING

EASTBOUND BRIDGE GENERAL PLANS

(C) 2011 SANTIAGO CALATRAVA VALLS. ALL RIGHTS RESERVED.
ALL DRAWINGS ARE FOR DESIGN PURPOSES ONLY. NOT TO BE USED FOR BIDDING OR CONSTRUCTION.

CITY OF DALLAS

©2011 Texas Department of Transportation

SANTIAGO CALATRAVA
ARCHITECT & ENGINEER
PARKRING 11 - 8002 ZÜRICH, SUISSE
TEL: (+41) 44 204 5000 FAX: (+41) 44 204 5002

HUITT~ZOLLARS
Huitt-Zollars, Inc. Dallas
1717 McKinney Avenue, Suite 1400
Dallas, Texas 5202-1236

SCALE 1/8"=1'-0"
DATE October 2011
DRAWN BY ----
CHECKED --
TITLE CROSS SECTION BETWEEN AXIS 0 AND 1
DRAWING NO. EP-01020

REV.	DATE	TITLE

NOTES:
ALL COORDINATES ARE RELATIVE TO PROJECT REFERENCE POINT, SEE PLAN P-00006

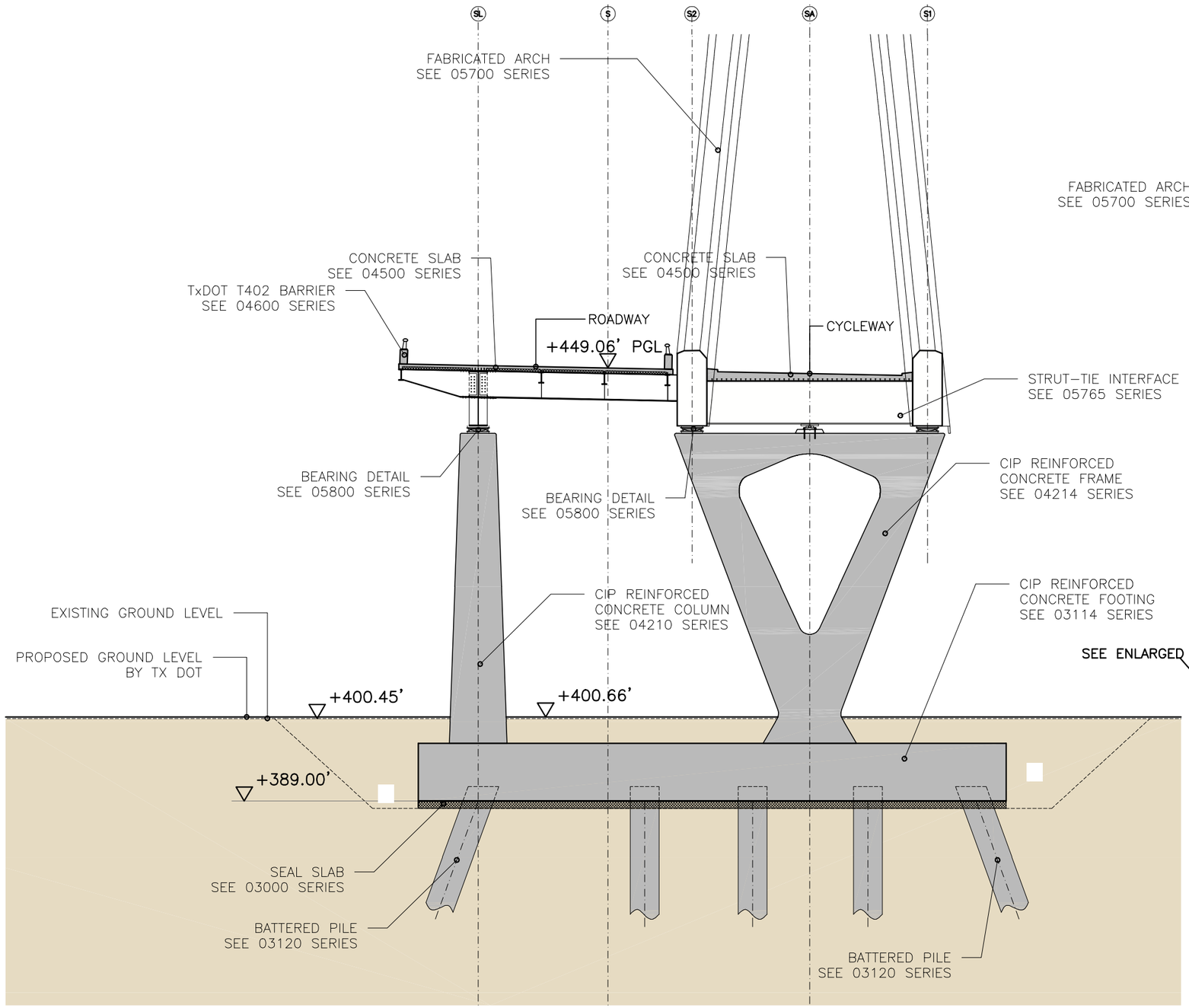

CROSS SECTION AT BEARING (SCALE 1/16" = 1'-0")

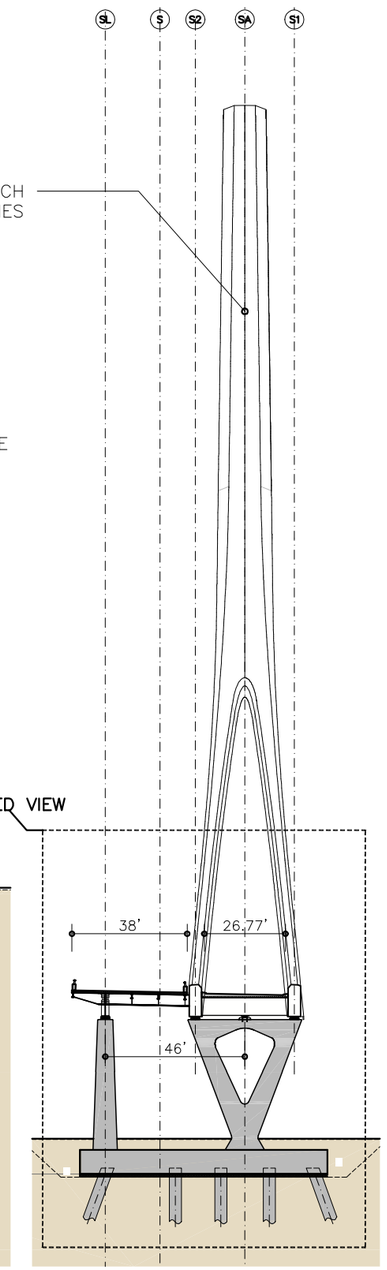

CROSS SECTION AT BEARING

FOR INFORMATION ONLY

IH30 FRONTAGE ROAD BRIDGES
DALLAS, TX, USA

50% ENGINEERING

EASTBOUND BRIDGE GENERAL PLANS

(C) 2011 SANTIAGO CALATRAVA VALLS. ALL RIGHTS RESERVED.
ALL DRAWINGS ARE FOR DESIGN PURPOSES ONLY. NOT TO BE USED FOR BIDDING OR CONSTRUCTION.

CITY OF DALLAS

Texas Department of Transportation

SANTIAGO CALATRAVA
ARCHITECT & ENGINEER
PARKRING 11 - 8002 ZÜRICH, SUISSE
TEL: (+41) 44 204 5000 FAX: (+41) 44 204 5002

HUITT~ZOLLARS
Huitt-Zollars, Inc. Dallas
1717 McKinney Avenue, Suite 1400
Dallas, Texas 5202-1236

SCALE	TITLE
1/16" = 1'-0"	CROSS SECTION AT BEARING
DATE: October 2011	
DRAWN BY: --- / CHECKED: --	DRAWING NO. EP-01030

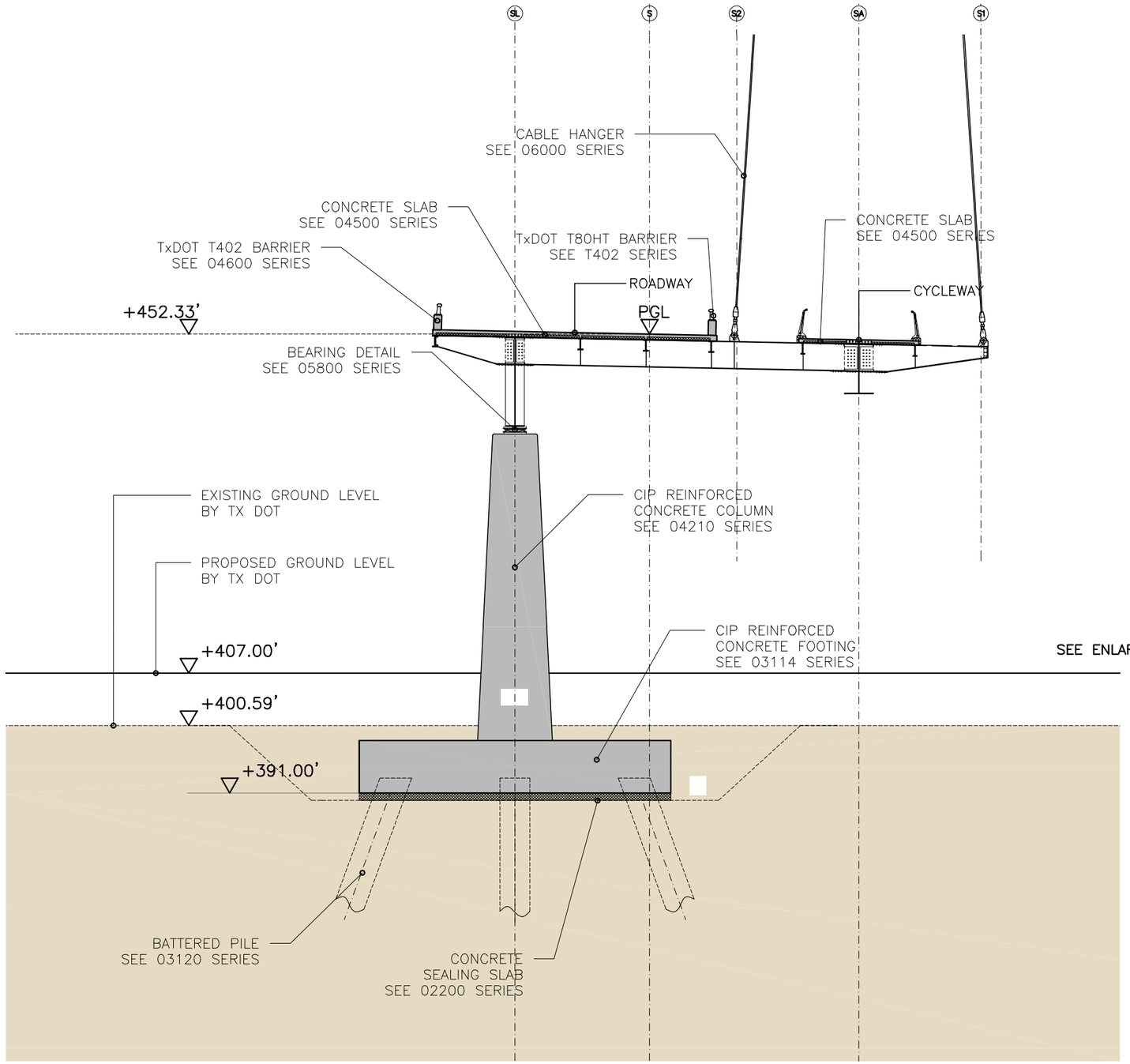

CROSS SECTION AT BRIDGE DECK PIER SUPPORT (SCALE 1/16" = 1'-0")

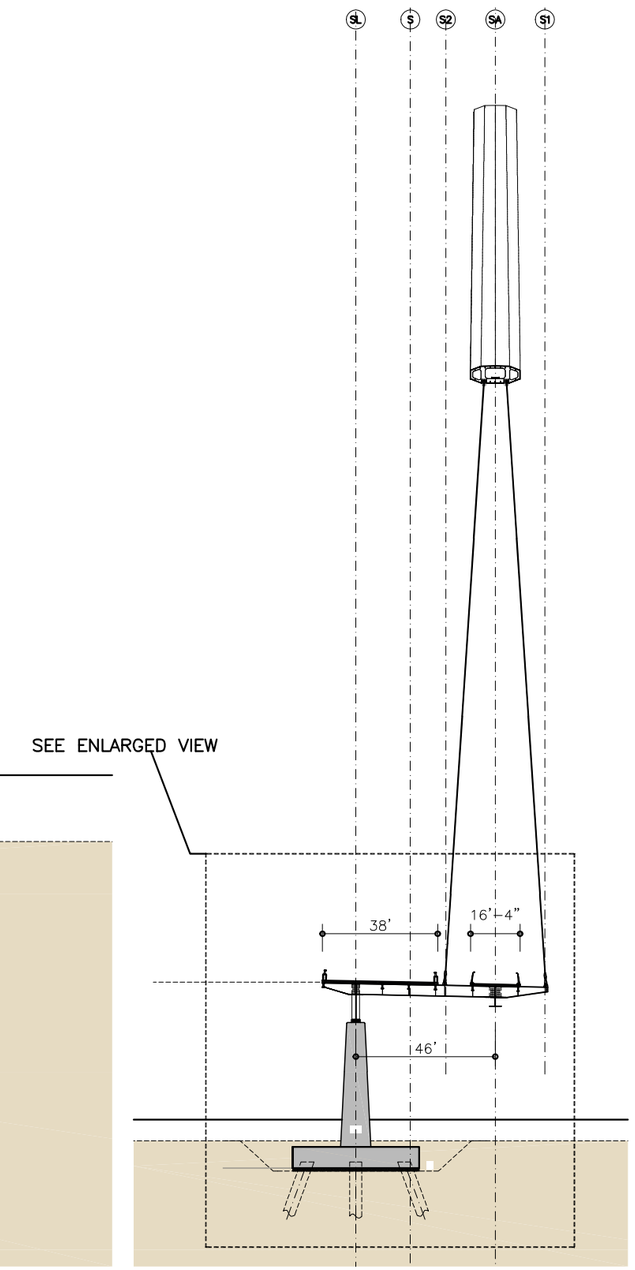

CROSS SECTION AT BRIDGE DECK PIER SUPPORT

REV.	DATE	TITLE

NOTES:
ALL COORDINATES ARE RELATIVE TO PROJECT REFERENCE POINT, SEE PLAN P-00006

FOR INFORMATION ONLY

IH30 FRONTAGE ROAD BRIDGES
DALLAS, TX, USA

50% ENGINEERING

EASTBOUND BRIDGE GENERAL PLANS

(C) 2011 SANTIAGO CALATRAVA VALLS. ALL RIGHTS RESERVED.
ALL DRAWINGS ARE FOR DESIGN PURPOSES ONLY. NOT TO BE USED FOR BIDDING OR CONSTRUCTION.

CITY OF DALLAS

©2011 Texas Department of Transportation

SANTIAGO CALATRAVA
ARCHITECT & ENGINEER
PARKRING 11 - 8002 ZÜRICH, SUISSE
TEL: (+41) 44 204 5000 FAX: (+41) 44 204 5002

HUITT~ZOLLARS
Huitt-Zollars, Inc. Dallas
1717 McKinney Avenue, Suite 1400
Dallas, Texas 5202-1236

SCALE 1/16"=1'
DATE October 2011
DRAWN BY ----
CHECKED --
TITLE CROSS SECTION AT BRIDGE DECK PIER SUPPORT
DRAWING NO. EP-01040

REV.	DATE	TITLE

NOTES:
ALL COORDINATES ARE RELATIVE TO PROJECT REFERENCE POINT, SEE PLAN P-00006

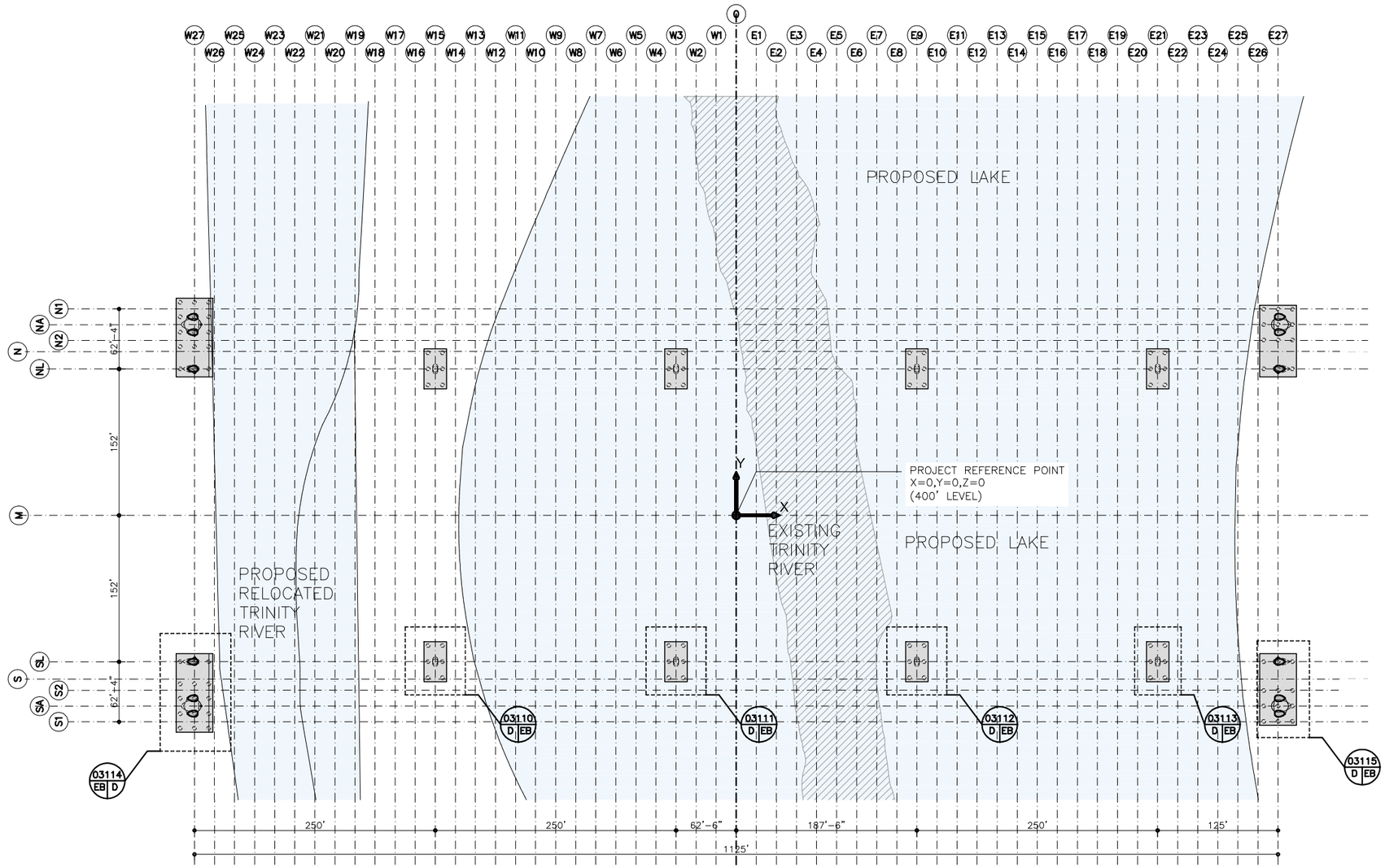

FOR INFORMATION ONLY

IH30 FRONTAGE ROAD BRIDGES
DALLAS, TX, USA

50% ENGINEERING

EASTBOUND BRIDGE FOUNDATION PLANS

(C) 2011 SANTIAGO CALATRAVA VALLS. ALL RIGHTS RESERVED.
ALL DRAWINGS ARE FOR DESIGN PURPOSES ONLY. NOT TO BE USED FOR BIDDING OR CONSTRUCTION.

CITY OF DALLAS

Texas Department of Transportation

SANTIAGO CALATRAVA
ARCHITECT & ENGINEER
PARKRING 11 - 8002 ZÜRICH, SUISSE
TEL: (+41) 44 204 5000 FAX: (+41) 44 204 5002

HUITT~ZOLLARS
Huitt-Zollars, Inc. Dallas
1717 McKinney Avenue, Suite 1400
Dallas, Texas 5202-1236

SCALE	TITLE
----	OVERVIEW FOUNDATIONS
DATE October 2011	
DRAWN BY ---- / CHECKED --	DRAWING NO. EP-03100

REV.	DATE	TITLE

NOTES:
ALL COORDINATES ARE RELATIVE TO PROJECT REFERENCE POINT, SEE PLAN P-00006

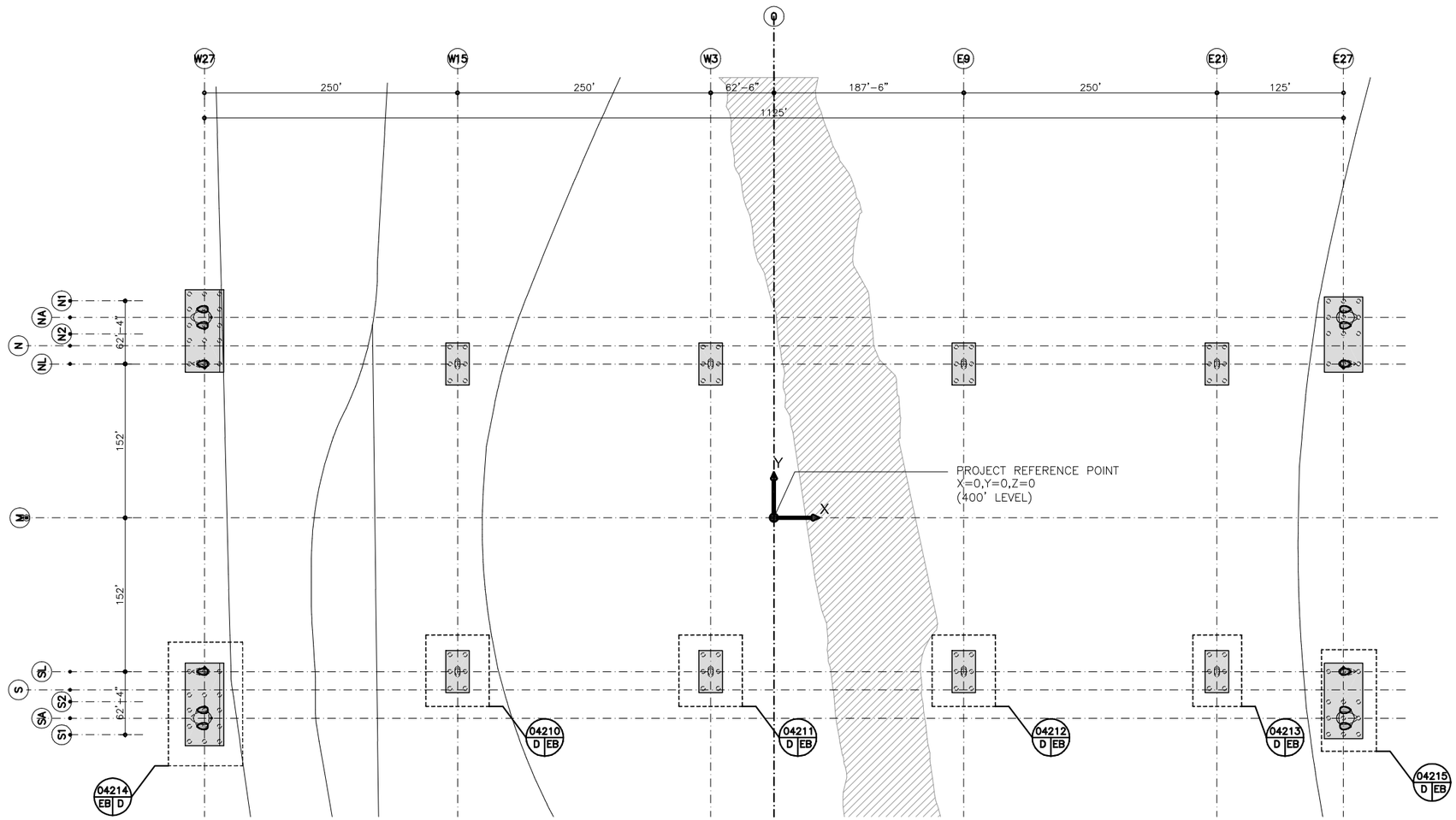

FOR INFORMATION ONLY

IH30 FRONTAGE ROAD BRIDGES
DALLAS, TX, USA

50% ENGINEERING

EASTBOUND BRIDGE CONCRETE PLANS

(C) 2011 SANTIAGO CALATRAVA VALLS. ALL RIGHTS RESERVED.
ALL DRAWINGS ARE FOR DESIGN PURPOSES ONLY. NOT TO BE USED FOR BIDDING OR CONSTRUCTION.

CITY OF DALLAS

Texas Department of Transportation

SANTIAGO CALATRAVA
ARCHITECT & ENGINEER
PARKRING 11 - 8002 ZÜRICH, SUISSE
TEL: (+41) 44 204 5000 FAX: (+41) 44 204 5002

HUITT~ZOLLARS
Huitt-Zollars, Inc. Dallas
1717 McKinney Avenue, Suite 1400
Dallas, Texas 5202-1236

SCALE	TITLE
----	OVERVIEW CONCRETE
DATE: October 2011	
DRAWN BY: ---- / CHECKED: --	DRAWING NO. EP-04100

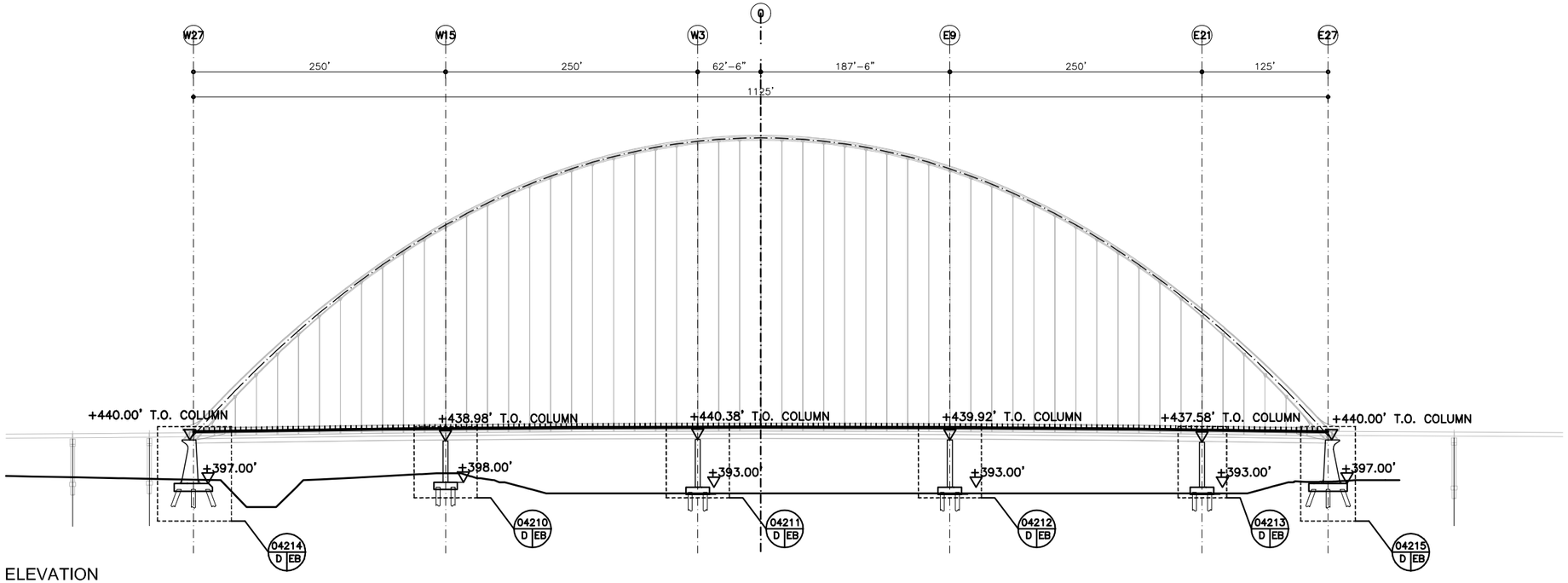

ELEVATION
EAST BOUND BRIDGE

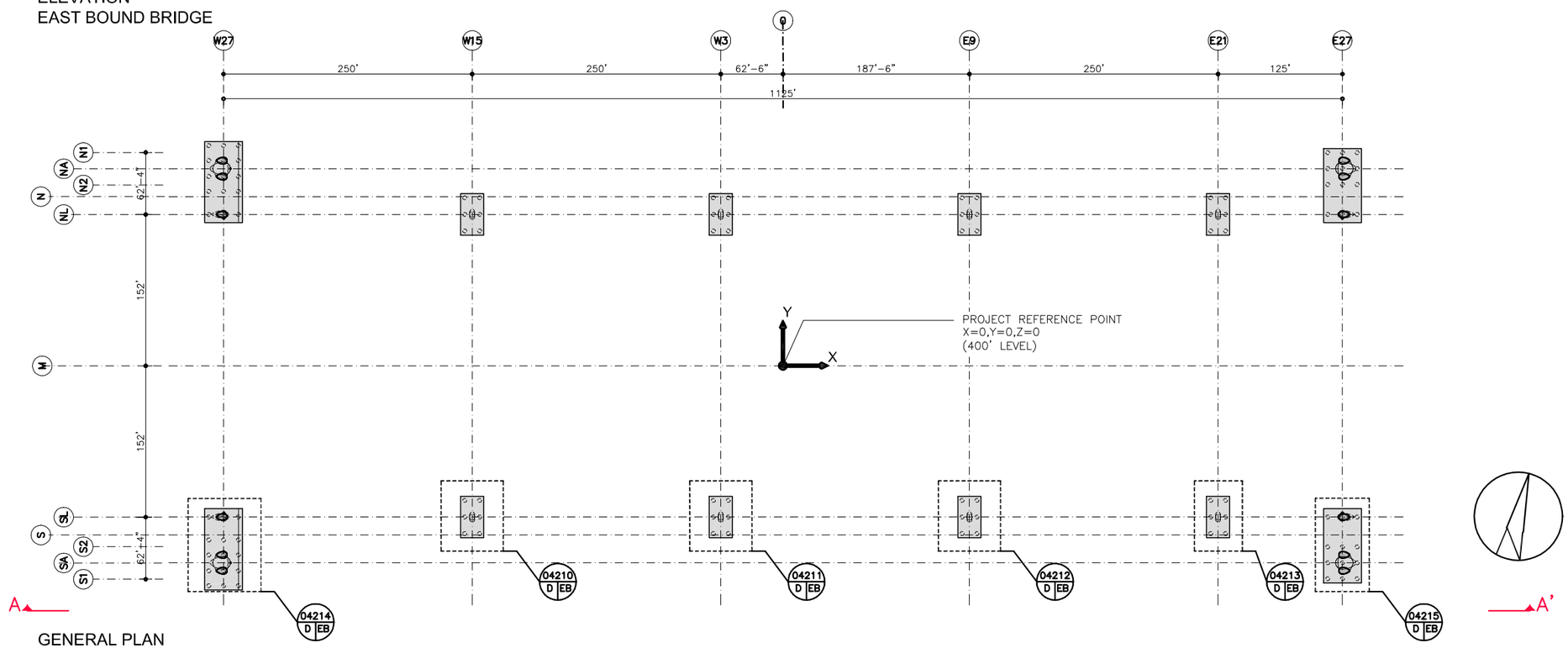

GENERAL PLAN

REV.	DATE	TITLE

NOTES:
ALL COORDINATES ARE RELATIVE TO PROJECT REFERENCE POINT, SEE PLAN P-00006

FOR INFORMATION ONLY

IH30 FRONTAGE ROAD BRIDGES
DALLAS, TX, USA

50% ENGINEERING

EASTBOUND BRIDGE CONCRETE PLANS

(C) 2011 SANTIAGO CALATRAVA VALLS. ALL RIGHTS RESERVED.
ALL DRAWINGS ARE FOR DESIGN PURPOSES ONLY. NOT TO BE USED FOR BIDDING OR CONSTRUCTION.

CITY OF DALLAS

Texas Department of Transportation

SANTIAGO CALATRAVA
ARCHITECT & ENGINEER
PARKRING 11 – 8002 ZÜRICH, SUISSE
TEL: (+41) 44 204 5000 FAX: (+41) 44 204 5002

HUITT~ZOLLARS
Huitt-Zollars, Inc. Dallas
1717 McKinney Avenue, Suite 1400
Dallas, Texas 5202-1236

SCALE ----
DATE October 2011
DRAWN BY ----
CHECKED "
TITLE CONCRETE ELEVATION
DRAWING NO. EP-04101

REV.	DATE	TITLE

NOTES:
ALL COORDINATES ARE RELATIVE TO PROJECT REFERENCE POINT, SEE PLAN P-00006

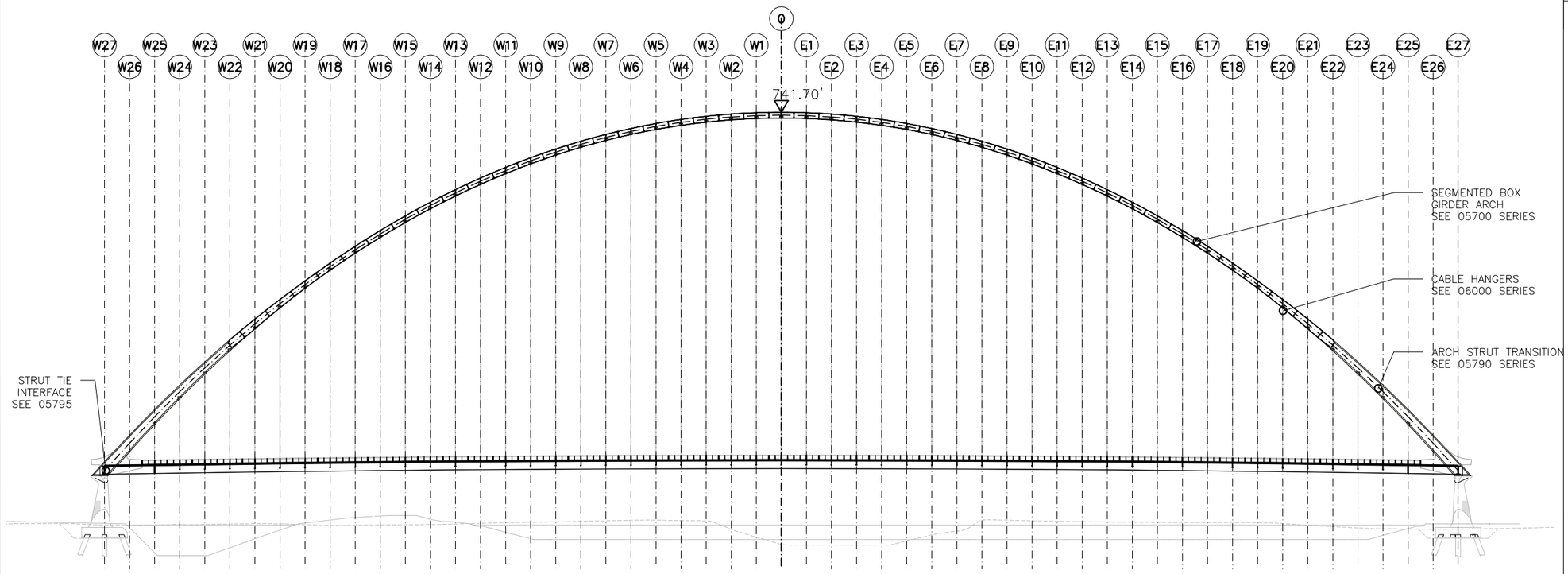

SECTION A-A' ON AXIS SA

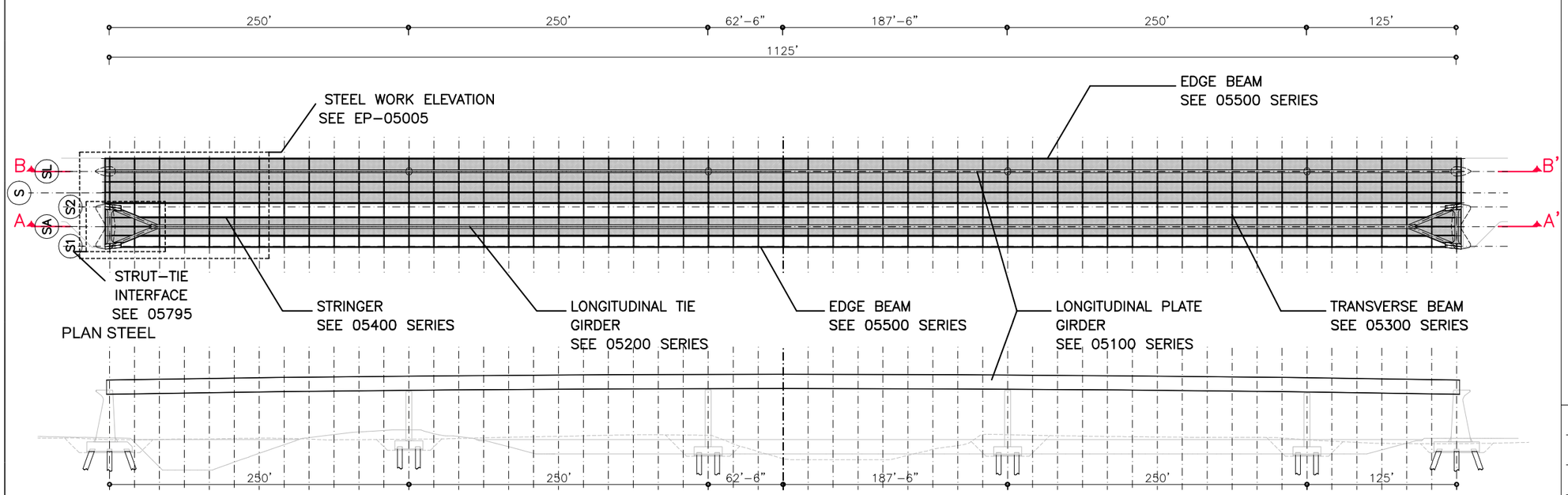

ELEVATION B-B' - PLATE GIRDER

FOR INFORMATION ONLY

IH30 FRONTAGE ROAD BRIDGES
DALLAS, TX, USA

50% ENGINEERING

EASTBOUND BRIDGE STEEL PLANS

(C) 2011 SANTIAGO CALATRAVA VALLS. ALL RIGHTS RESERVED.
ALL DRAWINGS ARE FOR DESIGN PURPOSES ONLY. NOT TO BE USED FOR BIDDING OR CONSTRUCTION.

CITY OF DALLAS

©2011 Texas Department of Transportation

SANTIAGO CALATRAVA
ARCHITECT & ENGINEER
PARKRING 11 - 8002 ZÜRICH, SUISSE
TEL: (+41) 44 204 5000 FAX: (+41) 44 204 5002

HUITT~ZOLLARS
Huitt-Zollars, Inc. Dallas
1717 McKinney Avenue, Suite 1400
Dallas, Texas 5202-1236

SCALE	TITLE
1"=100'-0"	OVERVIEW STEEL
DATE: October 2011	
DRAWN BY: ---- / CHECKED: --	DRAWING NO. EP-05000

REV.	DATE	TITLE

NOTES:
ALL COORDINATES ARE RELATIVE TO PROJECT REFERENCE POINT, SEE PLAN P-00006

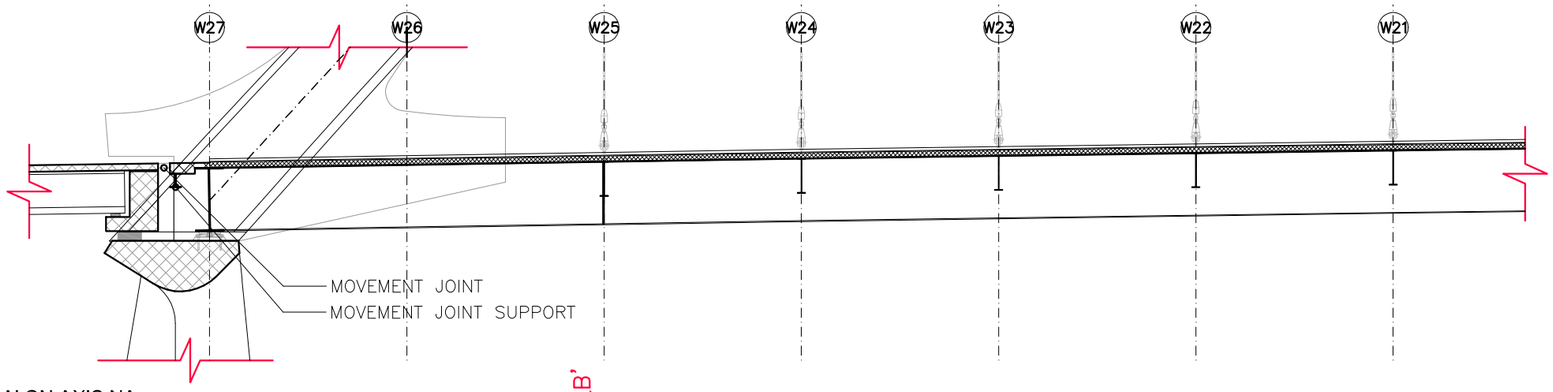

SECTION A-A' ON AXIS NA

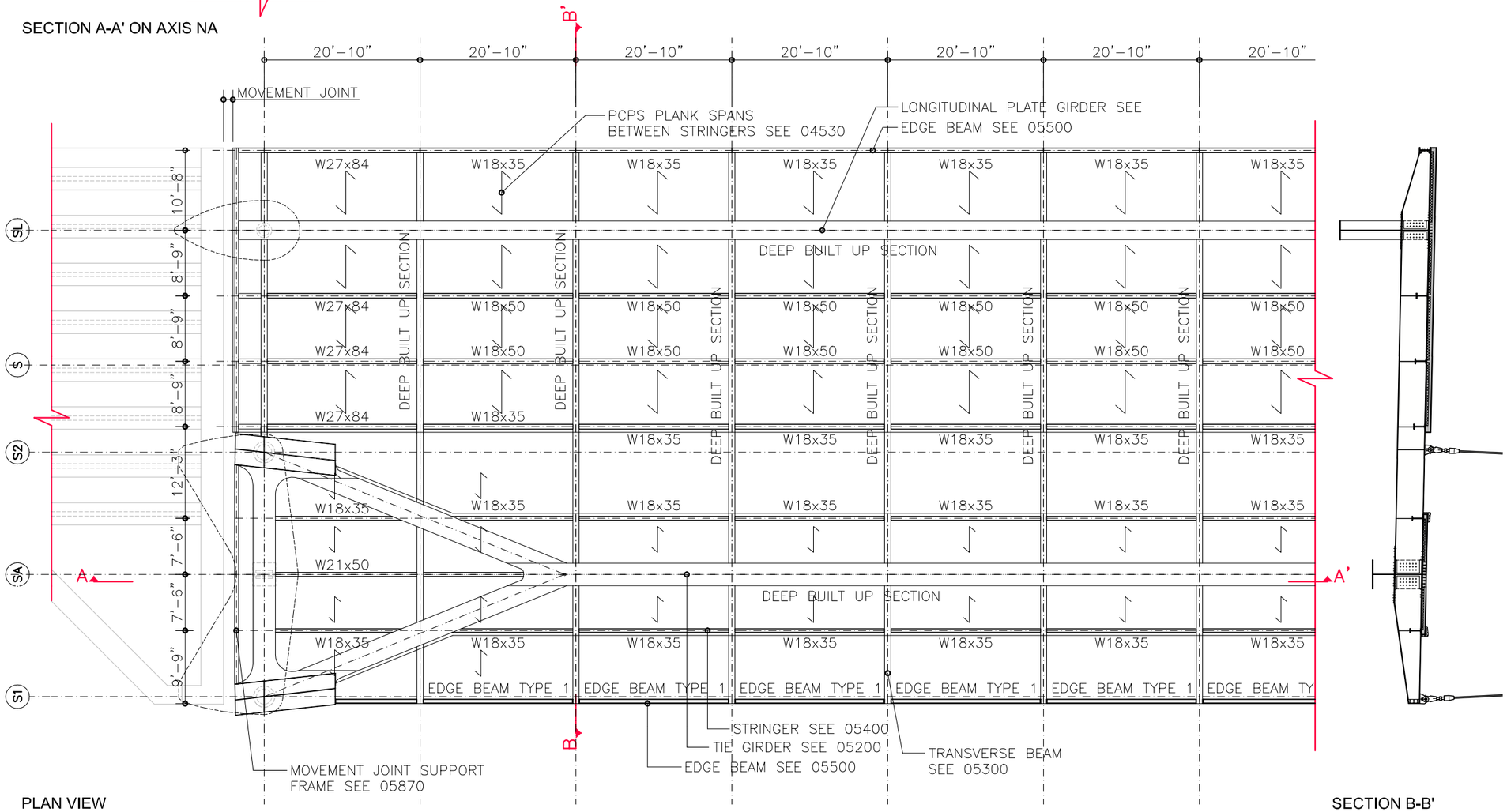

PLAN VIEW

SECTION B-B'

FOR INFORMATION ONLY

IH30 FRONTAGE ROAD BRIDGES
DALLAS, TX, USA

50% ENGINEERING

EASTBOUND BRIDGE STEEL PLANS

(C) 2011 SANTIAGO CALATRAVA VALLS. ALL RIGHTS RESERVED.
ALL DRAWINGS ARE FOR DESIGN PURPOSES ONLY. NOT TO BE USED FOR BIDDING OR CONSTRUCTION.

CITY OF DALLAS

Texas Department of Transportation

SANTIAGO CALATRAVA
ARCHITECT & ENGINEER
PARKRING 11 - 8002 ZÜRICH, SUISSE
TEL: (+41) 44 204 5000 FAX: (+41) 44 204 5002

HUITT~ZOLLARS
Huitt-Zollars, Inc. Dallas
1717 McKinney Avenue, Suite 1400
Dallas, Texas 5202-1236

SCALE	TITLE
1/16" = 1'-0"	STEEL WORK FRAMING PLAN 1
DATE: October 2011	
DRAWN BY: --- / CHECKED: --	DRAWING NO. EP-05005

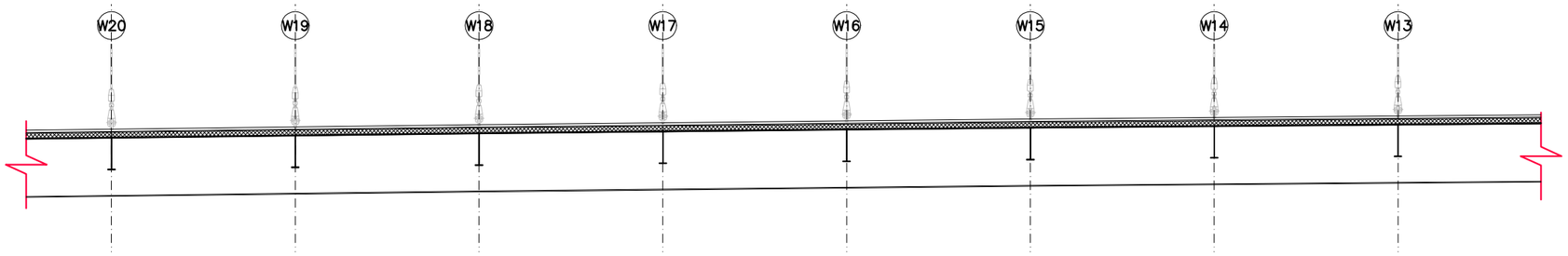

SECTION A-A' ON AXIS NA

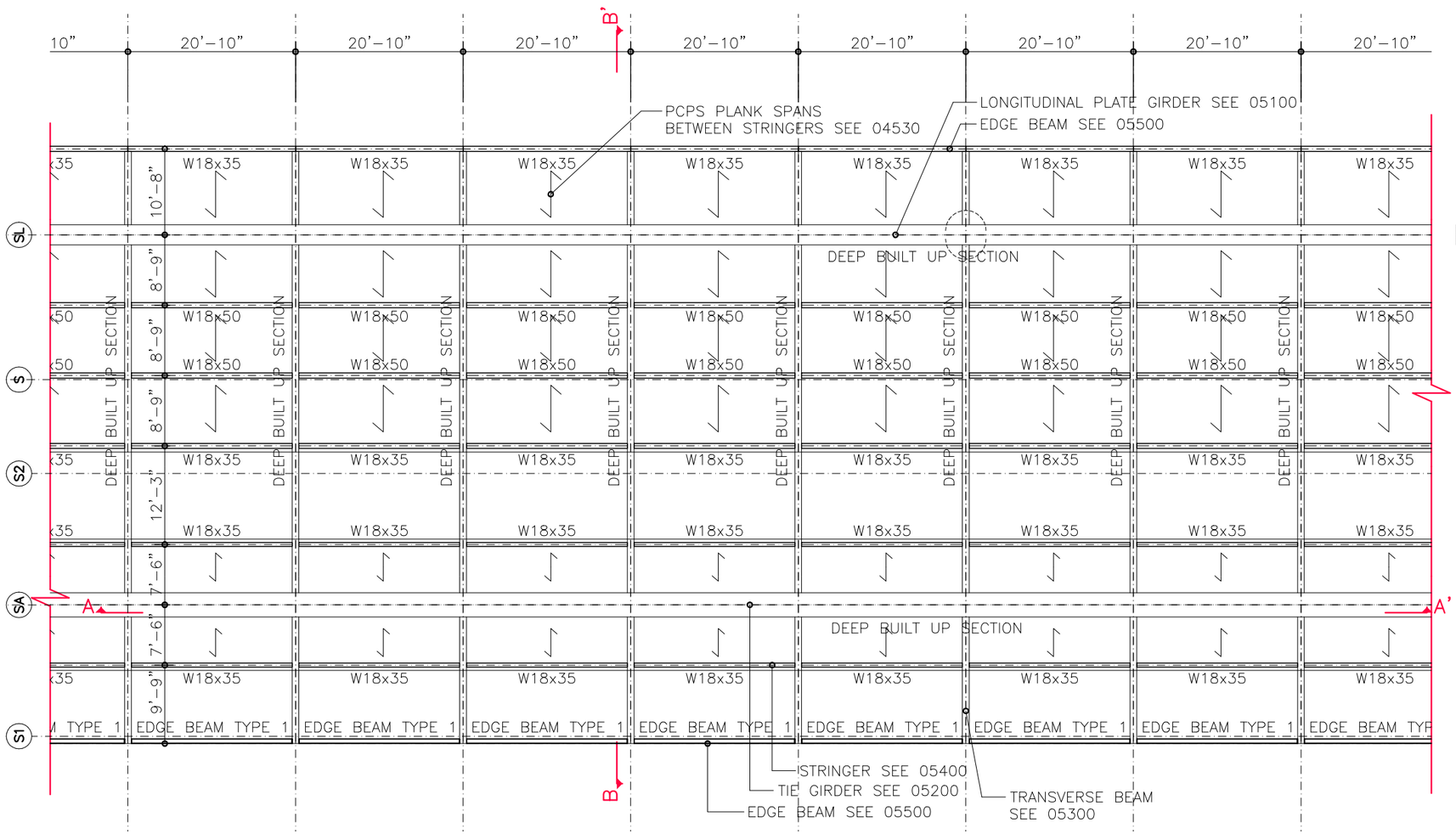

PLAN VIEW

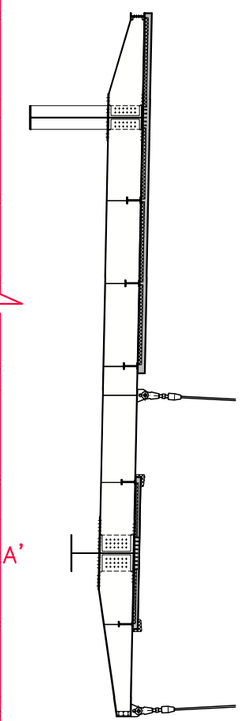

SECTION B-B'

REV.	DATE	TITLE

NOTES:
ALL COORDINATES ARE RELATIVE TO PROJECT REFERENCE POINT, SEE PLAN P-00006

FOR INFORMATION ONLY

IH30 FRONTAGE ROAD BRIDGES
DALLAS, TX, USA

50% ENGINEERING

EASTBOUND BRIDGE STEEL PLANS

(C) 2011 SANTIAGO CALATRAVA VALLS. ALL RIGHTS RESERVED.
ALL DRAWINGS ARE FOR DESIGN PURPOSES ONLY. NOT TO BE USED FOR BIDDING OR CONSTRUCTION.

CITY OF DALLAS

©2013 Texas Department of Transportation

SANTIAGO CALATRAVA
ARCHITECT & ENGINEER
PARKRING 11 - 8002 ZÜRICH, SUISSE
TEL: (+41) 44 204 5000 FAX: (+41) 44 204 5002

HUITT~ZOLLARS
Huitt-Zollars, Inc. Dallas
1717 McKinney Avenue, Suite 1400
Dallas, Texas 5202-1236

SCALE	TITLE
1/16" = 1'-0"	STEEL WORK FRAMING PLAN 2
DATE: October 2011	
DRAWN BY: ---- / CHECKED: --	DRAWING NO. EP-05006

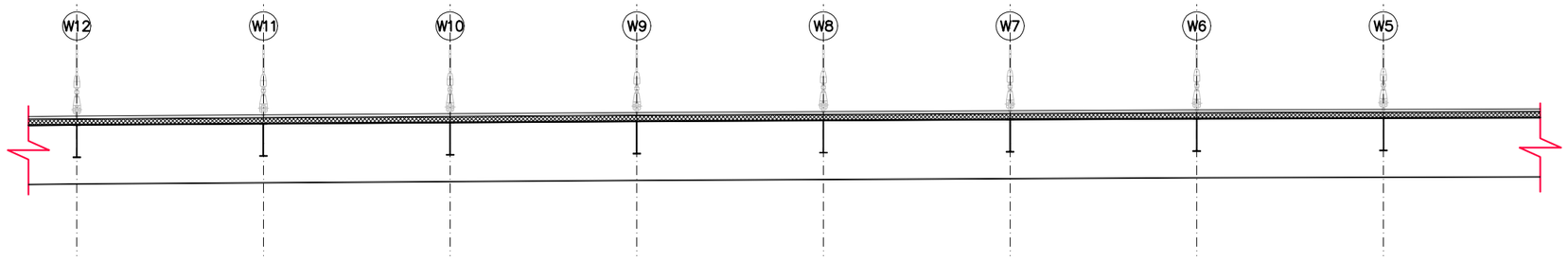

SECTION A-A' ON AXIS NA

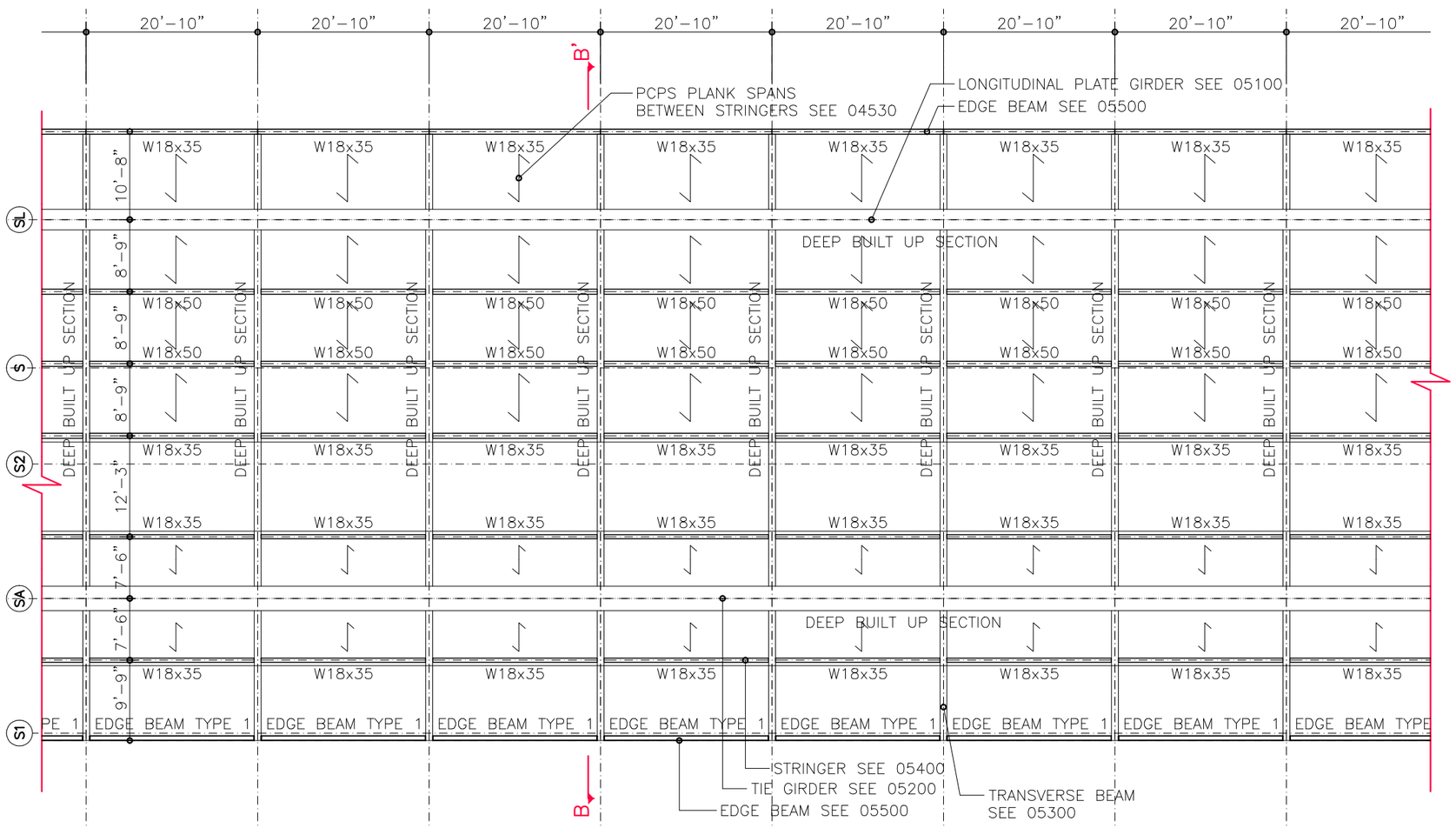

PLAN VIEW

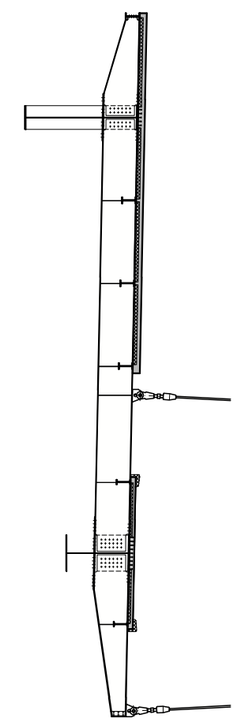

SECTION B-B'

REV.	DATE	TITLE

NOTES:
ALL COORDINATES ARE RELATIVE TO PROJECT REFERENCE POINT, SEE PLAN P-00006

FOR INFORMATION ONLY

IH30 FRONTAGE ROAD BRIDGES
DALLAS, TX, USA

50% ENGINEERING

EASTBOUND BRIDGE STEEL PLANS

(C) 2011 SANTIAGO CALATRAVA VALLS. ALL RIGHTS RESERVED.
ALL DRAWINGS ARE FOR DESIGN PURPOSES ONLY. NOT TO BE USED FOR BIDDING OR CONSTRUCTION.

CITY OF DALLAS

©2013 Texas Department of Transportation

SANTIAGO CALATRAVA
ARCHITECT & ENGINEER
PARKRING 11 - 8002 ZÜRICH, SUISSE
TEL: (+41) 44 204 5000 FAX: (+41) 44 204 5002

HUITT~ZOLLARS
Huitt-Zollars, Inc. Dallas
1717 McKinney Avenue, Suite 1400
Dallas, Texas 5202-1236

SCALE	TITLE
1/16" = 1'-0"	STEEL WORK FRAMING PLAN 3
DATE: October 2011	
DRAWN BY: ---- / CHECKED: --	DRAWING NO. EP-05007

REV.	DATE	TITLE

NOTES:
ALL COORDINATES ARE RELATIVE TO PROJECT REFERENCE POINT, SEE PLAN P-00006

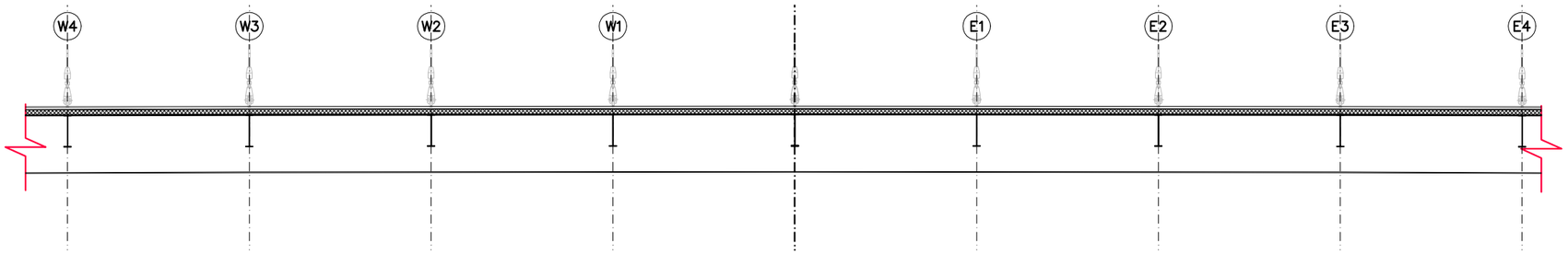

SECTION A-A' ON AXIS NA

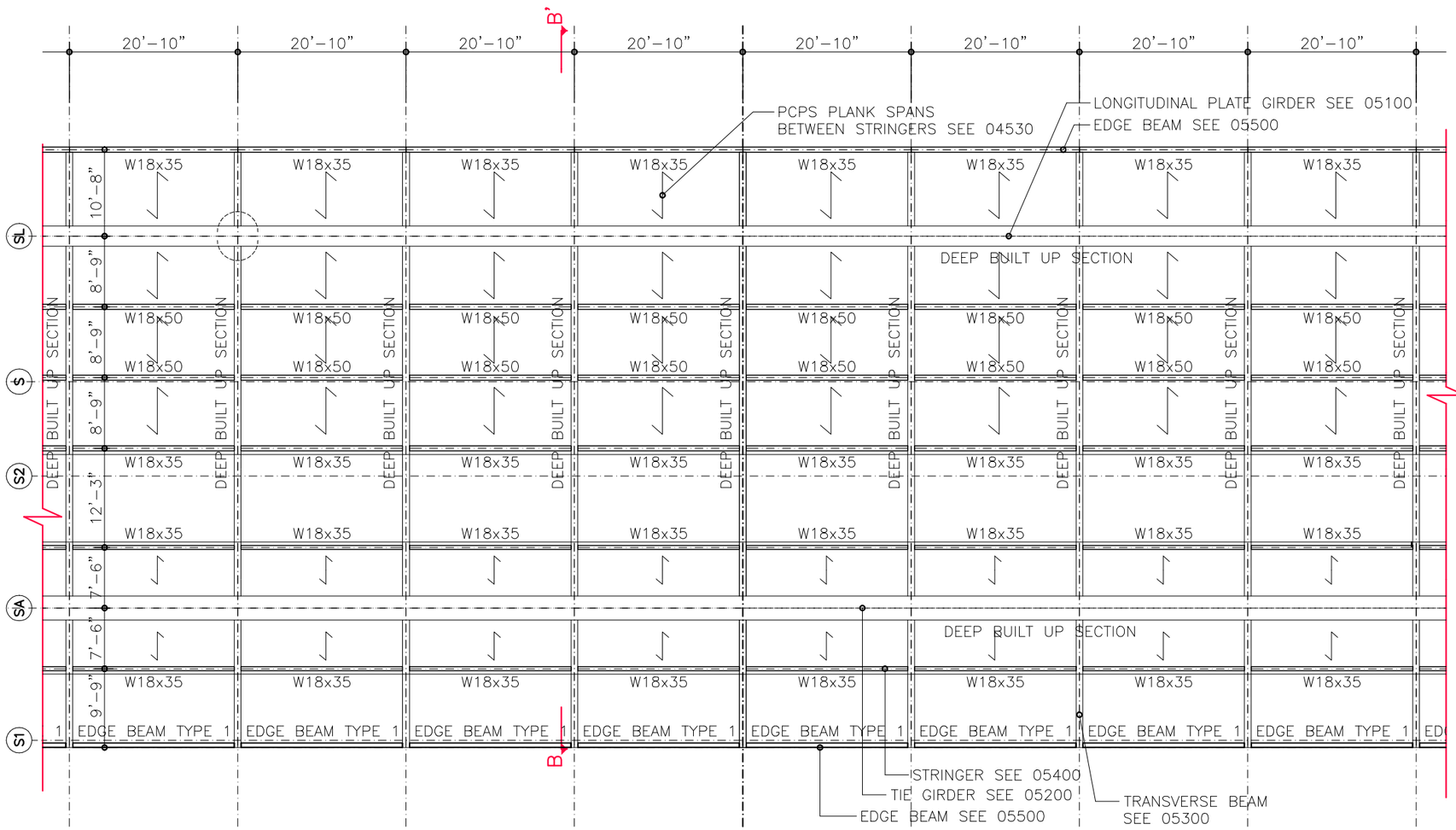

PLAN VIEW

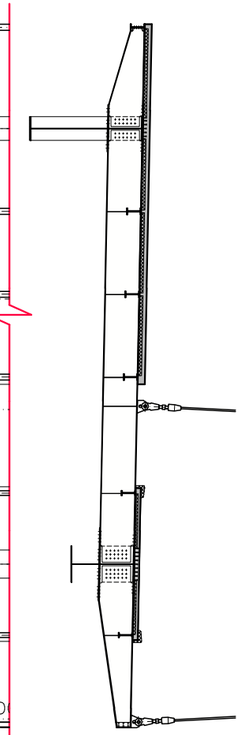

SECTION B-B'

FOR INFORMATION ONLY

IH30 FRONTAGE ROAD BRIDGES
DALLAS, TX, USA

50% ENGINEERING

EASTBOUND BRIDGE STEEL PLANS

(C) 2011 SANTIAGO CALATRAVA VALLS. ALL RIGHTS RESERVED.
ALL DRAWINGS ARE FOR DESIGN PURPOSES ONLY. NOT TO BE USED FOR BIDDING OR CONSTRUCTION.

CITY OF DALLAS

Texas Department of Transportation

SANTIAGO CALATRAVA
ARCHITECT & ENGINEER
PARKRING 11 - 8002 ZÜRICH, SUISSE
TEL: (+41) 44 204 5000 FAX: (+41) 44 204 5002

HUITT~ZOLLARS
Huitt-Zollars, Inc. Dallas
1717 McKinney Avenue, Suite 1400
Dallas, Texas 5202-1236

SCALE	TITLE
1/16" = 1'-0"	STEEL WORK FRAMING PLAN 4
DATE: October 2011	
DRAWN BY: ---- / CHECKED: --	DRAWING NO. EP-05008

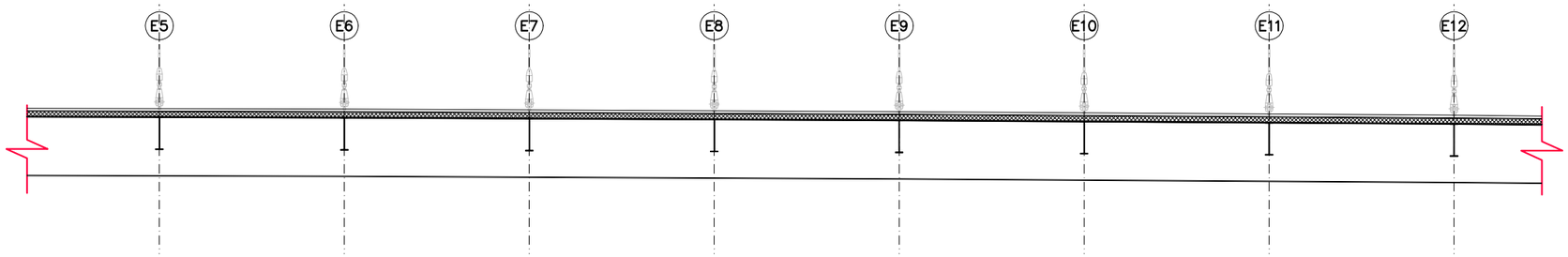

SECTION A-A' ON AXIS NA

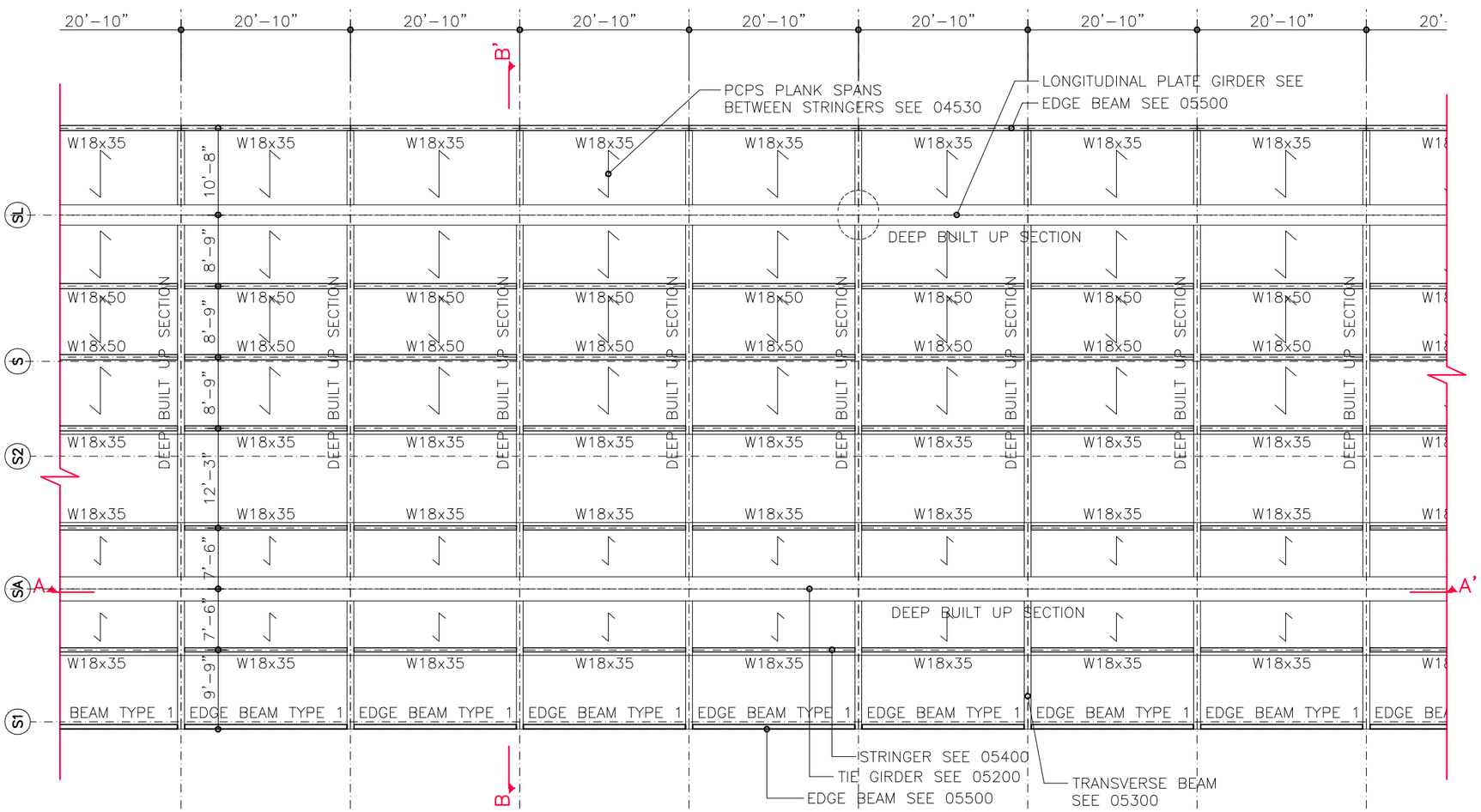

PLAN VIEW

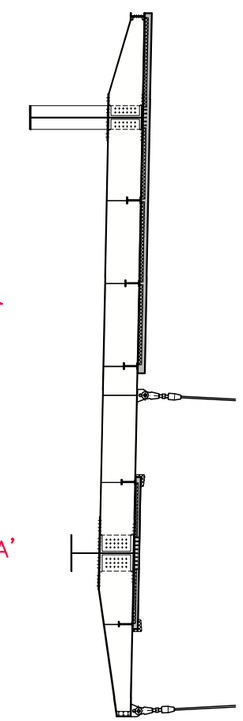

SECTION B-B'

REV.	DATE	TITLE

NOTES:
ALL COORDINATES ARE RELATIVE TO PROJECT REFERENCE POINT, SEE PLAN P-00006

FOR INFORMATION ONLY

IH30 FRONTAGE ROAD BRIDGES
DALLAS, TX, USA

50% ENGINEERING

EASTBOUND BRIDGE STEEL PLANS

(C) 2011 SANTIAGO CALATRAVA VALLS. ALL RIGHTS RESERVED.
ALL DRAWINGS ARE FOR DESIGN PURPOSES ONLY. NOT TO BE USED FOR BIDDING OR CONSTRUCTION.

CITY OF DALLAS

Texas Department of Transportation

SANTIAGO CALATRAVA
ARCHITECT & ENGINEER
PARKRING 11 - 8002 ZÜRICH, SUISSE
TEL: (+41) 44 204 5000 FAX: (+41) 44 204 5002

HUITT~ZOLLARS
Huitt-Zollars, Inc. Dallas
1717 McKinney Avenue, Suite 1400
Dallas, Texas 5202-1236

SCALE 1/16" = 1'-0"
DATE October 2011
DRAWN BY ----
CHECKED --
TITLE STEEL WORK FRAMING PLAN 5
DRAWING NO. EP-05009

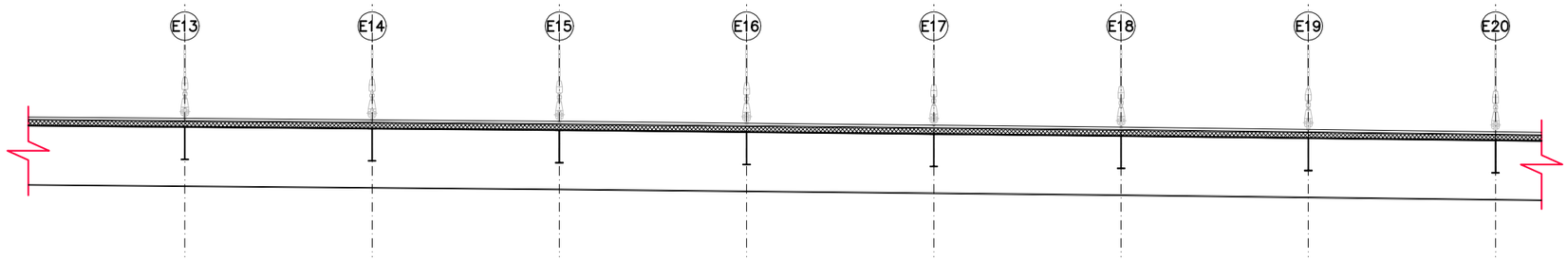

SECTION A-A' ON AXIS NA

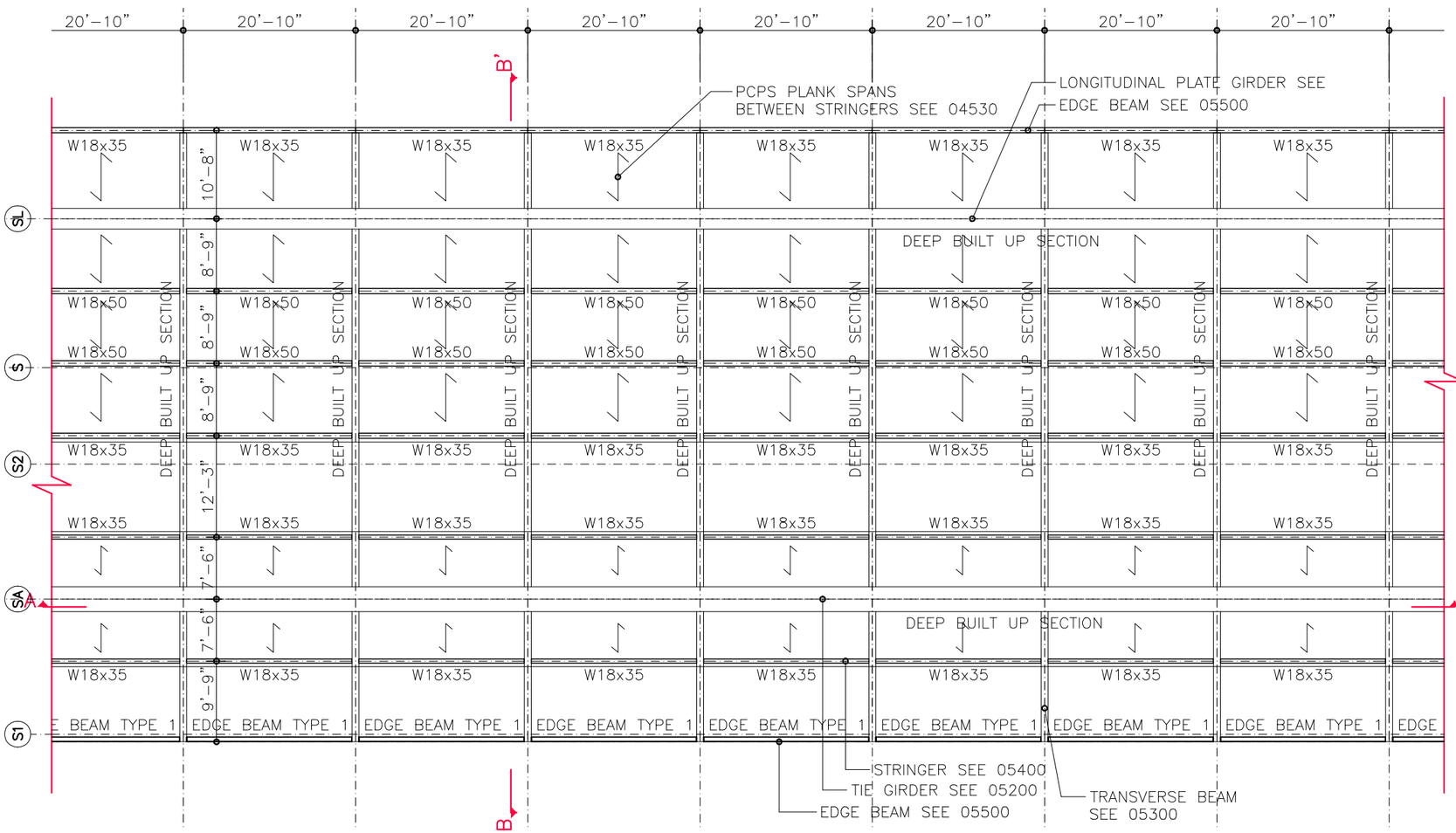

PLAN VIEW

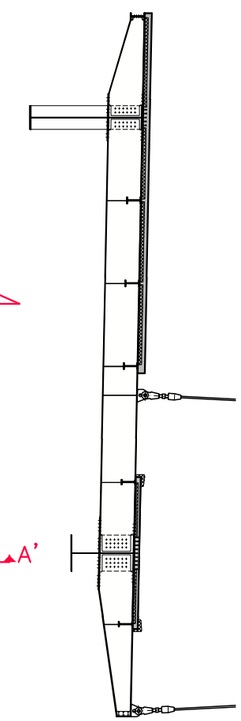

SECTION B-B'

REV.	DATE	TITLE

NOTES:
ALL COORDINATES ARE RELATIVE TO PROJECT REFERENCE POINT, SEE PLAN P-00006

FOR INFORMATION ONLY

IH30 FRONTAGE ROAD BRIDGES
DALLAS, TX, USA

50% ENGINEERING

EASTBOUND BRIDGE STEEL PLANS

(C) 2011 SANTIAGO CALATRAVA VALLS. ALL RIGHTS RESERVED.
ALL DRAWINGS ARE FOR DESIGN PURPOSES ONLY. NOT TO BE USED FOR BIDDING OR CONSTRUCTION.

CITY OF DALLAS

©2013 Texas Department of Transportation

SANTIAGO CALATRAVA
ARCHITECT & ENGINEER
PARKRING 11 - 8002 ZÜRICH, SUISSE
TEL: (+41) 44 204 5000 FAX: (+41) 44 204 5002

HUITT~ZOLLARS
Huitt-Zollars, Inc. Dallas
1717 McKinney Avenue, Suite 1400
Dallas, Texas 5202-1236

SCALE 1/16" = 1'-0"
DATE October 2011
DRAWN BY ----
CHECKED --
TITLE STEEL WORK FRAMING PLAN 6
DRAWING NO. EP-05010

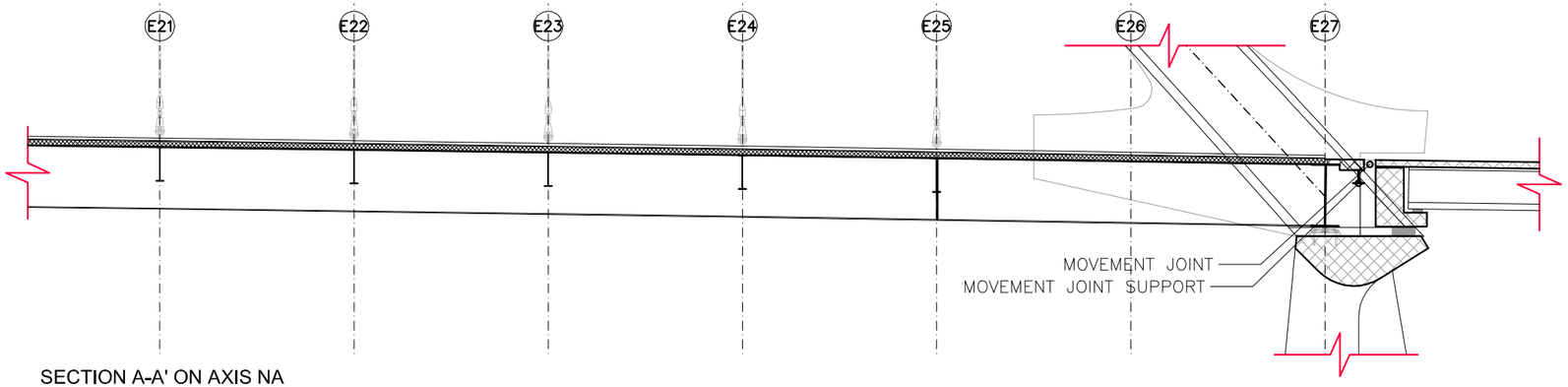

SECTION A-A' ON AXIS NA

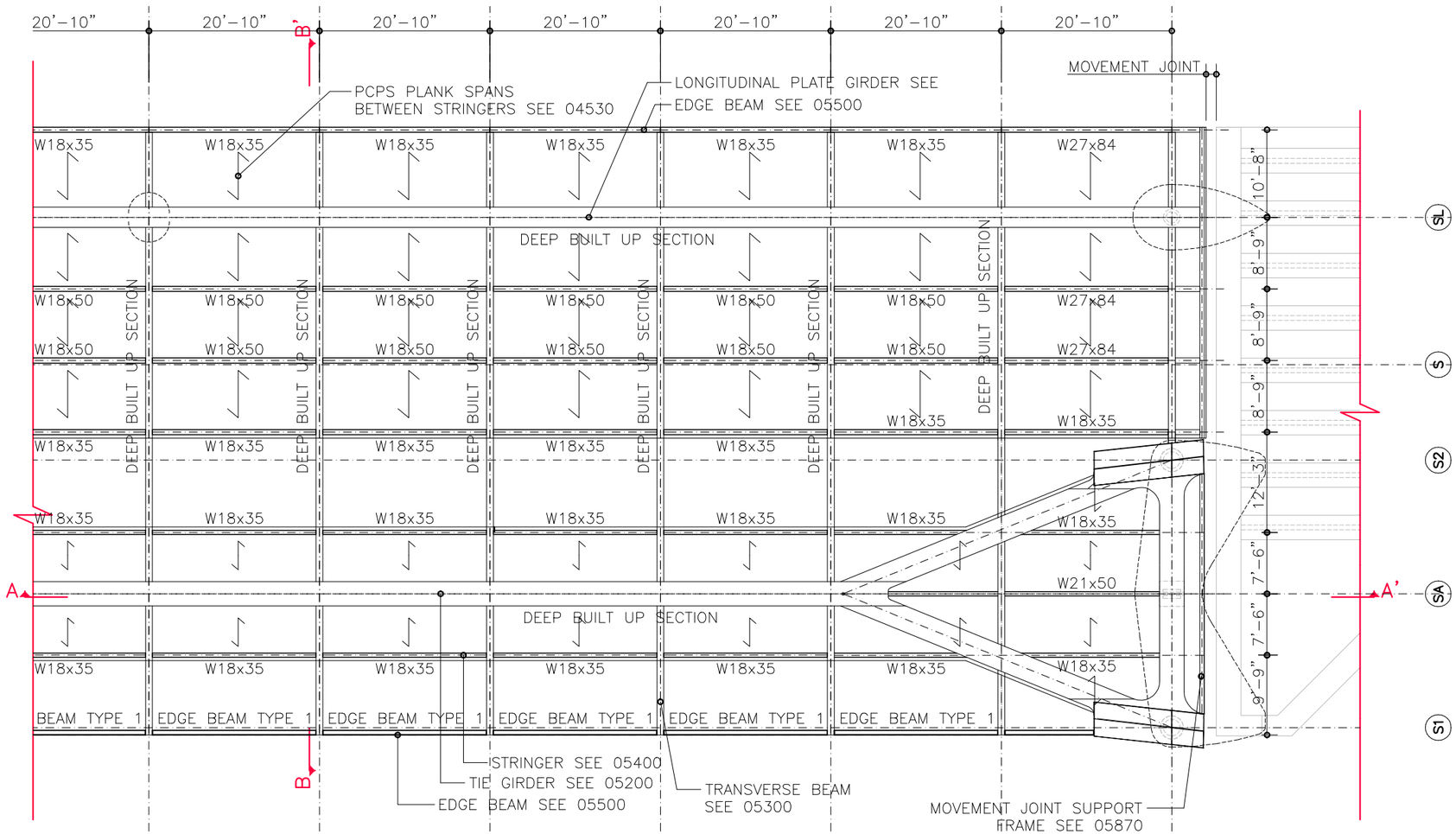

PLAN VIEW

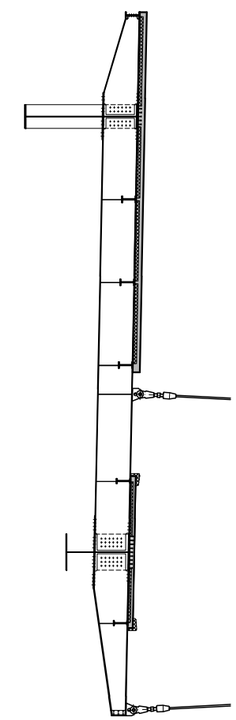

SECTION B-B'

REV.	DATE	TITLE

NOTES:
ALL COORDINATES ARE RELATIVE TO PROJECT REFERENCE POINT, SEE PLAN P-00006

FOR INFORMATION ONLY

IH30 FRONTAGE ROAD BRIDGES
DALLAS, TX, USA

50% ENGINEERING

EASTBOUND BRIDGE STEEL PLANS

(C) 2011 SANTIAGO CALATRAVA VALLS. ALL RIGHTS RESERVED.
ALL DRAWINGS ARE FOR DESIGN PURPOSES ONLY. NOT TO BE USED FOR BIDDING OR CONSTRUCTION.

CITY OF DALLAS

Texas Department of Transportation

SANTIAGO CALATRAVA
ARCHITECT & ENGINEER
PARKRING 11 - 8002 ZÜRICH, SUISSE
TEL: (+41) 44 204 5000 FAX: (+41) 44 204 5002

HUITT~ZOLLARS
Huitt-Zollars, Inc. Dallas
1717 McKinney Avenue, Suite 1400
Dallas, Texas 5202-1236

SCALE	TITLE
1/16" = 1'-0"	STEEL WORK FRAMING PLAN 7
DATE: October 2011	
DRAWN BY: ---- / CHECKED: --	DRAWING NO. EP-05011

REV.	DATE	TITLE

NOTES:
ALL COORDINATES ARE RELATIVE TO PROJECT REFERENCE POINT, SEE PLAN P-00006

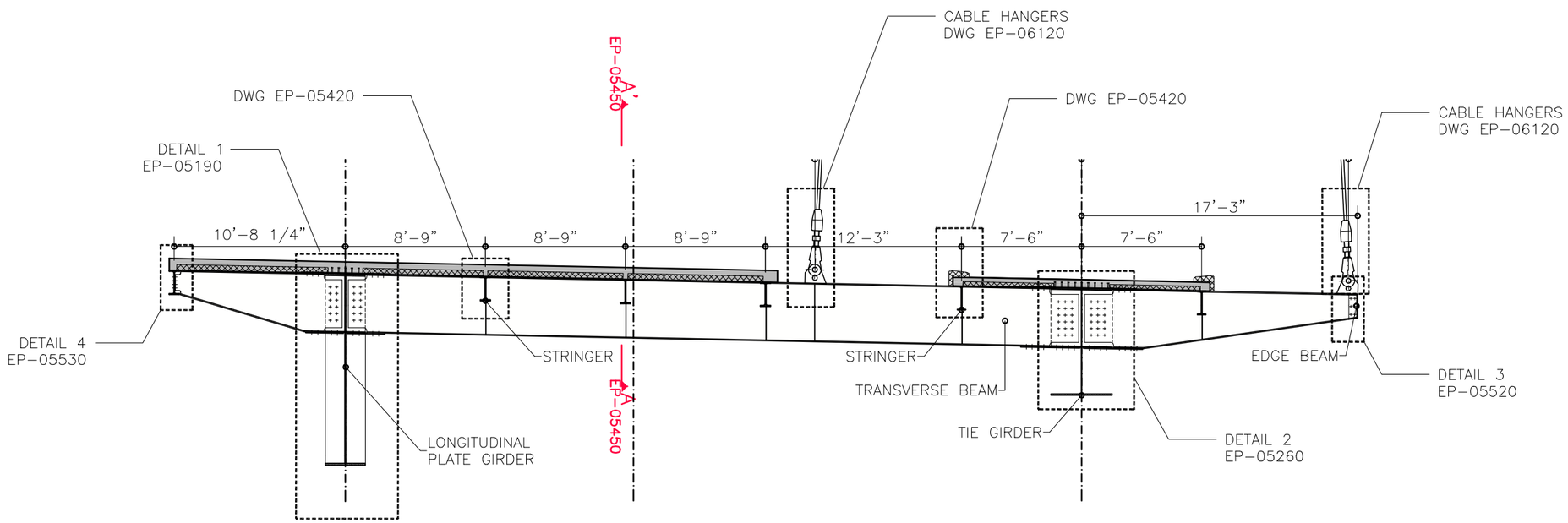

FOR INFORMATION ONLY

TYPICAL CROSS SECTION

IH30 FRONTAGE ROAD BRIDGES
DALLAS, TX, USA

50% ENGINEERING

EASTBOUND BRIDGE STEEL PLANS

(C) 2011 SANTIAGO CALATRAVA VALLS. ALL RIGHTS RESERVED.
ALL DRAWINGS ARE FOR DESIGN PURPOSES ONLY. NOT TO BE USED FOR BIDDING OR CONSTRUCTION.

CITY OF DALLAS

©2011 Texas Department of Transportation

SANTIAGO CALATRAVA
ARCHITECT & ENGINEER
PARKRING 11 - 8002 ZÜRICH, SUISSE
TEL: (+41) 44 204 5000 FAX: (+41) 44 204 5002

HUITT~ZOLLARS
Huitt-Zollars, Inc. Dallas
1717 McKinney Avenue, Suite 1400
Dallas, Texas 5202-1236

SCALE	TITLE
1/8" = 1'-0"	STEELWORK TYPICAL CROSS SECTION
DATE October 2011	
DRAWN BY ---- / CHECKED --	DRAWING NO. EP-05020

REV.	DATE	TITLE

NOTES:
ALL COORDINATES ARE RELATIVE TO PROJECT REFERENCE POINT, SEE PLAN P-00006

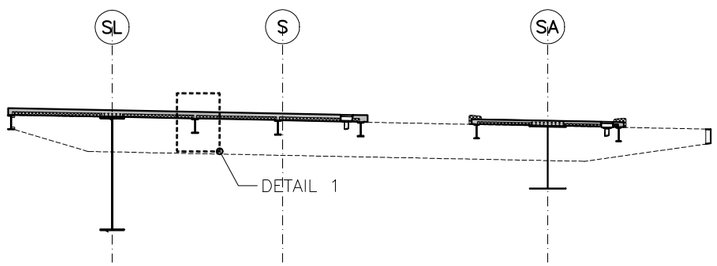

STEEL WORK TYPICAL CROSS SECTION
1/16" = 1'-0"

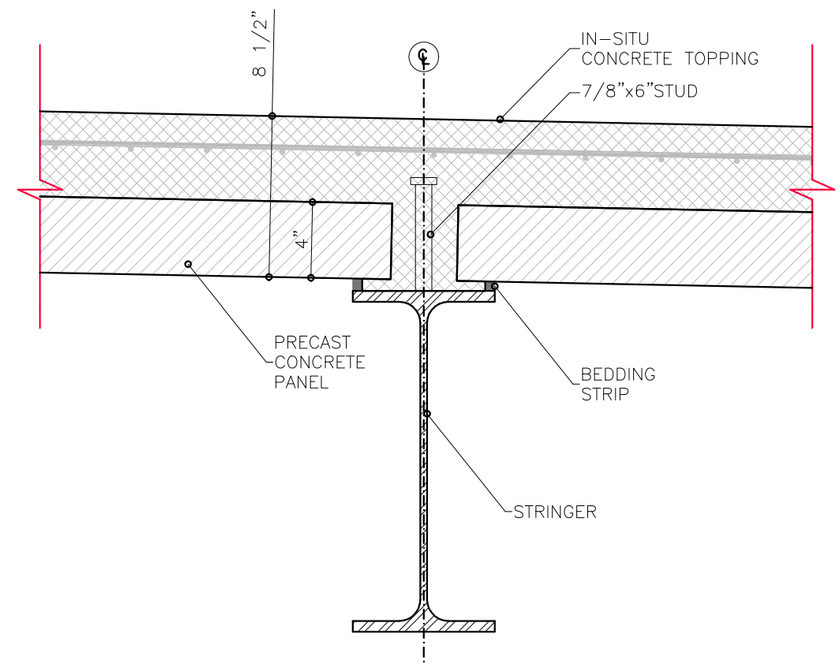

DETAIL 1

FOR INFORMATION ONLY

IH30 FRONTAGE ROAD BRIDGES
STEEL PLANS

50% ENGINEERING

(C) 2011 SANTIAGO CALATRAVA VALLS. ALL RIGHTS RESERVED.
ALL DRAWINGS ARE FOR DESIGN PURPOSES ONLY. NOT TO BE USED FOR BIDDING OR CONSTRUCTION.

CITY OF DALLAS

©2011 Texas Department of Transportation

SANTIAGO CALATRAVA
ARCHITECT & ENGINEER
PARKRING 11 - 8002 ZÜRICH, SUISSE
TEL: (+41) 44 204 5000 FAX: (+41) 44 204 5002

HUITT~ZOLLARS
Huitt-Zollars, Inc. Dallas
1717 McKinney Avenue, Suite 1400
Dallas, Texas 5202-1236

SCALE	TITLE
1 1/2" = 1'-0"	STRINGER TYPE 1 (DECK SUPPORT) DETAIL
DATE: October 2011	----

DRAWN BY	CHECKED	DRAWING NO.
----	--	EP-05420

REV.	DATE	TITLE

NOTES:
ALL COORDINATES ARE RELATIVE TO PROJECT REFERENCE POINT, SEE PLAN P-00006

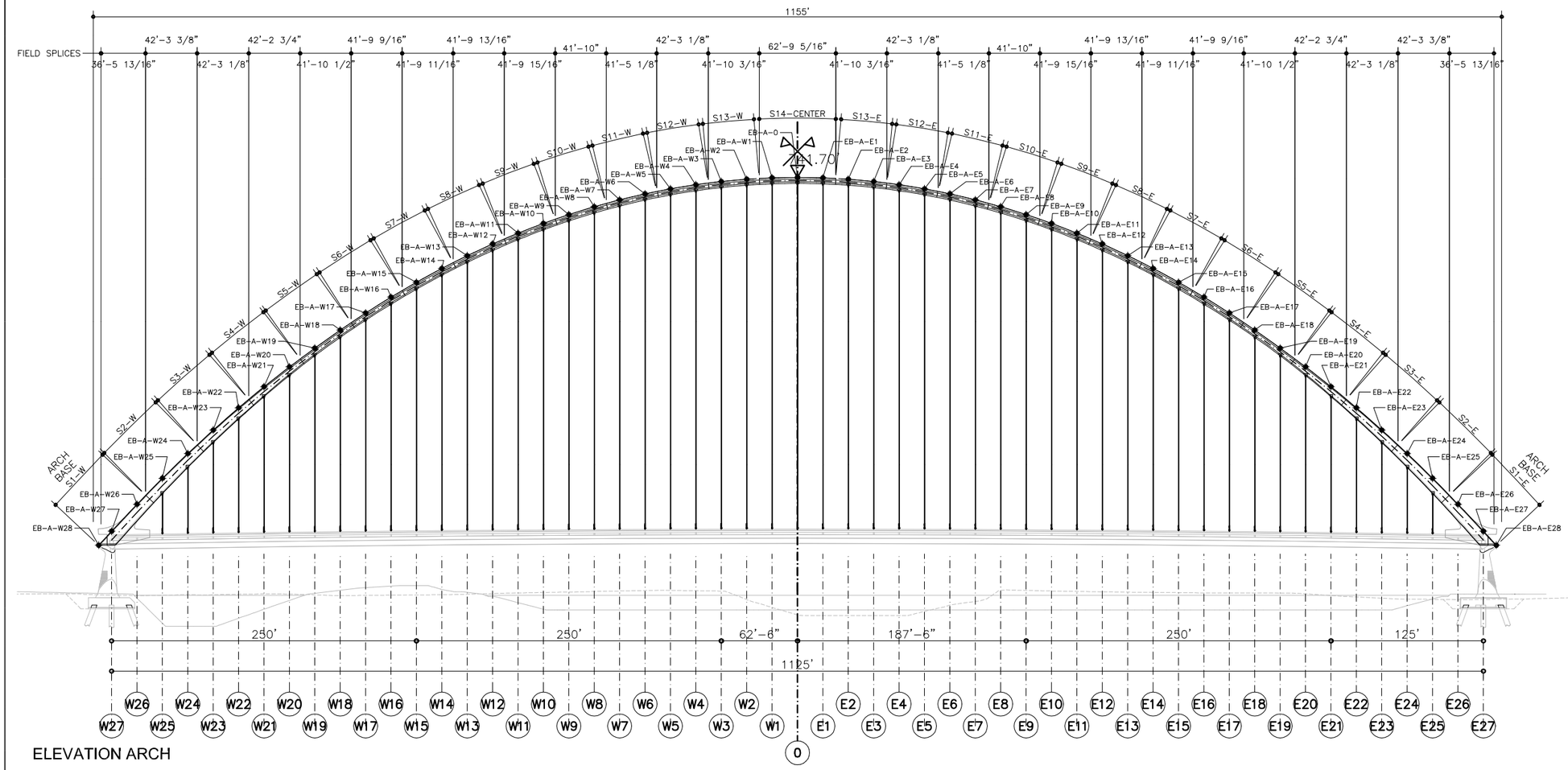

ELEVATION ARCH

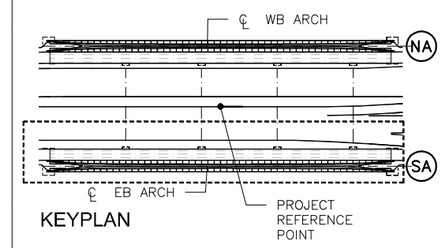

KEYPLAN

FOR INFORMATION ONLY

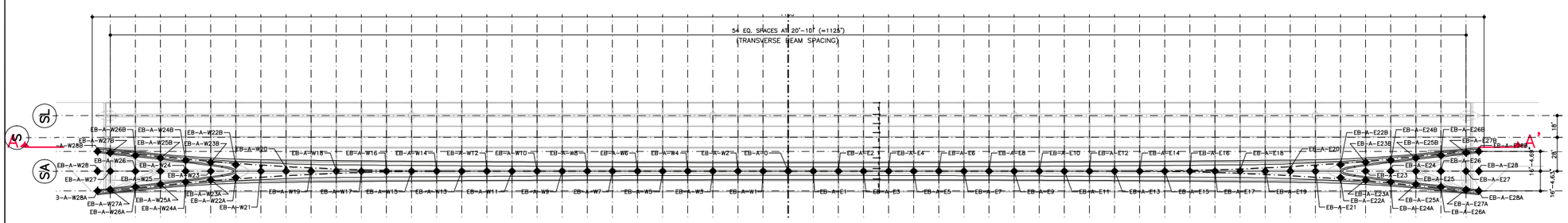

PLAN ARCH

IH30 FRONTAGE ROAD BRIDGES
STEEL PLANS

50% ENGINEERING

(C) 2011 SANTIAGO CALATRAVA VALLS. ALL RIGHTS RESERVED.
ALL DRAWINGS ARE FOR DESIGN PURPOSES ONLY. NOT TO BE USED FOR BIDDING OR CONSTRUCTION.

CITY OF DALLAS

Texas Department of Transportation

SANTIAGO CALATRAVA
ARCHITECT & ENGINEER
PARKRING 11 - 8002 ZÜRICH, SUISSE
TEL: (+41) 44 204 5000 FAX: (+41) 44 204 5002

HUITT~ZOLLARS
Huitt-Zollars, Inc. Dallas
1717 McKinney Avenue, Suite 1400
Dallas, Texas 5202-1236

SCALE	TITLE
----	ARCH OVERVIEW PLAN
DATE October 2011	----
DRAWN BY ---- / CHECKED --	DRAWING NO. EP-05701

REV.	DATE	TITLE

NOTES:
ALL COORDINATES ARE RELATIVE TO PROJECT REFERENCE POINT, SEE PLAN P-00006

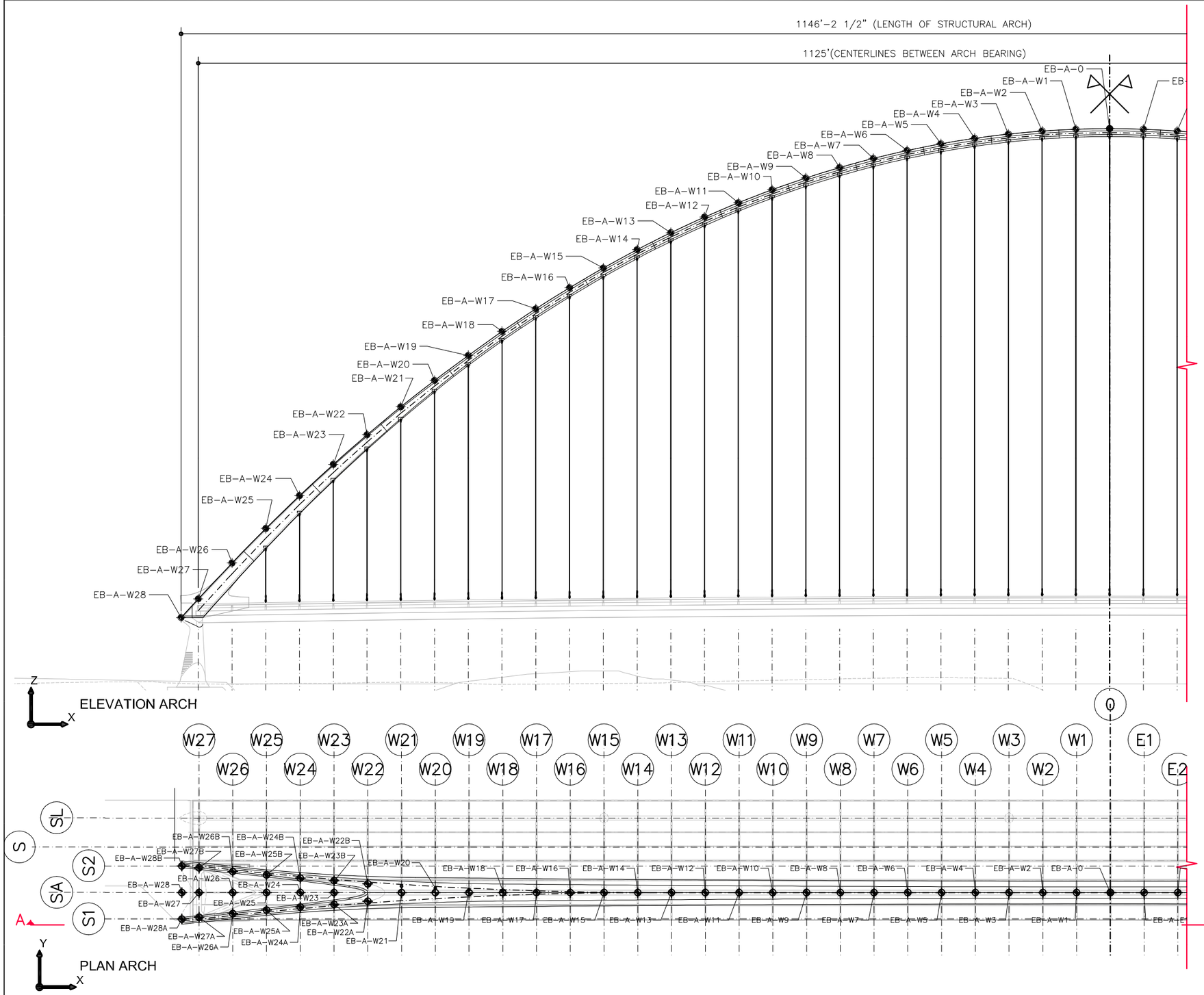

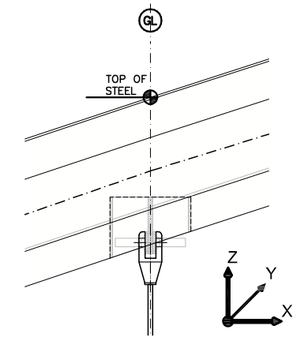

GEOMETRY POINTS TOP OF ARCH			
POINT	Position X	Position Y	Position Z
EB-A-0	0.00	-2376.00	4100.41
EB-A-W01	-250.00	-2376.00	4095.94
EB-A-W02	-500.00	-2376.00	4082.49
EB-A-W03	-750.00	-2376.00	4060.07
EB-A-W04	-1000.00	-2376.00	4028.66
EB-A-W05	-1250.00	-2376.00	3988.17
EB-A-W06	-1500.00	-2376.00	3938.61
EB-A-W07	-1750.00	-2376.00	3879.89
EB-A-W08	-2000.00	-2376.00	3811.91
EB-A-W09	-2250.00	-2376.00	3734.60
EB-A-W10	-2500.00	-2376.00	3647.88
EB-A-W11	-2750.00	-2376.00	3551.60
EB-A-W12	-3000.00	-2376.00	3445.67
EB-A-W13	-3250.00	-2376.00	3329.94
EB-A-W14	-3500.00	-2376.00	3204.25
EB-A-W15	-3750.00	-2376.00	3068.45
EB-A-W16	-4000.00	-2376.00	2922.34
EB-A-W17	-4250.00	-2376.00	2765.76
EB-A-W18	-4500.00	-2376.00	2598.52
EB-A-W19	-4750.00	-2376.00	2420.23
EB-A-W19	-4750.00	-2376.00	2420.23
EB-A-W20	-5000.00	-2376.00	2235.74
EB-A-W20	-5000.00	-2376.00	2235.74
EB-A-W21	-5250.00	-2376.00	2040.33
EB-A-W22	-5500.00	-2376.00	1833.51
EB-A-W23	-5750.00	-2376.00	1615.04
EB-A-W23A	-5750.00	-2442.27	1613.71
EB-A-W23B	-5750.00	-2309.73	1613.71
EB-A-W24	-6000.00	-2376.00	1384.53
EB-A-W24A	-6000.00	-2474.44	1382.56
EB-A-W24B	-6000.00	-2277.56	1382.56
EB-A-W25	-6250.00	-2376.00	1142.23
EB-A-W25A	-6250.00	-2504.33	1139.66
EB-A-W25B	-6250.00	-2247.67	1139.66
EB-A-W26	-6500.00	-2376.00	886.91
EB-A-W26A	-6500.00	-2531.99	883.79
EB-A-W26B	-6500.00	-2220.01	883.79
EB-A-W27	-6750.00	-2376.00	622.12
EB-A-W27A	-6750.00	-2558.92	618.46
EB-A-W27B	-6750.00	-2193.08	618.46
EB-A-W28	-6880.85	-2376.00	480.00
EB-A-W28A	-6877.24	-2572.64	480.00
EB-A-W28B	-6877.24	-2179.36	480.00

FOR INFORMATION ONLY

IH30 FRONTAGE ROAD BRIDGES
DALLAS, TX, USA

50% ENGINEERING

EASTBOUND BRIDGE STEEL PLANS

(C) 2011 SANTIAGO CALATRAVA VALLS. ALL RIGHTS RESERVED.
ALL DRAWINGS ARE FOR DESIGN PURPOSES ONLY. NOT TO BE USED FOR BIDDING OR CONSTRUCTION.

CITY OF DALLAS

Texas Department of Transportation

SANTIAGO CALATRAVA
ARCHITECT & ENGINEER
PARKRING 11 - 8002 ZÜRICH, SUISSE
TEL: (+41) 44 204 5000 FAX: (+41) 44 204 5002

HUITT~ZOLLARS
Huitt-Zollars, Inc. Dallas
1717 McKinney Avenue, Suite 1400
Dallas, Texas 5202-1236

1/64"=1'-0

October 2011

ARCH GEOMETRY 1

EP-05702

REV.	DATE	TITLE

NOTES:
ALL COORDINATES ARE RELATIVE TO PROJECT REFERENCE POINT, SEE PLAN P-00006

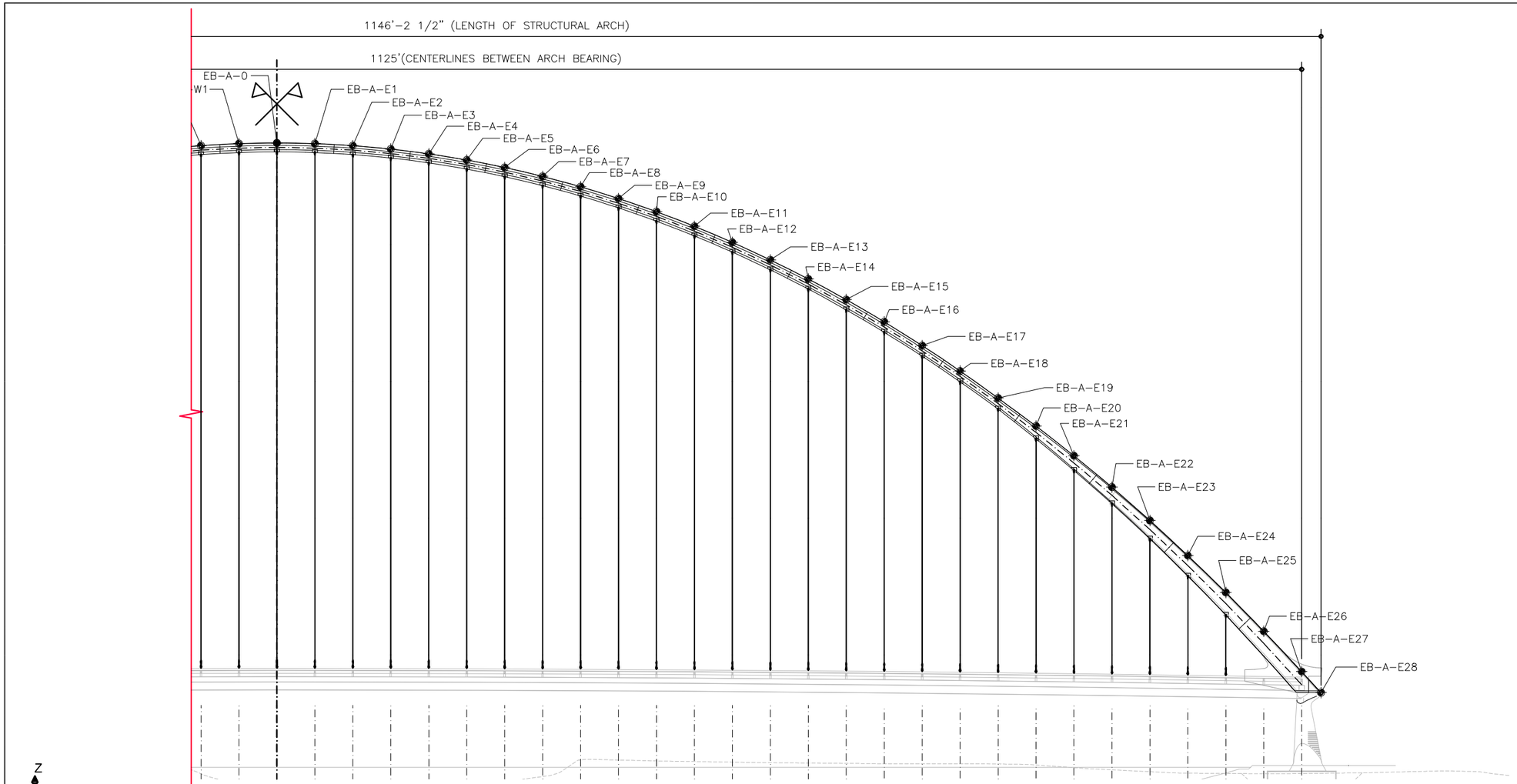

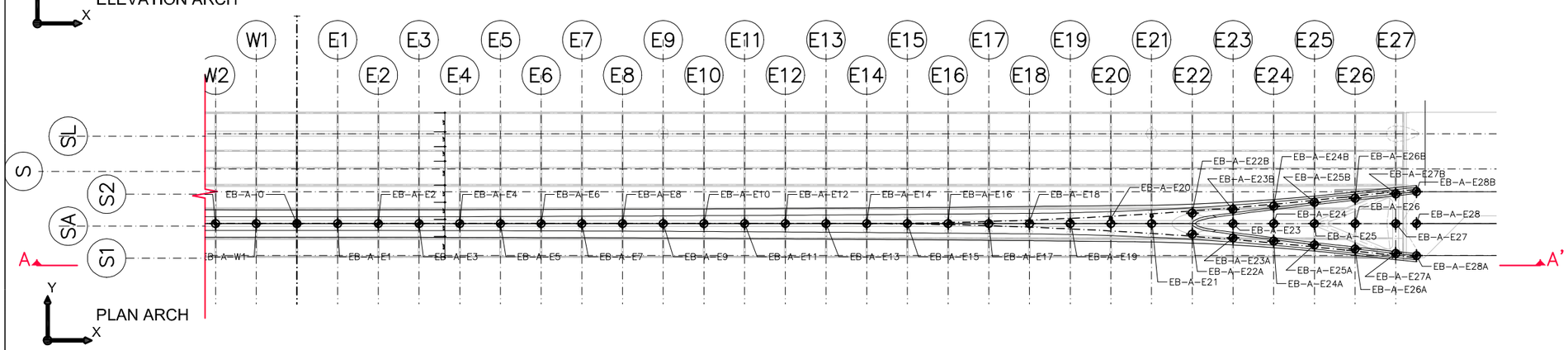

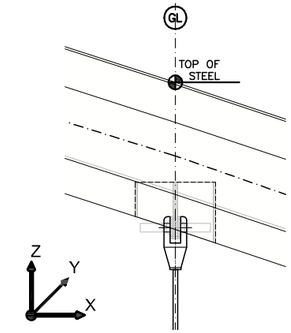

GEOMETRY POINTS TOP OF ARCH			
POINT	Position X	Position Y	Position Z
EB-A-0	0.00	-2376.00	4100.41
EB-A-E01	250.00	-2376.00	4095.94
EB-A-E02	500.00	-2376.00	4082.49
EB-A-E03	750.00	-2376.00	4060.07
EB-A-E04	1000.00	-2376.00	4028.66
EB-A-E05	1250.00	-2376.00	3988.17
EB-A-E06	1500.00	-2376.00	3938.61
EB-A-E07	1750.00	-2376.00	3879.89
EB-A-E08	2000.00	-2376.00	3811.91
EB-A-E09	2250.00	-2376.00	3734.60
EB-A-E10	2500.00	-2376.00	3647.88
EB-A-E11	2750.00	-2376.00	3551.60
EB-A-E12	3000.00	-2376.00	3445.67
EB-A-E13	3250.00	-2376.00	3329.94
EB-A-E14	3500.00	-2376.00	3204.25
EB-A-E15	3750.00	-2376.00	3068.45
EB-A-E16	4000.00	-2376.00	2922.34
EB-A-E17	4250.00	-2376.00	2765.76
EB-A-E18	4500.00	-2376.00	2598.52
EB-A-E21	5250.00	-2376.00	2040.33
EB-A-E22	5500.00	-2376.00	1833.51
EB-A-E23	5750.00	-2376.00	1615.04
EB-A-E23A	5750.00	-2442.27	1613.71
EB-A-E23B	5750.00	-2309.73	1613.71
EB-A-E24	6000.00	-2376.00	1384.53
EB-A-E24A	6000.00	-2474.44	1382.56
EB-A-E24B	6001.30	-2277.40	1381.32
EB-A-E25	6250.00	-2376.00	1142.23
EB-A-E25A	6250.00	-2504.33	1139.66
EB-A-E25B	6250.00	-2247.67	1139.66
EB-A-E26	6500.00	-2376.00	886.91
EB-A-E26A	6500.00	-2531.99	883.79
EB-A-E26B	6500.00	-2220.01	883.79
EB-A-E27	6750.00	-2376.00	622.12
EB-A-E27A	6750.00	-2558.92	618.46
EB-A-E27B	6750.00	-2193.08	618.46
EB-A-E28	6880.85	-2376.00	480.00
EB-A-E28A	6877.24	-2572.64	480.00
EB-A-E28B	6877.24	-2179.36	480.00

FOR INFORMATION ONLY

IH30 FRONTAGE ROAD BRIDGES
DALLAS, TX, USA

50% ENGINEERING

EASTBOUND BRIDGE STEEL PLANS

(C) 2011 SANTIAGO CALATRAVA VALLS. ALL RIGHTS RESERVED.
ALL DRAWINGS ARE FOR DESIGN PURPOSES ONLY. NOT TO BE USED FOR BIDDING OR CONSTRUCTION.

CITY OF DALLAS

Texas Department of Transportation

SANTIAGO CALATRAVA
ARCHITECT & ENGINEER
PARKRING 11 - 8002 ZÜRICH, SUISSE
TEL: (+41) 44 204 5000 FAX: (+41) 44 204 5002

HUITT~ZOLLARS
Huitt-Zollars, Inc. Dallas
1717 McKinney Avenue, Suite 1400
Dallas, Texas 5202-1236

October 2011

ARCH GEOMETRY 2

EP-05703

REV.	DATE	TITLE

NOTES:
ALL COORDINATES ARE RELATIVE TO PROJECT REFERENCE POINT, SEE PLAN P-00006

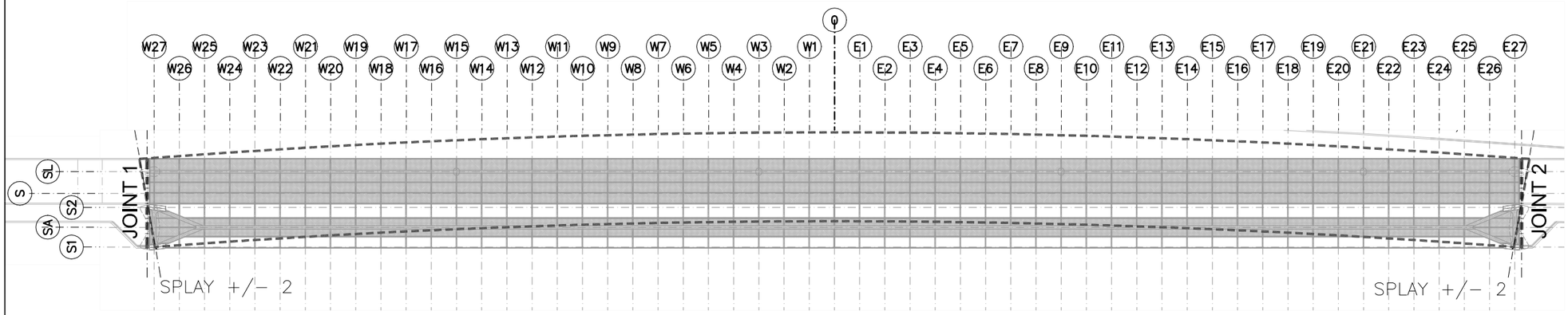

EAST BOUND - MOVEMENT JOINTS OVERVIEW PLAN

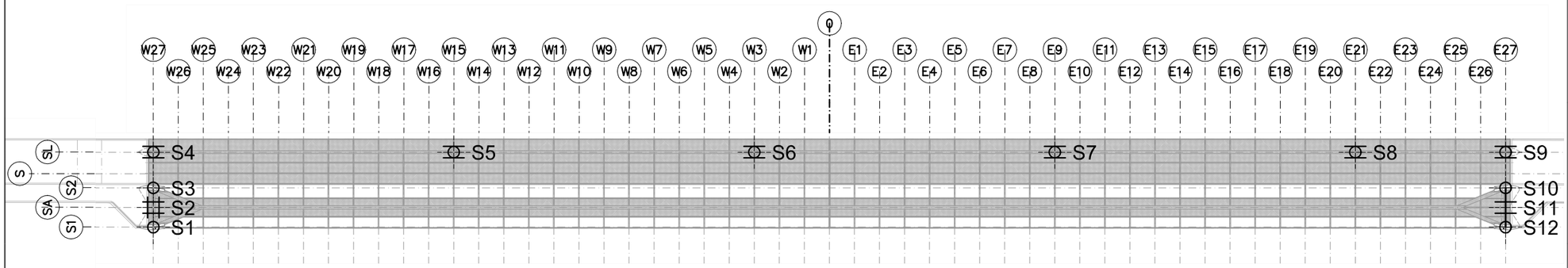

EAST BOUND - BEARING OVERVIEW PLAN

FOR INFORMATION ONLY

MOVEMENT JOINTS			
JOINT 1	LOW	NORMAL	HIGH
TEMPERATURE	0º	70º	120º
MOVEMENT RANGES	0"	0"	0"
TOTAL RANGE	0"		
SPLAY	+/- 2"		
JOINT 2	LOW	NORMAL	HIGH
TEMPERATURE	0º	70º	120º
MOVEMENT RANGES	-5"	0"	+3 1/2"
TOTAL RANGE	8 1/2"		
SPLAY	+/- 2"		

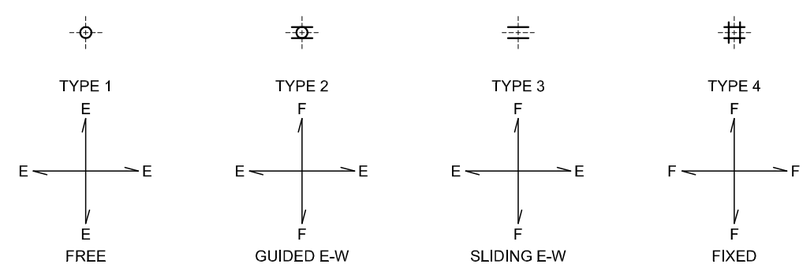

TYPE 1	TYPE 2	TYPE 3	TYPE 4
BEARING S1	BEARING S4	BEARING S11	BEARING S2
BEARING S3	BEARING S5		
BEARING S10	BEARING S6		
BEARING S12	BEARING S7		
	BEARING S8		
	BEARING S9		

IH30 FRONTAGE ROAD BRIDGES
DALLAS, TX, USA

50% ENGINEERING

EASTBOUND BRIDGE STEEL PLANS

(C) 2011 SANTIAGO CALATRAVA VALLS. ALL RIGHTS RESERVED.
ALL DRAWINGS ARE FOR DESIGN PURPOSES ONLY. NOT TO BE USED FOR BIDDING OR CONSTRUCTION.

CITY OF DALLAS

©2013 Texas Department of Transportation

SANTIAGO CALATRAVA
ARCHITECT & ENGINEER
PARKRING 11 - 8002 ZÜRICH, SUISSE
TEL: (+41) 44 204 5000 FAX: (+41) 44 204 5002

HUITT~ZOLLARS
Huitt-Zollars, Inc. Dallas
1717 McKinney Avenue, Suite 1400
Dallas, Texas 5202-1236

SCALE ----
DATE October 2011
DRAWN BY ----
CHECKED --
TITLE OVERVIEW BEARINGS AND MOVEMENT JOINTS
DRAWING NO. EP-05800

REV.	DATE	TITLE

NOTES:
ALL COORDINATES ARE RELATIVE TO PROJECT REFERENCE POINT, SEE PLAN P-00006

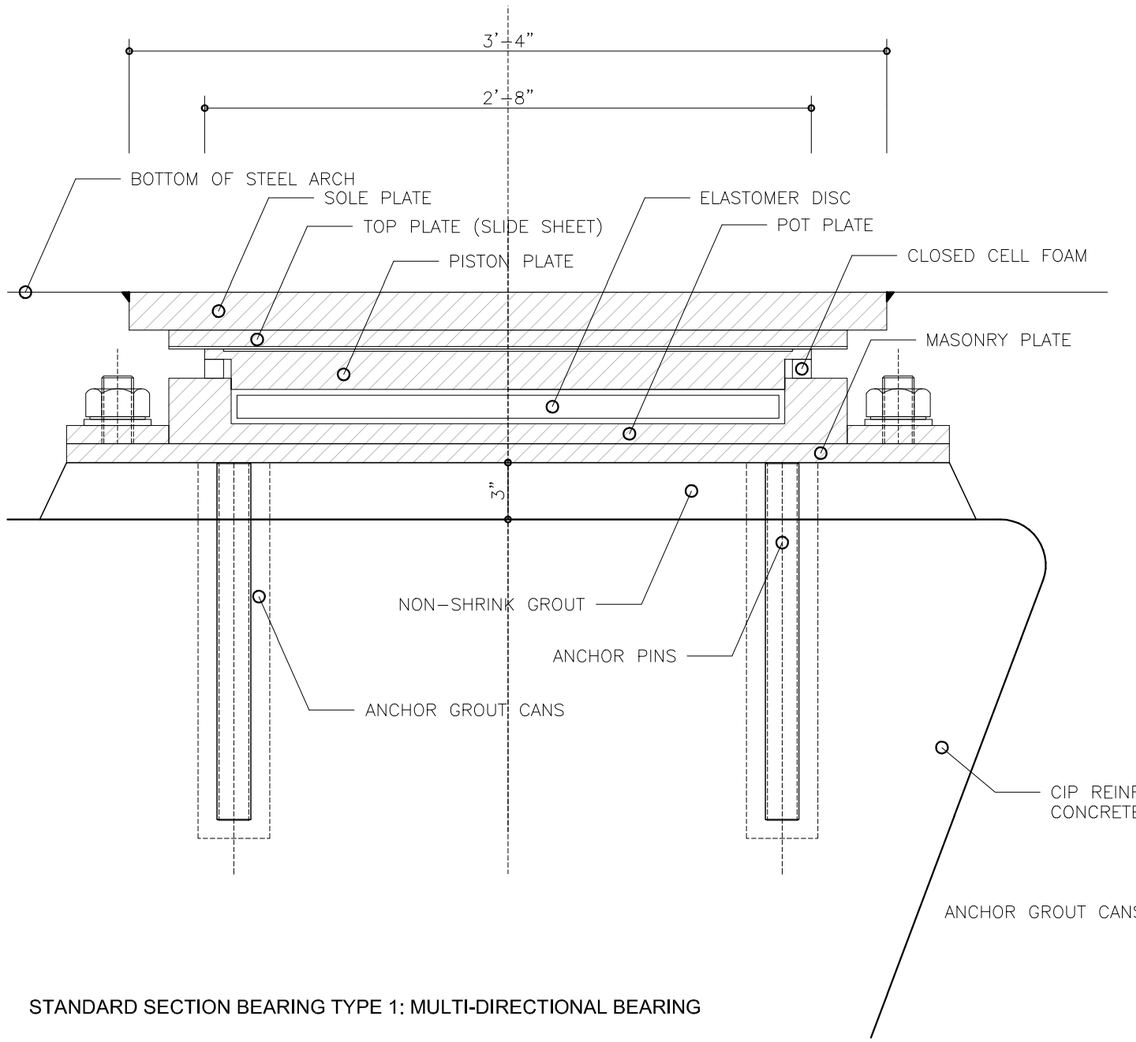

STANDARD SECTION BEARING TYPE 1: MULTI-DIRECTIONAL BEARING

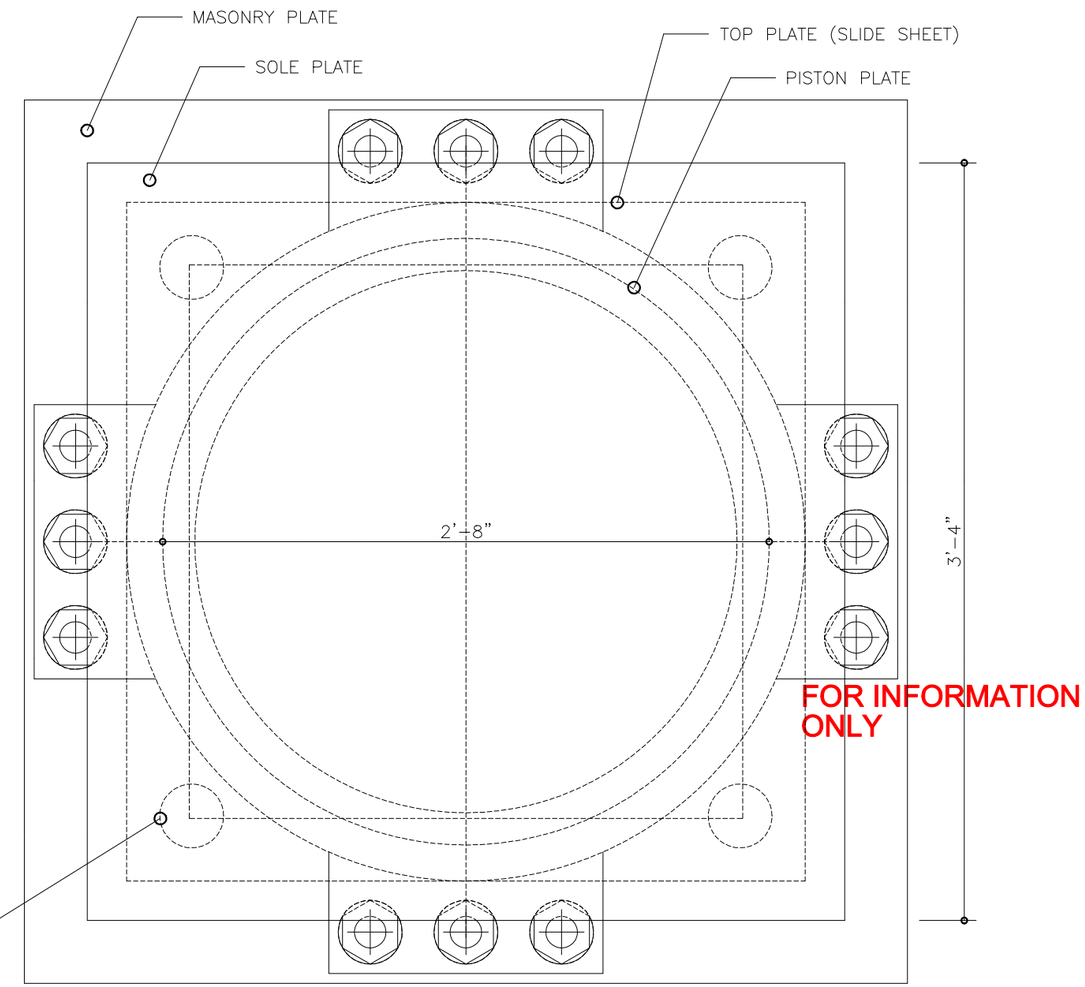

STANDARD PLAN BEARING TYPE 1: MULTI-DIRECTIONAL BEARING

IH30 FRONTAGE ROAD BRIDGES
DALLAS, TX, USA

50% ENGINEERING

EASTBOUND BRIDGE STEEL PLANS

(C) 2011 SANTIAGO CALATRAVA VALLS. ALL RIGHTS RESERVED.
ALL DRAWINGS ARE FOR DESIGN PURPOSES ONLY. NOT TO BE USED FOR BIDDING OR CONSTRUCTION.

CITY OF DALLAS

©2011 Texas Department of Transportation

SANTIAGO CALATRAVA
ARCHITECT & ENGINEER
PARKRING 11 – 8002 ZÜRICH, SUISSE
TEL: (+41) 44 204 5000 FAX: (+41) 44 204 5002

HUITT~ZOLLARS
Huitt-Zollars, Inc. Dallas
1717 McKinney Avenue, Suite 1400
Dallas, Texas 5202-1236

1 1/2"=1'-0"

October 2011

BEARING ASSEMBLY TYPE 1
MULTI DIRECTIONAL BEARING

EP-05810

REV.	DATE	TITLE

NOTES:
ALL COORDINATES ARE RELATIVE TO PROJECT REFERENCE POINT, SEE PLAN P-00006

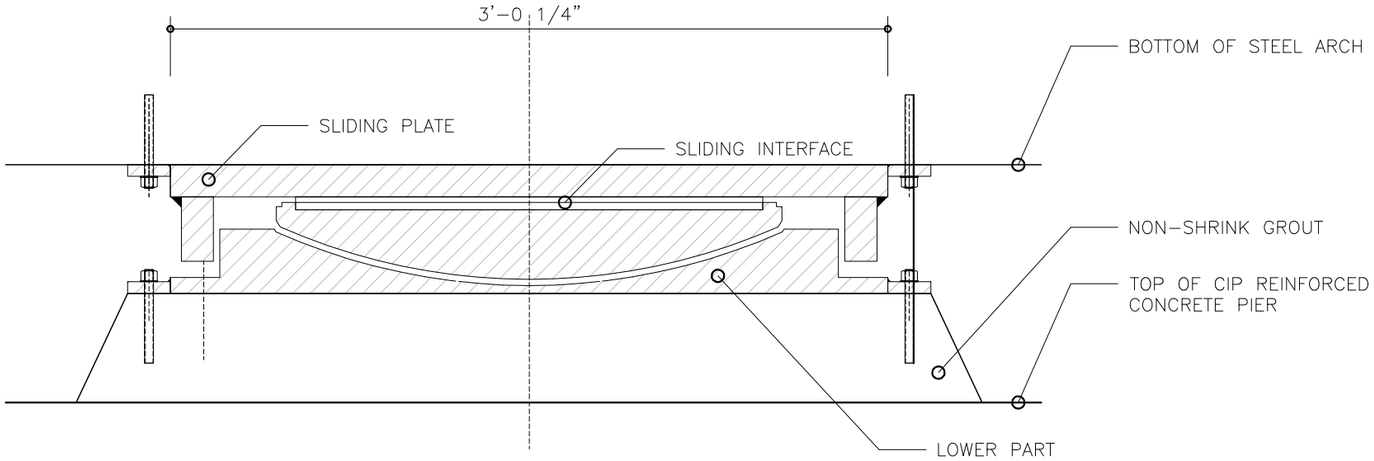

STANDARD SECTION BEARING TYPE 2: SPHERICAL BEARING

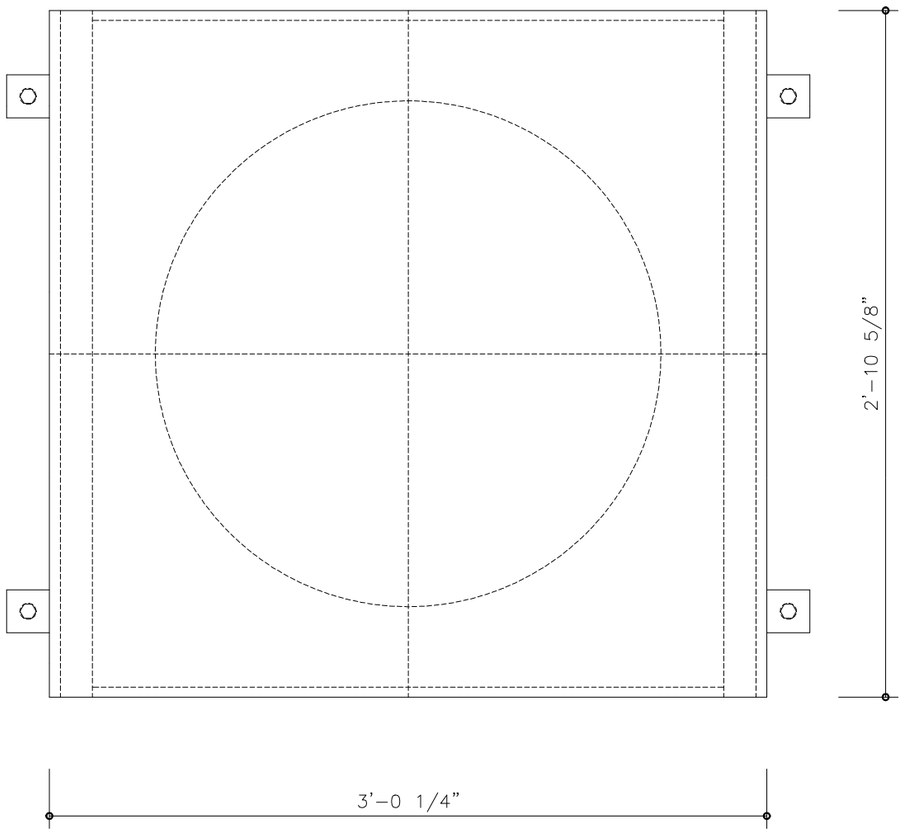

STANDARD SLIDING PLATE BEARING TYPE 2: SPHERICAL BEARING

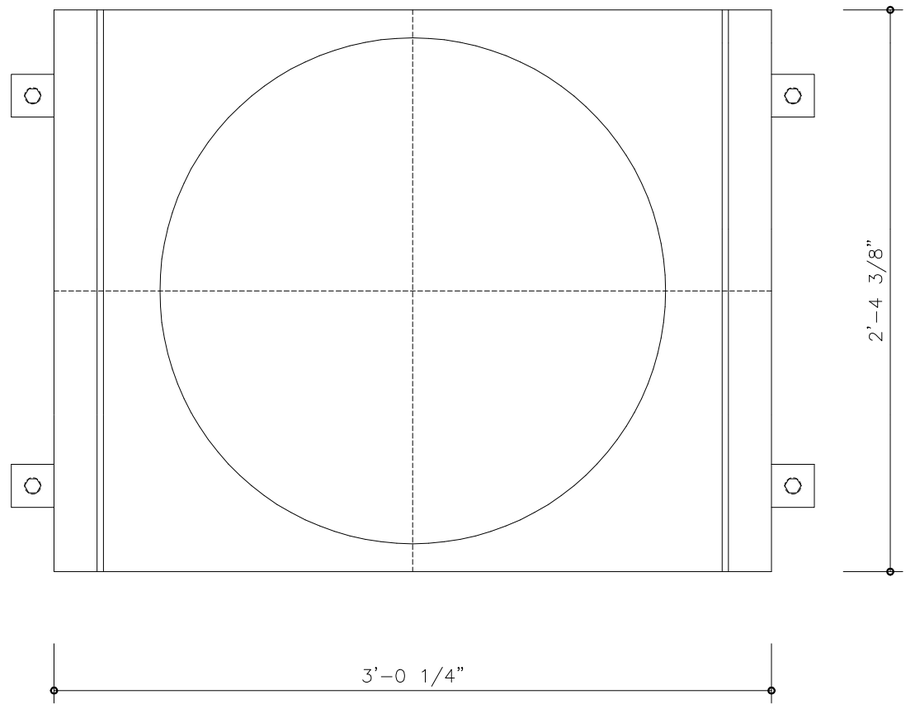

STANDARD LOWER PART BEARING TYPE 2: SPHERICAL BEARING

FOR INFORMATION ONLY

IH30 FRONTAGE ROAD BRIDGES
DALLAS, TX, USA

50% ENGINEERING

EASTBOUND BRIDGE STEEL PLANS

(C) 2011 SANTIAGO CALATRAVA VALLS. ALL RIGHTS RESERVED.
ALL DRAWINGS ARE FOR DESIGN PURPOSES ONLY. NOT TO BE USED FOR BIDDING OR CONSTRUCTION.

CITY OF DALLAS

©2011 Texas Department of Transportation

SANTIAGO CALATRAVA
ARCHITECT & ENGINEER
PARKRING 11 - 8002 ZÜRICH, SUISSE
TEL: (+41) 44 204 5000 FAX: (+41) 44 204 5002

HUITT~ZOLLARS
Huitt-Zollars, Inc. Dallas
1717 McKinney Avenue, Suite 1400
Dallas, Texas 5202-1236

1 1/2"=1'-0"
October 2011

BEARING ASSEMBLY TYPE 2
SPHERICAL BEARING

---- --

EP-05820

REV.	DATE	TITLE

NOTES:
ALL COORDINATES ARE RELATIVE TO PROJECT REFERENCE POINT, SEE PLAN P-00006

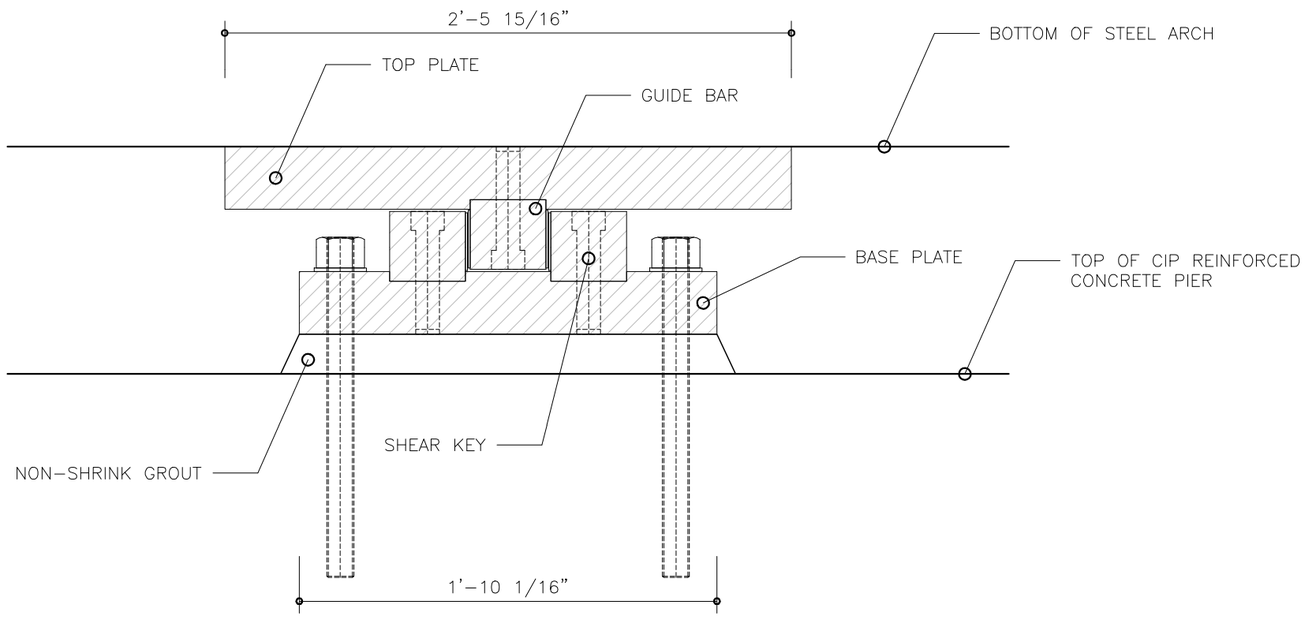

STANDARD SECTION BEARING TYPE 3: GUIDED SLIDING BEARING

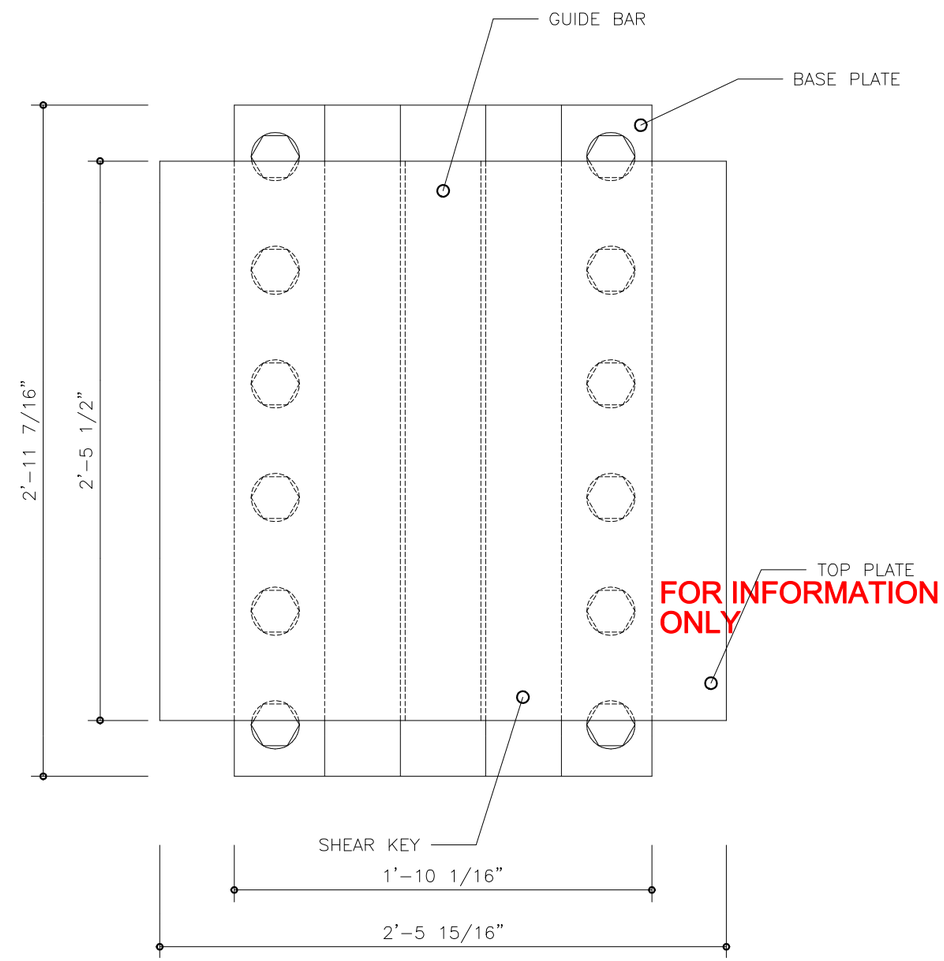

STANDARD PLAN BEARING TYPE 3: GUIDED SLIDING BEARING

IH30 FRONTAGE ROAD BRIDGES
DALLAS, TX, USA

50% ENGINEERING

EASTBOUND BRIDGE STEEL PLANS

(C) 2011 SANTIAGO CALATRAVA VALLS. ALL RIGHTS RESERVED.
ALL DRAWINGS ARE FOR DESIGN PURPOSES ONLY. NOT TO BE USED FOR BIDDING OR CONSTRUCTION.

CITY OF DALLAS

Texas Department of Transportation

SANTIAGO CALATRAVA
ARCHITECT & ENGINEER
PARKRING 11 - 8002 ZÜRICH, SUISSE
TEL: (+41) 44 204 5000 FAX: (+41) 44 204 5002

HUITT~ZOLLARS
Huitt-Zollars, Inc. Dallas
1717 McKinney Avenue, Suite 1400
Dallas, Texas 5202-1236

1 1/2"=1'-0"

October 2011

BEARING ASSEMBLY TYPE 3
GUIDED SLIDING BEARING

--

EP-05830

REV.	DATE	TITLE

NOTES:
ALL COORDINATES ARE RELATIVE TO PROJECT REFERENCE POINT, SEE PLAN P–00006

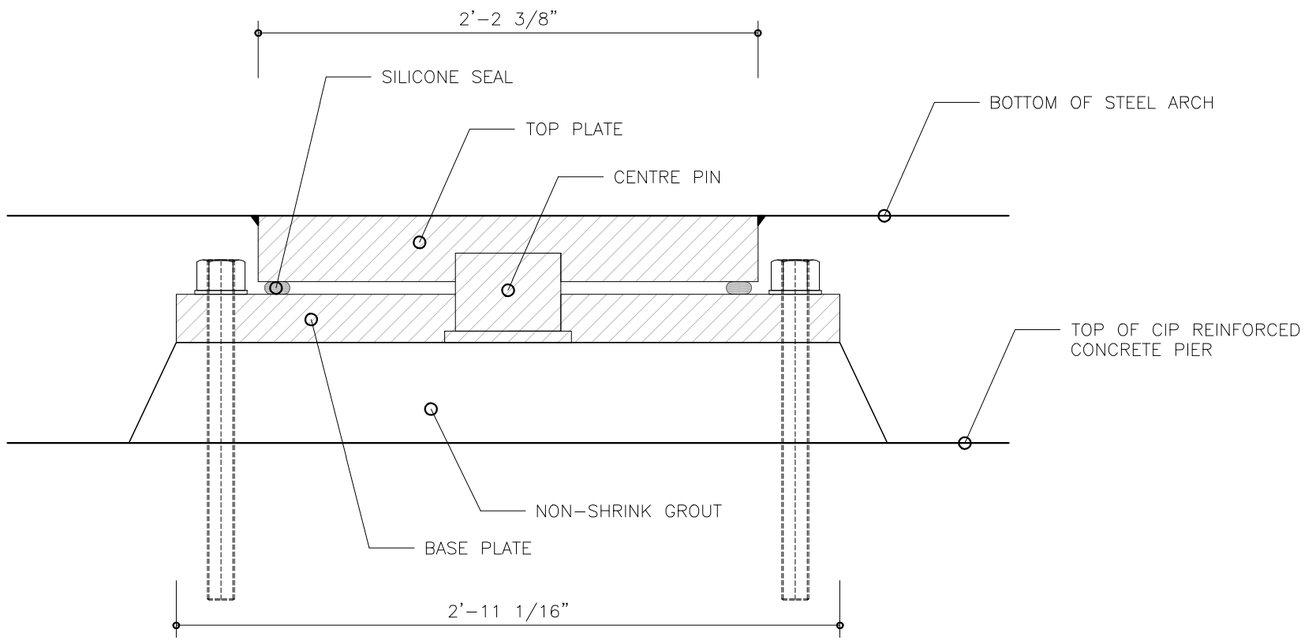

STANDARD SECTION BEARING TYPE 4: FIXED PIN BEARING

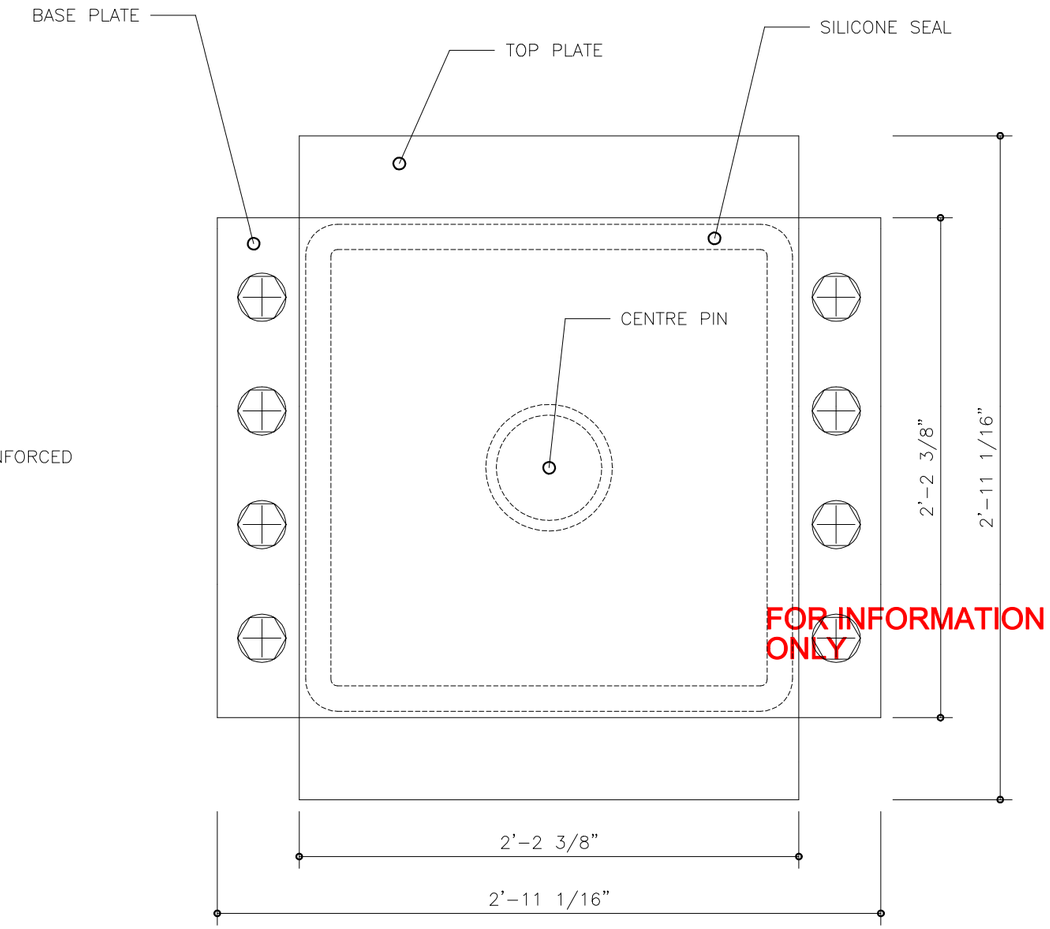

STANDARD PLAN BEARING TYPE 3: FIXED PIN BEARING

IH30 FRONTAGE ROAD BRIDGES
DALLAS, TX, USA

50% ENGINEERING

EASTBOUND BRIDGE STEEL PLANS

(C) 2011 SANTIAGO CALATRAVA VALLS. ALL RIGHTS RESERVED.
ALL DRAWINGS ARE FOR DESIGN PURPOSES ONLY. NOT TO BE USED FOR BIDDING OR CONSTRUCTION.

CITY OF DALLAS

©2011 Texas Department of Transportation

SANTIAGO CALATRAVA
ARCHITECT & ENGINEER
PARKRING 11 - 8002 ZÜRICH, SUISSE
TEL: (+41) 44 204 5000 FAX: (+41) 44 204 5002

HUITT~ZOLLARS
Huitt-Zollars, Inc. Dallas
1717 McKinney Avenue, Suite 1400
Dallas, Texas 5202-1236

October 2011

BEARING ASSEMBLY TYPE 4
FIXED PIN BEARING

--- --

EP-05840

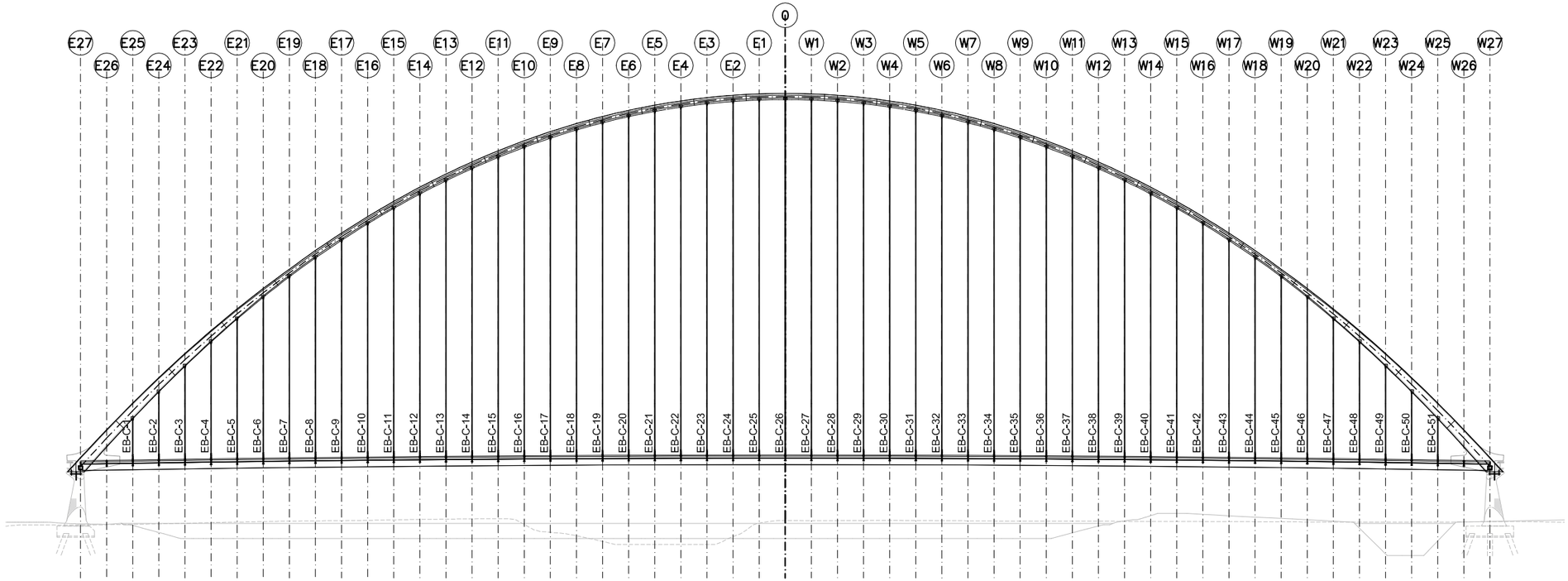

EAST BOUND NORTH ELEVATION (SECTION): CABLE HANGERS OVERVIEW

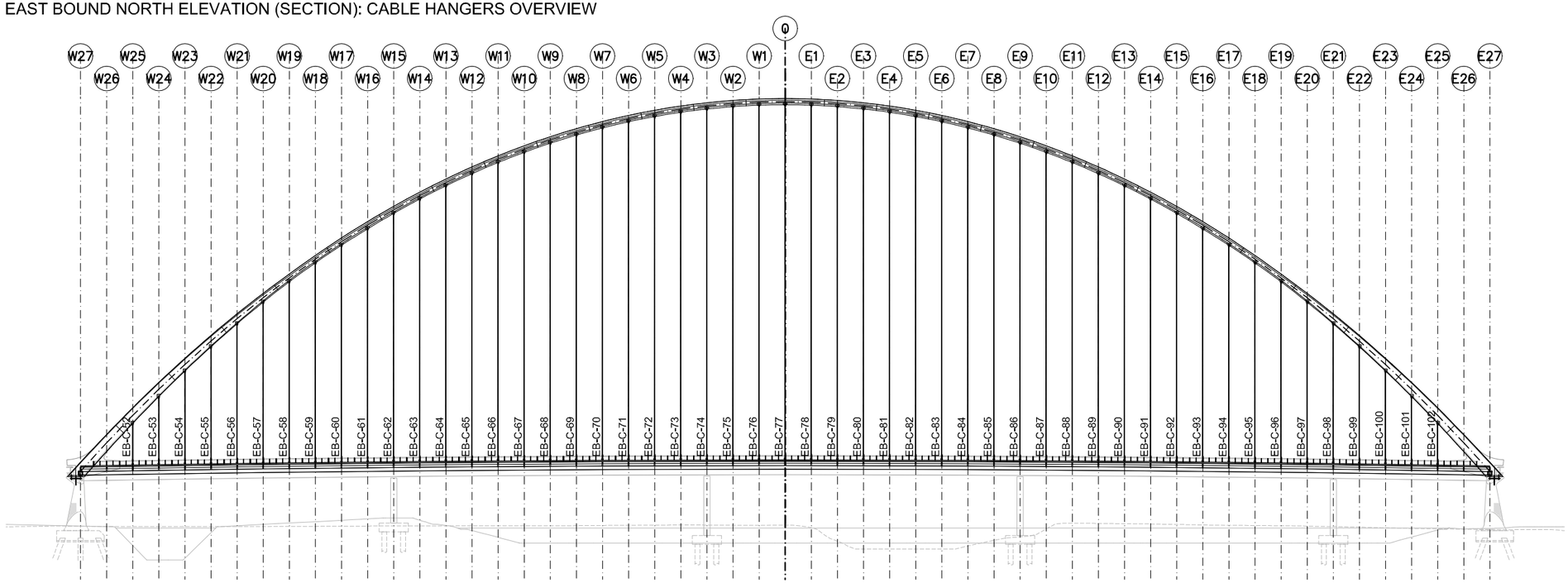

EAST BOUND SOUTH ELEVATION: CABLE HANGERS OVERVIEW

REV.	DATE	TITLE

NOTES:
ALL COORDINATES ARE RELATIVE TO PROJECT REFERENCE POINT, SEE PLAN P-00006

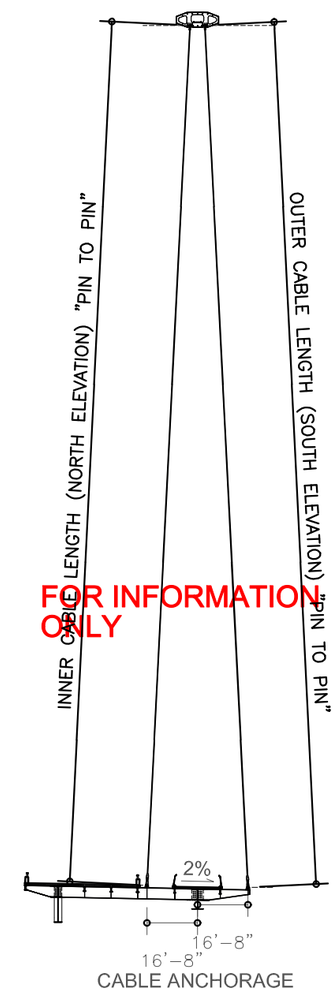

FOR INFORMATION ONLY

IH30 FRONTAGE ROAD BRIDGES
DALLAS, TX, USA

50% ENGINEERING

EASTBOUND BRIDGE CABLE PLANS

(C) 2011 SANTIAGO CALATRAVA VALLS. ALL RIGHTS RESERVED.
ALL DRAWINGS ARE FOR DESIGN PURPOSES ONLY. NOT TO BE USED FOR BIDDING OR CONSTRUCTION.

CITY OF DALLAS

©2011 Texas Department of Transportation

SANTIAGO CALATRAVA
ARCHITECT & ENGINEER
PARKRING 11 - 8002 ZÜRICH, SUISSE
TEL: (+41) 44 204 5000 FAX: (+41) 44 204 5002

HUITT~ZOLLARS
Huitt-Zollars, Inc. Dallas
1717 McKinney Avenue, Suite 1400
Dallas, Texas 5202-1236

SCALE ----
DATE October 2011
DRAWN BY ---
CHECKED --

TITLE
CABLE HANGERS OVERVIEW - ELEVATIONS

DRAWING NO.
EP-06100

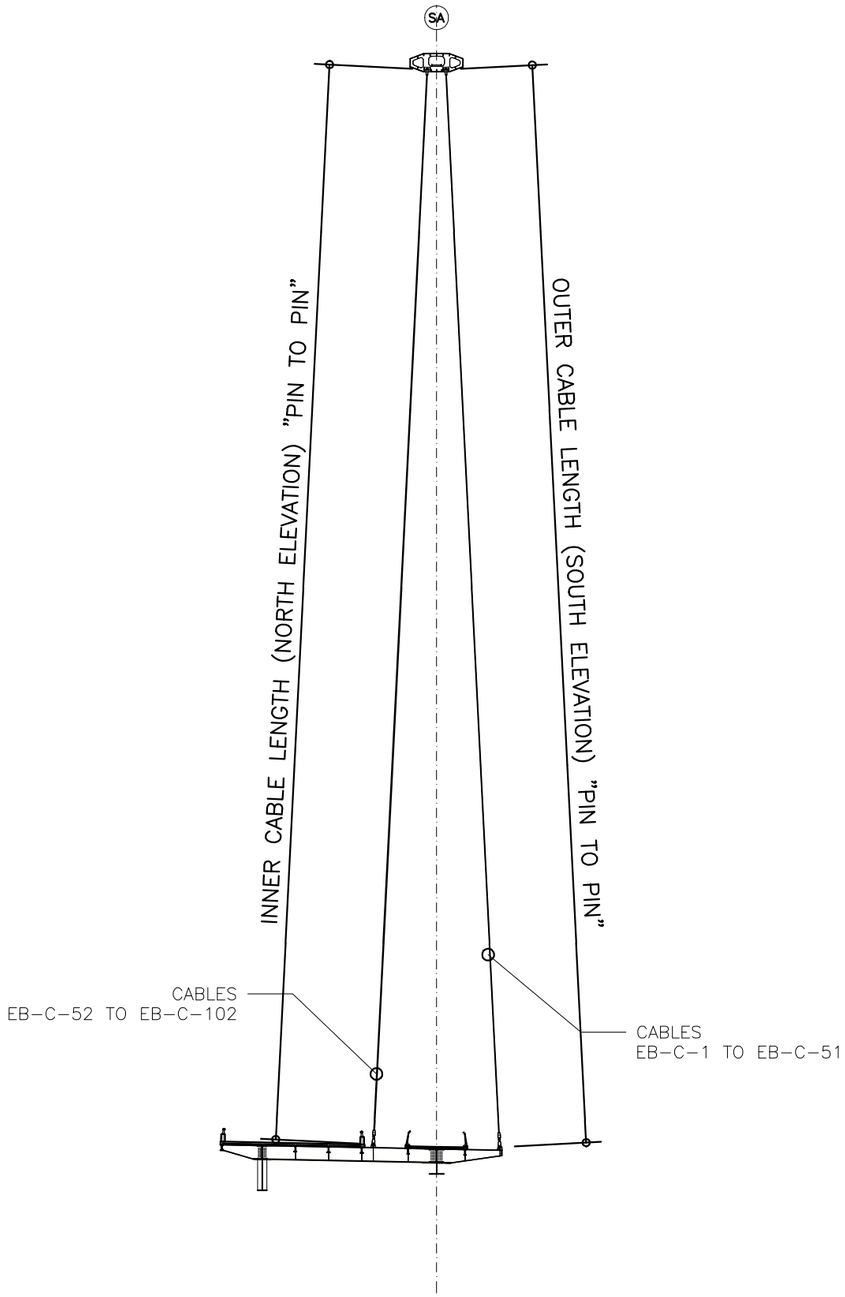

TYPICAL CROSS SECTION (SCALE 1"=40'-0")

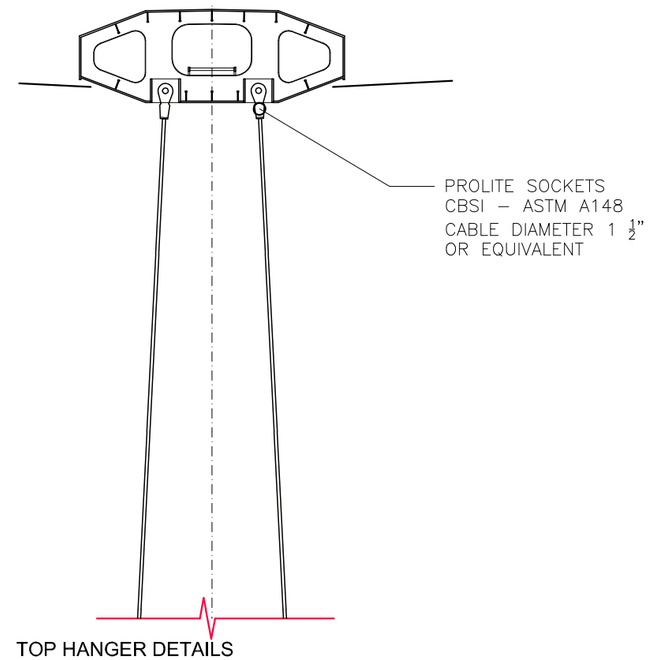

TOP HANGER DETAILS
INNER AND OUTER CABLE (SCALE 1/8"=1'-0")

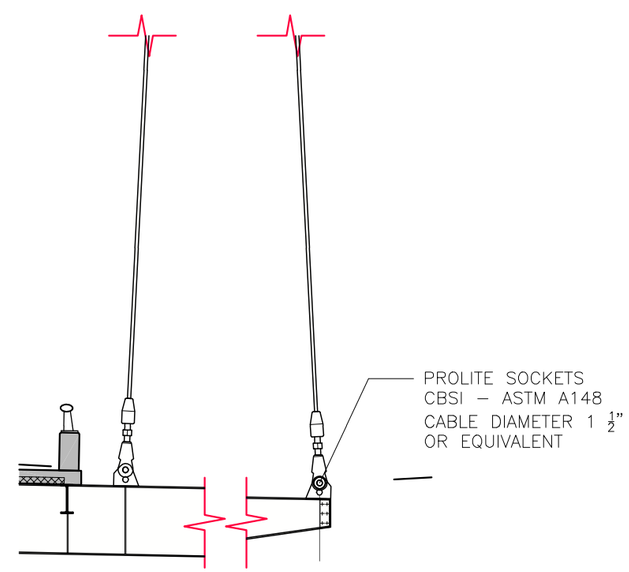

DECK LEVEL HANGER DETAILS

INNER CABLE OUTER CABLE (SCALE 1/8"=1'-0")

REV.	DATE	TITLE

NOTES:
ALL COORDINATES ARE RELATIVE TO PROJECT REFERENCE POINT, SEE PLAN P-00006

FOR INFORMATION ONLY

IH30 FRONTAGE ROAD BRIDGES
DALLAS, TX, USA

50% ENGINEERING

EASTBOUND BRIDGE CABLE PLANS

(C) 2011 SANTIAGO CALATRAVA VALLS. ALL RIGHTS RESERVED.
ALL DRAWINGS ARE FOR DESIGN PURPOSES ONLY. NOT TO BE USED FOR BIDDING OR CONSTRUCTION.

CITY OF DALLAS

©2011 Texas Department of Transportation

SANTIAGO CALATRAVA
ARCHITECT & ENGINEER
PARKRING 11 - 8002 ZÜRICH, SUISSE
TEL: (+41) 44 204 5000 FAX: (+41) 44 204 5002

HUITT~ZOLLARS
Huitt-Zollars, Inc. Dallas
1717 McKinney Avenue, Suite 1400
Dallas, Texas 5202-1236

SCALE	TITLE
----	CABLE HANGERS OVERVIEW - SECTION
DATE October 2011	
DRAWN BY ---- / CHECKED --	DRAWING NO. EP-06101

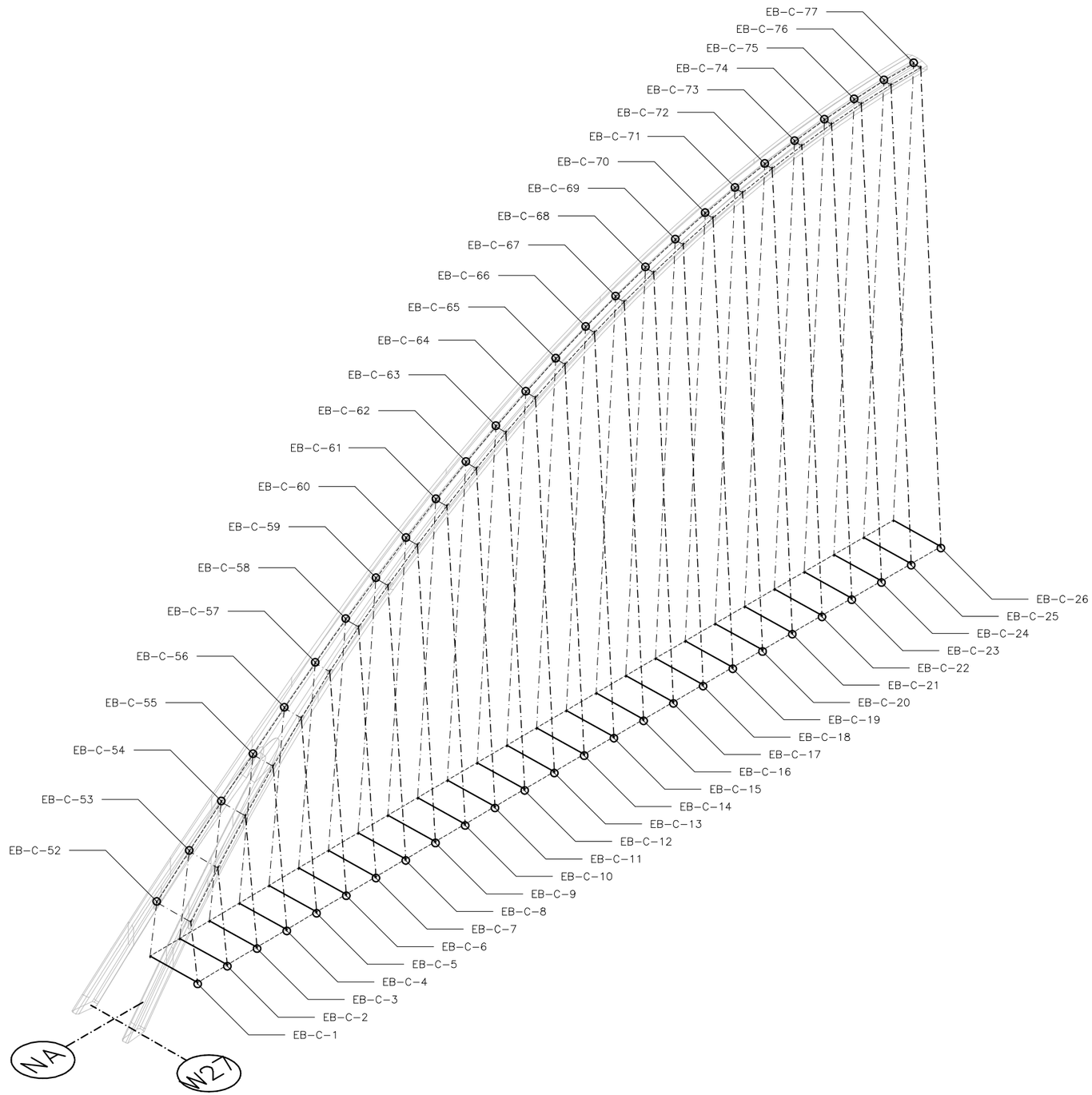

INNER CABLE		OUTER CABLE	
NORTH		SOUTH	
CABLE	LENGTH	CABLE	LENGTH
EB-C-1	34.64'	EB-C-52	35.30'
EB-C-2	55.83'	EB-C-53	56.50'
EB-C-3	75.98'	EB-C-54	76.65'
EB-C-4	94.74'	EB-C-55	95.40'
EB-C-5	112.79'	EB-C-56	113.46'
EB-C-6	129.85'	EB-C-57	130.51'
EB-C-7	145.94'	EB-C-58	146.60'
EB-C-8	160.25'	EB-C-59	160.91'
EB-C-9	174.05'	EB-C-60	174.72'
EB-C-10	186.98'	EB-C-61	187.64'
EB-C-11	199.04'	EB-C-62	199.71'
EB-C-12	210.25'	EB-C-63	210.92'
EB-C-13	220.63'	EB-C-64	221.30'
EB-C-14	230.19'	EB-C-65	230.85'
EB-C-15	238.93'	EB-C-66	239.60'
EB-C-16	246.88'	EB-C-67	247.55'
EB-C-17	254.04'	EB-C-68	254.71'
EB-C-18	260.43'	EB-C-69	261.09'
EB-C-19	266.04'	EB-C-70	266.70'
EB-C-20	270.89'	EB-C-71	271.55'
EB-C-21	274.98'	EB-C-72	275.64'
EB-C-22	278.32'	EB-C-73	278.99'
EB-C-23	280.91'	EB-C-74	281.58'
EB-C-24	282.77'	EB-C-75	283.43'
EB-C-25	283.88'	EB-C-76	284.54'
EB-C-26	283.87'	EB-C-77	284.54'
EB-C-27	283.88'	EB-C-78	284.54'
EB-C-28	282.77'	EB-C-79	283.43'
EB-C-29	280.91'	EB-C-80	281.58'
EB-C-30	278.32'	EB-C-81	278.99'
EB-C-31	274.98'	EB-C-82	275.64'
EB-C-32	270.89'	EB-C-83	271.55'
EB-C-33	266.04'	EB-C-84	266.70'
EB-C-34	260.43'	EB-C-85	261.09'
EB-C-35	254.04'	EB-C-86	254.71'
EB-C-36	246.88'	EB-C-87	247.55'
EB-C-37	238.93'	EB-C-88	239.60'
EB-C-38	230.19'	EB-C-89	230.85'
EB-C-39	220.63'	EB-C-90	221.30'
EB-C-40	210.25'	EB-C-91	210.92'
EB-C-41	199.04'	EB-C-92	199.71'
EB-C-42	186.98'	EB-C-93	187.64'
EB-C-43	174.05'	EB-C-94	174.72'
EB-C-44	160.25'	EB-C-95	160.91'
EB-C-45	145.94'	EB-C-96	146.60'
EB-C-46	129.85'	EB-C-97	130.51'
EB-C-47	112.79'	EB-C-98	113.46'
EB-C-48	94.74'	EB-C-99	95.40'
EB-C-49	75.98'	EB-C-100	76.65'
EB-C-50	55.83'	EB-C-101	56.50'
EB-C-51	34.64'	EB-C-102	35.30'

REV.	DATE	TITLE

NOTES:
ALL COORDINATES ARE RELATIVE TO PROJECT REFERENCE POINT, SEE PLAN P-00006

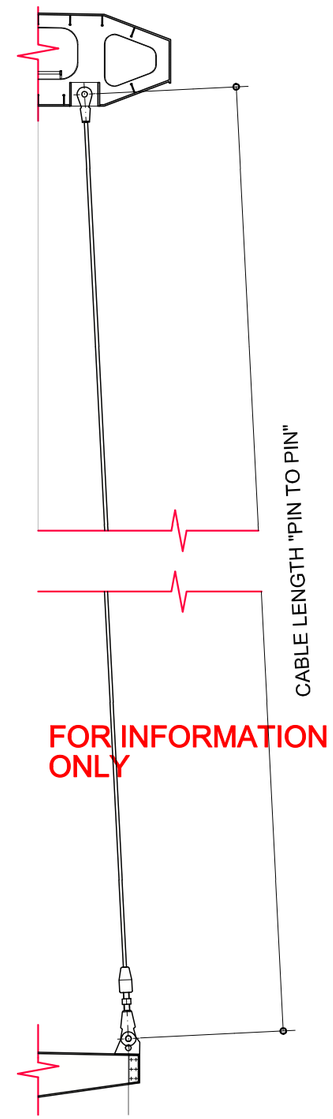

IH30 FRONTAGE ROAD BRIDGES
DALLAS, TX, USA

50% ENGINEERING

EASTBOUND BRIDGE CABLE PLANS

(C) 2011 SANTIAGO CALATRAVA VALLS. ALL RIGHTS RESERVED.
ALL DRAWINGS ARE FOR DESIGN PURPOSES ONLY. NOT TO BE USED FOR BIDDING OR CONSTRUCTION.

CITY OF DALLAS

©2011 Texas Department of Transportation

SANTIAGO CALATRAVA
ARCHITECT & ENGINEER
PARKRING 11 - 8002 ZÜRICH, SUISSE
TEL: (+41) 44 204 5000 FAX: (+41) 44 204 5002

HUITT~ZOLLARS
Huitt-Zollars, Inc. Dallas
1717 McKinney Avenue, Suite 1400
Dallas, Texas 5202-1236

SCALE ----
DATE October 2011
TITLE CABLE LENGTHS 1
DRAWN BY ----
CHECKED --
DRAWING NO. EP-06102

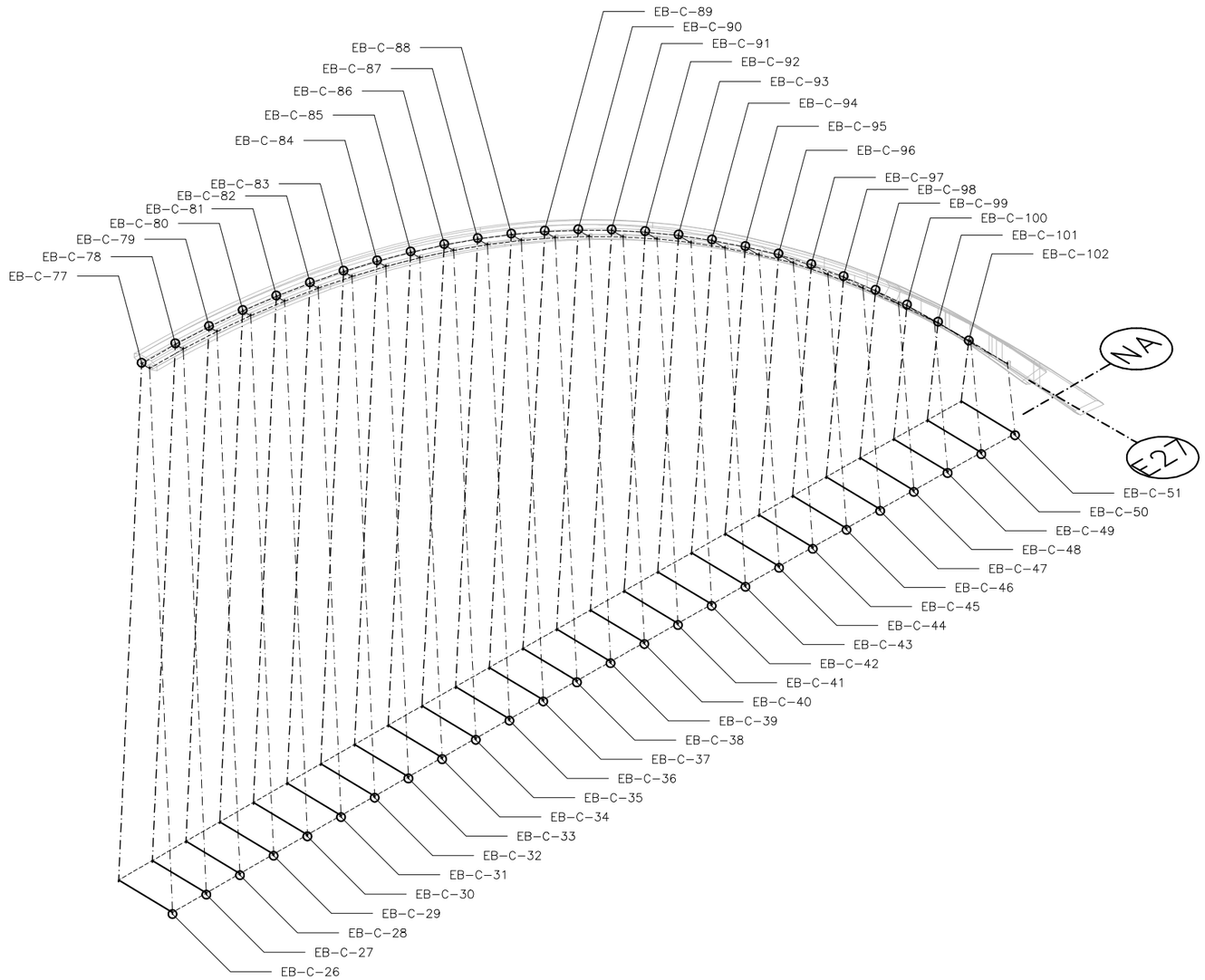

INNER CABLE		OUTER CABLE	
NORTH		SOUTH	
CABLE	LENGTH	CABLE	LENGTH
EB-C-1	34.64'	EB-C-52	35.30'
EB-C-2	55.83'	EB-C-53	56.50'
EB-C-3	75.98'	EB-C-54	76.65'
EB-C-4	94.74'	EB-C-55	95.40'
EB-C-5	112.79'	EB-C-56	113.46'
EB-C-6	129.85'	EB-C-57	130.51'
EB-C-7	145.94'	EB-C-58	146.60'
EB-C-8	160.25'	EB-C-59	160.91'
EB-C-9	174.05'	EB-C-60	174.72'
EB-C-10	186.98'	EB-C-61	187.64'
EB-C-11	199.04'	EB-C-62	199.71'
EB-C-12	210.25'	EB-C-63	210.92'
EB-C-13	220.63'	EB-C-64	221.30'
EB-C-14	230.19'	EB-C-65	230.85'
EB-C-15	238.93'	EB-C-66	239.60'
EB-C-16	246.88'	EB-C-67	247.55'
EB-C-17	254.04'	EB-C-68	254.71'
EB-C-18	260.43'	EB-C-69	261.09'
EB-C-19	266.04'	EB-C-70	266.70'
EB-C-20	270.89'	EB-C-71	271.55'
EB-C-21	274.98'	EB-C-72	275.64'
EB-C-22	278.32'	EB-C-73	278.99'
EB-C-23	280.91'	EB-C-74	281.58'
EB-C-24	282.77'	EB-C-75	283.43'
EB-C-25	283.88'	EB-C-76	284.54'
EB-C-26	283.87'	EB-C-77	284.54'
EB-C-27	283.88'	EB-C-78	284.54'
EB-C-28	282.77'	EB-C-79	283.43'
EB-C-29	280.91'	EB-C-80	281.58'
EB-C-30	278.32'	EB-C-81	278.99'
EB-C-31	274.98'	EB-C-82	275.64'
EB-C-32	270.89'	EB-C-83	271.55'
EB-C-33	266.04'	EB-C-84	266.70'
EB-C-34	260.43'	EB-C-85	261.09'
EB-C-35	254.04'	EB-C-86	254.71'
EB-C-36	246.88'	EB-C-87	247.55'
EB-C-37	238.93'	EB-C-88	239.60'
EB-C-38	230.19'	EB-C-89	230.85'
EB-C-39	220.63'	EB-C-90	221.30'
EB-C-40	210.25'	EB-C-91	210.92'
EB-C-41	199.04'	EB-C-92	199.71'
EB-C-42	186.98'	EB-C-93	187.64'
EB-C-43	174.05'	EB-C-94	174.72'
EB-C-44	160.25'	EB-C-95	160.91'
EB-C-45	145.94'	EB-C-96	146.60'
EB-C-46	129.85'	EB-C-97	130.51'
EB-C-47	112.79'	EB-C-98	113.46'
EB-C-48	94.74'	EB-C-99	95.40'
EB-C-49	75.98'	EB-C-100	76.65'
EB-C-50	55.83'	EB-C-101	56.50'
EB-C-51	34.64'	EB-C-102	35.30'

REV.	DATE	TITLE

NOTES:
ALL COORDINATES ARE RELATIVE TO PROJECT REFERENCE POINT, SEE PLAN P-00006

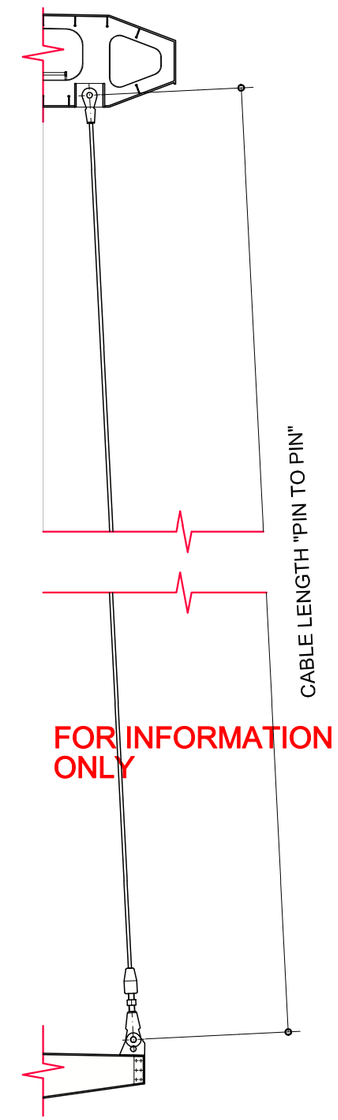

FOR INFORMATION ONLY

IH30 FRONTAGE ROAD BRIDGES
DALLAS, TX, USA

50% ENGINEERING

EASTBOUND BRIDGE CABLE PLANS

(C) 2011 SANTIAGO CALATRAVA VALLS. ALL RIGHTS RESERVED.
ALL DRAWINGS ARE FOR DESIGN PURPOSES ONLY. NOT TO BE USED FOR BIDDING OR CONSTRUCTION.

CITY OF DALLAS

©2011 Texas Department of Transportation

SANTIAGO CALATRAVA
ARCHITECT & ENGINEER
PARKRING 11 - 8002 ZÜRICH, SUISSE
TEL: (+41) 44 204 5000 FAX: (+41) 44 204 5002

HUITT~ZOLLARS
Huitt-Zollars, Inc. Dallas
1717 McKinney Avenue, Suite 1400
Dallas, Texas 5202-1236

SCALE ----
DATE October 2011
TITLE CABLE LENGTHS 2
DRAWN BY ----
CHECKED --
DRAWING NO. EP-06103

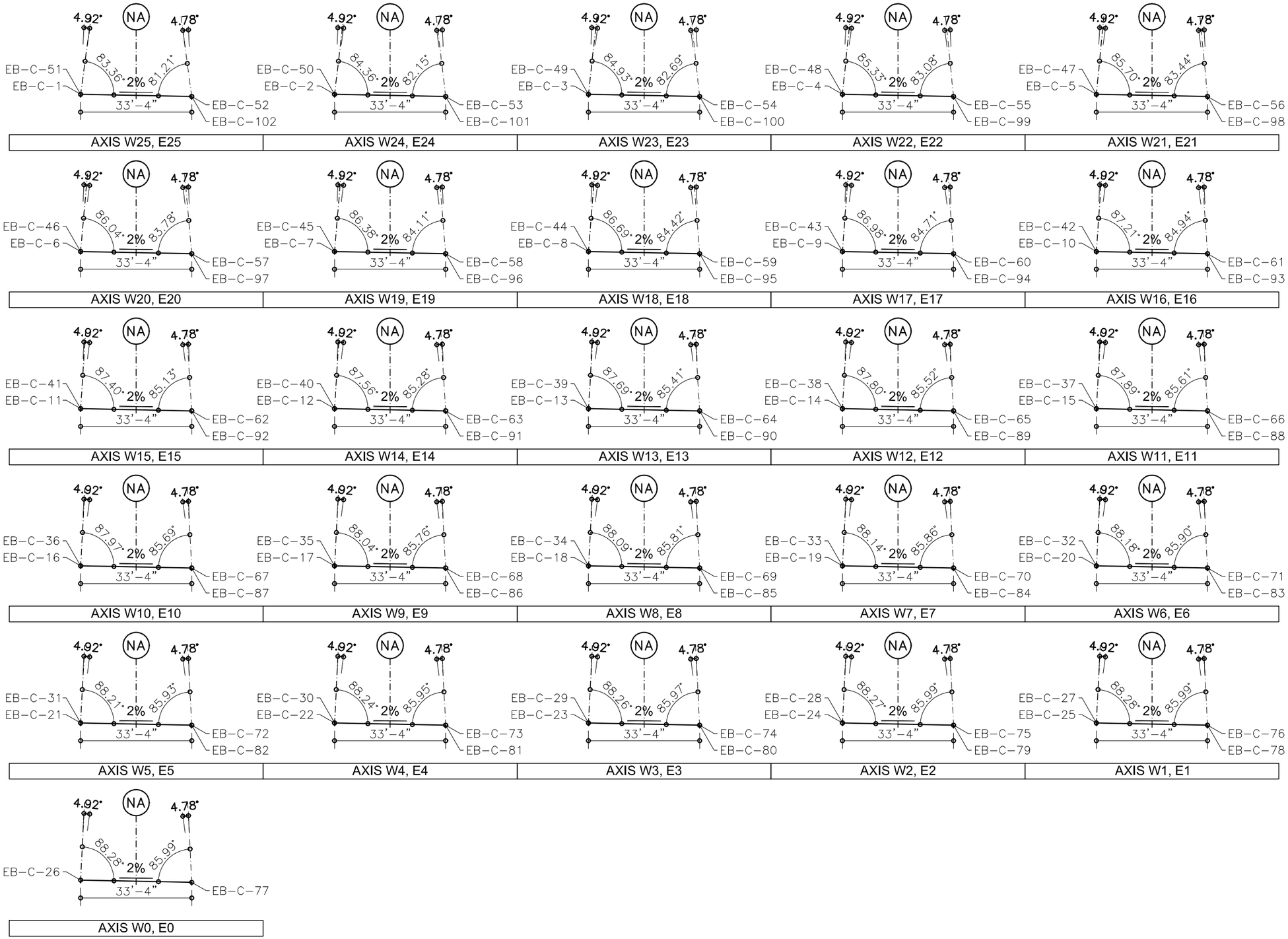

REV.	DATE	TITLE

NOTES:
ALL COORDINATES ARE RELATIVE TO PROJECT REFERENCE POINT, SEE PLAN P-00006

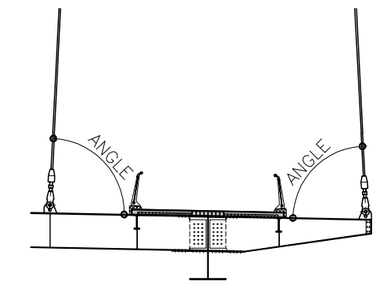

FOR INFORMATION ONLY

IH30 FRONTAGE ROAD BRIDGES
DALLAS, TX, USA

50% ENGINEERING

EASTBOUND BRIDGE CABLE PLANS

(C) 2011 SANTIAGO CALATRAVA VALLS. ALL RIGHTS RESERVED.
ALL DRAWINGS ARE FOR DESIGN PURPOSES ONLY. NOT TO BE USED FOR BIDDING OR CONSTRUCTION.

CITY OF DALLAS

©2011 Texas Department of Transportation

SANTIAGO CALATRAVA
ARCHITECT & ENGINEER
PARKRING 11 - 8002 ZÜRICH, SUISSE
TEL: (+41) 44 204 5000 FAX: (+41) 44 204 5002

HUITT~ZOLLARS
Huitt-Zollars, Inc. Dallas
1717 McKinney Avenue, Suite 1400
Dallas, Texas 5202-1236

SCALE	TITLE
1"=30'-0"	CABLE ANGLES
DATE: October 2011	
DRAWN BY: ---- / CHECKED: --	DRAWING NO. EP-06104

REV.	DATE	TITLE

NOTES:
ALL COORDINATES ARE RELATIVE TO PROJECT REFERENCE POINT, SEE PLAN P-00006

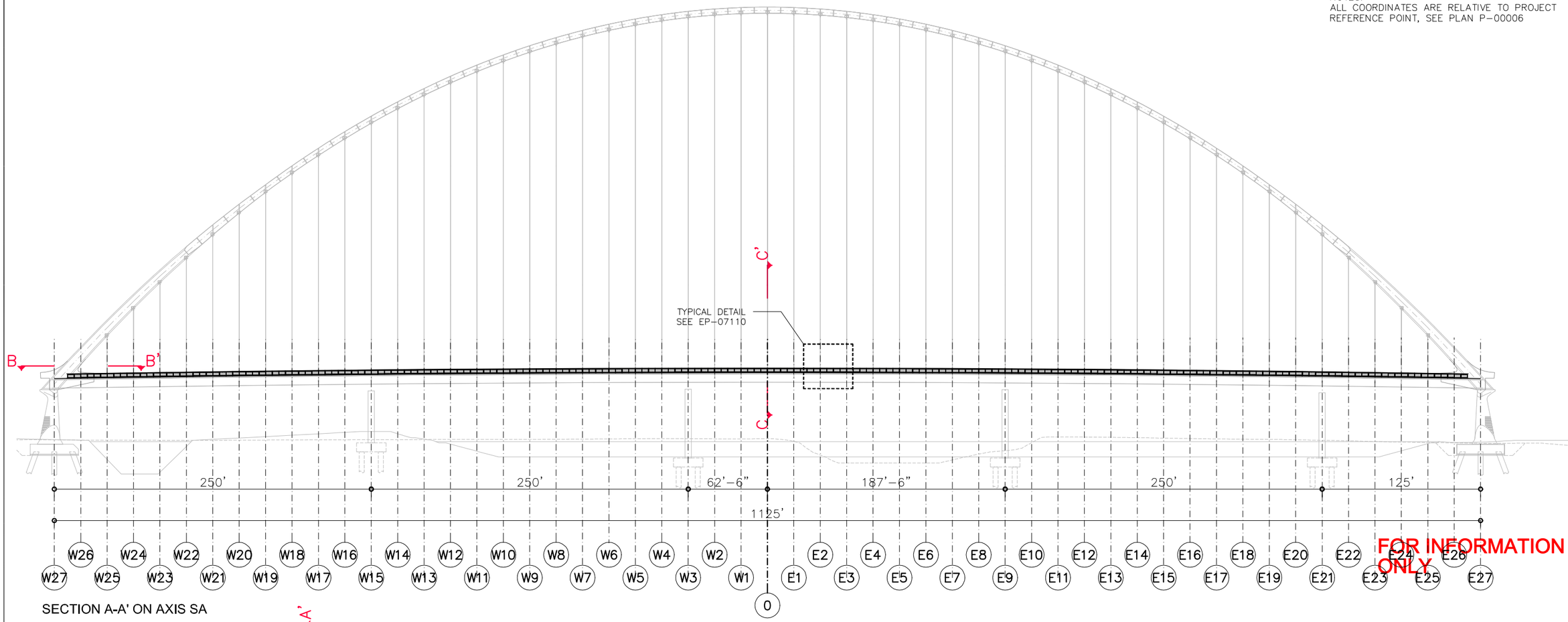

FOR INFORMATION ONLY

SECTION A-A' ON AXIS SA

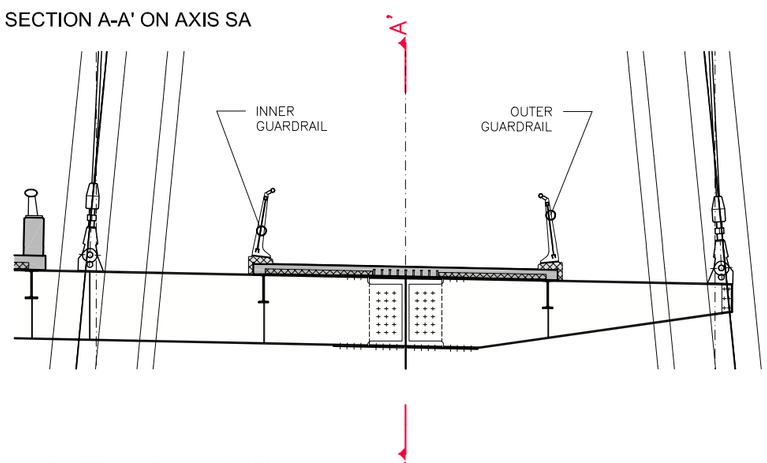

C-C' PARTIAL CROSS SECTION - 1/8"=1'-0"

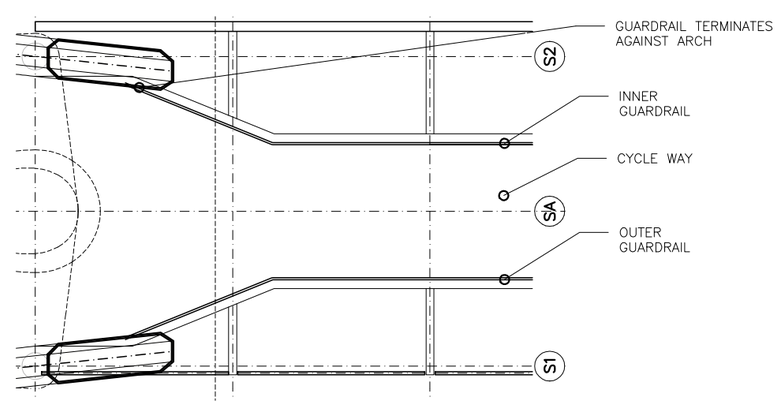

B-B' PARTIAL PLAN - 1/16"=1'-0"

IH30 FRONTAGE ROAD BRIDGES
DALLAS, TX, USA

50% ENGINEERING

EASTBOUND BRIDGE DETAIL PLANS

(C) 2011 SANTIAGO CALATRAVA VALLS. ALL RIGHTS RESERVED.
ALL DRAWINGS ARE FOR DESIGN PURPOSES ONLY. NOT TO BE USED FOR BIDDING OR CONSTRUCTION.

CITY OF DALLAS

©2013 Texas Department of Transportation

SANTIAGO CALATRAVA
ARCHITECT & ENGINEER
PARKRING 11 - 8002 ZÜRICH, SUISSE
TEL: (+41) 44 204 5000 FAX: (+41) 44 204 5002

HUITT~ZOLLARS
Huitt-Zollars, Inc. Dallas
1717 McKinney Avenue, Suite 1400
Dallas, Texas 5202-1236

1"=80'

October 2011

OVERVIEW GUARDRAIL

---- --

EP-07100

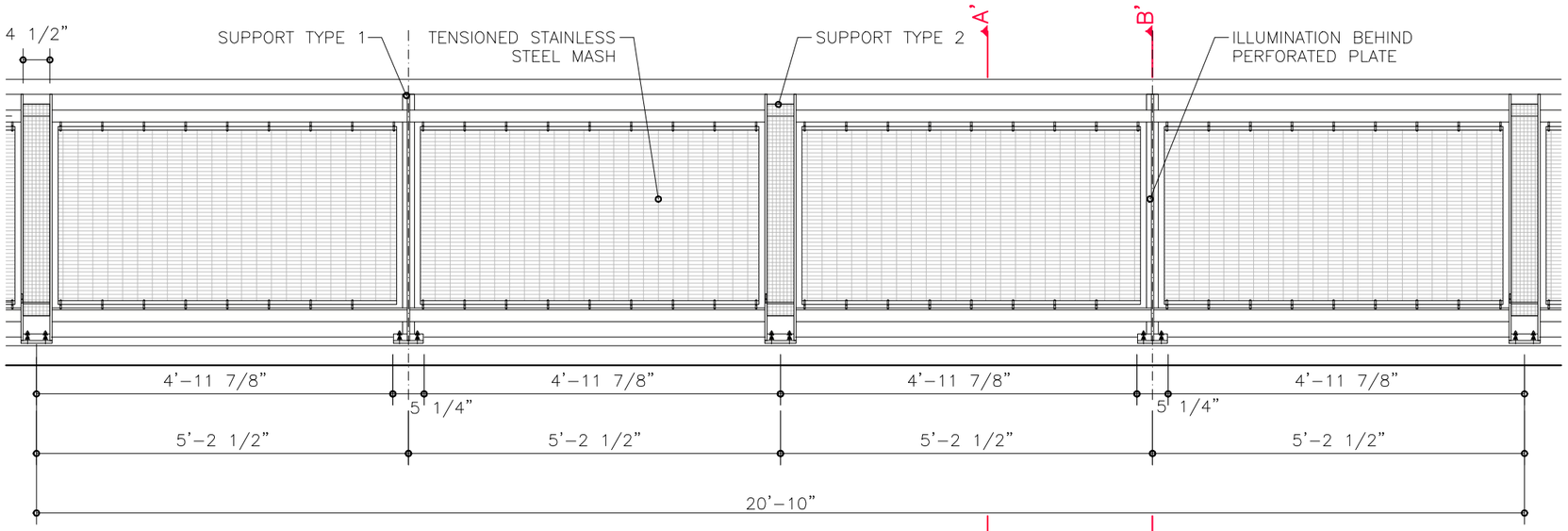

PARTIAL ELEVATION

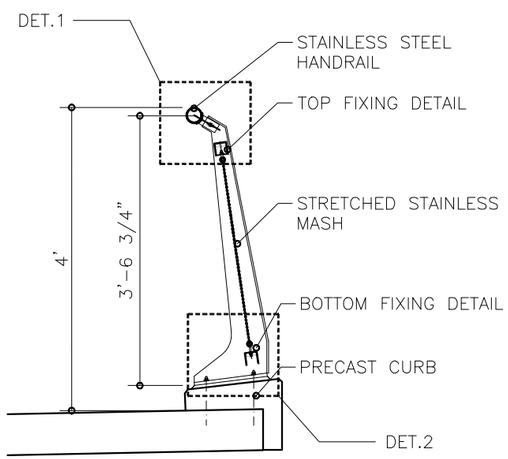

SECTION A-A'

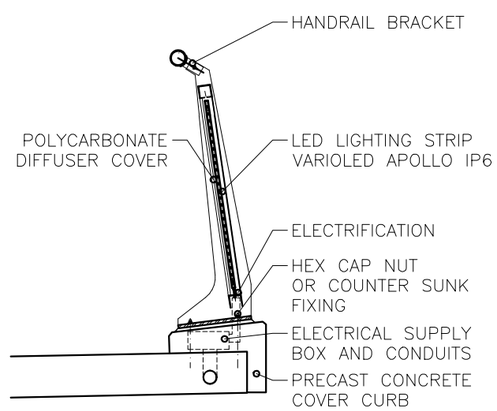

SECTION B-B'

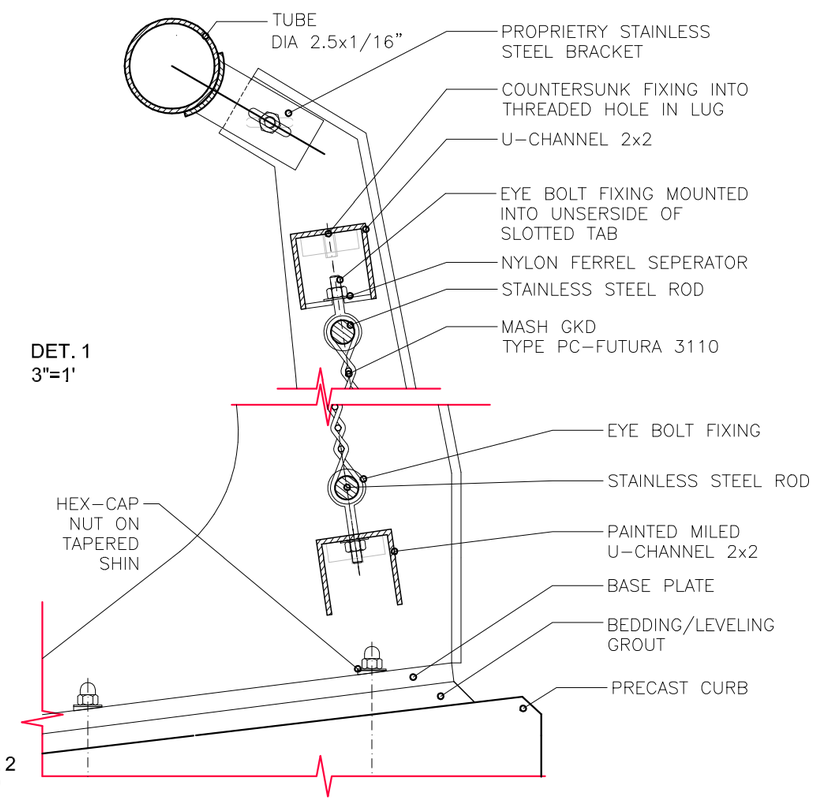

DET. 1
3"=1'

DET. 2
3"=1'

REV.	DATE	TITLE

NOTES:
ALL COORDINATES ARE RELATIVE TO PROJECT REFERENCE POINT, SEE PLAN P-00006

FOR INFORMATION ONLY

IH30 FRONTAGE ROAD BRIDGES
DALLAS, TX, USA

50% ENGINEERING

EASTBOUND BRIDGE DETAIL PLANS

(C) 2011 SANTIAGO CALATRAVA VALLS. ALL RIGHTS RESERVED.
ALL DRAWINGS ARE FOR DESIGN PURPOSES ONLY. NOT TO BE USED FOR BIDDING OR CONSTRUCTION.

CITY OF DALLAS

©2011 Texas Department of Transportation

SANTIAGO CALATRAVA
ARCHITECT & ENGINEER
PARKRING 11 - 8002 ZÜRICH, SUISSE
TEL: (+41) 44 204 5000 FAX: (+41) 44 204 5002

HUITT~ZOLLARS
Huitt-Zollars, Inc. Dallas
1717 McKinney Avenue, Suite 1400
Dallas, Texas 5202-1236

SCALE ----
DATE October 2011
DRAWN BY ----
CHECKED --
TITLE GUARDRAIL - TYPICAL DETAILS
DRAWING NO. EP-07110

REV.	DATE	TITLE

NOTES:
ALL COORDINATES ARE RELATIVE TO PROJECT REFERENCE POINT, SEE PLAN P-00006

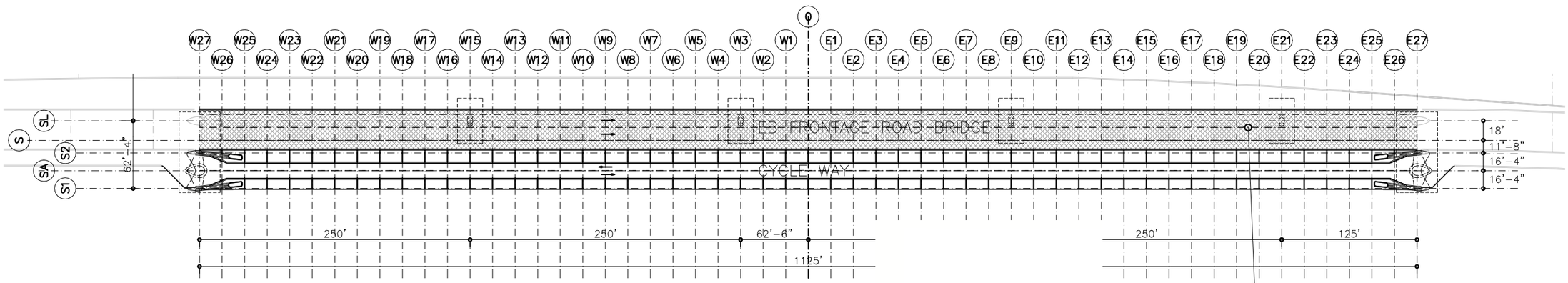

PLAN AT DECK LEVEL

FOR INFORMATION ONLY

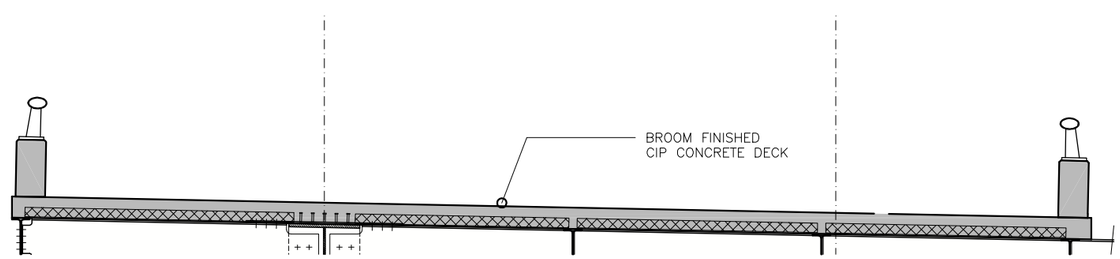

TYPICAL CROSS SECTION
3/16" = 1'-0"

IH30 FRONTAGE ROAD BRIDGES
DALLAS, TX, USA

50% ENGINEERING

EASTBOUND BRIDGE PAVEMENT PLANS

(C) 2011 SANTIAGO CALATRAVA VALLS. ALL RIGHTS RESERVED.
ALL DRAWINGS ARE FOR DESIGN PURPOSES ONLY. NOT TO BE USED FOR BIDDING OR CONSTRUCTION.

CITY OF DALLAS

©2011 Texas Department of Transportation

SANTIAGO CALATRAVA
ARCHITECT & ENGINEER
PARKRING 11 - 8002 ZÜRICH, SUISSE
TEL: (+41) 44 204 5000 FAX: (+41) 44 204 5002

HUITT~ZOLLARS
Huitt-Zollars, Inc. Dallas
1717 McKinney Avenue, Suite 1400
Dallas, Texas 5202-1236

1"=100'
October 2011
PAVEMENT ON TRAFFIC DECK OVERVIEW
---- --
EP-08100

REV.	DATE	TITLE

NOTES:
ALL COORDINATES ARE RELATIVE TO PROJECT REFERENCE POINT, SEE PLAN P-00006

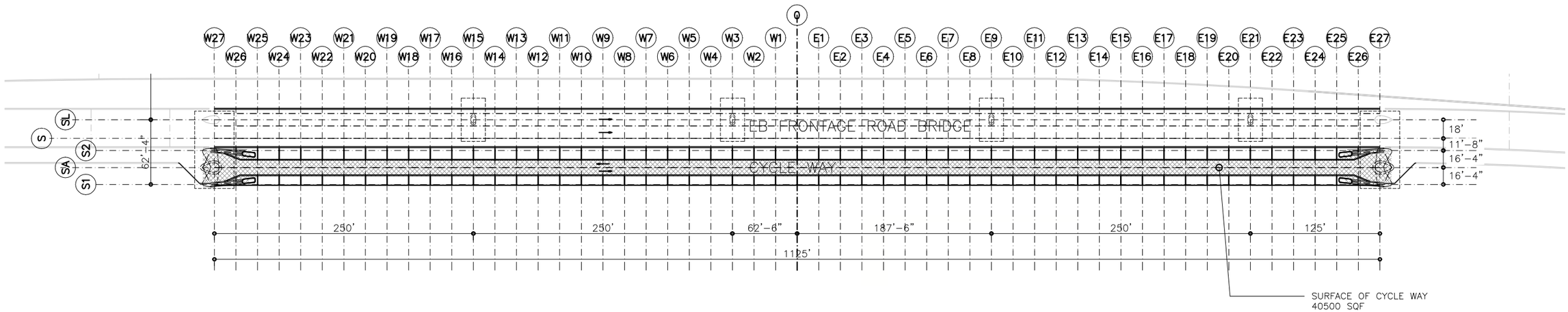

DECK LEVEL PLAN

FOR INFORMATION ONLY

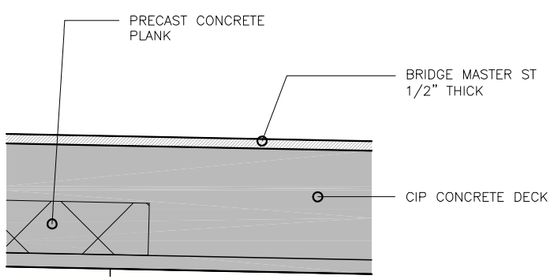

DETAIL 1
SCALE 1 1/2" = 1'-0"

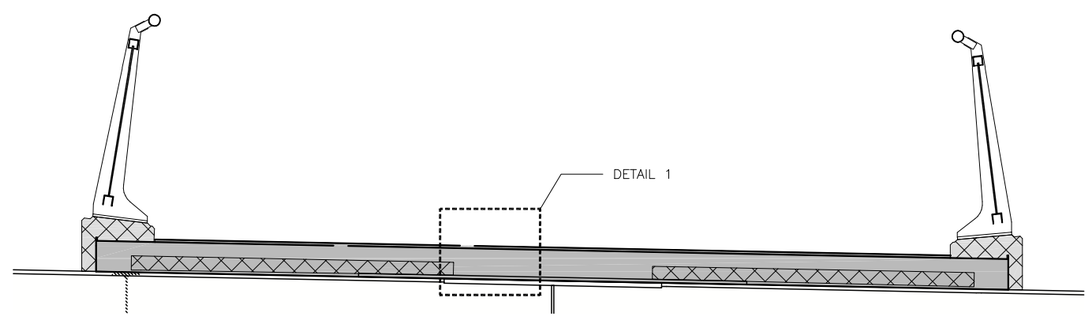

TYPICAL CROSS SECTION CYCLE DECK
SCALE 3/8" = 1'-0"

IH30 FRONTAGE ROAD BRIDGES
DALLAS, TX, USA

50% ENGINEERING

EASTBOUND BRIDGE PAVEMENT PLANS

(C) 2011 SANTIAGO CALATRAVA VALLS. ALL RIGHTS RESERVED.
ALL DRAWINGS ARE FOR DESIGN PURPOSES ONLY. NOT TO BE USED FOR BIDDING OR CONSTRUCTION.

CITY OF DALLAS

©2011 Texas Department of Transportation

SANTIAGO CALATRAVA
ARCHITECT & ENGINEER
PARKRING 11 - 8002 ZÜRICH, SUISSE
TEL: (+41) 44 204 5000 FAX: (+41) 44 204 5002

HUITT~ZOLLARS
Huitt-Zollars, Inc. Dallas
1717 McKinney Avenue, Suite 1400
Dallas, Texas 5202-1236

1"=100'
October 2011

PAVEMENT CYCLE TRACK DECK OVERVIEW

EP-08300

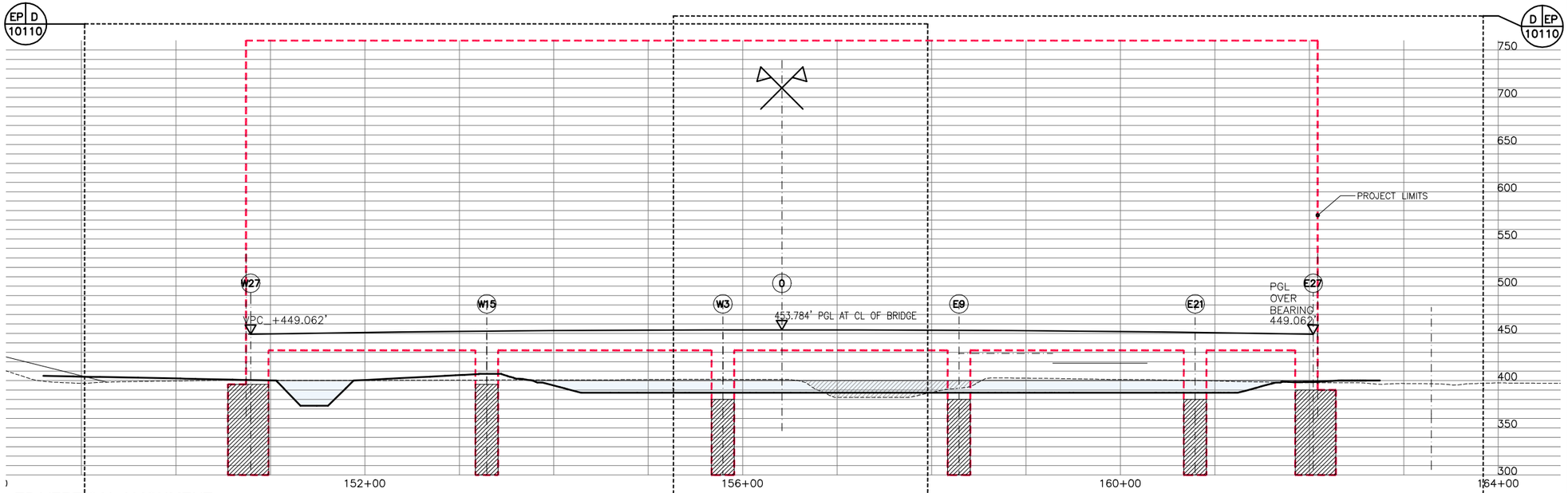

EB VERTICAL ALIGNMENT

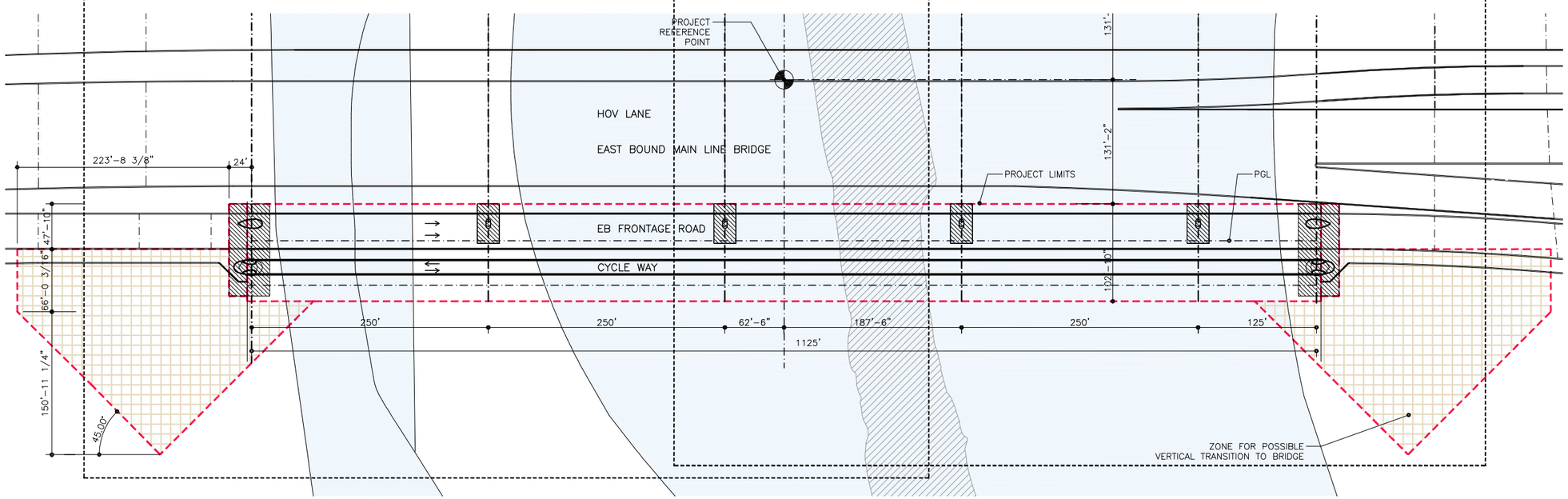

EB HORIZONTAL ALIGNMENT

REV.	DATE	TITLE

NOTES:
ALL COORDINATES ARE RELATIVE TO PROJECT REFERENCE POINT, SEE PLAN P-00006

FOR INFORMATION ONLY

IH30 FRONTAGE ROAD BRIDGES
DALLAS, TX, USA

50% ENGINEERING

EASTBOUND BRIDGE TRAFFIC PLANS

(C) 2011 SANTIAGO CALATRAVA VALLS. ALL RIGHTS RESERVED.
ALL DRAWINGS ARE FOR DESIGN PURPOSES ONLY. NOT TO BE USED FOR BIDDING OR CONSTRUCTION.

CITY OF DALLAS

©2011 Texas Department of Transportation

SANTIAGO CALATRAVA
ARCHITECT & ENGINEER
PARKRING 11 - 8002 ZÜRICH, SUISSE
TEL: (+41) 44 204 5000 FAX: (+41) 44 204 5002

HUITT~ZOLLARS
Huitt-Zollars, Inc. Dallas
1717 McKinney Avenue, Suite 1400
Dallas, Texas 5202-1236

SCALE 1/128" = 1'-0"
DATE October 2011
DRAWN BY ----
CHECKED --

TITLE OVERVIEW ALIGNMENT AND PROJECT LIMITS

DRAWING NO. EP-10100

REV.	DATE	TITLE
0	23AUG2011	FOR INFORMATION ONLY

NOTES:
ALL COORDINATES ARE RELATIVE TO PROJECT REFERENCE POINT, SEE PLAN P-00006

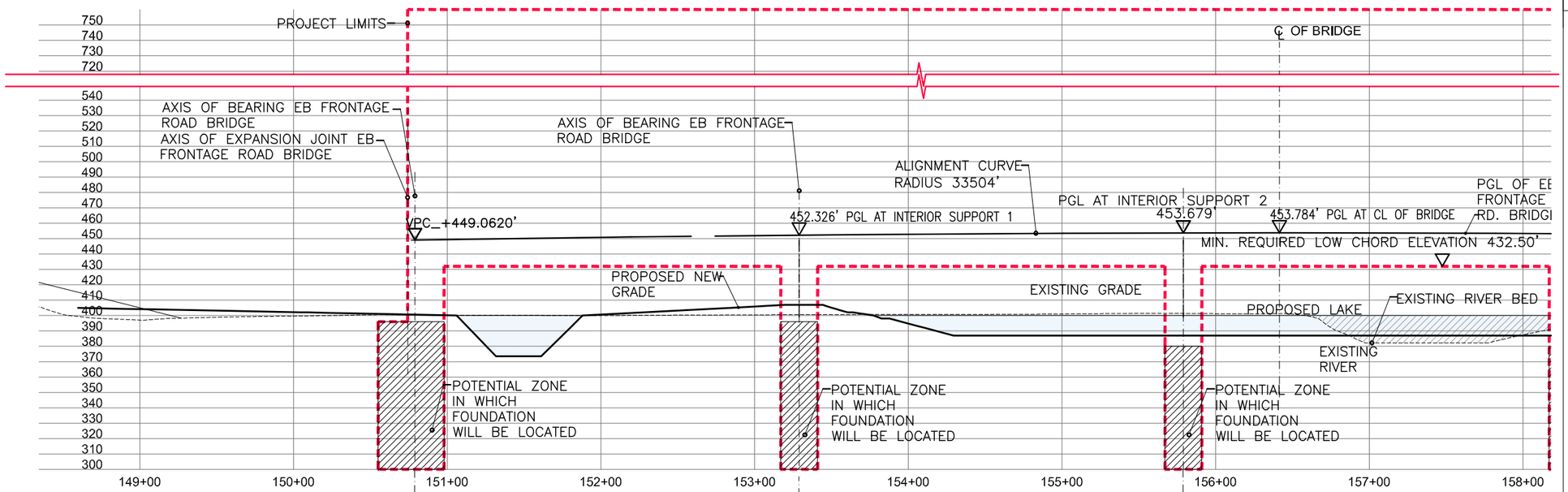

VERTICAL ALIGNMENT

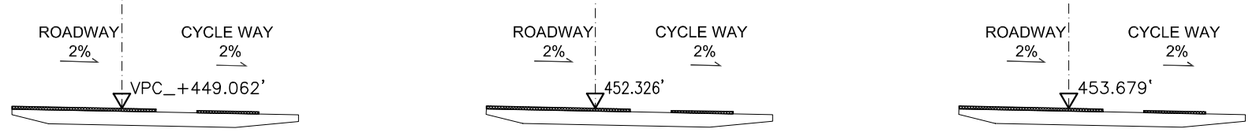

INDICATIVE CROSS SECTIONS
SCALE 1/40"=1'

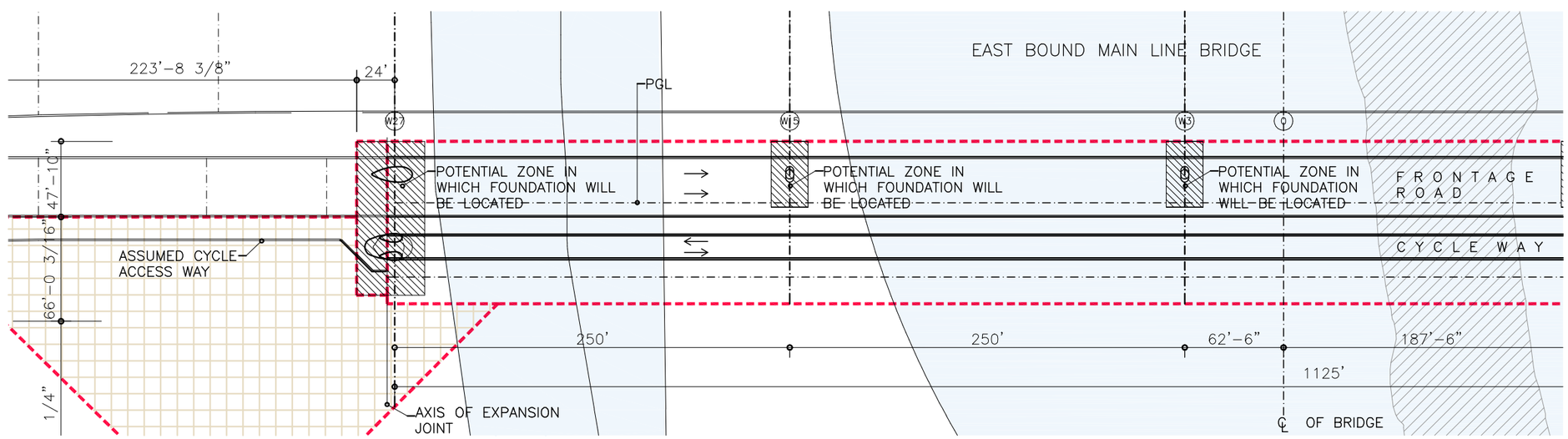

HORIZONTAL ALIGNMENT

FOR INFORMATION ONLY

IH30 FRONTAGE ROAD BRIDGES
DALLAS, TX, USA

50% ENGINEERING

EASTBOUND BRIDGE TRAFFIC PLANS

(C) 2011 SANTIAGO CALATRAVA VALLS. ALL RIGHTS RESERVED.
ALL DRAWINGS ARE FOR DESIGN PURPOSES ONLY. NOT TO BE USED FOR BIDDING OR CONSTRUCTION.

CITY OF DALLAS

©2011 Texas Department of Transportation

SANTIAGO CALATRAVA
ARCHITECT & ENGINEER
PARKRING 11 - 8002 ZÜRICH, SUISSE
TEL: (+41) 44 204 5000 FAX: (+41) 44 204 5002

HUITT~ZOLLARS
Huitt-Zollars, Inc. Dallas
1717 McKinney Avenue, Suite 1400
Dallas, Texas 5202-1236

SCALE	TITLE
1/80" = 1'-0	EAST BOUND ALIGNMENT 1
DATE: October 2011	
DRAWN BY: ---- / CHECKED: --	DRAWING NO. EP-10110

REV.	DATE	TITLE
0	23AUG2011	FOR INFORMATION ONLY

NOTES:
ALL COORDINATES ARE RELATIVE TO PROJECT REFERENCE POINT, SEE PLAN P-00006

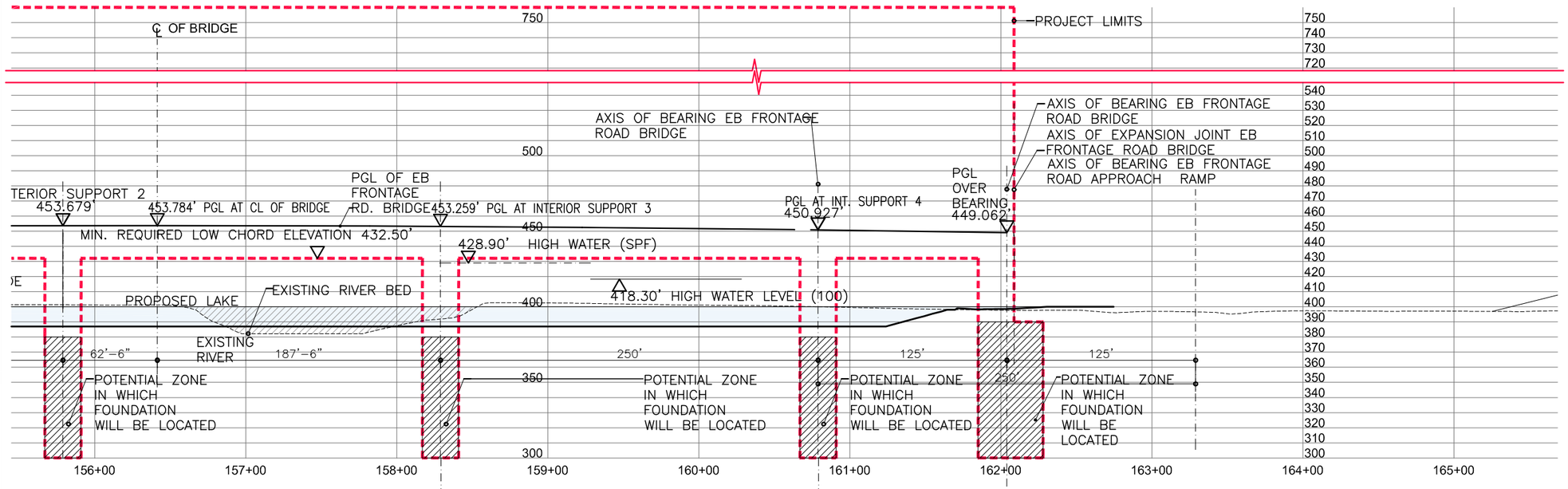

VERTICAL ALIGNMENT

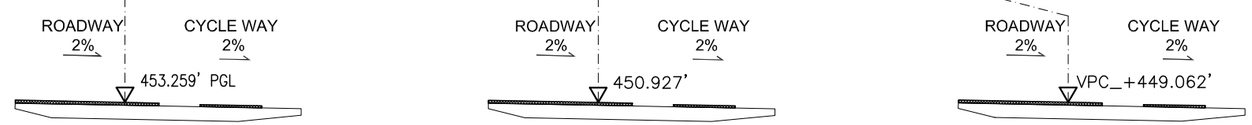

INDICITIVE CROSS SECTIONS
SCALE 1/40"=1'

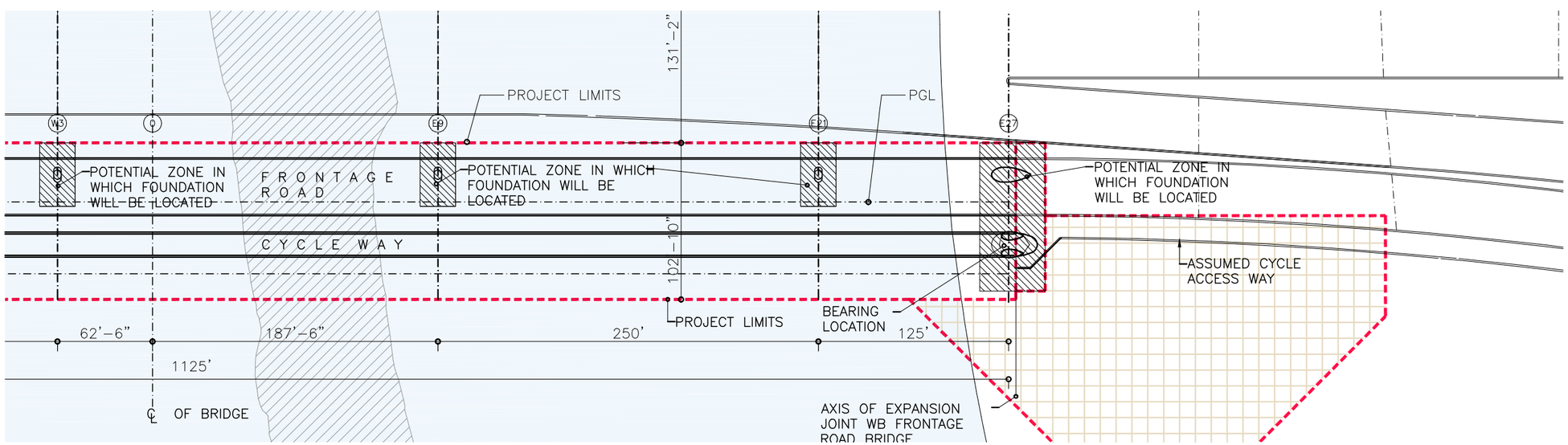

HORIZONTAL ALIGNMENT

FOR INFORMATION ONLY

IH30 FRONTAGE ROAD BRIDGES
DALLAS, TX, USA

50% ENGINEERING

EASTBOUND BRIDGE TRAFFIC PLANS

(C) 2011 SANTIAGO CALATRAVA VALLS. ALL RIGHTS RESERVED.
ALL DRAWINGS ARE FOR DESIGN PURPOSES ONLY. NOT TO BE USED FOR BIDDING OR CONSTRUCTION.

CITY OF DALLAS

Texas Department of Transportation

SANTIAGO CALATRAVA
ARCHITECT & ENGINEER
PARKRING 11 - 8002 ZÜRICH, SUISSE
TEL: (+41) 44 204 5000 FAX: (+41) 44 204 5002

HUITT~ZOLLARS
Huitt-Zollars, Inc. Dallas
1717 McKinney Avenue, Suite 1400
Dallas, Texas 5202-1236

SCALE 1/80" = 1'-0
DATE October 2011
DRAWN BY ----
CHECKED --
TITLE EAST BOUND ALIGNMENT 2
DRAWING NO. EP-10111

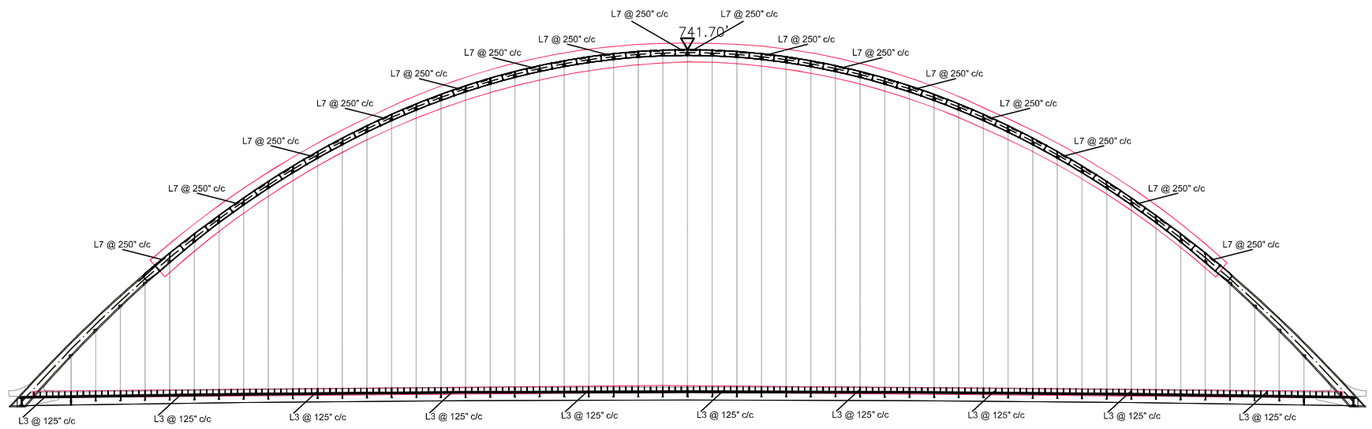

LONG SECTION

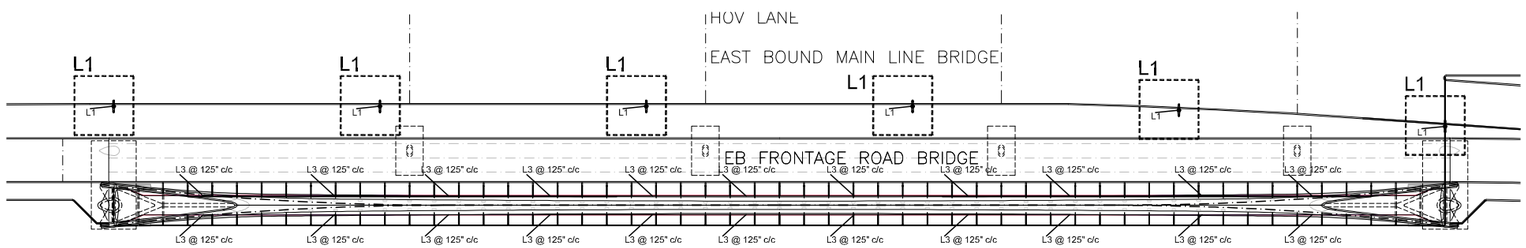

PLAN

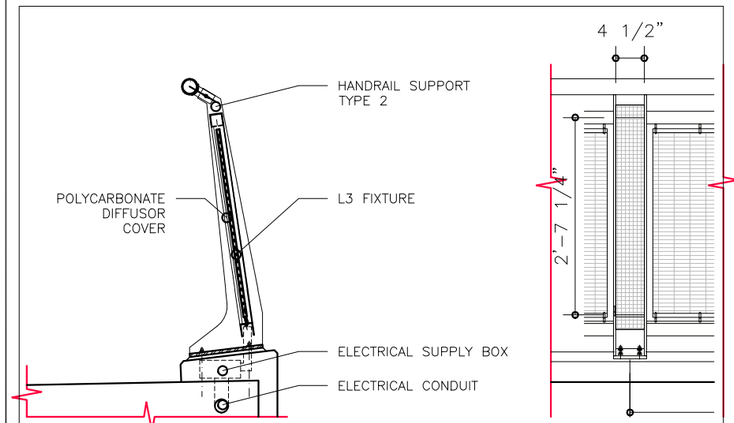

DETAIL LAMP L3 (SCALE $\frac{1}{2}$" = 1' - 0")

ILLUMINATION OF CYCLE WAY

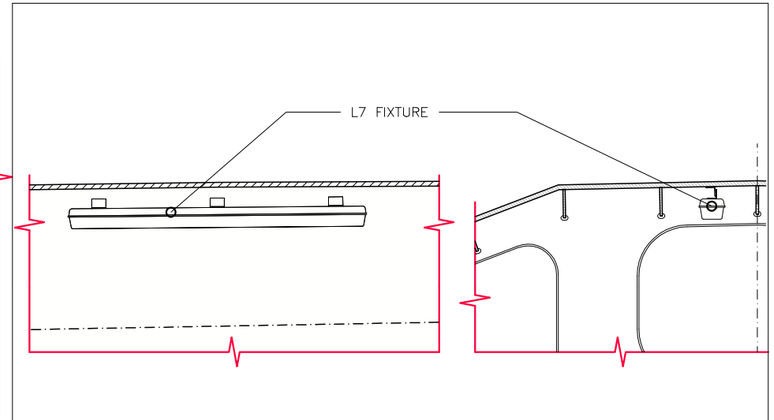

POSITION LAMP L7 (SCALE $\frac{3}{8}$" = 1' - 0")

ILLUMINATION FOR MAINTAINENCE INSIDE TIED ARCH

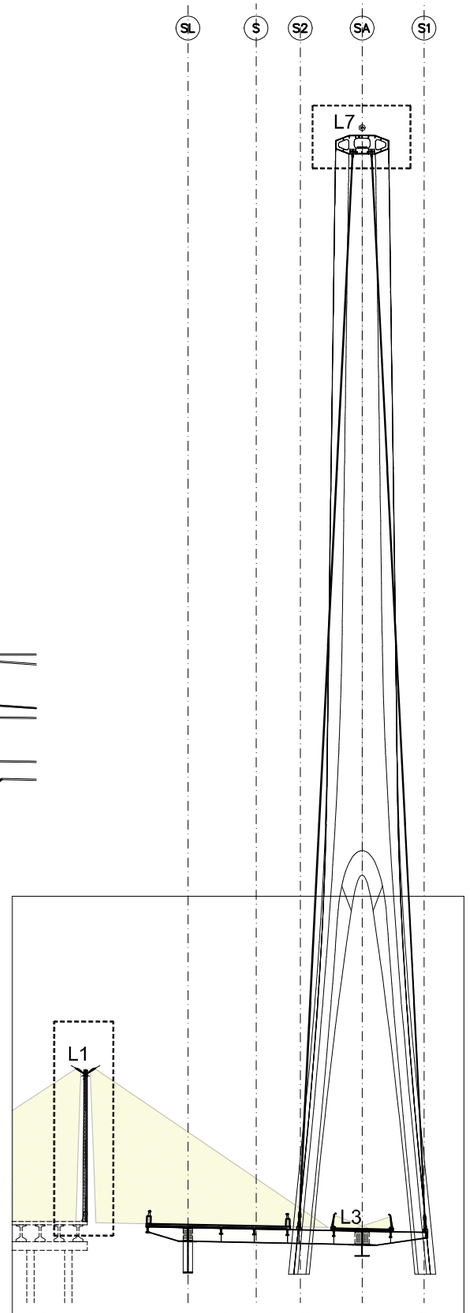

POSITION LAMP L1/L3 (SECTION ON AXIS 0)

ILLUMINATION OF ROAD AND CYCLE DECK

REV.	DATE	TITLE

NOTES:
ALL COORDINATES ARE RELATIVE TO PROJECT REFERENCE POINT, SEE PLAN P-00006

FOR INFORMATION ONLY

ILLUMINATION FIXTURES		
ILLUMINATION CONCEPT	TYPE	UNITS
ILLUMINATION ROAD DECK	L1	6
ILLUMINATION CYCLE- AND WALKWAY	L3	208
MAINTENANCE LIGHTING	L7	52

ILLUMINATION FIXTURES	
TYPE	DESCRIPTION
L1	ATTACHED TO MAIN BRIDGE POLES
L3	LED LINEAR Varlo Led Flex Apollo or Donar
L7	PHILIPS TCW 215 1x18W

IH30 FRONTAGE ROAD BRIDGES
DALLAS, TX, USA

50% ENGINEERING

EASTBOUND BRIDGE ILLUMINATION PLANS

(C) 2011 SANTIAGO CALATRAVA VALLS. ALL RIGHTS RESERVED.
ALL DRAWINGS ARE FOR DESIGN PURPOSES ONLY. NOT TO BE USED FOR BIDDING OR CONSTRUCTION.

CITY OF DALLAS

©2011 Texas Department of Transportation

SANTIAGO CALATRAVA
ARCHITECT & ENGINEER
PARKRING 11 - 8002 ZÜRICH, SUISSE
TEL: (+41) 44 204 5000 FAX: (+41) 44 204 5002

HUITT~ZOLLARS
Huitt-Zollars, Inc. Dallas
1717 McKinney Avenue, Suite 1400
Dallas, Texas 5202-1236

SCALE ----
DATE October 2011
DRAWN BY ---
CHECKED --
TITLE FUNCTIONAL ILLUMINATION OVERVIEW
DRAWING NO. EP-13101

REV.	DATE	TITLE

NOTES:
ALL COORDINATES ARE RELATIVE TO PROJECT REFERENCE POINT, SEE PLAN P-00006

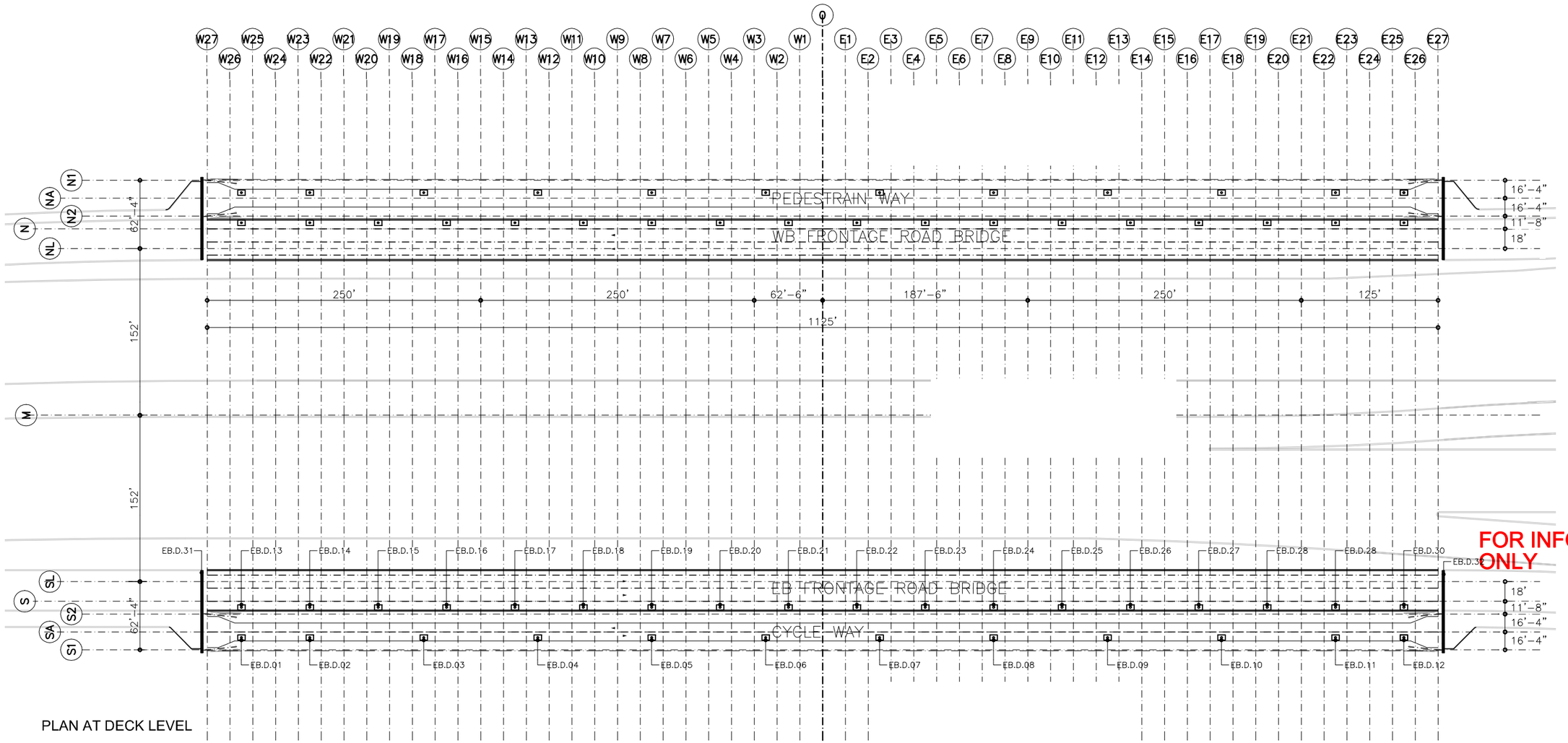

FOR INFORMATION ONLY

PLAN AT DECK LEVEL

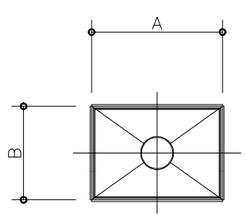

GULLY DIMENSIONS		
TYPE	A	B
TYPE 1	11.75"	11.75"
TYPE 2	24"	8"

PLAN TYPICAL GULLY (TYPE 1 AND 2)

TYPE 1
EB.D.01 TO EB.D.12
12 PIECES
ASTO USF 6110 OR
SIMILAR APPROVED

TYPE 2
EB.D.13 TO EB.D.30
18 PIECES
ASTO USF 6266 OR
SIMILAR APPROVED

TYPE 3
EB.D.31 AND EB.D.32
2 PIECES
HOPPER AND DOWNPIPE
BELOW MOVEMENT
JOINT

NOTE:
GULLIES SHOWN IN THE OVERVIEW PLAN ARE ENLARGED FOR CLARITY, ACTUAL SIZE SEE TABLE AND DETAIL DRAWINGS

IH30 FRONTAGE ROAD BRIDGES
DALLAS, TX, USA

50% ENGINEERING

EASTBOUND BRIDGE DRAINAGE PLANS

(C) 2011 SANTIAGO CALATRAVA VALLS. ALL RIGHTS RESERVED.
ALL DRAWINGS ARE FOR DESIGN PURPOSES ONLY. NOT TO BE USED FOR BIDDING OR CONSTRUCTION.

CITY OF DALLAS

Texas Department of Transportation

SANTIAGO CALATRAVA
ARCHITECT & ENGINEER
PARKRING 11 – 8002 ZÜRICH, SUISSE
TEL: (+41) 44 204 5000 FAX: (+41) 44 204 5002

HUITT~ZOLLARS
Huitt-Zollars, Inc. Dallas
1717 McKinney Avenue, Suite 1400
Dallas, Texas 5202-1236

1"=100'

October 2011

OVERVIEW DRAINAGE

EP-14100