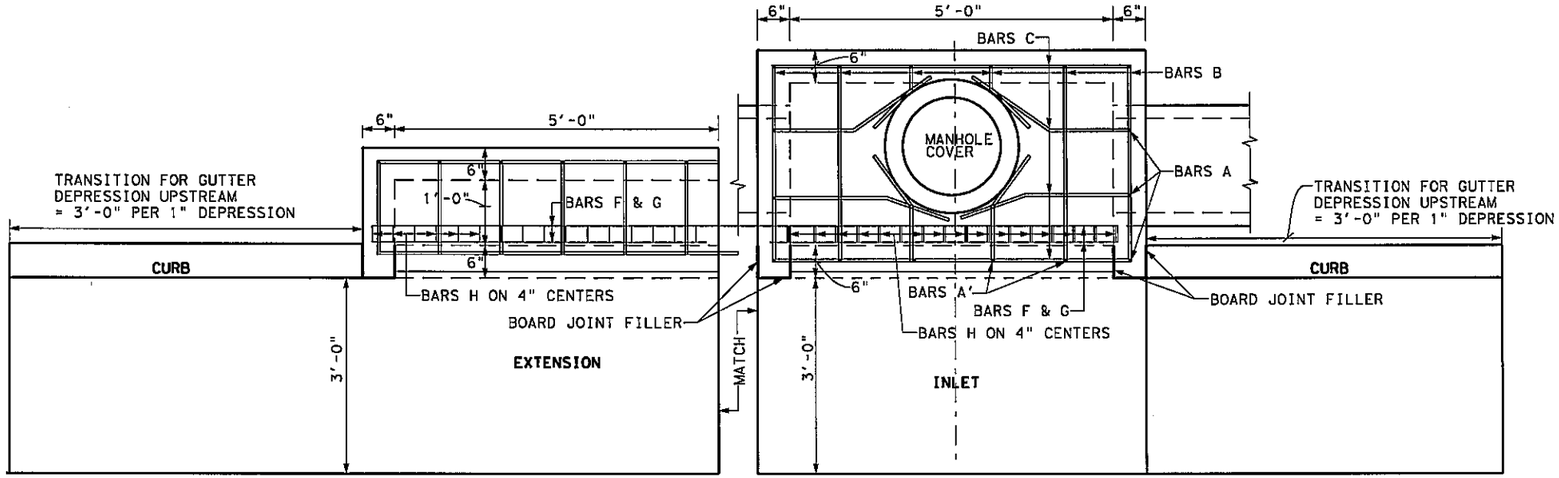

PLAN VIEW

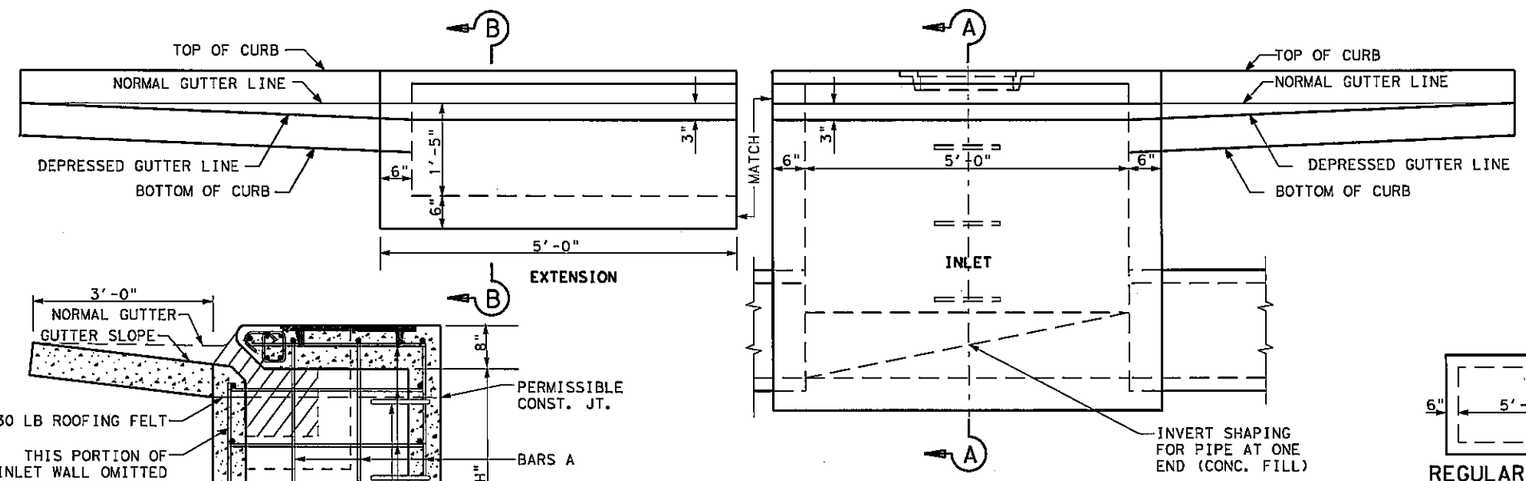

ELEVATION VIEW

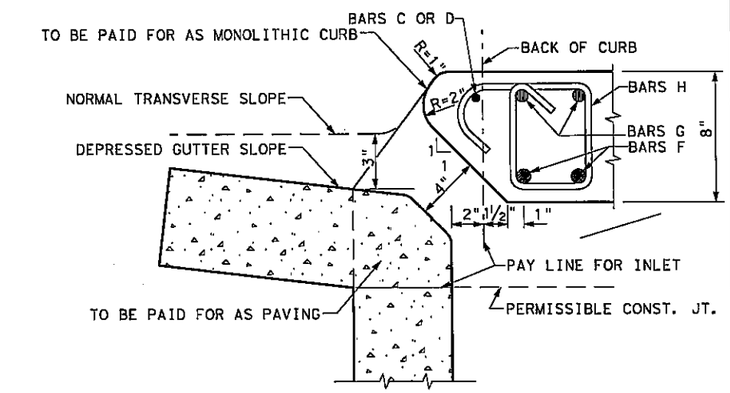

THROAT DETAIL

NOTE: DIMENSIONS FOR CURB SECTIONS VARY ACCORDING TO LIMITS OF PROPOSED CURB TYPES.

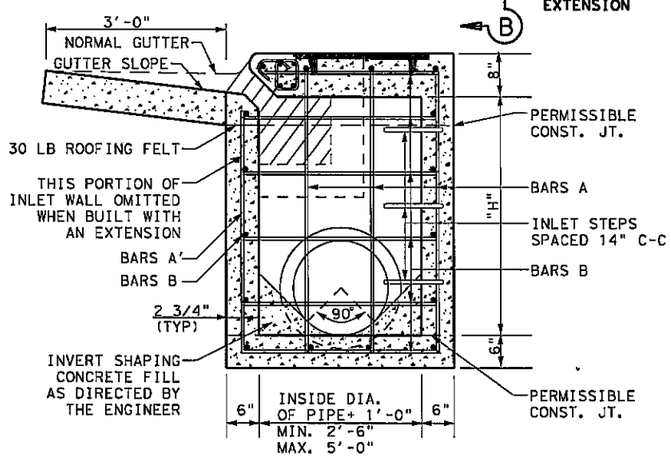

SECTION A-A

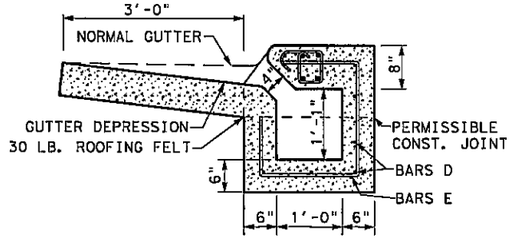

SECTION B-B

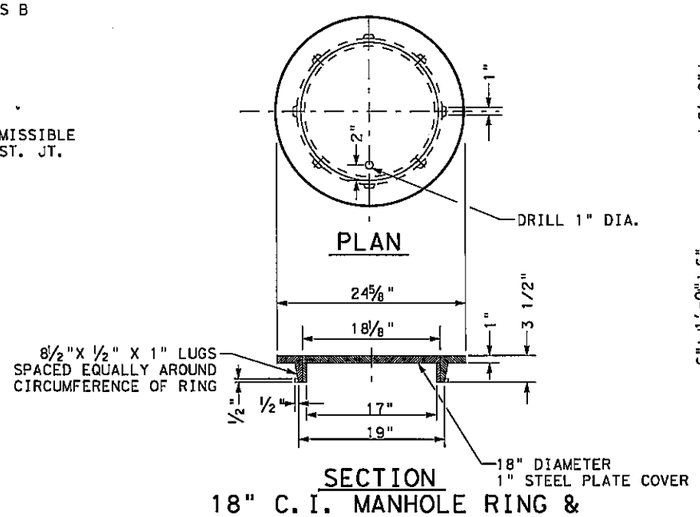

PLAN

SECTION

18" C.I. MANHOLE RING & STEEL PLATE COVER TY. A

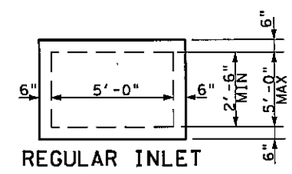

REGULAR INLET

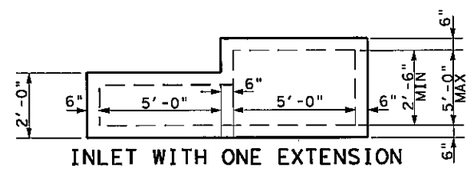

INLET WITH ONE EXTENSION

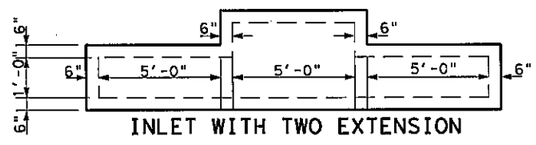

INLET WITH TWO EXTENSION

PLAN OF INLET AND EXTENSIONS

GENERAL NOTES:

1. ALL CONCRETE SHALL BE CLASS A. ALL EXPOSED CORNERS SHALL BE CHAMFERED 3/4".
2. CAST IRON STEPS, SPACED 14" AND LOCATED AS DIRECTED BY THE ENGINEER, SHALL BE PROVIDED AND INSTALLED IN ALL INLETS WHERE THE DEPTH "H" EXCEEDS 4'-0".
3. PAYMENT OF CURB INLETS AND EXTENSIONS THERETO AS SHOWN ON PLANS WILL BE MADE AT THE UNIT PRICE BID FOR "INLET (COMPLETE) (TYPE I)", "INLET EXTENSION".
4. DIMENSIONS RELATING TO REINFORCING STEEL ARE TO CENTERS OF BARS.
5. SEE SHEET NO. 2 OF 2 FOR INLET SUMMARY OF CONCRETE AND REINFORCING STEEL.

SHEET 1 OF 2

REVISED ON 9/10/08

NOT TO SCALE

Texas Department of Transportation
Dallas District

CURB INLET
TYPE I

CI(TY I)-08

FILE: CI(TY I)-08	DN: TxDOT	CK: TxDOT	DW:	CK:
© TxDOT	DISTRICT	FEDERAL AID PROJECT		SHEET
	DAL			
	COUNTY	CONTROL	SECT	JOB	HIGHWAY

DISCLAIMER:
The use of this standard is governed by the "Texas Engineering Practice Act". No warranty of any kind is made by TxDOT for any purpose whatsoever. TxDOT assumes no responsibility for the conversion of this standard to other formats or for incorrect results or damages resulting from its use.

LEVELS DISPLAYED

REINFORCING STEEL AND CONCRETE IN TYPE I - 5FT. INLETS

INLET SIZE		STEEL																												TOTALS	
		BARS A				BARS A'				BARS B				BARS C				BARS F				BARS G				BARS H				Reinf. Steel	CL A Conc
H	W	NO.	SIZE	LENGTH	WEIGHT	NO.	SIZE	LENGTH	WEIGHT	NO.	SIZE	LENGTH	WEIGHT	NO.	SIZE	LENGTH	WEIGHT	NO.	SIZE	LENGTH	WEIGHT	NO.	SIZE	LENGTH	WEIGHT	NO.	SIZE	LENGTH	WEIGHT	LBS	*C.Y.
3.0	2.5	12	4	3'-10"	31	4	4	2'-6"	7	18	4	3'-2"	38	13	4	5'-8"	49	2	7	5'-8"	23	2	6	9'-8"	29	18	3	2'-7"	17	194	1.64
3.5	2.5	12	4	4'-4"	35	4	4	3'-0"	8	18	4	3'-2"	38	13	4	5'-8"	49	2	7	5'-8"	23	2	6	9'-8"	29	18	3	2'-7"	17	199	1.80
4.0	2.5	12	4	4'-10"	39	4	4	3'-6"	9	20	4	3'-2"	42	15	4	5'-8"	57	2	7	5'-8"	23	2	6	9'-8"	29	18	3	2'-7"	17	216	1.96
4.5	2.5	12	4	5'-4"	43	4	4	4'-0"	11	20	4	3'-2"	42	15	4	5'-8"	57	2	7	5'-8"	23	2	6	9'-8"	29	18	3	2'-7"	17	222	2.11
5.0	2.5	12	4	5'-10"	47	4	4	4'-6"	12	22	4	3'-2"	47	17	4	5'-8"	64	2	7	5'-8"	23	2	6	9'-8"	29	18	3	2'-7"	17	239	2.27
5.5	2.5	12	4	6'-4"	51	4	4	5'-0"	13	22	4	3'-2"	47	17	4	5'-8"	64	2	7	5'-8"	23	2	6	9'-8"	29	18	3	2'-7"	17	244	2.42
6.0	2.5	12	4	6'-10"	55	4	4	5'-6"	15	24	4	3'-2"	51	19	4	5'-8"	72	2	7	5'-8"	23	2	6	9'-8"	29	18	3	2'-7"	17	262	2.59
6.5	2.5	12	4	7'-4"	59	4	4	6'-0"	16	24	4	3'-2"	51	19	4	5'-8"	72	2	7	5'-8"	23	2	6	9'-8"	29	18	3	2'-7"	17	267	2.74
8.0	2.5	12	4	8'-10"	71	4	4	7'-6"	20	28	4	3'-2"	59	23	4	5'-8"	87	2	7	5'-8"	23	2	6	9'-8"	29	18	3	2'-7"	17	306	3.22
8.5	2.5	12	4	9'-4"	75	4	4	8'-0"	21	28	4	3'-2"	59	23	4	5'-8"	87	2	7	5'-8"	23	2	6	9'-8"	29	18	3	2'-7"	17	311	3.37
10.0	2.5	12	4	10'-10"	87	4	4	9'-6"	25	32	4	3'-2"	68	27	4	5'-8"	102	2	7	5'-8"	23	2	6	9'-8"	29	18	3	2'-7"	17	351	3.84
10.5	2.5	12	4	11'-4"	91	4	4	10'-0"	27	32	4	3'-2"	68	27	4	5'-8"	102	2	7	5'-8"	23	2	6	9'-8"	29	18	3	2'-7"	17	357	4.00
4.0	3.0	12	4	4'-10"	39	4	4	3'-6"	9	20	4	3'-8"	49	15	4	5'-8"	57	2	7	5'-8"	23	2	6	9'-8"	29	18	3	2'-7"	17	223	2.16
4.5	3.5	14	4	5'-4"	50	4	4	4'-0"	11	20	4	4'-2"	56	17	4	5'-8"	64	2	7	5'-8"	23	2	6	9'-8"	29	18	3	2'-7"	17	250	2.54
5.5	3.5	14	4	6'-4"	59	4	4	5'-0"	13	22	4	4'-2"	61	19	4	5'-8"	72	2	7	5'-8"	23	2	6	9'-8"	29	18	3	2'-7"	17	274	2.89
7.5	4.0	16	4	8'-4"	89	4	4	7'-0"	19	26	4	4'-8"	81	25	4	5'-8"	95	2	7	5'-8"	23	2	6	9'-8"	29	18	3	2'-7"	17	353	3.87
10.0	5.0	18	4	10'-10"	130	4	4	9'-6"	25	32	4	5'-8"	121	33	4	5'-8"	125	2	7	5'-8"	23	2	6	9'-8"	29	18	3	2'-7"	17	470	5.42
7.5	5.0	18	4	8'-4"	100	4	4	7'-0"	19	26	4	5'-8"	96	29	4	5'-8"	110	2	7	5'-8"	23	2	6	9'-8"	29	18	3	2'-7"	17	394	4.09

*Does not include invert shaping

NOTE: On inlets with extensions, Bars F & G shall run continuous the inlet and extensions. Where two or more extensions are together, Bars D shall run continuous the the

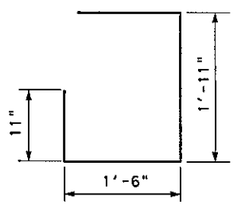

BARS E

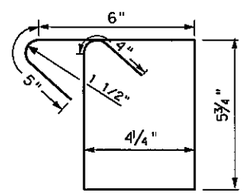

BARS H

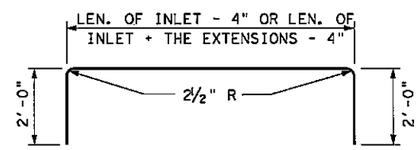

BARS G

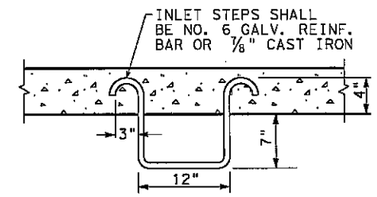

DETAIL OF INLET STEPS

CONCRETE TO BE DEDUCTED FOR PIPES	
Pipe Size	Conc. C.Y.
15"	0.04
18"	0.05
21"	0.07
24"	0.09
27"	0.11
30"	0.14
33"	0.17
36"	0.19
42"	0.26
48"	0.34
54"	0.43

NOTE:

WHERE TWO OR MORE EXTENSIONS ARE TOGETHER, BARS "D" SHALL RUN CONTINUOUS THRU THE EXTENSIONS.
* DOES NOT INCLUDE QUANTITY FOR INVERT SHAPING.

REINFORCING STEEL AND CONCRETE IN EXTENSIONS

5'-0" EXTN. NO.	BARS D				BARS E				BARS F				BARS G				BARS H				Reinf. Steel	CL A Conc.
	NO.	SIZE	LENGTH	WEIGHT	NO.	SIZE	LENGTH	WEIGHT	NO.	SIZE	*LENGT	WEIGHT	NO.	SIZE	*LENGT	WEIGHT	NO.	SIZE	LENGTH	WEIGHT	LBS	C.Y.
1	8	4	5'-8"	30	6	4	5'-4"	21	2	7	5'-6"	23	2	6	5'-6"	17	16	3	2'-7"	6	97	1.64
2	8	4	11'-2"	60	12	4	5'-4"	43	2	7	11'-0"	45	2	6	11'-0"	33	33	3	2'-7"	32	213	1.80
3	Reinf. Steel is as shown for 1 Extension and as shown for 2 Extensions																					

** Length is to be added to the length as shown in the above table for Typ. I - 5'-0" Inlets*

GENERAL NOTES:

REINFORCING STEEL AND CONCRETE TABLRS SHOWN ABOVE ARE FOR INFORMATION ONLY

THESE TABLES ARE TO BE USED WITH INLET TYPE I, WITH 3" & 5" NORMAL CURB HEIGHT AND 8" CONCRETE PAVEMENT.

REVISED ON 9/10/08

NOT TO SCALE

SHEET 2 OF 2

Texas Department of Transportation
Dallas District

CURB INLET
TYPE I

CI(TY I)-08

FILE: CI(TY I)-08	DN: TxDOT	CK: TxDOT	DW:	CK:
© TxDOT	DISTRICT	FEDERAL AID PROJECT		SHEET
	DAL			
	COUNTY	CONTROL / SECT / JOB		HIGHWAY

DISCLAIMER:
The use of this standard is governed by the "Texas Engineering Practice Act". No warranty of any kind is made by TxDOT for any purpose whatsoever. TxDOT assumes no responsibility for the conversion of this standard to other formats or for incorrect results or damages resulting from its use.

LEVELS DISPLAYED