TEXAS

STATE DEPARTMENT OF HIGHWAYS AND PUBLIC TRANSPORTATION

1982 STANDARD SPECIFICATIONS FOR CONSTRUCTION OF HIGHWAYS, STREETS AND BRIDGES

TEXAS

STATE DEPARTMENT OF HIGHWAYS AND PUBLIC TRANSPORTATION

STANDARD SPECIFICATIONS FOR CONSTRUCTION OF HIGHWAYS, STREETS AND BRIDGES

Adopted by the
State Department of Highways
and Public Transportation
September 1, 1982

TABLE OF CONTENTS

PART I, GENERAL PROVISIONS

DIVISION I, General Requirements and Covenants — **Page**

ITEM 1. Definition of Terms 1
2. Instructions to Bidders 6
3. Award and Execution of Contract 9
4. Scope of Work 10
5. Control of the Work 13
6. Control of Materials 17
7. Legal Relations and Responsibilities to the Public . . . 21
8. Prosecution and Progress 28
9. Measurement and Payment 32

PART II, CONSTRUCTION DETAILS

DIVISION I, Earthwork

ITEM 100. Preparing Right of Way 37
102. Clearing and Grubbing 39
104. Removing Old Concrete 41
110. Roadway Excavation 43
120. Channel Excavation 45
130. Borrow 46
131. Borrow (Delivered) 48
132. Embankment 49
140. Overhaul 55
150. Blading 56
152. Road Grader Work 57
154. Scraper Work 58
156. Bulldozer Work 59
158. Excavation Work for Erosion Control 61
160. Furnishing and Placing Topsoil 62
162. Sodding for Erosion Control 64
164. Seeding for Erosion Control 68
166. Fertilizer 74
168. Sprinkle Irrigation 75
169. Soil Retention Blanket 76
170. Obliterating Abandoned Road 79
190. Roadside Planting 80

DIVISION II, Subbase and Base Courses

ITEM 200. Stripping 87
204. Sprinkling 87
210. Rolling (Flat Wheel) 88

TABLE OF CONTENTS - Continued

		Page
211.	Rolling (Tamping)	90
212.	Rolling (Heavy Tamping)	91
213.	Rolling (Pneumatic Tire)	93
214.	Rolling (Heavy Pneumatic)	96
215.	Rolling (Grid)	98
216.	Rolling (Proof)	99
230.	Roadbed Treatment	102
246.	Foundation Course	106
248.	Flexible Base	110
249.	Flexible Base (Delivered)	121
250.	Scarifying and Reshaping Base Courses	132
252.	Salvaging and Replacing Base	134
254.	Scarifying Existing Pavement	138
256.	Salvaging and Stockpiling Base Material	138
260.	Lime Treatment for Materials in Place	140
262.	Lime Treatment for Base Courses	145
264.	Hydrated Lime and Lime Slurry	150
270.	Portland Cement Treatment for Materials in Place	151
272.	Portland Cement Treatment for Base Courses	157
274.	Cement Stabilized Base	163
292.	Asphalt Stabilized Base (Plant Mix)	173

DIVISION III, Surface Courses or Pavement

ITEM 300.	Asphalts, Oils and Emulsions	189
302.	Aggregate for Surface Treatments	196
303.	Aggregate for Surface Treatments (Lightweight)	198
304.	Aggregate for Surface Treatments (Precoated)	199
310.	Prime Coat (Asphaltic Material Only)	207
312.	Prime Coat (Asphaltic Material and Sand)	209
314.	Emulsified Asphalt Treatment	210
316.	Seal Coat	212
320.	One Course Surface Treatment	215
322.	Two Course Surface Treatment	217
324.	Three Course Surface Treatment	220
330.	Cold Mix Limestone Rock Asphalt Pavement (Class A)	223
332.	Cold Mix Limestone Rock Asphalt Pavement (Class B)	235
340.	Hot Mix Asphaltic Concrete Pavement	239
350.	Hot Mix-Cold Laid Asphaltic Concrete Pavement	264
360.	Concrete Pavement (Water Cement Ratio)	290
364.	Concrete Pavement (Class "A" Concrete)	331
366.	Concrete Pavement (Continuously Reinforced)	333
368.	Terminal Anchorage (Concrete Pavement)	336

TABLE OF CONTENTS - Continued

DIVISION IV, Structures **Page**

ITEM 400. Structural Excavation 339
401. Excavation and Backfill for Sewers 349
404. Driving Piling 356
405. Foundation Test Load 365
406. Timber Piling 367
407. Steel Piling 370
408. Metal Shell Piling 374
409. Concrete Piling 377
416. Drilled Shaft Foundations 382
417. Slurry Displacement Drilled Shafts 389
420. Concrete Structures 393
421. Concrete for Structures 421
422. Reinforced Concrete Slab 434
423. Retaining Wall 437
425. Prestressed Concrete Structures 440
426. Prestressing 454
427. Surface Finishes for Concrete 464
428. Concrete Surface Treatment 469
430. Extending Concrete Structures 471
431. Pneumatically Placed Concrete 476
432. Riprap 482
433. Polyurethane Joint Seal 487
434. Sliding Elastomeric Bearings 489
435. Elastomeric Materials 492
436. Preformed Joint Seal 500
437. Concrete Admixtures 503
438. Dense Concrete Overlay 507
439. Concrete Overlay 515
440. Reinforcing Steel 522
441. Steel Structures 529
442. Metal for Structures 553
443. Permanent Metal Deck Forms 561
444. Bridge Protective Assembly 563
446. Cleaning, Paint and Painting 564
447. Structural Bolting 575
448. Structural Welding 584
450. Railing 608
451. Removing and Replacing Railing 612
452. Removing Railing 613
453. Temporary Railing 614
458. Waterproofing 616
459. Railroad Waterproofing 624

TABLE OF CONTENTS - Continued

Page

460. Corrugated Metal Pipe 636
461. Structural Plate Structures 646
462. Concrete Box Culverts 653
463. Long Span Structural Plate Structures 661
464. Reinforced Concrete Pipe Culverts 667
465. Pipe Sewers 679
466. Metal End Section 683
467. Precast End Section 684
468. Flared Concrete Inlet 685
469. Flared Metal Inlet 687
470. Manholes and Inlets 688
471. Frames, Grates, Rings and Covers 692
472. Relaying Culvert Pipe 694
473. Laying Culvert Pipe 695
474. Slotted Drain 696
475. Headwalls, Wingwalls, Inlets and Manholes 698
476. Jacking, Boring or Tunneling Pipe 702
477. Safety End Treatment 705
479. Adjusting Manholes and Inlets 707
480. Cleaning Existing Structures 709
481. PVC Pipe 709
483. Scarifying Concrete Bridge Slab 711
485. Wet Sandblasting 712
492. Timber Preservative and Treatment 713
495. Raising Existing Structure(s) 715
496. Removing Old Structures 717
497. Disposal of Salvageable Material 720
498. Plant Inspection Laboratory 720

DIVISION V. Incidental Construction

ITEM 500. Mobilization 725
502. Barricades, Signs and Traffic Handling 725
504. Structure for Field Office and Laboratory 727
506. Temporary Erosion, Sediment and Water Pollution Control 728
508. Constructing Detours 732
510. One-Way Traffic Control 733
512. Portable Concrete Traffic Barrier 734
514. Concrete Traffic Barrier 736
516. Vehicular Impact Attenuator Assembly (Steel Barrel) 738

TABLE OF CONTENTS - Continued

Page

518. Vehicular Impact Attenuator Assembly (Sand-Filled Plastic Barrels) 740
520. Weighing and Measuring Equipment 742
522. Ready-Mix Plants 752
524. Hydraulic Cement 758
526. Membrane Curing 759
528. Automatic Screed Controls for Asphaltic-Concrete Spreading and Finishing Machine 762
530. Concrete Curb, Gutter, Curb and Gutter, Sidewalks and Driveways 763
532. Concrete Retards 766
534. Concrete for Structure Approach Slabs 767
536. Concrete Medians and Directional Islands 768
538. Right of Way Markers 770
540. Metal Beam Guard Fence 771
542. Removing Metal Beam Guard Fence 776
544. Removing Timber Post Guard Fence 777
550. Chain Link Barrier Fence 778
552. Wire Fence 783
556. Pipe Underdrains 786
575. Epoxy 792
576. Excavation and Form Work 795
578. Drinking Fountain 798
580. Arbor Unit 798
582. Water Mains and Drains 804
584. Septic System 809
588. Recreational Vehicle Sanitary Unit 811
590. Chain Link Security Fence 812

DIVISION VI, Lighting and Signing

ITEM 610. Roadway Illumination Assemblies 819
612. Relocation Roadway Illumination Assemblies 820
613. High Mast Illumination Poles 822
614. High Mast Illumination Assemblies 823
616. Roadway Illumination Assembly Foundations 825
618. Conduit 826
620. Electrical Conductor 827
622. Duct Cable 828
624. Ground Box 830
626. Circuit Protector Assembly 831

TABLE OF CONTENTS - Continued

Page

628. Service Poles 831
630. Transformer Stations 832
632. Installation of Highway Traffic Signals 833
634. Plywood Signs (Type A) 837
636. Aluminum Signs (Type A) 841
638. Aluminum Railroad Crossbuck Sign Panel Assembly 843
640. Plywood Signs (Type O) 845
642. Aluminum Signs (Type O) 848
644. Conformable Sheeting Reflectorized Signs 851
646. Roadside Traffic Sign Supports (Steel Pipe) 853
648. Roadside Traffic Sign Supports (Structural Steel) 855
650. Overhead Sign Supports 857
652. Highway Sign Lighting Fixtures 860
654. Sign Walkway 860
656. Foundation for Traffic Signs 861
658. Delineators and Object Markers 863
660. Winged Channel Posts 864
662. Construction Pavement Markings 865
664. Abbreviated Pavement Markings 867
666. Thermoplastic Pavement Markings 868
668. Retroreflective Prefabricated Pavement Markings . . . 873
670. Pavement Marking (Reflectorized Paint) 875
672. Jiggle Bar Tile 878
674. Pavement Markers (Reflectorized) 880
676. Traffic Button 881
678. Blast Cleaning 883

PART III, Forms

DIVISION I, Documentary Forms

Notice to Contractors of Proposed Texas Highway Construction 885
Contractors' Notice of Texas Highway Construction 886
Proposal to The State Department of Highways and Public Transportation Commission 889
Bid Tabulation Form (Computer Printout) 893
Contract 894
Performance Bond 897
Payment Bond 899

PART I, GENERAL PROVISIONS

DIVISION I
GENERAL REQUIREMENTS AND COVENANTS

ITEM 1

DEFINITION OF TERMS

1.1. **Definitions.** Wherever in these specifications or in other contract documents, the following terms or pronouns in place of them are used, the intent and meaning shall be interpreted as follows:

1.2. **State.** The State of Texas, Party of the First Part.

1.3. **Commission.** The Texas State Department of Highways and Public Transportation Commission.

1.4. **Department.** The Texas State Department of Highways and Public Transportation (SDHPT).

1.5. **County.** A political subdivision of the State.

1.6. **Engineer.** The Engineer-Director of the Department or his authorized representatives.

1.7. **Inspector.** The authorized representative of the Engineer assigned to supervise and inspect any or all parts of the work and the materials to be used therein.

1.8. **Bidder.** An individual, firm or corporation or any combination thereof submitting a proposal.

1.9. **Contractor.** The individual, firm or corporation or any combination thereof, Party of the Second Part, with which the contract is made by the State.

1.10. **Superintendent.** The representative of the Contractor authorized to receive and fulfill instructions from the Engineer, and who shall supervise and direct the construction.

1.11. **Surety.** The corporate body or bodies bound with and for the Contractor for the faithful performance of the work covered by the contract and for the payment for all labor and material supplied in the prosecution of the work.

1.12. **Laboratory.** The testing laboratories of the Department or any other testing laboratory that may be designated or approved by the Engineer.

1.13. **Proposal.** The offer of the bidder, made out on the prescribed form, giving unit prices for performing the work described in the plans and specifications.

1.14. **Proposal Guaranty.** The security designated in the proposal and furnished by the bidder as a guaranty that the bidder will enter into a contract if awarded the work.

1.15. **SDHPT Bulletin C-5.** Manual of procedures and requirements for manual welding and submerged arc welding for the fabrication of structural steel.

1.16. **SDHPT Bulletin C-6.** Manual of testing requirements for the qualification of welders for structural and reinforcing steel.

1.17. **SDHPT Bulletin C-8.** Manual of procedures for driving and test loading piling.

1.18. **SDHPT Bulletin C-9.** Manual of procedures for constructing and test loading drill shafts.

1.19. **SDHPT Bulletin C-11.** Manual of procedures to be followed in the design and control of Portland cement concrete mixes for pavements.

1.20. **SDHPT Supplement to Bulletin C-11.** Manual of procedures to be followed in the design and control of Portland cement concrete mixes for structures.

1.21. **Texas SDHPT Bulletin C-14.** Manual of Procedures to be followed in the design and control of asphaltic concrete paving mixtures.

1.22. **TMUTCD.** Texas Manual on Uniform Traffic Control Devices for Streets and Highways.

1.23. **Manual of Testing Procedures.** Texas State Department of Highways and Public Transportation Materials and Tests Division manual outlining testing methods and procedures.

1.24. **Plans.** The drawings approved by the Engineer, or true reproductions thereof, which show the location, character, dimensions, and details of the work and which are a part of the contract.

1.25. **Specifications.** The directions, provisions and requirements contained herein or in special specifications, supplemented by such special provisions as may be issued or made pertaining to the method and manner of performing the work or to quantities and qualities of materials to be furnished under the contract. Where the phrases "or directed by the Engineer", "ordered by the Engineer," or "to the satisfaction of the Engineer" occur, it is to be understood that the directions, orders, or instructions to which they relate are within the limitations of, and authorized by the contract. Special provisions and special specifications will cover work

pertaining to a particular project and included in the proposal but not covered by the Standard Specifications. Where reference is made to specifications of ASTM, AASHTO or Bulletins and Manuals of the Department it shall be construed to mean the latest standard or tentative standard in effect on the date of the proposal.

1.26. **Supplemental Agreements.** Written agreements entered into between the Contractor and the State and approved by the Surety, covering alterations and changes in plans which are necessary to the proper completion of the work.

1.27. **Contract.** The agreement between the State and the Contractor covering the furnishing of materials and performance of the work. The contract will include the Plans, Standard Specifications, Special Provisions, Special Specifications, Contract Bonds and Supplemental Agreements.

1.28. **Performance Bond.** The security furnished by the Contractor to guarantee the completion of the work in accordance with the terms of the contract.

1.29. **Payment Bond.** The security furnished by the Contractor solely for the protection of claimants, as defined by law, supplying labor and materials for the prosecution of the work in accordance with the terms of the contract.

1.30. **Right of Way.** The land provided for a highway.

1.31. **Roadway.** The portion of the highway within the limits of construction.

1.32. **Roadbed.** The graded portion of the roadway between the intersection of top and side slopes upon which the base course, surface course, shoulders and median are constructed.

1.33. **Subgrade.** That portion of the roadbed upon which the subbase, base, or pavement structure is to be placed.

1.34. **Bridges.** Structures of over 20-foot span measured from face to face of abutments, or in case of copings, from face to face of copings, and multiple span structures of over 20-foot length, measured between inside of end walls along the centerline of the roadbed.

1.35. **Temporary Structures.** All temporary bridges and structures required to maintain traffic during the construction of the work.

1.36. **Substructure.** That part of the structure below the bridge seats or below the springing lines of arches. Parapets, back walls and wing walls of abutments shall be considered as parts of the substructure.

1.37. **Superstructure.** That part of the structure above the bridge seats or above the springing lines of arches.

1.38. **The Work.** The work shall include the furnishing of all labor, materials, equipment, and other incidentals necessary or convenient to the successful completion of the project and the carrying out of all the duties and obligations imposed by the contract.

1.39. **Project.** The specific section or sections of the highway together with all appurtenances and construction to be performed thereon under the contract.

1.40. **Working Day.** A working day is defined as a calendar day, not including Saturdays, Sundays, or legal holidays authorized in the list prepared by the Department for contract purposes, in which weather or other conditions not under the control of the Contractor will permit the performance of the principal unit of work underway for a continuous period of not less than 7 hours between 7 a.m. and 6 p.m. For every Saturday or legal holiday except the following holidays:

> January 1st, the last Monday in May, July 4th, the first Monday in September, the fourth Thursday in November and December 25th

on which the Contractor chooses to work, one day will be charged against the contract working time when weather conditions will permit 7 hours of work as delineated above. The principal unit of work shall be that unit which controls the completion time of the contract. Nothing in this item shall be construed as prohibiting the Contractor from working on Saturdays or legal holidays, except the six listed above, if he so desires. Work on Sunday and on the six legal holidays listed above will not be permitted except in cases of extreme emergency and then only with the written permission of the Engineer. If Sunday work or work on the six legal holidays listed above is permitted, working time will be charged on the same basis as week days.

The Engineer may suspend the work and the "Time Charge", in accordance with Article 8.4., "Temporary Suspension of Work" of Standard Specification Item 8, "Prosecution and Progress", on the day preceding or following one of the listed holidays if the Engineer and the Contractor mutually agree the Contractor should not work. Such suspension shall be based upon past experience as to the volume of holiday traffic that may be expected and the hazard to the travelling public and/or Contractor's employees that project operations would present.

1.41. **ASTM.** American Society for Testing Materials.

1.42. **AASHTO.** American Association of State Highway and Transportation Officials.

1.43. **ANSI.** American National Standards Institute.

1.44. **API.** American Petroleum Institute.

1.45. **AWS.** American Welding Society.

1.46. **NEMA.** National Electrical Manufacturers Association.

1.47. **IES.** Illuminating Engineering Society.

1.48. **UL.** Underwriters Laboratory, Inc.

1.49. **AAN.** American Association of Nurserymen.

1.50. **AWG.** American Wire Gage.

1.51. **IMSA.** International Municipal Signal Association.

1.52. **ITE.** Institute of Transportation Engineers.

1.53. **NBFU.** National Board of Fire Underwriters.

1.54. **NEC.** National Electrical Code (Published by NBFU).

1.55. **AWPA.** American Wood Preservers Association.

1.56. **DFPA.** Douglas Fir Plywood Association.

1.57. **NFPA.** National Forest Products Association.

1.58. **WWPA.** Western Wood Products Association.

1.59. **SPIB.** Southern Pine Inspection Bureau.

1.60. **SFPA.** Southern Forest Products Association.

1.61. **AITC.** American Institute of Timber Construction.

1.62. **AREA.** American Railroad Engineers Association.

1.63. **AWPB.** American Wood Preservers Bureau.

1.64. **AWPI.** American Wood Preservers Institute.

1.65. **Screens and Sieves.** As defined by the ASTM.

1.66. **Highway, Street or Road.** A general term denoting a public way for purposes of vehicular travel, including the entire area within the right of way. Recommended usage in urban areas-highway or street; in rural areas-highway or road.

1.67. **Arterial Highway.** A general term denoting a highway primarily for through traffic, usually on a continuous route.

1.68. **Controlled Access Highway.** Any designated State Highway within or outside the limits of any incorporated city, town, or village, whether under the General Laws or by Special Charter, including Home Rule Charter cities, to or from which access is denied or controlled, in whole or in part, from or to abutting land or intersecting streets, roads, highways, alleys or other public or private ways.

1.69. **Control of Access.** The condition where the right of owners or occupants of abutting land or other persons to access, light, air or view in connection with a highway is fully or partially controlled by public authority.

(1) **Full Control.** Full control of access means that the authority to control access is exercised to give preference to through traffic by providing access connections with selected public roads only and by prohibiting crossings at grade or direct private driveway connections.

(2) **Partial Control.** Partial control of access means that the authority to control access is exercised to give preference to through traffic to a degree that, in addition to access connections with selected public roads, there may be some crossings at grade and some private driveway connections.

1.70. **Expressway.** A divided arterial highway for through traffic with full or partial control of access and generally with grade separations at intersections.

1.71. **Freeway.** An expressway with full control of access.

1.72. **Major Street or Major Highway.** An arterial highway with intersections at grade and direct access to abutting property, and on which geometric design and traffic control measures are used to expedite the safe movement of through traffic.

1.73. **Through Street or Through Highway.** Every highway or portion thereof at the entrance to which vehicular traffic from intersecting highways is required by law to stop before entering or crossing the same and when stop signs are erected.

1.74. **Local Street or Local Road.** A street or road primarily for access to residence, business or other abutting property.

1.75. **Certificate of Insurance.** State Department of Highways and Public Transportation approved form covering standard insurance requirements.

ITEM 2

INSTRUCTIONS TO BIDDERS

2.1 **Contents of Proposal Forms.** Upon request, bidders will be furnished with a proposal form which will state the location and description of the proposed work, an approximate estimate of the various quantities and kinds of work to be performed or materials to be furnished, a schedule of items for which unit prices are asked, and the time within which the work is to be completed. The special provisions and special specifications will be bound in the proposal form.

2.2. **Interpretation of Estimates of Quantities.** The quantities listed in the proposal form will be considered as approximate and will be used for the comparison of bids. Payments will be made to the Contractor in accordance with Items 4 and 9.

2.3. **Examination of Plans, Specifications, Special Provisions and Site of Work.** Before submitting a bid, the bidder shall examine carefully the proposal, plans, specifications, special provisions, and the form of contract to be entered into for the work contemplated. He shall examine the site of work and satisfy himself as to the conditions which will be encountered relating to the character, quality, and quantity of work to be performed and materials to be furnished. The submission of a bid by bidder shall be conclusive evidence that he has complied with these requirements.

The borings, profile, and water elevations shown on the plans were obtained for use of the Department in the preparation of plans, and the bidder is hereby cautioned that the Department assumes no responsibility for the accuracy of these data. The bidder, in preparing his proposal, shall take cognizance of the difficulty of accurately classifying all material encountered in making foundation investigations, the possible erosion of stream channels and banks after survey data have been obtained, and the unreliability of water elevations other than for the date recorded.

Claims for additional compensation due to variations between conditions actually encountered in construction and as indicated by the plans will not be allowed.

2.4. **Competency of Bidders.** The bidder must be capable of performing each of the various items of work bid upon. A proposal form for bidding will not be issued unless the bidder shall have filed with Department, at least 15 days prior to the date upon which bids are to be submitted, complete statement of his financial resources and of his experience on similar work. Each bidder shall furnish, also, a statement listing the equipment available for the work being bid upon and such other information as may be called for on forms furnished by the Department.

2.5. **Preparation of Proposal.** The bidder shall submit his proposal on the form furnished to him by the Department. The blank spaces for each item as required in the proposal shall be filled in by writing in words in ink. The bidder shall submit a unit price for each item for which a bid is requested, except in case of an alternate. In such case, prices must be submitted for the base bid or with the items of one or more of the alternates. The proposal shall be executed with ink in the complete and correct name of the individual, firm, corporation, or combination thereof making the proposal and be signed by the person or persons authorized to bind the individual, firm, corporation or combination thereof.

2.6. Rejection of Proposals Containing Alterations, Erasures or Irregularities. Proposals may be rejected if they show any alteration of words or figures, additions not called for, conditional or uncalled for alternate bids, incomplete bids, any alteration of words or figures or erasures not initialed by the person or persons signing the proposal, or irregularities of any kind.

2.7. Proposal Guaranty. The proposal shall be accompanied by a Proposal Guaranty of the character and in the amount as indicated in the proposal and described under the Item, "Definition of Terms".

2.8. Delivery of Proposal. Each completed proposal shall be placed, together with the Proposal Guaranty, in a sealed envelope so marked as to indicate its contents. When submitted by mail, this envelope shall be placed in another envelope which shall also be sealed and addressed as indicated in the Notice to Contractors. Proposals will be received on or before the hour and date set for the opening thereof and must be in the hands of the official indicated by that time.

2.9. Revision of Proposal. A bidder may change a bid price entered in a proposal before it is submitted by changing the price and initialing the revision with ink. In cases where the proposal has been submitted, a bidder may change a bid price in his proposal provided his request to do so is submitted in writing and is in the hands of the Engineer prior to the time set for the opening of proposals. A request by telephone or telegraph for a change in a unit bid price will not be considered.

2.10. Withdrawal of Proposal. A bidder may withdraw his proposal provided his request in writing to do so is in the hands of the official indicated in the Notice to Contractors by the time set for opening of proposals. A request by telephone or telegraph for withdrawal of a proposal will not be considered.

2.11. Public Opening of Proposals. Proposals will be opened and read publicly at the time and place indicated in the Notice to Contractors.

2.12. Disqualification of Bidder. More than one proposal involving an individual, firm or corporation, or any combination thereof under the same or different names will not be considered. Reasonable grounds for believing that any bidder is interested in more than one proposal for the work contemplated will be cause for the rejection of all proposals in which such bidder is interested. Any or all proposals will be rejected if there is reason for believing that collusion exists among the bidders, and all participants in such collusion will not be considered in future proposals for the same work. Proposals in which the prices are obviously unbalanced may be rejected. Contracts will be awarded only to responsible bidders.

ITEM 3

AWARD AND EXECUTION OF CONTRACT

3.1. **Consideration of Bids.** For the purpose of award, after the proposals are opened and read, the summation of the products of the approximate quantities shown in the proposal and the unit prices bid will be considered the amount of the bid. The summations will then be compared and the results made available to the public. Until the award of the contract is made, the State reserves the right to reject any or all proposals and to waive such technicalities as may be considered for the best interest of the State.

In determining the amount of the bid as well as computing the amount due for payment of each item under the contract, the State reserves the right to round off all unit bids involving fractional parts of a cent to the nearest one-tenth cent regardless of the fraction involved. Also a unit bid of less than one-tenth of a cent will be considered as one-tenth of a cent.

3.2. **Award of Contract.** The award of the contract, if it be awarded, will be to the lowest reasonable bidder. The award, if made, will be within 30 days after the opening of the proposal.

3.3. **Return of Proposal Guaranty.** The proposal guaranty of the three lowest bidders may be retained until after the contract has been awarded, executed, and bonds made. Proposal guaranty of all except the three lowest bidders will be returned within 72 hours after the bids are opened.

3.4. **Execution of Contract, Bonds and Certificate of Insurance.** Within 15 days after written notification of award of the contract, the bidder shall execute and furnish to the Commission the contract, with (1) a performance bond and a payment bond each in the full amount of the contract price, executed by a surety company or surety companies authorized to execute surety bonds under and in accordance with the laws of the State of Texas, and (2) the Certificate of Insurance showing coverages in accordance with contract requirements.

The performance bond and payment bond are to be furnished as a guarantee of the faithful performance of the work and for the protection of the claimants for labor and materials as outlined in the Item, "Definition of Terms".

When the amount of the contract is $25,000 or less, a performance bond and a payment bond will not be required.

3.5. **Execution and Approval of Contract.** The contract will be approved and signed under authority of the Commission.

3.6. **Failure to Execute Contract, Bonds and Certificate of Insurance.** Should the bidder to whom the contract is awarded refuse or neglect to execute and file the contract, bonds and Certificate of Insurance within 15 days after written notification of the award of the contract, the proposal guaranty filed with the bid shall become the property of the State, not as a penalty, but as liquidated damages. A bidder who forfeits his proposal guaranty in accordance with Article 3.6., "Failure to Execute Contract and Bonds", will not be considered in future proposals for the same work unless there has been a substantial change in the design of the project subsequent to the forfeiture of the proposal guaranty.

3.7. **Beginning of Work.** The Contractor shall not begin work until authorized by the Engineer in writing to do so.

3.8. **Antitrust.** The successful bidder, by virtue of signing the contract, assigns to the State any and all claims for overcharges associated with the contract which arise under the antitrust laws of the United States, 15 U.S.C.A., Section 1, et seq. (1973).

ITEM 4

SCOPE OF WORK

4.1. **Intent of Plans and Specifications.** It is the intent of the plans and specifications to describe a completed work to be performed under the contract. Unless otherwise provided, the Contractor shall furnish all materials, supplies, tools, equipment and labor necessary for the proper prosecution and completion of the work.

4.2. **Special Work.** Any construction or requirements not covered by the plans or by these specifications will be covered by special specifications or special provisions which will be included in the proposal. Such special specifications and special provisions will be considered as a part of the contract, the same as though contained fully herein.

4.3. **Changes and Alterations.** The Engineer will have the right to make changes and alterations in the plans as may be considered necessary or desirable. Such changes and alterations shall not be considered as a waiver of any condition of the contract, nor shall they invalidate any of the provisions thereof. The Contractor shall perform the work as changed or altered.

Necessary work resulting in a substantial change in the character of the work shall be, upon demand of either party to the contract, considered as "Extra Work". Changes made for the convenience of the Contractor shall not be considered as "Extra Work".

Substantial change in the character of the work is defined as:

(a) A required change in design or specifications which materially affects the unit cost of an item, or

(b) A required change in the plans which requires the Contractor to repeat work previously completed, or

(c) A required change in the construction methods for a contract item which significantly increases or decreases the amount of equipment, labor or subordinate materials required to complete the item of work.

Increases or decreases in the quantity of work or materials to be furnished under an item in the contract and placed in accordance with the contract specifications and plan requirements will not be considered as a change in the character of the work but will be considered under Article 4.5.

4.4. **Extra Work.** Work made necessary by changes and alteration of the plans or for other reasons for which no prices are provided in the contract shall be defined as "Extra Work" and shall be performed by the Contractor in accordance with appropriate specifications and as directed; provided, however, that before any extra work is begun, a "Supplemental Agreement" shall be executed or a written order issued by the Engineer to do the work on a "Force Account" basis, as hereinafter provided, under the Item, "Measurement and Payment".

4.5. **Increases and Decreases in Quantity of Work.** The Engineer will have the right to increase or decrease the quantities of the work, as may be considered necessary or desirable. Such increases or decreases shall not be considered as a waiver of any condition of the contract, nor shall they invalidate any of the provisions thereof. The Contractor shall perform the work as increased or decreased. Payment to the Contractor for contract items will be made for the actual quantities of work done or material furnished at the unit prices set forth in the contract, except as provided in specification items requiring plan quantity payment, except as provided for changes in the character of the work and except as provided for overruns and underruns of major items.

A major item is defined as any individual bid item included in the proposal that has a total cost equal to or greater than 5 percent of the original contract or $100,000.00, whichever is less.

When the quantity of work to be done or the quantity of material to be furnished under any major item of the contract is more than 120 percent of the quantity stated in the proposal, then either party to the contract, upon demand, shall be entitled to revised consideration on that portion of work above 120 percent of the quantity stated in the proposal.

When the final quantity of work done under any major item of the contract is less than 80 percent of the quantity stated in the proposal, the adjusted unit price to apply to the final quantity of work performed under the item will be determined by multiplying the unit bid price by the factor obtained from Table I. In no instance shall the product of the adjusted price and the final quantity of work exceed the product of the original contract unit price and 80 percent of the original contract quantity, and in no instance will the unit price be adjusted to more than 125 percent of the original contract unit price.

TABLE I

%Decrease	Factor	%Decrease	Factor
20-24	1.01	60	1.13
25-28	1.02	61	1.14
29-32	1.03	62	1.15
33-35	1.04	63	1.16
36-38	1.05	64	1.17
39-41	1.06	65	1.18
42-44	1.07	66	1.19
45-47	1.08	67	1.20
48-50	1.09	68	1.21
51-53	1.10	69	1.22
54-56	1.11	70	1.23
57-59	1.12	71	1.24
		72 and over	1.25

4.6. **Maintenance of Detours.** The Contractor shall do such work as may be necessary to provide and maintain detours and facilities for safe public travel in accordance with the Traffic Control Plan and these specifications. There shall be provided and maintained in passable condition, as specified under Articles 7.7 and 7.8, such temporary roads and structures as may be necessary to accommodate public travel. Temporary approaches and crossings of intersecting highways shall be provided and maintained in a safe and passable condition by the Contractor at his entire expense.

4.7. **Removal and Disposal of Structures and Obstructions.** All fences, buildings, and structures of any character not necessary to the construction of the work or other obstructions upon or within the limits of the right of way shall be removed by the Contractor and disposed of as directed. Unless otherwise provided in the contract, the removal and disposal of such structures and obstructions shall be performed by the Contractor at his own expense and shall be considered incidental to other items of the contract.

4.8. Rights In and Use of Materials Found on the Right of Way. The Contractor, with the approval of the Engineer, may use in the work any suitable stone, gravel, or sand found in the "Excavation" and will be paid for the excavation of such materials at the contract price bid. He shall, however, at his own expense replace with other suitable materials the materials so removed and which were intended for use in embankments, backfills, approaches, or elsewhere. No charge for materials so used will be made against the Contractor. The Contractor shall not excavate nor remove any material from within the highway which is not within the excavation, as indicated by the slope and grade lines, without written authorization from the Engineer.

4.9. Final Cleaning Up. Upon completion of the work and before acceptance and final payment is made, the Contractor shall clean, remove rubbish and temporary structures from the highway, restore in an acceptable manner all property which has been damaged during the prosecution of the work, and leave the site of the work in a neat and presentable condition throughout.

Upon the completion of any structure, all excess materials, cofferdams, construction buildings, temporary structures, and debris resulting from construction shall be removed. Where work is in a stream, all debris shall be removed to the ground line of the bed of the stream, and the stream channels, structure, and highway left unobstructed and in a neat and presentable condition. Materials cleared from the highway and deposited on property adjacent thereto will not be considered as a satisfactory method of disposal, unless approved by the Engineer. No direct payment will be made for this work, its cost being included in the unit prices bid.

ITEM 5

CONTROL OF THE WORK

5.1. Authority of Engineer. The work will be observed, tested and inspected by the Engineer, and performed to his satisfaction, in accordance with the contract, plans and specifications. The Engineer will decide all questions which may arise as to the quality or acceptability of materials furnished and work performed; the manner of performance and rate of progress of the work; the interpretations of the plans and specifications; and the acceptable fulfillment of the contract on the part of the Contractor. His decisions will be final, and he will have executive authority to enforce and make effective such decisions and orders as the Contractor fails to carry out promptly.

5.2. Engineer as Referee. The Engineer will act as referee in all questions arising under the terms of the contract between the parties thereto, and his decisions shall be final and binding.

5.3. **Plans.** The plans will show in detail the work to be accomplished under the contract. When supplementary bridge plans, shop drawings, shop details, erection drawings, working drawings or other drawings are required, they shall be furnished by the Contractor, and approved by the Engineer prior to the beginning of the work involved. These drawings shall be in standard English units and shall be in the English language. Authorized alterations will be approved by endorsement on the plans or shown on supplementary sheets. The approval by the Engineer of the Contractor's working drawings will not relieve the Contractor of any responsibility under the contract.

It is the responsibility of the Contractor to verify all quantities of materials shown on the plans before ordering same, as payment is provided for acceptable materials complete in place, and materials rejected due to improper fabrication or excess quantity or for other reasons within the control of the Contractor will not be paid for regardless of the quantities or dimensions shown on the plans. The Engineer, when requested, will check any or all material orders prepared by the Contractor, but such check will not relieve the Contractor of responsibility.

5.4. **Conformity with Plans, Specifications and Special Provisions.** All work performed and all materials furnished shall be in reasonably close conformity with the lines, grades, cross sections, dimensions, details, gradations, physical and chemical characteristics of materials in accordance with tolerances shown on the plans or indicated in the specifications and special provisions. The limits establishing reasonably close conformity will be as defined in these items of the contract.

In the event the Engineer finds that the work performed or the materials used are not within reasonably close conformity with the plans, specifications and special provisions, the affected material or product shall be removed and replaced or otherwise satisfactorily corrected by and at the expense of the Contractor.

Deviations from the plans and approved working drawings as may be required will in all cases be determined by the Engineer and authorized in writing.

5.5. **Co-ordination of Plans, Specifications and Special Provisions.** The specifications accompanying plans, special provisions, and supplemental agreements, are essential parts of the contract, and a requirement occurring in one is as binding as though occurring in all. They are intended to be cooperative and to describe and provide for a complete work. In cases of disagreement, figured dimensions shall govern over scaled dimensions, plans shall govern over standard and special specifications, and special provisions shall govern over both standard and special specifications and plans.

5.6. **Co-operation of Contractor.** The Contractor will be supplied with four copies of the plans, specifications and special provisions, and he shall have available on the work at all times one copy of each. He shall give the work his constant attention to facilitate the progress thereof and shall co-operate with the Engineer in every way possible. He shall have at all times a satisfactory and competent English-speaking Superintendent on the work, authorized to receive orders and to act for him. The Contractor shall designate to the Engineer in writing the name of such Superintendent, and he shall be furnished by the Contractor regardless of how much of the work may be sublet.

5.7. **Construction Stakes.** The Engineer will furnish and set construction stakes establishing lines and grades in roadway work and centerlines and benchmarks for bridge work and will furnish the Contractor with all necessary information relating to lines and grades. These stakes will be set sufficiently in advance of the work to avoid delay. The Contractor shall furnish, free of charge, additional stakes and other materials and templates necessary for marking and maintaining points and lines. The Contractor will be held responsible for the preservation of all stakes and marks, and if, in the opinion of the Engineer, any of the stakes or marks have been carelessly or willfully destroyed or disturbed by the Contractor, the cost of replacing them will be charged against him and deducted from the payment for the work.

5.8. **Authority and Duties of Inspectors.** Inspectors will be authorized to inspect all work done and all materials furnished. Such inspection may extend to all or to any part of the work and to the preparation or manufacture of the materials to be used. An Inspector will be assigned to the work by the Engineer and will report to the Engineer as to the progress of the work and the manner in which it is being performed; also to report whenever it appears that the materials furnished and the work performed by the Contractor fail to fulfill the requirements of the specifications and contract; and to call the attention of the Contractor to any such failure or other infringement. Such inspection will not relieve the Contractor from any obligation to perform the work in accordance with the requirements of the specifications. In case of any dispute arising between the Contractor and the Inspector as to materials furnished or the manner of performing the work, the Inspector will have authority to reject materials or suspend work until the question at issue can be referred to and decided by the Engineer. The Inspector will not be authorized to revoke, alter, enlarge, or release any requirement of these specifications, nor to approve or accept any portion of work, nor to issue instructions contrary to the plans and specifications. He will in no case act as foreman or perform other duties for the Contractor nor interfere with the management of the work.

5.9. **Inspection.** The Contractor shall furnish the Engineer with every reasonable facility for ascertaining whether or not the work as performed is in accordance with the requirements and intent of the contract. If the Engineer so requests, the Contractor shall, at any time before acceptance of the work, remove or uncover portions of the finished work as may be directed. After examination, the Contractor shall restore said portion of the work to the standard required by the specifications. Should the work thus exposed or examined prove acceptable, the uncovering or removing and replacing of the covering or making good of the parts removed shall be paid for as "Extra Work"; but should the work so exposed or examined prove unacceptable, the uncovering or removing and the replacing of the covering or making good of the parts removed shall be at the Contractor's expense. No work shall be done nor materials used without suitable supervision or inspection.

5.10. **Federal Inspection.** When the United States Government is to pay a portion of the cost of the work covered by the contract, the work will be subject to the inspection of its representative. Such inspection will in no sense make the United States Government a party to the contract.

5.11. **Removal of Defective and Unauthorized Work.** All work which has been rejected shall be remedied or removed and replaced in an acceptable manner by the Contractor at his own expense. Work done beyond the lines and grades given or as shown on the plans, except as herein provided, or any extra work done without written authority will be considered as unauthorized and done at the expense of the Contractor and will not be paid for. Work so done may be ordered removed at the Contractor's expense. Upon failure on the part of the Contractor to comply with any order of the Engineer made under the provisions of this paragraph, the Engineer will have authority to cause defective work to be remedied or removed and replaced and unauthorized work to be removed, and the cost thereof may be deducted from any money due or to become due to the Contractor.

5.12. **Final Inspection.** Whenever the work provided for in, and contemplated under, the contract has been satisfactorily completed and the final cleaning up performed, the Engineer in charge of the work will notify the Engineer authorized to accept same to make the "Final Inspection". Such inspection will be made within 10 days after such notification. After such final inspection, if the work is found to be satisfactory, the Contractor will be notified in writing of the acceptance of same. No time charge will be made against the Contractor between said date of notification of the Engineer in charge and the date of final inspection of the work.

Where the work consists of concrete pavements or concrete base, the "Final Acceptance" will not release the Contractor from responsibility for the thickness of the concrete, which will be determined by means of taking cores from the pavement. The coring of the pavement will be done within 90 days from completion of the pavement.

ITEM 6

CONTROL OF MATERIALS

6.1. Sources of Supply and Quality of Materials. The source of supply of each of the materials shall be approved by the Engineer before delivery is started and at the option of the Engineer, may be sampled and tested for determining compliance with the governing specifications by the Engineer before delivery is started. If it is found after trial that sources of supply previously approved do not produce uniform and satisfactory products, or if the product from any source proves unacceptable at any time, the Contractor shall furnish materials from other approved sources. Only materials conforming to the requirements of these specifications and approved by the Engineer shall be used in the work. All materials being used are subject to inspection or test at any time during their preparation or use. Any material which has been tested and accepted at the source of supply may be subjected to a check test after delivery and all materials which, when retested, do not meet the requirements of the specifications, will be rejected. No material which after approval has in any way become unfit for use shall be used in the work. If, for any reason, the Contractor selects a material which is approved for use by the Engineer by sampling and testing or other means, and then decides to change to a different material requiring additional sampling and testing for approval, the expense for such sampling and testing may be deducted from any moneys due or to become due to the Contractor.

Throughout these specifications where reference is made to the Department's Test Procedures, ASTM, AASHTO or bulletins of the Department for the quality of materials or sampling and testing, the latest standard, tentative standard or bulletin issued prior to the date of the proposal shall govern.

If it is the normal trade practice for manufacturers to provide warranties or guarantees for the materials and equipment provided herein, the Contractor shall turn the guarantees and warranties over to the Engineer for potential dealing with the manufacturers. The extent of such warranties or guarantees will not be a factor in selecting the successful bidder.

6.2. Samples and Tests. All materials, before being incorporated in the work, shall be inspected, tested and approved by the Engineer, and any work in which materials are used without prior test and approval or written permission of the Engineer may be ordered removed and replaced at the Contractor's expense. Sampling and testing of all materials proposed to be used, will be made by the Engineer. The selection of the method of test shall be designated by the Department. Where tests are required, other than those made in the laboratory, for the purpose of control in the manufacture

of a construction item, the Contractor will be required to furnish such facilities and equipment as may be necessary to perform the tests and inspection and shall be responsible for calibration of all test equipment required. When requested, the Contractor shall furnish a complete written statement of the origin, composition, and/or manufacture of any or all materials that are to be used in the work. If the Contractor chooses to use materials or products requiring inspection and approval at the point of manufacture or source, and such inspection will require abnormal expense, i.e., out of the contiguous forty-eight United States, the additional expense of such inspection over the normal cost of such services will be borne by the Contractor and will be deducted from any money due or to become due to the Contractor.

6.3. Plant Inspection. If the volume of the work, construction progress, and other considerations warrant, the Engineer may undertake the inspection of materials at the source. It is understood, however, that no obligation is assumed to inspect materials in that manner.

Plant inspection will be undertaken only upon condition that:

(a) The cooperation and assistance of the Contractor and the producer with whom he has contracted for materials is assured.

(b) The representative of the Engineer shall have full entry at all times to such parts of the plant as may concern the manufacture or production of the materials ordered.

(c) When required by the Engineer, the material producer shall furnish an approved weatherproof building for the use of the Inspector, such building to be located conveniently near the plant and independent of any building used by the material producer. The building shall be adequately lighted, heated and ventilated. Adequate restroom facilities will be provided.

(d) Where inspection requirements are such that it is necessary to use scales, measures and/or other equipment which may be required by the Engineer for the control of production and use of materials, the Contractor shall be responsible for furnishing and calibrating such equipment.

(e) In those cases where inspection of any item is requested for periods other than daylight hours, it shall be provided under the following conditions:

(1) Continuous production of materials for Departmental use is necessary due to the production volume being handled by the plant.

(2) The lighting provided by the plant is approved by the Engineer to be adequate to allow satisfactory inspection of the material being produced.

(f) Materials produced under Department inspection will be for Department use only unless released in writing by the Engineer.

6.4. Pretested Materials. Subject to conditions established in a written agreement between a supplier and the Materials and Tests Engineer, pretested and approved materials may be incorporated into the work.

6.5. Storage of Materials. Materials shall be so stored as to insure the preservation of their quality and fitness for the work. When considered necessary by the Engineer, they shall be placed on wooden platforms or other hard, clean surfaces and not on the ground. They shall be placed under cover when so directed. Stored materials shall be so located as to facilitate prompt inspection.

When approved by the Materials and Tests Engineer, selected materials or products may be pretested and approved for use, provided they are stored in an area meeting the requirements set forth by the Materials and Tests Engineer.

6.6. Defective Materials. All materials not conforming to the requirements of these specifications will be rejected and shall be removed immediately from the site of the work unless permitted to remain by the Engineer. Rejected materials, the defects of which have been subsequently corrected, shall have the status of new material. Upon failure on the part of the Contractor to comply with any order of the Engineer made under the provisions of this item, the Engineer will have authority to remove and replace defective material and to deduct the cost of removal and replacement from any money due or to become due to the Contractor.

6.7. Hauling of Material. Any vehicle, truck, truck-tractor, trailer or semi-trailer or combination of such vehicles, when used to deliver materials to a project shall comply with the State law concerning the gross weight of such vehicle or combinations of vehicles and load, unless authorized by permit to exceed the legal weight.

The allowable gross vehicle weight for various vehicle configurations is shown in Table I. In case a vehicle weight exceeds the allowable gross weight, or the posted load limit, a haul ticket will be issued and payment will be made only for that portion of the load allowed by Table I, or the posted load limit, whichever is less, including any tolerance allowance. Continued overloading will be grounds for rejection of such loads.

When the specifications establish measurement of and payment for materials by other than weight, the Engineer may require the weighing of the various types of loaded vehicles used by the Contractor to transport the material. This weight will be used to determine the maximum volume of the material being hauled that each type of vehicle may transport. The cost of such weighing shall be considered subsidiary to the pertinent bid item.

The above requirements are applicable to vehicles hauling materials over existing roadbeds and structures within the project limits where the roadbeds or structures will continue in use after project completion, except

as controlled by specifications and special provisions in the contract. The requirements do not apply to the transportation of materials from a borrow or base source, concrete plant, asphalt plant, etc., where the haul route does not require travel over public roads outside the project limits or existing roadbeds or structures within the project limits that will continue in use after project completion.

TABLE I

ALLOWABLE GROSS VEHICLE WEIGHTS

TYPICAL VEHICLES ARE SHOWN FOR ILLUSTRATIVE PURPOSES ONLY. THE "L" DISTANCE (OUT-TO-OUT) OF AXLES WILL GOVERN.

"L" Distance in feet	2 Axles	Single 3 Axles*	Comb. 3 Axles	Single 4 Axles	Comb 4 Axles	5 Axles	Comb. 6 Axles	7 Axles	"L" Distance in feet
4	34,000								4
5	34,000								5
6	34,000								6
7	34,000								7
8	34,000	42,000	42,000						8
9	39,000	42,500	42,500						9
10	40,000	43,500	43,500						10
11		44,000	44,000						11
12		45,000	45,000	50,000	50,000				12
13		45,500	45,500	50,500	50,500				13
14		46,500	46,500	51,500	51,500				14
15		47,000	47,000	52,000	52,000				15
16		48,000	48,000	52,500	52,500	58,000			16
17		48,500	48,500	53,500	53,500	58,500			17
18		49,900	49,900	54,000	54,000	59,000			18
19		51,400	51,400	54,500	54,500	60,000			19
20		52,800	52,800	55,500	55,500	60,500	66,000		20
21		54,000	54,300	56,000	56,000	61,000	66,500		21
22			55,800	56,500	56,500	61,500	67,000		22
23			57,200	57,500	57,500	62,500	68,000		23
24			58,700	58,700	58,700	63,000	68,500	74,000	24
25			59,650	59,650	59,650	63,500	69,000	74,500	25
26			60,000	60,600	60,600	64,000	69,500	75,000	26
27				61,550	61,550	65,000	70,000	75,500	27
28				62,500	62,500	65,500	71,000	76,500	28
29					63,450	66,000	71,500	77,000	29
30					64,400	66,500	72,000	77,500	30
31					65,350	67,500	72,500	78,000	31
32					66,300	68,000	73,000	78,500	32
33					67,250	68,500	74,000	79,000	33
34					68,200	69,000	74,500	80,000	34
35					69,150	70,000	75,000		35
36					70,100	70,500	75,500		36
37					71,050	71,000	76,000		37
38					72,000	71,500	77,000		38
39					72,000	72,500	77,500		39
40					72,000	73,000	78,000		40
41					72,000	73,500	78,500		41
42					72,000	74,000	79,000		42
43					72,000	75,000	80,000		43
44					72,000	75,500			44
45					72,000	76,000			45
46					72,500	76,500			46
47					73,500	77,500			47
48					74,000	78,000			48
49					74,500	78,500			49
50					75,500	79,000			50
51					76,000	80,000			51

*NOTE: Vehicles used exclusively to transport ready-mixed concrete may have a maximum gross vehicle weight of 64,000 pounds irrespective of dimension "L" except for operation on the Interstate System.

Construction traffic on existing bridges and direct traffic culverts within the limits of a project, except those to be widened or extended, will be governed by the following:

> Construction vehicles which exceed the legal load limit, which would require a permit to haul over the highway system will not be authorized across structures.
>
> Where a posted load limit exists on either the highway system or off the highway system, construction vehicles which exceed the posted load limit will not be permitted.
>
> Where a detour is not readily available or economically feasible to use, an occasional crossing of a structure with overweight equipment may be permitted for relocating equipment only, but not for hauling material, provided that a structural analysis indicates that no damage will result. The structural analysis must be approved by the Engineer. Temporary matting and/or other requirements may be imposed by the Engineer if an occasional crossing is permitted.

The Contractor is responsible for protection of existing small structures within the limits of a project. Any such structure damaged by the use of const· ·ction ·oment shall be restored to its original condition, or replaced ;ractor. Additional temporary fill may be required by the Engineer . ·ection of certain structures.

ITEM 7

LEGAL RELATIONS AND RESPONSIBILITIES TO THE PUBLIC

7.1. Laws to be Observed. The Contractor shall make himself familiar with and at all times shall observe and comply with all Federal, State, and local laws, ordinances, and regulations which in any manner affect the conduct of the work and shall indemnify and save harmless the State and its representatives against any claim arising from the violation of any such law, ordinance, or regulation, whether by himself or by his employees.

It is specifically agreed between the parties executing this contract that it is not intended by any of the provisions of any part of the contract to create the public or any member thereof a third party beneficiary hereunder, or to authorize any one not a party to this contract to maintain a suit for personal injuries or property damage pursuant to the terms or provisions of this contract. The duties, obligations and responsibilities of the parties to this contract with respect to third parties shall remain as imposed by law.

If sites, buildings and locations of historical, archaeological, educational or scientific interest are discovered after construction operations are begun, operations in that particular area shall cease immediately and the sites, buildings or locations shall be investigated and evaluated by the Department. An extension of time will be granted, if necessary, for delays caused by these investigations and evaluations.

7.2. **Permits, Licenses and Taxes.** The Contractor shall procure all permits and licenses, pay all charges, fees, and taxes, and give all notices necessary and incident to the due and lawful prosecution of the work.

Contractors performing work in accordance with plans and specifications previously approved by a City will not be required to comply with the provisions and requirements of that City's Electrical Ordinance.

7.3. **Patented Devices, Materials and Processes.** If the Contractor is required or desires to use any design, device, material, or process covered by letters of patent or copyright, he shall provide for such use by suitable agreement with the patentee or owner. The Contractor and the surety shall indemnify and save harmless the State from any and all claims for infringement by reason of the use of any patented design, device, materials, or process, or any trademark or copyright used in connection with the work and they shall indemnify the State against any costs, expenses, or damages which it may be obliged to pay, by reason of such infringement, at any time during the prosecution or after the completion of the work.

7.4. **Insurance.** Prior to the beginning of work the Contractor shall provide the Department with the Department's Certificate of Insurance covering the below listed insurance coverages:

A. Workers' Compensation Insurance
   Amount - Statutory

B. Comprehensive General Liability Insurance

Amounts -	Bodily Injury	$300,000 each occurrence
	Property Damage	$ 25,000 each occurrence
		$100,000 for aggregate

C. Comprehensive Automobile Liability Insurance

Amounts -	Bodily Injury	$100,000 each person
		$300,000 each occurrence
	Property Damage	$ 25,000 each occurrence

The State shall be included as an "Additional Insured" by Endorsement to policies issued for coverages listed in B and C above. A "Waiver of Subrogation Endorsement" in favor of the State shall be a part of each policy for coverages listed in A, B and C above.

The Contractor shall be responsible for any deductions stated in the policy.

7.5. **Restoration of Surfaces Opened by Permit.** The Contractor shall not allow any party to make an opening in the highway unless a duly authorized permit signed by the Engineer is presented. Until the acceptance of the work, the Contractor shall make all necessary repairs in the roadway where openings have been made by due authority. Such repair work will be paid for in accordance with Article 4.4, "Extra Work".

7.6. **Sanitary Provisions.** The Contractor shall, at his entire expense, provide and maintain in a neat, sanitary condition such accommodations for the use of his employees as may be necessary to comply with the requirements and regulations of the State Department of Health or of other authorities having jurisdiction.

7.7. **Public Safety and Convenience.** The safety of the public and the convenience of traffic shall be regarded as of prime importance. Unless otherwise shown on plans or except as herein provided, all portions of the highway shall be kept open to traffic. It shall be the entire responsibility of the Contractor to provide for traffic along and across the highway as well as for ingress and egress to private property. Ingress and egress to private property shall be provided as specified in the plans or as directed by the Engineer.

The Contractor shall plan and execute his operations in a manner that will cause the minimum interference with traffic. The Contractor shall secure the Engineer's approval of his proposed plan of operation, sequence of work and methods of providing for the safe passage of traffic before it is placed into operation. If at any time during construction the approved plan does not accomplish the intended purpose, due to weather or other conditions affecting the safe handling of traffic, the Contractor shall immediately make necessary changes therein to correct the unsatisfactory conditions.

If due to rains or other reasons, the shoulders, slopes and ditches become unsatisfactory for handling traffic, construction operations shall be suspended and the base course or surface area shall be opened to traffic. Where the specifications require or the Engineer directs that traffic be carried over or along the proposed work, construction operations shall be so prosecuted and new material kept so placed and spread as to allow the passage of traffic in comfort and safety.

Where an Asphalt Surface Treatment is placed for the full width in one operation, traffic may be carried on the shoulder slopes and ditches subject to approval by the Engineer. During the operation of placing asphalt and aggregate, the surface or pavement should not be closed to traffic for a period of more than 45 minutes.

During construction of proposed structures, unless otherwise shown on plans, the Contractor shall provide and maintain detours including temporary structures or crossovers of adequate structural design as may be re-

quired for the safety and convenience of the traffic. Unless otherwise provided on plans, the cost of constructing such temporary detours will be paid for in accordance with Article 4.4., "Extra Work".

At night or otherwise, all equipment not in use shall be stored in such manner and at such locations as not to interfere with the safe passage of traffic. The Contractor shall provide and maintain flaggers at such points and for such periods of time as may be required to provide for the safety and convenience of public travel and Contractor's personnel, and as directed by the Engineer. Flaggers shall be English speaking, courteous, well informed, physically and mentally able to effectually perform their duties in safeguarding and directing traffic and protecting the work, and shall be neatly attired and groomed at all times when on duty. When directing traffic, flaggers shall use standard attire, flags and signals and follow the flagging procedures set forth in The Texas Manual on Uniform Traffic Control Devices for Streets and Highways.

If, in the opinion of the Engineer, the above requirements are not complied with, the Engineer may do such work as he may consider necessary; however, this shall not change the legal responsibilities set forth in this item. The expense for such work will be borne by the Contractor and the cost thereof shall be deducted from any money due the Contractor or to become due to the Contractor.

7.8. **Barricades and Danger, Warning and Detour Signs and Traffic Handling.** The Contractor shall have the sole responsibility for providing, installing, moving, replacing, maintaining, cleaning and removing upon completion of work, all barricades, warning signs, barriers, cones, lights, signals and other such type devices and of handling traffic as indicated in the plans or as directed by the Engineer. All barricades, warning signs, barriers, cones, lights, signals and other such type devices shall conform to details shown on the plans or those indicated in the TMUTCD.

The Contractor may provide special signs not covered by plans to protect the traveling public against special conditions or hazards, provided however, that such signs are first approved by the Engineer.

Upon completion of the work, all barricades, warning signs, barriers, cones, lights, signals and other such type devices and evidence thereof shall be removed by the Contractor.

7.9. **Use of Explosives.** When the use of explosives is necessary for the prosecution of the work, the Contractor shall use the utmost care not to endanger life or property. All explosives shall be stored in a secure manner, and all storage places shall be marked clearly "DANGEROUS—EXPLOSIVES". The method of storing and handling explosives and highly inflammable materials shall conform with Federal and State laws and regulations.

In advance of doing any blasting work, involving the use of electric blasting caps within 200 feet of any railroad track, the Contractor shall give at least 24 hours advance notice to the nearest Roadmaster, Section Foreman, Agent, Signal Maintainer or Telegraph Operator with the request that his Superintendent be advised immediately of the pending use of explosives.

7.10. **Protection of Adjoining Property.** The Contractor shall take proper measures to protect the adjacent or adjoining property which might be injured by any process of construction, and, in case of any injury or damage resulting from any act or omission on the part of or on behalf of the Contractor, he shall restore at his own expense the damaged property to a condition similar or equal to that existing before such injury or damage was done, or he shall make good such injury or damage in an acceptable manner.

7.11. **Responsibility for Damage Claims.** The Contractor agrees to indemnify and save harmless the State, its agents, and employees from all suits, action or claims and from all liability and damages for any and all injuries or damages sustained by any person or property in consequence of any neglect in the performance of the contract by the Contractor and from any claims or amounts arising or recovered under the "Workers' Compensation Laws"; Article 6252-19, V.T.C.S. (Texas Tort Claims Act), or any other laws. He shall further so indemnify and be responsible for all damages or injury to property of any character occurring during the prosecution of the work resulting from any act, omission, neglect or misconduct on his part in the manner or method of executing the work; or from failure to properly execute the work; or from defective work or materials. He shall not be released from these responsibilities until all claims have been settled and suitable evidence to that effect furnished the Commission.

The Contractor's attention is directed to the fact that pipelines and other underground installations as may be shown on the plans have been taken from the best available information. There may be other pipelines or installations. The Contractor shall save harmless the State from any and all suits or claims resulting from damage by his operations to any pipeline or underground installation.

7.12. **Contractor's Responsibility for Work.** Until the final acceptance of the work by the Engineer, as evidenced in writing, it shall be under the charge and care of the Contractor. The Contractor shall rebuild and make good at his own expense all injuries and damages to the work occurring before its completion and acceptance. In case of suspension of work for any cause, the Contractor shall be responsible for the preservation of all materials. He shall provide suitable drainage of the roadway and shall erect temporary structures where required. The Contractor shall maintain the roadway in good and passable condition until final acceptance.

Wherever in the opinion of the Engineer any roadway or portion thereof is in suitable condition for travel, it shall be opened to traffic, as may be directed, and such opening shall not be held to be in any way the final acceptance of the roadway or any part of it or as a waiver of any of the provisions of the contract. Where it is considered by the Engineer to be in the public interest and so ordered in writing by him, any substantially completed roadway or portion thereof may be opened to traffic as follows: (1) when work is suspended for a considerable period of time at the convenience of the State, the Department will assume the responsibility for maintaining the entire roadway during the period of suspension, or (2) when the roadway or portion thereof is opened to traffic during construction operations at the convenience of the State, the Department will assume responsibility for the maintenance of the traveled way and shoulders during the period in which it is opened to traffic. The State in assuming responsibility for maintenance under this provision may require the work to be done in accordance with Article 4.4., "Extra Work", or may do it with its own forces; provided, however, this shall not change the legal responsibilities set out in Article 7.11., "Responsibility for Damage Claims".

When shown on plans, upon completion of all work provided for in the contract for any individual limits, control or project, the Engineer will make an inspection, and if the work is found to be satisfactory the Contractor will be released from further maintenance on that portion of the work. Such partial acceptance will be made in writing and shall in no way void or alter any terms of the contract.

7.13. **Personal Liability of Public Officials.** In carrying out the provisions of the contract or in exercising any power or authority granted thereunder, there shall be no liability upon the Engineer or his authorized assistants, either personally or otherwise, as they are agents and representatives of the State.

7.14. **Responsibilities to the Railroad Companies.** If the project crosses or is in close proximity to a railroad, the Contractor shall conduct his operations in such manner as not to interfere with, hinder or obstruct the Railroad Company in any manner whatever in the use or operation of its trains or other property.

Whether the Contractor's work will be on or in the vicinity of an at-grade railroad crossing, involves incidental work on railroad right of way or involves construction of a railroad grade separation structure, the Contractor shall notify the Railroad Company's Division Engineer and the State's Project Engineer at least 3 days prior to the performance of any work on the Railroad right of way, unless otherwise shown in the contract.

During the time this work is in progress the Contractor shall assign such responsible supervisory personnel as are necessary to assure that due

caution is observed by his workmen to keep the tracks and adjacent areas clear of debris and/or road materials and equipment which might damage the tracks and railroad facilities or obstruct the safe passage of trains.

In addition to the above, if the work requires construction, other than paving or surfacing, in the vicinity of the tracks (or shoofly), the Railroad Company will provide flaggers during the periods when beams are being erected and slab forms are being both constructed and removed over the tracks, when pilings are being driven or shafts drilled adjacent to the tracks and at such other times that the tracks may be subject to obstruction due to the construction operations. This flagging service will be paid for by the State as a Force Account Item with the Railroad Company and will be at no expense to the Contractor.

In the performance of said work no construction material or equipment shall be stored on the Railroad's right of way nearer than 15 feet from the centerline of any tracks. No forms or temporary false-work shall be within 8.5 feet horizontally from centerline of any tracks or within 22 feet vertically above the top of rails of any track unless otherwise shown in the plans.

Subject to the above conditions, the Contractor is allowed access on railroad right of way and is authorized to cross the tracks for the purpose of constructing a grade separation structure and approaches if required by the plans.

When permitted by the Railroad Company, the Contractor will also be allowed to cross the tracks in hauling other roadway material across the tracks at points on the right of way near the structure. The Railroad Company will furnish and install and later remove standard crossing plank at the expense of the Contractor. If automatic protection devices are required for the temporary crossing as determined by the Railroad Company and the State, they will be provided without cost to the Contractor. It shall be the Contractor's responsibility to insure that the tracks are left clear of equipment and debris which would endanger the safe operation of railroad traffic. The Contractor shall provide one crossing watchman on each side of the crossing to direct his equipment when he is hauling across the tracks. Any railroad flaggers required by the Railroad Company for protection of this crossing due to the hauling operations will be paid for by the State as a Force Account Item with the Railroad Company and will be at no expense to the Contractor. Equipment traffic shall be halted a safe distance away from the crossing upon the approach of railroad traffic.

The Railroad Company may require the Contractor to execute an "Agreement for Contractor's Temporary Crossing". If required, it is the Contractor's responsibility to secure this agreement at no expense to the State.

7.15. Abatement and Mitigation of Excessive or Unnecessary Construction Noise. Throughout all phases of the construction of this project, including the moving, unloading, operating and handling of construction equipment prior to commencement of work, during the project and after the work is complete, the Contractor shall make every reasonable effort to minimize the noise imposed upon the immediate neighborhood surrounding the area of construction. Particular and special efforts shall be exercised by the Contractor to avoid the creation of unnecessary noise impacts on adjacent sensitive receptors in the placement of non-mobile equipment such as air compressors, generators, pumps, etc. The placement of temporary parked mobile equipment with the engine running shall be such as to cause the least disruption of normal adjacent activities not associated with the work to be performed by the Contractor.

All equipment associated with the work shall be equipped with components designed by the manufacturer wholly or in part to suppress excessive noise and these components shall be maintained in their original operating condition considering normal depreciation. Noise-attenuation devices installed by the manufacturer such as mufflers, engine covers, insulation, etc., shall not be removed nor rendered ineffectual nor be permitted to remain off the equipment while the equipment is in use.

ITEM 8

PROSECUTION AND PROGRESS

8.1. Subletting or Assigning of Contract. The Contractor will not be permitted to assign, sell, transfer, or otherwise dispose of the contract or any portion thereof, or his rights, title, or interest therein without the approval of the Commission. The Contractor will not be permitted to sublet any portion of the contract without the approval of the Engineer. No subcontract will, in any case, relieve the Contractor of his responsibility under the contract and bond.

The Contractor shall perform with his own organization and with the assistance of workmen under his immediate superintendence, work of a value not less than 50 percent of the value of all work embraced in the contract exclusive of items not commonly found in contracts for similar work, or which require highly specialized knowledge, craftsmanship and/or equipment not ordinarily available in the organizations of Contractors performing work of the character embraced in the contract. The Contractor shall give assurance that the minimum wage for labor and the maximum amount to be deducted for board, if furnished, as stated in the governing provisions shall apply to labor performed on all work sublet, assigned or otherwise disposed of in any way. Written consent to sublet, assign or otherwise dispose of any portion of the contract shall not be construed to relieve the Contractor of any responsibility for the fulfillment of the contract.

8.2. **Prosecution of Work.** Prior to beginning construction operations, the Contractor shall submit to the Engineer a chart or brief outlining the manner of prosecution of the work that he intends to follow in order to complete the contract within the allotted time. The Contractor shall begin the work to be performed under the contract within 30 days after the date of the authorization to begin work and shall continuously prosecute same with such diligence as will enable him to complete the work within the time limit specified. He shall notify the Engineer at least 24 hours before beginning work at any point. He shall not open up work to the detriment of work already begun. The beginning, sequence, and prosecution of the work shall be governed by the orders of the Engineer, and the Contractor shall conduct his operations so as to impose a minimum interference to traffic.

8.3. **Workers and Equipment.** All workers employed by the Contractor shall have such skill and experience as will enable them to properly perform the duties assigned them. Any person employed by the Contractor or a subcontractor who, in the opinion of the Engineer, does not perform his work in a proper and skillful manner, or who is disrespectful, intemperate, disorderly, or otherwise objectionable, shall at the written request of the Engineer be forthwith discharged and shall not be employed again on any portion of the work without the written consent of the Engineer. The Contractor shall furnish such suitable machinery, equipment, and construction forces as may be necessary, in the opinion of the Engineer, for the proper prosecution of the work, and failure to do so may cause the Engineer to withhold all estimates which have or may become due or the Engineer may suspend the work until his requests are complied with.

8.4. **Temporary Suspension of Work.** The Engineer will have authority to suspend the work, wholly or in part, for such period as he may consider necessary, and the "Time Charge" will be suspended during such period. Notice of such suspension with the reasons therefor will be given the Contractor in writing. The Contractor shall not suspend work without written authority of the Engineer.

8.5. **Computation of Contract Time for Completion.** The Contractor shall complete the work within the number of working days stated in the contract. For the purpose of computation, working days will be considered 15 days after the date of the written authorization by the Engineer to begin work, unless otherwise provided in the contract.

The Engineer will furnish the Contractor a monthly statement on forms furnished by the Department, showing number of working days charged during the month, total number of working days allowed in contract, and the working days remaining under the contract. The Contractor will be allowed 10 days in which to protest the correctness of the statement. This protest shall be in writing, and shall show cause. Not filing a protest within the allowed ten days for any time statement will indicate the Contractor's

approval of the time charges as shown on that time statement and future consideration of that statement will not be permitted. If the satisfactory completion of the contract shall require unforeseen work or work and materials in greater amounts than those set forth in the contract, then additional working days or suspension of time charge will be allowed the Contractor equal to the time which, in the opinion of the Engineer, the work as a whole is delayed.

8.6. **Failure to Complete Work on Time.** If the Contractor fails to complete the contract in the working days specified, the time charge will be made for each working day thereafter.

The time set forth in the proposal for the completion of the work is an essential element of the contract. For each working day under the conditions described in the preceding paragraph that any work shall remain uncompleted after the expiration of the working days specified in the contract, together with any additional working days allowed, the amount per day given in the following schedule will be deducted from the money due or to become due the Contractor, not as a penalty, but as liquidated damages.

For Amount of Contract		Amount of Liquidated Damages Per Working Day
From More Than	To and Including	
$ 0	$ 25,000	$ 63
25,000	50,000	105
50,000	100,000	154
100,000	500,000	210
500,000	1,000,000	315
1,000,000	2,000,000	420
2,000,000	5,000,000	630
5,000,000	10,000,000	840
10,000,000	15,000,000	1050
15,000,000	20,000,000	1260
20,000,000	Over 20,000,000	1500

8.7. **Abandonment of Work or Default of Contract.** If the Contractor fails to begin the work within the time specified; or fails to perform the work with sufficient workmen and equipment; or has insufficient materials to insure the completion of the work within the contract time; or shall perform the work unsuitably; or shall neglect or refuse to remove materials or perform anew such work as may have been rejected as being defective or unsuitable; or shall discontinue the prosecution of the work without authority; or shall become insolvent or be declared bankrupt; or shall commit any act of bankruptcy or insolvency; or shall make an unauthorized assignment for the benefit of any creditor; or from any other cause whatsoever shall not

carry on the work in an acceptable manner, the Engineer may give notice in writing to the Contractor and his Surety of such delay, neglect, or default, specifying the same. If the Contractor within a period of 10 days after such notice shall not proceed in accordance therewith, then the party of the first part shall, upon written certificate from the Engineer of the fact of such delay, neglect, or default and the Contractor's failure to comply with such notice, have full power and authority, without violating the contract, to take the prosecution of the work out of the hands of the Contractor and to appropriate or use any or all materials and equipment on the ground as may be suitable and acceptable, and enter into an agreement for the completion of the contract according to the terms and provisions thereof or use such other methods as in his opinion may be required for the completion of the contract in an acceptable manner. All costs and charges incurred by the party of the first part, together with the costs of completing the work under contract, shall be deducted from any money due, or which may become due, the Contractor. In case the cost so incurred by the party of the first part shall be less than the amount which would have been payable under the contract if it had been completed by the Contractor, the Contractor will be entitled to receive the difference. In case such cost shall exceed the amount which would have been payable under the contract, then the Contractor and the Surety shall be liable and shall pay to the party of the first part the amount of such excess.

8.8. **Termination of Contract.** In the event of a National emergency and work to be performed under a contract is stopped directly or indirectly, because of the freezing or diversion of materials, equipment, or labor, as the result of an order or a proclamation of the President of the United States and/or an order of any Federal Authority, or in the event of a court order directly prohibiting further construction activities, and the circumstances or conditions are such that it is impossible within a reasonable time to proceed with a substantial portion of the work, as determined by the Engineer, then the Department and Contractor may, by written agreement, subject to the following conditions, terminate said contract or any part thereof.

When contracts, or any portion thereof, are definitely terminated or cancelled, and the Contractor released before all items of work included in his contract have been completed, payment will be made for the actual number of units of items of work completed at contract unit prices and no claim for loss of anticipated profits shall be considered. Reimbursement for organization of the work and moving equipment to and from the job will be considered where the volume of the work completed is too small to compensate the Contractor for these expenses under the contract unit prices, the intent being that an equitable settlement will be made with the Contractor, as determined by the Engineer.

Acceptable materials, obtained by the Contractor for the work, that have been inspected, tested and accepted by the Engineer, and that are not

incorporated in the work may, at the option of the Engineer, be purchased from the Contractor at actual cost as shown by receipted bills and actual cost records at such points of delivery as may be designated by the Engineer.

If such terms and conditions of cancellation of all or any part of a contract cannot be agreed upon, the original contract shall remain in full force and effect.

Termination of a contract, as stated above, will not relieve the Contractor or his surety of the responsibility of replacing defective work as required by the contract.

8.9. **Railroad Construction.** When work to be done within the limits of a project involves a railroad company, the Contractor will be required to plan and prosecute his own work to avoid interference with, or hinderance to, that portion of the work that is the responsibility of the railroad company. The observance of this is an essential part of the work to be done under the contract. No direct compensation will be allowed for fulfilling this requirement as such work is considered subsidiary to the various bid items of the contract.

An extension of time will be granted, if necessary, for delays caused to the Contractor by the railroad company. It is specifically understood, however, that delays caused by the railroad company will not be considered as a basis for a claim by the Contractor.

ITEM 9

MEASUREMENT AND PAYMENT

9.1. **Measurement of Quantities.** All work completed under contract will be measured by the Engineer according to United States Standard Measures unless otherwise specified. All longitudinal measurements for surface area will be made along the actual surface of the roadway and not horizontally, and no deduction will be made for structures in the roadway having an area of 9 square feet or less. For all transverse measurements for areas of base courses, surface courses, and pavements, the dimensions to be used in calculating the pay areas will be the neat dimensions and shall not exceed those shown on plans or ordered in writing by the Engineer. All materials which are specified for measurement by the cubic yard in vehicles shall be hauled in approved vehicles and measured therein at the point of delivery on the roadway. Vehicles for this purpose may be of any type or size satisfactory to the Engineer provided that the body is of such type that the actual contents may be readily and accurately determined. Each approved vehicle shall bear an identification mark indicating specific approval by the Engineer and also a permanent, plainly legible number. The Inspector may reject all loads not hauled in such approved vehicles.

In those items which provide for payment by "Plan Quantity", the measurement of such quantities shall be made by standard methods of calculation, using the methods described in the governing specification, and may or may not represent the exact quantity of material moved, handled or placed in the roadway or structure during the execution of the contract. The quantities shown on the plans, adjusted in accordance with the governing specification when required, will be the quantity paid for.

When the Engineer and Contractor agree in writing, the final payment for the pay items of sprinkling, rolling, overhaul, additional quarter mile haul, stripping, scraper work, discing, blading, bulldozer work, road grader work or mobilization may be fixed at plan quantity if the proposal quantity multiplied by the unit bid price is less than $250.00. This provision will apply regardless of whether the final quantity required is greater than or less than the quantity stated in the proposal.

9.2. **Scope of Payment.** The Contractor shall accept the compensation, as provided in the contract, in full payment for furnishing all materials, supplies, labor, tools and equipment necessary to complete the work under the contract; for any loss or damage which may arise from the nature of the work, from the action of the elements, or from any unforeseen difficulties which may be encountered during the prosecution of the work, until the final acceptance by the Engineer, except where there is conclusive evidence that such damage is due to inadequate design and not to improper prosecution of the work; for all risks of every description connected with the prosecution of the work; for all expenses and damages which might accrue to the Contractor by reason of delay in the initiation and prosecution of the work for any cause whatsoever; for any infringement of patent, trademark, or copyright; and for completing the work according to the plans and specifications. The payment of any current or partial estimate shall in no way affect the obligation of the Contractor at his own cost to repair or renew any defective parts of the construction or to replace any defective materials used in the contruction and to be responsible for all damages due to such defects if such defects or damages are discovered on or before the final inspection and acceptance of the work.

9.3. **Payment for Extra Work.** Extra work ordered, performed, and accepted will be paid for according to the terms of "Supplemental Agreements" or on the "Force Account" basis.

9.4. **Force Account.** When extra work is ordered to be performed on the "Force Account" basis, payment for same will be made as follows:

For all labor and foremen the Contractor will receive the rate of wage, to be agreed upon in writing before the beginning of such work, for each hour that said labor and foremen are actually engaged in such work, to which shall be added an amount equal to 25 percent of the sum thereof as compen-

sation. No charge will be made by the Contractor for organization or overhead expenses, except for actual cost of premiums on public liability and workers compensation insurance, Social Security, unemployment insurance taxes, and Contractor's bonds. No charge for superintendence will be made unless considered necessary and ordered by the Engineer.

The Contractor will receive the actual cost, including freight charges, of the materials used on such work to which cost will be added a sum equal to 25 percent thereof as compensation. In case material invoices indicate a discount may be taken, the actual cost will be the invoice price minus the discount.

For machinery, trucks, power tools, or other similar equipment which may be considered necessary or desirable to use, the Engineer will allow the Contractor a reasonable rental price, as agreed upon in writing before such work is begun, for each hour that said tools or equipment are in use on the work, which price will include the cost of fuel, lubricants, and repairs without any additional compensation percentage being added.

The compensation, as herein provided for, shall be received by the Contractor as payment in full for extra work done on the "Force Account" basis and will include use of small tools, overhead expense, and profit. The Contractor's representative and the Inspector shall compare records of extra work done on the "Force Account" basis at the end of each day. Copies of these records will be made upon suitable forms provided for this purpose by the Department and signed by both the Department's and the Contractor's representatives, one copy being forwarded to the Engineer and one to the Contractor. All claims for "Extra Work" performed on the "Force Account" basis shall be submitted to the Engineer by the Contractor upon certified statements to which shall be attached certified copies of invoices covering the cost of, and the freight charges on, all materials used in such work, and such statements shall be filed not later than the tenth day of the month following that in which the work was actually performed.

9.5. Partial Payments. The Engineer once each month will make an approximate estimate in writing of the materials in place and the amount of work performed and the value thereof at the contract unit prices.

In addition to the above and upon presentation of copies of invoices and freight bills, an estimate shall be made and included for the invoice cost of acceptable reinforcing steel, structural steel, precast concrete members, stone, gravel, sand or any other non-perishable materials delivered on the work or in acceptable storage places and which have not been used in the work prior to such estimate.

For acceptable structural steel, concrete members or units, and certain other structural components stored in any location approved by the Materials and Tests Engineer, an estimate shall be made and included for the in-

voice cost, exclusive of any transportation costs, of the material involved after the Contractor has furnished the Engineer with a copy of the paid invoice. Only materials requiring approved shop drawings, or where shop drawings are permitted due to quantities of units or because of stage construction, which are completely constructed and/or fabricated on the Contractor's order for a specific project, and on which an approved Test Report has been issued are eligible. Any repairs required, after fabricated materials have been approved for storage, shall require approval by the Engineer prior to repairs being made and repairs shall be made at the expense of the Contractor.

For precast concrete products which may be completely fabricated or constructed by the Contractor for which invoices or freight bills are not pertinent, and which have been stored in acceptable storage places, and which have not been used in the work, an estimate will be made and included for 60 percent of the unit price bid for the specified products.

Partial payments for material on hand or in acceptable storage shall not exceed the bid price.

From the total of the amounts so ascertained will be deducted 5 percent to be retained until after the completion of the entire work to the satisfaction of the Engineer, and the remaining 95 percent of the amount so ascertained will be paid to the Contractor less such amounts as may be required by the contract to be retained.

Partial estimates showing an amount of work performed since the last preceding estimate of less than $1,000.00 may be withheld until the amount of work performed on a partial estimate is at least $1,000.00.

9.6. Acceptance and Final Payment. When the work provided for in the contract shall have been completed by the Contractor, and all parts of the work have been approved and accepted by the Engineer, a final estimate showing the amount of the work and the amount due the Contractor under the contract will be prepared by the Engineer. The amount of the final estimate, less any sums previously paid under the contract will be paid to the Contractor.

PART II. CONSTRUCTION DETAILS

DIVISION I
EARTHWORK

ITEM 100

PREPARING RIGHT OF WAY

100.1. Description. This item shall consist of preparing the right of way for construction operations by the removal and disposal of all obstructions from the right of way and from designated easements, where removal of such obstructions is not otherwise provided for in the plans and specifications.

Such obstructions shall be considered to include remains of houses not completely removed by others, foundations, floor slabs, concrete, brick, lumber, plaster, cisterns, water wells, septic tanks, basements, abandoned utility pipes or conduits, underground service station tanks, equipment or other foundations, fences, retaining walls, outhouses, shacks, and all other debris.

This item shall also include the removal of trees and shrubs and other landscape features not designated for preservation, stumps, curb and gutter, driveways, paved parking areas, miscellaneous stone, brick, concrete, sidewalks, drainage structures, manholes, inlets, abandoned railroad tracks, scrap iron, all rubbish and debris whether above or below ground except live utility facilities.

It is the intent of this specification to provide for the removal and disposal of all obstructions and objectionable materials not specifically provided for elsewhere by the plans and specifications.

100.2. Construction Methods. The right of way for this project and such additional areas, including public or corporate areas, as made available for construction of this project shall be cleared of all structures and obstructions as defined above. Those trees, shrubs and other landscape features specifically designated by the Engineer for preservation shall be carefully protected from abuse, marring, or damage during construction operations. Continual parking and/or servicing of equipment under the branches of trees marked for preservation will not be permitted. Trees and shrubs designated for preservation that must be pruned shall be trimmed as directed and all exposed cuts over 2 inches in diameter shall be treated with an approved material.

Culverts, storm sewers, manholes and inlets shall be removed in proper sequence for maintenance of traffic and drainage. Unless otherwise indicated on plans all foundations and underground obstructions shall be removed to the following depths:

(1) In areas to receive embankment, 2 feet below natural ground.

(2) In areas to be excavated, 2 feet below the lower elevation of the excavation.

(3) All other areas, 1 foot below natural ground.

Trees, stumps, brush, roots, vegetation, logs, rubbish and other objectionable matter shall be removed in accordance with the Item, "Clearing and Grubbing".

All basement walls and floors, cisterns, septic tanks and storage tanks within the limits of the right of way shall be removed and the resulting holes backfilled with approved material as directed by the Engineer.

Holes remaining after removal of all obstructions, objectionable material, trees, stumps, etc., shall be backfilled and tamped as directed by the Engineer. The Contractor shall complete the operation of preparing right of way by blading, bulldozing, or by other approved methods, so that the prepared right of way shall be free of holes, ditches and other abrupt changes in elevations and irregularities of contour.

The remaining ends of all abandoned storm sewers, culverts, sanitary sewers, conduits, and water or gas pipes over 3 inches in diameter, shall be plugged with an adequate quantity of concrete to form a tight closure when backfilling is required.

Abandoned water wells shall be removed to the grade indicated on the plans or as directed by the Engineer.

All materials and debris removed shall become the property of the Contractor and shall be removed from the right of way, except that gravel, brick, stone, or broken concrete, when permitted by the Engineer, may be used in the roadway embankment.

Materials placed in the embankment shall conform to the requirements of the governing specification for "Embankment".

100.3. **Measurement.** "Preparing Right of Way" will be measured by the "Acre" or by the "100-Foot Station" regardless of the width of the established right of way.

Measurement for payment will be made only on areas indicated and classified on plans as "Preparing Right of Way" except that required work on additional areas (such as additional right of way, additional cut and embankment areas, etc.) not originally proposed by plans but found necessary

during construction, and which comes within the purview of "Preparing Right of Way" as established on plans for the contract shall be measured accordingly.

Areas other than those set forth above will not be measured for payment.

100.4. Payment. All work performed and measured as provided under "Measurement" will be paid for at the unit price bid for "Preparing Right of Way", which price shall be full compensation for furnishing all labor, equipment, tools, supplies and incidentals necessary to complete the work.

All work performed in areas not so designated on plans as "Preparing Right of Way", except "additional areas" as defined under "Measurement" or specifically covered otherwise, will not be paid for directly but shall be considered as subsidiary work pertaining to the various bid items.

The total payment for this item will not exceed 10 percent of the original contract amount prior to the final estimate. The portion of the contract amount for this item in excess of 10 percent of the total contract amount will be paid on the final estimate.

ITEM 102

CLEARING AND GRUBBING

102.1. Description. "Clearing and Grubbing" shall consist of the removal and disposal of trees, stumps, brush, roots, vegetation, logs, rubbish and other objectionable matter.

102.2. Construction Methods. The right of way shall be cleared of stumps, brush, logs, rubbish, trees and shrubs, except such trees and shrubs and certain areas designated by the Engineer for preservation. Those trees, shrubs and other landscape features specifically designated by the Engineer for preservation shall be carefully protected from abuse, marring or damage during construction operations. Continual parking and/or servicing of equipment under the branches of trees designated for preservation will not be permitted. Trees and shrubs designated for preservation that must be pruned shall be trimmed as directed and all exposed cuts over 2 inches in diameter shall be treated with an approved material.

Areas required for embankment construction; for roadway, channel and structural excavation; and for borrow sites and material sources shall be cleared and grubbed. On areas required for roadway, channel, or structural excavation, all stumps, roots, etc., (except for designated trees and brush) shall be removed to a depth of at least 2 feet below the lower elevation of the excavation. On areas required for embankment construction, all stumps, roots, etc., (except for designated trees and brush) shall be removed to a

depth of at least 2 feet below the existing ground surface. All holes remaining after clearing and grubbing shall be backfilled and tamped as directed by the Engineer and the entire area bladed to prevent ponding of water and to provide drainage, except, in areas to be immediately excavated, the Engineer may direct that the holes not be backfilled. When permitted by the plans, trees and stumps may be cut off as close to natural ground as practicable on areas which are to be covered by at least three feet of embankment. On areas required for borrow sites and material sources, stumps, roots, etc., (except for designated trees and shrubs) shall be removed to the complete extent necessary to prevent such objectionable matter becoming mixed with the material to be used in construction.

All cleared and grubbed material shall be disposed of in a manner satisfactory to the Engineer. Unless otherwise provided, all merchantable timber removed as required above shall become the property of the Contractor.

When a portion of a project falls within the limits of a National Forest, as indicated on the plans, the following provisions shall apply:

(1) In the National Forest area, the United States reserves the right of sale or other disposition of merchantable timber necessarily cut by the Contractor in the execution of his work. Merchantable timber removed shall be bucked into log lengths and the Forest Ranger notified in order that a prompt sale may be made.

(2) Burning of Brush: When burning of brush is permitted, the following shall govern:

(a) The nearest Forest Service lookout shall be notified of the intention to burn before burning any brush or other debris. Brush piles and fires shall be controlled as to size to eliminate possible dangers of forest fires.

(b) Where construction is on new location, the brush shall be piled and burned in the center of the right of way.

(c) Where construction is on an existing location through which the traveling public is to be routed during construction, brush shall be burned as near the center of the right of way as is practical without creating a hazard to traffic.

(d) In the event there are material pits which require clearing and grubbing the brush shall be placed in the center of the pit before burning.

(3) No timber shall be cut or defaced outside of the right of way lines or material pit limits as indicated on the plans or by the Engineer.

102.3. **Measurement.** "Clearing and Grubbing" will be measured by the "Acre" or by the "100-Foot Station" regardless of the width of the established right of way.

Measurement for payment will be made only on areas indicated and clas-

sified on plans as "Clearing and Grubbing", except that required work on additional areas (such as additional right of way, additional borrow and material sources, additional cut and embankment areas, etc.) not originally proposed by plans but found necessary during construction, and which comes within the purview of "Clearing and Grubbing" as established on plans for the contract shall be measured accordingly.

When indicated on plans, "Clearing and Grubbing (Palms)" will be measured by each palm removed. Palms not so designated for removal or ordered by the Engineer to be removed shall be preserved.

Measurement of palms for payment will not include sprouts or volunteer palms unless the sprouts or volunteer palms are more than 6 feet high measured from the ground up to the base of the head.

When indicated on the plans, "Clearing and Grubbing (Tree)" will be measured by each tree removed.

Areas other than those set forth above will not be measured for payment.

102.4. Payment. All work performed and measured as provided under "Measurement" will be paid for at the unit price bid for "Clearing and Grubbing", "Clearing and Grubbing (Palms)" and/or "Clearing and Grubbing (Tree)" of the size specified, which price shall be full compensation for furnishing all labor, equipment, tools, supplies, arranging for and providing disposal sites for palms if disposed of by hauling off the project, and incidentals necessary to complete the work.

All work performed in clearing and grubbing areas not so designated on plans, except "additional areas" as defined under "Measurement", will not be paid for directly but shall be considered as subsidiary work pertaining to the various bid items.

The total payment for this item will not exceed 10 percent of the original contract amount prior to the final estimate. The portion of the contract amount for this item in excess of 10 percent of the total contract amount will be paid on the final estimate.

ITEM 104

REMOVING OLD CONCRETE

104.1. Description. "Removing Old Concrete" shall consist of breaking up, removing, and satisfactorily storing or disposing of old concrete existing at locations shown on plans.

104.2. Construction Methods. Existing concrete to be salvaged consisting of pavement (with or without bituminous top), floors, porches,

patios, riprap, median strips, foundations, sidewalks, driveways, combined curb and gutter, or curb shall be broken up into pieces not greater than 18 inches in any dimension by air-driven machinery or other suitable means. The use of explosives for breaking up old concrete to be removed will not be permitted except when authorized in writing by the Engineer, and when so authorized, adequate precautions shall be taken to prevent damage to adjacent property. Reinforcing steel shall be cut as necessary for satisfactory salvage or disposal.

Where only a portion of the existing concrete is to be removed, special care shall be exercised to avoid damage to that portion of the concrete to remain in place. The existing concrete shall be cut to the neat lines shown on plans or established by the Engineer, and any existing concrete beyond the neat lines so established which is damaged or destroyed by these operations shall be replaced at the Contractor's entire expense.

When indicated on the plans, old concrete which is removed shall be loaded, hauled and neatly stored at designated sites, or otherwise used as directed. Portions of existing concrete not specified for salvage shall be disposed of by the Contractor at locations to be obtained by him, and the provision that the concrete be broken into pieces not greater than 18 inches in any dimension shall not apply.

Work performed under this item shall be inaugurated at such time, and prosecuted in such manner as to cause a minimum of inconvenience to traffic or to the owners of adjacent property.

104.3. Measurement. Existing concrete pavement, floors, porches, patios, riprap, median strips, foundations, concrete sidewalks, and concrete driveways, removed as prescribed above, will be measured by the square yard in its original position, regardless of its thickness or the depth of covering, or by the cubic yard based on calculated volume.

Existing combined concrete curb and gutter and concrete curb, removed as prescribed above, will be measured by the linear foot in its original position, regardless of the dimensions of same.

Monolithic concrete and/or dowel concrete curb will be considered as part of the concrete pavement and will not be measured separately.

104.4. Payment. The work performed as prescribed by this item, measured as provided under "Measurement" will be paid for at the unit price bid for "Removing Old Concrete"(of the type specified), which price shall be full compensation for breaking up the concrete, cutting reinforcing steel when required, loading, hauling, unloading, and satisfactorily storing or disposing of the material, and for all labor, tools, equipment, manipulation and incidentals necessary to complete the work.

ITEM 110

ROADWAY EXCAVATION

110.1. Description. "Roadway Excavation" shall consist of the required excavation within the limits of the roadway (except excavation otherwise designated as channel excavation, structural excavation, etc.); the removal and proper utilization or disposal of all excavated materials; and the constructing, shaping and finishing of all earthwork on the entire length of roadway and approaches to same, in conformity with the required lines, grades and typical cross sections and in accordance with specification requirements herein outlined. Compaction of embankments shall conform either to the method of "Ordinary Compaction" or the "Density Control" method as outlined in the Item, "Embankment". The method used shall be as shown on the plans.

110.2. Construction Methods. All roadway excavation and corresponding embankment construction shall be performed as specified herein and in the Item, "Embankment", and the completed roadway shall conform to the established alignment, grades and cross sections.

All suitable excavated materials shall be utilized, insofar as practicable, in constructing the required roadway sections or in uniformly widening embankments, flattening slopes, etc., as directed by the Engineer. Unsuitable roadway excavation and roadway excavation in excess of that needed for construction shall be known as "Waste" and shall become the property of the Contractor to be disposed of by him outside the limits of the right of way at a location suitable to the Engineer. Unsuitable material encountered below subgrade elevation in roadway cuts, when declared "Waste" by the Engineer, shall be replaced with material from the roadway excavation or with other suitable material as directed by the Engineer. All work involved shall be paid for under the pertinent bid items of the contract.

"Waste" will not be permitted unless specifically indicated on plans or required by written order of the Engineer.

Payment will not be allowed for excavation of any material which is used for purposes other than those designated except as provided in the governing specifications under the Item, "Scope of Work".

During construction the roadbed and ditches shall be maintained in a condition to insure proper drainage at all times. Ditches and channels shall be so constructed and maintained to avoid damage to the roadway section.

Unless otherwise indicated on plans, excavation in solid rock shall extend 6 inches below the required subgrade elevation for the entire roadbed width, and shall be backfilled with suitable selected materials as indicated

on plans or as instructed by the Engineer. All slopes except in solid rock or other material which, in the judgment of the Engineer, require variation shall be accurately shaped and care shall be taken that no material is loosened below the required slopes. All breakage and slides shall be removed and disposed of as directed.

110.3. Selection of Materials. Where shown on plans, selected materials shall be utilized to improve the roadbed, in which case the work shall be performed in such manner and sequence that suitable materials may be selected, removed separately, and deposited in the roadway within limits and at elevations required.

110.4. Measurement. All roadway excavation will be measured in its original position and the volume computed in cubic yards by the method of average end areas. Measurements will include all authorized excavation below grades and slides or overbreakage, which, in the opinion of the Engineer, are not attributed to the Contractor's carelessness, except that all overbreakage in solid rock shall be within 1 foot outside neat lines of the typical cross section shown on plans, or as set by the Engineer and shall not exceed in any 100-foot station, 10 percent of the actual quantity of rock required for the same station.

110.5. Payment. All work performed as required herein and in the Item, "Embankment" and measured as provided under "Measurement" will be paid for at the unit price bid under one of the following methods:

(1) Where the "Ordinary Compaction" method of compaction is required, payment will be made for "Road Excavation (Ordinary Compaction)".

(2) Where the "Density Control" method of compaction is required, payment will be made for "Road Excavation (Density Control)".

The prices bid shall each be full compensation for furnishing all materials, tools, equipment and incidentals necessary to complete the work. Payment for unauthorized work will not be made.

All work required for disposing of waste, including haul, will not be paid for directly but shall be considered as subsidiary work pertaining to the various contract items and such costs shall be included in the unit priced bid for these items.

When specified on the plans, all hauling of materials (including authorized waste) will not be paid for directly, but shall be considered as subsidiary work pertaining to the various contract items, and such costs shall be included in the unit prices bid. Otherwise, all hauling of materials (excluding waste) will be measured and paid for in accordance with the provisions governing the Item, "Overhaul".

ITEM 120

CHANNEL EXCAVATION

120.1. **Description.** "Channel Excavation" shall consist of required excavation for all channels, both on and outside the limits of the highway; the removal and proper utilization or disposal of all excavated materials; and constructing, shaping and finishing of all earthwork involved in conformity with the required lines, grades and typical cross sections and in accordance with specification requirements herein outlined. Compaction of embankments shall conform either to the method of "Ordinary Compaction" or the "Density Control" method as outlined in the Item, "Embankment". The method used shall be as shown on the plans.

120.2. **Construction Methods.** All suitable materials removed from the excavation shall be used, insofar as practicable, in the formation of embankments as required by the Item, "Embankment", or shall be otherwise utilized or satisfactorily disposed of as indicated on plans, or as directed, and completed work shall conform to the established alignment, grades and cross sections. During construction, the channel shall be kept drained, insofar as practicable, and the work shall be prosecuted in a neat workmanlike manner.

Unsuitable channel excavation in excess of that needed for construction shall be known as "Waste" and shall become the property of the Contractor to be disposed of by him outside the limits of the right of way.

Payment will not be allowed for excavation of any material which is used for purposes other than those designated, except as provided in the governing specifications under the Item, "Scope of Work".

120.3. **Selection of Materials.** Where shown on plans, selected materials shall be utilized in the formation of embankment or to improve the roadbed, in which case the work shall be performed in such manner and sequence that suitable materials may be selected, removed separately and deposited in the roadway within limits and at elevations required.

120.4. **Measurement.** All channel excavation will be measured in its original position and the volume computed in cubic yards by the method of average end areas.

120.5. **Payment.** All work performed as required herein and in the Item, "Embankment" and measured as provided under "Measurement" will be paid for at the unit price bid under one of the following methods:

(1) Where the "Ordinary Compaction" method is required, payment will be made for "Channel Excavation (Ordinary Compaction)".

(2) Where the "Density Control" method of compaction is required, payment will be made for "Channel Excavation (Density Control)".

The prices bid shall each be full compensation for furnishing all labor, materials, tools, equipment and incidentals necessary to complete the work. Payment for unauthorized work will not be made.

All work required for disposing of waste, including haul, will not be paid for directly, but shall be considered as subsidiary work pertaining to the various contract items, and such costs shall be included in the unit prices bid for these items.

When specified on the plans, all hauling of materials will not be paid for directly, but shall be considered as subsidiary work pertaining to the various contract items, and such cost shall be included in the unit prices bid. Otherwise, all hauling of materials will be measured and paid for in accordance with the provisions governing the Item, "Overhaul".

ITEM 130

BORROW

130.1. Description. "Borrow" shall consist of required excavation, removal and proper utilization of materials obtained from designated or approved sources. Compaction of embankments constructed from borrow as provided herein shall conform either to the method of "Ordinary Compaction" or the "Density Control" method as outlined in the Item, "Embankment".

Borrow will be resorted to only when shown on plans or directed by the Engineer and then only from designated or approved sources.

130.2. Construction Methods. All suitable materials removed from the excavation shall be used, insofar as practicable, in the formation of embankments as required by the governing Item for "Embankment", or shall otherwise be utilized as indicated on plans or as directed, and the completed work shall conform to the established alignment, grades and cross section. During construction, the borrow sources shall be kept drained, and the work shall be prosecuted in a neat and workmanlike manner.

Payment will not be allowed for excavation of any material which is used for purposes other than those designated, except as provided in the governing specifications under the Item, "Scope of Work".

The Engineer shall be notified sufficiently in advance of opening any designated borrow source to permit necessary testing, staking and measurement.

130.3. Selection of Materials. Where shown on plans, selected materials shall be utilized in the formation of embankment or to improve the roadbed, in which case the work shall be performed in such manner and sequence that suitable materials may be selected, removed separately and deposited in the roadway within limits and at elevations required. Where required, acceptable borrow material, when tested by standard Department laboratory methods, shall meet the requirements indicated on the plans.

Tolerances: When tolerances are permitted by the plans, the limits establishing reasonably close conformity with the specified plasticity index are defined by the following:

The Engineer may accept the material, provided that not more than two of any 10 consecutive plasticity index samples tested are outside the specified limit by no more than two points and where no two consecutive tests are outside the specified limit.

130.4. Measurement. Borrow will be measured in its original position and the volume computed in cubic yards by the method of average end areas.

130.5. Payment. All work performed as required herein and in the Item, "Embankment" and measured as provided under "Measurement" will be paid for at the unit price bid under one of the following methods:

(1) Where the "Ordinary Compaction" method is required, payment will be made for "Borrow (Ordinary Compaction)".

(2) Where the "Density Control" method of compaction is required, payment will be made for "Borrow (Density Control)".

The prices bid shall each be full compensation for furnishing all labor, for all royalty, materials, tools, equipment and incidentals necessary to complete the work. Payment for unauthorized work will not be made.

Payment will not be allowed the Contractor for any materials excavated prior to staking out and cross sectioning the borrow sources by the Engineer.

When specified on the plans, all hauling of materials will not be paid for directly, but shall be considered as subsidiary work pertaining to the various contract items, and such cost shall be included in the unit prices bid. Otherwise, all hauling of materials will be measured and paid for in accordance with the provisions governing the Item, "Overhaul".

ITEM 131

BORROW
(Delivered)

131.1. Description. "Borrow" shall consist of required excavation, removal and proper utilization of materials secured from sources obtained by the Contractor and approved by the Engineer. Compaction of embankments constructed from borrow as provided herein shall conform either to the method of "Ordinary Compaction" or the "Density Control" method as outlined in the Item, "Embankment".

Borrow will be resorted to only when shown on plans or directed by the Engineer and then only from approved sources.

131.2. Types. All authorized borrow shall conform to one of the following types:

Type A (Select Borrow). This material shall consist of sand or other suitable granular material, free from vegetation or other objectionable matter, reasonably free from lumps of earth and when tested in accordance with Test Methods Tex-104-E, Tex-105-E and Tex-106-E shall meet the following requirements:

The liquid limit shall not exceed	45
The plasticity index shall not be less than	4
nor more than	15

Type B. This material shall consist of suitable earth material such as loam, clay or other such materials that will form a stable embankment.

Type C. This material shall conform to the specification requirements shown on the plans.

131.3. Construction Methods. All suitable material shall be used in the formation of embankments as required by the governing Item for "Embankment", or shall otherwise be utilized as indicated on plans or as directed, and the completed work shall conform to the established alignment, grades and cross section. During construction, the borrow sources shall be kept drained, insofar as practicable, to permit final cross sections to be taken when required.

The borrow source shall be left in a suitable condition, so as to provide proper drainage where practical and to permit accurate measurement when required.

The Engineer shall be notified sufficiently in advance of opening any approved borrow source to permit necessary testing, staking and measurement, when required.

131.4. **Measurement.** Borrow will be measured by the method described as either Class 1, 2 or 3 as follows and as specified on the plans:

When Class 1 measurement is specified, borrow will be measured in its original position and the volume computed in cubic yards by the method of average end areas.

When Class 2 measurement is specified, borrow will be measured by the cubic yard in vehicles as delivered on the road.

When Class 3 measurement is specified, borrow will be measured by the cubic yard in its final position as the volume of embankment computed in place between (1) the original ground surfaces or the surface embankment constructed from roadway excavation and (2) the lines, grades and slopes of the accepted embankment, by the average end area method. The Contractor shall schedule his operations in such a manner as to facilitate the measurement of the various pay items.

131.5. **Payment.** All work performed as required herein and in the Item "Embankment" and measured as provided under "Measurement" will be paid for at the unit price bid under one of the following methods:

(1) Where the "Ordinary Compaction" method is required, payment will be made for "Borrow (Delivered) (Ordinary Compaction)" of the type and class indicated on the plans.

(2) Where the "Density Control" method of compaction is required, payment will be made for "Borrow (Delivered) (Density Control)" of the type and class indicated on the plans.

The prices bid shall each be full compensation for furnishing all labor; for all materials; for all royalty and freight involved; for all hauling and delivering on the road; and for all tools, equipment and incidentals necessary to complete the work. Payment for unauthorized work will not be made.

When Class 1 measurement is specified, payment will not be allowed the Contractor for any materials excavated prior to staking out and cross sectioning the borrow sources by the Engineer.

ITEM 132

EMBANKMENT

132.1. **Description.** This item shall govern the placement and compaction of all materials obtained from roadway, borrow, channel and structural excavation for utilization in the construction of roadway embankments, levees and dykes.

132.2. Construction Methods.

(1) **General.** Prior to placing any embankment, all "Preparing Right of Way" and/or "Clearing and Grubbing" operations shall have been completed on the excavation sources and areas over which the embankment is to be placed. Stump holes or other small excavations in the limits of the embankments shall be backfilled with suitable material and thoroughly tamped by approved methods before commencing embankment construction. The surface of the ground, including plowed loosened ground or surface roughened by small washes or otherwise shall be restored to approximately its original slope by blading or other methods and, where indicated on plans or required by the Engineer, the ground surface thus prepared shall be compacted by sprinkling and rolling.

Unless otherwise indicated on the plans, the surface of the ground of all unpaved areas other than rock which are to receive embankment shall be loosened by scarifying or plowing to a depth of not less than 4 inches. The loosened material shall be recompacted with the new embankment as hereinafter specified.

Where indicated on plans or directed by the Engineer, the surface of hillsides to receive embankment shall be loosened by scarifying or plowing to a depth of not less than 4 inches, or cut into steps before embankment materials are placed. The embankment shall then be placed in layers, as hereinafter specified, beginning at the low side in part width layers and increasing the widths as the embankment is raised. The material which has been loosened shall be recompacted simultaneously with the embankment material placed at the same elevation.

Where embankments are to be placed adjacent to or over existing roadbeds, the roadbed slopes shall be plowed or scarified to a depth of not less than 6 inches and the embankment built up in successive layers, as hereinafter specified, to the level of the old roadbed before its height is increased. Then, if directed, the top of the old roadbed shall be scarified and recompacted with the next layer of the new embankment. The total depth of the scarified and added material shall not exceed the permissible depth of layer.

Trees, stumps, roots, vegetation or other unsuitable materials shall not be placed in embankment.

Except as otherwise required by the plans, all embankment shall be constructed in layers approximately parallel to the finished grade of the roadbed and unless otherwise specified each layer shall be so constructed as to provide a uniform slope of 1/4 inch per foot from the center line of the roadbed to the outside, except that on superelevated curves each layer shall be constructed to conform to the superelevation required by the governing standard.

Embankments shall be constructed to the grade established by the Engineer and completed embankments shall correspond to the general shape of the typical sections shown on the plans and each section of the embankment shall correspond to the detailed section or slopes established by the Engineer. After completion of the roadway, it shall be continuously maintained to its finished section and grade until the project is accepted.

(2) **Earth Embankments.** Earth embankments shall be defined as those composed principally of material other than rock, and shall be constructed of accepted material from approved sources.

Except as otherwise specified, earth embankments shall be constructed in successive layers for the full width of the individual roadway cross section and in such lengths as are best suited to the sprinkling and compaction methods utilized.

Layers of embankment may be formed by utilizing equipment which will spread the material as it is dumped, or they may be formed by being spread by blading or other acceptable methods from piles or windrows dumped from excavating or hauling equipment in such amounts that material is evenly distributed.

Minor quantities of rock encountered in constructing earth embankment shall be incorporated in the specified embankment layers, or may be placed in accordance with the requirements for the construction of rock embankments in the deeper fills within the limits of haul shown on the plans, provided such placement of rock is not immediately adjacent to structures. Also, rock may be placed in the portions of embankment outside the limits of the completed roadbed width where the size of the rock prohibits their incorporation in the normal embankment layers.

Each layer of embankment shall be uniform as to material, density and moisture content before beginning compaction. Where layers of unlike materials abut each other, each layer shall be featheredged for at least 100 feet or the material shall be so mixed as to prevent abrupt changes in the soil. No material placed in the embankment by dumping in a pile or windrow shall be incorporated in a layer in that position, but all such piles or windrows shall be moved by blading or similar methods. Clods or lumps of material shall be broken and the embankment material mixed by blading, harrowing, disking or similar methods to the end that a uniform material of uniform density is secured in each layer. Water required for sprinkling to bring the material to the moisture content necessary for maximum compaction shall be evenly applied and it shall be the responsibility of the Contractor to secure a uniform moisture content throughout the layer by such methods as may be necessary. In order to facilitate uniform wetting of the embankment material, the Contractor may apply water at the material source if the sequence and methods used are such as not to cause an undue waste of water. Such procedure shall be subject to the approval of the Engineer.

All earth cuts, full width or part width cuts in side hill, which are not required to be excavated below subgrade elevation for base and backfilled, shall be scarified to a uniform depth of at least 6 inches below grade, and the material shall be mixed and reshaped by blading and then sprinkled and rolled in accordance with the requirements outlined above for earth embankments and to the same density as that required for the adjacent embankment.

Compaction of embankments shall be obtained by the method hereinafter described as "Ordinary Compaction" or the method hereinafter described as the "Density Control" method.

Ordinary Compaction.

When the "Ordinary Compaction" method is specified, the following provisions shall govern: Each layer shall not exceed 8 inches of loose depth, and shall be compacted until there is no evidence of further compaction, in accordance with provisions governing the Item or Items of "Rolling". Prior to and in conjunction with the rolling operation, each layer shall be brought to the moisture content ordered by the Engineer, and shall be kept leveled with suitable equipment to insure uniform compaction over the entire layer.

Density Control.

When the "Density Control" method of compaction is specified, each layer shall be compacted to the required density by any method, type and size of equipment which will give the required compaction. The depth of layers, prior to compaction, shall depend upon the type of sprinkling and compacting equipment used. Prior to and in conjunction with the rolling operation, each layer shall be brought to the moisture content necessary to obtain the required density and shall be kept leveled with suitable equipment to insure uniform compaction over the entire layer. Testing for density will be in accordance with Test Method Tex-114-E and Test Method Tex-115-E.

For each layer of earth embankment and select material, it is the intent of this specification to provide the density as required herein, unless otherwise shown on the plans. Swelling soils (soils with plasticity index of 20 or more) shall be sprinkled as required to provide not less than optimum moisture and compacted to the extent necessary to provide not less than 98 percent nor more than 102 percent of the density as determined in accordance with Test Method Tex-114-E. Non-swelling soils (soils with plasticity index less than 20) shall be sprinkled as required and compacted to the extent necessary to provide not less than 100 percent of the density as determined in accordance with Test Method Tex-114-E. Field density determination will be made in accordance with approved methods.

After each layer of earth embankment or select material is complete, tests as necessary will be made by the Engineer. If the material fails to

meet the density specified, the course shall be reworked as necessary to obtain the specified compaction, and the compaction method shall be altered on subsequent work to obtain specified density. Such procedure shall be determined by, and subject to, the approval of the Engineer.

When provided by the plans, the Engineer may order proof rolling to test the uniformity of compaction of the embankment layers. All irregularities, depressions, weak or soft spots which develop shall be corrected immediately by the Contractor.

Should the subgrade, due to any reason or cause, lose the required stability, density or finish before the pavement structure is placed, it shall be recompacted and refinished at the sole expense of the Contractor. Excessive loss of moisture in the subgrade shall be preventeo by sprinkling, sealing or covering with a subsequent layer or granular material. Excessive loss of moisture shall be construed to exist when the subgrade soil moisture content is more than 4 percent below the optimum of compaction ratio density.

(3) **Rock Embankments.** Rock embankments shall be defined as those composed principally of rock, and shall be constructed of accepted material from approved sources.

Except as otherwise specified, rock embankments normally shall be constructed in successive layers for the full width of the individual roadway cross section and of 18 inches or less in depth. When, in the opinion of the Engineer, the rock sizes necessitate a greater depth of layer and the height of fill will permit, the layer depth may be increased as necessary, but in no case shall the depth of layer exceed 2-1/2 feet. Each layer shall be constructed by starting at one end and dumping the rock on top of the layer being constructed, then pushing the material ahead with an approved "Bulldozer" in such manner that the larger rock will be placed on the ground or preceding embankment layer and the interstices between the larger stones will be filled with small stones and spalls by this operation and from the placing of succeeding loads of material.

The maximum dimension of any rock used in embankment shall be less than the depth of the embankment layer, and in no case shall any rock over 2 feet in its greatest dimension be placed in the embankment. All oversized rock which is otherwise suitable for construction shall be broken to the required dimensions and utilized in embankment construction where proposed by plans, except that when preferred by the Contractor and acceptable to the Engineer, such rock may be placed at other points where the embankment layer is of greater depth, thus requiring less breakage. Compensation for additional haul involved in such alternate manipulations will not be allowed. Wasting of excavated rock other than that proposed by plans or ordered by the Engineer may be resorted to only upon written permission of the Engineer, which permission will be granted only upon agreement be-

tween the Contractor and the Engineer as to the point of disposal within the right of way or upon the presenting by the Contractor of written permission to place the material on property outside of the right of way. Where excavated rock is to be wasted under the procedure, cited above, the Contractor shall, at his entire expense, replace the rock so wasted with other suitable materials.

Unless otherwise provided, the upper or final layer of the embankment shall contain no stones larger than 4 inches in their greatest dimension, and, insofar as such is available by selection from the excavation, shall be composed of material so graded that the density and uniformity of the surface layer may be secured by the methods and requirements as set forth for "Ordinary Compaction" or "Density Control" method.

Exposed oversize material shall be reduced by sledging or other methods.

When the "Ordinary Compaction" method of compaction is specified, each embankment layer shall be rolled as directed, and where the embankment materials require, shall be sprinkled when and to the extent directed by the Engineer.

When the "Density Control" method of compaction is specified, each layer shall be compacted to the required density as outlined for "Earth Embankment", except in those layers where rock will make density testing difficult, the Engineer may require the layer to be proof rolled to insure proper compaction.

(4) **At Culverts and Bridges.** Embankments adjacent to culverts and bridges shall be compacted in the manner prescribed under Item "Structural Excavation" or other appropriate bid items.

(5) **Tolerances.** When tolerances are permitted by the plans, the limits establishing reasonably close conformity with the percent density specified is defined by the following:

The Engineer may accept the work providing not more than 25 percent of the density tests performed each day are outside the specified density by no more than 3 percentage points and where no two consecutive tests on continuous work are outside the specified limit.

132.3. **Selection of Materials.** In addition to the requirements in the excavation items of the specifications covering the general selection and utilization of materials to improve the roadbed, embankments shall be constructed in proper sequence to receive the select material layers shown on the plans, with such modifications as may be directed by the Engineer. The layer of embankment immediately preceding the upper layer of select material shall be constructed to the proper section and grade within a tolerance of not more than 0.10 foot from the established section and grade when properly compacted and finished to receive the select material layer.

132.4. Payment. Except as specified below, the work prescribed by this item will not be paid for directly, but shall be considered as subsidiary work pertaining to the several types and classes of excavation involved.

All sprinkling and rolling performed as required for "Ordinary Compaction" will be measured and paid for in accordance with the provisions governing the Items of "Sprinkling" and "Rolling" respectively. When the "Density Control" method of compaction is specified, required sprinkling and rolling performed will not be paid for directly but shall be considered as subsidiary to the several types and classes of excavation involved, except proof rolling as required will be paid for in accordance with the Item, "Rolling (Proof)".

When specific provisions are made in the plans for direct payment for blading embankment, all blading performed as required will be measured and paid for in accordance with the provisions governing the Item, "Blading". Measurement for payment will be made only after the material has been spread into the specified layers.

When provisions are not made in the plans for separate payment for blading embankments, such blading as necessary to satisfactorily complete the embankment in accordance with the requirements herein specified, will not be paid for directly but shall be considered as subsidiary work pertaining to the various items of embankment construction.

ITEM 140

OVERHAUL

140.1. Description. "Overhaul" shall consist of performing all operations necessary for moving previously excavated embankment materials over 1320 feet from designated or approved sources to the required points of disposal.

The "Haul Length" shall be the distance between the centers of mass of the material in its original and final positions, measured along the shortest practical haul route.

140.2. Measurement and Computation. Measurement of all materials for computing "Overhaul" will be made in the original position by the method of average end areas.

"Overhaul" will be computed by multiplying the number of cubic yards of material hauled by the "Haul Length" minus 1320 feet, converted to quarter miles and/or fractions thereof.

The unit of measurement for "Overhaul" will be the "Yard Quarter".

Hauling materials 1320 feet or less will be considered as "Free Haul" for which no direct compensation will be made.

140.3. Payment. All work performed and measured as provided under "Measurement" will be paid for at the unit price bid for "Overhaul", which price shall be full compensation for all labor, tools, equipment, and incidentals necessary to complete the work.

ITEM 150

BLADING

150.1. Description. "Blading" shall consist of blading those portions of the roadway so designated on plans, or as ordered by the Engineer.

Work performed under this item shall not include blading or other work specified for payment under other specification items.

150.2. Equipment. All equipment shall be approved by the Engineer prior to use and shall be able to efficiently produce the desired results. Equipment used for blading shall be a power maintainer and shall be tight and in good operating condition. The power maintainer shall have dual or four-wheel drive, shall be equipped with pneumatic tires, shall have a blade of not less than 12 feet in length, and a wheel base of not less than 16 feet. Unless the maintainer is equipped with a satisfactory scarifier attachment, a scarifier of approved type shall be provided.

150.3. Construction Methods. The work shall be performed on the designated portions of the roadway by the use of the equipment specified, which shall be operated by competent operators. All areas shall be completed to the section, line and grade shown on the plans, or established by the Engineer.

When necessary to loosen materials prior to blading, or at other points when so directed, the scarifier attachment or separate scarifier shall be used. When a separate scarifier is used, it shall be drawn by suitable power equipment of adequate tractive effort. Around and adjacent to structures, trees, and other obstructions where it is impractical to do the required work with a blade, such work shall be done by hand methods or other approved means.

The dragging, pushing, or scraping of materials along or across completed pavements will not be permitted.

150.4. Measurement. Work as prescribed by this item will be measured by the actual number of hours of blading or scarifying performed as ordered by the Engineer.

150.5. Payment. The work performed as prescribed by this item, and measured as provided under "Measurement", will be paid for at the unit price bid for "Blading", which price shall be full compensation for furnishing and operating all equipment, for all labor, fuel, materials, tools and incidentals necessary to complete the work.

All work required to be done by hand labor methods adjacent to structures, trees and other obstructions will not be paid for directly, but shall be considered as subsidiary work to this item.

ITEM 152

ROAD GRADER WORK

152.1. **Description.** "Road Grader Work" shall consist of the construction of a roadway in conformity with the typical cross sections shown on the plans when the topography is such that it will not be necessary to control the finished grade line for purposes other than to obtain a uniform riding surface and to provide the desirable earth cover over culverts. The limits of "Road Grader Work" shall be shown on the plans, and no section of "Road Grader Work" shall consist of less than 5 consecutive 100-foot stations.

The work shall be done in accordance with the specification requirements herein outlined. The work performed under this item shall not include work specified for payment under other specification items pertaining to the project.

152.2. **Construction Methods.** All undesirable materials shall first be removed from within the limits of the section to be graded and disposed of as directed by the Engineer. The roadway shall then be graded and shaped to the typical section shown on the plans and to a finished profile uniform and consistent with the topography and as indicated by the plans.

When required by the plans, "Road Grader Work" may be supplemented by "Scraper Work" and/or "Bulldozer Work" in accordance with the requirements of the governing specifications for these items.

During the shaping or manipulation of the roadbed, in the event insufficient moisture is present in the existing earth material, water shall be applied as necessary to facilitate compaction of the roadbed, by the method specified, prior to the placing of the base materials.

When the existing natural ground or the roadbed of an existing road is not in a uniformly compacted state, the existing ground or roadbed, as the case may be, shall be scarified for the full width of the new roadbed for a minimum depth of 6 inches and then sprinkled and rolled as directed by the Engineer, in conjunction with the new material placed on the roadbed and slopes, in order that the resultant subgrade will be uniformly compacted. Compaction shall be in accordance with the method specified on the plans and as outlined in the Item, "Embankment".

All equipment shall be operated by capable and efficient operators at the locations established by the Engineer to the extent, in the manner, and in the sequence of work as directed by the Engineer, all within the limits of "Road Grader Work" as shown on the plans.

152.3. **Measurement.** "Road Grader Work" will be measured by the 100-foot station.

152.4. **Payment.** The work performed as prescribed for this item and measured as provided under "Measurement" will be paid for at the unit price bid for "Road Grader Work (Ordinary Compaction)" or "Road Grader Work (Density Control)" as the case may be, which price shall be full compensation for all labor, tools, equipment, and incidentals necessary to complete the work, except as follows:

All "Scraper Work" and "Bulldozer Work", performed as required, will be paid for at the unit price bid for those items respectively.

When "Ordinary Compaction" is specified, "Sprinkling" and "Rolling", performed as required, will be paid for at the unit price bid for those items respectively.

When "Density Control" method of compaction is specified, "Sprinkling" and "Rolling" will not be paid for separately, but shall be considered as subsidiary work pertaining to the Item, "Road Grader Work".

ITEM 154

SCRAPER WORK

154.1. **Description.** "Scraper Work" shall consist of required excavation within the limits of the roadway as shown on plans or as directed by the Engineer; the removal and proper utilization or disposal of excavated materials; and the constructing, shaping, and finishing of earthwork, except as hereinafter specified, on the designated sections of the roadway and approaches to same, in conformity with the required lines, grades, and typical cross sections and in accordance with specification requirements herein outlined.

154.2. **Equipment.** Unless otherwise indicated by plans, the equipment shall consist of a scraper of not less than 8 cubic yards capacity (as rated loaded flush by the manufacturer) self propelled or drawn by suitable power equipment of adequate tractive effort. The equipment shall be capable of self loading to capacity or additional necessary power equipment shall be provided to push or pull the scraper unit to load to capacity. The scraper with the power unit or units shall be considered a scraper unit. All such equipment shall be tight and in good operating condition.

154.3. **Construction Methods.** "Scraper Work" shall be performed only on those portions of the road as shown on plans or designated by the Engineer.

The work shall be performed on the above sections by the use of the equipment specified, which shall be operated by competent and efficient operators.

All material placed under this item shall be constructed in successive layers, for the full width of the cross section where practicable, and in such lengths as are suited to the sprinkling and compaction methods utilized. Compaction shall be in accordance with the method specified on the plans and as outlined in the Item, "Embankment".

Where plans designate "Scraper Work" and "Blading" or "Road Grader Work" within the same limits, the "Scraper Work" shall be roughed in as directed by the Engineer and finished in accordance with specifications for the pertinent supplementing item.

154.4. **Measurement.** Work as prescribed by this item will be measured by the hour or by the yard hour. A scraper unit's cubic yard hour shall consist of the scraper's capacity in cubic yards (as rated loaded flush by the manufacturer or flush capacity as determined by the Engineer) multiplied by the actual number of hours of scraper work performed as directed by the Engineer.

154.5. **Payment.** The work performed as prescribed by this item, and measured as provided under "Measurement" will be paid for at the unit price bid for "Scraper Work (Ordinary Compaction)" or "Scraper Work (Density Control)" as the case may be, which price shall be full compensation for furnishing and operating all equipment, for all hauling, labor, fuel, materials, tools and incidentals necessary to complete the work, except that any "Blading" or "Road Grader Work" required to be performed on sections constructed under this item will be measured and paid for in accordance with specifications for those respective items.

When "Ordinary Compaction" is specified, "Sprinkling" and "Rolling", performed as required, will be paid for at the unit price bid for those items respectively.

When "Density Control" method of compaction is specified, "Sprinkling" and "Rolling" will not be paid for separately, but shall be considered as subsidiary work pertaining to the Item, "Scraper Work".

ITEM 156

BULLDOZER WORK

156.1. **Description.** "Bulldozer Work" shall consist of required excavation as shown on plans or as directed by the Engineer, the removal and proper utilization or disposal of excavated materials; and the constructing, shaping, and finishing of earthwork, except as hereinafter specified, in conformity with the required lines, grades, and typical cross sections and in accordance with specification requirements herein outlined.

156.2. Equipment. The equipment shall consist of a tractor with a bulldozer attachment, and where the work is of such nature as to require use of a heavy duty scarifier or ripper for efficient performance of the work, such attachments designed for operation with the required tractor shall also be furnished. The tractor shall be either of the crawler type or rubber tired type and shall be of adequate tractive effort to perform the work in an efficient manner. The bulldozer attachment shall have not less than an 8-foot blade. All equipment shall be tight and in good operating condition.

156.3. Construction Methods. "Bulldozer Work" shall be performed only on those portions of the road as shown on plans or designated by the Engineer.

The work shall be performed on the above sections by the use of the equipment specified, which shall be operated by competent and efficient operators.

All material placed under this item shall be constructed in successive layers, for the full width of the cross section where practicable, and in such lengths as are suited to the sprinkling and compaction methods utilized, and shall otherwise conform to the requirements of the governing specifications for the Item "Embankment".

Where plans designate "Bulldozer Work" and "Blading" or "Road Grader Work" within the same limits, the bulldozer work shall be roughed in as directed by the Engineer and finished in accordance with specifications for the pertinent supplementing item.

156.4. Measurement. Work prescribed by this item will be measured by the actual number of hours the equipment is operated either as a bulldozer or as a scarifier as directed by the Engineer.

156.5. Payment. The work performed as prescribed by this item, and measured as provided under "Measurement" will be paid for at the unit price bid for "Bulldozer Work (Ordinary Compaction)" or "Bulldozer Work (Density Control)" as the case may be, which price shall be full compensation for furnishing and operating all equipment, for all hauling, labor, fuel, materials, tools, and incidentals necessary to complete the work, except that any "Blading" or "Road Grader Work" required to be performed on sections constructed under this item will be measured and paid for in accordance with specifications for those respective items.

When "Ordinary Compaction" is specified, "Sprinkling" and "Rolling", performed as required, will be paid for at the unit price bid for those items respectively.

When "Density Control" method of compaction is specified "Sprinkling" and "Rolling" will not be paid for separately, but shall be considered as subsidiary work pertaining to the Item, "Bulldozer Work".

ITEM 158

EXCAVATION WORK FOR EROSION CONTROL

158.1. **Description.** This item shall consist of required excavation as shown on the plans or as directed by the Engineer and the removal and proper utilization or disposal of the excavated material, in conformity with the required lines, grades and typical cross sections and in accordance with specification requirements herein outlined.

158.2. **Equipment.** The equipment will consist of the following equipment as specified on the plans. All equipment shall be tight and in good operating condition.

(1) **Dragline.** The equipment shall be either track or wheel mounted and shall be self-propelled. It shall be equipped with a bucket of 1/2 cubic yard capacity or more.

(2) **Backhoe.** The equipment shall be a tractor mounted backhoe capable of excavating a trench at least 12 inches wide in one pass. The tractor may be of either the track mounted or the wheel mounted variety.

(3) **Excavator.** The equipment shall consist of a hydraulic excavator with a retractable, telescoping, rotatable boom and attached interchangeable excavating or grading bucket of not less than 36 inch width. The entire excavating mechanism shall be mounted on a platform which rotates on a turntable assembly either truck or crawler mounted for mobility and shall be of adequate tractive effort and with sufficient power to perform the work in an efficient manner.

(4) **Front End Loader.** The equipment shall consist of a tractor mounted front end loader with a minimum bucket capacity of 1-1/4 cubic yards. The tractor may be of either the track mounted or wheel mounted variety.

158.3. **Construction Methods.** The work shall be performed only at those locations as shown on the plans or as designated by the Engineer by use of the equipment specified. All excavated material will be disposed of in a manner satisfactory to the Engineer.

Materials placed in the embankment shall conform to the requirements of the Item "Embankment".

158.4. **Measurement.** Work as prescribed by this item will be measured by the actual number of hours the equipment is operated as directed by the Engineer or by the cubic yards excavated.

When measurement is by the cubic yard, it will be measured in its original position and the volume computed by the method of average end areas.

158.5. **Payment.** The work performed as prescribed by this item, and measured as provided under "Measurement", will be paid at the unit price bid for, "Dragline Work (Erosion Control)", "Backhoe Work (Erosion Control)", "Excavator Work (Erosion Control)", or "Front End Loader Work (Erosion Control)" as specified on the plans which price shall be full compensation for furnishing and operating all equipment; for all hauling and utilization or disposal of excavated material and for all labor, fuel, materials, tools and incidentals necessary to complete the work.

ITEM 160

FURNISHING AND PLACING TOPSOIL

160.1. **Description.** "Furnishing and Placing Topsoil" shall consist of furnishing and placing approved selected topsoil to the depths and area indicated on the plans or as directed by the Engineer.

160.2. **Material.** The topsoil shall be fertile loam, easily cultivated and free from objectionable material, and shall have a relatively high erosion resistance and be readily able to support the growth of the planting, seeding or sodding specified on the plans.

160.3. **Sources.** The topsoil may be obtained from the right of way at sites of proposed excavation or embankments, when indicated on the plans or designated by the Engineer; or, it may be obtained from sources outside the right of way, secured by the Contractor, which meet the approval of the Engineer.

160.4. **Construction Methods.**

(1) **Right of Way Sources.** The existing topsoil shall be moved from within the limits of construction as indicated on the plans and stockpiled in a windrow along the right of way line, or at designated locations, or spread over an area that is ready for topsoil application in accordance with the plans or as directed by the Engineer.

(2) **Contractor-Obtained Sources.** The Engineer shall be notified sufficiently in advance of the opening of any material source to permit inspection and to prepare for necessary checking and measurement. Only material which meets the approval of the Engineer shall be removed from the source for use on the project.

Trash, wood, brush, stumps and other objectionable materials encountered shall be removed and disposed of as directed by the Engineer prior to beginning of work required by this item. The source and stockpile areas

shall be kept drained, insofar as practicable, during the period of removal of the topsoil material, and the source areas and stockpile areas shall be left in a neat and presentable condition upon completion of the removal of all material required.

The selected topsoil material shall be used to improve designated areas for planting, seeding or sodding purposes as directed by the Engineer. Payment will not be allowed for any material which is used for purposes other than those designated.

The spreading of the topsoil shall be undertaken as soon as the grading operations have been completed or at such time as specified by the Engineer. The topsoil shall be spread, as directed by the Engineer, so as to form a cover of uniform thickness as shown on the plans. After topsoil has been placed and shaped, it shall be sprinkled and/or rolled if directed by the Engineer.

160.5. Measurement. Furnishing and placing topsoil will be measured by the 100 foot station, by the square yard complete in place, by the cubic yard in vehicles at the point of delivery, or when shown on the plans, by the cubic yard in the stockpile or in original position in the source as computed by the method of average end areas.

160.6. Payment. Work and accepted material as prescribed for this item, measured in accordance with the method indicated on the plans and proposal and in accordance with the applicable provisions of "Measurement", will be paid for at the unit price bid for "Furnishing and Placing Topsoil" which price shall be full compensation for securing a source necessary and any royalty involved; for furnishing all materials, for all excavation (except as noted below), loading, hauling, stockpiling and placing; and for furnishing all labor, equipment, tools, supplies and incidentals necessary to complete the work, except sprinkling and rolling.

All sprinkling and rolling performed as required will be measured and paid for in accordance with the Items of "Sprinkle Irrigation" and "Rolling", respectively.

Excavation required by this item in cut sections will be measured and paid for in accordance with the provisions of the various excavation items involved, with the provision that excavation will be measured and paid for once only, regardless of the manipulations involved.

Excavation which will be paid for directly, in accordance with the various excavation items involved, will include the original in-place volume of topsoil salvaged from cut sections, as well as the additional volume of excavation made necessary for placing the topsoil, in cut areas. Excavation, for topsoil, in areas upon which embankment will be placed will neither be measured nor paid for directly; its cost will be included in the unit price bid for this item. The foregoing provisions are depicted in Figure 1.

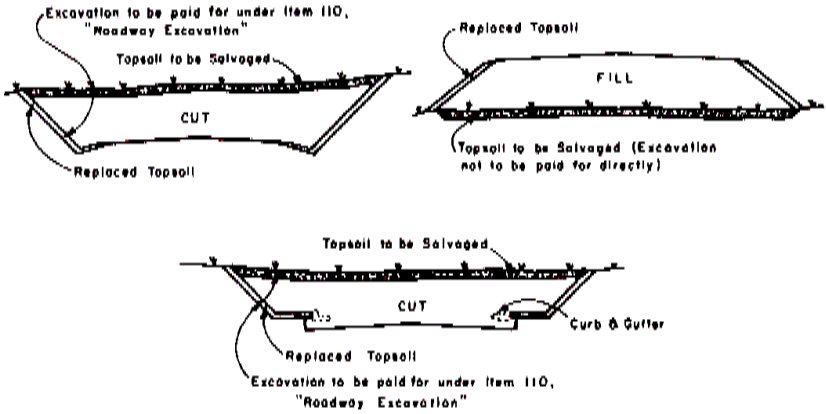

Roadway Cross Sections Showing Payment for Excavation

Figure 1

ITEM 162

SODDING FOR EROSION CONTROL

162.1. **Description.** "Sodding for Erosion Control" shall consist of providing and planting Bermudagrass or other acceptable sod along or across such areas as are designated on the plans and in accordance with specification requirements herein outlined.

Planting Season. All planting shall be done between the average date of the last freeze in the spring and six weeks prior to the average date for the first freeze in the fall according to the Texas Almanac or U.S. Weather Bureau for the area in which the project is located except as specifically authorized in writing.

162.2. **Materials.** The sod shall consist of live, growing Bermudagrass or other acceptable sod secured from sources as approved by the Engineer. Bermudagrass sod, St. Augustine sod, or other sod as shown on the plans, shall have a healthy virile root system of dense, thickly matted roots throughout the soil of the sod for a minimum thickness of 1 inch. The Contractor shall not use sod from areas where the grass is thinned out, nor where the grass roots have been dried out by exposure to the air and sun to such an extent as to damage its ability to grow when transplanted. The sod shall be free from noxious weeds or other grasses and shall not contain any matter deleterious to its growth or which might affect its subsistence or hardiness when transplanted. Unless the area has been closely pastured, it shall be closely mowed and raked to remove all weeds and long-standing stems.

Care shall be taken at all times to retain the native soil on the roots of the sod during the process of excavating, hauling and planting. Sod material shall be kept moist from the time it is dug until planted. When so directed by the Engineer, the sod existing at the source shall be watered to the extent required prior to excavating.

Fertilizer shall conform to the requirements of the Item, "Fertilizer".

Straw mulch shall be oat, wheat, or rice straw. Hay mulch shall be prairie grass, Bermudagrass, or other hay as approved by the Engineer. The mulch shall be free of Johnsongrass or other noxious weeds and foreign materials. It shall be kept in a dry condition and shall not be molded or rotted.

Tacking agents for mulch shall be of the type and grade shown on the plans. Asphaltic material, if used, shall conform to the requirements of the Item "Asphalt, Oils and Emulsions".

162.3. **Construction Methods.** After the designated areas have been completed to the lines, grades, and cross sections shown on the plans and as provided for in other items of this contract, sodding of the type specified shall be performed in accordance with the requirements hereinafter described.

(1) **Watering.** The sodded areas shall be watered at such times and in the manner and quantity as directed by the Engineer.

(2) **Finishing.** Where applicable, the shoulders, slopes and ditches shall be smoothed, after planting has been completed, and shaped to conform to the desired cross sections. Any excess soil from planting operations shall be spread uniformly over adjacent areas or disposed of as directed by the Engineer so that the completed surfaces will present a neat appearance.

162.4. **Spot Sodding.**

(1) **Bermudagrass.** Furrows parallel to the roadway and approximately 5 inches deep and 18 inches on centers shall be opened on areas to be sodded. In two furrows adjacent to the roadways, sod shall form a continuous row not less than 3 inches wide. In all other furrows, sod approximately 3 inches square shall be placed on 15 inch centers.

Unless otherwise indicated on the plans, fertilizer shall be applied uniformly in the furrows or rows in accordance with the applicable provisions of the Item, "Fertilizer".

(2) **St. Augustine.** Prior to planting, the area to be sodded shall be shaped by blading or other approved methods to the final finish desired. St. Augustine grass sod shall be not less than 3 inches square and shall be planted on a maximum of 18 inch centers. Planting of the sod may be in furrows of uniform depth or in holes of like depth. Sod shall be placed so that

when it has been firmed against the bottom of the furrow or hole, the top of the sod shall not be more than 1/2 inch below finished grade. Soil shall be firmed against all sides of the sod and covering of the sod will not be permitted except for small amounts of soil incidental to raking or leveling, provided the quantity of soil is not enough to hinder growth in the opinion of the Engineer. Unless otherwise indicated on the plans, fertilizer shall be applied uniformly in the furrows or holes in accordance with the applicable provisions of the Item, "Fertilizer".

162.5. **Block Sodding.** At locations shown on plans or where directed, sod blocks shall be carefully placed on the prepared areas. The fertilizer shall then be applied in accordance with the applicable provisions of the Item, "Fertilizer" and thoroughly watered. When sufficiently dry, the sodded area shall be rolled or tamped to form a thoroughly compacted, solid mat. Any voids left in the block sodding shall be filled with additional sod and tamped. Surfaces of block sod, which, in the opinion of the Engineer, may slide due to the height and slope of the surface or nature of the soil, shall, upon direction of the Engineer, be pegged with wooden pegs, or other methods as approved by the Engineer, driven through the sod blocks into firm earth sufficiently close to hold the block sod firmly in place. Edges along curbs and drives, walkways, etc., shall be carefully trimmed and maintained until accepted.

162.6. **Grass Retards.** Trenches shall be excavated across the side ditches or along the side or back slopes to the lines and dimensions shown on plans. After the trenches have been prepared, they shall be filled with sod blocks to an elevation flush with the adjacent ground surface. The fertilizer shall then be applied in accordance with the applicable provisions of the Item "Fertilizer", and thoroughly watered. When sufficiently dry, the sodded area shall be rolled or tamped to form a thoroughly compacted, solid mat. Any voids left between the sod blocks shall be filled with additional sod and tamped.

162.7. **Mulch Sodding.** The sod source shall be disked in two directions cutting the sod thoroughly to a depth of not less than 4 inches. Sod material shall be excavated to a depth of not less than 4 inches or more than 10 inches, being careful to avoid having soil containing no grass roots. The disked sod may be windrowed, or otherwise handled in a manner satisfactory to the Engineer. The material shall be rejected if not kept in a moist condition.

Prior to placing mulch sod, the cut slopes shall be scarified by plowing furrows 4 inches to 6 inches deep along horizontal slope lines at 2-foot vertical intervals. Excavated material from the furrows shall not protrude more than 3 inches above the original surface of the cut. Fertilizer shall be distributed uniformly over the area in accordance with the applicable provi-

sions of the Item, "Fertilizer". The sod shall then be dumped upon the prepared area and spread uniformly to the required approximate thickness shown on plans.

Any section not true to lines and cross sections shall be remedied by the addition of sod material or by reshaping the material to meet the requirements of "Finishing" in Subarticle 162.3.(2). After the sod material has been spread and shaped, it shall be compacted with a corrugated roller of the "Cultipacker" type. All rolling of slope areas shall be on the contour.

162.8. Straw Mulch or Hay Mulch. Where applicable, "Spot Sodding", and "Mulch Sodding" shall have straw or hay mulch spread uniformly over the area as indicated on the plans, or as directed by the Engineer. The rate of application shall be 1-1/2 to 2 tons of hay or 2 to 2-1/2 tons of straw per acre.

A mulching machine approved by the Engineer shall be equipped to inject tacking agent uniformly into the mulch as it leaves the equipment at a rate of 0.05 to 0.10 gallons of tacking agent per square yard of mulched area or as directed by the Engineer. If the mulch and tacking agent are placed by hand, then the rate of application for the tacking agent shall be approximately 0.15 gallons per square yard of mulched area.

162.9. Measurement. Work and acceptable material for "Spot Sodding", "Block Sodding", "Grass Retards" and "Straw or Hay Mulch" will be measured by the square yard complete in place. Work and acceptable material for "Mulch Sodding" will be measured by the square yard complete in place or by the cubic yard in vehicles as delivered to the place of planting.

162.10. Payment. The work performed and materials furnished and measured as provided under "Measurement" will be paid for at the unit price bid for "Spot Sodding", "Block Sodding", "Grass Retards", "Straw or Hay Mulch", or "Mulch Sodding", as the case may be, which prices shall each be full compensation for completing the work except as follows:

All water, except that used for maintaining and preparing the sod prior to planting, will be measured and paid for in accordance with the provisions governing the Item, "Sprinkle Irrigation".

Water used for preparing the sod for digging and keeping the sod moist from the source until it is planted shall be considered subsidiary to the various pay items involved.

Fertilizer used as indicated on the plans or as directed by the Engineer shall be measured and paid for in accordance with the Item, "Fertilizer".

ITEM 164

SEEDING FOR EROSION CONTROL

164.1. Description. "Seeding for Erosion Control" shall consist of preparing ground, providing for sowing of seeds, mulching with straw, hay, or cellulose fiber and other management practices along and across such areas as are designated on the plans and in accordance with these specifications.

164.2. Materials. All seed must meet the requirements of the Texas Seed Law including the labeling requirements for showing pure live seed, (PLS = purity x germination), name and type of seed. Seed furnished shall be of the previous season's crop and the date of analysis shown on each bag shall be within nine months of the time of use on the project. Each variety of seed shall be furnished and delivered in separate bags or containers. A sample of each variety of seed shall be furnished for analysis and testing when directed by the Engineer. The amount of seed planted per acre shall be of the type specified below. Buffalograss shall be treated with a fungicide approved by the Engineer.

Common Name	Scientific Name
Green Sprangletop	Leptochloa dubia
Sideoats Grama (El Reno or Premier)	Bouteloua curtipendula
Blue Grama (Texas Grown)	Bouteloua gracilis
Buffalograss (Treated)	Buchloe dactyloides
Western Wheatgrass	Agropyron smithii
Blackwell Switchgrass	Panicum virgatum
Caucasian Bluestem	Andropogon caucasicus
K.R. Bluestem	Andropogon ischaemum
Lehmann Lovegrass	Eragrostis lehmanniana
Buffelgrass	Pennisetum ciliare
Rhodesgrass	Chloris gayana
Bermuda and Giant Bermudagrass (Hulled)	Cynodon dactylon
Sand Dropseed	Sporobolus cryptandrum
Bahiagrass (Pensacola)	Paspalum notatum
Weeping Lovegrass	Eragrostis curvula
Sand Bluestem	Andropogon hallii

Planting Season. All planting shall be done between the dates specified for each highway district except as specifically authorized in writing.

The pure live seed planted per acre shall be of the type specified with the mixture, rate and planting dates as follows except as specifically shown on plans:

District and Planting Dates	Mixture for Clay or Tight Soils (All Sections)	Mixture for Clay or Tight Soils	Mixture for Sand or Sandy Soils (All Sections)
1 Jan. 1 to June 1	Green Sprangletop, 1.2 lbs. Bermudagrass, 6.9 lbs. K.R. Bluestem, 1.0 lb.		Green Sprangletop, 1.2 lbs. Bermudagrass, 6.9 lbs. Bahiagrass (Paneacola), 10.8 lbs.
	(Eastern Section)	(Western Section) Blackwell Switchgrass, 2.0 lbs.	
2—Jan. 1 to May 15	Green Sprangletop, 1.2 lbs. K.R. Bluestem, 1.0 lb. Sideoats Grama (El Reno), 0.5 lb. Bermudagrass, 6.9 lbs.	Green Sprangletop, 1.2 lbs. K.R. Bluestem, 1.0 lb. Sideoats Grama (El Reno), 0.5 lb. Lehmann Lovegrass, 0.7 lb. Buffalograss, 1.2 lbs.	Green Sprangletop, 1.2 lbs. K.R. Bluestem, 1.0 lb. Sideoats Grama (El Reno), 0.5 lb. Bermudagrass, 6.9 lbs.
	(Eastern Section)	(Western Section)	
3—Jan. 1 to June 1	Green Sprangletop, 1.2 lbs. Sideoats Grama (El Reno), 0.5 lb. Bermudagrass, 6.9 lbs. Buffalograss, 1.2 lbs.	Green Sprangletop, 1.2 lbs. Sideoats Grama (El Reno), 0.5 lb. Western Wheatgrass, 2.2 lbs. Buffalograss, 1.2 lbs.	Green Sprangletop, 1.2 lbs. Sideoats Grama (El Reno), 0.5 lb. Bermudagrass, 6.9 lbs. Buffalograss, 1.2 lbs.
4—Jan. 15 to June 15	Green Sprangletop, 1.2 lbs. Sideoats Grama (El Reno), 0.5 lb. Blue Grama, 2.4 lbs. Buffalograss, 1.2 lbs.		Green Sprangletop, 1.2 lbs. Sideoats Grama (El Reno), 0.5 lb. Blue Grama, 2.4 lbs. Buffalograss, 1.2 lbs.
5—Jan. 15 to June 15	Green Sprangletop, 1.2 lbs. Sideoats Grama (El Reno), 0.5 lb. Blue Grama, 2.4 lbs. Buffalograss, 1.2 lbs.		Green Sprangletop, 1.2 lbs. Sideoats Grama (El Reno), 0.5 lb. Blue Grama, 2.4 lbs. Buffalograss, 1.2 lbs.
6—Jan. 1 to May 15 (NE Half of Dist.)	Green Sprangletop, 1.2 lbs. Blue Grama, 2.4 lbs. Lehmann Lovegrass, 0.7 lb. Sand Dropseed, 1.0 lb. Buffalograss, 1.2 lbs.		Green Sprangletop, 1.2 lbs. Blue Grama, 2.4 lbs. Lehmann Lovegrass, 0.7 lb. Sand Dropseed, 1.0 lb. Buffalograss, 1.2 lbs.
7—Jan. 1 to May 15	Green Sprangletop, 1.2 lbs. Buffalograss, 1.2 lbs. K.R. Bluestem, 1.0 lb. Lehmann Lovegrass, 0.7 lb.		Green Sprangletop, 1.2 lbs. Buffalograss, 1.2 lbs. K.R. Bluestem, 1.0 lb. Lehmann Lovegrass, 0.7 lb.
8—Jan. 1 to May 15	Green Sprangletop, 1.2 lbs. Buffalograss, 1.2 lbs. Sideoats Grama (El Reno), 0.5 lb. K.R. Bluestem, 1.0 lb. Lehmann Lovegrass, 0.7 lb.		Green Sprangletop, 1.2 lbs. Buffalograss, 1.2 lbs. Sideoats Grama (El Reno), 0.5 lb. K.R. Bluestem, 1.0 lb. Lehmann Lovegrass, 0.7 lb.
	(E. of IH 35)	(W. of IH 35)	
9—Jan. 1 to May 15	Green Sprangletop, 1.2 lbs. Bermudagrass, 6.9 lbs. K.R. Bluestem, 1.0 lb.	Green Sprangletop, 1.2 lbs. Sideoats Grama (Premier), 0.5 lb. K.R. Bluestem, 1.0 lb. Buffalograss, 1.2 lbs.	Green Sprangletop, 1.2 lbs. Bermudagrass, 6.9 lbs. K.R. Bluestem, 1.0 lb. Buffalograss, 1.2 lbs.

District and Planting Dates	Mixture for Clay or Tight Soils	Mixture for Clay or Tight Soils	Mixture for Sand or Sandy Soils
10—Jan. 1 to May 15	Green Sprangletop, 1.2 lbs. Bermudagrass 6.9 lbs.		Green Sprangletop, 1.2 lbs. Bermudagrass, 6.9 lbs. Bahiagrass (Pensacola), 10.8 lbs.
11—Jan. 1 to May 15	Green Sprangletop, 1.2 lbs. Bermudagrass, 6.9 lbs.		Green Sprangletop, 1.2 lbs. Bermudagrass, 6.9 lbs. Bahiagrass (Pensacola), 10.8 lbs.
12—Dec. 1 to May 1 & HU	Bermudagrass, 6.9 lbs. K.R. Bluestem, 1.0 lb. Bahiagrass (Pensacola), 8.6 lbs.		Bermudagrass, 6.9 lbs. K.R. Bluestem, 1.0 lb. Bahiagrass (Pensacola) 8.6 lbs.
13—Dec. 1 to May 1	Bermudagrass, 6.9 lbs. K.R. Bluestem, 1.0 lb. Bahiagrass (Pensacola), 8.6 lbs.		Bermudagrass, 6.9 lbs. K.R. Bluestem, 1.0 lb. Bahiagrass (Pensacola), 8.6 lbs.
14—Jan. 1 to May 15	(E. of IH 35) Green Sprangletop, 1.2 lbs. Bermudagrass, 6.9 lbs. K.R. Bluestem, 1.0 lb.	(W. of IH 35) Green Sprangletop, 1.2 lbs. Buffalograss, 1.2 lbs. K.R. Bluestem, 1.0 lb. Buffalograss, 1.2 lbs.	Green Sprangletop, 1.2 lbs. K.R. Bluestem, 1.0 lb. Bermudagrass, 6.9 lbs. Buffalograss, 1.2 lbs.
15—Dec. 1 to May 1	(E. of US 281) Green Sprangletop, 1.2 lbs. Sideoats Grama (Premier), 0.5 lb. Bermudagrass, 6.9 lbs. K.R. Bluestem, 1.0 lb.	(W. of US 281) Green Sprangletop, 1.2 lbs. Sideoats Grama (Premier), 0.5 lb. K.R. Bluestem, 1.0 lb. Buffalograss, 1.2 lbs.	Green Sprangletop, 1.2 lbs. Bermudagrass, 6.9 lbs. K.R. Bluestem, 1.0 lb. Buffelgrass, 4.0 lbs. Buffalograss, 1.2 lbs.
16—Dec. 1 to May 1	(E. of US 77) Green Sprangletop, 1.2 lbs. Bermudagrass, 6.9 lbs. K.R. Bluestem, 1.0 lb. Buffalograss, 1.2 lbs.	(W. of US 77) Green Sprangletop, 1.2 lbs. Rhodesgrass, 0.8 lb. K.R. Bluestem, 1.0 lb. Buffalograss, 1.2 lbs.	Green Sprangletop, 1.2 lbs. Bermudagrass, 6.9 lbs. K.R. Bluestem, 1.0 lb. Buffelgrass, 4.0 lbs. Buffalograss, 1.2 lbs.
17—Jan. 1 to May 15	Green Sprangletop, 1.2 lbs. Bermudagrass, 6.9 lbs. K.R. Bluestem, 1.0 lb.		Green Sprangletop, 1.2 lbs. Bermudagrass, 6.9 lbs. K.R. Bluestem, 1.0 lb.
18—Jan. 1 to May 15	Green Sprangletop, 1.2 lbs. Bermudagrass, 6.9 lbs. K.R. Bluestem, 1.0 lb. Buffalograss, 1.2 lbs.		Green Sprangletop, 1.2 lbs. Bermudagrass, 6.9 lbs. K.R. Bluestem, 1.0 lb. Buffalograss, 1.2 lbs.
19—Jan. 1 to June 1	Green Sprangletop, 1.2 lbs. Bermudagrass, 6.9 lbs.		Green Sprangletop, 1.2 lbs. Bermudagrass, 6.9 lbs. Bahiagrass (Pensacola), 10.8 lbs.
20—Dec. 1 to May 1	Green Sprangletop, 1.2 lbs. Bermudagrass, 6.9 lbs.		Green Sprangletop, 1.2 lbs. Bermudagrass, 6.9 lbs. Bahiagrass (Pensacola), 10.8 lbs.
21—Dec. 1 to May 1	(E. of US 281) Green Sprangletop, 1.2 lbs. Bermudagrass, 6.9 lbs. K.R. Bluestem, 1.0 lbs. Buffalograss, 1.2 lbs.	(W. of US 281) Green Sprangletop, 1.2 lbs. Sideoats Grama (Premier), 0.5 lb. K.R. Bluestem, 1.0 lb. Buffalograss, 1.2 lbs.	Green Sprangletop, 1.2 lbs. Bermudagrass, 6.9 lbs. K.R. Bluestem, 1.0 lb. Buffelgrass, 4.0 lbs. Buffalograss, 1.2 lbs.

District and Planting Dates	Mixture for Clay or Tight Soils	Mixture for Clay or Tight Soils	Mixture for Sand or Sandy Soils
23—Jan. 1 to May 15	Green Sprangletop, 1.2 lbs. Buffalograss, 1.2 lbs. K.R. Bluestem, 1.0 lb. Lehmann Lovegrass, 0.7 lb.		Green Sprangletop, 1.2 lbs. K.R. Bluestem, 1.0 lb. Lehmann Lovegrass, 0.7 lb. Buffalograss, 1.2 lbs.
24—Jan. 1 to June 1	Green Sprangletop, 2.2 lbs. Buffalograss, 1.2 lbs. Blue Grama, 2.4 lbs. Lehman Lovegrass, 0.7 lb. Sand Dropseed, 1.0 lb.		Green Sprangletop, 2.2 lbs. Buffalograss, 1.2 lbs. Blue Grama, 2.4 lbs. Lehman Lovegrass, 0.7 lb. Sand Dropseed, 1.0 lb.
25—Jan. 1 to June 1	Green Sprangletop, 1.2 lbs. Sideoats Grama (El Reno), 0.5 lb. Caucasian Bluestem, 0.5 lb. Western Wheatgrass, 2.2 lbs. Buffalograss, 1.2 lbs.		Green Sprangletop, 1.2 lbs. Sideoats Grama (El Reno), 0.5 lb. Caucasian Bluestem, 0.5 lb. Buffalograss, 1.2 lbs. Western Wheatgrass, 2.2 lbs.

Fertilizer shall conform to the requirements of the Item "Fertilizer". The fertilizer used shall have the analysis shown on the plans.

Straw Mulch shall be oat, wheat, or rice straw. Hay Mulch shall be prairie grass, Bermudagrass, or other hay as approved by the Engineer. The mulch shall be free of Johnsongrass or other noxious weeds and foreign materials. It shall be kept in a dry condition and shall not be molded or rotted.

Cellulose Fiber Mulch shall be natural cellulose fiber mulch produced from grinding clean, whole wood chips, or fiber produced from ground newsprint with a labeled ash content not to exceed 7%. The mulch shall be designed for use in conventional mechanical planting, hydraulic planting of seed or hydraulic mulching of grass seed, either alone or with fertilizers and other additives. The mulch shall be such that when applied the material shall form a strong, moisture-retaining mat without the need of an asphalt binder.

164.3. Construction Methods. After the designated areas have been completed to the lines, grades and cross sections shown on the plans and as provided for in other items of this contract, seeding shall be performed in accordance with the requirements hereinafter described. All areas to be seeded shall be cultivated to a depth of at least 4 inches. The seedbed shall be cultivated sufficiently to reduce the soil to a state of good tilth when the soil particles on the surface are small enough and lie closely enough together to prevent the seed from being covered too deep for optimum germination. Cultivation of seedbed will not be required in loose sand where depth of sand is four inches or more.

The cross-section previously established shall be maintained throughout the process of cultivation and any necessary reshaping shall be done prior to any planting of seed.

164.4. Broadcast Seeding. The seed or seed mixture in the quantity specified shall be uniformly distributed over the areas shown on plans or where directed by the Engineer. If the sowing of seed is by hand, rather than by mechanical methods, the seed shall be sown in two directions at right angles to each other. If mechanical equipment is used, all varieties of seed as well as fertilizer may be distributed at the same time provided that each component is uniformly applied at the specified rate. When seed and fertilizer are to be distributed as a water slurry, the mixture shall be applied to the area to be seeded within 30 minutes after all components are placed in the equipment. After planting, the planted area shall be rolled with a corrugated roller of the "Cultipacker" type. All rolling of the slope areas shall be on the contour.

164.5. Straw or Hay Mulch Seeding. The seed or seed mixture in the quantity specified shall be uniformly distributed over the areas shown on plans or where directed. If the sowing of seed is by hand, rather than by mechanical methods, the seed shall be sown in two directions at right angles to each other. If mechanical equipment is used, all varieties of seed as well as fertilizer may be distributed at the same time provided that each component is uniformly applied at the specified rate. When seed and fertilizer are to be distributed as a water slurry, the mixture shall be applied to the area to be seeded within 30 minutes after all components are placed in the equipment. Upon completion of planting of the seed, straw or hay mulch shall be spread uniformly over the seeded area at the rate of approximately 1-1/2 to 2 tons of hay or 2 to 2-1/2 tons of straw per acre. A mulching machine approved by the Engineer shall be equipped to inject a tacking agent into the straw or hay uniformly as it leaves the equipment at a rate of 0.05 to 0.10 gallon of tacking agent per square yard of mulched area. If the straw or hay and tacking agent are placed by hand, then the rate of application for the tacking agent shall be approximately 0.15 gallon per square yard.

164.6. Cellulose Fiber Mulch Seeding. The seed or seed mixture, in the quantity specified, shall be uniformly distributed over the areas shown on the plans or where directed. If the sowing of seed is by hand, rather than by mechanical methods, the seed shall be sown in two directions at right angles to each other. If mechanical equipment is used all varieties of seed as well as fertilizer may be distributed at the same time, provided that each component is uniformly applied at the specified rate. When seed and fertilizer are to be distributed as a water slurry, the mixture shall be applied to that area to be seeded within 30 minutes after all components are placed in the equipment. Upon completion of planting of the seed, cellulose fiber mulch shall be spread uniformly over the area at the following rates:

Sandy soils with flat surfaces - min. 2000 lbs/acre
Sandy soils with slope surfaces - min. 2300 lbs/acre
Clay soils with flat surfaces - min. 2500 lbs/acre
Clay soils with slope surfaces - min. 3000 lbs/acre

"Flat" and "slope" surfaces shall be as shown on the plans.

The rates are given in dry weight of mulch per acre. A mulching machine, approved by the Engineer, shall be equipped to eject the thoroughly wet mulch material at a uniform rate to provide the mulch coverage specified.

164.7. Accent Seeding. In Districts 1, 10, 11, 12, 17, 19, and 20, over areas shown on plans or where directed by the Engineer, weeping lovegrass seed shall be uniformly distributed at the rate of 3 pounds (PLS) per acre. If the sowing of seed is by hand, rather than by mechanical methods, the seed shall be sown in two directions at right angles to each other. If mechanical equipment is used, the seed as well as fertilizer may be distributed at the same time, provided that each component is uniformly applied at the specified rate. When seed and fertilizer are to be applied in a water slurry, the mixture shall be applied to the area to be seeded within 30 minutes after all components are placed in the equipment.

164.8. Straw or Hay Mulch. Mulch shall be spread uniformly over the area indicated on plans or as designated by the Engineer at the rate of approximately 1-1/2 to 2 tons of hay or 2 to 2-1/2 tons of straw per acre. A mulching machine approved by the Engineer shall be equipped to inject a tacking agent into the straw or hay uniformly as it leaves the equipment at a rate of 0.05 to 0.10 gallon of tacking agent per square yard of mulched area. If the tacking agent is placed by hand, then the rate of application for tacking agent shall be approximately 0.15 gallon per square yard.

164.9. Seeding for Temporary Erosion Control. When specified on the plans or directed by the Engineer, temporary erosion control measures shall be performed. These measures shall consist of the sowing of cool season plant seeds and the work and materials as required in "Construction Methods" and "Straw or Hay Mulch". These measures shall be performed over the areas shown on the plans or where directed by the Engineer. Temporary erosion control measures shall be performed in addition to other "Seeding for Erosion Control" as herein specified. The pure live seed, of the cool season plants, planted per acre shall be of the type specified, with the mixture, rate and planting dates as follows, except as specifically shown on the plans:

Common Name	Scientific Name	Rate
Annual Rye	Lolium multiflorum	1.0 lb.
Tall Fescue	Festuca arundinacea	1.0 lb.
Western Wheatgrass	Agropyron smithii	2.0 lbs.
Oats	Avena sativa	4.0 lbs.
Wheat	Triticum aestiuum	4.0 lbs.
Texas Bluebonnet	Lupinus subcarnosus	15.0 lbs.
White Clover	Trifolium repens	1.0 lb.
Hairy Vetch	Vicia villosa	13.0 lbs.
Crimson Clover	Trifolium incarnatum	1.0 lb.
Sudangrass	Sorghum Vulgare var. sudanense	2.0 lbs.

All seed shall be treated with a fungicide; additionally, all legumes shall be innoculated.

164.10. Measurement. Work and acceptable materials for "Broadcast Seeding", "Straw or Hay Mulch Seeding", "Cellulose Fiber Mulch Seeding (Flat)", "Cellulose Fiber Mulch Seeding (Slope)", "Accent Seeding", "Straw or Hay Mulch", and "Seeding for Temporary Erosion Control" will be measured by the square yard or by the acre, complete in place.

164.11. Payment. The work performed and materials furnished and measured as provided under "Measurement" will be paid for at the unit price bid for "Broadcast Seeding", "Straw or Hay Mulch Seeding", "Cellulose Fiber Mulch Seeding (Flat)", "Cellulose Fiber Mulch Seeding (Slope)", "Accent Seeding", "Straw or Hay Mulch", or "Seeding for Temporary Erosion Control", of the type specified, as the case may be, which prices shall be full compensation for furnishing all materials, including water for seed—fertilizer slurry and hydraulic mulching, and for performing all operations necessary to complete the work except as follows:

All fertilizer will be measured and paid for in accordance with the provisions governing the Item "Fertilizer".

Water for irrigating the cultivated area or seedbed, when required, shall meet the requirements of, and will be measured and paid for in accordance with, the provisions of the Item "Sprinkle Irrigation".

ITEM 166

FERTILIZER

166.1. Description. "Fertilizer" shall consist of providing and distributing fertilizer over such areas as designated on the plans and in accordance with these specifications.

166.2. Materials. All fertilizer used shall be delivered in bags or containers clearly labeled showing the analysis. The fertilizer is subject to testing by the Texas Department of Agriculture in accordance with the Texas Fertilizer Law. A pelleted or granulated fertilizer shall be used which has the analysis shown on the plans. The figures in the analysis represent the percent of nitrogen, phosphoric acid, and potash nutrients respectively as determined by the methods of the Association of Official Agricultural Chemists. Fifty percent or greater of the Nitrogen required shall be in the form of Nitrate Nitrogen (NO_3). The remaining Nitrogen required may be in the form urea Nitrogen ($CO(NH_2)_2$).

In the event it is necessary to substitute a fertilizer of a different analysis, it shall be a pelleted or granulated fertilizer with a lower concentration, but the total amount of nutrients furnished and applied per acre shall equal or exceed that specified for each nutrient.

166.3. Construction Methods. When an item for fertilizer is included in the plans and proposal, pelleted or granulated fertilizer shall be applied uniformly over the area specified to be fertilized and in the manner directed for the particular item of work. The fertilizer shall be dry and in an acceptable physical condition. Fertilizer that is powdered or caked will be rejected. Distribution of fertilizer for the particular item of work shall meet the approval of the Engineer.

Fertilizer shall be applied uniformly at the average rate indicated on the plans.

166.4. Measurement. Work and acceptable material for "Fertilizer" will be measured by the ton (2,000 pounds) as determined by approved scales or guaranteed weight of bags or containers shown by the manufacturer.

166.5. Payment. The work performed and materials furnished and measured as provided under "Measurement" will be paid for at the unit price bid for "Fertilizer", of the analysis specified, which price shall be full compensation for furnishing all materials and performing all operations necessary to complete the work.

ITEM 168

SPRINKLE IRRIGATION

168.1. Description. "Sprinkle Irrigation" shall consist of the authorized application of water on those portions of the right of way as shown on plans or as directed by the Engineer, and as herein specified.

168.2. Materials. Water shall be furnished by the Contractor and shall be clean and free of industrial wastes and other substances harmful to the growth of grass.

168.3. Construction Methods. This work will be done only at such time as directed by the Engineer. The Contractor shall furnish and operate approved sprinklers which will insure the distribution of water in a uniform and controllable rate of application. The Contractor shall apply the water in the required quantity where shown on plans or as directed by the Engineer.

168.4. Measurement. Sprinkle Irrigation, performed as provided above, will be measured by the 1000 gallons as delivered on the designated areas.

168.5. Payment. The water furnished and the work performed as prescribed by this item and measured as provided under "Measurement" will be paid for at the unit price bid for "Sprinkle Irrigation", which price shall be full compensation for all costs in connection with furnishing the water; for all costs in connection with furnishing and operating approved sprinklers and all necessary measuring devices; and for applying the water as directed, including all hauling, equipment, tools, materials, labor, and incidentals necessary to complete the work.

ITEM 169

SOIL RETENTION BLANKET

169.1. Description. "Soil Retention Blanket" shall consist of providing and placing wood fiber mat, nylon monofilament mat or jute mesh as soil retention blanket over areas designated on the plans or such areas specified by the Engineer.

169.2. Materials. All materials shall meet the applicable requirements as indicated below.

(1) Wood Fiber Mat. The wood fiber mat shall consist of a machine produced mat of curled wood excelsior of 80% six-inch or longer fiber-length, with consistent thickness and the fiber evenly distributed over the entire area of the blanket. The top side of each blanket shall be covered with a biodegradable, carbon-impregnated extruded plastic mesh, or other material as approved by the Engineer. The weight of the blanket shall be approximately 1.25 lbs. per square yard.

(2) Nylon Monofilament Mat. The monofilament mat shall consist of entangled nylon monofilaments, fused at the intersections of the entangled fibers. The three-dimensional structure so formed shall be a bulky mat with 90% of its volume a void capable of being filled with soil after installation on the project site. The material of which the mat consists, shall be Nylon 6 plus a minimum 0.5%, by weight, of Carbon Black. Additionally, the nylon monofilament mat shall meet or exceed the following requirements.

	Metric	English
Weight	405 g/sq. m ± 7%	0.06 psi ± 7%
Thickness of mat	18 mm minimum	0.71 inch minimum
Width of mat	97 cm ± 3%	38 inches ± 3%
Length of mat	100 m ± 3%	328 feet ± 3%
Filament diameter	0.40 mm minimum	0.015 inch minimum
Tensile strength - length direction	140 kg/m minimum	94.07 lbs./ft. min.
Tensile strength - width direction	80 kg/m minimum	53.76 lbs./ft. min.
Elongation - length direction	50% minimum	50% minimum
Elongation - width direction	50% minimum	50% minimum
Resiliency - immediate recovery, 5 cycles at 200 psi (14061.4 gm/sq cm)	80%	
Temperature range for 80% Strength retention	-100° to +250° F	
pH range for 80% strength retention	3 to 12	

(3) **Jute Mesh.** Jute mesh shall consist of heavy smolder-resistant jute strands of uniform size woven into a fabric with approximately one-inch openings between strands. The jute mesh shall weigh approximately one pound per square yard.

(4) **Wire Staples.** Wire staples shall be made from not less than 13 inch lengths of No. 11 wire bent to form a "U" approximately one inch in width.

169.3. Construction Methods. The Soil Retention Blanket, unless otherwise shown on plans, may be wood fiber mat, nylon monofilament mat, or jute mesh at the option of the Contractor and shall be placed within 24 hours after seeding operations have been completed, or when directed by the Engineer. Prior to placing the blanket, the area to be covered shall be relatively free of all rocks or clods over 1 1/2 inches in diameter and all sticks or other foreign material which will prevent the close contact of the blanket with the soil. The area shall be smooth and free of ruts or other depressions. If as a result of rain, the prepared seedbed becomes crusted or eroded, or if eroded places, ruts or depressions exist from any reason, the Contractor will be required to rework the soil until it is smooth and to reseed such areas which are reworked. After the area has been properly prepared, the blanket shall be laid out flat, even and smooth without stretching or crimping the material.

Jute mesh used as a ditch lining shall be applied with the lengths running parallel to the flow of water. Where more than one width is required, a lap joint not less than 4 inches shall be used, with the upslope width on top.

An anchor slot shall be constructed at the upslope edge of the jute mesh placement. This is accomplished by burying at least 6 inches of the end of the mesh vertically in a slot dug in the soil. The soil shall be firmly tamped against the jute in the slot.

Junction slots shall be used to join the ends of successive lengths. For junction slots, the upslope end of each strip of jute mesh shall be buried at least 6 inches in a slot dug in the earth. Soil shall be firmly tamped against the jute in the slot. The ends of the jute shall overlap at least 12 inches with the upslope section on top.

Check slots shall be constructed by placing a tight fold at least 6 inches vertically into the soil. On ditch grades of 4 per cent or less, such check slots shall be spaced so that a check or junction slot occurs within each 50 feet. On ditch grades greater than 4 per cent, such slots shall occur within each 25 feet.

A terminal slot shall be placed at the bottom end of the mesh. This shall be accomplished by burying the end of the mesh vertically in a slot dug in the soil as shown on the plans. The soil shall be firmly tamped against the jute in the slot.

Four inch or six inch lawn edging may be used as an alternate means of providing a check slot. The edging material may be either metal or rigid plastic and shall be placed under the mesh. This edging shall be driven flush with the slope or channel surface, with staples installed through the mesh on the upslope side of the edging at 6 inch intervals.

Jute mesh shall be held in place by means of wire staples. The staples shall be driven at a 90° angle to the plane of the soil. Staples shall be spaced not more than 3 feet apart in 3 rows for each strip, with a row along each edge and one row alternately spaced in the middle. All ends of mesh, and check slot locations, shall be secured by staples spaced 6 inches apart across the width. If jute mesh over sod is specified, check slots or junction slots will not be required.

The wood fiber mat, or nylon monofilament mat, shall be laid in the same manner as jute mesh except that the ends and edges are not lapped, but are tightly butted together. The stapling pattern is the same as required for jute mesh. When wood fiber mat or nylon monofilament mat is placed as a ditch liner, junction slots, check slots, and anchor slots are not required. However, in lieu of check slots, a row of staples spaced on 6 inch centers, running at right angles to the ditch line rows, shall be placed within each 50 feet on ditch grades of 4 per cent or less. On ditch grades greater than 4 per cent, such rows of staples shall occur within each 25 feet.

When jute mesh, wood fiber mat or nylon monofilament mat is used on cuts or fills, the mesh or mat may be placed with the length running from

top of slope to toe of slope, or the mesh or mat may be placed with the length running horizontally or parallel to the contour. Check slots will not be required for jute mesh placed on cuts or fills.

Immediately after the soil retention blanket has been placed and stapled, the area covered shall be sprinkled and rolled with a light roller of sufficient weight to press the blanket into the surface of the soil. The roller shall be of such weight to avoid over-compaction of the seedbed.

169.4. Measurement. Work and acceptable material for "Soil Retention Blanket" will be measured by the square yard of surface area covered.

169.5. Payment. The work performed and materials furnished and measured as provided under "Measurement" will be paid for at the unit price bid for "Soil Retention Blanket", which price shall be full compensation for furnishing wood fiber mat, nylon monofilament mat or jute mesh, labor, tools, equipment and incidentals necessary to complete the work. No direct payment will be made for anchor, check, terminal or junction slots and wire staples; these being considered as subsidiary work pertaining to the construction of the various bid items.

All seeding, sodding, fertilizer and irrigation will be measured and paid for in accordance with the provisions governing the Items of "Seeding", "Sodding", "Fertilizer" and "Sprinkle Irrigation".

ITEM 170

OBLITERATING ABANDONED ROAD

170.1. Description. "Obliterating Abandoned Road" shall consist of the obliteration of designated sections of abandoned road by appropriate grading.

170.2. Construction Methods. After the designated sections of an old road, or detours, are no longer needed for traffic, the ditches shall be filled and the roadway graded, either to restore approximately the original contour of the ground or to produce a pleasing appearance by forming natural rounded slopes. Where shown on plans, borrow required for the new roadway shall be taken from fills on the old road, and surplus or waste material from the new roadway shall be placed in cuts on the old road. Old structures shall be broken down and buried or removed. All material with salvage value shall be carefully removed to avoid damage, and stored at designated sites or used in the construction of the new road where provided. The area of the old road surfacing shall be scarified or plowed to mix it effectively with earth, and the entire area of the old roadway shall be smoothed by blading or other methods.

Where directed, suitable topsoil or humus material shall be conserved and used in covering necessary areas for the purpose of facilitating regrowth of vegetation. No extra payment will be made or allowed for conserving such "Topsoil" material or for such humus material or for the utilization thereof save the payment of any "Overhaul" involved.

170.3. Measurement. Work as prescribed for in this item will be measured by the 100-foot station.

170.4. Payment. The work performed as prescribed by this item, measured as provided under "Measurement", will be paid for at the unit price bid for "Obliterating Abandoned Road", which price shall be full compensation for all manipulation, labor, tools, equipment and incidentals necessary to complete the work.

Embankment materials removed from the old road for use in the new roadway, and excavated materials from the new roadway wasted on old road areas, and haul on such materials will be measured and paid for in accordance with the provisions governing the Items of "Borrow", "Roadway Excavation" and "Overhaul".

Structures designated on plans for removal will be measured and paid for in accordance with the provisions governing the Item, "Removing Old Structures".

ITEM 190

ROADSIDE PLANTING

190.1. Description. "Roadside Planting" shall consist of the initial planting and any replanting of specified plants as shown on the plans, or as directed by the Engineer.

Planting Season. All planting of container stock shall be performed as specifically permitted by the Engineer, or as noted on the plans. However, all planting of Balled and Burlapped, Balled and Potted or Bare-Root stock shall be performed between November 15, and March 15, except as otherwise noted on the plans or as specifically permitted by the Engineer.

190.2. Materials.

(1) Plant Material. Plant material shall be healthy, vigorous, well-rooted, well-formed, true-to-name and of the sizes shown on the plans and in the specifications. Container stock shall be defined as plant stock transplanted into a container and grown in that container continuously long enough for the new fibrous roots to have developed so that the root mass will retain its shape and hold together after removal from the container. Ball sizes for Balled and Burlapped stock shall be as called for on the plans or specifica-

tions, and shall be of such a diameter and depth to encompass enough fibrous and feeding root system necessary for the full recovery of the plant. Balled and Potted stock shall be considered as Balled and Burlapped stock. Bare-Root stock shall have a well-branched root system, characteristic of the species. All plants shall be nursery-grown unless otherwise noted on the plans or specifications. When the Engineer is furnished sufficient evidence that a specified plant cannot practically be obtained, the Engineer may approve in writing, the use of collected native material. Plant material having any of the following features will be subject to rejection:

1. Undue abrasions of the bark.
2. Dried root system.
3. Dried top wood of deciduous plants or dried foliage of evergreens.
4. Prematurely opened buds, or damaged buds.
5. Diseased or insect-infested plants.
6. Balled and Burlapped plants which have dry, loose, broken, and/or undersized balls which do not conform to the sizes shown on the plans.
7. Showing evidence of heating, molding or freezing.
8. Plants in containers that are overgrown or root-bound.
9. Plants with bench balls.
10. Plant ball encased in plastic or other impervious material.

(2) **Mulch.** Mulch material shall consist of loose organic residue derived from plants, or other granular material as approved by the Engineer, or as called for on the plans, and shall be of such nature that adequate protection is provided against sun baking and quick drying of the soil, will not impede aeration or water penetration nor deplete the soil nitrogen. Mulch material shall be free of excess amounts of large leaves and sticks that would prevent proper dressing of the mulched surface, free of harmful chemicals and free of detrimental amounts of soil or other foreign matter that would promote early compaction, matting or deterioration of the mulch.

(3) **Peat Moss.** Peat Moss, if called for on the plans, shall be of sphagnum origin, as is commercially available.

(4) **Backfill.** Backfill shall be a loose friable material as called for on the plans. Backfill shall be free of noxious weeds and shall be thoroughly mixed in the proportions shown on the plans. Excavated material from the planting holes shall not be used for backfill.

(5) **Size.** The caliper for trees shall be taken 6 inches above original ground line, up to 4 inch caliper. On sizes of 4 inch caliper and larger, the measurement shall be taken at a point 12 inches above original ground line. Plants having a spreading or semi-spreading habit shall be measured by the average diameter of the spread. Size of special plant classes like roses, vines, and groundcovers, will be measured in accordance with appropriate notes on the plans. Container-grown plants which are well established in

adequate size containers and are of equal quality and size as the specified balled plants may be accepted in lieu of balled plants. Soil shall be approximately 3/4 depth of the container and contain roots of the plant throughout the soil.

(6) **Delivery.** Material shall not be delivered to the project until ordered in writing by the Engineer, and when so ordered, the Engineer shall be notified of a proposed delivery of plant material at least 24 hours prior to its arrival at the project. Each shipment shall be accompanied by an invoice showing the number, size and name of each of the kinds of plant material included with each kind of plant adequately identified by tags. The entire plant shall be completely and properly protected from sun and wind damage during shipment to the project. Upon arrival, the Engineer will make an immediate inspection and will accept for planting or "heeling-in" all plants complying with these specifications; and any plants rejected under the same shall be immediately removed from the project. Unless plants are placed in pre-dug holes and planted as specified herein, they shall be "heeled-in" and inspected again prior to planting. All plants rejected during this inspection shall be removed and replaced with nursery stock in accordance with the plans and specifications and to the satisfaction of the Engineer. If delivered to pre-dug planting holes, balled and burlapped plants shall be planted within 1 to 6 hours depending upon the drying effect of the wind and sun. No Bare-Rooted plants shall be placed in pre-dug holes from the delivery truck unless actual planting occurs immediately after removal from its moist packing. No shipment of plant material shall be accepted, planted and/or "heeled-in" by the Contractor until such material has been inspected and accepted by the Engineer. The Contractor shall assist the Engineer in the inspection of material.

(7) **Bracing.** Bracing, if called for on the plans, shall be of the type shown on the plans or in the details.

(8) **Tree Wrapping.** Tree wrapping, if called for on the plans, shall be of the type shown on the plans or in the details.

(9) **Fertilizer.** If used and called for on the plans, fertilizer shall be of the type and quantity specified on the plans.

(10) **Standards.** Standards for nursery stock shall be as stated in the latest "American Standard for Nursery Stock", as published by the American Association of Nurserymen, Inc. Botanical names as specified shall be as stated in "Standardized Plant Names", by the American Joint Committee on Horticultural Nomenclature.

190.3. Construction Methods. Immediately following delivery and acceptance at the job, all plants shall be planted or "heeled-in" with adequate moist material. All plants "heeled-in" shall be properly maintained by the Contractor until planted. In handling plants, the utmost care shall be exer-

cised to prevent injuries to the plants. The solidity of the ball of Balled and Burlapped plants shall be carefully preserved, and such plants shall not be handled by the stems.

Plants with exposed roots shall be protected from drying out during the time the plants are removed from the "heeling-in" bed and until actually planted.

(1) **Preparation of Planting Holes.** Planting holes may be dug by hand or by mechanical means. Trimming of the sides or bottom of the hole to uniform shape will not be required. Planting holes shall have a minimum horizontal dimension of 2 times the specified diameter of the ball of Balled and Burlapped plants or the average root spread of Bare-Rooted plants. Planting holes shall be excavated to a depth of at least 4 inches but not more than 8 inches greater than the depth of the ball of Balled and Burlapped plants or the depth of the root system of Bare-Rooted plants. Holes dug to excess depths shall be backfilled and tamped to bring the holes to the specified depth. The depth of holes on slopes shall be measured at the lower side. Special sized holes shall be as shown on the plans. Where holes are dug with an auger and the sides of the holes become plastered or glazed, this plastered or glazed surface shall be scarified.

(2) **Pruning Roots.** Root pruning shall be limited to the amount necessary to prune away broken and badly damaged roots.

(3) **Pruning of Tops.** Plants shall not be pruned before delivery to the job, unless otherwise noted on the plans or by written permission of the Engineer.

Pruning of plants shall conform to the best horticultural practice, and shall be appropriate to the various types of plants and the special requirements of each. Deciduous (non-evergreen) shrubs and trees with heavy tops shall have about one-third to one-half of the top growth removed.

(4) **Planting and Backfilling.**

(a) **Depth of Transplanting.** In general, the top of the root ball shall stand, after settlement of the backfill, approximately level with the finish grade.

(b) **Bare-Root Plants.** After the backfill in the bottom of the planting hole has been firmed and the plant placed in the proper position, as shown on the plans or details, loose friable backfill shall be worked about the roots and thoroughly settled with water as the backfill is made. Care shall be taken to avoid bruising or breaking the roots. No sticks, sod, clods or other material which would tend to form large air pockets in the soil or backfill shall be included in the backfill.

(c) **Balled and Burlapped Plants.** Plants of this type shall not be handled by the stems or in such manner that the soil of the ball will be loosened.

The burlap shall not be removed from the ball. After the backfill in the bottom of the hole has been firmed and the plant placed in the proper position as shown on the plans or in the details, loose friable backfill shall be worked about the ball until the hole is two-thirds full. The hole shall then be filled with water and the backfilling completed, working the backfill and water well to prevent any air pockets.

(d) **Container-Grown Plants.** At the time of planting container-grown stock, the root ball and plant shall be removed from the container with a minimum damage to the root ball. If, in the opinion of the Engineer, a sufficient amount of soil has fallen off or the ball has been broken to such an extent as to reduce the chances of the plant to grow, the plant will be rejected. Container stock shall be planted in the same manner as Balled and Burlapped stock.

(e) **Finishing Surface after Backfilling.** A basin, 8 to 10 inches deep, shall be formed by constructing a neat levee around the planting hole. The inside measurement of the basin shall not be less than the minimum specified diameter of the planting hole, unless otherwise stated on the plans. On slopes, the backfill on the lower side shall be graded in such a manner that an adequate basin will be provided.

Material excavated from the planting holes may be used to form a basin around the plant. Excess excavated material may be scattered thinly and leveled off provided it is of such consistency and character that it can be readily scattered in an acceptable manner. In case the scattering of material will interfere with drainage or mowing, all such material shall be removed and disposed of as directed by the Engineer.

(5) **Bracing Trees.** Tree bracing, if required and called for on the plans, shall be performed as shown on the plans or in the details. The Contractor shall repair braces as often as required until acceptance of the project for "Plant Establishment".

(6) **Tree Trunk Protection.** For protection of the tree trunk, all trees so specified on the plans shall be neatly and securely wrapped with a commercial "Tree Wrapping Paper" (asphalt-core type) approved by the Engineer. The wrapping is to begin at the base of the trunk and extend upward with a 50 percent overlap to the first major branch. Secure the wrapping paper at the top of the wrap with soft twine or weatherproof tape, or any suitable method as approved by the Engineer.

(7) **Mulching.** All plants shall receive mulching to a depth of 2 inches within the planting basin unless otherwise specified on the plans. A small amount of backfill shall be sprinkled on top of organic mulch to hold it in place if directed by the Engineer. If hay is used, the depth shall be 4 inches, loose measurement.

(8) **Maintenance Period.** The Contractor shall perform the following maintenance activities:

(a) Mow as necessary to keep weeds and grass out of the planted area including plant basin.

(b) Water as often as necessary to keep the ground and backfill moist well below the root ball.

(c) Repair or replace bracing as necessary.

(d) Prune as necessary.

(e) Treat the plants in accordance with approved methods of horticultural practices where insects or disease affect the plants after planting.

The Contractor shall perform all of the above activities throughout the initial planting period. After completion of the planting, as shown on the plans, the Contractor shall perform these activities for a period of 90 calendar days. At the end of this 90 day period, the plantings will be inspected by the Engineer.

190.4. Acceptability of Plants. The Engineer will make an inspection of the project to determine the acceptability of the plant material as shown on the plans at the end of the 90 day maintenance period. At this time, an inventory of missing, dead, or rejected plant material will be made and the Contractor notified that the plants on the inventory are to be replanted with the time limits for replanting and replacement specified by the Engineer. Plant material for the replacement planting shall meet all the requirements specified for the original plant material and shall be planted in accordance with the planting instructions listed under "Construction Methods". All replacement plantings will be inspected to insure that the specifications are met. This inspection will be made within ten days after the replacement planting is completed. No further plant replacement will be required.

190.5. Plant Establishment. When shown on the bid proposal as a pay item, the Contractor shall be required to perform "Plant Establishment". The period of "Plant Establishment" will begin after the initial 90 day maintenance period and shall continue for a period of 9 consecutive months. For the work of "Plant Establishment", all possible means shall be employed to preserve the plants in a healthy and vigorous growing condition to insure their successful establishment. Such work shall consist of watering the plants, cutting weeds and grass around the planted area including the plant basin and bracing, pruning the plants, and repair or replacement of bracing as may be required, or as so ordered by the Engineer. Where insects or disease affect the plants after planting, the plants shall be treated in accordance with approved methods of horticultural practices. Plants which die during the period of "Plant Establishment" shall be removed

from the project, and replaced with plants which conform to the requirements of the plans and specifications. If, in the opinion of the Engineer, the death of plant material is the result of the actions of others, the Contractor will not be required to replace such plants.

190.6. **Measurement.** Work and accepted materials as prescribed for this item will be measured as each plant complete and in place, except for "Plant Establishment". Work and accepted materials necessary for "Plant Establishment" will be measured as complete and in place, measured on a monthly basis.

190.7. **Payment.** Work performed and materials accepted as prescribed by this item, measured as provided under "Measurement", will be paid for at the unit price bid for each plant of the various species, complete and in place, except for "Plant Establishment", which price shall be full compensation for all items necessary to complete the work. The work performed and materials furnished for "Plant Establishment" shall be paid for at the contract monthly price bid for "Plant Establishment", which price shall be full compensation for all items necessary.

DIVISION II SUBBASE AND BASE COURSES

ITEM 200

STRIPPING

200.1. Description. "Stripping" shall consist of the excavation, removal, and satisfactory disposal of unsuitable materials encountered within the limits of the designated or approved material sources, including fine material screened out to meet the required gradation for the base material.

200.2. Construction Methods. The Engineer shall be notified sufficiently in advance of opening any material source to permit necessary staking and measurement. Overburden and other unsatisfactory material shall be excavated, removed, and placed in designated spoil banks or shall otherwise be disposed of as directed, in such manner as not to create an unsightly or objectionable condition and to permit accurate measurement of the quantity of material stripped. Measurement will be made as soon as practicable after the satisfactory completion of the stripping operations.

200.3. Measurement. Unless otherwise specified, stripping will be measured in spoil banks and the volume computed in cubic yards by the method of average end areas, except that in unusual cases where such measurement is impracticable, a comparable method acceptable to the Engineer and Contractor may be used.

200.4. Payment. Stripping performed and measured as provided under "Measurement" will be paid for at the unit price bid for "Stripping" which price shall be full compensation for all hauling, labor, tools, equipment and incidentals necessary to complete the work.

ITEM 204

SPRINKLING

204.1. Description. "Sprinkling" shall consist of the authorized application of water on those portions of the roadway as shown on plans or as directed and as herein specified.

204.2. Materials. Water shall be furnished by the Contractor and shall be clean and free from industrial wastes and other objectionable matter.

204.3. **Construction Methods.** This work will be done only when directed by the Engineer. The Contractor shall furnish and operate approved sprinklers equipped with positive and rapidly working cut-off valves and approved spray bars which will insure the distribution of water in a uniform and controllable rate of application. The Contractor shall apply the water in the required quantity where shown on plans or as directed by the Engineer.

204.4. **Measurement.** Sprinkling performed as provided above will be measured by the 1000 gallons as delivered on the roadway.

204.5. **Payment.** The water furnished and the work performed as prescribed by this item and measured as provided under "Measurement" will be paid for at the unit price bid for "Sprinkling", which price shall be full compensation for all costs in connection with furnishing the water; for all costs in connection with furnishing and operating approved sprinklers and all necessary measuring devices; and for applying the water as directed, including all hauling, equipment, tools, materials, labor, and incidentals necessary to complete the work.

ITEM 210

ROLLING
(Flat Wheel)

210.1. **Description.** "Rolling (Flat Wheel)" shall consist of the compaction of embankment, flexible base, or surface treatments, by the operation of approved power rollers as herein specified and as directed by the Engineer.

210.2. **Equipment.**

(1) **Embankments and Flexible Bases.** Power rollers shall be of the three-wheel, self-propelled type, weighing not less than 10 tons and shall provide a compression on the rear wheels of not less than 325 pounds per linear inch of tire width. All wheels shall be flat, the rear wheels shall have a diameter of not less than 48 inches, and each shall have a tire width of not less than 20 inches.

(2) **Surface Treatments.** Power rollers shall be the three-wheel or tandem, self-propelled type, weight not less than 3 tons nor more than 6 tons. All wheels shall be flat.

In lieu of the equipment specified, the Contractor may, upon written permission from the Engineer, operate other compacting equipment that will produce equivalent relative compaction in the same period of time as the specified equipment. If the substituted compaction equipment fails to pro-

duce the desired compaction within the same period of time as would be expected of the specified equipment, as determined by the Engineer, its use shall be discontinued.

Rollers shall be maintained in good repair and operating condition and shall be approved by the Engineer.

210.3. Construction Methods. This work shall be done only when directed by the Engineer. Sufficient rollers shall be provided to compact the material in a satisfactory manner. The minimum number of rolling units shall be governed by the basis of estimate for rolling shown in the plans and progress in placing the materials to be compacted. The quantity of material placed per hour shall be determined by averaging the total quantity of material placed within any one working day. When operations are so isolated from one another that one roller unit cannot perform the required compaction satisfactorily, additional roller units shall be provided.

(1) **Embankments and Flexible Base.** The embankment layer or the base course shall be sprinkled if directed, and rolling with a power roller shall start longitudinally at the sides and proceed towards the center overlapping on successive trips by at least one-half of the width of the rear wheel of the power roller. On superelevated curves, rolling shall begin at the low sides and progress toward the high sides. Alternate trips of the roller shall be slightly different in length. Rolling shall continue until discontinued by the Engineer. The rollers, unless otherwise directed, shall be operated at a speed between 2 and 3 miles per hour.

(2) **Surface Treatments.** Rolling shall be done as called for in surface treatment items. The sequence of work shall be as specified for embankment layer or base course as directed by the Engineer. The operating speed shall be as directed by the Engineer.

210.4. Measurement. Rolling, performed as provided above, will be measured by the actual hours the power roller works as directed by the Engineer.

210.5. Payment. The equipment furnished and operated as prescribed by this item and measured as provided under "Measurement" will be paid for at the unit price bid for "Rolling (Flat Wheel)", which price shall be full compensation for furnishing and operating all equipment; and for all labor, fuel, tools, and incidentals necessary to satisfactorily perform the work except sprinkling.

All sprinkling performed as required will be measured and paid for in accordance with the provisions governing the Item, "Sprinkling".

ITEM 211

ROLLING
(Tamping)

211.1. **Description.** "Rolling (Tamping)" shall consist of the compaction of embankment or of flexible base by the operation of approved tamping rollers as herein specified and as directed by the Engineer.

211.2. **Equipment.** The tamping rollers shall consist of two metal rollers, drums, or shells of 40 inches minimum diameter; each not less than 42 inches in length and unit-mounted in a rigid frame in such manner that each roller may oscillate independently of the other; and each roller, drum, or shell shall be surmounted by metal studs with tamping feet projecting not less than 7 inches from the surface and spaced not less than 6 inches nor more than 10 inches measured diagonally center to center; and the cross-sectional area of each tamping foot, measured perpendicularly to the axis of the stud, shall be not less than 5 nor more than 8 square inches. The roller shall be supplemented with cleaning teeth to provide self cleaning. The roller shall be so designed that by ballast loading, the load on each tamping foot may be varied uniformly from 125 to not less than 175 pounds per square inch of cross-sectional area. The load per tamping foot will be determined by dividing the total weight of the roller by the number of tamping feet in one row parallel to or approximately parallel to the axis of the roller. The compression to be provided at any time shall be as directed by the Engineer. The tamping roller shall be drawn by suitable power equipment of adequate tractive effort. Two tamping rollers, consisting of four cylinders, conforming to the above prescribed requirements, drawn by approved power equipment, shall be considered a roller unit.

Where turning is impractical or detrimental to the work and when specifically directed by the Engineer, one tamping roller consisting of two cylinders, fastened to the front end of approved power equipment, shall be considered a roller unit.

If approved by the Engineer, the Contractor may substitute rollers conforming to requirements in the Item, "Rolling (Heavy Tamping)" in lieu of rollers specified above. Such units shall be considered a roller unit.

In lieu of the rolling equipment specified, the Contractor may, upon written permission from the Engineer, operate other compacting equipment that will produce equivalent relative compaction in the same period of time as the specified equipment. If the substituted compaction equipment fails to produce the desired compaction within the same period of time as would be expected of the specified equipment, as determined by the Engineer, its use shall be discontinued.

Rollers shall be maintained in good repair and operating condition and shall be approved by the Engineer.

211.3. **Construction Methods.** This work shall be done only when directed by the Engineer. The embankment layer or the base course shall be sprinkled if directed, and rolling with a tamping roller unit shall start longitudinally at the sides and proceed towards the center, overlapping on successive trips by at least one-half of the width of the tamping roller unit. On superelevated curves, rolling shall begin at the low sides and progress toward the high sides. Alternate trips of the unit shall be slightly different in length. Rolling shall continue until discontinued by the Engineer. The tamping roller unit, unless otherwise directed, shall be operated at a speed between 2 and 3 miles per hour.

Sufficient rollers shall be provided to compact the material in a satisfactory manner. The minimum number of rolling units shall be governed by the basis of estimate for rolling shown in the plans and progress in placing the material to be compacted. The quantity of material placed per hour shall be determined by averaging the total quantity of material placed within any one working day. When operations are so isolated from one another that one roller unit cannot perform the required compaction satisfactorily, additional roller units shall be provided.

211.4. **Measurement.** Rolling performed as provided above will be measured by the actual hours the tamping roller unit works as directed by the Engineer.

211.5. **Payment.** The equipment furnished and operated as prescribed by this item and measured as provided under "Measurement" will be paid for at the unit price bid for "Rolling (Tamping)", which price shall be full compensation for furnishing and operating all equipment; and for all labor, fuel, tools and incidentals necessary to satisfactorily perform the work except sprinkling.

All sprinkling performed as required will be measured and paid for in accordance with the provisions governing the Item, "Sprinkling".

ITEM 212

ROLLING
(Heavy Tamping)

212.1. **Description.** "Rolling (Heavy Tamping)" shall consist of the compaction of embankment, roadbed treatment, flexible base or other courses, by the operation of approved tamping rollers as herein specified, and as directed by the Engineer.

212.2. **Compaction Equipment.** The heavy tamping roller shall consist of two or three metal drums, rolls, or shells of 60 inches minimum diameter.

If the two-drum type is furnished, each drum shall be not less than 60 inches in length. If the three-drum type is furnished, the roller shall consist of two forward drums and one rear drum, the drums to be so arranged that the rear drum will compact the space between the two forward drums, and rollers of this type shall have an overall width of not less than 10 feet.

The drums shall be unit-mounted in a rigid frame in such manner that each drum may oscillate independently of the other.

Each drum shall be surmounted by metal studs with tamping feet projecting not less than 7 inches from the surface and shall be so spaced as to result in one tamping foot for each 0.65 to 0.7 square foot of drum area. The area of each tamping foot shall be approximately 7 square inches. All rollers shall be provided with cleaning teeth so designed and attached as to prevent the accumulation of material between the tamping feet.

The roller shall be so designed that by ballast loading, the load on each tamping foot may be varied up to at least 550 pounds per square inch of cross-sectional area. The load per tamping foot will be determined by dividing the total weight of the roller by the number of tamping feet in one row parallel to or approximately parallel to the axis of the roller. The compression to be provided at any time shall be as directed by the Engineer.

One tamping roller, consisting of two drums or three drums, conforming to the above requirements and drawn by an approved type tractor of adequate tractive effort, shall be considered a heavy tamping roller unit.

Where turning is impractical or detrimental to the work, and when specifically directed by the Engineer, the roller shall be attached to the front end of the power equipment.

When operations are confined to narrow widths and when specifically directed by the Engineer in writing, one roller, either pushed or pulled, by adequate power equipment shall be considered a roller unit.

In lieu of the rolling equipment specified, the Contractor may, upon written permission from the Engineer, operate other compacting equipment that will produce equivalent relative compaction in the same period of time as the specified equipment. If the substituted compaction equipment fails to produce the desired compaction within the same period of time as would be expected of the specified equipment, as determined by the Engineer, its use shall be discontinued.

The roller unit shall be maintained in good repair and operating condition and shall be approved by the Engineer.

212.3. Construction Methods. This work shall be done only when directed by the Engineer. The embankment layer shall be sprinkled if directed, and rolling with a tamping roller unit shall start longitudinally at the sides and proceed towards the center, overlapping on successive trips

by at least one-half of the width of the tamping roller. On superelevated curves, rolling shall begin at the low sides and progress toward the high sides. Alternate trips of the unit shall be slightly different in length. Rolling shall continue until discontinued by the Engineer. The tamping roller unit, unless otherwise directed, shall be operated at a speed between 2 and 3 miles per hour.

Sufficient rollers shall be provided to compact the material in a satisfactory manner. The minimum number of rolling units shall be governed by the basis of estimate for rolling shown in the plans and progress in placing the material to be compacted. The quantity of material placed per hour shall be determined by averaging the total quantity of material placed within one working day. When operations are so isolated from one another that one roller unit cannot perform the required compaction satisfactorily, additional roller units shall be provided.

212.4. **Measurement.** Rolling performed as provided above will be measured by the actual hours the tamping roller unit works as directed by the Engineer.

212.5. **Payment.** The equipment furnished and operated as prescribed by this item and measured as provided under "Measurement" will be paid for at the unit price bid for "Rolling (Heavy Tamping)", which price shall be full compensation for furnishing and operating all equipment; and for all labor, fuel, tools, and incidentals necessary to satisfactorily perform the work except sprinkling.

All sprinkling performed as required will be measured and paid for in accordance with the provisions governing the Item, "Sprinkling".

ITEM 213

ROLLING
(Pneumatic Tire)

213.1. **Description.** "Rolling (Pneumatic Tire)" shall consist of the compaction of embankment, flexible base, surface treatments, or pavements by the operation of approved pneumatic tire rollers as herein specified and as directed by the Engineer.

213.2. **Equipment.**

(1) **The light pneumatic tire roller** shall consist of not less than nine pneumatic tired wheels, running on axles in such manner that the rear group of tires will cover the entire gap between adjacent tires of the forward group, and mounted in a rigid frame and provided with a loading platform or body suitable for ballast loading. The front axle shall be attached to the frame in such manner that the roller may be turned within a minimum cir-

cle. The pneumatic tire roller under working conditions shall have an effective rolling width of approximately 60 inches and shall be so designed that by ballast loading, the total load may be varied uniformly from 9,000 pounds or less to 18,000 pounds or more. The roller shall be equipped with tires that will afford ground contact pressures of 45 pounds per square inch or more. The operating load and tire air pressure shall be within the range of the manufacturer's charts or tabulations showing the contact areas and contact pressures for the full range of tire inflation pressures and for the full contact pressures for the full range of tire inflation pressures and for the full range of loadings for the particular tires furnished. The roller under working conditions shall provide a uniform compression under all wheels. Individual tire inflation pressures shall be within plus or minus five p.s.i. of each other. The pneumatic tire roller shall be drawn by either a suitable crawler type tractor, a pneumatic tired tractor, or a truck of adequate tractive effort, or may be of the self-propelled type, and the roller, when drawn or propelled by either type of equipment, shall be considered a light pneumatic tire roller unit.

(2) **The medium pneumatic tire roller (Type A)** shall consist of not less than seven pneumatic tired wheels, running on axles in such manner that the rear group of tires will cover the entire gap between adjacent tires of the forward group, and mounted in a rigid frame and provided with a loading platform or body suitable for ballast loading. The front axle shall be attached to the frame in such manner that the roller may be turned within a minimum circle. The pneumatic tire roller under working conditions shall have an effective rolling width of approximately 84 inches and shall be so designed that by ballast loading the total load may be varied uniformly from 23,500 pounds or less to 50,000 pounds or more. The roller shall be equipped with tires that will afford ground contact pressures to 80 pounds per square inch or more. The operating load and tire air pressure shall be within the range of the manufacturer's chart as directed by the Engineer. The Contractor shall furnish the Engineer with charts and tabulations showing the contact areas and contact pressures for the full range of tire inflation pressures and for the full range of loading for the particular tires furnished. The roller under working conditions shall provide a uniform compression under all wheels. Individual tire inflation pressures shall be within plus or minus five p.s.i. of each other.

The pneumatic tire roller shall be drawn by either a suitable crawler type tractor, a pneumatic tired tractor, or a truck of adequate tractive effort, or may be of the self-propelled type and the roller, when drawn or propelled by either type of equipment, shall be considered a medium pneumatic tire roller unit. The power unit shall have adequate tractive effort to properly move the operating roller at variable uniform speeds up to approximately 5 miles per hour.

(3) **The medium pneumatic tire roller (Type B)** shall conform to the requirements for Medium Pneumatic Tire Roller, Type A as specified in Article 213.2(2) except that the roller shall be equipped with tires that will afford ground contact pressures to 90 pounds per square inch or more.

When used on seal coats, asphaltic surface treatments and bituminous mixture pavements, the roller shall be self-propelled and equipped with smooth tread tires whether "Rolling (Light Pneumatic Tire)" or "Rolling (Medium Pneumatic Tire)" is specified on the plans. The roller shall be so constructed as to be capable of being operated in both a forward and a reverse direction.

When used on bituminous mixture pavements, the roller shall have suitable provisions for moistening the surface of the tires while operating.

Where turning is impractical or detrimental to the work, and when specifically directed by the Engineer, the roller shall be of the self-propelled type.

In lieu of the rolling equipment specified, the Contractor may, upon written permission from the Engineer, operate other compacting equipment that will produce equivalent relative compaction in the same period of time as the specified equipment. If the substituted compaction equipment fails to produce the desired compaction within the same period of time as would be expected of the specified equipment, as determined by the Engineer, its use shall be discontinued.

Rollers shall be maintained in good repair and operating condition and shall be approved by the Engineer.

213.3. Construction Methods. This work shall be done only when directed by the Engineer. The embankment layer or the base course shall be sprinkled if directed, and rolling with a pneumatic tire roller shall start longitudinally at the sides and proceed towards the center, overlapping on successive trips by at least one-half of the width of the pneumatic tire roller. On superelevated curves, rolling shall begin at the low sides and progress toward the high sides. Alternate trips of the roller shall be slightly different in length. Rolling shall continue until discontinued by the Engineer.

The light pneumatic tire roller shall be operated at speeds directed by the Engineer which shall be between 4 and 12 miles per hour for asphalt surfacing work and between 2 and 6 miles per hour for all other work.

The medium pneumatic tire roller shall be operated at speeds as directed by the Engineer.

Sufficient rollers shall be provided to compact the material in a satisfactory manner, the minimum number of rolling units to be governed by the basis of estimate for rolling shown in the plans and progress in placing the materials to be compacted. The quantity of material placed per hour shall

be determined by averaging the total quantity of material placed within any one working day. When operations are so isolated from one another that one roller unit cannot perform the required compaction satisfactorily, additional roller units shall be provided.

213.4. **Measurement.** Rolling performed as provided above will be measured by the actual hours the pneumatic tire roller unit works as directed by the Engineer.

213.5. **Payment.** The equipment furnished and operated as prescribed by this item and measured as provided under "Measurement" will be paid for at the unit price bid for "Rolling (Light Pneumatic Tire)", "Rolling (Medium Pneumatic Tire) (Type A)" or "Rolling (Medium Pneumatic Tire) (Type B)", as the case may be, which price shall be full compensation for furnishing and operating all equipment, and for all labor, fuel, tools and incidentals necessary to satisfactorily perform the work except sprinkling.

All sprinkling performed as required will be measured and paid for in accordance with the provisions governing the Item, "Sprinkling".

ITEM 214

ROLLING
(Heavy Pneumatic)

214.1. **Description.** "Rolling (Heavy Pneumatic)" shall consist of the compaction of embankment subgrade, subgrade, flexible base, foundation course, roadbed treatment, old concrete pavement (previously broken) or pavements by the operation of approved heavy pneumatic tire rollers as herein specified and as directed by the Engineer.

214.2. **Equipment.** The heavy pneumatic tire roller shall consist of not less than four pneumatic tire wheels, running on axles carrying not more than two wheels, and mounted in a rigid frame and provided with a loading platform or body suitable for ballast loading. All wheels shall be arranged so that they will carry approximately equal loads when operating on uneven surfaces.

The roller under working condition shall have a rolling width of from 8 feet to 10 feet, and shall be so designed that, by ballast loading, the gross load may be varied uniformly from 25 tons to 50 tons. The tires shall be capable of operating under the various loads with variable air pressure up to 150 pounds per square inch. The operating load and tire air pressure shall be within the range of the manufacturer's chart as directed by the Engineer. Tires shall be practically full of liquid. (Tires shall be considered as being practically full when liquid will flow from the valve stem of a fully inflated tire with the stem in the uppermost position). The Contractor shall

furnish the Engineer charts or tabulations showing the contact areas and contact pressures for the full range of the tire inflation pressures and for the full range of loadings for the particular tires furnished.

There shall be a sufficient quantity of ballast available to load the equipment to a maximum gross weight of 50 tons.

Rubber tired tractive equipment shall be used on base courses and asphalt pavements. Other type tractive equipment may be used on embankment subgrade. The heavy pneumatic tire roller unit shall be capable of turning 180 degrees in the crown width.

The heavy pneumatic tire roller shall be drawn by a suitable crawler type tractor, or rubber tired tractor of adequate effort, or may be of the self-propelled type, and the roller, when drawn or propelled by either type of equipment, shall be considered a heavy pneumatic tire roller unit.

In lieu of the rolling equipment specified, the Contractor may, upon written permission from the Engineer, operate other compacting equipment that will produce equivalent relative compaction in the same period of time as the specifed equipment. If the substituted compaction equipment fails to produce the desired compaction within the same period of time as would be expected of the specified equipment, as determined by the Engineer, its use shall be discontinued.

Rollers shall be maintained in good repair and operating condition and shall be approved by the Engineer.

214.3. Construction Methods. This work shall be done only when directed by the Engineer. The embankment layer or the base course shall be sprinkled if directed. Rolling with the pneumatic tire roller shall start longitudinally at the sides and proceed toward the center, overlapping on successive trips by at least one-half the width of the pneumatic tire roller. On superelevated curves, rolling shall begin at the low sides and progress to the high sides. Alternate trips of the roller shall be slightly different in length. Rolling shall continue until discontinued by the Engineer.

The rollers shall be operated at speeds directed by the Engineer which shall be between 2 and 6 miles per hour.

Sufficient rollers shall be provided to compact the material in a satisfactory manner, the minimum number of roller units to be governed by the basis of estimate for rolling shown on the plans and progress in placing the materials to be compacted. The quantity of material placed per hour shall be determined by averaging the total quantity of material placed within any one working day. When operations are so isolated from one another that one roller unit cannot perform the required compaction satisfactorily, additional roller units shall be provided.

214.4. Measurement. Rolling performed as provided above will be measured by the actual hours the heavy pneumatic tire roller unit works as directed by the Engineer.

214.5. Payment. The equipment furnished and operated as prescribed by this item and measured as provided under "Measurement" will be paid for at the unit price bid for "Rolling (Heavy Pneumatic)", which price shall be full compensation for furnishing and operating all equipment; and for all labor, tools, fuel and incidentals necessary to satisfactorily perform the work except sprinkling.

All sprinkling performed as required will be measured and paid for in accordance with the provisions governing the Item, "Sprinkling".

ITEM 215

ROLLING
(Grid)

215.1. Description. "Rolling (Grid)" shall consist of the compaction of embankments and bases or for breaking up existing asphalt mats or base materials, by the operation of approved grid rollers as herein specified and as directed by the Engineer. This type roller is to be used only where the character of materials is suitable to this method of rolling.

215.2. Equipment. The grid roller shall consist of two metal rollers 66 inches minimum diameter, 32 inches minimum width, mounted in a rigid frame with weight boxes to permit weight to be varied between 10,000 and 25,000 pounds. The surface of the roller shall consist of a cast or welded steel fabric grid, composed of undulating bars 1½ inches wide spaced 5 inches center to center each way. The bars shall be undulating in each direction approximately 1 inch between the high and low points. The grid roller shall be drawn by suitable crawler type tractor of adequate tractive effort. The grid roller, conforming to the above prescribed requirements, drawn by an approved crawler type tractor, shall be considered a roller unit.

Where turning is impractical or detrimental to the work, and when specifically directed by the Engineer, the roller shall be attached to the front end of the power equipment.

In lieu of the rolling equipment specified, the Contractor may, upon written permission from the Engineer, operate other compacting equipment that will produce equivalent relative compaction in the same period of time as the specified equipment. If the substituted compaction equipment fails to produce the desired compaction within the same period of time as would be expected of the specified equipment, as determined by the Engineer, its use shall be discontinued.

Rollers shall be maintained in good repair and operating condition and shall be approved by the Engineer.

215.3. Construction Methods. This work shall be done only when directed by the Engineer. The embankment layer or the base course shall be sprinkled if directed, and rolling with a grid roller unit shall start longitudinally at the sides and proceed towards the center, overlapping on successive trips by at least one-half of the width of the grid roller unit. On superelevated curves, rolling shall begin at the low sides and progress toward the high sides. Alternate trips of the unit shall be slightly different in length. Rolling shall continue until discontinued by the Engineer.

Old asphalt mats or pit run material to be broken up shall be rolled with a grid roller unit as directed by the Engineer.

The grid roller unit, unless otherwise directed, shall be operated at a speed between 2 and 3 miles per hour.

Sufficient rollers shall be provided to perform the work in a satisfactory manner, the minimum number of rolling units to be governed by the basis of estimate for rolling shown on the plans and progress in placing the materials to be compacted. The quantity of material placed per hour shall be determined by averaging the total quantity of material placed within any one working day. When operations are so isolated from one another that one roller unit cannot perform the required compaction satisfactorily, additional roller units shall be provided.

215.4. Measurement. Rolling performed as provided above will be measured by the actual hours the grid roller unit works as directed by the Engineer.

215.5. Payment. The equipment furnished and operated as prescribed by this item and measured as provided under "Measurement" will be paid for at the unit price bid for "Rolling (Grid)", which shall be full compensation for furnishing and operating all equipment; and for all labor, fuel, tools and incidentals necessary to satisfactorily perform the work except sprinkling.

All sprinkling performed as required will be measured and paid for in accordance with the provisions governing the Item, "Sprinkling".

ITEM 216

ROLLING
(Proof)

216.1. Description. "Rolling (Proof)" shall consist of furnishing and operating heavy pneumatic tired compaction equipment for compacting and testing the compaction of embankment subgrade, subgrade, flexible base,

foundation course, roadbed treatment or pavements. Proof rolling is designed to either achieve additional compaction, locate unstable areas, or both.

216.2. **Equipment.** The proof rolling equipment shall consist of not less than four pneumatic tired wheels, running on axles carrying not more than two wheels, and mounted in a rigid frame and provided with loading platform or body suitable for ballast loading. All wheels shall be arranged so that they will carry approximately equal loads when operating on uneven surfaces.

The proof roller under working conditions shall have a rolling width of from 8 feet to 10 feet, and shall be so designed that, by ballast loading, the gross load may be varied uniformly from 25 tons to 50 tons. The tires shall be capable of operating under the various loads with variable air pressure up to 150 pounds per square inch. Tires shall be practically full of liquid. (Tires shall be considered as being practically full when liquid will flow from the valve stem of a fully inflated tire with the stem in the upper-most position). The operating load and tire pressure shall be within the range of the manufacturer's chart as directed by the Engineer. The Contractor shall furnish the Engineer charts or tabulations showing the contact areas, and contact pressures for the full range of tire inflation pressures and for the full range of loadings for the particular tires furnished.

The proof roller shall be drawn by a suitable crawler type tractor or rubber tired tractor of adequate tractive effort, or may be of self-propelled type, and the roller unit when drawn or propelled by either type of equipment shall be considered a heavy pneumatic tire proof roller unit.

There shall be a sufficient quantity of ballast available to load the equipment to a maximum gross weight of 50 tons.

Rubber tired tractive equipment shall be used on base courses and asphalt pavements. Other type tractive equipment may be used on embankment subgrade. The heavy pneumatic tire roller unit shall be capable of turning 180 degrees in the crown width.

In lieu of the rolling equipment specified, the Contractor may, upon written permission from the Engineer, operate other compacting equipment that will produce equivalent results in the same period of time as the specified equipment. If the substituted compaction equipment fails to produce the desired results within the same period of time as would be expected of the specified equipment, as determined by the Engineer, its use shall be discontinued.

216.3. **Construction Methods.** This work shall be done only when directed by the Engineer. On embankment compaction each layer will be placed to specified thickness at optimum moisture and compacted with conventional equipment to comply with requirements of governing embank-

ment item. Prior to placing the overlaying course the layer shall be further compacted with the proof roller. Proper moisture control is of utmost importance in proof rolling. The moisture content shall range from optimum moisture to not more than 3 percent below optimum moisture for the particular layer of material being rolled. For cohesive soils whose optimum moisture is near its plastic limit, the range shall be from 2 percent to 3 percent below optimum moisture.

Within the ranges set forth in Article 216.2., the load and tire inflation pressures shall be adjusted as directed by the Engineer. It is proposed to use a contact pressure corresponding as nearly as practical to the maximum supporting value of the subgrade. As stronger layers are placed the load and tire inflation pressures shall be increased to the maximum contact pressure specified. A minimum of two coverages of the proof roller will be required. Each succeeding trip of the proof roller shall be offset by not greater than one tire width.

Where the operation of the proof roller unit shows an area to be unstable or non-uniform, such area shall be brought to satisfactory stability and uniformity by additional compaction or by removal of unsuitable materials, replacement with suitable materials and recompaction. The subgrade shall then be checked for conformity with line and grade, and any irregularities corrected.

Rollers shall be operated at speeds directed by the Engineer which shall be between 2 and 6 miles per hour.

Flexible bases, foundation courses, roadbed treatments or asphaltic pavements shall be compacted and tested in a manner similar to that described above and as directed by the Engineer.

216.4. Measurement. Proof rolling performed as provided above will be measured by the actual hours the heavy pneumatic tire proof roller unit works as directed by the Engineer.

216.5. Payment. The equipment furnished and operated as prescribed by this item and measured as provided under "Measurement" will be paid for at the unit price bid for "Rolling (Proof)", which price shall be full compensation for furnishing and operating all equipment; for all labor, tools, fuel and incidentals necessary to satisfactorily perform the work, except sprinkling. All sprinkling performed as required, will be measured and paid for as follows:

(a) When used in connection with density control, sprinkling will not be paid for directly but will be subsidiary to other bid items.

(b) When used in connection with ordinary compaction, all sprinkling will be measured and paid for in accordance with the provisions governing the Item, "Sprinkling".

Unless otherwise provided on the plans or in the special provisions, payment for reworking unstable or non-uniform areas, removing and replacing materials, addition of stabilizing materials, and all compaction and incidentals necessary to correct all irregularities will not be made directly but will be considered as subsidiary to the various bid items.

ITEM 230

ROADBED TREATMENT

Description. "Roadbed Treatment" shall consist of treating designated sections of the roadbed by the addition of suitable material and shall be constructed as herein specified in conformity with the typical sections shown on the plans and to the lines and grades as established by the Engineer.

When plans include the Item "Roadbed Treatment (Stockpiled)" with a specified type shown, the material shall be stockpiled at sites designated on the plans or by the Engineer. The Contractor shall be responsible for the proper preparation of stockpile areas before roadbed treatment is placed thereon, including leveling and cleaning of debris necessary for protection of the roadbed treatment to prevent any contamination thereof.

230.2. Material. The material shall be approved by the Engineer, and shall meet the following requirements for the type or types specified on the plans:

Type A. This material shall consist of selected clay or calcareous clay, with or without stones, conglomerate or sand of a proper quality to secure a well bonded course.

Type B. This material shall consist of sand or other suitable granular material, free from lumps of earth, vegetation or other objectionable matter.

Type C. This material shall conform to the specification requirements shown on the plans.

Tolerances: The limits establishing reasonably close conformity with the specified gradation and plasticity index are defined by the following:

The Engineer may accept the material, providing not more than 2 out of 10 consecutive gradation tests performed are outside the specified limit on any individual or combination of sieves by no more than 5% and where no two consecutive tests are outside the specified limit.

The Engineer may accept the material providing not more than 2 out of 10 consecutive plasticity index samples tested are outside the specified limit by no more than 2 points and where no two consecutive tests are outside the specified limit.

230.3. Material Sources. Should the Contractor elect to obtain the specified materials from local pits, the material may be secured from the sources shown on plans or approved by the Engineer.

Material pits shall be stripped, if required, and any material considered unacceptable by the Engineer shall be removed from the pits.

Pits, as utilized, shall be opened up in such manner as to immediately expose the vertical faces of all the various strata of acceptable material and, unless otherwise directed, the material shall be secured in successive vertical cuts extending through all of the exposed strata, in order that a uniformly mixed material will be secured.

230.4. Construction Methods. Prior to the inauguration of this work the roadbed shall have been graded and/or shaped, compacted and finished to conform to the typical sections shown on the plans and to the lines and grades established by the Engineer. Unstable material or material not intended to remain in the roadbed for use in this work shall have been removed and all operations incidental thereto shall have been performed and, if so specified, paid for under other items of work. The roadbed shall be firm and free of holes, ruts and depressions and in condition to receive the roadbed treatment.

The material shall be delivered in approved vehicles of uniform capacity, and it shall be the charge of the Contractor that the required amount of specified material shall be delivered in each 100-foot station. The material shall be spread to proper section by the use of blades, drags or other suitable equipment.

If the material is not well mixed or contains oversize material, it shall be thoroughly mixed, after spreading, and all oversize material shall be broken by raking, blading, disking, harrowing, scarifying or other approved methods.

Upon completion of this work, the course shall be reshaped to conform to the typical sections shown on plans and prepared and finished to receive the succeeding course or layer of subbase, base or pavement structure.

The surface of the course shall be maintained in a smooth condition, free from undulations and ruts, until other work is placed thereon, or the work is accepted. During this maintenance, additional material shall be added, if ordered by the Engineer, as necessary for the maintenance of a satisfactory surface.

In those cases where additional compaction is desired, it shall be obtained by the method of compaction hereinafter specified as the "Ordinary Compaction" method or the "Density Control" method of compaction as indicated on the plans.

When the plans indicate that the "Ordinary Compaction" method is to be used, the following provisions shall apply:

The material shall be sprinkled and rolled as directed by the Engineer. All irregularities, depressions or weak spots which develop shall be corrected immediately by scarifying the areas affected, adding or removing material as required, reshaping and recompacting by sprinkling and rolling.

When the plans indicate that the "Density Control" method of compaction is to be used, the following provisions shall apply:

The course shall be sprinkled as required and compacted to the extent necessary to provide not less than the percent density shown on the plans as determined in accordance with Test Method Tex-114-E. The field density determination shall be made in accordance with Test Method Tex-115-E. In addition to the requirements specified for density, the entire depth of the roadbed treatment as shown on the plans shall be compacted to the extent necessary to remain firm and stable under construction equipment. After each section of roadbed treatment is completed, tests as necessary will be made by the Engineer. If the material fails to meet the density specified, it shall be reworked as necessary to meet these requirements. All irregularities, depressions or weak spots which may develop shall be corrected immediately by scarifying the areas affected, adding or removing material as required, reshaping and recompacting by sprinkling and rolling. The completed course shall be smooth and free of segregation, ruts or depressions. The compacted roadbed treatment shall be maintained by the Contractor until subsequent base and surface courses have been completed, and should the roadbed treatment due to any reason or cause, lose the required stability, density and finish before the subsequent base and surfacing have been completed, it shall be recompacted and refinished at the sole expense of the Contractor.

230.5. Measurement. Work and accepted material as prescribed for this item will be measured by the cubic yard of material in vehicles as delivered on the road or by the ton of 2,000 pounds dry weight as delivered on the road. The dry weight will be determined by deducting the weight of the moisture in the material at the time of weighing from the gross weight of the material. The moisture in the material will be determined by Test Method Tex-103-E, at least one time each day and more often if conditions warrant.

Material to be stockpiled will be measured in the same manner as that delivered on the road, except that it will be measured as delivered to the stockpile site.

When the plans indicate that measurement of the material is to be by the ton, a set of standard platform truck scales conforming to the require-

ments of the Item, "Weighing and Measuring Equipment", shall be furnished by the Contractor and placed at a location approved by the Engineer.

Measurement for hauling material into each quarter mile beyond the first quarter mile will be based on the shortest practical haul route between the center of mass of the designated or approved material source or sources and point of delivery on the road.

230.6. Payment. The work performed and material furnished as prescribed for this item and measured in accordance with the method indicated on the plans and proposal and in accordance with the applicable provisions of "Measurement" above, will be paid for at the unit price bid by one of the following methods: (1) "Roadbed Treatment (Ordinary Compaction)" of the type specified and "Additional Quarter Mile Haul" or (2) "Roadbed Treatment (Density Control)" of the type specified and "Additional Quarter Mile Haul".

The unit prices bid for roadbed treatment shall each be full compensation for shaping and fine grading the roadbed; for furnishing all materials; for all royalty and freight involved; for furnishing scales and labor involved in weighing the material when required; loosening, excavating and loading the material; hauling the first one-quarter mile and delivering on the road; for spreading, mixing, breaking oversize material and finishing; and for all manipulations, labor, tools, equipment and incidentals necessary to complete the work except as follows:

When the plans include the Item "Roadbed Treatment (Stockpiled)", of the type specified, the unit prices bid for this material shall be full compensation for preparing the stockpile area; for all royalty and freight involved; for furnishing scales and labor involved in weighing the material when required; for loosening or blasting, excavating, screening and crushing; for temporary stockpiling where required; for loading all materials; for hauling the first quarter mile and delivering in the stockpile; for spreading and shaping the material in the stockpile; and for all manipulations, labor, tools and incidentals necessary to complete the work except as otherwise provided for in this specification.

When "Ordinary Compaction" is indicated on the plans, all sprinkling and rolling performed as required will be measured and paid for in accordance with the provisions of the Items "Sprinkling" and "Rolling", respectively.

When "Density Control" is indicated on the plans, sprinkling and rolling will not be paid for directly but the cost of all sprinkling and rolling will be subsidiary to the other bid items.

Unless otherwise shown on the plans, hauling material into each quarter mile beyond the first quarter mile will be paid for at the unit price bid for "Additional Quarter Mile Haul".

Unless otherwise shown on plans, all stripping performed as required will be measured and paid for in accordance with the provisions of the Item "Stripping".

ITEM 246

FOUNDATION COURSE

246.1. **Description.** "Foundation Course" shall consist of a foundation course for surface course or for additional foundation courses; and shall be composed of material or mixture of materials constructed in conformity with the typical sections shown on plans and to the lines and grades as established by the Engineer.

246.2. **Material.** The material source shall be approved by the Engineer. Only such material removed from pits or quarries or designated sources within roadway limits or channels reserved for use under this item as directed and considered unacceptable by the Engineer shall be classified and paid for as "Stripping". The material shall be free of vegetation or other objectionable matter and when prepared by standard Test Methods Tex-101-E and Tex-106-E the material and/or mixtures of materials, shall meet the requirements specified by the plans and shall be unprocessed or processed as may be necessary to comply with the requirements set out in the plans. Samples for testing the material shall be taken prior to the compaction operations.

Tolerances: The limits establishing reasonably close conformity with the specified gradation and plasticity index are defined by the following:

The Engineer may accept the material, providing not more than 2 out of 10 consecutive gradation tests performed are outside the specified limit on any individual or combination of sieves by no more than 5% and where no two consecutive tests are outside the specified limit.

The Engineer may accept the material providing not more than 2 out of 10 consecutive plasticity index samples tested are outside the specified limit by no more than 2 points and where no two consecutive tests are outside the specified limit.

246.3. **Material Sources.** The specified material shall be produced from sources shown on the plans or approved by the Engineer. Where pits, quarries, roadway or channel sources are utilized, they shall be opened and operated in a manner to provide proper mixture of acceptable material. Segregation of materials will be considered unacceptable by the Engineer.

Vegetation and stripping from pits or quarries shall be disposed of as directed by the Engineer and the site shall be left in a satisfactory and sightly condition.

When material is obtained from sources reserved from roadway cuts or channels, only that material actually used in the work under this item shall be measured and paid for as provided herein, and the remainder of the material in the source shall be measured and paid for as "Roadway Excavation" or "Channel Excavation" in accordance with the provisions of those items, and all provisions thereof, including completion to established alignment, grades and cross sections, shall apply.

When shown on the plans, the processed material shall not be hauled directly to the road but shall be temporarily stockpiled on the area designated on the plans, or approved by the Engineer. The stockpile shall be not less than the height indicated and shall be made up of layers of processed material not to exceed the depth shown on the plans. After a sufficient stockpile, as determined by the Engineer, has been constructed as specified, the Contractor may proceed with loading from the stockpile for delivery to the road. In loading from the stockpile for delivery to the road, the material shall be loaded by making successive vertical cuts through the entire depth of the stockpile.

246.4. Construction Methods. Prior to the inauguration of this work the roadbed shall have been graded and/or shaped, compacted and finished to conform to the typical sections shown on the plans and to the lines and grades established by the Engineer. Unstable material or material not intended to remain in the roadbed for use in this work shall have been removed and all operations incident thereto shall have been performed and, if so specified, paid for under other items of work.

(1) Preparation of Subgrade. The roadbed shall be shaped to conform to the subgrade section indicated on plans. It shall be firm and to the line and grade established by the Engineer and free of holes, ruts and depressions.

(2) Placing and Manipulation of Material. The material shall be delivered in approved vehicles of uniform capacity and it shall be the charge of the Contractor that the required amount of material for each operation is delivered and uniformly distributed in each 100-foot station. Material shall be uniformly and thoroughly mixed on the subgrade or preceding course by blading, harrowing, disking or other approved methods before compaction. Where plans indicate an admixture of materials to be performed on the subgrade, the heavier course shall be uniformly and thoroughly mixed and spread prior to delivery of other material which shall then be spread and the combined material uniformly and thoroughly mixed by operations above specified. Where plans indicate an admixture using material existing on the roadway, the existing material shall be scarified to the depth indicated on plans, pulverized by use of blades, scarifiers, harrows, disks or other imple-

ments, uniformly and thoroughly mixed and placed in a layer prior to the delivery of the material to be added. The added material shall be uniformly distributed and the two materials shall then be uniformly and thoroughly mixed by operations above specified.

The Contractor shall at all times provide proper and sufficient equipment and conduct his operations in a satisfactory and workman like manner. Failure to manipulate materials promptly and perform the various operations required in a continuous and coordinated manner will be grounds for suspension of any part of the work.

The course shall be compacted by the method of compaction hereinafter specified as the "Ordinary Compaction" method or the "Density Control" method of compaction as indicated on the plans.

When the plans indicate that the "Ordinary Compaction" method is to be used, the following provisions shall apply:

Prior to compaction the mixed material shall be windrowed. It shall then be bladed to position for compaction by sprinkling and rolling in thin, successive layers and approved suitable equipment shall be kept in operation to maintain the section and grade. Compaction shall be carried to the extent directed by the Engineer. Irregularities which may develop shall be corrected immediately by scarifying the areas affected, adding and incorporating suitable material as required, recompacting and reshaping. The completed course shall be smooth and free of segregation, ruts or depressions.

When the plans indicate that the "Density Control" method of compaction is to be used the following provisions shall apply:

The course shall be sprinkled as required and compacted to the extent necessary to provide not less than the percent density as hereinafter specified under "Density". In addition to the requirements specified for density, the full depth of foundation course shown on the plans shall be compacted to the extent necessary to remain firm and stable under construction equipment. After each section of foundation course is completed, tests as necessary will be made by the Engineer. If the material fails to meet the density requirements, it shall be reworked as necessary to meet these requirements. Throughout this entire operation the shape of the course shall be maintained by blading, and the surface upon completion shall be smooth and in conformity with the typical section shown on the plans and to the established lines and grades. All irregularities, depressions or weak spots which may develop shall be corrected immediately by scarifying the areas affected, adding suitable material as required, reshaping and recompacting by sprinkling and rolling. Should the foundation course, due to any reason or cause, lose the required stability, density and finish before the succeeding course or surfacing is complete, it shall be recompacted and refinished at the sole expense of the Contractor.

(3) **Succeeding Courses.** Construction methods shall be the same as prescribed for the first course.

(4) **Density.** When the "Density Control" method of compaction is indicated on the plans each course of foundation course shall be compacted to the percent density shown on the plans. The testing will be as outlined in Test Method Tex-114-E. It is the intent of this specification to provide in that part of the foundation course included in the top 8 inches immediately below the finished surface of the roadway, not less than 100 percent of the density as determined by the compaction ratio method. Field density determination shall be made in accordance with Test Method Tex-115-E.

Tolerances: The limits establishing reasonably close conformity with percent density specified are defined by the following:

The Engineer may accept the work, providing not more than 25% of the density tests performed each day are outside the specified density by no more than 3 pounds per cubic foot and where no two consecutive tests on continuous work are outside the specified limits.

246.5. Measurement. Work and accepted material as prescribed for this item will be measured by the cubic yard of material in vehicles as delivered on the road or by the ton of 2000 pounds dry weight as delivered on the road. The dry weight will be determined by deducting the weight of the moisture in the material at the time of weighing from the gross weight of the material. The moisture in the material will be determined by Test Method Tex-103-E, at least one time each day and more often if conditions warrant.

When the plans indicate that measurement of the material is to be by the ton, a set of standard platform truck scales conforming to the requirements of the Item, "Weighing and Measuring Equipment", shall be furnished by the Contractor and placed at a location approved by the Engineer.

Measurement for hauling material into each quarter mile beyond the first quarter mile will be based on the shortest practical haul route between the center of mass of the designated or approved material source or sources and point of delivery on the road.

246.6. Payment. Except as provided herein the work performed and material furnished as prescribed for this item and measured in accordance with the method indicated on the plans and proposal and in accordance with the applicable provisions of "Measurement" above, will be paid for at the unit price bid, by one of the following methods: (1) "Foundation Course (Ordinary Compaction)" and "Additional Quarter Mile Haul" or (2) "Foundation Course (Density Control)" and "Additional Quarter Mile Haul".

The unit prices bid for foundation course shall each be full compensation for shaping and fine grading the roadbed; for furnishing all materials; for all royalty and freight involved; for furnishing scales and labor involved in weighing the material when required; for loosening or blasting, excavating, screening, crushing, sledging, hand picking or other suitable methods of reducing objectionable or oversize material; for temporary stockpiling where required; for loading all materials; for hauling the first one quarter mile and delivering on the road, for all mixing involved; for spreading, blading, dragging, shaping and finishing; for maintaining; and for all manipulation, labor, tools and incidentals necessary to complete the work except as follows:

When "Ordinary Compaction" is indicated on the plans, all sprinkling and rolling performed as required will be measured and paid for in accordance with the provisions governing the Items of "Sprinkling" and "Rolling" respectively.

When "Density Control" is indicated on the plans, sprinkling and rolling will not be paid for directly but the cost of all sprinkling and rolling will be subsidiary to other bid items.

Unless specified otherwise on plans hauling base course material into each quarter mile beyond the first quarter mile will be paid for at the unit price bid for "Additional Quarter Mile Haul".

Unless otherwise shown on the plans, all stripping performed as required will be measured and paid for in accordance with the provisions governing the Item, "Stripping".

Excavation required in the preparation of shoulders and slopes to conform to the typical sections shown on the plans will be paid for in accordance with the provisions of the items covering this phase of the work as indicated on the plans, with the provision that work will be measured and paid for once only, regardless of the manipulations involved.

ITEM 248

FLEXIBLE BASE

248.1. **Description.** This item shall consist of a foundation course for surface course or for other base courses; shall be composed of either caliche, (argillaceous limestone, calcareous or calcareous clay particles, with or without stone, conglomerate, gravel, sand or other granular materials), crushed stone, gravel, iron ore topsoil, shell, etc.; and shall be constructed as herein specified in one or more courses in conformity with the typical sections shown on plans and to the lines and grades as established by the Engineer.

248.2. Materials. The material shall be crushed or uncrushed as necessary to meet the requirements hereinafter specified, and shall consist of durable coarse aggregate particles mixed with approved binding materials. Only such material removed from the pits as directed and considered unacceptable by the Engineer shall be classified and paid for as "Stripping".

248.3. Types. Type A material shall consist of crushed or broken aggregate (excluding gravel aggregate). Type B material shall consist of gravel aggregate. Type C material shall consist of iron ore topsoil. Type D material shall consist of shell aggregate with sand admixture. Type E material shall consist of shell aggregate with sand and caliche admixture. Type F material shall consist of caliche. Unless the type of material to be used is specified on the plans, the Contractor may use any one of these types, provided the material proposed for use by the Contractor meets the requirements set forth in the specification test limits tabulation.

248.4. Grades. It is the intent of this specification that unless otherwise indicated on the plans, the final course of the base material shall consist of Grades 1 or 2 and other base courses or subbase materials may consist of Grades 1, 2, 3 or 4. All grades shall, when tested by standard Department laboratory test procedures, meet the physical requirements as set forth in the specification test limits tabulation.

Where pilot grading is required in the plans, the Engineer will designate the grading and allowable tolerances to govern during production. The flexible base produced shall not vary from the designated pilot grading by more than the tolerances specified by the Engineer. The pilot grading may be varied by the Engineer as necessary to insure that the base material produced will meet the physical requirements specified.

Testing of flexible base materials shall be in accordance with the following Department standard laboratory test procedures:

Preparation for Soil Constants and Sieve Analysis	Tex-101-E
Liquid Limit	Tex-104-E
Plastic Limit	Tex-105-E
Plasticity Index	Tex-106-E
Sieve Analysis	Tex-110-E
Wet Ball Mill	Tex-116-E
Triaxial Test	Tex-117-E (Part I or II)

Unless otherwise specified on the plans, samples for testing the material for Soil Constants, Gradation and Wet Ball Mill shall be taken prior to the compaction operations.

Unless otherwise specified on the plans, samples for triaxial tests shall be taken from the stockpile or from production, as directed by the Engineer, where temporary stockpiling is required and from production where temporary stockpiling is not required.

PHYSICAL REQUIREMENTS FOR FLEXIBLE BASE MATERIALS

TYPES	GRADES Grade 1: (Triaxial Class 1) Min. compressive strength, psi: 45 at 0 psi lateral pressure and 175 at 15 psi lateral pressure	Grade 2: (Triaxial Class 1 to 2.3) Min. compressive strength, psi: 35 at 0 psi lateral pressure and 175 at 15 psi lateral pressure	Grade 3: (Unspecified Triaxial Class)	Grade 4
TYPE A Crushed or Broken Aggregate (excluding gravel aggregate)	Retained on % Sq. Sieve 1-3/4".....0 7/8".....10-35 3/8".....30-50 No. 4.....45-65 No. 40.....70-85 Max LL.....35 Max PI.....10 Wet Ball Mill Max. Amt.....40 Max. Increase in Passing No. 40.....20	Retained on % Sq. Sieve 1-3/4".....0-10 No. 4.....45-75 No. 40.....60-85 Max LL.....40 Max PI.....12 Wet Ball Mill Max. Amt.....50 Max. Increase in Passing No. 40.....20	Retained on % Sq. Sieve 1-3/4".....0-10 No. 40.....60-85 Max LL.....45 Max PI.....15 Wet Ball Mill Max. Amt.....55 Max. Increase in Passing No. 40.....20	As Shown on Plans
TYPE B Gravel Aggregate		Retained on % Sq. Sieve 1-3/4".....0-10 No. 4.....30-75 No. 40.....70-85 Max LL.....35 Max PI.....12	Retained on % Sq. Sieve 1-3/4.....0-5 No. 4.....30-75 No. 40.....65-85 Max LL.....35 Max PI.....12	As Shown on Plans
TYPE C Iron Ore Topsoil		Retained on % Sq. Sieve 2-1/2".....0 No. 40.....50-85 Max LL.....35 Max PI.....12	Retained on % Sq. Sieve 2-1/2".....0 No. 40.....45-85 Max LL.....35 Max PI.....12	As Shown on Plans
TYPE D Sand-Shell		Retained on % Sq. Sieve 1-3/4".....0-10 No. 4.....45-65 No. 40.....50-70 Max LL.....35 Max PI.....12	Retained on % Sq. Sieve 1-3/4".....0-10 No. 40.....45-65 Max LL.....35 Max PI.....12	As Shown on Plans
TYPE E Shell with Sand and Caliche Admixture		Retained on % Sq. Sieve 1-3/4".....0 No. 40.....45-65 Max LL.....35 Max PI.....10	Retained on % Sq. Sieve 1-3/4".....0 No. 40.....45-65 Max LL.....35 Max PI.....12	As Shown on Plans

TYPE F Caliche		Retained on % Sq. Sieve 1-3/4".....0 No. 4.....45-75 No. 40.....50-85 Max LL.....40 Max PI.....12	Retained on % Sq. Sieve 1-3/4".....0 No. 40.....50-85 Max LL.....40 Max PI.....12	As Shown on Plans

Tolerances: When tolerances are permitted by the plans, the limits establishing reasonably close conformity with the specified gradation and plasticity index are defined by the following:

The Engineer may accept the material, providing not more than 2 out of 10 consecutive gradation tests performed are outside the specified limit on any individual or combination of sieves by no more than 5% and where no two consecutive tests are outside the specified limit.

The Engineer may accept the material providing not more than 2 out of 10 consecutive plasticity index samples tested are outside the specified limit by no more than 2 points and where no two consecutive tests are outside the specified limit.

248.5. **Material Sources.** Should the Contractor elect to produce the specified material from local pits, the material shall be secured from the sources shown on plans or approved by the Engineer. These pits as utilized shall be opened up in such a manner as to immediately expose the vertical faces of all of the various strata of acceptable material and, unless otherwise directed, the material shall be secured (by blasting if necessary) in successive vertical cuts extending through all of the exposed strata.

When shown on the plans, the material shall not be hauled directly to the road but shall be stockpiled on the area designated on the plans. The stockpile shall be not less than the height indicated and shall be made up of layers of material not to exceed the depth shown on the plans. After a sufficient stockpile has been constructed as specified on the plans, the Contractor may proceed with loading from the stockpile for delivery to the road. In loading from the stockpile for delivery to the road, the material shall be loaded by making successive vertical cuts through the entire depth of the stockpile.

248.6. **Construction Methods.**

(1) **Preparation of Subgrade.** The roadbed shall be excavated and shaped in conformity with the typical sections shown on plans and to the lines and grades as established by the Engineer. All unstable or otherwise objectionable material shall be removed from the subgrade and replaced with approved material. All holes, ruts and depressions shall be filled with

approved material and, if required, the subgrade shall be thoroughly wetted with water and reshaped and rolled to the extent directed in order to place the subgrade in an acceptable condition to receive the base material. The surface of the subgrade shall be finished to line and grade as established and in conformity with the typical section shown on plans, and any deviation in excess of 1/2 inch in cross section and in a length of 16 feet measured longitudinally shall be corrected by loosening, adding or removing material, reshaping and recompacting by sprinkling and rolling. Sufficient subgrade shall be prepared in advance to insure satisfactory prosecution of the work. Material excavated in the preparation of the subgrade shall be utilized in the construction of adjacent shoulders and slopes or otherwise disposed of as directed, and any additional material required for the completion of the shoulders and slopes shall be secured from sources indicated on plans or designated by the Engineer.

(2) **First Course, Type A, Type B, Type C and Type F Material.** Immediately before placing the base material, the subgrade shall be checked as to conformity with grade and section.

The material shall be delivered in approved vehicles of a uniform capacity, and it shall be the charge of the Contractor that the required amount of specified material shall be delivered in each 100-foot station. Material deposited upon the subgrade shall be spread and shaped the same day unless otherwise directed by the Engineer in writing. In the event inclement weather or other unforeseen circumstances render impractical the spreading of the material during the first 24-hour period, the material shall be scarified and spread as directed by the Engineer. The material shall be sprinkled, if directed, and shall then be bladed, dragged and shaped to conform to typical sections as shown on plans. All areas and "nests" of segregated coarse or fine material shall be corrected or removed and replaced with well graded material, as directed by the Engineer. If additional binder is considered desirable or necessary after the material is spread and shaped, it shall be furnished and applied in the amount directed by the Engineer. Such binder material shall be carefully and evenly incorporated with the material in place by scarifying, harrowing, brooming or by other approved methods.

The course shall be compacted by the method of compaction hereinafter specified as the "Ordinary Compaction" method or the "Density Control" method of compaction as indicated on the plans.

When the plans indicate that the "Ordinary Compaction" method is to be used, the following provisions shall apply:

The course shall be sprinkled as required and rolled as directed until a uniform compaction is secured. Throughout this entire operation, the shape of the course shall be maintained by blading and the surface upon completion shall be smooth and in conformity with the typical sections shown on

plans and to the established lines and grades. In that area on which pavement is to be placed, any deviation in excess of 1/4 inch in cross section and in a length of 16 feet measured longitudinally shall be corrected by loosening, adding or removing material, reshaping and recompacting by sprinkling and rolling. All irregularities, depressions or weak spots which develop shall be corrected immediately by scarifying the areas affected, adding suitable material as required, reshaping and recompacting by sprinkling and rolling.

When the plans indicate that the "Density Control" method of compaction is to be used, the following provisions shall apply:

The course shall be sprinkled as required and compacted to the extent necessary to provide not less than the percent density as hereinafter specified under "Density". In addition to the requirements specified for density, the full depth of flexible base shown on the plans shall be compacted to the extent necessary to remain firm and stable under construction equipment. After each section of flexible base is completed, tests as necessary will be made by the Engineer. If the material fails to meet the density requirements, it shall be reworked as necessary to meet these requirements. Throughout this entire operation the shape of the course shall be maintained by blading, and the surface upon completion shall be smooth and in conformity with the typical sections shown on the plans and to the established lines and grades. In that area on which pavement is to be placed, any deviation in excess of 1/4 inch in cross section and in length of 16 feet measured longitudinally shall be corrected by loosening, adding or removing material, reshaping and recompacting by sprinkling and rolling. All irregularities, depressions or weak spots which develop shall be corrected immediately by scarifying the areas affected, adding suitable material as required, reshaping and recompacting by sprinkling and rolling. Should the base course, due to any reason or cause, lose the required stability, density or finish before the surfacing is complete, it shall be recompacted and refinished at the sole expense of the Contractor.

Where Type C material is used, the material shall be scarified, thoroughly wetted, mixed, manipulated, and bladed so as to secure a uniformly wetted material, and pulled in over the subgrade in courses and set under the action of blading and rolling. The work of mixing, blading, rolling, shaping and subsequent maintenance shall be performed by the continuous use of a sufficient number of satisfactory rollers and power maintainers with adequate scarifier attachments.

(3) **First Course Type D Material.** Immediately before placing the base material, the subgrade shall be checked as to conformity with grade and section, and corrections made if necessary.

All materials shall be delivered in approved vehicles of a uniform capacity. The required amount of shell shall be uniformly spread across the sec-

tion and allowed to dry sufficiently to insure proper slaking and mixing of the binder material. Immediately upon completion of the drying period, as determined by the Engineer, the specified amount of sand admixture as required to produce a combined material meeting the requirements herein before specified, shall be spread uniformly across the shell. The material shall then be sprinkled as required and thoroughly mixed by blading and harrowing, or other approved methods.

Failure to proceed with the placing of sand admixture or mixing and placing operations will be grounds for the suspension of placing of shell. Under no conditions will the Contractor be allowed to place an excessive amount of shell without proceeding with the mixing and placing operations.

The course shall be compacted by the method of compaction hereinafter specified as the "Ordinary Compaction" method or the "Density Control" method of compaction as indicated on the plans.

When the plans indicate that the "Ordinary Compaction" method is to be used, the following provisions shall apply:

After mixing, all material shall be windrowed, and then spread over the section in layers not to exceed 2 inches in loose depth. If necessary to prevent segregation, the material shall be wetted in the windrow prior to spreading. After each lift is spread, it shall be sprinkled and rolled to secure maximum compaction as directed by the Engineer. Succeeding layers shall then be placed similarly until the course is completed. All areas and "nests" of segregated coarse or fine material shall be corrected or removed and replaced with well graded material, as directed by the Engineer. The course shall then be sprinkled as required and rolled as directed until a uniform compaction is secured. Throughout this entire operation, the shape of the course shall be maintained by blading; and the surface, upon completion, shall be smooth and in conformity with the typical sections shown on plans, and to the established lines and grades. In that area on which pavement is to be placed, any deviation in excess of 1/4 inch in cross section and in a length of 16 feet measured longitudinally shall be corrected by loosening, adding or removing material, reshaping and recompacting by sprinkling and rolling. All irregularities, depressions or weak spots which develop shall be corrected immediately by scarifying the areas affected, adding suitable material as required, reshaping and recompacting by sprinkling and rolling.

When the plans indicate that the "Density Control" method of compaction is to be used, the compaction method shall be the same as prescribed for Types A, B, C and Type F material.

When indicated on the plans or permitted by the Engineer, Type D material may be mixed in a central mixing plant and delivered to the road as a combined mixture. When this method is used the combined mixture shall

meet the requirements for Type D material as herein before specified and the placing and compaction requirements shall be the same as prescribed for Types A, B, C and Type F material.

(4) **First Course, Type E Material.** The construction methods for placing the first course of Type E material shall be the same as prescribed for Type D material except that after the shell and sand have been placed, the prescribed amount of caliche shall then be spread across the sand and shell. The composite mixture shall then be sprinkled as required and thoroughly mixed by blading and harrowing or other approved methods.

Compaction of the first course of Type E material shall be the same as prescribed above for Type D material.

Failure to proceed with placing the sand and caliche admixture or mixing and placing operations will be grounds for the suspension of placing of shell. Under no conditions will the Contractor be allowed to place an excessive amount of shell without proceeding with the mixing and placing operations.

(5) **Succeeding Courses.** Construction methods shall be the same as prescribed for the first course. Prior to placing the surfacing on the completed base, the base shall be "dry cured" to the extent directed by the Engineer.

(6) **Density.** When the "Density Control" method of compaction is indicated on the plans each course of flexible base shall be compacted to the percent density shown on the plans. The testing will be as outlined in Test Method Tex-114-E. It is the intent of this specification to provide in that part of the base included in the top 8 inches immediately below the finished surface of the roadway, not less than 100 percent of the density as determined by the compaction ratio method. Field density determination shall be made in accordance with Test Method Tex-115-E.

Tolerances: When tolerances are permitted by the plans, the limits establishing reasonably close conformity with the percent density specified are defined by the following:

The Engineer may accept the work, providing not more than 25% of the density tests performed each day are outside the specified density by no more than 3 pounds per cubic foot and where no two consecutive tests on continuous work are outside the specified limits.

248.7. Measurement. Work and accepted material as prescribed for this item will be measured by the method described as either Class 1, 2 or 3 as follows and as specified on the plans:

When Class 1 measurement is specified, "Flexible Base", "Sand Admixture", "Caliche" and "Shell" will be measured by the cubic yard in vehicles as delivered on the road.

When Class 2 measurement is specified, "Flexible Base" will be measured by the ton of 2000 pounds dry weight in vehicles as delivered on the road.

When Class 3 measurement is specified, "Flexible Base" will be measured by the cubic yard in its final position as the volume of base course computed in place between the original subgrade or subbase surfaces, and the lines, grades and slopes of the accepted base course by the method of average end areas. When "Flexible Base (Stockpiled)" is specified it shall be measured in its stockpiled position by the method of average end areas as described above.

Measurement for hauling material into each quarter mile beyond the first quarter mile will be based on the shortest practical haul route between the center of mass of the designated material source or sources and point of delivery on the road. No direct measurement for hauling shell will be made.

Type of Material	Class	Method of Measurement
A, B, C and F	1, 2 or 3	As Described Above.
D	1	When provided by the plans, the shell and sand admixture shall be measured separately by the cubic yard in vehicles as delivered on the road.
	2	When provided by the plans, the combined shell and sand admixture shall be measured by the ton of 2000 pounds dry weight as prescribed for Class 2 measurement. No direct measurement for hauling the mixture will be made.
	3	As Described Above.
E	1	The shell, sand admixture and caliche admixture shall be measured separately by the cubic yard in vehicles as delivered on the road as prescribed for Class 1 measurement.
	2	When provided by the plans, the combined shell, sand admixture and caliche admixture shall be measured by the ton of 2000 pounds dry weight as prescribed for Class 2 measurement. No direct measurement for hauling the mixture will be made.
	3	As Described Above.

When the plans indicate that measurement of Type A, B, C, D or F material is to be by the ton, a set of standard platform truck scales conforming

to the requirements of the Item, "Weighing and Measuring Equipment", shall be furnished by the Contractor and placed at a location approved by the Engineer, except that when the material is weighed in mixing or batching, platform truck scales and reweighing will not be necessary.The dry weight will be determined by deducting the weight of the moisture in the material at the time of weighing from the gross weight of the material.

The moisture in the material will be determined by Test Method Tex-103-E, at least one time each day and more often if conditions warrant.

Material to be stockpiled will be measured in the same manner as that delivered on the road except that it will be measured as delivered to the stockpile site.

248.8. **Payment.** The work performed and material furnished as prescribed by this item and measured in accordance with the applicable provisions of "Measurement" above will be paid for as follows:

Type of Material	Description of Bid Items
A, B, C and F	"Flexible Base" of the compaction method specified, type (when specified on the plans), grade and class; and "Additional Quarter Mile Haul".
D	(1) "Flexible Base Type D" of the compaction method, grade and class specified; "Sand Admixture"; and "Additional Quarter Mile Haul (Sand Admixture)". (Cubic yard measurement with the sand admixture and shell being measured separately).
	(2) "Flexible Base Type D, Class 2" of the compaction methods and grade specified. (Ton measurement of combined shell and sand admixture with no direct payment for hauling).
E	"Flexible Base Type E" of the compaction method, grade and class specified. "Sand Admixture"; "Additional Quarter Mile Haul (Sand Admixture)"; "Caliche Admixture"; and "Additional Quarter Mile Haul (Caliche Admixture)".

The unit prices bid shall each be full compensation for shaping and fine grading the roadbed; for securing and furnishing all materials, including all royalty and freight involved; for furnishing scales and labor involved in weighing the material when required; for loosening, blasting, excavating, screening, crushing and temporary stockpiling when required; for loading all materials; for hauling the first one quarter mile and delivering on the road; for spreading, mixing, blading, dragging, shaping and finishing; and for all manipulations, labor, tools and incidentals necessary to complete the work except as follows:

When the plans include the Item "Flexible Base (Stockpiled)", of the type, class and grade specified, the unit prices bid for this material shall be full compensation for preparing the stockpile area; for furnishing all materials; for all royalty and freight involved; for furnishing scales and labor involved in weighing the material when required; for loosening or blasting, excavating, screening and crushing; for temporary stockpiling where required; for loading all materials; for hauling the first quarter mile and delivering in the stockpile; for spreading and shaping the material in the stockpile; and for all manipulations, labor, tools and incidentals necessary to complete the work, except as otherwise provided for in this specification.

When "Ordinary Compaction" is indicated on the plans all sprinkling and rolling performed as required will be measured and paid for in accordance with the provisions governing the Items of "Sprinkling" and "Rolling" respectively.

When "Density Control" is indicated on the plans, sprinkling and rolling will not be paid for directly but the cost of all sprinkling and rolling will be subsidiary to other bid items.

No direct payment will be made for hauling shell. Hauling materials, other than shell, into each quarter mile beyond the first quarter mile will be paid for at the unit price bid for "Additional Quarter Mile Haul", "Additional Quarter Mile Haul (Sand Admixture)" or "Additional Quarter Mile Haul (Caliche Admixture)", except that when bids are requested on combined shell and sand admixture and measurement is by the ton, the cost of all hauling will be subsidiary to other bid items.

Unless otherwise noted on the plans, all excavation required by this item in the preparation of the subgrade and for the completion of the shoulders and slopes will be measured and paid for in accordance with the provisions governing the Items of "Roadway Excavation" and "Borrow" respectively, with the provision that yardage will be measured and paid for once only regardless of the manipulations involved. Where shown on plans, the excavation required in the preparation and shaping of the subgrade, for the completion of the shoulders and slopes and for finishing roadway, shall be performed, measured and paid for in accordance with the provisions governing the Items of "Blading", "Road Grader Work" or "Scraper Work", respectively. Payment under the Item, "Roadway Excavation" will not be allowed within the limits designated for "Blading", "Road Grader Work" or "Scraper Work".

Unless otherwise shown on the plans, all stripping performed as required will be measured and paid for in accordance with the provisions governing the Item, "Stripping".

ITEM 249

FLEXIBLE BASE
(Delivered)

249.1. Description. This item shall consist of a foundation course for surface course or for other base courses; shall be composed of either caliche (argillaceous limestone, calcareous or calcareous clay particles, with or without stone, conglomerate, gravel, sand or other granular materials), crushed stone, gravel, iron ore topsoil, shell, crushed slag, etc.; and shall be constructed as herein specified in one or more courses in conformity with the typical sections shown on plans and to the lines and grades as established by the Engineer.

249.2. Materials. The materials shall be crushed or uncrushed as necessary to meet the requirements hereinafter specified, and shall consist of durable coarse aggregate particles mixed with approved binding materials.

249.3. Types. Type A material shall consist of crushed or broken aggregate (excluding gravel aggregate). Type B material shall consist of gravel aggregate. Type C material shall consist of iron ore topsoil. Type D material shall consist of shell aggregate with sand admixture. Type E material shall consist of shell aggregate with sand and caliche admixture. Type F material shall consist of caliche. Type G material shall consist of crushed slag. Unless the type of material to be used is specified on the plans, the Contractor may use any one of these types, provided the material proposed for use by the Contractor meets the requirements set forth in the specification test limits tabulation.

249.4. Grades. It is the intent of this specification, that unless otherwise indicated on the plans, the final course of the base material shall consist of Grades 1 or 2 and other base courses or subbase materials may consist of Grades 1, 2, 3 or 4. All grades shall, when tested by standard Department laboratory test procedures, meet the physical requirements as set forth in the specification test limits tabulation.

Where pilot grading is required in the plans, the Engineer will designate the grading and allowable tolerances to govern during production. The flexible base produced shall not vary from the designated pilot grading by more than the tolerances specified by the Engineer. The pilot grading may be varied by the Engineer as necessary to insure that the base material produced will meet the physical requirements specified.

Testing of flexible base materials shall be in accordance with the following Department standard laboratory test procedures:

Preparation for Soil Constants and Sieve Analysis	Tex-101-E	Plasticity Index	Tex-106-E
		Sieve Analysis	Tex-110-E
		Wet Ball Mill	Tex-116-E
Liquid Limit	Tex-104-E	Triaxial Tests	Tex-117-E (Part I or II)
Plastic Limit	Tex-105-E		

Unless otherwise specified on the plans, samples for testing the material for Soil Constants, Gradation and Wet Ball Mill shall be taken prior to the compaction operations.

Unless otherwise specified on the plans, samples for triaxial tests shall be taken from the stockpile or from production, as directed by the Engineer, where stockpiling is required and from production where stockpiling is not required.

PHYSICAL REQUIREMENTS FOR FLEXIBLE BASE MATERIALS

	GRADES			
TYPES	Grade 1: (Triaxial Class 1) Min. compressive strength, psi: 45 at 0 psi lateral pressure and 175 at 15 psi lateral pressure	Grade 2: (Triaxial Class 1 to 2-3) Min. compressive strength, psi: 35 at 0 psi lateral pressure and 175 at 15 psi lateral pressure	Grade 3: (Unspecified Triaxial Class)	Grade 4
TYPE A Crushed or Broken Aggregate (excluding gravel aggregate)	Retained on % Sq. Sieve 1-3/4".....0 7/8".....10-35 3/8".....30-50 No. 4.....45-65 No. 40.....70-85 Max LL.....35 Max PI.....10 Wet Ball Mill Max. Amt.....40 Max. Increase in Passing No. 40.....20	Retained on % Sq. Sieve 1-3/4".....0-10 No. 4.....45-75 No. 40.....60-85 Max LL.....40 Max PI.....12 Wet Ball Mill Max. Amt.....50 Max. Increase in Passing No. 40.....20	Retained on % Sq. Sieve 1-3/4".....0-10 No. 40.....60-85 Max LL.....45 Max PI.....15 Wet Ball Mill Max. Amt.....55 Max. Increase in Passing No. 40.....20	As Shown on Plans
TYPE B Gravel Aggregate		Retained on % Sq. Sieve 1-3/4".....0-10 No. 4.....30-75 No. 40.....70-85 Max LL.....35 Max PI.....12	Retained on % Sq. Sieve 1-3/4.....0-5 No. 4.....30-75 No. 40.....65-85 Max LL.....35 Max PI.....12	As Shown on Plans

TYPE C Iron Ore Topsoil		Retained on % Sq. Sieve 2-1/2".....0 No. 40.....50-85 Max LL.....35 Max PI.....12	Retained on % Sq. Sieve 2-1/2".....0 No. 40.....45-85 Max LL.....35 Max PI.....12	As Shown on Plans
TYPE D Sand-Shell		Retained on % Sq. Sieve 1-3/4".....0-10 No. 4.....45-65 No. 40.....50-70 Max LL.....35 Max PI.....12	Retained on % Sq. Sieve 1-3/4".....0-10 No. 40.....45-65 Max LL.....35 Max PI.....12	As Shown on Plans
TYPE E Shell with Sand and Caliche Admixture		Retained on % Sq. Sieve 1-3/4".....0 No. 40.....45-65 Max LL.....35 Max PI.....10	Retained on % Sq. Sieve 1-3/4".....0 No. 40.....45-65 Max LL.....35 Max PI.....12	As Shown on Plans
TYPE F Caliche		Retained on % Sq. Sieve 1-3/4".....0 No. 4.....45-75 No. 40.....50-85 Max LL.....40 Max PI.....12	Retained on % Sq. Sieve 1-3/4".....0 No. 40.....50-85 Max LL.....40 Max PI.....12	As Shown on Plans
TYPE G Crushed Blast Furnace Slag				As Shown on Plans

Tolerances: When tolerances are permitted by the plans, the limits establishing reasonably close conformity with the specified gradation and plasticity index are defined by the following:

The Engineer may accept the material, providing not more than 2 out of 10 consecutive gradation tests performed are outside the specified limits on any individual or combination of sieves by no more than 5% and where no two consecutive tests are outside the specified limits.

The Engineer may accept the material providing not more than 2 out of 10 consecutive plasticity index samples tested are outside the specified limit by no more than two points and where no two consecutive tests are outside the specified limit.

249.5. Material Sources. The material shall be secured from sources obtained by the Contractor. The pits as utilized shall be opened up in such manner as to immediately expose the vertical faces of all the various strata of acceptable material and, unless otherwise directed, the material shall be secured (by blasting if necessary) in successive vertical cuts extending through all of the exposed strata.

When specified on the plans, the material shall be stockpiled prior to delivery on the road. The stockpile shall be not less than the height indicated and shall be made up of layers of material not to exceed the depth shown on the plans. After a sufficient stockpile has been constructed as specified on the plans, the Contractor may proceed with loading from the stockpile for delivery to the road. In loading from the stockpile for delivery to the road, the material shall be loaded by making successive vertical cuts through the entire depth of the stockpile.

If the Contractor elects to produce the Type A material from more than one material or more than one source, each material shall be crushed separately and placed in separate stockpiles so that at least 75 percent of the material in the course aggregate stockpiles will be retained on the No. 4 sieve and at least 70 percent of the material in the fine aggregate stockpile will pass the No. 4 sieve. The materials shall be combined in a central mixing plant in the proportions determined by the Engineer to produce a uniform mixture which meets all of the requirements of the specification. In the event that combinations of the materials produced fail to meet all of the specification requirements, the Contractor will be required to secure other materials which will meet specification requirements. The central mixing plant shall be either the batch or continuous flow type, and shall be equipped with feeding and metering devices which will add the materials into the mixer in the specified quantities. Mixing shall continue until a uniform mixture is obtained.

249.6. Construction Methods.

(1) **Preparation of Subgrade.** The roadbed shall be excavated and shaped in conformity with the typical sections shown on plans and to the lines and grades as established by the Engineer. All unstable or otherwise objectionable material shall be removed from the subgrade and replaced with approved material. All holes, ruts and depressions shall be filled with approved material and, if required, the subgrade shall be thoroughly wetted with water and reshaped and rolled to the extent directed in order to place the subgrade in an acceptable condition to receive the base material. The surface of the subgrade shall be finished to line and grade as established and in conformity with the typical section shown on plans, and any deviation in excess of 1/2 inch in cross section and in a length of 16 feet measured longitudinally shall be corrected by loosening, adding or removing material, reshaping and recompacting by sprinkling and rolling. Sufficient subgrade shall be prepared in advance to insure satisfactory prosecution of the work. Material excavated in the preparation of the subgrade shall be utilized in the construction of adjacent shoulders and slopes or otherwise disposed of as directed, and any additional material required for the completion of the shoulders and slopes shall be secured from sources indicated on plans or designated by the Engineer.

(2) **First Course, Type A, Type B, Type C, Type F and Type G Material.** Immediately before placing the base material, the subgrade shall be checked as to conformity with grade and section.

The material shall be delivered in approved vehicles of a uniform capacity, and it shall be the charge of the Contractor that the required amount of specified material shall be delivered in each 100 foot station. Material deposited upon the subgrade shall be spread and shaped the same day. In the event inclement weather or other unforeseen circumstances render impractical the spreading of the material during the first 24-hour period, the material shall be scarified and spread as directed by the Engineer. The material shall be sprinkled, if directed, and shall then be bladed, dragged and shaped to conform to typical sections as shown on plans. All areas and "nests" of segregated coarse or fine material shall be corrected or removed and replaced with well graded material, as directed by the Engineer. If additional binder is considered desirable or necessary after the material is spread and shaped, it shall be furnished and supplied in the amount directed by the Engineer. Such binder material shall be carefully and evenly incorporated with the material in place by scarifying, harrowing, brooming or by other approved methods.

The course shall be compacted by the method of compaction hereinafter specified as the "Ordinary Compaction" method or the "Density Control" method of compaction as indicated on the plans.

When the plans indicate that the "Ordinary Compaction" method is to be used, the following provisions shall apply:

The course shall be sprinkled as required and rolled as directed until a uniform compaction is secured. Throughout this entire operation, the shape of the course shall be maintained by blading and the surface upon completion shall be smooth and in conformity with the typical sections shown on plans and to the established lines and grades. In that area on which pavement is to be placed, any deviation in excess of 1/4 inch in cross section in a length of 16 feet measured longitudinally shall be corrected by loosening, adding or removing material, reshaping and recompacting by sprinkling and rolling. All irregularities, depressions or weak spots which develop shall be corrected immediately by scarifying the areas affected, adding suitable material as required, reshaping and recompacting by sprinkling and rolling.

When the plans indicate that the "Density Control" method of compaction is to be used, the following provisions shall apply:

The course shall be sprinkled as required and compacted to the extent necessary to provide not less than the percent density as hereinafter specified under "Density". In addition to the requirements specified for density, the full depth of the flexible base shown on the plans shall be compacted to

the extent necessary to remain firm and stable under construction equipment. After each section of flexible base is completed, tests as necessary will be made by the Engineer. If the material fails to meet the density requirements, it shall be reworked as necessary to meet these requirements. Throughout this entire operation, the shape of the course shall be maintained by blading, and the surface upon completion shall be smooth and in conformity with the typical sections shown on the plans and to the established lines and grades. In that area on which pavement is to be placed, any deviation in excess of 1/4 inch in cross section in a length of 16 feet measured longitudinally shall be corrected by loosening, adding or removing material, reshaping and recompacting by sprinkling and rolling. All irregularities, depressions or weak spots which develop shall be corrected immediately by scarifying the areas affected, adding suitable material as required, reshaping and recompacting by sprinkling and rolling.

Should the base course, due to any reason or cause, lose the required stability, density or finish before the surfacing is complete, it shall be recompacted and refinished at the sole expense of the Contractor.

Where Type C material is used, the material shall be scarified, thoroughly wetted, mixed, manipulated, and bladed so as to secure a uniformly wetted material, and pulled in over the subgrade in courses and set under the action of blading and rolling. The work of mixing, blading, rolling, shaping, and subsequent maintenance shall be performed by the continuous use of a sufficient number of satisfactory rollers and power maintainers with adequate scarifier attachments.

(3) **First Course Type D Material.** Immediately before placing the base material, the subgrade shall be checked as to conformity with grade and section, and corrections made if necessary.

All materials shall be delivered in approved vehicles of a uniform capacity. The required amount of shell shall be uniformly spread across the section and allowed to dry sufficiently to insure proper slaking and mixing of the binder material. Immediately upon completion of the drying period, as determined by the Engineer, the specified amount of sand admixture as required to produce a combined material meeting the requirements hereinbefore specified, shall be spread uniformly across the shell. The material shall then be sprinkled as required and thoroughly mixed by blading and harrowing, or other approved methods.

Failure to proceed with the placing of sand admixture or mixing and placing operations will be grounds for the suspension of placing of shell. Under no conditions will the Contractor be allowed to place an excessive amount of shell without proceeding with the mixing and placing operations.

The course shall be compacted by the method of compaction hereinafter specified as the "Ordinary Compaction" method or the "Density Control" method of compaction as indicated on the plans.

When the plans indicate that the "Ordinary Compaction" method is to be used, the following provisions shall apply:

After mixing, all material shall be windrowed, and then spread over the section in layers. The layers shall not exceed 2 inches in loose depth. If necessary to prevent segregation, the material shall be wetted in the windrow prior to spreading. After each lift is spread, it shall be sprinkled and rolled to secure maximum compaction as directed by the Engineer. Succeeding layers shall then be placed similarly until the course is completed. All areas and "nests" of segregated coarse or fine material shall be corrected or removed and replaced with well graded material, as directed by the Engineer. The course shall then be sprinkled as required and rolled as directed until a uniform compaction is secured. Throughout this entire operation, the shape of the course shall be maintained by blading; and the surface, upon completion, shall be smooth and in conformity with the typical sections shown on plans, and to the established lines and grades. In that area on which pavement is to be placed, any deviation in excess of 1/4 inch in cross section in a length of 16 feet measured longitudinally shall be corrected by loosening, adding or removing material, reshaping and recompacting by sprinkling and rolling. All irregularities, depressions or weak spots which develop shall be corrected immediately by scarifying the areas affected, adding suitable material as required, reshaping and recompacting by sprinkling and rolling.

When the plans indicate that the "Density Control" method of compaction is to be used, the compaction method shall be the same as prescribed for Type A, Type B, Type C, Type F and Type G material.

When indicated on the plans or permitted by the Engineer, Type D material may be mixed in a central mixing plant and delivered to the road as a combined mixture. When this method is used, the combined mixture shall meet the requirements for Type D material as hereinbefore specified and the placing and compaction requirement shall be the same as prescribed for Type A, Type B, Type C, Type F and Type G material.

(4) **First Course Type E Material.** The construction methods for placing the first course of Type E material shall be the same as prescribed for Type D material except that after the shell and sand have been placed, the prescribed amount of caliche shall then be spread across the sand and shell. The composite mixture shall then be sprinkled as required and thoroughly mixed by blading and harrowing or other approved methods.

Compaction of the first course of Type E material shall be the same as prescribed above for Type D material.

Failure to proceed with placing the sand and caliche admixture or mixing and placing operations will be grounds for the suspension of placing of

shell. Under no conditions will the Contractor be allowed to place an excessive amount of shell without proceeding with the mixing and placing operations.

(5) **Succeeding Courses.** Construction methods shall be the same as prescribed for the first course. Prior to placing the surfacing on the completed base, the base shall be "dry cured" to the extent directed by the Engineer.

(6) **Density.** When the "Density Control" method of compaction is indicated on the plans, each course of flexible base shall be compacted to the percent density shown on the plans. The testing will be as outlined in Test Method Tex-114-E. It is the intent of this specification to provide in that part of the base included in the top 8 inches immediately below the finished surface of the roadway not less than 100 percent of the density as determined by the compaction ratio method. Field density determination shall be made in accordance with Test Method Tex-115-E.

(7) **Tolerances.** When tolerances are permitted by the plans, the limits establishing reasonably close conformity with percent density specified are defined by the following:

The Engineer may accept the work providing not more than 25 percent of the density tests performed each day are outside the specified density by no more than three pounds per cubic foot and where no two consecutive tests on continuous work are outside the specified limits.

249.7. Measurement. Work and accepted material as prescribed for this item will be measured by the method described as either Class 1, 2, 3 or 4 as follows and as specified on the plans:

When Class 1 measurement is specified, "Flexible Base (Delivered)", "Sand Admixture", "Caliche", and/or "Shell" will be measured by the cubic yard in vehicles as delivered on the road.

When Class 2 measurement is specified, "Flexible Base (Delivered)" will be measured by the ton of 2000 pounds dry weight in vehicles as delivered on the road.

When Class 3 measurement is specified, "Flexible Base (Delivered)" will be measured by the cubic yard in its final position as the volume of base course computed in place between the original subgrade or subbase surfaces, and the lines, grades and slopes of the accepted base course by the method of average end areas. When "Flexible Base (Delivered) (Stockpiled)" is specified it shall be measured in its stockpiled position by the method of average end areas.

When Class 4 measurement is specified, "Flexible Base (Delivered)" will be measured by the square yard of surface area of completed and accepted work based on the width of flexible base as shown on the plans.

The flexible base shall be measured for depth by the Department in units of 2000 square yards, with one measurement taken at a location selected by the Engineer. In that unit where flexible base is deficient by more than 1/2 inch in thickness, the deficiency shall be corrected by scarifying, adding material as required, reshaping and recompacting by sprinkling and rolling.

No additional payment over the contract unit price will be made for any flexible base of a thickness exceeding that required by plans.

Tolerances: The Engineer may accept the work provided no more than 2 out of 10 depth tests performed are deficient by not more than 1/2 inch and where no two consecutive tests on continuous work are outside the specified depth.

Type of Material	Class	Method of Measurement
A, B, C, F and G	1, 2 or 3	As Described Above.
D	1	The shell and sand admixture shall be measured separately as prescribed for Class 1 measurement or
	2	The Combined shell and sand admixture shall be measured as prescribed for Class 2 measurement or
	3	As Described Above.
E	1	The shell, sand admixture and caliche admixture shall be measured separately as prescribed for Class I measurement or
	2	The combined shell, sand admixture and caliche shall be measured as prescribed for Class 2 measurement or
	3	As Described Above.
A, B, C, D, E, F and G	4	As Described Above.

When the plans indicate that measurement of material is to be by the ton, a set of standard platform truck scales conforming to the requirements of the Item, "Weighing and Measuring Equipment", shall be furnished by the Contractor and placed at a location approved by the Engineer, except that when the material is weighed in mixing or batching, platform truck scales and reweighing will not be necessary. The dry weight will be determined by deducting the weight of the moisture in the material at the time of

weighing from the gross weight of the material. The moisture in the material will be determined by Test Method Tex-103-E, at least one time each day and more often if conditions warrant.

The Contractor shall schedule his operations in such manner as to facilitate the measurement of the various pay items.

Material to be stockpiled will be measured in the same manner as that delivered on the road except that it will be measured as delivered to the stockpile site.

249.8. **Payment.** The work performed and material furnished as prescribed by this item and measured in accordance with the applicable provisions of "Measurement" above will be paid for as follows:

Type of Material	Description of Bid Items
A, B, C, F and G	"Flexible Base (Delivered)" of the type (when specified on the plans), grade, class, and compaction method specified.
D	"Flexible Base (Delivered)" of the type (when specified on the plans), grade, class, and compaction method specified. (Cubic yard measurement of combined shell and sand admixture) or "Shell" and "Sand Admixture" of the type, grade, class, and compaction method specified. (Cubic yard measurement with the sand admixture and shell being measured separately) or "Flexible Base (Delivered)" of the type (when specified on the plans), grade, class, and compaction method specified. (Ton measurement of combined shell and sand admixture.)
E	"Flexible Base (Delivered)" of the type (when specified on the plans), grade, class, and compaction method specified. (Cubic yard measurement of combined shell, sand admixture and caliche admixture) or "Shell", "Sand Admixture" and "Caliche Admixture" of the type, grade, class, and compaction method specified. (Cubic yard measurement with sand admixture, caliche admixture and shell being measured separately) or "Flexible Base (Delivered)" of the type (when specified on the plans), grade, class, and compaction method specified. (Ton measurement of combined shell, sand admixture and caliche admixture.)

A, B, C, D, E, F and G	"Flexible Base (Delivered)" of the type (when specified on the plans), grade, class, depth and compaction method specified.

The unit prices bid shall each be full compensation for shaping and fine grading the roadbed; for securing and furnishing all materials, including all royalty and freight involved; for furnishing scales and labor involved in weighing the material when required; for loosening, blasting, excavating, screening, crushing and temporary stockpiling when required; for loading all materials; for all hauling and delivering on the road; for spreading, mixing, blading, dragging, shaping and finishing; and for all manipulation, labor, tools and incidentals necessary to complete the work except as follows:

When the plans include the Item "Flexible Base (Delivered) (Stockpiled)" of the type, class and grade specified, the unit price bid for this material shall be full compensation for preparing the stockpile area; for furnishing all materials; for all royalty and freight involved; for furnishing scales and labor involved in weighing the material when required; for loosening or blasting, excavating, screening and crushing; for temporary stockpiling where required; for loading all materials; for hauling; for spreading and shaping the material in the stockpile; and for all manipulations, labor, tools and incidentals necessary to complete the work except as otherwise provided for in this specification.

When "Ordinary Compaction" is indicated on the plans, all sprinkling and rolling performed as required will be measured and paid for in accordance with the provisions governing the Items of "Sprinkling" and "Rolling" respectively.

When "Density Control" is indicated on the plans, sprinkling and rolling will not be paid for directly, but will be subsidiary to other bid items.

Unless otherwise noted on the plans, all excavation required by this item in the preparation of the subgrade and for the completion of the shoulders and slopes will be measured and paid for in accordance with the provisions governing the Items of "Roadway Excavation" and "Borrow" respectively, with the provision that yardage will be measured and paid for once only, regardless of the manipulations involved. Where shown on plans, the excavation required in the preparation and shaping of the subgrade, for the completion of the shoulders and slopes and for finishing roadway, shall be performed, measured and paid for in accordance with the provisions governing the Items of "Blading", "Road Grader Work" or "Scraper Work", respectively. Payment under the Item "Roadway Excavation" will not be allowed within the limits designated for "Blading", " Road Grader Work" or "Scraper Work".

ITEM 250

SCARIFYING AND RESHAPING BASE COURSE

250.1. Description. "Scarifying and Reshaping Base Course" shall consist of scarifying and reshaping the existing base course (with or without asphalt surfacing) as herein specified and in conformity with the typical sections shown on plans and to the lines and grades established by the Engineer.

250.2. Construction Methods. Prior to scarifying the existing base or base and asphalt surfacing, the shoulders and slopes of the existing roadway shall be excavated or built up, sprinkled and compacted to conform to the typical sections, lines and grades shown on the plans or as directed by the Engineer. The existing base and surface shall then be scarified for its full width and depth unless otherwise shown on the plans and then bladed and shaped to conform to the typical sections shown on the plans. However, in no case shall the underlying subgrade be disturbed. Any bituminous mat encountered shall be broken into particles of not more than three inches in size, and incorporated uniformly with the existing base.

The course shall be compacted by the method of compaction hereinafter specified as the "Ordinary Compaction" method or the "Density Control" method of compaction as indicated on the plans.

When the plans indicate that the "Ordinary Compaction" method is to be used, the following provisions shall apply:

The course shall be sprinkled as required and rolled as directed. All holes, ruts or depressions in the surface shall be repaired by scarifying, reshaping, sprinkling and rolling as directed until a uniform compaction is secured. Throughout this entire operation, the shape of the course shall be maintained by blading, and the surface upon completion shall be smooth and in conformity with the typical cross sections shown on plans and to the established lines and grades. In that area on which pavement is to be placed, any deviation in excess of 1/4 inch in cross section and in a length of 16 feet measured longitudinally shall be corrected by loosening, adding or removing material, reshaping and recompacting by sprinkling and rolling. All irregularities, depressions or weak spots which develop shall be corrected immediately by scarifying the areas affected, adding suitable material as required, reshaping and recompacting by sprinkling and rolling.

The Contractor shall at all times provide proper and sufficient equipment and conduct his operations in a satisfactory and workmanlike manner. Failure to manipulate materials promptly and perform the various operations required in a continuous and coordinated manner will be grounds for suspension of any part of the work.

When the plans indicate that the "Density Control" method of compaction is to be used, the following provisions shall apply:

The course shall be sprinkled as required and compacted to the extent necessary to provide not less than the percent density as hereinafter specified under "Density". In addition to the requirements specified for density, the full depth of the scarified and reshaped base course shall be compacted to the extent necessary to remain firm and stable under construction equipment. After each section of base is completed, tests as necessary will be made by the Engineer. If the material fails to meet the density requirements, it shall be reworked as necessary to meet these requirements. Throughout this entire operation, the shape of the course shall be maintained by blading, and the surface upon completion shall be smooth and in conformity with the typical cross sections shown on plans and to the established lines and grades. In that area on which pavement is to be placed, any deviation in excess of 1/4 inch in cross section and in a length of 16 feet measured longitudinally shall be corrected by loosening, adding or removing material, reshaping and recompacting by sprinkling and rolling. All irregularities, depressions or weak spots which develop shall be corrected immediately by scarifying the areas affected, adding suitable material as required, reshaping and recompacting by sprinkling and rolling. The Contractor shall at all times provide proper and sufficient equipment and conduct his operations in a satisfactory and workmanlike manner. Should the base course, due to any reason or cause, lose the required stability, density and finish before it is accepted, it shall be recompacted and refinished at the sole expense of the Contractor.

250.3. Density. When the "Density Control" method of compaction is indicated on the plans, each course of base shall be compacted to the percent density shown on the plans. The testing will be as outlined in Test Method Tex-114-E. It is the intent of this specification to provide in that part of the base included in the top 8 inches immediately below the finished surface of the roadway, not less than 100 percent of the density as determined by the compaction ratio method. Field density determination shall be made in accordance with Test Method Tex-115-E.

When tolerances are permitted by the plans, the limits establishing reasonably close conformity with percent density specified are defined by the following:

The Engineer may accept the work providing not more than 25 percent of the density tests performed each day are outside the specified density by no more than three pounds per cubic foot and where no two consecutive tests on continuous work are outside the specified limits.

250.4. Measurement. Scarifying and reshaping base course, including any asphalt surfacing, as provided herein shall be measured along the centerline of each individual roadway by the 100-foot station, or by the square yard.

250.5. **Payment.** The work performed as prescribed by this item and measured as provided under "Measurement" will be paid for at the unit price bid, by one of the following methods: (1) "Scarifying and Reshaping Base Course (Ordinary Compaction)" of the depth specified or (2) "Scarifying and Reshaping Base Course (Density Control)" of the depth specified.

The unit prices bid for scarifying and reshaping base course shall each be full compensation for cleaning and scarifying the existing base and surface; for all spreading, blading, dragging, shaping and finishing of the scarified material; and for all manipulations, labor, tools and incidentals necessary to complete the work except as follows:

When "Ordinary Compaction" is indicated on the plans, all sprinkling and rolling, performed as required, will be measured and paid for in accordance with the provisions governing the Items of "Sprinkling" and "Rolling", respectively.

When "Density Control" is indicated on the plans, sprinkling and rolling will not be paid for directly, but the cost of all sprinkling and rolling shall be subsidiary to other bid items.

Excavation required in the preparation of shoulders and slopes to conform with the typical sections shown on the plans will be paid for in accordance with the provisions of the items covering this phase of work as indicated on the plans, with the provision that work will be paid for once only, regardless of the manipulations involved.

ITEM 252

SALVAGING AND REPLACING BASE

252.1. **Description.** "Salvaging and Replacing Base" shall consist of removing the existing base material where shown on plans, such temporary storage as is necessary, and the replacement of this material on the prepared roadbed as herein specified and in conformity with the typical sections shown on plans and to the lines and grades as established by the Engineer.

252.2. **Construction Methods.**

(1) **Salvaging Existing Base.** The existing base, including any bituminous mat not shown on plans to be salvaged, shall first be cleaned of all dirt or other objectionable material by blading, brooming or other approved methods, then scarified to the width and depth as may be required to provide the estimated amount of salvaged material per station as shown on the plans; however, in no case shall the underlying subgrade be disturbed. Any bituminous mat encountered shall be broken into particles not more than three inches in size, and incorporated uniformly with the existing base.

The material thus salvaged shall be placed in stockpiles or windrows until sufficient subgrade has been prepared to receive the salvaged material; then, if the Contractor so elects, the remaining old base material as salvaged may be placed directly upon the prepared subgrade as directed by the Engineer, thus eliminating the necessity of stockpiling. It shall be the responsibility of the Contractor that all the available material shall be salvaged and replaced and shall be kept reasonably free of soil from the subgrade or roadbed during the salvaging and replacing operations. When material is windrowed or stockpiled, it shall be so placed as not to interfere with traffic, proper drainage or the general progress of the work.

(2) **Preparation of Subgrade.** When the salvaged material is to be replaced directly upon the subgrade, the roadbed shall be excavated and shaped in conformity with the typical sections shown on plans and to the lines and grades as established by the Engineer. All unstable or otherwise objectionable material shall be removed from the subgrade and replaced with approved material. All holes, ruts and depressions shall be filled with approved material and, if required, the subgrade shall be thoroughly wetted with water, reshaped, and rolled to the extent directed in order to place the subgrade in an acceptable condition to receive the salvaged base material. The surface of the subgrade shall be finished to line and grade as established and in conformity with the typical section shown on plans, and any deviation in excess of 1/2 inch in cross section and in a length of 16 feet measured longitudinally shall be corrected by loosening, adding or removing material, reshaping and recompacting by sprinkling and rolling. Sufficient subgrade shall be prepared in advance to insure satisfactory prosecution of the work. Material excavated in the preparation of the subgrade shall be utilized in the construction of adjacent shoulders and slopes or otherwise disposed of as directed. Any additional material required for the completion of the shoulders and slopes shall be secured from sources indicated on plans or designated by the Engineer.

(3) **Replacement of Salvaged Material.** The material shall then be deposited on the subgrade or other base course, sprinkled if directed, and bladed, dragged and shaped to conform to typical sections shown on plans. All areas and "nests" of segregated coarse or fine material shall be corrected or removed and replaced with satisfactory salvaged material as directed by the Engineer.

The course shall be compacted by the method of compaction hereinafter specified as the "Ordinary Compaction" method or the "Density Control" method of compaction as indicated on the plans.

When the plans indicate that the "Ordinary Compaction" method is to be used, the following provisions shall apply:

The course shall be sprinkled as required and rolled as directed until a uniform compaction is secured. Throughout this entire operation, the shape

of the course shall be maintained by blading, and the surface upon completion shall be smooth and in conformity with the typical sections shown on plans and to the established lines and grades. In that area on which pavement is to be placed, any deviation in excess of 1/4 inch in cross section and in a length of 16 feet measured longitudinally shall be corrected by loosening, adding or removing material, reshaping and recompacting by sprinkling and rolling. All irregularities, depressions or weak spots which develop shall be corrected immediately by scarifying the areas affected, adding suitable material as required, reshaping and recompacting by sprinkling and rolling.

When the plans indicate that the "Density Control" method of compaction is to be used, the following provisions shall apply:

The course shall be sprinkled as required and compacted to the extent necessary to provide not less than the percent density as hereinafter specified under "Density". The testing will be as outlined in Test Method Tex-114-E. In addition to the requirements specified for density, the depth of the salvaged material shown on the plans shall be compacted to the extent necessary to remain firm and stable under construction equipment. After each section of salvaged base is completed, tests as necessary will be made by the Engineer. If the material fails to meet the density requirements, it shall be reworked as necessary to meet these requirements. Throughout this entire operation the shape of the course shall be maintained by blading, and the surface upon completion shall be smooth and in conformity with the typical sections shown on the plans and to the established lines and grades. In that area on which pavement is to be placed, any deviation in excess of 1/4 inch in cross section and in a length of 16 feet measured longitudinally shall be corrected by loosening, adding or removing material, reshaping and recompacting by sprinkling and rolling. All irregularities, depressions or weak spots which develop shall be corrected immediately by scarifying the area affected, adding suitable material as required, reshaping and recompacting by sprinkling and compaction methods. Should the base course, due to any reason or cause, lose the required stability, density and finish before the surfacing is complete, it shall be recompacted and refinished at the sole expense of the Contractor.

252.3. **Density.** When the "Density Control" method of compaction is indicated on the plans each course of base shall be compacted to the percent density shown on the plans. The testing will be as outlined in Test Method Tex-114-E. It is the intent of this specification to provide in that part of the base included in the top 8 inches immediately below the finished surface of the roadway, not less than 100 percent of the density as determined by the compaction ratio method. Field density determination shall be made in accordance with Test Method Tex-115-E.

Tolerances: The limits establishing reasonably close conformity with percent density specified are defined by the following:

The Engineer may accept the work, providing not more than 25% of the density tests performed each day are outside the specified density by no more than 3 pounds per cubic foot and where no two consecutive tests on continuous work are outside the specified limits.

252.4. **Measurement.** Work as prescribed for this item, will be measured by the 100-foot station along the centerline of each individual roadway, or by the square yard of base in its original position, by the cubic yard of material in vehicles as delivered on the road or by the ton of 2000 pounds dry weight of material in vehicles as delivered on the road. Weighing will be in accordance with the requirements of the Item, "Weighing and Measuring Equipment". The dry weight will be determined by deducting the weight of the moisture in the material at the time of weighing from the gross weight of the material. The moisture in the material will be determined by Test Method Tex-103-E at least one time each day and more often if conditions warrant.

252.5. **Payment.** The work performed as prescribed by this item and measured in accordance with "Measurement" above, will be paid for at the unit price bid by one of the following methods: (1) "Salvaging and Replacing Base (Ordinary Compaction)" of the width and depth specified or (2) "Salvaging and Replacing Base (Density Control)" of the width and depth specified.

The unit prices bid for salvaging and replacing base shall each be full compensation for shaping and fine grading the roadbed; for cleaning and scarifying, removing, windrowing or stockpiling all salvaged material; for all hauling; for replacing the salvaged material on the prepared subgrade; for spreading, blading, dragging, shaping and finishing; and for all manipulations, labor, tools, equipment and incidentals necessary to complete the work except as follows:

When "Ordinary Compaction" is indicated on the plans, all sprinkling and rolling performed as required will be measured and paid for in accordance with the provisions governing the Items of "Sprinkling" and "Rolling" respectively.

When "Density Control" is indicated on the plans, sprinkling and rolling will not be paid for directly but the cost of all sprinkling and rolling will be subsidiary to other bid items.

Unless otherwise indicated on the plans, all excavation required by this item in the preparation of the subgrade and for the completion of the shoulders and slopes will be measured and paid for in accordance with the provisions governing the Items of "Roadway Excavation" and "Borrow" respectively with the provision that yardage will be measured and paid for once

only, regardless of the manipulation involved. Where shown on plans, the excavation required in the preparation and shaping of the subgrade, for the completion of the shoulders and slopes and for finishing roadway, shall be performed, measured and paid for, in accordance with the provisions governing the Items of "Blading", "Road Grader Work" or "Scraper Work", respectively. Payment under the Item, "Roadway Excavation" will not be allowed within the limits designated for "Blading", "Road Grader Work" or "Scraper Work".

ITEM 254

SCARIFYING EXISTING PAVEMENT

254.1. **Description.** This item consists of scarifying existing asphalt surfacing and flexible base course material to the lines and grades as shown on the plans or established by the Engineer.

254.2. **Construction Methods.** The existing asphalt surfacing and flexible base course material at points shown on the plans or designated by the Engineer shall be scarified to the depth and width shown by the lines and grades on the plans or established by the Engineer. The existing material to be removed shall be scarified until it is broken into particles small enough to be easily removed.

254.3. **Measurement.** This item will be measured by the 100-foot station regardless of the width of the old base and pavement or, when provided by the plans, measurement will be made by the square yard of the old pavement in its original position.

254.4. **Payment.** The work performed as prescribed for this item, measured as provided under "Measurement" will be paid for at the unit price bid for "Scarifying Existing Pavement", which price shall be full compensation for furnishing all labor, tools, equipment, supplies and incidentals necessary to satisfactorily complete the work.

Excavating, hauling and disposing of the scarified material will be measured and paid for in accordance with the provisions governing the Items of "Roadway Excavation" and "Overhaul".

ITEM 256

SALVAGING AND STOCKPILING BASE MATERIAL

256.1. **Description.** This item shall consist of salvaging base material from places shown on the plans or as directed by the Engineer and of stockpiling that material where shown on the plans or directed by the Engineer.

256.2. Construction Methods. Trash, wood, brush, stumps and other objectionable materials at the storage site shall be removed and disposed of as directed by the Engineer prior to the beginning of work required by this item. The base material, including any asphalt mat, which may not be shown on the plans, shall be cleaned of all dirt or other objectionable material. It shall be scarified, if necessary. Material to be salvaged shall be worked into stockpiles or windrows and loaded by approved equipment into approved equipment for hauling to the stockpile site. It shall be the responsibility of the Contractor that all the available material shall be salvaged and kept reasonably free of soil from subgrade or roadbed during the salvaging operations. The operation shall be conducted in such manner as not to interfere with traffic, drainage or the general requirements of the work. After the material is deposited in the stockpile area, it shall be worked into a neat compact stockpile.

256.3. Measurement. Work as prescribed for this item will be measured by the cubic yard of material in vehicles as delivered at the stockpile; or when indicated on plans, by the cubic yard of material measured by the average-end-area method in the stockpile; or when indicated on the plans, by the cubic yard in its original position measured by the average-end-area method; or by the station in original position; or by the ton of 2,000 pounds dry weight as delivered at the stockpile. Determination of moisture content for ton measurement will be as directed by the Engineer.

When specified on the plans measurement for hauling material into each quarter mile beyond the first quarter mile will be based on the shortest practical haul route between the center of mass of the designated salvaging areas and point of stockpile.

When the plans indicate that measurement of the material is to be by the ton, a set of standard platform truck scales conforming to the requirements of the Item, "Weighing and Measuring Equipment", shall be furnished by the Contractor and placed at a location approved by the Engineer, except that when the material is weighed in mixing or batching, platform truck scales and reweighing will not be necessary. The dry weight will be determined by deducting the weight of the moisture in the material at the time of weighing from the gross weight of the material. The moisture in the material will be determined by Test Method Tex-103-E, at least one time each day and more often if conditions warrant.

256.4. Payment. The work performed as prescribed by this item and measured as provided under "Measurement" will be paid for at the unit price bid for "Salvaging and Stockpiling Base", which price shall be full compensation for scarifying, removing, windrowing, or stockpiling; for preparing the stockpile area; for all hauling of salvaged material, except when payment for hauling is specified on the plans; for spreading, blading, shaping and finishing this stockpile; and for all manipulations, labor, tools, equipment and incidentals necessary to complete the work.

When specified on the plans hauling salvaged-base material into each quarter mile beyond the first quarter mile will be paid for at the unit price bid for "Additional Quarter Mile Haul (Salvaged Base)".

ITEM 260

LIME TREATMENT FOR MATERIALS IN PLACE

260.1. Description. This item shall consist of treating the subgrade, existing subbase or existing base by the pulverizing, addition of lime, mixing and compacting the mixed material to the required density. This item applies to natural ground, embankment, or existing pavement structure and shall be constructed as specified herein and in conformity with the typical sections, lines and grades as shown on the plans or as established by the Engineer.

260.2. Materials.

(1) The lime shall meet the requirements of the Item, "Hydrated Lime and Lime Slurry", for the type of lime specified.

When Type B, Commercial Lime Slurry, is specified, the Contractor shall select, prior to construction, the class to be used and shall notify the Engineer in writing before changing from one class to another.

(2) If the minimum design strength or percent of lime to be used for the treated subgrade, existing subbase or existing base is specified, it will be determined by preliminary tests performed in accordance with Test Method Tex-121-E.

260.3. Equipment.

(1) The machinery, tools and equipment necessary for proper prosecution of the work shall be on the project and approved by the Engineer prior to the beginning of construction operations.

All machinery, tools and equipment used shall be maintained in a satisfactory and workmanlike manner.

(2) Hydrated lime shall be stored and handled in closed weatherproof containers until immediately before distribution on the road. If storage bins are used they shall be completely enclosed. Hydrated lime in bags shall be stored in weatherproof buildings with adequate protection from ground dampness.

(3) If lime is furnished in trucks, each truck shall have the weight of lime certified on public scales or the Contractor shall place a set of standard platform truck scales or hopper scales at a location approved by the Engineer.

Scales shall conform to the requirements of the Item, "Weighing and Measuring Equipment".

(4) If lime is furnished in bags, each bag shall bear the manufacturer's certified weight. Bags varying more than 5 percent from that weight may be rejected and the average weight of bags in any shipment, as shown by weighing 50 bags taken at random, shall not be less than the manufacturer's certified weight.

260.4. Construction Methods.

(1) **General.** It is the primary requirement of this specification to secure a completed course of treated material containing a uniform lime mixture, free from loose or segregated areas, of uniform density and moisture content, well bound for its full depth and with a smooth surface suitable for placing subsequent courses. It shall be the responsibility of the Contractor to regulate the sequence of his work, to use the proper amount of lime, maintain the work and rework the courses as necessary to meet the above requirements.

The roadbed shall be constructed and shaped to conform to the typical sections, lines and grades as shown on the plans or as established by the Engineer. The material, either before or after lime is added, shall be excavated to the secondary grade (proposed bottom of lime treatment) and removed or windrowed to expose the secondary grade. Any wet or unstable materials below the secondary grade shall be corrected, as directed by the Engineer, by scarifying, adding lime, and compacting, or other methods until satisfactory stability is obtained.

If the Contractor elects to use a cutting and pulverizing machine that will remove the subgrade material accurately to the secondary grade and pulverize the material at the same time, he will not be required to expose the secondary grade nor windrow the material. However, the Contractor shall be required to roll the subgrade, as directed by the Engineer, before using the pulverizing machine and correct any soft areas that this rolling may reveal. This method will be permitted only where a machine is provided which will insure that the material is cut uniformly to the proper depth and which has cutters that will plane the secondary grade to a smooth surface over the entire width of the cut. The machine shall be of such design that a visible indication is given at all times that the machine is cutting to the proper depth.

(2) **Application.** Lime shall be spread only on that area where the first mixing operations can be completed during the same working day.

The application and mixing of lime with the material shall be accomplished by the methods hereinafter described as "Dry Placing" or "Slurry Placing". When Type A, Hydrated Lime, is specified, the Contractor may use either method, unless otherwise noted on the plans.

(a) **Dry Placing.** The lime shall be spread by an approved spreader or by bag distribution at the rates shown on the plans or as directed by the Engineer.

The lime shall be distributed at a uniform rate and in such manner as to reduce the scattering of lime by wind to a minimum. Lime shall not be applied when wind conditions, in the opinion of the Engineer, are such that blowing lime becomes objectionable to traffic or adjacent property owners. A motor grader shall not be used to spread the lime.

The material shall be sprinkled as directed by the Engineer, until the proper moisture content has been secured.

(b) **Slurry Placing.** Where Type A, Hydrated Lime, is specified and slurry placement is to be used, the Type A Hydrate shall be mixed with water to form a slurry of the solids content designated by the Engineer.

Where Type B, Commercial Lime Slurry is to be used, it shall be of the minimum solids and purity for the applicable grade being used. The distribution of lime at the rates shown on the plans or as directed by the Engineer shall be attained by successive passes over a measured section of roadway until the proper moisture and lime content has been secured.

The distributor truck shall be equipped with an agitator which will keep the lime and water in a uniform mixture.

(3) **Mixing.** The mixing procedure shall be the same for "Dry Placing" or "Slurry Placing" as herein described.

The material and lime shall be thoroughly mixed by approved road mixers or other approved equipment, and the mixing continued until, in the opinion of the Engineer, a homogeneous friable mixture of material and lime is obtained, such that when all nonslaking aggregates retained on the 3/4" sieve are removed, the remainder of the material shall meet the following requirements when tested from the roadway in the roadway condition by laboratory sieves:

	Percent
Minimum passing 1-3/4" sieve	100
Minimum passing 3/4" sieve	85

The soil-lime mixture shall be sprinkled during the mixing operation as directed by the Engineer to provide optimum moisture in the mixing.

During the interval of time between application and mixing, hydrated lime that has been exposed to the open air for a period of 6 hours or more or has had excessive loss due to washing or blowing will not be accepted for payment.

(4) **Compaction.** Compaction of the mixture shall begin immediately after final mixing unless approval is obtained from the Engineer. The mate-

rial shall be aerated or sprinkled as necessary to provide the optimum moisture. Compaction shall begin at the bottom and shall continue until the entire depth of mixture is uniformly compacted by the method of compaction hereinafter specified as the "Ordinary Compaction" method or the "Density Control" method as indicated on the plans.

If the total thickness of the material to be treated cannot be mixed in one operation, the previously mixed material shall be bladed to a windrow just beyond the area to be treated and the next layer mixed with lime as specified in Section (3). The first layer of the treated material shall be compacted in such a manner that the treated material will not be mixed with the underlying material.

When the "Ordinary Compaction" method is indicated on the plans the following provisions shall apply:

The material shall be sprinkled and rolled as directed by the Engineer. All irregularities, depressions or weak spots which develop shall be corrected immediately by scarifying the areas affected, adding or removing material as required and reshaping and recompacting by sprinkling and rolling. The surface of the course shall be maintained in a smooth condition, free from undulations and ruts, until other work is placed thereon or the work is accepted.

When the "Density Control" method of compaction is indicated on the plans the following provisions shall apply:

The course shall be sprinkled as required and compacted to the extent necessary to provide the density specified below as determined by the use of the compaction ratio method:

Description	Density, Percent
For lime treated subgrade, existing subbase or existing base that will receive subsequent subbase or base courses.	Not less than 95 except when otherwise shown on the plans.
For lime treated existing subgrade or existing base that will receive surface courses.	Not less than 98 except when otherwise shown on the plans.

The testing will be as outlined in Test Method Tex-114-E or other approved methods. In addition to the requirements specified for density, the full depth of the material shown on the plans shall be compacted to the extent necessary to remain firm and stable under construction equipment. After each section is completed, tests as necessary will be made by the Engineer. If the material fails to meet the density requirements, it shall be reworked as necessary to meet these requirements. Throughout this entire

operation the shape of the course shall be maintained by blading, and the surface upon completion shall be smooth and in conformity with the typical section shown on the plans and to the established lines and grades. Should the material, due to any reason or cause, lose the required stability, density and finish before the next course is placed or the work is accepted, it shall be reprocessed and refinished at the expense of the Contractor.

260.5. Finishing, Curing and Preparation for Surfacing. After the final layer or course of the lime treated subgrade, subbase or base has been compacted, it shall be brought to the required lines and grades in accordance with the typical sections. The completed section shall then be finished by rolling as directed with a pneumatic tire or other suitable roller sufficiently light to prevent hair cracking. The completed section shall be moist-cured for a minimum of 7 days before further courses are added or any traffic is permitted, unless otherwise directed by the Engineer. In cases where subgrade treatment or subbase sets up sufficiently to prevent objectionable damage from traffic, such layers may be opened to construction and/or access traffic, and covered by other courses, the day following compaction, unless otherwise directed by the Engineer. If the plans provide for the treated material to be sealed or covered by other courses of material, such seal or course shall be applied within 14 days after final mixing is completed, unless otherwise directed by the Engineer.

260.6. Measurement. Lime treatment of the subgrade, existing subbase, and existing base shall be measured by the square yard to the lines shown on the typical sections.

When Type A, Hydrated Lime is used, the quantity of lime will be measured by the ton of 2,000 pounds, dry weight.

When Type B, Commercial Lime Slurry is used, the quantity of lime shall be calculated from the required minimum percent solids based upon the use of Grade 1, Grade 2, or Grade 3 as follows:

Grade 1: The "Dry Solids Content" shall be at least 31 percent by weight of the slurry and the quantity of lime will be calculated by the ton of 2000 pounds based on the 31 percent, as delivered on the road.

Grade 2: The "Dry Solids Content" shall be at least 35 percent by weight of the slurry and the quantity of lime will be calculated by the ton of 2000 pounds based on the 35 percent, as delivered on the road.

Grade 3: The "Dry Solids Content" shall be at least 46 percent by weight of the slurry and the quantity of lime will be calculated by the ton of 2000 pounds based on the 46 percent, as delivered on the road.

260.7. Payment. Work performed and materials furnished as prescribed by this item and measured as provided under "Measurement" will be paid for as follows:

Lime will be paid for at the unit price bid per ton of 2,000 pounds for "Lime" of the type specified which price shall be full compensation for furnishing all lime.

"Lime Treated Subgrade (Ordinary Compaction)", "Lime Treated Existing Subbase (Ordinary Compaction)" and "Lime Treated Existing Base (Ordinary Compaction)" or "Lime Treated Subgrade (Density Control)", "Lime Treated Existing Subbase (Density Control)" and "Lime Treated Existing Base (Density Control)" of the depth specified will be paid for at the unit price bid per square yard. The unit price bid shall be full compensation for all correction of secondary subgrade, for loosening, mixing, pulverizing, spreading, drying, application of lime, water content of the slurry, shaping and maintaining, for all manipulations required, for all hauling and freight involved, for all tools, equipment, labor, and for all incidentals necessary to complete the work except as specified below:

When "Ordinary Compaction" is indicated on the plans, all sprinkling and rolling performed as required will be measured and paid for in accordance with the provisions governing the Items of "Sprinkling" and "Rolling" respectively.

When "Density Control" is indicated on the plans, sprinkling and rolling will not be paid for directly but the cost of all sprinkling and rolling will be subsidiary to other bid items.

ITEM 262

LIME TREATMENT FOR BASE COURSES

262.1. Description. This item shall consist of treating base and subbase by addition of lime, mixing and compacting the mixed material in accordance with the specifications governing the base and subbase courses. This item applies to the treatment of base or subbase courses placed under this contract and shall be constructed as herein specified and in conformity with the items governing the base or subbase courses.

262.2. Materials.

(1) Base and subbase materials shall meet the requirements shown on the plans or in the pertinent specifications.

(2) The lime shall meet the requirements of the Item, "Hydrated Lime and Lime Slurry" for the type of lime specified.

When Type B, Commercial Lime Slurry, is specified, the Contractor shall select, prior to construction, the grade to be used and shall notify the Engineer in writing before changing from one grade to another.

(3) If the minimum design strength or percent lime to be used for the treated base or subbase is specified, it will be determined by preliminary tests performed in accordance with Test Method Tex-121-E.

262.3. Equipment.

(1) The machinery, tools and equipment necessary for proper prosecution of the work shall be on the project and approved by the Engineer prior to the beginning of construction operations. All machinery, tools and equipment used shall be maintained in a satisfactory working condition. The Contractor shall employ adequate methods in performing the work and shall conduct his operations in a satisfactory and workmanlike manner.

(2) Hydrated lime shall be stored and handled in closed, weatherproof containers until immediately before distribution on the road. If storage bins are used, they shall be completely enclosed. Hydrated lime in bags shall be stored in weatherproof buildings with adequate protection from ground dampness.

(3) If lime is furnished in trucks, each truck shall have the weight of lime certified on public scales or the Contractor shall place a set of standard platform truck scales at a location approved by the Engineer. Scales shall meet the requirements of the Item, "Weighing and Measuring Equipment".

(4) If lime is furnished in bags, each bag shall bear the manufacturer's certified weight. Bags varying more than 5 percent from that weight may be rejected and the average weight of bags in any shipment, as shown by weighing 50 bags taken at random, shall not be less than the manufacturer's certified weight.

262.4. Construction Methods.

(1) **General.** It is the primary requirement of this specification to secure a completed course of treated base or subbase material containing a uniform lime mixture, free from loose or segregated areas, of uniform density and moisture, well bound for its full depth and with a smooth surface suitable for placing additional subbase, base or surface courses. It shall be the responsibility of the Contractor to regulate the sequence of his work, to use the proper amount of lime, maintain the work and rework the courses as necessary to meet the above requirements.

Prior to placing base or subbase material, the subgrade shall be shaped to conform to the typical sections, lines and grades as shown on the plans or as established by the Engineer.

The base or subbase material, as provided in the governing specification, shall be delivered, placed and spread in the required amount per station. The material shall be manipulated as specified for the base or subbase course or as directed by the Engineer and thoroughly mixed prior to the addition of the lime.

(2) **Application.** Lime shall be spread only on that area where the mixing operations can be completed during the same working day.

The application and mixing of lime with the material shall be accomplished by the methods hereinafter described as "Dry Placing" or "Slurry Placing". When Type A, Hydrated Lime is specified, the Contractor may use either method, unless otherwise noted on the plans.

(a) Dry Placing. The lime shall be spread by an approved spreader or by bag distribution at the rates shown on the plans or as directed by the Engineer.

The lime shall be distributed at a uniform rate and in such a manner as to reduce the scattering of lime by wind to a minimum. Lime shall not be applied when wind conditions, in the opinion of the Engineer, are such that blowing lime becomes objectionable to traffic and adjacent property owners. A motor grader shall not be used to spread the lime.

The material shall be sprinkled as directed by the Engineer, until the proper moisture content has been secured.

(b) Slurry Placing. Where Type A, Hydrated Lime is specified and slurry placement is to be used, the Type A Hydrate shall be mixed with water to form a slurry of the solids content designated by the Engineer.

Type B, Commercial Lime Slurry shall be applied with a lime percentage not less than that applicable for the grade used. The distribution of lime at the rates shown on the plans or as directed by the Engineer, shall be attained by successive passes over a measured section of roadway until the proper moisture and lime content have been secured.

The distributor truck shall be equipped with an agitator which will keep the lime and water in a consistent mixture.

(3) Mixing. The base or subbase material, lime and required water shall be thoroughly mixed and blended by approved road mixers or other approved equipment, and the mixing continued until, in the opinion of the Engineer, a homogeneous, friable mixture is obtained. When lime is placed as a slurry and mixed by the use of blades, the material shall be bladed as the lime-water mixture is applied, and after the total amount has been placed the mixture shall be thoroughly blended to the satisfaction of the Engineer.

During the interval of time between application and mixing, hydrated lime that has been exposed to the open air for a period of 6 hours or more or to excessive loss due to washing or blowing will not be accepted for payment.

(4) Compaction. Compaction of the mixture shall begin immediately after mixing unless approval is obtained from the Engineer. The material shall be aerated or sprinkled as necessary to provide the optimum moisture. Compaction shall begin at the bottom and shall continue until the entire depth of mixture is uniformly compacted to the density required by the plans or by the methods provided in the governing specifications.

If the total thickness of the material to be treated cannot be mixed in one operation, the previously mixed material shall be bladed to a windrow just beyond the area to be treated and the next layer mixed with lime as specified in Section (3). The first layer of the treated material shall be compacted in such a manner that the treated material will not be mixed with the underlying material.

When the "Ordinary Compaction" method for base and subbase materials is indicated on the plans the following provisions shall apply:

The material shall be sprinkled and rolled as directed by the Engineer. All irregularities, depressions or weak spots which develop shall be corrected immediately by scarifying the areas affected, adding or removing material as required, reshaping and recompacting by sprinkling and rolling. The surface of the course shall be maintained in a smooth condition, free from undulations and ruts, until other work is placed thereon, or the work is accepted.

When the "Density Control" method of compaction for base and subbase materials is indicated on the plans the following provisions shall apply:

The bottom course shall be sprinkled as required and compacted to the extent necessary to provide not less than 95 percent of the density as determined by the use of the compaction ratio method or to the density shown on the plans. All other subsequent courses treated under this item shall be compacted to a minimum of 98 percent of compaction ratio density.

The testing will be outlined in Test Method Tex-114-E or other approved methods. In addition to the requirements specified for density, the full depth of the material shown on the plans shall be compacted to the extent necessary to remain firm and stable under construction equipment. After each section is completed, tests as necessary will be made by the Engineer. If the material fails to meet the density requirements, it shall be reworked as necessary to meet these requirements. Throughout this entire operation the shape of the course shall be maintained by blading, and the surface upon completion shall be smooth and in conformity with the typical section shown on the plans and to the established lines and grades. Should the material, due to any reason or cause, lose the required stability, density and finish before the next course is placed or the work is accepted, it shall be reprocessed and refinished at the expense of the Contractor.

262.5. **Finishing, Curing and Preparation for Surfacing.** After the final layer or course of the subbase or base has been compacted, it shall be brought to the required lines and grades in accordance with the typical sections. The completed section shall then be finished and rolled as directed with a pneumatic tire or other suitable roller sufficiently light to prevent hair cracking. The completed section shall be moist-cured for a minimum of

7 days before further courses are added or any traffic is permitted unless otherwise directed by the Engineer. In cases where subbase sets up sufficiently to prevent objectionable damage from traffic, such layers may be opened to construction and/or access traffic, and covered by other courses, the day following compaction, unless otherwise directed by the Engineer. If the plans provide for the treated material to be sealed or covered by other courses of material such seal or course shall be applied within 14 days after compaction unless otherwise directed by the Engineer.

262.6. **Alternate Construction Methods.** With written approval of the Engineer, the Contractor will be permitted to utilize alternate construction methods, such as a central mixing plant, provided such methods result in producing a satisfactorily treated material meeting the specifications herein described.

262.7. **Measurement.** When lime is added to the base and subbase materials provided under pertinent specifications, the specification applicable to that item shall govern except that manipulation of the materials and application, mixing, measurement and payment for lime shall be as required herein.

When Type A, Hydrated Lime is used, the quantity of lime will be measured by the ton of 2,000 pounds, dry weight.

When Type B, Commercial Lime Slurry is used, the quantity of lime shall be calculated from the required minimum percent solids based upon the use of Grade 1, Grade 2, or Grade 3 as follows:

Grade 1: The "Dry Solids Content" shall be at least 31 percent by weight of the slurry and the quantity of lime will be calculated by the ton of 2,000 pounds based on the 31 percent, as delivered on the road.

Grade 2: The "Dry Solids Content" shall be at least 35 percent by weight of the slurry and the quantity of lime will be calculated by the ton of 2,000 pounds based on the 35 percent, as delivered on the road.

Grade 3: The "Dry Solids Content" shall be at least 46 percent by weight of the slurry and the quantity of lime will be calculated by the ton of 2,000 pounds based on the 46 percent, as delivered on the road.

262.8. **Payment.** Work performed and materials furnished as prescribed by this specification and measured as provided under "Measurement" will be paid for at the unit price bid per ton for "Lime", of the type specified, which price shall be full compensation for supplying the lime, for all mixing, spreading, drying, application of the lime, water content of the slurry, mixing water, shaping and maintaining, for all manipulations required, for all hauling and freight involved, for all tools, equipment, labor and for all incidentals necessary to satisfactorily complete the work, except as hereinafter specified.

Payment for the preparation of the subgrade will be measured and paid for in accordance with the pertinent excavation items.

Measurement and payment for all other items involved in constructing base or subbase courses, including sprinkling and rolling, will be as provided in the governing base or subbase item.

ITEM 264

HYDRATED LIME AND LIME SLURRY

264.1. **Description.** This item establishes the requirements for hydrated lime and commercial lime slurry of the type and grade considered suitable for use in the treatment of natural or processed materials or mixtures for subgrade, subbase and base construction.

264.2. **Types.** The various types and grades are defined and identified as follows:

(1) **Type A, Hydrated Lime,** shall consist of a dry powder obtained by treating quicklime with enough water to satisfy its chemical affinity for water under the conditions of its hydration. This material is to consist essentially of calcium hydroxide or a mixture of calcium hydroxide and a small allowable percentage of calcium oxide, magnesium oxide and magnesium hydroxide.

The hydrated lime shall comply with the following chemical and physical requirements:

(a) **Chemical Composition:**

Total "active" lime content, percent by weight . . . . . Min. 90.0%
(i.e., % by wt. $(Ca(OH)_2$ + % by wt. CaO)*

*Note: No more than 5% by weight calcium oxide (unhydrated lime) will be allowed in determining the total "active" lime content.

Unhydrated lime content, percent by weight CaO . . . . . Max. 5.0%
"Free Water" content, percent by weight H_2O . . . . . Max. 4.0%

(b) **Residue (Wet Sieve).** The percent by weight of residue retained shall conform to the following requirements:

Residue retained on a No. 6 (3360 micron) sieve . . . . . Max. 0.1%
Residue retained on a No. 30 (590 micron) sieve . . . . . Max. 3.0%

Hydrated lime for stabilization purposes shall be applied, as provided in the governing specifications, as a dry powder or mixed with water to form a slurry.

(2) **Type B, Commercial Lime Slurry,** shall be a pumpable suspension of solids in water. The water or liquid portion of the slurry shall not contain dissolved material in sufficient quantity and/or nature injurious or objectionable for the purpose intended. The solids portion of the mixture, when considered on the basis of "solids content", shall consist principally of hydrated lime of a quality and fineness sufficient to meet the following requirements as to chemical composition and residue.

(a) **Chemical Composition.** The "solids content" of the lime slurry shall have a Hydrate alkalinity $Ca(OH)_2$ of not less than 87 percent by weight.

(b) **Residue.** (Wet Sieve). The percent by weight of residue retained in the "solids content" of lime slurry shall conform to the following requirements:

Residue retained on a No. 6 (3360-micron) sieve . . . . . Max. 0.1%
Residue retained on a No. 30 (590-micron) sieve . . . . . Max. 3.0%

Type B, Commercial Lime Slurry, shall conform to one of the following three grades:

Grade 1: The "Dry Solids Contents" shall be at least 31 percent by weight of the slurry.

Grade 2: The "Dry Solids Contents" shall be at least 35 percent by weight of the slurry.

Grade 3: The "Dry Solids Contents" shall be at least 46 percent by weight of the slurry.

264.3. Sampling and Testing. The sampling and testing of lime slurry shall be as determined by Test Method Tex-600-J, "Lime Testing Procedure".

264.4. Measurement and Payment. Lime will be measured and paid for in accordance with the governing specifications for the items of construction in which lime is used.

ITEM 270

PORTLAND CEMENT TREATMENT FOR MATERIALS IN PLACE

270.1. Description. This item shall consist of treating the subgrade, existing subbase or existing base by the pulverizing, addition of Portland cement, mixing, wetting and compacting the mixed material to the required density. This item applies to natural ground, embankment, or existing pavement structure and shall be constructed as specified herein and in conformity with the typical sections, lines and grades as shown on the plans or as established by the Engineer.

Cement treatment shall not be mixed or placed when the air temperature is below 40 F and is falling, but may be mixed or placed when the air temperature is above 35 F and is rising, the temperature being taken in the shade and away from artificial heat and with the further provision that cement treatment shall be mixed or placed only when weather conditions, in the opinion of the Engineer, are suitable.

270.2. Materials.

(1) **Soil.** Soil shall consist of approved material free from vegetation or other objectionable matter encountered in the existing roadbed and other acceptable material used in preparation of the roadbed in accordance with this specification.

(2) **Portland Cement.** Cement shall be either Type I, II or III Portland cement conforming to the Item, "Hydraulic Cement".

The Contractor, at his option, may use bulk cement, provided the apparatus for handling, weighing and spreading the cement is approved by the Engineer in writing. Cement weighing equipment shall be as specified below.

(3) **Water.** Water shall be free from substances deleterious to the hardening of the cement treatment and shall be approved by the Engineer.

(4) If the minimum design strength of the cement treatment mixture or the percent of cement is specified on the plans, it will be determined by preliminary tests performed in accordance with Test Method Tex-120-E.

270.3. Equipment.

General. Equipment utilized where materials are specified to be measured or proportioned by weight shall conform to the requirements of the Item, "Weighing and Measuring Equipment". Equipment necessary for the proper construction of the work shall be on the project, in first-class working condition, and be approved by the Engineer, both as to type and condition, prior to the start of construction operations. The Contractor shall at all times provide sufficient equipment to enable continuous prosecution of the work and its completion in the required number of working days.

Portland cement treatment for materials in place may be constructed with any machine or combination of machines and auxiliary equipment that will produce results as outlined in this specification.

Mixing may be accomplished by (1) a multiple-pass traveling mixing plant or (2) a single-pass traveling mixing plant.

The equipment provided by the Contractor shall be operated by experienced and capable workmen and shall be that necessary to provide a cement treatment meeting the requirements herein specified.

270.4. Construction Methods.

(1) General. It is the primary requirement of this specification to secure a completed course of treated material containing a uniform Portland cement mixture free from loose or segregated areas, of uniform density and moisture content, well bound for its full depth and with a smooth surface suitable for placing subsequent courses. It shall be the responsibility of the Contractor to regulate the sequence of his work, to process a sufficient quantity of material to provide full depth as shown on plans, to use the proper amount of Portland cement, maintain the work and rework the courses as necessary to meet the above requirements.

(2) Preparation of Roadbed. Before other construction operations are begun, the roadbed shall be graded and shaped as required to construct the Portland cement treatment for material in place in conformance with the lines, grades, thickness and typical cross section shown on the plans. Unsuitable soil or material shall be removed and replaced with acceptable soil.

The subgrade shall be firm and able to support without displacement the construction equipment and the compaction hereinafter specified. Soft or yielding subgrade shall be corrected and made stable before construction proceeds.

(3) Pulverization. The soil shall be so pulverized that, at the completion of moist-mixing, when all non-slaking aggregate retained on the No. 4 sieve are removed, the remaining material shall meet the following requirements when tested from the roadway in the roadway condition by Test Method Tex-101-E, (Part III).

	Percent
Minimum passing 1-inch sieve	100
Minimum passing No. 4 sieve	80

Old bituminous wearing surface shall be pulverized so that 100 percent will pass the 2-inch sieve.

(4) Application of Cement (Roadmix). Portland cement shall be spread uniformly on the soil at the rate specified on the plans or approved by the Engineer. If a bulk cement spreader is used, it shall be positioned by string-lines or other approved method during spreading to insure a uniform distribution of cement.

Cement shall be applied only to such an area that all the operations can be continuous and completed in daylight within 6 hours of such application.

The percentage of moisture in the soil, at the time of cement application, shall not exceed the quantity that will permit uniform and intimate mixture of soil and cement during dry mixing operations, and it shall not exceed the specified optimum moisture content for the soil cement mixture. The determination of moisture content shall be in accordance with Test Method Tex-103-E.

No equipment, except that used in spreading and mixing, will be allowed to pass over the freshly spread cement until it is mixed with the soil.

(5) **Mixing and Processing.** Unless otherwise shown on the plans, either method (a) or (b) below may be used at the option of the Contractor.

(a) **Multiple-Pass Traveling Mixing Plant.** After the cement has been applied it shall be dry-mixed with the soil. Mixing shall continue until the cement has been sufficiently blended with the soil to prevent the formation of cement balls when water is applied. Any mixture of soil and cement that has not been compacted and finished shall not remain undisturbed for more than 30 minutes.

Immediately after the dry mixing of soil and cement is complete, water as necessary shall be uniformly applied and incorporated into the mixture. Pressurized equipment and supply provided shall be adequate to insure continuous application of the required amount of water to sections being processed within 3 hours of application of the cement. Proper care shall be exercised to insure proper moisture distribution at all times. After the last increment of water has been added, mixing shall continue until a thorough and uniform mix has been obtained.

(b) **Single-Pass Traveling Mixing Plant.** After the cement has been applied it shall be sufficiently dry-mixed with the soil to prevent the formation of cement balls when water is applied. Unpulverized soil lumps in the soil cement mixture immediately behind the mixer that are dry will not be allowed. Should this condition prevail, the Contractor shall "pre-wet" the raw soil as necessary to correct this condition.

The mixer shall be provided with means for visibly and accurately gauging the water application. The water shall be applied uniformly through a pressure spray bar.

After cement is spread, mixing operations shall proceed as follows:

The mixer shall in one continuous operation mix the air-dry soil and cement full depth, and the required moisture uniformly, thoroughly moist-mix the soil, cement and water, spread the completed soil cement mixture evenly over the machine processed width of the subgrade and leave it in a loose condition ready for immediate compaction.

The soil and cement mixture shall not remain undisturbed, after mixing and before compacting, for more than 30 minutes.

(6) **Compaction and Finishing.** The material shall be compacted to not less than the density shown on the plans. At the start of compaction, the percentage of moisture in the mixture and in unpulverized soil lumps, based on oven-dry weights, shall not be below or more than two percentage points above the specified optimum moisture content and shall be less than that quantity which will cause the soil cement mixture to become unstable dur-

ing compaction and finishing. When the uncompacted soil cement mixture is wetted by rain so that the average moisture content exceeds the tolerance given at the time of final compaction, the entire section shall be reconstructed in accordance with this specification at the sole expense of the Contractor.

Density testing will be as outlined in Test Method Tex-114-E and Test Method Tex-115-E. Samples for laboratory testing shall be representative of soil cement mixture obtained from the area being processed.

Prior to the beginning of compaction, the mixture shall be in a loose condition for its full depth. The loose mixture then shall be uniformly compacted to the specified density within 2 hours.

After the soil and cement mixture, excepting the top mulch, is compacted, water shall be uniformly applied as needed and thoroughly mixed in with a spiketooth harrow or equal. The surface shall then be reshaped to its required lines, grades and cross section and then lightly scarified to loosen any imprint left by the compacting or shaping equipment.

The resulting surface shall be thoroughly rolled with a pneumatic tire roller and "clipped", "skinned" or "tight bladed" by a power grader to a depth of approximately 1/4 inch, removing all loosened soil and cement from the section. The surface shall then be thoroughly compacted with the pneumatic roller, adding small increments of moisture as needed during rolling. If plus No. 4 aggregate is present in the mixture, one complete coverage of the section with the flat wheel roller shall be made immediately after the "clipping" operation. When directed by the Engineer, surface finishing methods may be varied from this procedure provided a dense, uniform surface, free of surface compaction planes, is produced. The moisture content of the surface material must be maintained at its specified optimum during all finishing operations. Surface compaction and finishing shall proceed in such a manner as to produce, in not more than 2 hours, a smooth, closely knit surface, free of cracks, ridges or loose material conforming to the crown, grade and line shown on the plans.

270.5. Curing.

(1) **Protection and Cover.** After the cement treated course has been finished as specified herein, the surface shall be protected against rapid drying by either of the following curing methods for a period as shown on plans but in no case less than 3 days or until the surface or subsequent courses are placed:

(a) Maintain in a thorough and continuously moist condition by sprinkling.

(b) Apply a 2-inch layer of earth on the completed course and maintain in a moist condition.

(c) Apply an asphalt membrane to the treated course, immediately after same is completed. Unless otherwise shown on the plans, the asphalt shall be RC-250, in accordance with the Item, "Asphalts, Oils and Emulsions". The asphalt shall completely cover and seal the total surface of the base and fill all voids. If the Contractor elects to use this method, it shall be his responsibility to protect the asphalt membrane from being picked up by traffic by either sanding or dusting the surface of same. The asphalt membrane may remain in place when the proposed surface or other base courses are placed.

(2) **Surface.** The surface or other base courses may be applied on the finished base as soon after completion as operations will permit.

270.6. Construction Joints. At the end of each day's construction a straight transverse construction joint shall be formed by cutting back into the total width of completed work to form a true vertical face free of loose and shattered material.

Cement treatment for large, wide areas shall be built in a series of parallel lanes of convenient length and width meeting the approval of the Engineer.

270.7. Traffic. Completed sections of cement treated material in place may be opened immediately to local traffic and to construction equipment and to all traffic after the curing period, provided the cement treated course has hardened sufficiently to prevent marring or distorting the surface by equipment or traffic.

270.8. Maintenance. The Contractor shall be required, within the limits of his contract, to maintain the cement treated course in good condition until all work has been completed and accepted. Maintenance shall include immediate repairs of any defects that may occur. This work shall be done by the Contractor at his own expense and repeated as often as may be necessary to keep the area continuously intact. Faulty work shall be replaced for the full depth of treatment. It is the intent of this specification that the Contractor construct the plan depth of cement treatment in one homogeneous mass. The addition of thin stabilized layers to provide the minimum specified depth will not be permitted.

270.9. Measurement. The work performed and material furnished as prescribed by this item will be measured as follows:

Cement treatment for materials in place will be measured by the square yard to lines as shown on the typical sections.

Portland cement specified by the Engineer for incorporation in the cement treatment will be measured by the barrel of 376 pounds of cement.

270.10. Payment. The work performed and material furnished as prescribed by this item and measured in accordance with the method indicated

on the plans and proposal and in accordance with the applicable provisions of "Measurement" above will be paid for at the unit price bid for "Cement Treatment (Existing Materials)" and "Portland Cement".

The unit prices bid shall each be full compensation for preparing the roadbed; for furnishing all material; for all freight involved; for furnishing scales and labor involved in weighing the material; for pulverizing, applying cement, water, all processing, mixing, spreading, sprinkling, compacting, finishing and curing the cement treated soil; and for all manipulations, labor, equipment, fuels, tools and incidentals necessary to complete the work except as follows:

All earthwork involved in preparation of subgrade, other than that incidental to the specified fine grading, and manipulation necessary to reshape and compact the existing section and to compact the material added, will be measured and paid for in accordance with the provision governing the pertinent roadway items. No direct payment will be made for blading, wetting or rolling, this being considered as subsidary work pertaining to the construction of the cement treated course.

ITEM 272

PORTLAND CEMENT TREATMENT FOR BASE COURSES

272.1. **Description.** This item shall consist of treating base and subbase by addition of Portland cement, mixing, wetting and compacting the mixed material in accordance with the specifications governing the base and subbase courses. This item applies to the treatment of base or subbase courses placed under this contract and shall be constructed as herein specified and in conformity with the items governing the base or subbase courses.

Portland cement treatment shall not be mixed or placed when the air temperature is below 40 F and is falling, but may be mixed or placed when the air temperature is above 35 F and is rising, the temperature being taken in the shade and away from artificial heat and with the further provision that Portland cement treatment for base courses shall be mixed or placed only when weather conditions, in the opinion of the Engineer, are suitable.

272.2. **Materials.**

(1) Base and subbase materials shall meet the requirements shown on the plans or in pertinent specifications.

(2) Cement shall be either Type I, II or III Portland cement conforming to the Item, "Hydraulic Cement".

The Contractor, at his option, may use bulk cement, provided the apparatus for handling, weighing and spreading the cement is approved by the Engineer in writing. Cement weighing equipment shall be as specified below.

(3) Water shall be free from substances deleterious to the hardening of the treated base or subbase, and shall be approved by the Engineer.

(4) If the minimum design strength of the Portland cement treated base or subbase or the percent of cement is specified on the plans, it will be determined by preliminary tests performed in accordance with Test Method Tex-120-E.

272.3. Equipment. Where materials are specified to be measured or proportioned by weight, equipment shall conform to the requirements of the Item, "Weighing and Measurement Equipment". Equipment necessary for proper prosecution of the work shall be on the project and approved by the Engineer prior to the beginning of construction operations. All equipment used shall be maintained in a satisfactory working condition. The Contractor shall employ adequate methods in performing the work and shall conduct his operations in a satisfactory and workmanlike manner.

Portland cement treatment for base and subbase may be constructed with any machine or combination of machines and auxiliary equipment that will produce results as required by this specification.

Mixing may be accomplished by (1) a multiple-pass traveling mixing plant, (2) a single-pass traveling mixing plant or (3) a central mixing plant.

272.4. Construction Methods.

(1) **General.** The primary requirement of this specification is to secure a completed course of base or subbase material containing a uniform Portland cement mixture, free from loose or segregated areas, of uniform density and moisture content, well bound and compacted for its full depth with a smooth surface suitable for placing additional subbase, base or surface courses. It shall be the responsibility of the Contractor to regulate the sequence of his work, to process a sufficient quantity of material to provide full depth as shown on plans, to use the proper amount of Portland cement, maintain the work and rework the courses as necessary to meet the above requirements.

The subgrade shall be prepared and shaped to the typical sections, lines and grades in accordance with pertinent base and subbase specifications, as shown on plans or as established by the Engineer.

The base or subbase material, as provided in the governing specifications, shall be delivered, placed and spread in the required amount per sta-

tion. The material shall be manipulated as specified for the base or subbase course or as directed by the Engineer and thoroughly mixed prior to addition of the Portland cement.

Where, in the opinion of the Engineer, pulverization is required, the base or subbase material shall be so pulverized that, at the completion of moist mixing, when all non-slaking aggregate retained on the No. 4 sieve are removed, the remainder of the material shall meet the following requirements when tested from the roadway in the roadway condition by Test Method Tex-101-E, (Part III).

	Percent
Minimum passing 1-inch sieve	100
Minimum passing No. 4 sieve	80

(2) **Application of Cement (Roadmix).** Portland cement shall be spread uniformly on the base or subbase at the rate specified on the plans or approved by the Engineer. If a bulk cement spreader is used, it shall be positioned by string lines or other approved method during spreading to insure a uniform distribution of cement.

Cement shall be applied only to such an area that all the operations can be continuous and completed in daylight within 6 hours of such application.

The percentage of moisture in the base or subbase material, at the time of cement application, shall not exceed the quantity that will permit uniform and intimate mixture of the material and cement during dry mixing operations, and it shall not exceed the specified optimum moisture content for the Portland cement treatment mixture. The determination of moisture content shall be in accordance with Test Method Tex-103-E.

No equipment, except that used in spreading and mixing, will be allowed to pass over the freshly spread cement until it is mixed with the base or subbase material.

(3) **Mixing and Processing.** Unless otherwise shown on the plans, either method (a), (b) or (c) below may be used at the option of the Contractor.

(a) **Multiple-Pass Traveling Mixing Plant.** After the cement has been applied it shall be dry-mixed with the base or subbase material. Mixing shall continue until the cement has been sufficiently blended with the base or subbase material to prevent the formation of cement balls when water is applied. Any mixture that has not been compacted and finished shall not remain undisturbed for more than 30 minutes.

Immediately after the dry mixing of base or subbase material and cement is complete, water as necessary shall be uniformly applied and incorporated into the mixture. Pressurized equipment and supply provided shall be adequate to insure continuous application of the required amount of water to sections being processed within 3 hours of application of the ce-

ment. Proper care shall be exercised to insure proper moisture distribution at all times. After the last increment of water has been added, mixing shall continue until a thorough and uniform mix has been obtained.

(b) **Single-Pass Traveling Mixing Plant.** After the cement has been applied it shall be sufficiently dry-mixed with the base or subbase material to prevent the formation of cement balls when water is applied. Unpulverized soil lumps in the Portland cement treatment mixture immediately behind the mixer that are dry will not be allowed. Should this condition prevail the Contractor shall "pre-wet" the raw base or subbase material as necessary to correct this condition.

The mixer shall be provided with means for visibly and accurately gauging the water application. The water shall be applied uniformly through a pressure spray bar.

After cement is spread, mixing operations shall proceed as follows:

The mixer shall in one continuous operation mix the air-dry base or subbase material and cement full depth, add the required moisture uniformly, thoroughly moist-mix the base or subbase material, cement and water, spread the completed Portland cement treatment mixture evenly over the machine processed width of the subgrade and leave it in a loose condition ready for immediate compaction.

The Portland cement treatment for base and subbase mixture shall not remain undisturbed, after mixing and before compacting, for more than 30 minutes.

(c) **Central Mixing Plant.** The base or subbase material and cement shall be dry-mixed in a pug mill of either the batch or continuous-flow type. The plant shall be equipped with feeding and metering devices which will add the base or subbase material, cement and water into the mixer in the specified quantities. Base or subbase material and cement shall be mixed sufficiently to prevent cement balls from forming when water is added. Mixing shall continue until a uniform and intimate mixture of base or subbase material, cement and water is obtained.

The mixture shall be hauled to the construction site in suitable vehicles equipped with protective covers. The mixture shall be placed on the moistened subgrade in a uniform layer by an approved spreader or spreaders. Not more than 30 minutes shall elapse between the placement of Portland cement treatment in adjacent lanes at any location except at longitudinal construction joints. Not more than 30 minutes shall elapse between the start of spreading the base or subbase material and cement mixture and the start of compaction. Not more than 60 minutes shall elapse between the start of moist mixing and the start of compaction of soil cement. The layer of Portland cement treatment shall be uniform in thickness and surface con-

tour, and in such quantity that the completed base will conform to the required grade, cross section and governing base or subbase specification. Dumping of the mixture in piles or windrows upon the subgrade will not be permitted.

(4) **Compaction and Finishing.** The material shall be compacted to not less than the density shown on the plans. At the start of compaction, the percentage of moisture in the mixture and in unpulverized soil lumps, based on oven-dry weights, shall not be below or more than two percentage points above the specified optimum moisture content, and shall be less than that quantity which will cause the Portland cement treatment mixture to become unstable during compaction and finishing. When the uncompacted mixture is wetted by rain so that the average moisture content exceeds the tolerance given at the time of final compaction, the entire section shall be reconstructed in accordance with this specification at the sole expense of the Contractor.

Density testing will be as outlined in Test Method Tex-114-E and Test Method Tex-115-E. Samples for laboratory testing shall be representative of Portland cement treated material obtained from the area being processed.

Prior to the beginning of compaction, the mixture shall be in loose condition for its full depth. The loose mixture then shall be uniformly compacted to the specified density within 2 hours.

After the base or subbase material and cement mixture, excepting the top mulch, is compacted, water shall be uniformly applied as needed and thoroughly mixed in with a spiketooth harrow or equal. The surface shall then be reshaped to the required lines, grades and cross section and then lightly scarified to loosen any imprint left by the compacting or shaping equipment.

The resulting surface shall be thoroughly rolled with a pneumatic tire roller and "clipped", "skinned" or "tight bladed" by a power grader to a depth of approximately 1/4 inch, removing all loosened soil and cement from the section.

The surface shall then be thoroughly compacted with the pneumatic tire roller, adding small increments of moisture as needed during rolling. If plus No. 4 aggregate is present in the mixture, one complete coverage of the section with the flat wheel roller shall be made immediately after the "clipping" operation. When directed by the Engineer, surface finishing methods may be varied from this procedure provided a dense, uniform surface, free of surface compaction planes, is produced. The moisture content of the surface material must be maintained at its specified optimum during all finishing operations. Surface compaction and finishing shall proceed in

such a manner as to produce, in not more than 2 hours, a smooth, closely knit surface, free of cracks, ridges or loose material conforming to the crown, grade and line shown on the plans.

272.5. **Curing.**

(1) **Protection and Cover.** After the Portland cement treatment for base or subbase course has been finished as specified herein, the surface shall be protected against rapid drying by either of the following curing methods for a period as shown on plans but in no case less than 3 days or until the surface or an additional base course is placed:

(a) Maintain in a thorough and continuously moist condition by sprinkling.

(b) Apply a 2-inch layer of earth on the completed course and maintain in a moist condition.

(c) Apply an asphalt membrane to the course, immediately after same is completed. Unless otherwise shown on the plans, the asphalt shall be RC-250, in accordance with the Item, "Asphalt, Oils and Emulsions". The asphalt shall completely cover and seal the total surface of the base and fill all voids. If the Contractor elects to use this method, it shall be his responsibility to protect the asphalt membrane from being picked up by traffic by either sanding or dusting the surface of same. The asphalt membrane may remain in place when the proposed surface or other base courses are placed.

(2) **Surface.** The surface or other base courses may be applied on the finished section as soon after completion as operations will permit.

272.6. **Construction Joints.** At the end of each day's construction a straight transverse construction joint shall be formed by cutting back into the total width of completed work to form a true vertical face free of loose and shattered material.

Portland cement treatment for base or subbase for large, wide areas shall be built in a series of parallel lanes of convenient length and width meeting the approval of the Engineer.

272.7. **Traffic.** Completed sections of Portland cement treatment may be opened immediately to local traffic and to construction equipment, and to all traffic after the curing period, provided the mixture has hardened sufficiently to prevent marring or distorting the surface by equipment or traffic.

272.8. **Maintenance.** The Contractor shall be required, within the limits of his contract, to maintain the Portland cement treatment in good condition until all work has been completed and accepted. Maintenance shall include immediate repairs of any defects that may occur. This work shall be done by the Contractor at his own expense and repeated as often as may be

necessary to keep the area continuously intact. Faulty work shall be replaced for the full depth of treatment. It is the intent of this specification that the Contractor construct the plan depth of cement treated base in one homogeneous mass. The addition of thin stabilized layers to provide the minimum specified depth will not be permitted.

272.9. **Measurement.** When Portland cement is added to the base or subbase materials provided under pertinent specifications, the specification applicable to that item shall govern except that manipulation of the materials and application, mixing, measurement and payment for Portland cement shall be as required herein.

Portland cement specified by the Engineer for treatment for base or subbase courses will be measured by the barrel of 376 pounds of cement.

272.10. **Payment.** Work performed and materials furnished as prescribed by this specification and measured as provided under "Measurement" will be paid for at the unit price bid per barrel of 376 pounds for "Portland Cement", which price shall be full compensation for supplying the Portland cement, for all mixing, spreading, drying, application of the Portland cement, mixing water, shaping and maintaining, for all manipulations required, for all hauling and freight involved, for all tools, equipment, labor and for all incidentals necessary to satisfactorily complete the work, except as hereinafter specified.

Payment for the preparation of the subgrade will be measured and paid for in accordance with the pertinent specification items.

Measurement and payment for all other items involved in constructing base or subbase courses, including sprinkling and rolling, will be as provided in the governing base or subbase item.

ITEM 274

CEMENT STABILIZED BASE

274.1. **Description.** This item shall consist of a foundation for surface course or for other base courses; shall be composed of a mixture of flexible base material, Portland cement and water; and shall be constructed as herein specified and in conformity with the typical cross sections shown on the plans and to the lines and grades established by the Engineer.

274.2. **Materials.**

(1) **Portland Cement.** Cement shall be either Type I, II or III Portland cement conforming to the Item, "Hydraulic Cement".

(2) **Water.** Water shall meet the requirements of water for the Item, "Concrete Pavement".

(3) **Base Materials.** The base material shall consist of durable coarse aggregate particles of shell, bank-run gravel, processed gravel, iron ore gravel, crushed stone or crushed blast furnace slag combined with approved binder material. Local material sources shall be approved prior to use. Material pits shall be opened up in such a manner as to expose the vertical faces of the various strata of acceptable material and unless otherwise directed, the material shall be secured in successive vertical cuts extending through all of the exposed strata in order that a uniformly mixed material is secured.

The base material, when tested according to Test Method Tex-110-E, shall meet the following requirements unless otherwise specified on the plans:

Type	A	B	C	D		E	F	G
Square Sieve	Sand Shell	Iron Ore Gravel	Crushed Stone	Processed Gravel Gr.1	Processed Gravel Gr.2	Crushed Blast Furnace Slag	Bank-run Gravel	As Shown on Plans
PERCENTAGE RETAINED, SIEVES								
2-1/2"		0						
1-3/4"			0-10	0-5		0	0-5	
1-1/4"	0-10							
1/2"					0			
3/8"						25-45		
No. 4	30-65		45-75	30-75	15-35	45-65	30-75	
No. 40	50-75	45-65	55-80	60-85	55-85	70-85	65-85	

The material passing the No. 40 sieve shall be known as "Soil Binder" and unless otherwise shown on plans shall meet the following requirements when tested in accordance with Test Method Tex-106-E:

The Plasticity Index shall not exceed 10.
The Liquid Limit shall not exceed 35.

Unless otherwise indicated on the plans, when the type of cement stabilized base is not specified, the Contractor may select any of the foregoing materials as aggregate for use in construction of cement stabilized base.

274.3. Equipment. Where materials are to be measured or proportioned by weight, equipment shall conform to the requirements of the Item "Weighing and Measuring Equipment". Equipment necessary for the proper mixing and placing of the stabilized base shall be in first-class working condition and shall be approved by the Engineer both as to type and condition prior to the start of construction operations. The Contractor shall at all times provide sufficient equipment to allow continuous prosecution of the work and to insure that the mixing, placing and compaction operations are performed and completed within the time limit specified herein. All equipment shall be operated by experienced and capable workmen.

274.4. Proportioning of Mixes. Cement stabilized base mixture shall be

proportioned as set out below under "Strength Design" or as set out below under "Cement Factor Design". Unless otherwise shown on the plans, the mixture shall be proportioned by "Cement Factor Design".

(1) **Strength Design.** The mix will be designed with the intention of producing a minimum average compressive strength of 650 pounds per square inch at the age of seven days using unconfined compression testing procedures unless otherwise specified on the plans. Cement stabilized base specimens shall be prepared, cured and tested as outlined in Test Method Tex-120-E.

(a) **Preliminary Design.** Prior to the beginning of cement stabilized base placement, the Contractor shall designate for the approval of the Engineer the source of base materials proposed for use and shall submit representative samples of the material for quality and gradation tests and for making design mixes. Three test cylinders will be made and tested for each of the following cement factors: 4%, 6% and 8%. From these preliminary tests, the cement content required to produce cement stabilized base of the specified strength will be selected by the Engineer. The cement content shall not be less than 4.5 percent of the dry weight of the cement base material mixture.

(b) **Test Specimens.** The strength of the mix will be checked by tests of the mix as placed on the roadway. A minimum of three test specimens shall be made for each 1000 tons of material or fraction thereof placed each day. For these tests the material will be sampled prior to compaction. Changes in the mix design, including changes in the cement content, will be made when the average seven-day unconfined compressive strength of the cement stabilized base material, as indicated by the unconfined compressive strength values obtained from tests of the last three days' placement, departs from the intended strength by more than ten percent except that the cement rate shall not be reduced below 4.5 percent. In determining the average strength, the Engineer may, at his option, reject any test as nonrepresentative that departs from this seven day average by more than 10 percent and compute the average from the values of the remaining tests.

(c) The Contractor may, at his option, after furnishing the materials for the preliminary tests outlined above, start construction of cement stabilized base using a cement factor from the following list:

Aggregate Material	Cement % by Dry Weight	Aggregate Material	Cement % by Dry Weight
Sand-Shell	7.0	Iron Ore Gravel	5.9
Processed Gravel Gr 1 or 2	6.7	Crushed Stone	4.7
		Crushed Blast Furnace Slag	4.7
Bank-run Gravel	5.9		

The Contractor will be allowed to construct cement stabilized base with the cement factor listed herein until the preliminary test results are available. Operation shall then continue under Section 274.4(1) (b) above.

(2) **Cement Factor Design.** Unless otherwise shown on the plans, the cement content shall be as follows for each type of aggregate:

Aggregate Material	Cement % by Dry Weight	Aggregate Material	Cement % by Dry Weight
Sand-Shell	7.0	Iron Ore Gravel	6.0
Processed Gravel Gr 1 or 2	7.0	Crushed Stone	5.0
		Crushed Blast Furnace Slag	5.0
Bank-run Gravel	6.0		

274.5. **Sampling and Testing.** Material for the preliminary tests described in the preceding sections of this specification shall be furnished by the Contractor at no cost to the State. The Engineer will perform all tests required at no cost to the Contractor. The Contractor may make such other tests as he desires at his own expense. In addition to tests mentioned above under Article 274.4., "Proportioning of Mixes", tests for moisture and density will be made on the material immediately following placement. The determination of moisture content shall be in accordance with Test Method Tex-103-E. As soon after placement as it is practical, the thickness of the material will be determined by coring.

274.6. **Construction Methods.**

(1) **Preparation of Subgrade.** The roadbed shall be excavated and shaped in conformity with the typical sections shown on the plans to the lines and grades established by the Engineer. All unstable or otherwise objectionable material or roots shall be removed from the subgrade and replaced with approved material. All holes, ruts and depressions shall be filled with approved material and, if required, the subgrade shall be thoroughly wetted with water and reshaped and rolled to the extent directed in order to place the subgrade in an acceptable condition to receive the base material. The surface of the subgrade shall be finished to lines and grades as established and shall be in conformity with the typical sections shown on the plans. A subgrade planer may be used. Any deviation in excess of one-half inch in cross section and in length of 16 feet measured longitudinally shall be corrected by loosening, adding or removing material, reshaping and compacting by sprinkling and rolling. Sufficient subgrade shall be prepared in advance to insure satisfactory prosecution of the work. Material excavated in preparation of the subgrade shall be utilized in the construction of adjacent shoulders and slopes or otherwise disposed of as directed.

(2) **Mixing.** The cement, base material and water shall be thoroughly mixed in an approved processing plant. The mixer shall be a stationary pug

mill. Batch or continuous type mixers which will produce a uniform material will be allowed. The plant shall be equipped with feeding and metering devices which will add the base material, cement and water into the mixer in the specified quantities. Regardless of the type of mixer employed, the resulting mixture shall be homogeneous and uniform in appearance. The moisture content of the mixture shall be maintained between optimum moisture and two percentage points above optimum moisture or shall be maintained within the range established by the Engineer. The amounts of cement and moisture are expressed as percentages of dry weight of the combined base material and cement.

(3) **Placing.** The cement stabilized base shall be placed in uniform layers on the prepared subgrade to produce the depth specified on the plans. The depth of layers shall be as approved by the Engineer. To insure homogeneous distribution of the base material in each layer, the material shall be placed using an approved spreader. The spreading operations shall be done in such a manner as to eliminate nests or pockets of material of non-uniform gradation resulting from segregation in the hauling or dumping operations and in such a manner as to eliminate planes of weakness. Construction joints between new cement stabilized base and cement stabilized base that has been in place four hours or longer shall be approximately vertical. The plane of the joint may be formed by a header which shall be removed immediately prior to placing the subsequent base or the base placed first may be cut to an approximately vertical edge immediately prior to placing the new base.

Only one longitudinal joint will be permitted where cement stabilized base is placed underneath freeway main lanes and shoulders unless otherwise permitted by the Engineer. This joint shall normally be placed at the centerline of the highway. Longitudinal joints will not be permitted underneath frontage roads and ramps unless otherwise permitted by the Engineer.

Equipment permitted in the Item, "Concrete Pavement", may be used for placing cement stabilized base.

Cement stabilized base shall not be placed when the air temperature is below 40 F and is falling, but may be placed when the air temperature is above 35 F, and is rising, the temperature being taken in the shade and away from artificial heat and with the further provision that cement stabilized base shall be mixed or placed only when weather conditions in the opinion of the Engineer are suitable for such work.

(4) **Compaction.** Compaction shall be carried out under the controlled density method or under the ordinary compaction method as outlined below and as shown on the plans.

The optimum moisture content and desirable density shall be de-

termined by Test Method Tex-114-E and shall be checked in the field by Test Method Tex-115-E. When the uncompacted cement stabilized base mixture is wetted by rain so that at the time of final compaction the average moisture content exceeds the range specified, the entire section shall be removed and reconstructed in accordance with this specification at the expense of the Contractor.

(a) Density Control Method. Unless shown otherwise on the plans, the cement stabilized base shall be compacted to a density of not less than 95 percent of Compaction Ratio Density, Test Method Tex-114-E. The moisture content of the mixture during compaction operations shall be maintained within a range from optimum percentage to two percentage points above the optimum percentage or within the range directed by the Engineer.

(b) Ordinary Compaction Method. The cement stabilized base shall be rolled as directed by the Engineer until uniform compaction is obtained. Rollers used shall be as indicated on the plans. During this operation the shape of the course shall be smooth and in conformity with the typical section shown on the plans and to the established lines and grades.

(5) Finishing. After the final course of cement stabilized base, except the top mulch, is compacted, the surface shall be finished to grade and section by blading and shall be sealed with approved pneumatic tire or flat wheel rollers. When directed by the Engineer, surface finishing methods may be varied from this procedure provided a dense uniform surface is produced and further provided that the construction of compaction planes is avoided. Unless otherwise shown on plans, (1) not more than 60 minutes shall elapse between the start of mixing and the time of starting the compaction of the cement treated mixture on the prepared subgrade, (2) any mixture of aggregate, cement, and water that has not been compacted shall not be left undisturbed for more than 30 minutes, and (3) the compaction shall be completed within 2 hours of the time water is added to the mixture.

In that area where pavement or surface treatment is to be placed, any deviation from the plan surface in excess of one quarter inch in cross section and in length of 16 feet measured longitudinally shall be corrected immediately by loosening, adding or removing materials, reshaping and recompacting by sprinkling and rolling or high spots may be removed by grinding. All irregularities, depressions or weak spots which develop shall be corrected immediately by scarifying the areas affected, adding suitable material as required, reshaping and recompacting.

(6) Curing. The cement stabilized base shall be kept wet for a period of 72 hours after completion of compaction. This may be done by sprinkling or by preventing the evaporation of water by placing an asphaltic membrane. The choice of curing method will belong to the Contractor unless a certain method of curing is required in the plans. If asphalt curing is required or if

asphalt curing is used by the Contractor, the asphalt used shall be of the type and grade shown on the plans or as approved by the Engineer and shall be applied at the rate of approximately 0.1 gallon per square yard unless the plans require otherwise. Asphalt shall meet the requirements of the Item, "Asphalts, Oils and Emulsions".

(7) **Traffic.** The cement stabilized base shall be opened to traffic as specified on the plans or as directed by the Engineer, but in no case before being cured at least three days.

274.7. **Maintenance.** The Contractor will be required within the limits of his contract to maintain the cement stabilized base in good condition until all work has been completed and accepted. Maintenance shall include immediate repair of any defects that may occur. This work shall be done by the Contractor at his entire expense and shall be repeated as often as may be necessary to keep the area continuously intact. Repairs to cement stabilized base shall be effected by replacing the base for its full depth rather than by adding a thin layer of cement stabilized material to the layer of base in need of repair.

274.8. **Penalty for Deficient Base Thickness.** The adjustment in unit prices provided for in this article will apply only when measurement for payment is by the square yard.

It is the intent of this specification that the cement stabilized base be constructed in strict conformity with the thickness and typical sections shown on plans. Where any such base is found not so constructed, the following rules relative to adjustment of payment for acceptable stabilized base and to replacement of faulty stabilized base shall govern.

(1) **Base Thickness.** The cement stabilized base will be core drilled by the Department prior to final acceptance. The thickness of the base will be determined by measurement of the cores in accordance with Test Method Tex-424-A.

For the purpose of establishing an adjusted unit price for cement stabilized base, units to be considered separately are defined as 1000 lineal feet of base in each traffic lane starting at the end of the base bearing the smaller station number. The last unit in each lane shall be 1000 feet plus the fractional part of 1000 feet remaining. Lane width shall be considered as the width between longitudinal construction joints or between the longitudinal construction joint and the edge of the cement stabilized base. For widening, the width shall be considered as the average width placed of the widened section that is deficient in thickness. One core will be taken at random by

the Department in each unit. When the measurement of the core from a unit is not deficient more than 0.5 inch from the plan thickness, full payment will be made. When such measurement is deficient more than 0.5 inch and not more than 1.50 inches from the plan thickness, two additional cores at intervals not less than 300 feet will be taken and used in the average thickness for that unit. An adjusted unit price as provided in Subarticle 274.8.(2) will be paid for the unit represented.

Other areas such as intersections, entrances, crossovers, ramps, etc., will be considered as one unit, and the thickness of each unit will be determined separately. Small irregular unit areas may be included as part of another unit. At such points as the Engineer may select in each unit, one core will be taken for each 1000 square yards of cement stabilized base, or fraction thereof, in the unit. If the core so taken is not deficient more than 0.5 inch from the plan thickness, full payment will be made. If the core is deficient in thickness by more than 0.5 inch but not more than 1.50 inches from the plan thickness, two additional cores will be taken from the area represented and the average of the three cores determined. If the average measurement of these three cores is not deficient more than 0.5 inch from the plan thickness, full payment will be made. If the average thickness of the three cores is deficient more than 0.5 inch but not more than 1.50 inches from the plan thickness, an adjusted unit price as provided in Subarticle 274.8.(2) will be paid for the area represented by these cores.

In calculating the average thickness of the cement stabilized base, measurements which are in excess of the specified thickness by more than 0.2 inch will be considered as the specified thickness plus 0.2 inch, and measurements which are less than the specified thickness by more than 1.50 inches will not be included in the average.

When the measurement of any core is less than the specified thickness by more than 1.50 inches, the actual thickness of the cement stabilized base in this area will be determined by taking additional cores at 10-foot intervals parallel to the center line in each direction from the affected location until in each direction a core is found which is not deficient by more than 1.50 inches. Areas found deficient in thickness by more than 1.50 inches shall be evaluated by the Engineer and, if in his judgment the deficient areas warrant removal, they shall be removed and replaced with stabilized base of the thickness shown on the plans.

Exploratory cores for deficient thickness will not be used in averages for adjusted unit price.

(2) **Price Adjustments.** Where the average thickness of cement stabilized base is deficient in thickness by more than 0.5 inch, but not more than 1.50 inches, payment will be made at an adjusted price as specified in the following table.

Cement Stabilized Base Deficiency

Deficiency in Thickness Determined by Cores Inches	Proportional Part of Contract Price Allowed
0.00 thru 0.50	100 percent
0.51 thru 0.75	80 percent
0.76 thru 1.00	70 percent
1.01 thru 1.25	60 percent
1.26 thru 1.50	50 percent

When the thickness of cement stabilized base is deficient by more than 1.50 inches and the judgment of the Engineer is that the area of such deficiency should not be removed and replaced, there will be no payment for the area retained.

(3) **No additional payment** over the contract unit price will be made for any cement stabilized base of a thickness exceeding that required by the plans.

274.9. **Measurement.** Work and acceptable materials as prescribed by this item will be measured for payment in accordance with the method indicated on the plans and in the proposal, the methods of measurement being as follows:

(1) When provided by the plans and the proposal, cement stabilized base will be measured by the square yard of completed and accepted work.

(2) When provided by the plans and the proposal, cement stabilized base will be measured by the ton of completed and accepted cement stabilized base. A ton will consist of 2,000 pounds of dry cement stabilized base mixture. Water in the mixture at time of weighing will be deducted.

(3) When provided by the plans and proposal, cement stabilized base will be measured by the cubic yard of completed and accepted cement stabilized base. Measurement will be made by the method of average end areas of authorized work.

274.10 **Payment.** The work performed and material furnished as prescribed by this item and measured in accordance with the method indicated on the plans and in the proposal and in accordance with the applicable provision of "Measurement" above will be paid for as follows:

(1) At the unit prices bid per square yard for "Cement Stabilized Base" of the type, grade, depth and compaction method specified or for "Cement Stabilized Base" of the depth and compaction method specified or at the adjusted unit price for base of deficient thickness as provided under Article 274.8., "Penalty for Deficient Base Thickness".

(2) At the unit price bid per ton for "Cement Stabilized Base" of the type, grade, depth and compaction method specified or for "Cement Stabilized Base" of the depth and compaction method specified.

(3) At the unit price bid per cubic yard for "Cement Stabilized Base" of the type, grade, depth and compaction method specified or for "Cement Stabilized Base" of the depth and compaction method specified.

The unit price bid will be full compensation for securing and furnishing all materials; including all royalty, freight and storage involved; for all processing, crushing and loading; for all hauling, delivering, stockpiling, placing, spreading, blading, mixing, stripping, dragging, finishing, curing and maintaining; for all fine grading; for wetting and compacting and all manipulation, labor, tools, and incidentals necessary to complete the work, except as follows:

When "Ordinary Compaction" is indicated on the plans, all sprinkling and rolling performed as required will be measured and paid for in accordance with the provisions of the Items, "Sprinkling" and "Rolling" respectively.

When "Density Control" is indicated on the plans, sprinkling and rolling will not be paid for directly, but shall be subsidiary to other bid items, unless otherwise provided by the plans.

Unless otherwise indicated on the plans, all excavation required by this item in the preparation of the subgrade and for the completion of the shoulders and slopes will be measured and paid for in accordance with the provisions governing the Items of "Roadway Excavation" and "Borrow", respectively, with the provision that yardage will be measured and paid for once only regardless of the manipulations involved.

When shown on the plans, the excavation required in the preparation and shaping of the subgrade for the completion of shoulders and slopes and for finishing roadway shall be performed, measured and paid for in accordance with the provisions governing the Items of "Blading", "Road Grader Work", or "Scraper Work". Payment under the Item "Roadway Excavation" will not be allowed within the limits designated by the Items "Blading", "Road Grader Work" and "Scraper Work".

ITEM 292

ASPHALT STABILIZED BASE
(Plant Mix)

292.1. **Description.** This item shall consist of base courses, subbase courses or foundation courses to be composed of a compacted mixture of mineral aggregate and asphaltic material mixed hot in a mixing plant.

292.2. **Materials.**

(1) **Asphaltic Materials.**

(a) **Mixture.** Asphalt for the paving mixture shall be of the type as determined by the Engineer and shall meet the requirements of the Item, "Asphalts, Oils and Emulsions". The grade of asphalt used shall be designated by the Engineer. If more than one type of asphaltic concrete mixture is specified for the project, only one grade of asphalt will be required for all types of mixtures unless otherwise shown on the plans. The Contractor shall notify the Engineer of the source of his asphaltic material prior to design or production of the asphaltic mixture and this source shall not be changed during the course of the project, except when authorized by the Engineer.

(b) **Tack Coat.** Asphaltic materials shall meet the requirements of the Item, "Asphalts, Oils and Emulsions", as approved by the Engineer. A cut-back asphalt is made by combining 50 to 70 percent by volume of the asphaltic material as specified for the type of paving mixture with 30 to 50 percent by volume of gasoline and/or kerosene. If cut-back asphalt is used, it may, upon approval from the Engineer, be diluted by the addition of an approved grade of gasoline and/or kerosene, not to exceed 15 percent by volume.

(2) **Mineral Aggregate.**

(a) **Description.** The material shall be crushed or uncrushed and shall be screened as necessary to meet the requirements hereinafter specified and shall consist of durable aggregate particles. Unless otherwise specified on the plans, one or more mineral aggregates may be used to produce the specified mixture. When shown on the plans, recycled materials containing both coarse and fine aggregate and residual asphalt may be used.

(b) Grades. The grading of the mineral aggregate shall conform to the limitations as shown below:

	Sieve	Percent Retained
Grade 1:	1-1/2"	0%
	1"	0-10%
	3/8"	30-55%
	No. 4	45-70%
	No. 40	70-85%
Grade 2:	1-3/4"	0%
	1-1/2"	0-10%
	No. 4	45-75%
	No. 40	60-85%
Grade 3:	1-3/4"	0%
	No. 40	60-85%
Grade 4:	As Shown on Plans.	

(c) Tests.

(1) Unless otherwise specified on the plans, the mineral aggregate for Grades 1, 2 and 3 shall meet the following physical requirements:

Los Angeles Abrasion ..... 50 Max.*
P.I. ..... 15 Max.
L.L. ..... 40 Max.
Sand equivalent value shall not be less than 40.

* Wet Ball Mill may be used in lieu of Los Angeles Abrasion when shown on the plans. A maximum Wet Ball Mill value of 50 is allowed.

(2) Mineral aggregate for Grade 4 shall meet the physical requirements shown on plans.

(3) Testing of the mineral aggregates shall be as required and in accordance with the following Department Standard Test Methods:

Preparation of Soil Constants and Sieve Analysis Tex-101-E
Liquid Limit Tex-104-E
Plastic Limit Tex-105-E
Plasticity Index Tex-106-E
Sieve Analysis Tex-110-E
Wet Ball Mill Tex-116-E
Los Angeles Abrasion Tex-410-A
Sand Equivalent Tex-203-F

(4) Samples for testing the material shall be taken prior to the mixing operations. Where more than one material is used, tests will be on the combined materials unless otherwise shown on the plans.

(d) Additives. Additives to facilitate mixing and/or improve the quality of the asphaltic mixture shall be used when noted on the plans or may be used upon written permission by the Engineer.

(e) Material Sources.

All materials shall be obtained from sources approved by the Engineer.

The mineral aggregate sources shall be opened up in such manner as to immediately expose the vertical faces of all the various strata of acceptable material and, unless otherwise directed by the Engineer, the material shall be secured in successive vertical cuts extending through all the exposed strata in order that a uniformly mixed material will be secured.

Unless otherwise shown on plans, one or more types of mineral aggregate or binder may be used to produce the specified mixture.

292.3. Asphalt Stabilized Mixture.

(1) Paving Mixture. The mixture shall consist of a uniform mixture of mineral aggregate and asphaltic material. The mineral aggregate will conform to the gradation requirements specified. The asphaltic material shall form from 3.0 to 9.0 percent of the mixture by weight unless otherwise shown on the plans. The design percent asphalt shall be determined in accordance with Test Method Tex-126-E or Test Method Tex-204-F and procedures outlined in the SDHPT Bulletin C-14. The required method of control along with any required strength, laboratory density and in-place density shall be specified on the plans. The percent asphalt in the mix shall be determined by either Extraction, Test Method Tex-210-F or Pressure Pycnometer, Test Method Tex-126-E.

(2) Tolerances. The Engineer will designate the asphalt content to be used in the mixture after design tests have been made with the aggregate to be used in the project. When tested as determined by the Engineer, samples of the mixture shall not vary from the asphalt content designated by the Engineer by more than 0.5 percent dry weight (based on total mixture).

292.4. Equipment.

(1) All equipment for the handling of all materials and mixing and placing of the mixture shall be maintained in good repair and operating condition and subject to approval of the Engineer. Any equipment found to be defective and affecting the quality of the mixture will be replaced.

(2) Mixing plants may be the weigh-batch type or the continuous mixing type or the drum mix type. All types of plants shall be equipped with satisfactory conveyors, power units, aggregate handling equipment, bins and dust collectors and shall consist of the following essential pieces of equipment.

When shown on the plans, weigh-batch and continuous types of mixing plants shall be equipped with automatic proportioning devices in accordance with the Item, "Weighing and Measuring Equipment." If automatic recording devices are required by the plans, they shall be in accordance with the Item, "Weighing and Measuring Equipment."

(a) Weigh-Batch Type.

Cold Aggregate Bin and Proportioning Device. The number of compartments in the cold aggregate bin shall be equal to or greater than the number of stockpiles of individual materials to be used.

The bin shall be of sufficient size to store the amount of aggregate required to keep the plant in continuous operation and of proper design to prevent overflow of material from one compartment to another. The proportioning device shall be such as will provide a uniform and continuous flow of aggregate in the desired proportion to the dryer. Each aggregate shall be proportioned in a separate compartment.

Dryer. The dryer shall be the type that continually agitates the aggregate during heating and in which the temperature can be so controlled that aggregate will not be injured in the necessary drying and heating operations required to obtain a mixture of the specified temperature. The burner, or combination of burners, and type of fuel used shall be such that in the process of heating the aggregate to the desired or specified temperature, no residue from the fuel shall adhere to the heated aggregate. A recording thermometer shall be provided which will record the temperature of the aggregate prior to the mixing operation. The dryer shall be of sufficient size to keep the plant in continuous operation.

Screening and Proportioning. The screening capacity and size of the hot aggregate bins shall be sufficient to screen and store the amount of aggregrate required to properly operate the plant and to keep the plant in continuous operation at full capacity. The hot bins shall be constructed so that oversize and overloaded material will be discarded through overflow chutes. Provisions shall be made to enable inspection forces to have easy and safe access to the proper location on the mixing plant where representative samples may be taken from the hot bins for testing. The plant shall be equipped with at least three hot bins. The aggregate shall be separated into the number of bins indicated on the plans or as directed by the Engineer.

Aggregate Weigh Box and Batching Scales. The aggregate weigh box and batching scales shall be of sufficient capacity to hold and weigh a complete batch of aggregate. The weigh box and scales shall conform to the requirements of the Item, "Weighing and Measuring Equipment."

Asphaltic Material Bucket and Scales. The asphaltic material bucket and scales shall be of sufficient capacity to hold and weigh the necessary asphaltic material for one batch. If the material is measured by weight, the

bucket and scales shall conform to the requirements of the Item, "Weighing and Measuring Equipment." If a pressure type flow meter is used to measure the asphaltic material, the requirements of the Item, "Weighing and Measuring Equipment", shall apply.

Mixer. The mixer shall be of the pug mill type and shall have a capacity of not less than 3,000 pounds (of natural aggregate mixture) in a single batch, unless otherwise shown on the plans. The number and position of blades shall provide a uniform mix. The mixer shall be equipped with an approved spray bar that will distribute the asphaltic material quickly and uniformly throughout the mixer. Any mixer that segregates the mineral aggregate or fails to secure a thorough and uniform mixture with the asphaltic material shall not be used. This shall be determined by mixing the standard batch for the required time, then dumping the mixture, taking samples from its different parts and testing by Test Method Tex-210-F to show that the batch is uniform throughout. All mixers shall be provided with an automatic time lock that will lock the discharge doors of the mixer for the required mixing period. The dump door or doors and the shaft seals of the mixer shall be tight enough to prevent spilling of aggregate or mixture from the mixer.

Surge-Storage System. A surge-storage system may be used. It shall be adequate to minimize production interruptions during the normal day's operations. A device such as a gob hopper or other similar devices approved by the Engineer to prevent segregation in the surge-storage bin will be required. If the Contractor elects to use a surge-storage system, scales conforming to the requirements outlined herein will be required.

Scales. Scales may be standard platform truck scales or other equipment such as weigh hopper (suspended) scales approved by the Engineer. All scales shall conform to the Item, "Weighing and Measuring Equipment." If truck scales are used, they shall be placed at a location approved by the Engineer. If other weighing equipment is used, the Engineer may require weight checks by truck scales for the basis of approval of the equipment.

(b) Continuous Mixing Type.

Cold Aggregate Bin and Proportioning Device. Same as for weigh-batch type of plant.

Dryer. Same as for weigh-batch type of plant.

Screening and Proportioning. Same as for weigh-batch type of plant.

Hot Aggregate Bin. The hot bins shall be so constructed that oversize and overloaded material will be discarded through an overflow chute. Hot aggregate bins that become deficient in material shall activate a switch that automatically stops the plant until the proper adjustments are made.

Hot Aggregate Proportioning Device. The hot aggregate proportioning device shall be so designed that when properly operated, a uniform and continuous flow of aggregate into the mixer will be maintained.

Asphaltic Material Spray Bar. The asphaltic material spray bar shall be so designed that the asphalt will spray uniformly and continuously into the mixer.

Asphaltic Material Meter. An asphaltic material recording meter meeting the requirements of the Item, "Weighing and Measuring Equipment," shall be placed in the asphalt line leading to the spray bar so that the cumulative amount of asphalt used can be accurately determined. Provisions of a permanent nature shall be made for checking the accuracy of the meter output. The asphalt meter and line to the meter shall be protected with a jacket of hot oil or other approved means to maintain the temperature of the line and meter at or near that temperature specified for the asphaltic material. Unless otherwise shown on the plans, the temperature of the asphaltic material entering the recording meter shall be maintained at ±10 F of the temperature at which the asphalt metering pump was calibrated and set. Inability to maintain this tolerance in temperature shall result in an adjustment of the pay quantity for the asphaltic material.

If a pressure type flow meter is used to measure the asphaltic material, the requirements of the Item, "Weighing and Measuring Equipment", shall apply.

Mixer. The mixer shall be of the pug mill continuous type and shall have a capacity of not less than 40 tons of mixture per hour. Any mixer that has a tendency to segregate the aggregate or fails to secure a thorough and uniform mixing of the aggregate with the asphaltic material shall not be used. The dam gate at the discharge end of the pug mixer and/or pitch of the mixing paddles shall be so adjusted to maintain a level of mixture in the pug mixer between the shaft and the lower paddle tip (except at the discharge end).

Surge-Storage System. A surge-storage system may be used. It shall be adequate to minimize production interruptions during the normal day's operations. A device such as a gob hopper or other similar devices approved by the Engineer to prevent segregation in the surge-storage bin will be required. If the Contractor elects to use a surge-storage system, scales conforming to the requirements outlined herein will be required.

Scales. Scales may be standard platform truck scales or other equipment such as weigh hopper (suspended) scales approved by the Engineer. All scales shall conform to the Item, "Weighing and Measuring Equipment". If truck scales are used, they shall be placed at a location approved by the Engineer. If other weighing equipment is used, the Engineer may require weight checks by truck scales for the basis of approval of the equipment.

(c) **Drum Mix Plant.** Unless otherwise shown on the plans, the Contractor may, at his option, elect to use the drum mixing process in the mixing of asphalt stabilized base material. The plant shall be adequately designed and constructed for the process of mixing aggregates and asphalt in the dryer-drum without preheating the aggregates. The plant shall be equipped with satisfactory conveyors, power units, aggregate handling equipment and feed controls and shall consist of the following essential pieces of equipment.

Cold Aggregate Bin and Feed System. The number of compartments in the cold aggregate bin shall be equal to or greater than the number of stockpiles of individual materials to be used.

The bin shall be of sufficient size to store the amount of aggregate required to keep the plant in continuous operation and of proper design to prevent overflow of material of one bin to that of another bin. The feed system shall provide a uniform and continuous flow of aggregate in the desired proportion to the dryer. Each aggregate shall be proportioned in a separate compartment with total and proportional control.

The system shall provide positive weight measurement of the combined cold-aggregate feed by use of belt scales or other approved devices. Provisions of a permanent nature shall be made for checking the accuracy of the measuring device as required by the Item, "Weighing and Measuring Equipment". When a belt scale is used, mixture production shall be maintained so that the scale normally operates between 50 percent and 100 percent of its rated capacity. Belt scale operation below 50 percent of the rated capacity may be allowed by the Engineer if accuracy checks show the scale to meet the requirements of the Item, "Weighing and Measuring Equipment", at the selected rate and it can be satisfactorily demonstrated to the Engineer that mixture uniformity and quality have not been adversely affected.

Scalping Screen. A scalping screen shall be required, unless otherwise shown on the plans, and shall be located ahead of any weighing device.

Asphaltic Material Measuring System. An asphaltic material measuring device meeting the requirements of the Item, "Weighing and Measuring Equipment,"shall be placed in the asphalt line leading to the dryer-drum mixer so that the cumulative amount of asphalt used can be accurately determined. Provisions of a permanent nature shall be made for checking the accuracy of the measuring device output. The asphalt measuring device and line to the measuring device shall be protected with a jacket of hot oil or other approved means to maintain the temperature of the line and measuring device near that temperature specified for the asphaltic material. Unless otherwise shown on the plans, the temperature of the

asphaltic material entering the measuring device shall be maintained at ±10 F of the temperature at which the asphalt measuring device was calibrated and set.

If a pressure type flow meter is used to measure the asphaltic material, the requirements of the Item, "Weighing and Measuring Equipment", shall apply.

Synchronization Equipment for Feed Control System. The asphaltic material feed control shall be coupled with the total aggregate weight measurement device in such manner as to automatically vary the asphalt feed rate as required to maintain the required proportion.

Drum Mix System. The drum mixing system shall be of the type that continually agitates the aggregate and asphalt mixture during heating and in which the temperature can be so controlled that aggregate and asphalt will not be damaged in the necessary drying and heating operations required to obtain a mixture of the specified temperature. A continuously-recording thermometer shall be provided which will indicate the temperature of the mixture as it leaves the drum mixer.

Surge Storage System. A surge storage system will be required. It shall be adequate to minimize the production interruptions during the normal day's operations and shall be so constructed to minimize segregation. A device such as a gob hopper or other similar device approved by the Engineer to prevent segregation in the surge-storage bin will be required.

Scales. Scales may be standard platform truck scales, belt scales or other equipment such as weigh hopper (suspended) scales approved by the Engineer. All scales shall conform to the Item, "Weighing and Measuring Equipment." If truck scales are used, they shall be placed at a location approved by the Engineer. If other weighing equipment is used, the Engineer may require weight checks by truck scales for the basis of approval of the equipment.

(3) **Asphaltic Material Heating Equipment.** Asphaltic material heating equipment shall be adequate to heat the amount of asphaltic material required to the desired temperature. Asphaltic material may be heated by steam coils which shall be absolutely tight. Direct fire heating of asphaltic materials will be permitted, provided the heater used maintains a positive circulation of the asphalt throughout the heater without damage to the asphalt. Agitation with steam or air will not be permitted. The heating apparatus shall be equipped with a recording thermometer with a 24-hour chart that will record the temperature of the asphaltic material at the highest temperature.

(4) **Spreading and Finishing Machine.** The spreading and finishing machine shall be of a type approved by the Engineer, shall be capable of producing a surface that will meet the requirements of the typical cross sec-

tion and the surface test, when required, and when the mixture is dumped directly into the finishing machine shall have adequate power to propel the delivery vehicles in a satisfactory manner. The finishing machine shall be equipped with a flexible spring and/or hydraulic type hitch sufficient in design and capability to maintain contact between the rear wheels of the hauling equipment and the pusher rollers of the finishing machine while the mixture is being unloaded.

The use of any vehicle which requires dumping directly into the finishing machine and which the finishing machine cannot push or propel in such a manner as to obtain the desired lines and grades without resorting to hand finishing will not be allowed. Vehicles dumping directly or indirectly into the finishing machine shall be so designed and equipped that unloading into the finishing machine can be mechanically and/or automatically operated in such a manner that overloading the finishing machine being used cannot occur and the required lines and grades will be obtained without resorting to hand finishing.

Unless otherwise shown on the plans, dumping of the asphaltic mixture in a windrow and then placing the mixture in the finishing machine with loading equipment will be permitted provided that the loading equipment is constructed and operated in such manner that substantially all of the mixture deposited on the roadbed is picked up and loaded in the finishing machine without contamination by foreign material of the mixture and excessive temperature loss is not encountered. The loading equipment will be so designed and operated that the finishing machine being loaded will obtain the required line, grade and surface without resorting to hand finishing. Any operation of the loading equipment resulting in the accumulation and subsequent shedding of this accumulated material into the asphaltic mixture will not be permitted.

Automatic screed controls, if required, shall meet the requirements of the Item, "Automatic Screed Controls for Asphaltic Concrete Spreading and Finishing Machines."

(5) **Motor Grader.** The motor grader, if used, shall be a self-propelled power motor grader. It shall be equipped with smooth tread pneumatic tired wheels, have a blade length of not less than 12 feet and have a wheelbase of not less than 16 feet.

(6) **Rollers.** It shall be the responsibility of the Contractor to have rolling equipment available on the job to properly compact the paving mixture in place as required without delay to the laydown operation. Rollers provided shall meet the qualifications for their type as follows:

(a) **Pneumatic Tire Rollers.** The rollers shall be acceptable medium pneumatic tire rollers conforming to the requirements of the Item, "Rolling (Pneumatic Tires)", Type B, unless otherwise specified on the plans.

(b) Two Axle Tandem Roller. This roller shall be an acceptable power driven tandem roller weighing not less than 8 tons.

(c) Three Wheel Roller. This roller shall be an acceptable power driven three wheel roller weighing not less than 10 tons.

(d) Three Axle Tandem Roller. This roller shall be an acceptable power driven three axle roller weighing not less than 10 tons.

(e) Trench Roller. This roller shall be an acceptable power-driven trench roller equipped with sprinkler for keeping the wheels wet and adjustable road wheel so that the roller may be kept level during rolling. The drive wheel shall be not less than 20 inches wide. The roller under working conditions shall produce 325 pounds per linear inch of roller width and be so geared that a speed of 1.8 miles per hour is obtained in low gear.

(f) Vibratory Steel-Wheel Roller. This roller shall have a minimum weight of 6 tons. The compactor shall be equipped with amplitude and frequency controls and specifically designed to compact the material on which it is used, and shall be operated in accordance with the manufacturer's recommendations or as directed by the Engineer.

(7) Straightedges and Templates. When directed by the Engineer, the Contractor shall provide acceptable 10-foot straightedges for surface testing. Satisfactory templates shall be provided as required by the Engineer.

(8) Alternate Equipment. When permitted by the Engineer in writing, equipment other than that specified which will consistently produce satisfactory results may be used.

(9) Inspection. It will be the Contractor's responsibility to provide safe and accurate means to enable inspection forces to take all required samples, and to provide permanent means for checking the output of any specified metering device and to perform the calibration checks as required by the Engineer.

292.5. Stockpiling, Storage, Proportioning and Mixing.

(1) Stockpiling of Aggregates. Prior to mixing operations with asphaltic material, processed mineral aggregate shall be stockpiled on an area previously cleared of trash, weeds and grass and smoothed as directed by the Engineer. The aggregate stockpiles shall be not less than 10 feet in height and constructed in layers not exceeding 18 inches in depth or as directed by the Engineer. The plant shall have and maintain at least a two-day supply of aggregates on hand, unless otherwise directed by the Engineer. Material shall be stockpiled in such a manner as to prevent segregation of aggregate and mixing of aggregates from stockpiles and/or sources. More than one stockpile will be permitted unless otherwise shown on plans. The gradation requirements for the individual stockpiles and proportioning from these stockpiles will be the Contractor's responsibility as approved by the Engineer.

(2) **Storage and Heating of Asphaltic Materials.** The asphaltic material storage shall be ample to meet the requirements of the plant. Asphalt shall not be heated to a temperature in excess of that specified in the Item, "Asphalts, Oils and Emulsions". All equipment used in the storage and handling of asphaltic material shall be kept in a clean condition at all times and shall be operated in such manner that there will be no contamination with foreign matter.

(3) **Feeding and Drying of Aggregate.** The feeding of various sizes of aggregate to the dryer shall be done through the cold aggregate bin and proportioning device in such a manner that a uniform and constant flow of materials in the required proportions will be maintained. The aggregate shall be dried and heated to the temperature necessary to produce a mixture having the specified temperature. In no case shall the aggregate be introduced into the mixing unit at a temperature more than 400 F.

(4) **Proportioning.** The proportioning of the various materials entering the asphaltic mixture shall be the responsibility of the Contractor as approved by the Engineer and in accordance with these specifications. The asphaltic material and aggregates may be proportioned by weight or by volume based on weight using the specified equipment.

(5) **Mixing.**

(a) **Weigh-Batch Type Mixer.** In the charging of the weigh box and in the charging of the mixer from the weigh box such methods or devices shall be used as are necessary to secure a uniform asphalt mixture. In introducing the batch into the mixer, all mineral aggregate shall be introduced first and shall be mixed thoroughly for a period of 5 to 20 seconds, as directed, to uniformly distribute the various sizes throughout the batch before the asphaltic material is added. The asphaltic material shall then be added and the mixing continued for a total mixing period of not less than 30 seconds. This mixing period may be increased, if in the opinion of the Engineer, the mixture is not uniform. The differential in temperature of the aggregates and the asphalt as they enter the pug mixer shall not exceed 25 F.

Temporary storing or holding of the asphaltic mixture by the surge-storage system may be used during the normal day's operation. Overnight storage will not be permitted unless authorized in the plans or in writing by the Engineer. The mixture coming out of the surge-storage bin must be of equal quality to that coming out of the mixer.

(b) **Continuous-Type Mixer.** The amount of aggregate and asphaltic material entering the mixer and the rate of travel through the mixer shall be so coordinated that a uniform mixture of the specified grading and asphalt content will be produced. The differential in temperature of the aggregates and the asphalt as they enter the pug mixer shall not exceed 25 F.

Checks on asphalt used shall be made at least twice daily by comparing the asphalt used in ten loads of completed mix as shown on the asphalt recording meter and the design amount for these ten loads. The acceptable percent of variation between the asphalt used and the design amount will be as shown on the plans or as determined by the Engineer.

Temporary storing or holding of the asphaltic mixture by the surge-storage system may be used during the normal day's operation. Overnight storage will not be permitted unless authorized in the plans or in writing by the Engineer. The mixture coming out of the surge-storage bin must be of equal quality to that coming out of the mixer.

(c) **Drum-mix Plant.** The amount of aggregate and asphaltic material entering the mixer and the rate of travel through the mixing unit shall be so coordinated that a uniform mixture of the specified grading and asphalt content will be produced.

Temporary storing or holding of the asphaltic mixture by the surge-storage system will be required during the normal day's operation. Overnight storage will not be permitted unless authorized in the plans or in writing by the Engineer. The mixture coming out of the surge-storage-bin must be of equal quality to that coming out of the mixer. The mixture, when discharged from the plant, shall have a moisture content not greater than 1 percent by weight unless otherwise shown on the plans and/or specified by the Engineer. The moisture content shall be determined in accordance with Test Method Tex-212-F, Part II.

(d) The mixture produced from each type of mixer shall not vary from the specified mixture by more than the tolerances herein specified.

(e) The asphaltic mixture from each type of mixer shall be at a temperature between 225 F and 350 F when discharged from the mixer. The Engineer will approve the temperature within the above limitations, and the mixture when discharged from the mixer shall not vary from this selected temperature more than 25 F.

292.6. Construction Methods. It shall be the responsibility of the Contractor to produce, transport, place and compact the specified mixture in accordance with these specifications and as approved by the Engineer.

The asphaltic mixture, when placed with a spreading and finishing machine shall not be placed when the air temperature is below 50 F and is falling, but it may be placed when the air temperature is above 40 F and is rising. The mixture when placed with a motor grader shall not be placed when the air temperature is below 60 F and is falling, but may be placed when the air temperature is above 50 F and is rising. The air temperature shall be taken in the shade away from artificial heat. It is further provided that the prime coat, tack coat or asphalt stabilized base shall be placed only

when the humidity, general weather conditions and temperature and moisture conditions of the subbase or subgrade, in the opinion of the Engineer, are suitable.

If, after being discharged from the mixer and prior to placing, the temperature of the asphaltic mixture is 50 F or more below the temperature approved by the Engineer, all or any part of the load may be rejected and payment will not be made for the rejected material.

(1) **Prime Coat.** If a prime coat is required, it shall be applied and paid for as a separate item conforming to the requirements of the Item, "Prime Coat" except the air temperature for application shall be as provided above for asphaltic mixture to be laid by a spreading and finishing machine. The tack coat or asphalt stabilized base shall not be applied on a previously primed course until the prime coat has completely cured to the satisfaction of the Engineer.

(2) **Tack Coat.** Before the asphaltic mixture is laid, the surface upon which the tack coat is to be placed shall be cleaned thoroughly to the satisfaction of the Engineer. The surface shall be given a uniform application of tack coat using asphaltic materials of this specification. This tack coat shall be applied, as directed by the Engineer, with an approved sprayer at a rate not to exceed 0.10 gallon per square yard of surface. Where the mixture will adhere to the surface on which it is to be placed without the use of a tack coat, the tack coat may be eliminated by the Engineer. All contact surfaces of curbs and structures and all joints shall be painted with a thin uniform coat of the asphaltic material meeting the requirements for tack coat. The tack coat shall be rolled with a pneumatic tire roller when directed by the Engineer.

(3) **Transporting.** The asphaltic mixture, prepared as specified above shall be hauled to the work in tight vehicles previously cleaned of all foreign material. The dispatching of the vehicles shall be arranged so that all material delivered may be placed, and all rolling shall be completed during daylight hours. The inside of the truck body may be given a light coat of oil, lime slurry or other material satisfactory to the Engineer, if necessary, to prevent mixture from adhering to the body. In cool weather or for long hauls, canvas covers and insulating of truck bodies may be required.

(4) **Placing.**

(a) Generally, the asphaltic mixture shall be dumped and spread on the approved prepared surface with the specified spreading and finishing machine, in such a manner that when properly compacted, the finished course will be smooth, of uniform density, and will conform with the typical sections shown on the plans and to the lines and grades established by the Engineer. During the application of asphaltic material, care shall be taken to prevent splattering of adjacent pavement, curb and gutter and structures.

(b) The mixture shall be spread and compacted in layers or lifts as specified on the plans or as directed by the Engineer. The sequence of compacting shall be such that undue displacement of the edge of the course does not occur. On deep lifts, the edge of the course may be rolled with a motor grader wheel or similar equipment or supported by blading a roll of earth against the edge of the course prior to compacting the surface.

(c) When the asphaltic mixture is placed in a narrow strip along the edge of an existing pavement, or used to level up small areas of an existing pavement or placed in small irregular areas where the use of a finishing machine is not practical, the finishing machine may be eliminated when authorized by the Engineer, provided a satisfactory surface can be obtained by other approved methods.

(5) **Compacting.**

(a) As directed by the Engineer, the asphalt stabilized base shall be compacted thoroughly and uniformly with the specified rollers. In lieu of the rolling equipment specified, the Contractor may, upon written permission from the Engineer, operate other compacting equipment that will produce equivalent relative compaction as the specified equipment. If the substituted compaction equipment fails to produce the desired compaction as would be expected of the specified equipment, as determined by the Engineer, its use shall be discontinued. When directed by the Engineer, the initial compaction shall be accomplished with the pneumatic tire roller.

(b) When rolling with the three wheel, tandem, or vibratory rollers, rolling shall start longitudinally at the sides and proceed toward the center of the pavement, overlapping on successive trips by at least half the width of the rear wheel unless otherwise directed by the Engineer. Alternate trips of the roller shall be slightly different in length. On super-elevated curves, rolling shall begin at the low side and progress toward the high side unless otherwise directed by the Engineer. When rolling with vibratory steel-wheel rollers, the manufacturer's recommendation shall be followed unless directed otherwise by the Engineer. Rolling with pneumatic-tire roller shall be done as directed by the Engineer. Rolling shall be continued until no further increase in density can be obtained and all roller marks are eliminated. The motion of the roller shall be slow enough at all times to avoid displacement of the mixture. If any displacement occurs, it shall be corrected at once by the use of a rake, and of fresh mixtures where required. The roller shall not be allowed to stand on any portion of the mixture pavement which has not been fully compacted. To prevent adhesion of the mixture to the roller, the wheels shall be kept thoroughly moistened with water, but an excess of water will not be permitted. All rollers must be in good mechanical condition. Necessary precautions shall be taken to prevent the dropping of gasoline, oil, grease or other foreign matter on the roadway, either when the rollers are in operation or when standing.

(c) **Hand Tamping.** The edges of the pavement along curbs, headers and similar structures, and all places not accessible to the roller, or in such positions as will not allow thorough compaction with the rollers, shall be thoroughly compacted with lightly oiled tamps.

(6) **Surface Finish.** The compacted material shall conform to the typical cross sections, lines and grades as shown on plans and directed by the Engineer and shall have a smooth surface with a reasonably uniform texture acceptable to the Engineer. Unacceptable finished surfaces may be corrected by the placement of additional mixture, all at the expense of the Contractor.

(7) **Protection of the Work and Opening to Traffic.** The completed asphalt stabilized base course shall be opened to traffic as provided by the plans and as directed by the Engineer. All construction traffic allowed on the base course shall comply with the State laws governing traffic on highways unless otherwise authorized by the Engineer. When another roadway surface is provided for the traveling public and construction traffic through the project, the Engineer may prohibit traffic on the completed base course.

292.7. **In Place Density.** When in-place density is required, it is the intent of this specification that the material be placed and compacted to 96 percent of the maximum molded gyrated density as determined by Test Method Tex-126-E or as specified on the plans. The maximum molded gyrated density shall be determined from material sampled from the mixing plant and molded in accordance with Test Method Tex-126-E. Procedures and methods outlined in Test Method Tex-126-E shall also be used in determining the in-place density unless determined otherwise by the Engineer. The field specimens utilized for the in-place density testing may be either cores or sections of asphalt stabilized base tested according to Test Method Tex-207-F. Other methods of determining in-place density which correlate satisfactorily with those results obtained through use of Test Method Tex-126-E may be used. In-place density tests are intended for control tests. If the in-place density of the mixture produced has a value lower than that specified and in the opinion of the Engineer is not due to a change in the quality of the material, production may proceed with subsequent changes in the mix and/or construction operations until the in-place density equals or exceeds the specified density. Requirements specifying air temperature limitations for placing and types of rollers to be furnished are not applicable when in-place density is specified. Regardless of the method of compaction control followed, all rolling shall be completed before the mixture temperature drops below 175 F.

292.8. **Measurement.** Asphalt stabilized base will be measured by the discrete weight, or composite weight method.

Discrete Weight Method. Asphalt stabilized base will be measured separately by the ton of 2000 pounds of "Asphalt" and "Aggregate" of the type actually used in the completed work in accordance with the plans and

specifications for the project. Measurement, if mixing is done by a continuous mixer or drum mixer, will be made on scales as specified herein. Measurement, if batched by weight, may be made on the batch scales and records of the number of batches, batch designs and weight of "Asphalt" and "Aggregate" shall be kept. Where surge-storage is used, measurement of material taken from the surge-storage bin will be made on truck scales or suspended hopper scales.

Composite Weight Method. Asphalt stabilized base will be measured by the ton of 2000 pounds of the composite "Asphalt Stabilized Base" of the type actually used in the completed and accepted work in accordance with the plans and specifications for the project. The composite asphalt stabilized base is hereby defined as the asphalt, aggregate, additives as noted in the plans and/or approved by the Engineer, and any residual moisture which is not designated to be deducted. Measurement, if mixing is done by a continuous mixer or drum mixer, will be made on scales as specified herein. Measurement, if batched by weight, may be made on the batch scales and records of the number of batches, batch design and weight of the composite asphalt stabilized base shall be kept. Where surge-storage is used, measurement of material taken from the surge-storage bin will be on truck scales or suspended hopper scales.

292.9. Payment.

(1) The work performed and materials furnished as prescribed by this Item and measured as provided under "Measurement" will be paid for at the unit prices bid for the items and types specified:

Measurement Method	Bid Item	Unit of Measure
Discrete Weight	Asphalt	Ton
	Aggregate	Ton
Composite Weight	Asphalt Stabilized Base	Ton

The unit bid price shall be full compensation for quarrying, furnishing all materials, including royalty payments or mineral aggregates, where applicable, all stripping unless specifically stated otherwise on the plans, freight involved; for all heating, mixing, hauling, cleaning the existing base course or pavement, tack coat, placing asphalt stabilized base mixture, rolling and finishing; and for all manipulations, labor, tools, equipment and incidentals necessary to complete the work except prime coat when required.

(2) **The prime coat**, applied where required, will be measured and paid for in accordance with the provisions governing the Item, "Prime Coat".

(3) **All templates**, straightedges, scales and other weighing and measuring devices necessary for the proper construction, measuring and checking of the work shall be furnished, operated and maintained by the Contractor at his expense.

ITEM 300

ASPHALTS, OILS AND EMULSIONS

300.1. Description. This Item establishes the requirements for oil asphalts, cutback asphalts, emulsified asphalts, asphalt cement, other miscellaneous asphaltic materials and latex additives.

300.2. Materials. When tested according to State Department of Highways and Public Transportation Test Methods, the various materials shall meet the applicable requirements of this specification.

(1) **Asphalt Cement.** The material shall be homogeneous, shall be free from water, shall not foam when heated to 347 F and shall meet the following requirements:

VISCOSITY GRADE

Properties	AC-1.5		AC-3		AC-5		AC-10		AC-20		AC-40	
	Min	Max	Min	Max	Min	Max	Min	Max	Min	Max	Min	Max
Viscosity, 140 F stokes	150 ± 50		300 ± 100		500 ± 100		1000 ± 200		2000 ± 400		4000 ± 800	
Viscosity, 275 F stokes	0.7	—	1.1	—	1.4	—	1.9	—	2.5	—	3.5	—
Penetration, 77 F, 100g, 5 sec	250	—	210	—	135	—	85	—	55	—	35	—
Flash Point, C.O.C., F	425	—	425	—	425	—	450	—	450	—	450	—
Solubility in trichloroethylene, percent	99.0	—	99.0	—	99.0	—	99.0	—	99.0	—	99.0	—
Tests on residues from thin film oven test:												
Viscosity, 140 F stokes	—	450	—	900	—	1500		3000	—	6000	—	12000
Ductility, 77 F, 5 cms per min, cms	100	—	100	—	100	—	70	—	50	—	30	—
Spot test	Negative for all grades											

(2) **Oil Asphalt.** The material shall be homogeneous, free from water, shall not foam when heated to 347 F and shall meet the following requirements:

Properties	OA - 30	
	Min	Max
Penetration at 32 F, 200 g, 60 sec	15	—
Penetration at 77 F, 100 g, 5 sec	25	35
Penetration at 115 F, 50 g, 5 sec	—	65
Ductility at 77 F, 5 cm/min, cm	2	—
Flash Point, C.O.C., F	450	—
Softening Point, R. & B., F	185	—
Percent Weight Loss, Thin Film Oven Test	—	0.4
Solubility in Trichloroethylene, %	99.0	—
Spot Test	Negative	

(3) **Latex Additive.** A minimum of two percent by weight latex additive (solids basis) shall be added to AC-3 or AC-5 asphalt when specified on the plans or in other specifications in the contract. The latex additive shall be governed by the following specifications:

The latex is to be an anionic emulsion of butadiene-styrene low-temperature copolymer in water, stablized with fatty-acid soap so as to have good storage stability, and possessing the following properties:

Monomer ratio, B/S	70/30
Minimum solids content	67%
Solids content per gal @ 67%	5.3 lbs
Coagulum on 80-mesh screen	0.1%max
Type Anti-oxidant	staining
Mooney Viscosity of Polymer (M/L 4 @ 212 F)	100 min
pH of Latex	9.4 - 10.5
Surface tension	28-42 dynes/cm^2
Brookfield Viscosity of Latex	1200 ps max @ 67% solids

The finished latex-asphalt shall meet the following requirements:

Viscosity at 140 F, stokes	1500 max
Ductility at 39.2 F, 1 cm per min, cm	100 min

(4) **Cutback Asphalt.** The material shall meet the requirements shown in the following table:

RAPID CURING TYPE CUTBACK ASPHALT

Type Grade	RC-250		RC-800		RC-3000	
Properties	**Min.**	**Max.**	**Min.**	**Max.**	**Min.**	**Max.**
Water, percent	—	0.2	—	0.2	—	0.2
Flash Point, T.O.C., F	80	—	80	—	80	—
Kinematic vis. @ 140 F, cst	250	400	800	1600	3000	6000
Distillation Test:						
Distillate, percentage by volume of total distillate to 680 F						
to 437 F	40	75	35	70	20	55
to 500 F	65	90	55	85	45	75
to 600 F	85	—	80	—	70	—
Residue from Distillation						
Volume %	70	–	75	—	82	—
Tests on Distillation Residue						
Penetration, 100g, 5 sec., 77 F	100	150	100	150	100	150
Ductility, 5 cm/min., 77 F, cm	100	—	100	—	100	—
Solubility in						
tricholoroethylene, %	99.0	—	99.0	—	99.0	—
Spot Test	ALL NEGATIVE					

MEDIUM CURING TYPE CUTBACK ASPHALT

Type — Grade	MC-30		MC-70		MC-250		MC-800		MC-3000	
Properties	**Min**	**Max**	**Min**	**Max**	**Min**	**Max**	**Min**	**Max**	**Min**	**Max**
Water, %	—	0.2	—	0.2	—	0.2	—	0.2	—	0.2
Flash Point, T.O.C., F	100	—	100	—	150	—	150	—	150	—
Kinematic vis. @ 140 F, cst	30	60	70	140	250	500	800	1600	3000	6000
The Distillate, expressed as percent by volume of total distillate to 680 F, shall be as follows:										
Off at 437 F	—	25	—	20	—	10	—	—	—	
Off at 500 F	40	70	20	60	15	55	·	35	—	15
Off at 600 F	75	93	65	90	60	87	45	80	15	75
Residue from 680 F Distillation, Volume %	50	—	55	—	67	—	75	—	80	—
Tests on Distillation Residue:										
Penetration at 77 F, 100g, 5 sec.	120	250	120	250	120	250	120	250	120	250
Ductility at 77 F, 5 cm/min., cms	100*	—	100*	—	100*	—	100*	—	100*	—
Solubility in tricholoroethylene, %	99.0	—	99.0	—	99.0	—	99.0		99.0	—
Spot Test	Neg.		Neg.		Neg.		Neg.		Neg.	

*If penetration of residue is more than 200 and ductility at 77 F is less than 100 cm, the material will be acceptable if its ductility at 60 F is more than 100.

(5) **Cracked Fuel Oil.** This material shall meet the following requirements:

Properties	Minimum	Maximum
Asphalt content of 100 Penetration @ 77 F, %	65	80
Flash Point, C.O.C., F	250	
Kinematic Viscosity at 140 F, cst		550
Loss at 212 F, 20 g., 5 hrs. %		3.0
Water and Sediment, %		2.0

(6) **Emulsions.** The material shall be homogeneous. It shall show no separation of asphalt after thorough mixing and shall meet the viscosity requirements at any time within 30 days after delivery.

ANIONIC EMULSIONS

TYPE	Rapid Setting				Medium Setting						Slow Setting	
GRADE	RS-2		RS-2h		MS-2		MS-2h		MS-1		SS-1	
Properties	Min	Max	Min	Max	Min	Max	Min	Max	Min	Max	Min	Max
Furol Viscosity at 77 F, sec	—	—		—	—	—	—	—	30	100	30	100
Furol Viscosity at 122 F, sec	150	400	150	400	100	300	100	300		—	—	-
Residue by Distillation, %	65	—	65	—	65		65	—	60	—	60	
Oil Portion of Distillate, %	—	2	—	2		2	—	2	-	2	—	2
Sieve Test, %	—	0.1	—	0.1	—	0.1	—	0.1		0.1	—	0.1
Miscibility (Standard Test)	—	—	—	—	-	—	—	-	Passing		Passing	
Coating	—		—	—	—	-	—	—	Passing		—	-
Cement Mixing, %	—	—	—	—	—		—	—	—		—	2.0
Demulsibility 50 cc of N/10 $CaCl_2$, %	—		—	—	—	—	—	—		70	—	
Demulsibility 35 cc of N/50 $CaCl_2$, %	60	—	60		—	30	-	30	—	—		—
Storage Stability, 1 day, %	—	1		1	—	1	—	1		1	—	1
Freezing Test, 3 Cycles *	—		—	—	Passing		Passing		Passing		Passing	
Tests on Residue: Penetration at 77 F, 100 g, 5 sec	120	160	80	110	120	160	80	110	120	160	120	160
Solubility in Trichloroethylene, %	97.5	—	97.5	—	97.5	—	97.5	-	97.5	--	97.5	—
Ductility at 77 F, 5 cm/min, cms	100		100	—	100	—	100	—	100	—	100	-

* Applies only when Engineer designates material for winter use.

HIGH FLOAT EMULSIONS

TYPE	Rapid Setting		Medium Setting	
GRADE	HFRS-2		AES-300	
Properties	Min.	Max.	Min.	Max.
Furol Viscosity at 77 F, sec		—	75	400
Furol Viscosity at 122 F, sec	150	400		—
Residue by Distillation, %	65		65	—
Oil Portion of Distillate, %	—	2	—	7
Sieve Test, %	—	0.1	—	0.1
Coating	—	—	Passing	
Demulsibility 35 cc of N/50 $CaCl_2$, %	50	—		—
Storage Stability Test, 1 day, %		1		1
Tests on Residue:				
Penetration at 77 F, 100 g, 5 sec	100	140	300	—
Solubility in Trichloroethylene, %	97.5	—	97.5	—
Ductility at 77 F, 5 cm/min, cms	100		—	—
Float Test at 140 F, sec	1200		1200	

CATIONIC EUMLSIONS

TYPE	Rapid Setting				Medium Setting				Slow Setting			
GRADE	CRS-2		CRS-2h		CMS-2		CMS-2h		CSS-1		CSS-1h	
Properties	Min	Max	Min	Max	Min	Max	Min	Max	Min	Max	Min	Max
Viscosity, Saybolt Furol at 77 F, sec		—	—	—	—	—	—	—	20	100	20	100
Viscosity, Saybolt Furol at 122 F, sec	150	400	150	400	100	300	100	300	—	—		—
Storage stability test, 1 day, %	—	1	—	1	—	1	—	1	—	1	—	1
Demulsibility*, 35 ml 0.8 percent sodium dioctyl sulfo-succinate, %	40	—	40	—	—	—	—	—	—		—	—
Coating, ability and water residence:												
Coating, dry aggregate	—	—	—	—	good		good		—		—	—
Coating, after spraying		—	—	—	fair		fair		—		—	—
Coating, wet aggregate		—	—	—	fair		fair		—		—	—
Coating, after spraying		—	—	—	fair		fair		—	—		—
Particle charge test	positive		positive		positive		positive		positive		positive	
Sieve Test, %	—	0.10	—	0.10	—	0.10	—	0.10	—	0.10	—	0.10
Cement mixing test, %	—	—	—	—		—	—	—	—	2.0		2.0
Distillation:												
Oil distillate, by volume of emulsion, %	—	3	—	3	—	12	—	12	—	3	—	3
Residue, percent	65	—	65	—	65	—	65	—	60		60	—
Tests on Residue from Distillation Test:												
Penetration, 77 F, 100g, 5 sec	120	160	80	110	120	200	80	110	120	160	80	110
Ductility, 77 F, 5 cm/min., cm	100	—	100		100	—	100	—	100	—	100	—
Solubility in trichloroethylene, %	97.5	—	97.5	—	97.5	—	97.5	—	97.5	—	97.5	—

* Demulsibility test shall be made within 30 days from date of shipment.

(7) **Fluxing Material.** Fluxing material shall be free from foreign matter and shall meet the following requirements:

Properties	Fluxing Material Min	Fluxing Material Max
Water, %	—	0.2
Kinematic Viscosity, 140F, cst	60	120
Flash Point, C.O.C., F	250	—
Loss on Heating, 50g, 5 hrs at 325 F, %	—	5
Asphalt Content of 85 to 115 Penetration by vacuum distillation, weight %	25	—
Pour Point, F	—	60

(8) **Precoat Material.** Precoat material may consist of any one of the various types of asphaltic materials listed in this specification, approved by the Engineer, including "Special Precoat Material".

Properties	Special Precoat Material Min	Special Precoat Material Max
Water, %	—	0.2
Flash, C.O.C., F	200	—
Kinematic Viscosity at 140 F, cst	300	500
Distillation to 680 F:		
Initial Boiling Point, F	500	—
Residue by weight, %	70	—
Penetration residue, 77 F, 100 g, 5 sec	200	300

(9) **Catalytically-Blown Asphalt Joint and Crack Sealer.** Catalytically-blown asphalt shall be uniformly blended with 10 percent diatomaceous earth filler which passes the No. 325 sieve. It shall form a suitable joint and crack sealer which may be melted to pouring consistency in the regular asphalt kettle at a temperature of approximately 450 to 475 F. The material shall meet the following requirements:

GRADE	68-88 Pen		38-45 Pen	
Properties	Min	Max	Min	Max
Penetration, 77 F, 100 g, 5 sec	68	88	38	45
Penetration, 32 F, 200 g, 60 sec	38	—	—	—
Penetration, 115 F, 50 g, 5 sec	—	160	—	—
Softening Point, R. & B., F	175	200	185	200
Flash, C.O.C., F	500	—	500	—
Ductility, 77 F, 5 cm/min, cms	5	—	3	—
Flow, 140 F, cm	—	0.5	—	0.5
Ash, Weight, %	8	—	8	—
Settlement Ratio	—	1.02	—	1.02
Brittleness Test, 32 F	No Cracking		No Cracking	

300.3. Storage, Heating and Application Temperatures. Asphaltic materials should be applied at the temperature which provides proper and uniform distribution and within practical limits avoiding higher temperatures than necessary. Satisfactory application usually should be obtained within the recommended ranges shown below. No material shall be heated above the following maximum temperatures:

TYPE-GRADE	Application and Mixing: Recommended Range, F	Application and Mixing: Maximum Allowable, F	Heating and Storage Maximum, F
AC-5, 10, 20, 40	275-350	375	400
0A-30	400-500	500	500
AC-1.5 and AC-3	220-300	350	350
RC-250	125-180	200	200
RC-800	170-230	260	260
RC-3000	215-275	285	285
MC-30	70-150	175	175
MC-70	125-175	200	200
MC-250	125-210	240	240
MC-800	175-260	275	275
MC-3000	225-275	290	290
Cracked Fuel Oil	160-220	260	260
SS-1, MS-1, CSS-1, CSS-1h	50-130	140	140
RS-2, RS-2h, MS-2, MS-2h, CRS-2, CRS-2h, CMS-2, CMS-2h, HFRS-2, AES-300	110-160	170	170
Cat. Blown Asph.	425-475	500	500
Special Precoat Material	125-250	275	275
Flux Oil	—	275	275

Note: Heating of asphaltic materials (except emulsions) constitutes a fire hazard to various degrees. Proper precautions should be used in all cases and especially with RC cutbacks.

Warning to Contractors: Attention is called to the fact that asphaltic materials are very flammable. The utmost care shall be taken to prevent open flames from coming in contact with the asphaltic material or the gases of same. The Contractor shall be responsible for damage from any fires or accidents which may result from heating the asphaltic materials.

300.4. Measurement and Payment. All asphaltic materials included in this specification will be measured and paid for in accordance with the governing specifications for the items of construction in which these materials are used.

ITEM 302

AGGREGATE FOR SURFACE TREATMENTS

302.1. Description. This item establishes the requirements for aggregate to be used in the construction of surface treatments.

302.2. Materials. Aggregates shall be composed of clean, tough and durable particles of gravel, crushed gravel, crushed stone, crushed slag or natural limestone rock asphalt. When specified on the plans, other aggregate types may be permitted or required. These materials shall not contain more than 5 percent by weight of soft particles and other deleterious material as determined by Test Method Tex-217-F, Part I.

The natural limestone rock asphalt aggregate, when furnished, shall have an average bitumen content from 4 to 8 percent by weight of naturally impregnated asphalt, as determined by Test Method Tex-215-F, and shall contain not more than 2 percent by weight of any one of or combination of iron pyrites, or other objectionable matter, as determined by Test Method Tex-217-F, Part I.

No aggregate shall contain as a total of more than 5 percent by weight of impurities or objectionable matter listed above.

The percent of wear, as determined by Test Method Tex-410-A, for each of the materials shall not exceed 35 percent.

The percent of wear on natural limestone rock asphalt aggregate as determined by Test Method Tex-410-A shall be made on that portion of the material retained on the No. 4 sieve, having a naturally impregnated asphalt content of less than 1 percent.

Crushed gravel shall have a minimum of 85 percent of the particles retained on the No. 4 sieve with more than one crushed face, as determined by Test Method Tex-413-A, (Particle Count).

The polish value for the aggregate used in the surface or finish course for the travel lanes shall not be less than the value shown on the plans when tested in accordance with Test Method Test-438-A.

The flakiness index for the aggregate, as determined by Test Method Tex-224-F, shall not exceed the value shown on the plans.

302.3 Types. The various types of aggregates are identified as follows:

Type A. Type A aggregate shall consist of gravel, crushed slag, crushed stone or natural limestone rock asphalt.

Type B. Type B aggregate shall consist of crushed gravel, crushed slag, crushed stone or natural limestone rock asphalt.

Type C. Type C aggregate shall consist of gravel, crushed slag or crushed stone.

Type D. Type D aggregate shall consist of crushed gravel, crushed slag or crushed stone.

Type E. Type E aggregate shall consist of natural limestone rock asphalt.

Type F. Type F aggregate shall be as shown on the plans.

302.4. **Grades.** When tested by Test Method Tex-200-F, Part I, the gradation requirements shall be as follows:

		Percent by Weight
Grade 1:	Retained on 1″ sieve	0
	Retained on 7/8″ sieve	0 - 2
	Retained on 3/4″ sieve	20 - 35
	Retained on 5/8″ sieve	85 - 100
	Retained on 3/8″ sieve	95 - 100
	Retained on No. 10 sieve	99 - 100
Grade 2:	Retained on 7/8″ sieve	0
	Retained on 3/4″ sieve	0 - 2
	Retained on 5/8″ sieve	20 - 35
	Retained on 1/2″ sieve	85 - 100
	Retained on 3/8″ sieve	95 - 100
	Retained on No. 10 sieve	99 - 100
Grade 3:	Retained on 3/4″ sieve	0
	Retained on 5/8″ sieve	0 - 2
	Retained on 1/2″ sieve	20 - 35
	Retained on 3/8″ sieve	85 - 100
	Retained on 1/4″ sieve	95 - 100
	Retained on No. 10 sieve	99 - 100
Grade 4:	Retained on 5/8″ sieve	0
	Retained on 1/2″ sieve	0 - 2
	Retained on 3/8″ sieve	20 - 35
	Retained on No. 4 sieve	95 - 100
	Retained on No. 10 sieve	99 - 100
Grade 5:	Retained on 1/2″ sieve	0
	Retained on 3/8″ sieve	0 - 5
	Retained on No. 4 sieve	40 - 85
	Retained on No. 10 sieve	98 - 100
	Retained on No. 20 sieve	99 - 100

The aggregate shall not contain more than 1.0 percent by weight of fine dust, clay-like particles and/or silt present when tested in accordance with Test Method Tex-217-F, Part II.

302.5. **Measurement and Payment.** Aggregates will be measured and paid for in accordance with the governing specifications for the items of construction in which these materials are used.

ITEM 303

AGGREGATE FOR SURFACE TREATMENTS
(Lightweight)

303.1. **Description.** This item establishes the requirements for lightweight aggregates to be used in the construction of surface treatments.

303.2. **Materials.** Aggregates shall be composed of lightweight aggregate defined as aggregate prepared by expanding, calcining, or sintering. Lightweight materials may be furnished from more than one source.

The dry loose unit weight of lightweight aggregate shall not be less than 35 pounds per cubic foot and shall not exceed 60 pounds per cubic foot unless specified on the plans. Furthermore, a shipment of lightweight aggregate shall be rejected if the dry loose unit weight of the shipment differs by more than 6 percent from that of the sample submitted for acceptance tests from that source. Tests shall be in accordance with Test Method Tex-404-A, Part C, and shall be performed on a sample of similar gradation to that of the acceptance sample.

The percentage of wear shall not exceed 35 percent when the aggregate is tested in accordance with Test Method Tex-410-A.

The freeze-thaw loss shall not exceed 7 percent when the aggregate is tested in accordance with Test Method Tex-432-A.

The pressure slaking value shall not exceed 4 percent when the aggregate is tested in accordance with Test Method Tex-431-A.

The polish value for the aggregate used in the surface or finish course for the travel lanes shall not be less than the value shown on the plans when tested in accordance with Test Method Tex-438-A.

303.3. Grades. When tested by Test Method Tex-200-F, Part I, the gradation requirements shall be as follows:

		Percent by Weight
Grade 3:	Retained on 3/4″ sieve	0
	Retained on 5/8″ sieve	0 - 5
	Retained on 1/2″ sieve	30 - 50
	Retained on 3/8″ sieve	85 - 100
	Retained on 1/4″ sieve	95 - 100
	Retained on No. 10 sieve	98 - 100
Grade 4:	Retained on 5/8″ sieve	0
	Retained on 1/2″ sieve	0 - 5
	Retained on 3/8″ sieve	20 - 40
	Retained on No. 4 sieve	95 - 100
	Retained on No. 10 sieve	98 - 100
Grade 5:	Retained on 1/2″ sieve	0
	Retained on 3/8″ sieve	0 - 2
	Retained on No. 4 sieve	60 - 80
	Retained on No. 10 sieve	98 - 100

The aggregate shall not contain more than 1.0 percent by weight of fine dust, clay-like particles and/or silt present when tested in accordance with Test Method Tex-217-F, Part II.

303.4. Measurement and Payment. Aggregates will be measured and paid for in accordance with the governing specifications for the items of construction in which these materials are used.

ITEM 304
AGGREGATE FOR SURFACE TREATMENTS
(Precoated)

304.1. Description. This item establishes the requirements for precoated aggregate to be used in the construction of surface treatments.

304.2. Materials. Aggregates shall be composed of clean, tough and durable particles of gravel, crushed gravel, crushed stone, crushed slag or natural limestone rock asphalt. When specified on the plans, other aggregate types may be permitted or required. These materials shall not contain more than 5 percent by weight of soft particles and other deleterious material as determined by Test Method Tex-217-F, Part I.

The natural limestone rock asphalt aggregate, when furnished, shall have an average bitumen content from 4 to 8 percent by weight of naturally impregnated asphalt, as determined by Test Method Tex-215-F, and shall

contain not more than 2 percent by weight of any one of or combination of iron pyrites or other objectionable matter, as determined by Test Method Tex-217-F, Part I.

No aggregate shall contain a total of more than 5 percent by weight of impurities or objectionable matter listed above.

The percent of wear, as determined by Test Method Tex-410-A, for each of the materials shall not exceed 35 percent.

The percent of wear on natural limestone rock asphalt aggregate as determined by Test Method Tex-410-A shall be made on that portion of the material retained on the No. 4 sieve, having a naturally impregnated asphalt content of less than 1 percent.

Crushed gravel shall have a minimum of 85 percent of the particles retained on the No. 4 sieve with more than one crushed face, as determined by Test Method Tex-413-A (Particle Count).

The polish value for the aggregate used in the surface or finish course for the travel lanes shall not be less than the value shown on the plans when tested in accordance with Test Method Tex-438-A.

The flakiness index for the aggregate, as determined by Test Method Tex-224-F, shall not exceed the value shown on the plans.

The precoating material and/or fluxing material shall meet the requirements specified in the Item, "Asphalts, Oils and Emulsions".

Other materials meeting the requirements of the Item, "Asphalts, Oils and Emulsions" may be used when approved by the Engineer.

304.3. Types. The various types of precoated aggregates are identified as follows:

Type PA. Type PA shall be precoated aggregate consisting of gravel, crushed slag, crushed stone or natural limestone rock asphalt.

Type PB. Type PB shall be precoated aggregate consisting of crushed gravel, crushed slag, crushed stone or natural limestone rock asphalt.

Type PC. Type PC shall be precoated aggregate consisting of gravel, crushed slag or crushed stone.

Type PD. Type PD shall be precoated aggregate consisting of crushed gravel, crushed slag or crushed stone.

Type PE. Type PE shall be precoated aggregate consisting of natural limestone rock asphalt.

Type PF. Type PF shall be precoated aggregate as shown on the plans.

304.4. Grades. When tested by Test Method Tex-200-F, Part I, the gradation requirements shall be as follows:

		Percent by Weight
Grade 1:	Retained on 1″ sieve	0
	Retained on 7/8″ sieve	0 - 2
	Retained on 3/4″ sieve	20 - 35
	Retained on 5/8″ sieve	85 - 100
	Retained on 3/8″ sieve	95 - 100
	Retained on No. 10 sieve	99 - 100
Grade 2:	Retained on 7/8″ sieve	0
	Retained on 3/4″ sieve	0 - 2
	Retained on 5/8″ sieve	20 - 35
	Retained on 1/2″ sieve	85 - 100
	Retained on 3/8″ sieve	95 - 100
	Retained on No. 10 sieve	99 - 100
Grade 3:	Retained on 3/4″ sieve	0
	Retained on 5/8″ sieve	0 - 2
	Retained on 1/2″ sieve	20 - 35
	Retained on 3/8″ sieve	85 - 100
	Retained on 1/4″ sieve	95 - 100
	Retained on No. 10 sieve	99 - 100
Grade 4:	Retained on 5/8″ sieve	0
	Retained on 1/2″ sieve	0 - 2
	Retained on 3/8″ sieve	20 - 35
	Retained on No. 4 sieve	95 - 100
	Retained on No. 10 sieve	99 - 100
Grade 5:	Retained on 1/2″ sieve	0
	Retained on 3/8″ sieve	0 - 5
	Retained on No. 4 sieve	40 - 85
	Retained on No. 10 sieve	98 - 100
	Retained on No. 20 sieve	99 - 100

The aggregate shall not contain more than 1.0 percent by weight of fine dust, clay-like particles and/or silt present when tested in accordance with Test Method Tex-217-F, Part II.

304.5. Precoated Aggregates. Precoated aggregates shall be aggregates of the type specified, treated (coated or fluxed) with 0.5 to 2.0 percent by weight of precoat material or fluxing material meeting the requirements of this specification. The grade of aggregate specified shall meet all requirements of Article 304.4. prior to the application of the precoat material or fluxing material.

(1) **Water.** Water in an amount not to exceed 3 percent by weight of the mixture may be used in preparing the mixture. The water shall be added as directed by the Engineer during the mixing. In the event water is used in the mixing operation, adequate measuring devices shall be used and the water shall be administered to the mix through an approved spray bar.

(2) **Physical Properties of the Mixture.** The materials may be mixed on the job or at some central mixing plant and shipped ready for use. Mixes that do not remain workable a sufficient period of time or maintain flow qualities such that the precoated aggregate may be satisfactorily spread by normal approved mechanical spreading devices will not be acceptable.

Materials that are not uniformly and/or properly coated or fluxed, as determined by the Department's standard testing procedures or in the opinion of the Engineer, will not be accepted for use.

304.6. Equipment.

(1) **Mixing Plants.** Mixing plants that will not continuously meet all the requirements of this specification shall be condemned.

Mixing plants may be either the weigh-batch type, the continuous mixing type or the drum mix type. Each type of plant shall be equipped with satisfactory conveyors, power units, aggregate handling equipment, aggregate screens and bins and shall consist of the following essential pieces of equipment:

If the Engineer approves the use of emulsion as a precoat material, he may also waive the requirement for a dryer if it is demonstrated that a satisfactory coating can be obtained without drying or heating the aggregate.

(a) **Weigh-batch Type.**

Cold Aggregate Bin and Proportioning Device. The cold aggregate bins or aggregate stockpiles shall be of sufficient number and size to supply the amount of aggregate required to keep the plant in continuous operation. The proportioning device shall be such as will provide a uniform and continuous flow of aggregate in the desired proportion to the plant.

Dryer. The dryer shall be of the type that continually agitates the aggregate during heating and in which the temperature can be so controlled that aggregate will not be injured in the necessary drying and heating operations required to obtain a mixture of the specified temperature.

The burner, or combination of burners, and type of fuel used shall be such that in the process of heating the aggregate to the desired or specified temperatures, no residue from the fuel shall adhere to the heated aggregate. A recording thermometer shall be provided which will record the temperature of the aggregate when it leaves the dryer. The dryer shall be of sufficient size to keep the plant in continuous operation. The dryer will not be required for precoating natural limestone rock asphalt.

Screening and Proportioning. The screening capacity and size of the bins shall be sufficient to screen and store the amount of aggregate required to properly operate the plant and keep the plant in continuous operation at full capacity. Proper provisions shall be made to enable inspection forces to have easy and safe access to the proper location on the mixing plant where accurate representative samples of aggregate may be taken from the bins for testing.

Weighing and Measuring Equipment. The weighing and measuring equipment shall be of sufficient capacity and of adequate design for proper batching. The following equipment, conforming to the requirements of the Item, "Weighing and Measuring Equipment", shall be furnished:

1. Aggregate weigh box and batching scales.

2. Bucket and scales for precoat material or fluxing material.

A pressure type flow meter may be used to measure the precoat material or fluxing material for each batch.

Mixer. The mixer shall be of the pug mill type, and shall have a capacity of not less than 3000 pounds in a single batch. The number of blades and the position of same shall be such as to give a uniform and complete circulation of the batch in the mixer. The mixer shall be equipped with an approved spray bar that will distribute the precoat material or fluxing material quickly and uniformly throughout the mixer. Any mixer that has a tendency to segregate the mineral aggregate or fails to secure a thorough and uniform mixing with the precoat material or fluxing material shall not be used. All mixers shall be provided with an automatic time lock that will lock the discharge doors of the mixer for the required mixing period. The dump door or doors and the shaft seals of the mixer shall be tight enough to prevent the spilling of aggregate or mixture from the pug mill.

(b) Continuous Mixing Type.

Cold Aggregate Bin and Proportioning Device. Same as for weigh-batch type of plant.

Dryer. Same as for weigh-batch type of plant.

Screening and Proportioning. Same as for weigh-batch type of plant. These requirements shall also apply to materials that are stockpiled and that are proposed for direct use by a continuous mixing plant without the use of plant bins.

Aggregate Proportioning Device. The aggregate proportioning device shall be so designed that when properly operated a uniform and continuous flow of aggregate into the mixer will be maintained.

Spray Bar for Precoat Material and Fluxing Material. The spray bar for the precoat material or fluxing material shall be so designed that the material will spray uniformly and continuously into the mixer.

Meter for Precoat Material or Fluxing Material. An accurate recording meter for precoat material or fluxing material shall be placed in the line leading to the spray bar so that the accumulative amount of precoat material or fluxing material being used can be accurately determined. Provisions of a permanent nature shall be made for checking the accuracy of the meter output.

Mixer. The mixer shall be of the pug mill continuous type and shall have a capacity of not less that 40 tons of mixture per hour. Any mixer that has a tendency to segregate the aggregate or fails to secure a thorough and uniform mixing of the aggregate with the precoat material or fluxing material shall not be used.

(c) **Drum Mix Plant.** Unless otherwise shown on the plans or if natural limestone rock asphalt is to be used, the Contractor may elect to use the drum-mixing process. The plant shall be adequately designed and constructed for the process of mixing aggregates and precoat material in the dryer-drum without preheating the aggregates. The plant shall be equipped with satisfactory conveyors, power units, aggregate-handling equipment and feed controls and shall consist of the following essential pieces of equipment.

Cold Aggregate Bin and Feed System. The number of compartments in the cold aggregate bin shall be equal to or greater than the number of stockpiles of individual materials to be used.

The bin shall be of sufficient size to store the amount of aggregate required to keep the plant in continuous operation and of proper design to prevent overflow of material from one compartment to another. The feed system shall provide a uniform and continuous flow of aggregate in the desired proportion to the dryer.

The system shall provide positive weight measurement of the combined cold aggregate feed by use of belt scales or other approved devices. Provisions of a permanent nature shall be made for checking the accuracy of the measuring device as required by the Item, "Weighing and Measuring Equipment". When a belt scale is used, mixture production shall be maintained so that the scale normally operates between 50 percent and 100 percent of its rated capacity. Belt scale operation below 50 percent of the rated capacity may be allowed by the Engineer if accuracy checks show the scale to meet the requirements of the Item, "Weighing and Measuring Equipment", at the selected rate and it can be satisfactorily demonstrated to the Engineer that mixture uniformity and quality have not been adversely affected.

Scalping Screen. A scalping screen shall be required, unless otherwise shown on the plans, and shall be located ahead of any weighing device.

Precoat Material Measuring System. An asphaltic material measuring device meeting the requirements of the Item, "Weighing and Measuring Equipment", shall be placed in the line leading to the drum mixer so that the cumulative amount of precoat material used can be accurately determined. Provisions of a permanent nature shall be made for checking the accuracy of the measuring device output. The measuring device and line to the measuring device shall be protected with a jacket of hot oil or other approved means to maintain the temperature of the line and measuring device near the temperature specified for the precoat material. Unless otherwise shown on the plans the temperature of the precoat material entering the measuring device shall be maintained at ±10 F of the temperature at which the measuring device was calibrated and set.

Synchronization Equipment for Feed-Control Systems. The precoat material feed-control shall be coupled with the total aggregate weight measuring device in such manner as to automatically vary the precoat material feed rate as required to maintain the required proportion.

Drum Mix System. The drum mix system shall be of the type that continually agitates the aggregate and precoat mixture during heating and in which the temperature can be so controlled that aggregate and asphalt will not be damaged in the necessary drying and heating operations required to obtain a mixture at the specified temperature. A continuously-recording thermometer shall be provided which will indicate the temperature of the mixture as it leaves the drum mixer.

Surge-Storage System. A surge-storage system will be required. It shall be adequate to minimize the production interruptions during the normal day's operations and shall be constructed to minimize segregation. A device such as a gob hopper or other similar devices approved by the Engineer to prevent segregation in the surge-storage bin will be required.

(2) **Heating Equipment for Precoat Material and Fluxing Material.** Heating equipment for precoat material and fluxing material shall be adequate to heat the amount of material required to the desired temperature. The material may be heated by steam coils which shall be absolutely tight. Direct fire heating will be permitted, provided the heater used is manufactured by a reputable concern and there is positive circulation of the liquid throughout the heater. Agitation with steam or air will not be permitted. The heating apparatus shall be equipped with a recording thermometer with a 24-hour chart that will record the temperature of the precoat material or fluxing material where it is at the highest temperature.

304.7. Storage, Proportions and Mixing.

(1) Aggregate Storage. If the mineral aggregates are stored or stockpiled, they shall be handled in such a manner as to prevent segregation, the mixing of the various materials or sizes, and the contamination with foreign materials. The grading of aggregates proposed for use and as supplied to the mixing plant shall be uniform.

The use of limestone rock asphalt aggregate containing moisture in excess of the saturated surface-dry condition will not be permitted. Excess moisture will be evidenced by the visual surface moisture on the aggregate or any unusual quantities of fines clinging to the aggregate.

(2) Storage and Heating of Precoating Material or Fluxing Material. The precoating or fluxing material storage shall be ample to meet the requirements of the plant. The precoating material shall not be heated in storage above the maximum temperature set forth in the Item, "Asphalts, Oils and Emulsions". All equipment used in the storage and handling of precoat material or fluxing material shall be kept in a clean condition at all times and shall be operated in such manner that there will be no contamination with foreign matter.

(3) Feeding and Drying of Aggregate. The feeding of various sizes of aggregate, other than natural limestone rock asphalt, to the dryer or drum mixer shall be done through the cold aggregate bin and proportioning device in such a manner that a uniform and constant flow of material in the required proportions will be maintained. The aggregate shall be heated to the temperature necessary to produce a mixture meeting the requirements of Subarticle 304.5.(2).

(4) Proportioning. The proportioning of the various materials entering into the mixture shall be as directed by the Engineer and in accordance with these specifications. Aggregate shall be proportioned by weight using the weigh box and batching scales herein specified when the weigh-batch type of plant is used and by volume using the aggregate proportioning device when the continuous mixer type or drum mix plant is used. The precoat material or fluxing material shall be proportioned by weight or by volume based on weight using the specified equipment.

(5) Mixing.

(a) Weigh-batch Type Mixer. In the charging of the weigh box and in the charging of the mixer from the weigh box, such methods or devices shall be used as are necessary to secure a uniform mixture. In introducing the batch into the mixer, the mineral aggregate shall be introduced first; shall be mixed thoroughly, as directed, to uniformly distribute the various sizes throughout the batch before the precoat material or fluxing material is added; the precoat material or fluxing material shall then be added and

the mixing continued until such time that the aggregate is properly coated. This mixing period may be varied, if, in the opinion of the Engineer, the mixture is not uniform.

(b) **Continuous or Drum Mix Type Mixer.** The amount of aggregate and precoat material or fluxing material entering the mixer and the rate of travel through the mixer shall be so coordinated that a uniform mixture of the specified grading and percent by weight of precoat material or fluxing material will be produced.

304.8. Measurement and Payment. Aggregates will be measured and paid for in accordance with the governing specifications for the items of construction in which these materials are used.

ITEM 310

PRIME COAT
(Asphaltic Material Only)

310.1. Description. This item shall consist of an application of asphaltic material on the completed base course and/or other approved area in accordance with these specifications.

Prime Coat shall not be applied when the air temperature is below 60 F and falling, but it may be applied when the air temperature is above 50 F and is rising, the air temperature being taken in the shade and away from artificial heat. Asphaltic material shall not be placed when general weather conditions, in the opinion of the Engineer, are not suitable.

310.2. Materials. The asphaltic material used for the prime coat shall be of the type and grade shown on plans and when tested by approved laboratory methods shall meet the requirements of the Item, "Asphalts, Oils and Emulsions".

The asphaltic material used for the prime coat may, upon instructions from the Engineer, be further cut back by the addition of a maximum of fifteen (15) percent of an approved grade of gasoline and/or kerosene, by volume.

310.3. Construction Methods. When in the opinion of the Engineer, the area and/or base is satisfactory to receive the prime coat, the surface shall be cleaned by sweeping or other approved methods. If found necessary by the Engineer, the surface shall be lightly sprinkled just prior to application of the asphaltic material. The asphaltic material shall be applied on the clean surface by an approved type of self-propelled pressure distributor so operated as to distribute the material in the quantity specified, evenly and

smoothly under a pressure necessary for proper distribution. The Contractor shall provide all necessary facilities for determining the temperature of the asphaltic material in all of the heating equipment and in the distributor, for determining the rate at which it is applied, and for securing uniformity at the junction of two distributor loads.

All storage tanks, piping, retorts, booster tanks and distributors used in storing or handling asphaltic material shall be kept clean and in good operating condition at all times, and they shall be operated in such manner that there will be no contamination of the asphaltic material with foreign material. It shall be the responsibility of the Contractor to provide and maintain in good working order a recording thermometer at the storage heating unit at all times. The distributor shall have been recently calibrated and the Engineer shall be furnished an accurate and satisfactory record of such calibration. After beginning of the work, should the yield on the asphaltic material applied appear to be in error, the distributor shall be calibrated in a manner satisfactory to the Engineer before proceeding with the work.

The Engineer will select the temperature of application based on the temperature-viscosity relationship that will permit application of the asphalt within the limits recommended in the Item, "Asphalts, Oils and Emulsions". The recommended range for the viscosity of the asphalt is 100 to 125 centistokes. The Contractor shall apply the asphalt at a temperature within 15 F of the temperature selected.

The Contractor shall be responsible for the maintenance of the surface until the work is accepted by the Engineer.

No traffic, hauling or placement of any subsequent courses shall be permitted over the freshly applied prime coat until authorized by the Engineer.

310.4. Measurement. The asphaltic material for prime coat will be measured at point of delivery on the road in gallons at the applied temperature. The quantity to be paid for shall be the number of gallons used, as directed, in the accepted prime coat.

310.5. Payment. The work performed and materials furnished as prescribed by this item and measured as provided under "Measurement" will be paid for at the unit price bid for "Asphaltic Material", of the type and grade specified, which price shall be full compensation for cleaning the area and/or base; for furnishing, heating, hauling and distributing the asphaltic material as specified; for all freight involved; and for all manipulation, labor, tools, equipment and incidentals necessary to complete the work.

ITEM 312

PRIME COAT
(Asphaltic Material and Sand)

312.1. **Description.** This item shall consist of an application of asphaltic material on the completed base course and/or other approved area covered with sweepings from the base and native sand, and constructed in accordance with these specifications.

Prime Coat shall not be applied when the air temperature is below 60 F and falling, but may be applied when the air temperature is above 50 F and is rising, the air temperature being taken in the shade and away from artificial heat. Asphaltic material shall not be placed when general weather conditions, in the opinion of the Engineer, are not suitable.

312.2. **Materials.** The asphaltic material used for the prime coat shall be of the type and grade shown on plans and when tested by approved laboratory methods shall meet the requirements of the Item, "Asphalts, Oils and Emulsions".

Base course sweepings shall be those sweepings obtained from cleaning the base.

Native sand shall be local material obtained from approved sources and subject to the approval of the Engineer.

312.3. **Construction Methods.** Native sand, as specified above, shall be hauled in vehicles of uniform capacity. When, in the opinion of the Engineer, the area and/or base is satisfactory to receive the prime coat, the surface shall be cleaned by sweeping or other approved methods. If found necessary by the Engineer, the surface shall be lightly sprinkled just prior to application of the asphaltic material. Asphaltic material shall be applied on the clean surface by an approved type of self-propelled pressure distributor so operated as to distribute the material in the quantity specified, evenly and smoothly, under a pressure necessary for proper distribution. The Contractor shall provide all necessary facilities for determining the temperature of the asphaltic material in all of the heating equipment and in the distributor, for determining the rate at which it is applied, and for securing uniformity at the junction of two distributor loads. The distributor shall have been recently calibrated and the Engineer shall be furnished an accurate and satisfactory record of such calibration. After beginning the work, should the yield on the asphaltic material appear to be in error, the distributor shall be calibrated in a manner satisfactory to the Engineer before proceeding with the work.

The surface shall then be covered with base sweepings and/or native sand as directed by the Engineer. The surface shall then be dragged with an approved type of drag broom so as to evenly and smoothly distribute the cover material. This brooming or dragging shall continue until, in the opinion of the Engineer, the course has properly cured under traffic.

No traffic, hauling or placing of subsequent courses shall be permitted over the freshly applied prime coat until authorized by the Engineer.

All storage tanks, piping, retorts, booster tanks and distributors used in storing or handling asphalt shall be kept clean and in good operating condition at all times, and they shall be operated in such manner that there will be no contamination of the asphaltic material with foreign material. It shall be the responsibility for the Contractor to provide and maintain in good working order a recording thermometer at the storage heating unit at all times.

The Engineer will select the temperature of application based on the temperature-viscosity relationship that will permit application of the asphalt within the limits recommended in the Item, "Asphalts, Oils and Emulsions". The recommended range for the viscosity of the asphalt is 100 to 125 centistokes. The Contractor shall apply the asphalt at a temperature within 15 F of the temperature selected.

312.4. **Measurement.** The asphaltic material for prime coat will be measured at point of delivery on the road in gallons at the applied temperature. The quantity to be paid for shall be the number of gallons used, as directed, in the accepted prime coat.

Native Sand will be measured by the cubic yard in vehicles as applied on the road.

312.5. **Payment.** The work performed and materials furnished as prescribed by this item and measured as provided under "Measurement" will be paid for at the unit prices bid for "Asphaltic Material", of the type and grade specified, and for "Native Sand", which prices shall each be full compensation for cleaning the base; for furnishing, preparing, hauling and placing all materials (including application of base sweepings); for all freight involved; for spreading, dragging, brooming, finishing and maintaining under traffic until accepted; and for all manipulation, labor, tools, equipment and incidentals necessary to complete the work.

ITEM 314

EMULSIFIED ASPHALT TREATMENT

314.1. **Description.** "Emulsified Asphalt Treatment" shall consist of one or more applications of a mixture of emulsified asphalt of the type specified on the plans and water to be used as a base treatment, earthwork seal,

prime coat or dust preventative. This mixture may be applied to the base course, subgrade, shoulders or detours at the locations and to the extent shown on plans or as directed by the Engineer.

314.2. **Materials.** The amount of emulsified asphalt in the mixture expressed as a percent by volume of the total mixture, shall be within the limits specified on the plans. When tested by approved laboratory methods, the emulsified asphalt used shall meet the requirements of the Item, "Asphalts, Oils and Emulsions". The water used shall meet the requirements of the Item, "Sprinkling".

314.3. **Construction Methods.** The emulsified asphalt and water mixture shall be applied by a self-propelled sprinkler meeting requirements of the Item, "Sprinkling", so operated as to uniformly distribute the mixture in the quantity determined by the Engineer.

The emulsion and water may be mixed in the sprinkler tank. The Contractor shall make suitable provisions for agitating the two materials sufficiently to produce a uniform blend. The sprinkler tank shall have been recently calibrated, and the Engineer shall be furnished an accurate and satisfactory record of such calibration. After beginning the work, should the yield of the emulsion applied appear to be in error, the distributor shall be calibrated in a manner satisfactory to the Engineer before proceeding with the work.

Where indicated on the plans or directed by the Engineer, "Emulsified Asphalt Treatment" shall be mixed with the base or subbase material. The emulsified asphalt and water mixture shall be applied and incorporated into the top portion of subbase or base course layers to the depth and width shown on plans or directed by the Engineer. Successive applications of a mixture of emulsified asphalt and water shall be applied to the area to be treated with either a pressure distributor or an approved sprinkler and shall be continued until all of the specified amount of emulsified asphalt has been incorporated into the material or as directed by the Engineer.

The percentage of emulsified asphalt in the mixture shall be regulated to insure that the specified amount of emulsified asphalt is incorporated into the material, while maintaining the proper moisture content.

The treated material shall be mixed by blading then shaped and compacted by rolling and blading, as required by the pertinent specification for the particular course, to the lines, grades and typical sections shown on plans. The surface shall be maintained with light applications of emulsified asphalt and water or raw water, as directed by the Engineer, during curing of the course.

314.4. **Measurement.** Emulsified asphalt will be measured by the gallon of emulsified asphalt used in the emulsified asphalt and water mixture.

314.5. Payment. The work performed and the emulsified asphalt furnished as prescribed by this item and measured as provided under "Measurement" will be paid for at the unit price bid for "Emulsified Asphalt" of the type specified, which price shall be full compensation for furnishing all required materials, including mixing water for application; for all freight involved; for all hauling, mixing and distributing the mixture as specified; and for all manipulation, labor, tools, equipment and incidentals necessary to complete the work.

ITEM 316

SEAL COAT

316.1. Description. This item shall consist of a surface treatment composed of a single application of asphalt covered with aggregate for the sealing of existing pavements in accordance with these specifications.

Seal coats shall not be applied when the air temperature is below 60 F and is falling, but may be applied when the air temperature is above 50 F and is rising, the air temperature being taken in the shade and away from artificial heat. Seal coats shall not be applied when the temperature of the roadway surface is below 60 F. Asphaltic material shall not be placed when general weather conditions, in the opinion of the Engineer, are not suitable.

316.2. Materials.

(1) **Asphaltic Materials.** The asphaltic materials used shall be one or more of the materials prescribed in the Item, "Asphalts, Oils and Emulsions", whichever are called for on the plans.

(2) **Aggregate.** The aggregate used shall be of the type and grade or types and grades as noted on the plans and selected from those prescribed in the Items, "Aggregate for Surface Treatments", "Aggregate for Surface Treatments (Precoated)", or "Aggregate for Surface Treatments (Lightweight)".

(3) **Aggregate (Stockpiled).** When plans include, "Aggregate (Stockpiled)", aggregate of the type and grade specified for the seal coat shall be stockpiled within the limits of the project at sites designated by the Engineer. Stockpile sites shall be leveled if required and prepared as specified herein.

316.3. Construction Methods. The area to be treated shall be cleaned of dirt, dust or other deleterious matter by sweeping or other approved methods. If it is found necessary by the Engineer, the surface shall be lightly sprinkled just prior to the application of asphaltic material. Asphaltic material shall be applied on the cleaned surface by an approved type of self-propelled pressure distributor so operated as to distribute the material in

the quantity specified, evenly and smoothly, under a pressure necessary for proper distribution. The Contractor shall provide all necessary facilities for determining the temperature of the asphaltic material in all of the heating equipment and in the distributor, for determining the rate at which it is applied, and for securing uniformity at the junction of two distributor loads. The distributor shall have been recently calibrated and the Engineer shall be furnished an accurate and satisfactory record of such calibration. After beginning the work, should the yield on the asphaltic material appear to be in error, the distributor shall be calibrated in a manner satisfactory to the Engineer before proceeding with the work.

Asphaltic material may be applied for the full width of the seal coat in one application unless the width exceeds 26 feet. Asphaltic material shall not be applied until immediate covering with aggregate is assured.

Aggregate shall be immediately and uniformly applied and spread by an approved self-propelled coninuous feed aggregate spreader, unless otherwise shown on the plans or authorized by the Engineer in writing. The aggregate shall be applied at the approximate rates indicated on the plans and as directed by the Engineer.

The entire surface shall be broomed, bladed or raked as required by the Engineer and shall be thoroughly rolled with the type or types of rollers specified on the plans. Rolling equipment shall meet the governing specifications for the Item, "Rolling".

The Contractor shall be responsible for the maintenance of the surface until the work is accepted by the Engineer. All holes or failures in the seal coat surface shall be repaired by use of additional asphalt and aggregate and all fat or bleeding surfaces shall be covered with approved cover material in such manner that the asphaltic material will not adhere to or be picked up on the wheels of vehicles.

Temporary stockpiling of aggregates on the roadway will be permitted provided the stockpiles are spaced not less than 1,000 feet apart and are so placed that they neither obstruct traffic nor interfere with roadway drainage. The Contractor shall be responsible for the proper preparation of all stockpile areas before aggregates are placed thereon, including leveling and cleaning of debris necessary for protection of the aggregate to prevent any contamination thereof.

All storage tanks, piping, retorts, booster tanks and distributors used in storing or handling asphaltic material shall be kept clean and in good operating condition at all times, and they shall be operated in such manner that there will be no contamination of the asphalt with foreign material. It shall be the responsibility of the Contractor to provide and maintain in good working order a recording thermometer at the storage heating unit at all times.

The Engineer will select the temperature of application based on the temperature-viscosity relationship that will permit application of the asphalt within the limits recommended in the Item, "Asphalts, Oils and Emulsions". The recommended range for the viscosity of the asphalt is 100 to 125 centistokes. The Contractor shall apply the asphalt at a temperature within 15 F of the temperature selected.

When shown on the plans, the Department will furnish satisfactory aggregate to the Contractor for designated sections of the project free of charge in stockpiles at locations shown on the plans. The Contractor shall load, haul, distribute and apply the stockpiled aggregate and clean up all stockpiles in accordance with specification requirements governing for this item.

316.4. Measurement. Asphaltic material will be measured at point of application on the road in gallons at the applied temperature. The quantity to be paid for shall be the number of gallons used, as directed, in the accepted seal coat.

Aggregate will be measured by the cubic yard in vehicles as applied on the road.

Aggregate (Stockpiled), if required to be furnished, will be measured by the cubic yard of material in vehicles at the point of stockpiling.

When "Loading, Hauling and Distributing Aggregate" is a bid item, it will be measured by the cubic yard in vehicles as applied on the road.

Rolling of the type specified on plans, performed as required by the Engineer, will be measured by the actual hours such rolling equipment works.

316.5. Payment. The work performed and materials furnished as prescribed by this item and measured as provided under "Measurement" will be paid for at the unit prices bid for "Asphalt", "Aggregate" and "Aggregate (Stockpiled)", if required, of the type and grade specified, which prices shall each be full compensation for cleaning and sprinkling the existing surface; for furnishing, preparing, hauling, and placing all materials; for all freight involved; and for all manipulations, labor, tools, equipment and incidentals necessary to complete the work, except rolling.

When "Loading, Hauling and Distributing Aggregate" is a bid item, the work performed and measured as provided for herein will be paid for at the unit price bid for "Load, Haul and Distribute Aggregate", which price shall be full compensation for loading, hauling, applying and distributing aggregate and cleaning up stockpiles, and all manipulation, labor, tools, equipment and incidentals necessary to complete the work except rolling.

All rolling performed as required will be measured and paid for in accordance with the provisions governing the Item, "Rolling".

ITEM 320

ONE COURSE SURFACE TREATMENT

320.1. Description. This item shall consist of a wearing surface composed of a single application of asphaltic material covered with aggregate, constructed on the prepared base course or surface in accordance with these specifications.

One course surface treatment shall not be applied when the air temperature is below 60 F and is falling, but it may be applied when the air temperature is above 50 F and is rising, the air temperature being taken in the shade and away from artificial heat. One course surface treatment shall not be applied when the temperature of the roadway surface is below 60 F. Asphaltic material shall not be placed when general weather conditions, in the opinion of the Engineer, are not suitable.

320.2. Materials.

(1) **Asphaltic Materials.** The asphaltic materials used shall be one or more of the materials prescribed in the Item, "Asphalts, Oils and Emulsions", whichever are called for on the plans.

(2) **Aggregate.** The aggregate used shall be of the type and grade or types and grades as noted on the plans and selected from those prescribed in the Items, "Aggregate for Surface Treatments", "Aggregate for Surface Treatments (Precoated)", or "Aggregate for Surface Treatments (Lightweight)".

(3) **Aggregate (Stockpiled).** When plans include "Aggregate (Stockpiled)", aggregate of the type and grade specified for the surface treatment shall be stockpiled within the limits of the project at sites designated by the Engineer. Stockpile sites shall be leveled if required and prepared as specified herein.

320.3. Construction Methods. The area to be treated shall be cleaned of dirt, dust, or other deleterious matter by sweeping or other approved methods. If it is found necessary by the Engineer the surface shall be lightly sprinkled just prior to the application of the asphaltic material.

Asphaltic material shall be applied on the clean surface by an approved type of self-propelled pressure distributor so operated as to distribute the material in the quantity specified, evenly and smoothly, under a pressure necessary for proper distribution. The Contractor shall provide all necessary facilities for determining the temperature of asphaltic material in all of the heating equipment and in the distributor, for determining the rate at which it is applied, and for securing uniformity at the junction of two distributor loads. The distributor shall have been recently calibrated and the En-

gineer shall be furnished an accurate and satisfactory record of such calibration. After beginning the work, should the yield on the asphaltic material appear to be in error, the distributor shall be calibrated in a manner satisfactory to the Engineer before proceeding with the work.

Asphaltic material may be applied for the full width of the surface treatment in one application, unless the width exceeds 26 feet. No traffic or hauling will be permitted over the freshly applied asphaltic material. Asphaltic material shall not be applied until immediate covering is assured.

Aggregate shall be immediately and uniformly applied and spread by an approved self-propelled continuous feed aggregate spreader, unless otherwise shown on the plans or authorized by the Engineer in writing. The aggregate shall be applied at the approximate rates indicated on the plans and as directed by the Engineer.

The Contractor shall be responsible for the maintenance of the surface until the work is accepted by the Engineer.

The entire surface shall be broomed, bladed or raked as required by the Engineer and shall be thoroughly rolled with the type or types of rollers specified on the plans. Rolling equipment shall meet the governing specifications for the Item, "Rolling".

Temporary stockpiling of the aggregate on the roadway will be permitted provided the stockpiles are spaced not less than 1,000 feet apart and are so placed that they neither obstruct traffic nor interfere with roadway drainage. The Contractor shall be responsible for the proper preparation of all stockpile areas before aggregates are placed thereon, including leveling and cleaning of debris necessary for protection of the aggregate to prevent any contamination thereof.

All storage tanks, piping, retorts, booster tanks and distributors used in storing or handling asphaltic materials shall be kept clean and in good operating condition at all times, and they shall be operated in such manner that there will be no contamination of the asphaltic materials with foreign material. It shall be the responsibility of the Contractor to provide and maintain in good working order a recording thermometer at the storage heating unit at all times. The Engineer will select the temperature of application based on the temperature-viscosity relationship that will permit application of the asphalt within the limits recommended in the Item, "Asphalts, Oils and Emulsions". The recommended range for the viscosity of the asphalt is 100 to 125 centistokes. The Contractor shall apply the asphalt at a temperature within 15 F of the temperature selected.

320.4. Measurement. Asphaltic material will be measured at point of application on the road in gallons at the applied temperature. The quantity to be paid for shall be the number of gallons used, as directed, in the accepted surface treatment.

Aggregate will be measured by the cubic yard in vehicles as applied on the road.

Aggregate (Stockpiled), if required to be furnished, will be measured by the cubic yard of material in vehicles at the point of stockpiling.

Rolling of the type specified on plans, performed as required by the Engineer, will be measured by the actual hours such rolling equipment works.

320.5. **Payment.** The work performed and materials furnished as prescribed by this item and measured as provided under "Measurement" will be paid for at the unit prices bid for "Asphalt", "Aggregate" and "Aggregate (Stockpiled)", if required, of the type and grade specified, which prices shall each be full compensation for cleaning and sprinkling the base; for furnishing, preparing, hauling and placing all materials; for all freight involved; and for all manipulations, labor, tools, equipment and incidentals necessary to complete the work except rolling.

All rolling performed as required will be measured and paid for in accordance with the provisions governing the Item, "Rolling".

ITEM 322

TWO COURSE SURFACE TREATMENT

322.1. **Description.** This item shall consist of a wearing surface composed of two applications of asphaltic material, each covered with aggregate, constructed on the prepared base course or surface in accordance with these specifications.

Two course surface treatment shall not be applied when the air temperature is below 60 F and is falling, but it may be applied when the air temperature is above 50 F and is rising. Air temperature shall be taken in the shade and away from artificial heat. Two course surface treatment shall not be applied when the temperature of the roadway surface is below 60 F. Asphaltic material shall not be placed when general weather conditions, in the opinion of the Engineer, are not suitable.

322.2. **Materials.**

(1) **Asphaltic Materials.** The asphaltic materials used shall be one or more of the materials prescribed in the Item, "Asphalts, Oils and Emulsions", whichever are called for on the plans.

(2) **Aggregate.** The aggregate used shall be of the type and grade or types and grades as noted on the plans and selected from those prescribed in the Items, "Aggregate for Surface Treatments", "Aggregate for Surface Treatments (Precoated)", or "Aggregate for Surface Treatments (Lightweight)".

(3) **Aggregate (Stockpiled).** When plans include, "Aggregate (Stockpiled)", aggregate of the type and grade specified for the surface treatment shall be stockpiled within the limits of the project at sites designated by the Engineer. Stockpile sites shall be leveled, if required, and prepared as specified herein.

322.3. **Construction Methods.** The area to be treated shall be cleaned of dirt, dust, or other deleterious matter by sweeping or other approved methods. If it is found necessary by the Engineer, the surface shall be lightly sprinkled just prior to the first application of the asphaltic material.

Asphaltic material of the type and grade shown on the plans for the first course shall be applied on the clean surface by an approved type of self-propelled pressure distributor so operated as to distribute the material in the quantity specified, evenly and smoothly, under a pressure necessary for proper distribution. The Contractor shall provide all necessary facilities for determining the temperature of the asphaltic material in all of the heating equipment and in the distributor, for determining the rate at which it is applied, and for securing uniformity at the junction of two distributor loads. The distributor shall have been recently calibrated and the Engineer shall be furnished an accurate and satisfactory record of such calibration. After beginning the work, should the yield on the asphaltic material appear to be in error, the distributor shall be calibrated in a manner satisfactory to the Engineer before proceeding with the work.

Asphaltic material for each course may be applied for the full width of the surface treatment in one application, unless the width exceeds 26 feet. No traffic or hauling will be permitted over the freshly applied asphaltic material. Asphaltic material shall not be applied until immediate covering is assured.

Aggregate, of the type and grade shown on the plans for the first course, shall be immediately and uniformly applied and spread by an approved self-propelled continuous feed aggregate spreader, unless otherwise shown on the plans or authorized by the Engineer in writing. The aggregate shall be applied at the approximate rates indicated on the plans and as directed by the Engineer. The Contractor shall be responsible for the maintenance of the surface of the first course until the second course is applied.

The entire surface shall then be broomed, bladed or raked as required by the Engineer and shall be thoroughly rolled with the type or types of rollers specified on the plans. Rolling equipment used shall meet the governing specifications for the Item, "Rolling".

The second course shall consist of asphaltic material and aggregate of the type and grade indicated on the plans for the second course. The asphaltic material and aggregate for this second course shall be applied and covered in the manner specified for the first application. The surface shall

then be broomed, bladed or raked as required by the Engineer and thoroughly rolled as specified for the first course. Asphaltic material and aggregates for both courses shall be applied at the approximate rates indicated on the plans and as directed by the Engineer.

The Contractor shall be responsible for the maintenance of the surface until the work is accepted by the Engineer.

Temporary stockpiling of aggregates on the roadway will be permitted provided the stockpiles are spaced not less than 1,000 feet apart and are so placed that they neither obstruct traffic nor interfere with roadway drainage. The Contractor shall be responsible for the proper preparation of all stockpile areas before aggregates are placed thereon, including leveling and cleaning of debris necessary for protection of the aggregate to prevent any contamination thereof.

All storage tanks, piping, retorts, booster tanks and distributors used in storing or handling asphaltic materials shall be kept clean and in good operating condition at all times, and they shall be operated in such manner that there will be no contamination of the asphaltic material with foreign material. It shall be the responsibility of the Contractor to provide and maintain in good working order a recording thermometer at the storage heating unit at all times.

The Engineer will select the temperature of application based on the temperature-viscosity relationship that will permit application of the asphalt within the limits recommended in the Item, "Asphalts, Oils and Emulsions". The recommended range for the viscosity of the asphalt is 100 to 125 centistokes. The Contractor shall apply the asphalt at a temperature within 15 F of the temperature selected.

322.4. **Measurement.** Asphaltic material will be measured at point of application on the road in gallons at the applied temperature. The quantity to be a paid for shall be the number of gallons used, as directed, in the accepted surface treatment.

Aggregate will be measured by the cubic yard in vehicles as applied on the road.

Aggregate (Stockpiled), if required to be furnished, will be measured by the cubic yard of material in vehicles at the point of stockpiling.

Rolling of the type specified on plans, performed as required by the Engineer, will be measured by the actual hours such rolling equipment works.

322.5. **Payment.** The work performed and materials furnished as prescribed by this item and measured as provided under "Measurement" will be paid for at the unit prices bid for "Asphalt", "Aggregate" and "Aggregate (Stockpiled)", if required, of the type and grade specified, which

prices shall each be full compensation for cleaning and sprinkling the base; for furnishing, preparing, hauling and placing all materials; for all freight involved; and for all manipulations, labor, tools, equipment and incidentals necessary to complete the work; except rolling.

All rolling performed as required will be measured and paid for in accordance with the provisions governing the Item, "Rolling".

ITEM 324

THREE COURSE SURFACE TREATMENT

324.1. Description. This item shall consist of a wearing surface composed of three applications of asphaltic material, each covered with aggregate, constructed on the prepared base course or surface in accordance with these specifications.

Three course surface treatment shall not be applied when the air temperature is below 60 F and is falling, but it may be applied when the air temperature is above 50 F and is rising. Air temperature shall be taken in the shade and away from artificial heat. Three course surface treatment shall not be applied when the temperature of the roadway surface is below 60 F. Asphaltic material shall not be placed when general weather conditions, in the opinion of the Engineer, are not suitable.

324.2. Materials.

(1) Asphaltic Materials. The asphaltic materials used shall be one or more of the materials prescribed in the Item, "Asphalts, Oils and Emulsions", whichever are called for on the plans.

(2) Aggregate. The aggregate used shall be of the type and grade or types and grades as noted on the plans and selected from those prescribed in the Items, "Aggregate for Surface Treatments", "Aggregate for Surface Treatments (Precoated)", or "Aggregate for Surface Treatments (Lightweight)".

(3) Aggregate (Stockpiled). When plans include "Aggregate (Stockpiled)", aggregate of the type and grade specified for the surface treatment shall be stockpiled within the limits of the project at sites designated by the Engineer. Stockpile sites shall be leveled if required and prepared as specified herein.

324.3. Construction Methods. The area to be treated shall be cleaned of dirt, dust or other deleterious matter by sweeping or other approved methods. If it is found necessary by the Engineer, the surface shall be lightly sprinkled just prior to the first application of asphaltic material.

Asphaltic material of the type and grade shown on the plans for the first course shall be applied on the clean surface by an approved type of self-propelled pressure distributor so operated as to distribute the material in the quantity specified, evenly and smoothly, under a pressure necessary for proper distribution. The Contractor shall provide all necessary facilities for determining the temperature of the asphaltic material in all of the heating equipment and in the distributor, for determining the rate at which it is applied, and for securing uniformity at the junction of two distributor loads. The distributor shall have been recently calibrated and the Engineer shall be furnished an accurate and satisfactory record of such calibration. After beginning the work, should the yield on the asphaltic material appear to be in error, the distributor shall be calibrated in a manner satisfactory to the Engineer before proceeding with the work.

Asphaltic material for each course may be applied for the full width of the surface treatment in one application, unless the width exceeds 26 feet. No traffic or hauling will be permitted over the freshly applied asphaltic material. No asphaltic material shall be applied until immediate covering is assured.

Aggregates, of the type and grade shown on the plans for the first course, shall be immediately and uniformly applied and spread by an approved self-propelled continuous feed aggregate spreader, unless otherwise shown on the plans or authorized by the Engineer in writing. The aggregate shall be applied at the approximate rates indicated on the plans and as directed by the Engineer.

The entire first course shall then be broomed, bladed or raked as required by the Engineer and shall be thoroughly rolled with the type or types of rollers specified on the plans. Rolling equipment used shall meet the governing specifications for the Item, "Rolling".

The Contractor shall be responsible for the maintenance of the first course until the second course is applied.

The second course shall consist of asphaltic material and aggregate of the type and grade indicated on the plans for the second course. The asphaltic material for this second course shall be applied and covered with aggregate in the manner specified for the first application. The surface shall then be broomed, bladed or raked as required by the Engineer and thoroughly rolled as specified for the first course. Asphaltic material and aggregate for the second course shall be applied at the approximate rate indicated on the plans and as directed by the Engineer.

The Contractor shall be responsible for the maintenance of the surface of the second course until the third course is applied.

The third course shall consist of asphaltic material and aggregate of the type and grade indicated on the plans for the third course. The asphaltic material for this third course shall be applied and covered with aggregate in the manner specified for the first application. The surface shall then be broomed, bladed or raked as required by the Engineer and thoroughly rolled as specified for the first course. Asphaltic material and aggregate for the third course shall be applied at the approximate rate indicated on the plans and as directed by the Engineer.

The contractor shall be responsible for the maintenance of the surface until the work is accepted by the Engineer.

Temporary stockpiling of aggregates on the roadway will be permitted provided the stockpiles are spaced not less than 1,000 feet apart and are so placed that they neither obstruct traffic nor interfere with roadway drainage. The Contractor shall be responsible for the proper preparation of all stockpile areas before aggregates are placed thereon, including leveling and cleaning of debris necessary for protection of the aggregate to prevent any contamination thereof.

All storage tanks, piping, retorts, booster tanks and distributors used in storing or handling asphaltic material shall be kept clean and in good operating condition at all times, and they shall be operated in such manner that there will be no contamination of the asphaltic material with foreign material. It shall be the responsibility of the Contractor to provide and maintain in good working order a recording thermometer at the storage heating unit at all times.

The Engineer will select the temperature of application based on the temperature-viscosity relationship that will permit application of the asphalt within the limits recommended in the Item, "Asphalts, Oils and Emulsions". The recommended range for the viscosity of the asphalt is 100 to 125 centistokes. The Contractor shall apply the asphalt at a temperature within 15 F of the temperature selected.

324.4. **Measurement.** Asphaltic material will be measured at point of application on the road in gallons at the applied temperature. The quantity to be paid for shall be the number of gallons used, as directed, in the accepted surface treatment.

Aggregate will be measured by the cubic yard in vehicles as applied on the road.

Aggregate (Stockpiled), if required to be furnished, will be measured by the cubic yard of material in vehicles at the point of stockpiling.

Rolling of the type specified on plans, performed as required by the Engineer, will be measured by the actual hours such rolling equipment works.

324.5. Payment. The work performed and materials furnished as prescribed by this item and measured as provided under "Measurement" will be paid for at the unit prices bid for "Asphalt", "Aggregate" and "Aggregate (Stockpiled)", if required, of the type and grade specified, which prices shall be full compensation for cleaning and sprinkling the base; for furnishing, preparing, hauling and placing all materials; for all freight involved; and for all manipulations, labor, tools, equipment and incidentals necessary to complete the work, except rolling.

All rolling performed as required will be measured and paid for in accordance with the provisions governing the Item, "Rolling".

ITEM 330

COLD MIX LIMESTONE ROCK ASPHALT PAVEMENT
(Class A)

330.1. Description. This item shall consist of a surface course, a leveling-up course, or a combination of these courses as shown on plans, composed of a compacted layer of natural limestone rock asphalt, cold mixed with a prescribed flux and shall be constructed on the completed and approved base course, existing pavement or slab, all in accordance with these specifications and in conformity with the lines, grades, quantities and typical cross section shown on plans.

330.2. Materials.

(1) Rock Asphalt. This material shall be composed of natural limestone rock asphalt. This material shall contain not more than 1 percent by weight or organic matter (other than native bitumen), clays, loam or pebbles coated therewith and shall contain not more than 5 percent by weight of any one of or combination of slate, shale, schist, soft particles or other undesirable materials when tested in accordance with Test Method Tex-217-F, Part I.

The rock asphalt mixture shall be uniform and well graded and shall contain natural limestone rock asphalt aggregate with an average bitumen content of 5 to 9 percent by weight of naturally impregnated asphalt as determined by Test Method Tex-215-F, and shall contain not more than 2 percent by weight of any one of or combination of iron pyrites, or other objectionable matter, as determined by Test Method Tex-217-F, Part I.

No aggregate shall contain a total of more than 5 percent by weight of impurities or objectionable matter listed above.

The portion of the material passing the No. 10 sieve shall have by weight not more than 8.5 percent nor less than 5 percent of naturally impregnated asphalt as determined by Test Method Tex-215-F.

Except for Type D Paving Mixture, the portion of the material retained on the No. 4 sieve shall contain by weight from 20 percent to 35 percent of material with a naturally impregnated asphalt content of less than 1 percent. The portion of the material retained on the No. 4 sieve for Type D Paving Mixture shall contain by weight from 15 percent to 35 percent of the material with a naturally impregnated asphalt content of less than 1 percent. This percentage shall be adjusted within the grading limits to obtain an acceptable mixture. The percentage of material with less than 1 percent naturally impregnated asphalt shall be determined according to Test Method Tex-220-F, and the asphalt content of this separated material shall be determined according to Test Method Tex-215-F.

The percent of wear on limestone rock asphalt aggregate shall be no more than 40 as determined by Test Method Tex-410-A and shall be made on that portion of the material retained on the No. 4 sieve having a naturally impregnated asphalt content of less than 1 percent.

When indicated on the plans, this material shall have a minimum polish value as shown on the plans, when tested in accordance with Test Method Tex-438-A.

No material shall be used before the source has been approved and the material has been sampled, tested and approved by the Engineer. The Contractor shall notify the Engineer in advance if change in source of any material is desired, and both the new source and material shall be approved by the Engineer prior to use.

(2) Asphaltic Material.

(a) Fluxing Material. The fluxing material shall meet the requirements of the Item, "Asphalts, Oils, and Emulsions".

(b) Tack Coat. The asphalt material for tack coat shall meet the requirements for emulsified asphalt, MS-1, or cut-back asphalt, RC-250. If RC-250 cut-back asphalt is used it may, upon instruction from the Engineer, be diluted by the addition of an approved grade of gasoline and/or kerosene, not to exceed 15 percent by volume. Asphaltic materials shall meet the requirements of the Item, "Asphalts, Oils and Emulsions".

330.3 Paving Mixtures.

(1) Types. The paving mixture shall consist of a uniform mixture of crushed limestone rock asphalt aggregate, flux and water if needed. The grading shall be such as to produce, when properly proportioned, a mixture which, when tested in accordance with Test Method Tex-200-F, Part I, will conform to the limitations for grading given below for the type specified prior to the application of the fluxing material to the limestone rock asphalt

aggregate. The grading to be used in these mixtures, within the limits specified, shall be approximately as designated by the Engineer, and the mixture produced shall be uniform.

	Percent by Weight
Type "A":	
Retained on 1″ sieve	0
Retained on 7/8″ sieve	0 to 2
Retained on 5/8″ sieve	5 to 15
Retained on 3/8″ sieve	25 to 35
Retained on No. 4 sieve	50 to 60
Passing No. 10 sieve	25 to 35
Type "B":	
Retained on 5/8″ sieve	0
Retained on 1/2″ sieve	0 to 2
Retained on 3/8″ sieve	5 to 15
Retained on No. 4 sieve	45 to 60
Passing No. 10 sieve	25 to 40
Type "C":	
Retained on 1/2″ sieve	0
Retained on 3/8″ sieve	0 to 2
Retained on No. 4 sieve	35 to 50
Passing No. 10 sieve	20 to 35
Type "CC":	
Retained on 1/2″ sieve	0
Retained on 3/8″ sieve	0 to 2
Retained on No. 4 sieve	35 to 50
Passing No. 10 sieve	35 to 50
Type "D":	
Retained on 3/8″ sieve	0
Retained on 1/4″ sieve	0 to 2
Retained on No. 4 sieve	5 to 15
Passing No. 10 sieve	35 to 50

(2) **Stability.** The mixture produced, when designed and tested in accordance with these specifications and approved Departmental methods, shall have a minimum Hveem stability value of 35 percent, unless otherwise shown on the plans.

Stability is a control test. If the laboratory stability of the mixture produced has a value lower than that specified, and in the opinion of the Engi-

neer is not due to change in source or quality of materials, production may proceed, and the mix shall be changed until the laboratory stability satisfies the specifications. If there is, in the opinion of the Engineer, a fundamental change in any material from that used in the design mixtures, production will be discontinued until correction measures can be made.

(3) **Tolerances.** The designated grading and fluxing material content shall be such that when the tolerances listed below are allowed, the grading and the fluxing material content will be within the limits specified. The designated grading and flux content shall be selected from the first shipment for material on each shipment or partial shipment where requested by the Engineer, and the mixture produced shall conform to this designated grading and flux content throughout each shipment or partial shipment, respectively, within the tolerances specified. The respective tolerances, based on the percent by weight of the mixture, are listed as follows:

	Percent by Weight
Retained on 7/8″ sieve	plus or minus 4
Retained on 5/8″ sieve	plus or minus 4
Retained on 1/2″ sieve	plus or minus 4
Retained on 3/8″ sieve	plus or minus 4
Retained on 1/4″ sieve	plus or minus 4
Retained on No. 4 sieve	plus or minus 4
Total Retained on No. 10 sieve	plus or minus 3
Fluxing Material	plus or minus 0.2

(4) **Water Content.** If the rock asphalt mixture is prepared at some central point and shipped to the work, water may be added to prevent setting-up in transit. If water is added, the total water so added shall not exceed 4 percent by weight and shall be administered to the mixture through an approved spray bar. If the rock asphalt mixture is prepared on or adjacent to the project, the addition of water will not be permitted unless authorized by the Engineer. The amount of water that may be added shall be as designated by the Engineer but shall not exceed 4 percent by weight. In order to insure uniformity of the rock asphalt mixture a suitable measuring device, subject to approval of the Engineer, shall be used to accurately measure the amount of water to be incorporated into each batch. All water in the mixture in excess of 4 percent by weight at the time of weighing the mixture on approved scales shall be deducted in determining the tonnage of mixture for payment. The method of determining the water content of the mixture shall be in accordance with Test Method Tex-212-F.

(5) **Physical Properties of the Mixture.** The materials may be mixed on the job or at some central mixing plant and shipped ready to use. Mixtures that do not remain workable a sufficient period of time to permit unloading by normal means, proper spreading, blading and rolling will not be acceptable.

The type and amount of the mixture used shall be as specified on the plans.

330.4. Equipment.

(1) All equipment for the handling of all materials and mixing and placing of the mixture shall be maintained in good repair and operating condition and subject to approval of the Engineer. Any equipment found to be defective and potentially affecting the quality of the paving mixture shall be replaced.

(2) **Mixing Plants.** Mixing plants that will not continuously produce a mixture meeting all of the above requirements will be condemned.

Mixing plants may be either the weigh-batch type or the continous mixing type. Both types of plant shall be equipped with satisfactory conveyors, power units, aggregate handling equipment, aggregate screens and bins and shall consist of the following essential pieces of equipment:

(a) **Weigh-batch Type.**

Cold Aggregate Bin and Proportioning Device. The cold aggregate bins or aggregate stockpiles shall be of sufficient number and shall be of sufficient size to supply the amount of aggregate required to keep the plant in continuous operation. The proportioning device shall be such as will provide a uniform and continous flow of aggregate in the desired proportion to the plant.

Screening and Proportioning. The screening capacity and size of the bins shall be sufficient to screen and store the amount of aggregate required to properly operate the plant and keep the plant in continuous operation at full capacity. Proper provisons shall be made to enable inspection forces to have easy and safe access to the proper location on the mixing plant where accurate representative samples of aggregate may be taken from the bins for testing. The aggregate shall be separated into at least four bins when producing Type "A" mixtures, at least three bins when producing Type "B" and at least two bins when producing Types "C", "CC", and "D".

Type "A":

Bin No. 1 - will contain aggregates of which 85 to 100 percent by weight will pass the No. 10 sieve.

Bin No. 2 - will contain aggregates of which at least 85 percent by weight will be of such size as to pass the 3/8 inch sieve and be retained on the No. 10 sieve.

Bin No. 3 - will contain aggregates of which at least 85 percent by weight will be of such size as to pass the 1/2 inch sieve and be retained on the 1/4 inch sieve.

Bin No. 4 - will contain aggregates of which at least 85 percent by weight will be of such size as to pass the 7/8 inch sieve and be retained on the 3/8 inch sieve.

Type "B":

Bin No. 1 - will contain aggregates of which 85 to 100 percent by weight will pass the No. 10 sieve.

Bin No. 2 - will contain aggregates of which at least 85 precent by weight will be of such size as to pass the 3/8 inch sieve and be retained on the No. 10 sieve.

Bin No. 3 - will contain aggregates of which at least 85 percent by weight will be of such size as to pass the 1/2 inch sieve and be retained on the 1/4 inch sieve.

Type "C", Type "CC" and Type "D":

Bin No. 1 - will contain aggregates of which 85 to 100 percent by weight will pass the No. 10 sieve.

Bin No. 2 - will contain aggregates of which at least 85 percent by weight will be of such size as to pass the 3/8 inch sieve and be retained on the No. 10 sieve.

Aggregate Weigh Box and Batching Scales. The aggregate weigh box and batching scales shall be of sufficient capacity to hold and weigh a complete batch of aggregate. The weigh box and scales shall conform to the requirements of the Item, "Weighing and Measuring Equipment".

Fluxing Material Bucket and Scales. The fluxing material bucket and scales shall be of sufficient capacity to hold and weigh the necessary material for one batch. If the fluxing material is measured by weight, the bucket and scales shall conform to the requirements of the Item, "Weighing and Measuring Equipment".

If a pressure type flow meter is used to measure the fluxing material, the requirement of the Item, "Weighing and Measuring Equipment", shall apply.

Mixer. The mixer shall be of the pug mill type and shall have a capacity of not less than 3,000 pounds in a single batch. The number of blades and the position of same shall be such as to give a uniform and complete circulation of the batch in the mixer. The mixer shall be equipped with an approved spray bar that will distribute the fluxing material quickly and uniformly throughout the mixer. If, in the opinion of the Engineer, any mixer has a tendency to segregate the mineral aggregate or fails to secure a thorough and uniform mixing with the fluxing material, it shall not be used. All

mixers shall be provided with an automatic time lock that will lock the discharge doors of the mixer for the required mixing period. The dump door or doors and the shaft seals of the mixer shall be tight enough to prevent the spilling of aggregate or mixture from the pug mill.

(b) Continuous Mixing Type.

Cold Aggregate Bin and Proportioning Device. Same as for weigh-batch type of plant.

Screening and Proportioning. Same requirements as specified under weigh-batch plants. These requirements shall also apply to materials that are stockpiled and that are proposed for direct use by a continuous mixing plant without the use of plant bins.

Fluxing Material Spray Bar. The fluxing material spray bar shall be so designed that the fluxing material will spray uniformly and continuously into the mixer.

Fluxing Material Meter. A fluxing material recording meter meeting the requirements of the Item, "Weighing and Measuring Equipment", shall be placed in the fluxing material line leading to the spray bar so that the accumulated amount of flux oil can be accurately determined. Provisions of a permanent nature shall be made for checking the accuracy of the meter output.

Mixer. The mixer shall be of the pug mill continuous type and shall have a capacity of not less than 40 tons of mixture per hour. If, in the opinion of the Engineer, any mixer has a tendency to segregate the aggregate or fails to secure a thorough and uniform mixing of the aggregate with the fluxing materials, it shall not be used.

(3) Spreading and Finishing Machine. The spreading and finishing machine, when permitted in Subarticle 330.6(3), shall be a type approved by the Engineer and shall be capable of producing a surface that will meet the requirements of the typical cross section and the surface test.

Automatic Screed Controls, if required, shall meet the requirements of the Item, "Automatic Screed Controls for Asphaltic Concrete Spreading and Finishing Machines".

(4) Motor Grader. The motor grader shall be a self-propelled power-grader; it shall be equipped with smooth tread pneumatic tired wheels; shall have a blade length of not less than 12 feet; shall have a wheel base of not less than 16 feet; and shall be tight and in good operating condition and approved by the Engineer.

(5) Pneumatic Tire Rollers. The pneumatic tire roller shall be an acceptable medium pneumatic tire roller conforming to the requirements of the Item, "Rolling (Pneumatic Tire)", Type B, unless otherwise specified on the plans.

(6) **Two Axle Tandem Roller.** This roller shall be an acceptable power drive tandem roller weighing not less than 8 tons.

(7) **Three Wheel Roller.** This roller shall be an acceptable power driven three wheel roller, weighing not less than 10 tons.

(8) **Three Axle Tandem Roller.** This roller shall be an acceptable power driven three axle roller weighing not less than 10 tons.

(9) **Straightedges and Templates.** The Contractor shall provide acceptable 10-foot straightedges for surface testing. Satisfactory templates shall be provided as required by the Engineer.

(10) **Scales.** All scales shall conform to the Item, "Weighing and Measuring Equipment". Platform truck scales shall be placed at a location approved by the Engineer.

(11) **Alternate Equipment.** When permitted by the Engineer in writing, equipment other than that specified which will consistently produce satisfactory results may be used.

330.5. Storage, Proportions and Mixing.

(1) **Storage of Rock Asphalt.**

Central Mixing Plants. Sufficient material shall be stored, stockpiled or produced to permit continuous operation throughout any working period without shutdowns due to material shortages. If the natural limestone rock asphalt aggregates are stored or stockpiled, they shall be handled in such a manner as to prevent segregation, the mixing of various materials or sizes and the contamination with foreign materials.

Storage of the crushed limestone rock asphalt mixture upon unpaved areas will not be permitted at the plant site. Material that comes in contact with earth or other objectionable foreign matter shall be rejected. Mixtures that do not remain workable a sufficient period of time to permit proper spreading, blading and rolling will not be acceptable. Storage, handling or loading of the rock asphalt mixture shall be in such manner as to prevent undue segregation.

(2) **Storage and Heating of Flux.** The flux storage shall be ample to meet the requirements of the plant. The flux may be heated by steam coil or direct fire to a temperature not to exceed 250 F. Agitation by steam or air will not be permitted. If direct fire heating is used, the heating equipment shall be such that it will insure positive circulation of the flux while being heated and shall be approved by the Engineer. Care shall be taken not to injure the flux by subjecting it to undue continuous heat. The heating apparatus shall be equipped with a recording thermometer with a 24 hour chart that will record the temperature of the fluxing material where it is at the highest temperature.

(3) **Proportioning.** The proportioning of the various materials entering into the mixture shall be as directed by the Engineer and in accordance with these specifications. Aggregate shall be proportioned by weight using the weigh box and batching scales when the weigh-batch type of plant is used and by volume using the aggregate proportioning device when the continuous mixer type of plant is used. The fluxing material shall be proportioned by weight or by volume based on weight using the specified equipment. The proportions of each constituent by weight of the paving mixture shall be within the following limits:

Crushed Limestone Rock Asphalt, 96 to 97.5 percent by weight.

Fluxing Material, 2.5 to 4 percent by weight.

(4) **Mixing.** In introducing the batch into the mixer, the sequence of addition of aggregate and fluxing material and the amount of mixing shall be determined by the Engineer, and shall be done in a manner to minimize formation of "flux balls" and produce optimum conditions for a homogeneous mix. The mixer shall be equipped with an approved spray bar that will distribute the fluxing material quickly and uniformly throughout the mixer. Any mixer that segregates the rock asphalt aggregate or fails to secure a thorough and uniform mixing with the fluxing material shall not be used.

Mixtures produced when the limestone rock asphalt aggregates contain moisture in excess of saturated surface dry condition will not be accepted. Excess moisture will be evidenced by visual surface moisture on the aggregates or any unusual quantities of fines clinging to the coarse aggregate.

In order to observe plant operations and the rock asphalt mixtures, adequate lighting shall be provided or mixing shall be confined to the daylight hours.

All limestone rock asphalt mixtures shipped on any one particular requisition or project shall be produced out of the same mixing plant, unless if in the opinion of the Engineer there is no difference in the quality of the rock asphalt mixture when produced by two different mixing plants. Materials produced by a weigh-batch plant shall not be mixed with material produced from a continuous mixing plant.

330.6. **Construction Methods.** The rock asphalt mixture, tack coat or prime coat shall not be placed when the air temperature is below 60 F and is falling, but it may be placed when the air temperature is above 50 F and is rising, the temperature being taken in the shade away from artifical heat, with the further provision that asphaltic mixture or tack coat shall only be placed when the humidity and general weather conditions, in the opinion of the Engineer, are suitable.

(1) **Prime Coat.** If a prime coat is required, it will be applied and paid for as a separate item. The tack coat or rock asphalt mixture shall not be applied on previously primed flexible base until the primed base has completely cured to the satisfaction of the Engineer.

(2) **Tack Coat.** Before the rock asphalt mixture is laid, the surface upon which the tack coat is to be placed shall be cleaned thoroughly to the satisfaction of the Engineer. The surface shall be given a uniform application of tack coat meeting the requirements for tack coat under asphaltic materials of this specification. This tack coat shall be applied, as directed by the Engineer, with an approved sprayer at a rate of not to exceed 0.05 gallon per square yard of surface. Where the mixture will adhere to the surface on which it is to be placed without the use of a tack coat, the tack coat may be eliminated by the Engineer. The tack coat shall be rolled with a pneumatic tire roller as directed by the Engineer.

(3) **Placing.** If the mixtures are shipped to the job, the railroad cars shall first be cleaned of all foreign matter, and the material shall be loaded in such a manner as to prevent segregation. The rock asphalt mixture, prepared as specified, shall be hauled to the work in tight vehicles previously cleaned of all foreign materials. The dispatching of the vehicles shall be so that all material delivered may be placed and shall have received its initial rolling in daylight. The mixture shall be laid only on an approved base course or pavement which has been tack-coated as previously specified and shall be free of all foreign materials. All contact surfaces of curbs and structures and all joints shall be painted with a thin uniform coating of cut-back or emulsified asphalt as required for tack-coating the base. The mixture shall be thoroughly aerated and then spread into place with a motor grader, in a uniform layer of such depth that after receiving ultimate compaction by rolling, the requirements of the typical cross sections will have been fulfilled. Hand spreading will be permitted where the mixture is placed on narrow strips or small irregular areas.

Adjacent to flush curbs, gutters, liners and structures, the surface mixture shall be finished uniformly high so that when compacted it will be slightly above the edge of the curb or flush structure. During the application of asphaltic material, care shall be taken to prevent splattering of adjacent pavement, curb and gutters or structures.

Where more than one course of pavement is to be placed, no succeeding course shall be placed until the preceding course has cured to the satisfaction of the Engineer, but shall contain not more than a maximum of 3 percent moisture and 0.2 percent hydrocarbon volatile content of the mixture by weight as determined by Test Method Tex-212-F and 213-F or test methods included in SDHPT Bulletin C-14.

Alternate Method of Placing. When indicated on the plans or directed by the Engineer in writing, the mixture may be spread with the specified

spreading and finishing machine. In placing the material with a spreading and finishing machine, rolling shall be deferred for a period of time, as directed by the Engineer, to allow for volatilization. Where more than one course of pavement is to be placed, no succeeding course shall be placed until the preceding course has cured to the satisfaction of the Engineer, but shall contain not more than a maximum of 3 percent moisture and 0.2 percent hydrocarbon volatile content of the mixture by weight as determined by Test Method Tex-212-F and 213-F.

(4) Compacting.

(a) As directed by the Engineer, the pavement shall be compacted thoroughly and uniformly with the specified rollers and/or other approved rollers.

(b) Rolling with the three wheel and tandem rollers shall start longitudinally at the sides and proceed toward the center of the pavement, overlapping on successive trips by a least half the width of the rear wheels. Alternate trips of the roller shall be slightly different in length. On superelevated curves, rolling shall begin at the low side and progress toward the high side. Rolling with pneumatic tire roller shall be done as directed by the Engineer. Rolling shall be continued until no further compaction can be obtained and all roller marks are eliminated. One tandem roller, one pneumatic tire roller and at least one three wheel roller as specified above shall be provided for each job. If the Contractor elects, he may substitute the three axle tandem roller for the two axle tandem roller and/or the three wheel roller; but in no case shall less than three rollers be in use on each job. Additional rollers shall be provided if needed. The motion of the roller shall be slow enough at all times to avoid displacement of the mixture. If any displacment occurs, it shall be corrected at once by the use of rakes and of fresh mixture where required. The roller shall not be allowed to stand on pavement which has not been fully compacted. To prevent adhesion of the surface mixture to the roller, the wheels shall be kept thoroughly moistened with water, but an excess of water will not be permitted. All rollers must be in good mechanical condition. Necessary precautions shall be taken to prevent the dropping of gasoline, oil, grease or other foreign matter on the pavement, either when the rollers are in operation or when standing. When permitted by the Engineer in writing, equipment other than that specified which will consistently produce satisfactory results may be used.

(c) Pavement Compaction. When a pavement compaction requirement is specified, the material shall be placed and compacted such that the actual specific gravity of the pavement after compaction is equal to or greater than the minimum percent, indicated on the plans, of the laboratory actual specific gravity. The method of determining the in-place actual specific gravity shall be as designated by the Engineer, each method correlating

satisfactorily with results obtained from standard tests as described in Test Method Tex-207-F. In-place percent compaction tests are intended for compaction control. If the in-place percent compaction is lower than that specified, work may proceed with changes in the construction operations, rolling procedure and/or, rolling sequence until the in-place percent compaction equals or exceeds that specified.

(d) Hand Tamping. The edges of the pavement along curbs, headers and similar structures, and pavement mixture at all places not accessible to the roller, or in such positions as will not allow thorough compaction with the roller, shall be thoroughly compacted with lightly oiled tamps.

(5) Surface Tests. The surface of the pavement, after compaction, shall be smooth and true to the established line, grade and cross section, and when tested with a 10-foot straightedge placed parallel to the centerline of the roadway, it shall have no deviation in excess of 1/16 inch per foot from the nearest point of contact. The maximum ordinate measured from the face of the straightedge shall not exceed 1/4 inch at any point. Any point in the surface not meeting these requirements shall be immediately corrected.

(6) Opening to Traffic. The pavement shall be opened to traffic when directed by the Engineer. All construction traffic allowed on the pavement shall comply with the State laws governing traffic on highways.

330.7. Measurement. The rock asphalt mixture will be measured as shown on plans by the ton of 2,000 pounds or by the cubic yard as actually used in the completed and accepted work in accordance with the plans and specifications for the project. Measurement by weight will be made on the scales as provided in this specification. Records will be kept on tare load, total load and net load of rock asphalt mixture for each load of same. All water in excess of 4 percent by weight in the mixture at the time of weighing shall be deducted from the net weight to determine the quantity for which payment is made.

The volume of the rock asphalt mixture, when measurement is by the cubic yard, will be calculated by the following formula:

$$V = \frac{W - Y}{62.4\ (27)\ G_a}$$

V = Cubic yards of compacted rock asphalt mixture
W = Total weight of rock asphalt mixture in pounds
G_a = Average actual specific gravity of three molded specimens as prepared by Test Method Tex-206-F and determined in accordance with Test Method Tex-207-F
Y = Weight of water in pounds in excess of 4% of total weight of mix at time of weighing

330.8. Payment.

(1) Work performed and materials furnished as prescribed by this item, measured as provided under "Measurement", will be paid for at the unit price bid for "Cold Mix Limestone Rock Asphalt Pavement (Class A)" of the types specified, which prices shall each be full compensation for furnishing all materials; for all heating, mixing, hauling, cleaning base course, tack coat, placing rock asphalt mixture; all blading, rolling and finishing; and for all labor, tools, equipment and incidentals necessary to complete the work except prime coat when required.

(2) Prime Coat, performed where required, will be measured and paid for in accordance with the provisions governing the Item, "Prime Coat".

(3) All templates, straightedges, scales and other weighing and measuring devices necessary for the proper construction and checking of the work shall be furnished, operated and maintained by the Contractor at his expense.

ITEM 332

COLD MIX LIMESTONE ROCK ASPHALT PAVEMENT (Class B)

332.1 Description. This item shall conform to the description and all the requirements and conditions governing the Item, "Cold Mix Limestone Rock Asphalt Pavement (Class A)", except that the aggregate portion shall consist of a blend of natural limestone rock asphalt and special aggregates and except for the additions and/or modifications specified herein.

332.2 Materials.

(1) **Rock Asphalt.** All requirements for rock asphalt in the Item, "Cold Mix Limestone Rock Asphalt Pavement (Class A)", shall apply except for the following:

That portion of the material passing the No. 10 sieve shall have not more than 8.5 percent nor less than 5.5 percent by weight of naturally impregnated asphalt as determined by Test Method Tex-215-F.

(2) **Special Aggregate.** This material shall consist of crushed aggregate having a wear loss of not more than 20 percent when tested in accordance with Test Method Tex-410-A.

(3) **Asphaltic Material.** All requirements governing asphaltic material in the Item, "Cold Mix Limestone Rock Asphalt Pavement (Class A)", shall apply.

No fines other than those produced by crushing the native limestone rock asphalt, or caused by the production and handling of the special aggregate, will be permitted.

332.3. **Paving Mixtures.** All requirements for paving mixtures in the Item, "Cold Mix Limestone Rock Asphalt Pavement (Class A)", shall govern except as follows:

The paving mixture shall consist of a uniform mixture of crushed limestone rock asphalt aggregate, special aggregate, flux and water if needed. The grading shall be such as to produce, when properly proportioned, a mixture which, when tested in accordance with Test Method Tex-200-F, Part I, will conform to the limitations for grading for the type specified prior to the application of the fluxing material. The grading shall be approximately as designated by the Engineer and within the following limits.

Type "AS"

	Percent by Weight
Retained on 1″ sieve	0
Retained on 7/8″ sieve	0 to 10
Retained on 5/8″ sieve	10 to 25
Retained on 3/8″ sieve	25 to 40
Retained on No. 4 sieve	45 to 60
Passing No. 10 sieve	25 to 40

Type "BS"

	Percent by Weight
Retained on 3/4″ sieve	0
Retained on 5/8″ sieve	0 to 2
Retained on 1/2″ sieve	0 to 10
Retained on 3/8″ sieve	10 to 25
Retained on No. 4 sieve	40 to 55
Passing No. 10 sieve	25 to 40

Type "CS"

	Percent by Weight
Retained on 5/8″ sieve	0
Retained on 1/2″ sieve	0 to 2
Retained on 3/8″ sieve	0 to 10
Retained on No. 4 sieve	35 to 55
Passing No. 10 sieve	25 to 40

Type "DS"

	Percent by Weight
Retained on 1/2″ sieve	0
Retained on 3/8″ sieve	0 to 2
Retained on No. 4 sieve	10 to 25
Passing No. 10 sieve	35 to 50

332.4 Equipment. All requirements for equipment in the Item, "Cold Mix Limestone Rock Asphalt Pavement (Class A)", shall govern except as follows:

(1) Mixing Plants.

(a) Weigh-batch Type.

Screening and Proportioning. All requirements governing the screening and proportioning equipment for the weigh-batch type mixing plant in the Item, "Cold Mix Limestone Rock Asphalt Pavement (Class A)", shall apply except that an additonal bin shall be required for each type as follows:

Type "AS"

Bin No. 5 will contain special aggregate of the following gradation:

	Percent by Weight
Retained on 1″ sieve	0
Retained on 7/8″ sieve	0 to 2
Retained on 5/8″ sieve	15 to 45
Retained on 3/8″ sieve	85 to 100
Retained on No. 4 sieve	90 to 100
Passing No. 10 sieve	95 to 100

Type "BS"

Bin No. 4 will contain special aggregate of the following gradation:

	Percent by Weight
Retained on 3/4″ sieve	0
Retained on 5/8″ sieve	0 to 2
Retained on 1/2″ sieve	5 to 20
Retained on 3/8″ sieve	50 to 80
Retained on No. 4 sieve	85 to 100
Passing No. 10 sieve	95 to 100

Type "CS"

Bin No. 3 will contain special aggregate of the following gradation:

	Percent by Weight
Retained on 5/8″ sieve	0
Retained on 1/2″ sieve	0 to 2
Retained on 3/8″ sieve	5 to 25
Retained on No. 4 sieve	85 to 100
Passing No. 10 sieve	95 to 100

Type "DS"

Bin No. 3 will contain special aggregate of the following gradation:

	Percent by Weight
Retained on 1/2" sieve	0
Retained on 3/8" sieve	0 to 2
Retained on No. 4 sieve	40 to 80
Passing No. 10 sieve	90 to 100

332.5. Storage, Proportions and Mixing.

(1) **Proportioning.** All requirements governing proportioning in the Item, "Cold Mix Limestone Rock Asphalt Pavement (Class A)", shall apply except as follows:

The proportions of each constituent by weight of the paving mixture shall be within the following limits:

Crushed Limestone Rock Asphalt	66.0 to 78.5%
Special Aggregate	20.0 to 30.0%
Fluxing Material	1.5 to 4.0%

332.6. **Construction Methods.** All requirements for construction methods in the Item, "Cold Mix Limestone Rock Asphalt Pavement (Class A)", shall govern.

332.7. **Measurement.** The rock asphalt mixture will be measured as shown on the plans by the ton of 2,000 pounds or by the cubic yard as actually used in the completed and accepted work in accordance with the plans and specifications for the project. Measurement by weight will be made on the scales as provided in this specification. Records will be kept on tare load, total load and net load of rock asphalt mixture for each load of same. All water in excess of 4 percent by weight in the mixture at the time of weighing shall be deducted from the net weight to determine the quantity for which payment is made.

The volume of the rock asphalt mixture, when measurement is by the cubic yard, will be calculated by the following formula:

$$V = \frac{W - Y}{62.4\ (27)\ G_a}$$

V = Cubic yards of compacted rock asphalt mixture

W = Total weight of rock asphalt mixture in pounds

G_a = Average actual specific gravity of three molded specimens as prepared by Test Method Tex-206-F and determined in accordance with Test Method Tex-207-F

Y = Weight of water in pounds in excess of 4% of total weight of mix a time of weighing

332.8. Payment.

(1) Work performed and materials furnished as prescribed by this item, measured as provided under "Measurement", will be paid for at the unit price bid for "Cold Mix Limestone Rock Asphalt Pavement (Class B)" of the types specified, which prices shall each be full compensation for furnishing all materials; for all heating, mixing, hauling, cleaning base course, tack coat, placing rock asphalt mixture; all blading, rolling and finishing; and for all labor, tools, equipment and incidentals necessary to complete the work except prime coat when required.

(2) Prime Coat, performed where required, will be measured and paid for in accordance with the provisions governing the Item, "Prime Coat".

(3) All templates, straightedges, scales and other weighing and measuring devices necessary for the proper construction and checking of the work shall be furnished, operated and maintained by the Contractor at his expense.

ITEM 340

HOT MIX ASPHALTIC CONCRETE PAVEMENT

340.1. Description. This item shall consist of a base course, a leveling-up course, a surface course or any combination of these courses as shown on the plans, each to be composed of a compacted mixture of mineral aggregate and asphaltic material.

The pavement shall be constructed on the previously completed and approved subgrade, base, existing wearing surface, or in the case of a bridge, on the prepared slab or as otherwise specified herein and in accordance with the details shown on the plans.

340.2. Materials.

(1) **Mineral Aggregate.** The mineral aggregate shall be composed of a coarse aggregate, a fine aggregate, and if required, a mineral filler. Samples of coarse aggregate, fine aggregate and mineral filler shall be submitted in accordance with the methods prescribed in the Item "Control of Materials" and approval of both material and of the source of supply must be obtained from the Engineer prior to delivery.

Combined mineral aggregate, prior to addition of asphalt and mineral filler, shall have a sand equivalent value of not less than 45, unless otherwise shown on plans, when sampled and tested in accordance with Test Method Tex-203-F.

Mineral aggregate from each source shall meet the tests specified herein unless otherwise specified on the plans.

(a) **Coarse Aggregate, General.** The coarse aggregate shall be that part of the aggregate retained on a No. 10 sieve and shall consist of clean, tough, durable particles. The aggregate shall be natural, manufactured or any combination thereof of uniform quality throughout. When specified on the plans, certain coarse-aggregate material may be required or prohibited.

That portion of the coarse aggregate composed of lightweight aggregate (defined as aggregate prepared by expanding, calcining or sintering) shall meet the following requirements, unless otherwise specified on the plans. The dry loose unit weight shall be at least 35 pounds per cubic foot when tested in accordance with Test Method Tex-404-A. Lightweight material may not be furnished from more than one source for this Item without the approval of the Engineer. Lightweight materials from one source, with same or similar gradation, whose unit weights vary by more than 6 percent from that used in the batch design, may require a redesign. The "Pressure Slaking Value" shall not exceed 4 percent when tested in accordance with Test Method Tex-431-A. The "Aggregate Freeze-thaw Loss" shall not exceed 7 percent when tested in accordance with Test Method Tex-432-A.

The point of sampling for tests, Test Method Tex-217-F (Part I and Part II), will be after final processing by the mixing plant and prior to the addition of asphalt for weigh-batch and continuous plants and at the cold feed for the drum mix plants unless otherwise shown on plans.

For the coarse aggregate sampled from the hot bins and tested in accordance with Test Method Tex-217-F (Part II, Decantation), the amount of material removed shall not exceed 1 percent except for Type "F" for which it shall not exceed 2 percent.

When it is specified that the coarse aggregate be sampled during delivery to the plant, from the stockpile, or from the cold feed, the material removed when tested in accordance with Test Method Tex-217-F (Part II, Decantation), shall not exceed 2 percent.

Unless otherwise shown on the plans, when the coarse aggregate is tested in accordance with Test Method Tex-217-F (Part I, Separation of Deleterious Material), the amount of organic matter, clay, loam or particles coated therewith or other undesirable materials shown in the plans shall not exceed 2 percent.

The coarse aggregate, except lightweight aggregate, shall have an abrasion loss of not more than 40 percent by weight when subjected to the Los Angeles Abrasion Test, Test Method Tex-410-A, unless otherwise shown on the plans. Lightweight coarse aggregate shall have an abrasion loss of not more than 35 percent by weight when subjected to the Los Angeles Abrasion Test, Test Method Tex-410-A, unless otherwise shown on the plans. Coarse aggregate from each source shall meet the abrasion requirement specified.

Unless otherwise shown on the plans, gravel shall be so crushed to have a minimum of 85 percent of the particles retained on the No. 4 sieve with more than one crushed face, as determined by Test Method Tex-413-A (Particle Count).

(b) Coarse Aggregate for Skid Resistant Surface.

When and where shown on the plans, the coarse aggregate used in the surface or finish course must meet the general requirements and one of the following conditions:

Have a "polish value" of not less than the value shown on the plans. Where the coarse aggregates are supplied from two or more sources, the aggregate from each source shall meet the "polish value" shown on the plans prior to being combined with other aggregates. Polish values shall be determined in accordance with Test Method Tex-438-A, Part I or,

Have a "combined polish value" achieved by blending non-polishing aggregates with polishing aggregates in specific proportions as determined by Method "A" or Method "B" of Test Method Tex-438-A, Part II.

When the coarse aggregates are to be a blend of non-polishing aggregates with polishing aggregates to achieve a "combined polish value", the percent by volume of the non-polishing aggregate in the blend shall be that amount required to provide the polish value shown on the plans, when Method "A" is used. When Method "B" is used, the percent by volume of the non-polishing aggregate in the blend is determined by the formula based on the polish values of the aggregates to be blended. When indicated on the plans, the non-polishing aggregate must be equal to, or have greater resistance to loss by abrasion, than the polishing aggregate when tested by Test Method Tex-438-A, Part III.

That portion of the non-polishing aggregate retained on the No. 10 sieve shall comprise at least 20% by volume of the total aggregate. In addition, the blended aggregates shall contain non-polishing aggregates of at least the minimum percent by volume of the critical size shown below for the specified mixture.

	Type C	Type D	Type F
Ret. #4 sieve	50%	50%	
Ret. #10 sieve			50%

Specification compliance for proper proportioning of blended coarse aggregate shall be determined from representative samples obtained from the hot bins on weigh-batch or continuous mixing plants or from the cold feed immediately prior to entering the dryer-drum on the drum mix plants. Percent by volume may be determined by making a visual

separation of the materials as outlined in Test Method Tex-413-A and converting weights to volumes by appropriate methods or by testing in accordance with Test Method Tex-200-F, Part III.

When coarse aggregates from any source include appreciable quantities of materials with substantially different mineralogy the more polish-resistant aggregates must be equal or greater in differential wear resistance than other aggregates from the source. The Engineer may establish this on the basis of satisfactory experience with the source, or tests may be required in accordance with Test Method Tex-438-A, Part III.

(c) **Fine Aggregate.** The fine aggregate shall be that part of the aggregate passing the No. 10 sieve of uniform quality throughout as hereinafter specified or otherwise shown on the plans.

Fine aggregate shall consist of durable particles, free from injurious foreign matter. The plasticity index of that part of the fine aggregate passing the No. 40 seive shall be not more than 6 when tested in accordance with Test Method Tex-106-E. Fine aggregate from each source shall meet plasticity requirements.

Where stone screenings are specified for use, or authorized by the Engineer, the stone screenings shall be the result of a crushing operation and meet the following grading requirements unless otherwise shown on plans:

	Percent by Weight
Passing the 3/8″ sieve	100
Passing the No. 200 sieve	0 - 30

When authorized by the Engineer, stone screenings containing particles larger than 3/8 inch may be used but only that portion of the material passing the 3/8 inch sieve shall be considered as fulfilling the requirements for screenings when a minimum percentage of screenings is specified for a particular mixture.

(d) **Mineral Filler.** Mineral filler shall consist of thoroughly dried stone dust, slate dust, Portland cement, fly ash, or other mineral dust approved by the Engineer. The mineral filler shall be free from foreign matter.

Fines collected by baghouse or other air cleaning or dust collecting equipment may be permitted as mineral filler in the asphaltic mixture in amounts up to 2 percent, provided that the passing No. 200 master gradation limit is not exceeded. When these fines are permitted in the asphaltic mixture, they shall be introduced in the same manner prescribed for other mineral fillers.

When mineral filler is specified on the plans or when permitted by the

Engineer, it shall be controlled by a vane meter or an equivalent measuring device acceptable to the Engineer. A hopper or other acceptable storage system shall be required to maintain a constant supply of mineral filler to the measuring device.

When tested by Test Method Tex-200-F (Part I or Part III, as applicable), it shall meet the following grading requirements, unless otherwise shown on the plans:

	Percent by Weight or Volume
Passing No. 30 sieve	95 to 100
Passing No. 80 sieve, not less than	75
Passing No. 200 sieve, not less than	55

(2) Asphaltic Material.

(a) Paving Mixture. Asphalt for the paving mixture shall be of the type as determined by the Engineer and shall meet the requirements of the Item, "Asphalts, Oils and Emulsions". The grade of asphalt used shall be as designated by the Engineer. The Contractor shall notify the Engineer of the source of his asphaltic material prior to design or production of the asphaltic mixture and this source shall not be changed during the course of the project except when authorized by the Engineer.

(b) Tack Coat. Asphaltic materials shall meet the requirements of the Item, "Asphalts, Oils and Emulsions", as approved by the Engineer. A cut-back asphalt can be made by combining 50 to 70 percent by volume of the asphaltic material as specified for the type of paving mixture with 30 to 50 percent by volume of either gasoline and/or kerosene. If cut-back asphalt is used, it may, upon approval from the Engineer, be diluted by the addition of an approved grade of gasoline and/or kerosene, not to exceed 15 percent by volume.

(3) Additives. Additives to facilitate mixing and/or improve the quality of the asphaltic mixture shall be used when noted on the plans or may be used upon written permission by the Engineer.

340.3. Paving Mixtures.

(1) Mixture Design. The mix shall be designed in accordance with SDHPT Bulletin C-14 and Test Method Tex-204-F to conform with the requirements herein. The Engineer will furnish the mix design for the type(s) of mixture specified; or, the Engineer may accept a design from the Contractor which was derived using these design procedures. The Bulk Specific Gravity will be determined for each aggregate to be used in the design mixture. If the determined values vary by 0.300 or more, the mixture design will be by the Volumetric Method, Test Method Tex-204-F, Part II.

To substantiate the design, trial mixtures will be produced and tested using all of the proposed project materials and equipment prior to any

placement. The Engineer may waive trial mixtures if the same design has been proven to be in conformance with these requirements.

(2) **Stability and Density.** The mixture should be designed to produce an acceptable mixture at optimum density. The mixture produced should have the following laboratory density and stability unless otherwise shown on the plans.

Density		Percent	Stability, Percent
Min	Max	Optimum	Not less than 35 unless
95	99	97	otherwise shown on plans

Stability and density are control tests. If the laboratory stability and/or density of the mixture produced has a value lower than that specified, and in the opinion of the Engineer is not due to change in source or quality of materials, production may proceed, and the mix shall be changed until the laboratory stability and/or density falls within the specified limits and as near the optimum value as is practicable. If there is, in the opinion of the Engineer, a fundamental change in any material from that used in the design mixtures, production will be discontinued until a new design is made and substantiated by trial mixes.

(3) **Types.** The paving mixtures shall consist of a uniform mixture of coarse aggregate, fine aggregate and asphaltic material. Mineral filler, and/or additive may also be required.

When properly proportioned, the mineral aggregate shall produce a gradation which will conform to the limitations for master grading given below for the type specified unless otherwise shown on plans. The gradation will be determined in accordance with Test Method Tex-200-F (Dry Sieve Analysis) and shall be based on aggregate only. The amount of asphaltic material shall conform to the limitations shown for the paving type specified.

Type "A" (Coarse Graded Base Course):	Percent Aggregate by Weight or Volume
Passing 2″ sieve	100
Passing 1-3/4″ sieve	95 to 100
Passing 1-3/4″ sieve, retained on 7/8″ sieve	16 to 42
Passing 7/8″ sieve, retained on 3/8″ sieve	16 to 42
Passing 3/8″ sieve, retained on No. 4 sieve	10 to 26
Passing No. 4 sieve, retained on No. 10 sieve	5 to 21
Total retained on No. 10 sieve	68 to 84
Passing No. 10 sieve, retained on No. 40 sieve	5 to 21
Passing No. 40 sieve, retained on No. 80 sieve	3 to 16
Passing No. 80 sieve, retained on No. 200 sieve	2 to 16
Passing No. 200 sieve	1 to 8

The asphaltic material shall form from 3.5 to 7 percent of the mixture by weight or from 8 to 16 percent of the mixture by volume, unless specified otherwise on the plans.

Type "B" (Fine Graded Base or Leveling-Up Coarse):	Percent Aggregate by Weight or Volume
Passing 1″ sieve	100
Passing 7/8″ sieve	95 to 100
Passing 7/8″ sieve, retained on 3/8″ sieve	21 to 53
Passing 3/8″ sieve, retained on No. 4 sieve	11 to 42
Passing No. 4 sieve, retained on No. 10 sieve	5 to 26
Total retained on No. 10 sieve	58 to 74
Passing No. 10 sieve, retained on No. 40 sieve	6 to 32
Passing No. 40 sieve, retained on No. 80 sieve	4 to 21
Passing No. 80 sieve, retained on No. 200 sieve	3 to 21
Passing No. 200 sieve	1 to 8

The asphaltic material shall form from 3.5 to 7 percent of the mixture by weight or from 8 to 16 percent of the mixture by volume, unless specified otherwise on the plans.

Type "C" (Coarse Graded Surface Course):	Percent Aggregate by Weight or Volume
Passing 7/8″ sieve	100
Passing 5/8″ sieve	95 to 100
Passing 5/8″ sieve, retained on 3/8″ sieve	16 to 42
Passing 3/8″ sieve, retained on No. 4 sieve	11 to 37
Passing No. 4 sieve, retained on No. 10 sieve	11 to 32
Total retained on No. 10 sieve	54 to 74
Passing No. 10 sieve, retained on No. 40 sieve	6 to 32
Passing No. 40 sieve, retained on No. 80 sieve	4 to 27
Passing No. 80 sieve, retained on No. 200 sieve	3 to 27
Passing No. 200 sieve	1 to 8

The asphaltic material shall form from 3.5 to 7 percent of the mixture by weight or from 8 to 16 percent of the mixture by volume, unless specified otherwise on the plans.

Type "D" (Fine Graded Surface Course):	Percent Aggregate by Weight or Volume
Passing 1/2″ sieve	100
Passing 3/8″ sieve	85 to 100
Passing 3/8″ sieve, retained on No. 4 sieve	21 to 53
Passing No. 4 sieve, retained on No. 10	11 to 32
Total retained on No. 10 sieve	54 to 74
Passing No. 10 sieve, retained on No. 40 sieve	6 to 32
Passing No. 40 sieve, retained on No. 80 sieve	4 to 27
Passing No. 80 sieve, retained on No. 200 sieve	3 to 27
Passing No. 200 sieve	1 to 8

The asphaltic material shall form from 4 to 8 percent of the mixture by weight, or from 9 to 19 percent of the mixture by volume, unless specified otherwise on the plans.

Type "F" (Fine Graded Surface Course):	Percent Aggregate by Weight or Volume
Passing 3/8″ sieve	100
Passing No. 4 sieve	95 to 100
Passing No. 4 sieve, retained on No. 10 sieve	58 to 73
Passing No. 10 sieve, retained on No. 40 sieve	6 to 26
Passing No. 40 sieve, retained on No. 80 sieve	3 to 13
Passing No. 80 sieve, retained on No. 200 sieve	2 to 11
Passing No. 200 sieve	1 to 8

The asphaltic material shall form from 3.5 to 6.5 percent of the mixture by weight, or from 8 to 15 percent of the mixture by volume, unless specified otherwise on the plans.

Type "G", etc.

Grading requirements and asphalt content shall be as shown on the plans.

(4) **Tolerances.** The aggregate portion of the paving mixture produced shall not vary from the design gradation by more than the tolerances allowed herein. The material passing the No. 200 seive is further restricted to conform to the limitations for the master grading for the type specified. The asphaltic material portion of the paving mixture shall not vary from the design amount by more than the allowed tolerance and is also restricted to conform to the master limits. The method of test for determining the aggregate gradation and asphalt content of the mixture shall be Test Method Tex-210-F or other methods of proven accuracy.

	Percent by Weight or Volume as Applicable
Passing 1-3/4″ sieve, retained on 7/8″ sieve	Plus or minus 5
Passing 7/8″ sieve, retained on 3/8″ sieve	Plus or minus 5
Passing 5/8″ sieve, retained on 3/8″ sieve	Plus or minus 5
Passing 3/8″ sieve, retained on No. 4 sieve	Plus or minus 5
Passing No. 4 sieve, retained on No. 10 sieve	Plus or minus 5
Total retained on No. 10 sieve	Plus or minus 5
Passing No. 10 sieve, retained on No. 40 sieve	Plus or minus 3
Passing No. 40 sieve, retained on No. 80 sieve	Plus or minus 3
Passing No. 80 sieve, retained on No. 200 sieve	Plus or minus 3
Passing No. 200 sieve	Plus or minus 3
Asphaltic Material	Plus or minus 0.5 by wt or 1.2 by vol.

If the paving mixture produced varies from the design gradation and/or asphaltic material content by more than the above tolerances and restrictions, proper changes shall be made until the mixture meets these requirements.

340.4. Equipment.

(1) All equipment for the handling of all materials and mixing and placing of the mixture shall be maintained in good repair and operating condition and subject to approval of the Engineer. Any equipment found to be defective and potentially affecting the quality of the paving mixture will be replaced.

(2) **Mixing Plants.** Mixing plants may be the weigh-batch type, the continuous mixing type or the drum mix type. All types of plants shall be equipped with satisfactory conveyors, power units, aggregate handling equipment, bins and dust collectors and shall consist of the following essential pieces of equipment.

When shown on plans, weigh-batch and continuous types of mixing plants shall be equipped with automatic proportioning devices in accordance with the Item, "Weighing and Measuring Equipment". If automatic recording devices are required by the plans, they shall be in accordance with the Item "Weighing and Measuring Equipment".

(a) Weigh-batch Type.

Cold Aggregate Bin and Proportioning Device. The cold aggregate bin shall have at least four compartments of sufficient size to store the amount of aggregate required to keep the plant in continuous operation and of proper design to prevent overflow of material from one compartment to an-

other. The proportioning device shall be such as will provide a uniform and continuous flow of aggregate in the desired proportion to the dryer. Each aggregate shall be proportioned in a separate compartment.

Dryer. The dryer shall be of the type that continually agitates the aggregate during heating and in which the temperature can be so controlled that aggregate will not be injured in the necessary drying and heating operations required to obtain a mixture of the specified temperature. The burner, or combination of burners, and type of fuel used shall be such that in the process of heating the aggregate to the desired or specified temperature, no residue from the fuel shall adhere to the heated aggregate. A recording thermometer shall be provided which will record the temperature of the aggregate prior to the mixing operation. The dryer shall be of sufficient size to keep the plant in continuous operation.

Screening and Proportioning. The screening capacity and size of the hot aggregate bins shall be sufficient to screen and store the amount of aggregate required to properly operate the plant and keep the plant in continuous operation at full capacity. The hot bins shall be constructed so that oversize and overloaded material will be discarded through overflow chutes. Provisions shall be made to enable inspection forces to have easy and safe access to the proper location on the mixing plant where representative samples may be taken from the hot bins for testing. The aggregate shall be separated into at least four bins when producing Type "A", Type "B" and Type "C" mixtures, at least three bins when producing Type "D", and at least 2 bins when producing Type "F". If mineral filler is used, an additional bin as specified in Article 340.2(1)(d) shall be provided. These bins shall contain the following sizes of aggregates, in percentages by weight or by volume, as applicable. When producing Type G, etc., the number of bins will be shown on the plans.

Type "A" (Coarse Graded Base Course):

Bin No. 1 - will contain aggregates of which 85 to 100 percent will pass the No. 10 sieve.

Bin No. 2 - will contain aggregates of which at least 85 percent will be of such size as to pass the 1/2 inch sieve and be retained on the No. 10 sieve.

Bin No. 3 - will contain aggregates for which at least 85 percent will be of such size as to pass the 7/8 inch sieve and be retained on the 3/8 inch sieve.

Bin No. 4 - will contain aggregates of which at least 85 percent will be of such size as to pass the 2 inch sieve and be retained on the 7/8 inch sieve.

Type "B" (Fine-Graded Base or Leveling-Up Course):

Bin No. 1 - will contain aggregates of which 85 to 100 percent will pass the No. 10 sieve.

Bin No. 2 - will contain aggregates of which at least 70 percent will be of such size as to pass the No. 4 sieve and be retained on the No. 10 sieve.

Bin No. 3 - will contain aggregates for which at least 75 percent will be of such size as to pass the 3/8 inch sieve and be retained on the No. 4 sieve.

Bin No. 4 - will contain aggregates of which at least 75 percent will be of such size as to pass the 1 inch sieve and be retained on the 3/8 inch sieve.

Type "C" (Coarse-Graded Surface Course):

Bin No. 1 - will contain aggregates of which 85 to 100 percent will pass the No. 10 sieve.

Bin No. 2 - will contain aggregates of which at least 70 percent will be of such size as to pass the No. 4 sieve and be retained on the No. 10 sieve.

Bin No. 3 - will contain aggregates for which at least 75 percent will be of such size as to pass the 3/8 inch sieve and be retained on the No. 4 sieve.

Bin No. 4 - will contain aggregate of which at least 75 percent will be of such size as to pass the 7/8 inch sieve and will be retained on the 3/8 inch sieve.

Type "D" (Fine-Graded Surface Course):

Bin No. 1 - will contain aggregates of which 85 to 100 percent will pass the No. 10 sieve.

Bin No. 2 - will contain aggregates of which at least 70 percent will be of such size as to pass the No. 4 sieve and be retained on the No. 10 sieve.

Bin No. 3 - will contain aggregates of which at least 75 percent will be of such size as to pass the 1/2 inch sieve and be retained on the No. 4 sieve.

Type "F" (Fine-Graded Surface Course):

Bin No. 1 - will contain aggregates of which 85 to 100 percent will pass the No. 10 sieve.

Bin No. 2 - will contain aggregates of which at least 75 percent will be of such size as to pass the 3/8 inch sieve and be retained on the No. 10 sieve.

Type "G", etc.: As shown on plans.

Aggregate Weigh Box and Batching Scale. The aggregate weigh box and batching scales shall be of sufficient capacity to hold and weigh a complete batch of aggregate. The weigh box and scales shall conform to the requirements of the Item, "Weighing and Measuring Equipment".

Asphaltic Material Bucket and Scales. The asphaltic material bucket and scales shall be of sufficient capacity to hold and weigh the necessary asphaltic material for one batch. If the material is measured by weight, the bucket and scales shall conform to the requirements of the Item, "Weighing and Measuring Equipment".

If a pressure type flow meter is used to measure the asphaltic material, the requirements of the Item, "Weighing and Measuring Equipment", shall apply.

Mixer. The mixer shall be of the pug mill type and shall have a capacity of not less than 3,000 pounds (of natural-aggregate mixture) in a single batch unless otherwise shown on the plans. The number and position of blades shall provide a uniform mix. The mixer shall be equipped with an approved spray bar that will distribute the asphaltic material quickly and uniformly throughout the mixer. Any mixer that has a tendency to segregate the mineral aggregate or fails to secure a thorough and uniform mixture with the asphaltic material shall not be used. This shall be determined by mixing the standard batch for the required time, then dumping the mixture and taking samples from its different parts. These samples will be tested in accordance with Test Method Tex-210-F. All mixers shall be provided with an automatic time lock that will lock the discharge doors of the mixer for the required mixing period. The dump door or doors and the shaft seals of the mixer shall be tight enough to prevent spilling of aggregate or mixture from the pug mill.

Surge-Storage System. A surge-storage system may be used. It shall be adequate to minimize production interruptions during the normal day's operations. A device such as a gob hopper or other similar devices approved by the Engineer to prevent segregation in the surge-storage bin will be required. If the Contractor elects to use a surge-storage system, scales conforming to the requirements outlined herein will be required.

Scales. Scales may be standard platform truck scales or other equipment such as weight hopper (suspended) scales approved by the Engineer. All scales shall conform to the Item, "Weighing and Measuring Equipment". If truck scales are used, they shall be placed at a location approved by the Engineer. If other weighing equipment is used, the Engineer may require weight checks by truck scales for the basis of approval of the equipment.

(b) Continuous Mixing Type.

Cold Aggregate Bin and Proportioning Device. Same as for weigh-batch type of plant.

Dryer. Same as for weigh-batch type of plant.

Screening and Proportioning. Same as for weigh-batch type of plant.

Hot Aggregate Bin. The hot bins shall be so constructed that oversize and overloaded material will be discarded through an overflow chute. Hot aggregate bins that become deficient in material shall activate a switch that automatically stops the plant until the proper adjustments are made in the cold aggregate gates.

Hot Aggregate Proportioning Device. The hot aggregate proportioning device shall be so designed that when properly operated a uniform and continuous flow of aggregate into the mixer will be maintained.

Asphaltic Material Spray Bar. The asphaltic material spray bar shall be so designed that the asphalt will spray uniformly and continuously into the mixer.

Asphaltic Material Meter. An asphaltic material recording meter meeting the requirements of the Item, "Weighing and Measuring Equipment", shall be placed in the asphalt line leading to the spray bar so that the cumulative amount of asphalt used can be accurately determined. Provisions of a permanent nature shall be made for checking the accuracy of the meter output. The asphalt meter and line to the meter shall be protected with a jacket of hot oil or other approved means to maintain the temperature of the line and meter at near that temperature specified for the asphaltic material. Unless otherwise shown on the plans the temperature of the asphaltic material entering the recording meter shall be maintained at ±10 F of the temperature at which the asphalt metering pump was calibrated and set. Inability to maintain this tolerance in temperature shall result in an adjustment of the pay quantity for the asphaltic material.

Mixer. The mixer shall be of the pug mill continuous type and shall have a capacity of not less than 40 tons of mixture per hour. Any mixer that has a tendency to segregate the aggregate or fails to secure a thorough and uniform mixing of the aggregate with the asphaltic material shall not be used. The dam gate at the discharge end of the pug mixer and/or pitch of the mixing paddles shall be so adjusted to maintain a level of mixture in the pug mixer between shaft and the paddle tips (except at the discharge end).

Surge-Storage System. Same as for weigh-batch type of plant.

Scales. Same as for weigh-batch type of plant.

(c) **Drum Mix Plant.** Unless otherwise shown on the plans, the Contractor may, at his option, elect to use the drum-mixing process in the mixing of asphaltic-concrete material. The plant shall be adequately designed and constructed for the process of mixing aggregates and asphalt in the drum mixer without preheating the aggregates. The plant shall be equipped with satisfactory conveyors, power units, aggregate-handling equipment and feed controls and shall consist of the following essential pieces of equipment.

Cold-Aggregate Bin and Feed System. The number of compartments in the cold-aggregate bin shall be equal to or greater than the number of stockpiles of individual materials to be used.

The bin shall be of sufficient size to store the amount of aggregate required to keep the plant in continuous operation and of proper design to prevent overflow of material from one compartment to another. The feed system shall provide a uniform and continuous flow of aggregate in the desired proportion to the drum mixer.

The system shall provide positive weight measurement of the combined cold-aggregate feed by use of belt scales or other approved devices. Provisions of a permanent nature shall be made for checking the accuracy of the measuring device as required by the Item, "Weighing and Measuring Equipment". When a belt scale is used, mixture production shall be maintained so that the scale normally operates between 50 percent and 100 percent of its rated capacity. Belt scale operation below 50 percent of the rated capacity may be allowed by the Engineer if accuracy checks show the scale to meet the requirements of the Item, "Weighing and Measuring Equipment", at the selected rate and it can be satisfactorily demonstrated to the Engineer that mixture uniformity and quality have not been adversely affected.

Scalping Screen. A scalping screen shall be required, unless otherwise shown on the plans, and shall be located ahead of any weighing device.

Asphaltic Material Measuring System. An asphaltic material measuring device meeting the requirements of the Item, "Weighing and Measuring Equipment", shall be placed in the asphalt line leading to the drum mixer so that the cumulative amount of asphalt used can be accurately determined. Provisions of a permanent nature shall be made for checking the accuracy of the measuring device output. The asphalt measuring device and line to the measuring device shall be protected with a jacket of hot oil or other approved means to maintain the temperature of the line and measuring device near the temperature specified for the asphaltic material. Unless otherwise shown on the plans the temperature of the asphaltic material entering the measuring device shall be maintained at ±10 F of the temperature at which the asphalt measuring device was calibrated and set.

Synchronization Equipment for Feed-Control Systems. The asphaltic material feed-control shall be coupled with the total aggregate weight measuring device in such manner as to automatically vary the asphalt-feed rate as required to maintain the required proportion.

Drum Mix System. The drum mix system shall be of the type that continually agitates the aggregate-and-asphalt mixture during heating and in which the temperature can be so controlled that aggregate and asphalt will not be damaged in the necessary drying and heating operations required to obtain a mixture of the specified temperature. A continuously-recording thermometer shall be provided which will indicate the temperature of the mixture as it leaves the drum mixer.

Surge-Storage System. A surge-storage system will be required. It shall be adequate to minimize the production interruptions during the normal day's operations and shall be constructed to minimize segregation. A device such as a gob hopper or other similar devices approved by the Engineer to prevent segregation in the surge-storage bin will be required.

Scales. Scales may be standard platform truck scales, belt scales or other equipment such as weigh hopper (suspended) scales approved by the Engineer. All scales shall conform to the Item, "Weighing and Measuring Equipment". If truck scales are used, they shall be placed at a location approved by the Engineer. If other weighing equipment is used, the Engineer may require weight checks by truck scales for the basis of approval of the equipment.

(3) Asphaltic Material Heating Equipment. Asphaltic material heating equipment shall be adequate to heat the amount of asphaltic material required to the desired temperature. Asphaltic material may be heated by steam coils which shall be absolutely tight. Direct fire heating of asphaltic materials will be permitted, provided the heater used maintains a positive circulation of the asphalt throughout the heater without damage to the asphalt. Agitation with steam or air will not be permitted. The heating apparatus shall be equipped with a recording thermometer with a 24-hour chart that will record the temperature of the asphaltic material at the highest temperature.

(4) Spreading and Finishing Machine. The spreading and finishing machine shall be of a type approved by the Engineer, shall be capable of producing a surface that will meet the requirements of the typical cross section and the surface test, when required, and when the mixture is dumped directly into the finishing machine shall have adequate power to propel the delivery vehicles in a satisfactory manner. The finishing machine shall be equipped with a flexible spring and/or hydraulic type hitch sufficient in design and capacity to maintain contact between the rear wheels of the hauling equipment and the pusher rollers of the finishing machine while the mixture is being unloaded.

The use of any vehicle which requires dumping directly into the finishing machine and which the finishing machine cannot push or propel in such a manner as to obtain the desired lines and grades without resorting to hand finishing will not be allowed. Vehicles dumping directly or indirectly into the finishing machine shall be so designed and equipped that unloading into the finishing machine can be mechanically and/or automatically operated in such a manner that overloading the finishing machine being used cannot occur and the required lines and grades shall be obtained without resorting to hand finishing.

Unless otherwise shown on the plans, dumping of the asphaltic mixture in a windrow and then placing the mixture in the finishing machine with loading equipment will be permitted provided that the loading equipment is constructed and operated in such manner that substantially all of the mixture deposited on the roadbed is picked up and loaded in the finishing machine without contamination by foreign material. The loading equipment will be so designed and operated that the finishing machine being loaded will obtain the required line, grade and surface without resorting to hand finishing. Any operation of the loading equipment resulting in the accumulation and subsequent shedding of this accumulated material into the asphaltic mixture will not be permitted.

Automatic screed controls, if required, shall meet the requirements of the Item, "Automatic Screed Controls for Asphaltic Concrete Spreading and Finishing Machines".

(5) **Motor Grader.** The motor grader, if used, shall be a self-propelled power motor grader; it shall be equipped with smooth tread pneumatic tired wheels; shall have a blade length of not less than 12 feet; and shall have a wheelbase of not less than 16 feet.

(6) **Rollers.** It shall be the responsibility of the Contractor to have rolling equipment available on the job to properly compact the paving mixture in place as required without delay to the lay down operation. Rollers provided shall meet the qualifications for their type as follows:

(a) **Pneumatic Tire Rollers.** The rollers shall be acceptable medium pneumatic tire rollers conforming to the requirements of the Item, "Rolling (Pneumatic Tire)", Type B, unless otherwise specified on plans.

(b) **Two Axle Tandem Roller.** This roller shall be an acceptable power driven tandem roller weighing not less than 8 tons.

(c) **Three Wheel Roller.** This roller shall be an acceptable power driven three wheel roller weighing not less than 10 tons.

(d) **Three Axle Tandem Roller.** This roller shall be an acceptable power driven three axle roller weighing not less than 10 tons.

(e) **Trench Roller.** This roller shall be an acceptable power driven trench roller equipped with sprinkler for keeping the wheels wet and adjustable road wheel so that the roller may be kept level during rolling. The drive wheel shall be not less than 20 inches wide. The roller under working conditions shall produce 325 pounds per linear inch of roller width and be so geared that a speed of 1.8 miles per hour is obtained in low gear.

(f) **Vibratory Steel-Wheel Roller.** This roller shall have a minimum weight of 6 tons. The compactor shall be equipped with amplitude and frequency controls and shall be specifically designed to compact the material on which it is used. It shall be operated in accordance with the manufacturer's recommendations or as directed by the Engineer.

(7) **Straightedges and Templates.** When directed by the Engineer, the Contractor shall provide acceptable 10 foot straightedges for surface testing. Satisfactory templates shall be provided as required by the Engineer.

(8) **Alternate Equipment.** When permitted by the Engineer in writing, equipment other than that specified which will consistently produce satisfactory results may be used.

(9) **Inspection.** It will be the Contractor's responsibility to provide safe and accurate means to enable inspection forces to take all required samples, and to provide permanent means for checking the output of any specified metering device and to perform these calibration checks as required by the Engineer.

340.5. Stockpiling, Storage, Proportioning and Mixing.

(1) **Stockpiling of Aggregates.**

(a) **Weigh-Batch and Continuous Mixing Type Plant.**

Prior to stockpiling of aggregates, the area shall be cleaned of trash, weeds, grass and be relatively smooth and well drained. The stockpiling shall be done in a manner that will minimize aggregate degradation and prevent segregation, mixing of one stockpile with another, or allow contamination with foreign material. The plant shall have and maintain at least a two day supply of aggregates on hand and stockpiled in an acceptable manner before production can begin and shall continue through the course of the project, unless otherwise directed by the Engineer. Lightweight aggregate shall not be used until it has been determined that variation in the unit weight does not exceed the 6 percent unit weight tolerance specified herein.

Unless otherwise directed by the Engineer in writing, coarse aggregates for Types "A", "B" and "C" shall be separated into at least two stockpiles of different gradation, such as a large-coarse-aggregate and a small-coarse-aggregate stockpile and such that the grading requirements of the specified type will be met when the materials are combined in the asphaltic mixture.

No coarse-aggregate stockpile shall contain more than 15 percent by weight or by volume, as applicable, of material that will pass a No. 10 sieve except as noted on the plans; however, this minus No. 10 sieve aggregate must meet the quality tests specified in Subarticle 340.2.(1)(c). Fine aggregate stockpiles may contain coarse aggregate in amounts up to 20 percent by weight or by volume, as applicable. Suitable equipment of an acceptable size and type shall be furnished by the Contractor to work the stockpiles and prevent segregation of the aggregates.

(b) Drum Mix Plants.

When a drum mix plant is used, the following stockpiling requirements for coarse aggregates will apply in addition to those listed above.

Once a job mix design has been established in accordance with Subarticle 340.3.(1), the coarse aggregates delivered to the stockpiles shall not vary on any grading size fraction by more than plus or minus 8 percentage points from the percentage found in the samples submitted by the Contractor and upon which the job mix design was based. The intent of this requirement is to insure consistency and uniformity of the asphaltic mixture produced in the drum mix plant. Should the gradation of coarse aggregates in the stockpiles vary by more than the allowed tolerance, the Engineer may stop production and may require that new aggregates be furnished to the stockpiles that meet the gradations of the aggregates submitted for the design mix formula.

When the volume of production from a commercial plant makes sampling of all coarse aggregate delivered to the stockpiles impractical, cold feeds will be sampled to determine stockpile uniformity. Should this sampling prove the stockpiles nonuniform beyond the acceptable tolerance, separate stockpiles which meet these specifications may be required for the production of material under this item.

(2) Storage and Heating of Asphaltic Materials. The asphaltic material storage shall be ample to meet the requirements of the plant. Asphalt shall not be heated to a temperature in excess of that specified in the Item, "Asphalts, Oils, and Emulsions". All equipment used in the storage and handling of asphaltic material shall be kept in a clean condition at all times and shall be operated in such manner that there will be no contamination with foreign matter.

(3) Feeding and Drying of Aggregate. The feeding of various sizes of aggregate to the dryer shall be done through the cold aggregate bin and proportioning device in such a manner that a uniform and constant flow of materials in the required proportions will be maintained. The aggregate shall be dried and heated to the temperature necessary to produce a mixture having the specified temperature. In no case shall the aggregate be introduced into the mixing unit at a temperature more than 400 F.

(4) **Proportioning.** It shall be the responsibility of the Contractor to demonstrate to the Engineer prior to production that the various materials are being proportioned and handled properly for the type plant selected to yield an acceptable paving mixture as specified herein and approved by the Engineer

(5) **Mixing.**

(a) **Weigh-batch Mixer.** In the charging of the weigh box and in the charging of the mixer from the weigh box, such methods or devices shall be used as are necessary to secure a uniform asphaltic mixture. In introducing the batch into the mixer, all mineral aggregate shall be introduced first and shall be mixed thoroughly for a period of 5 to 20 seconds, as directed, to uniformly distribute the various sizes throughout the batch before the asphaltic material is added. The asphaltic material shall then be added and the mixing continued for a total mixing period of not less than 30 seconds. This mixing period may be increased if, in the opinion of the Engineer, the mixture is not uniform. The differential in temperature of the aggregates and the asphalt as they enter the mixer shall not exceed 25F.

Temporary storing or holding of the asphaltic mixture by the surge-storage system may be used during the normal day's operation. Overnight storage will not be permitted unless authorized in the plans or in writing by the Engineer. The mixture coming out of the surge-storage bin must be of equal quality to that coming out of the mixer.

(b) **Continuous Mixer.** The amount of aggregate and asphaltic material entering the mixer and the rate of travel through the mixer shall be so coordinated that a uniform mixture of the specified grading and asphalt content will be produced. The differential in temperature of the aggregates and the asphalt as they enter the mixer shall not exceed 25 F.

Checks on asphalt used shall be made at least twice daily by comparing the asphalt used in ten loads of completed mix as shown on the asphalt recording meter and the design amount for these ten loads. The acceptable percent of variation between the asphalt used and the design amount will be as shown on the plans or as determined by the Engineer.

Temporary storing or holding of the asphaltic mixture by the surge-storage system may be used during the normal day's operation. Overnight storage will not be permitted unless authorized in the plans or in writing by the Engineer. The mixture coming out of the surge-storage bin must be of equal quality to that coming out of the mixer.

(c) **Drum Mix Plant.** The amount of aggregate and asphaltic material entering the drum mixer and the rate of travel through the mixing unit shall be so coordinated that a uniform mixture of the specified grading and asphalt content will be produced.

Temporary storing or holding of the asphaltic mixture by the surge-

Coat". The tack coat or asphaltic concrete shall not be applied on a previously primed flexible base until the primed base has cured to the satisfaction of the Engineer.

(3) **Tack Coat.** Before the asphaltic mixture is laid, the surface upon which the tack coat is to be placed shall be cleaned thoroughly to the satisfaction of the Engineer. The surface shall be given a uniform application of tack coat using asphaltic materials of this specification. This tack coat shall be applied, as directed by the Engineer, with an approved sprayer at a rate not to exceed 0.05 gallon per square yard of surface. Where the mixture will adhere to the surface on which it is to be placed without the use of a tack coat, the tack coat may be eliminated by the Engineer. All contact surfaces of curbs and structures and all joints shall be painted with a thin uniform coat of the asphaltic material meeting the requirements for tack coat. The tack coat shall be rolled with a pneumatic tire roller when directed by the Engineer.

(4) **Transporting Asphaltic Concrete.** The asphaltic mixture, prepared as specified above, shall be hauled to the work in tight vehicles previously cleaned of all foreign material. The dispatching of the vehicles shall be arranged so that all material delivered may be placed, and all rolling shall be completed during daylight hours. In cool weather or for long hauls, canvas covers and insulating of the truck bodies may be required. The inside of the truck body may be given a light coating of oil, lime slurry or other material satisfactory to the Engineer, if necessary, to prevent mixture from adhering to the body.

(5) **Placing.**

(a) The asphaltic mixture shall be dumped and spread on the approved prepared surface with the specified spreading and finishing machine, in such manner that when properly compacted the finished pavement will be smooth, of uniform density and will meet the requirements of the typical cross sections and the surface tests. During the application of asphaltic material, care shall be taken to prevent splattering of adjacent pavement, curb and gutter and structures.

(b) In placing a level-up course with the spreading and finishing machine, line and grade shall be established by the Engineer. When approved by the Engineer, level-up courses may be spread with the specified motor grader.

(c) When the asphaltic mixture is placed in a narrow strip along the edge of an existing pavement, or used to level up small areas of an existing pavement, or placed in small irregular areas where the use of a finishing machine is not practical, the finishing machine may be eliminated when authorized by the Engineer, provided a satisfactory surface can be obtained by other approved methods.

(d) Adjacent to flush curbs, gutters, liners, and structures, the surface shall be finished uniformly high so that when compacted it will be slightly above the edge of the curb and flush structure.

(6) **Compacting.**

(a) The pavement shall be compacted thoroughly and uniformly with the necessary rollers to obtain the density, stability and cross section of the finished paving mixture meeting the requirements of the plans and specifications and the approval of the Engineer.

(b) When rolling with the three wheel, tandem, or vibratory rollers, rolling shall start longitudinally at the sides and proceed toward the center of the pavement, overlapping on successive trips by at least half the width of the rear wheel unless otherwise directed by the Engineer. Alternate trips of the roller shall be slightly different in length. On super-elevated curves, rolling shall begin at the low side and progress toward the high side unless otherwise directed by the Engineer. When rolling with vibratory steel-wheel rollers, the manufacturer's recommendation shall be followed unless directed otherwise by the Engineer. Rolling with pneumatic-tire roller shall be done as directed by the Engineer. Rolling shall be continued until no further density can be obtained and all roller marks are eliminated. The motion of the roller shall be slow enough at all times to avoid displacement of the mixture. If any displacement occurs, it shall be corrected at once by the use of rakes, and of fresh mixture where required. The roller shall not be allowed to stand on pavement which has not been fully compacted. To prevent adhesion of the surface mixture to the roller, the wheels shall be kept thoroughly moistened with water, but an excess of water will not be permitted. All rollers must be in good mechanical condition. Necessary precautions shall be taken to prevent the dropping of gasoline, oil, grease or other foreign matter on the pavement, either when the rollers are in operation or when standing.

(c) **In-Place Density.** In-place density control is required for all mixtures except thin irregular depth level-up courses. The material should be placed and compacted to either the percent of theoretical density or the percent of laboratory molded specimen density that is shown on the plans. Roadway specimens, which shall be either cores or sections of asphaltic pavement, will be tested according to Test Method Tex-207-F. When indicated on the plans, the Contractor shall be responsible for obtaining the required roadway specimens at his expense and in a manner and at locations satisfactory to the Engineer. Other methods of determining in-place density which correlate satisfactorily with results obtained from project roadway specimens may be used when approved by the Engineer

In-place density tests are compaction control tests. If the in-place density of the mixture produced has a value lower than that specified and in the

opinion of the Engineer is not due to a change in the quality of the material, production may proceed with subsequent changes in the mix and/or construction operations until the in-place density equals or exceeds the specified density. Rolling procedures and rolling sequence shall be satisfactory to the Engineer.

Regardless of the method of compaction control followed, all rolling shall be completed before the mixture temperature drops below 175 F.

(d) **Hand Tamping.** The edges of the pavement along curbs, headers and similar structures, and all places not accessible to the roller, or in such positions as will not allow thorough compaction with the rollers, shall be thoroughly compacted with lightly oiled tamps.

(e) Rolling with the trench type roller will be required on widening areas in trenches and other limited areas where satisfactory compaction cannot be obtained with the rollers specified or approved.

(7) **Surface Tests.** The surface of the pavement, after compaction, shall be smooth and true to the established line, grade and cross section, and when tested with a 10 foot straightedge placed parallel to the centerline of the roadway or tested by other equivalent and acceptable means, except as provided herein, the maximum deviation shall not exceed 1/8 inch in 10 feet, and any surface not meeting this requirement shall be corrected as directed by the Engineer. When placed on existing surfaces, the 1/8 inch deviation in 10 feet requirement may be waived by the Engineer.

(8) **Opening to Traffic.** The pavement shall be opened to traffic when directed by the Engineer. The Contractor's attention is directed to the fact that all construction traffic allowed on pavement open to the public will be subject to the State laws governing traffic on highways.

If the surface ravels or deteriorates in any manner, it will be the Contractor's responsibility to correct this condition at his expense.

340.7. Measurement.

Asphaltic concrete will be measured by the discrete weight, volumetric, composite weight or composite volumetric method.

Discrete Weight Method. Asphaltic concrete will be measured separately by the ton of 2000 pounds of "Asphalt" and "Aggregate" of the type actually used in the completed work in accordance with the plans and specifications for the project.

Measurement, if mixing is done by a continuous mixer or drum mixer, will be made on scales as specified herein.

Measurement, if mixing is done by a weigh-batch mixer, may be made on the batch scales. Records of the number of batches, batch designs and weight of "Asphalt" and "Aggregate" shall be kept. Where surge-storage

is used, measurement of material taken from the surge-storage bin will be made on truck scales or suspended hopper scales.

Volumetric Method. Asphaltic concrete will be measured separately by the ton of 2000 pounds of "Asphalt" and by the cubic yard of "Aggregate" of the type actually used in the completed and accepted work in accordance with plans and specifications for the project. The volume of aggregate in the compacted mix shall be calculated from the measured weights of asphaltic concrete by the following formula:

$$V = \frac{W}{62.4\ (27)\ G_a}$$

V = Cubic yards of compacted "Aggregate"
W = Total weight of asphaltic-concrete in pounds
G_a = Average actual specific gravity of three molded specimens as prepared by Test Method Tex-206-F and determined in accordance with Test Method Tex-207-F

If mixing is done by a continuous mixer or drum mixer, the weight "W" will be determined by scales as specified herein.

If mixing is done by a weigh-batch mixer, weight will be determined by batch scales. Records of the number of batches, batch designs and weight of asphaltic mixture shall be kept. Where surge-storage is used, measurement of material taken from the surge-storage bin will be made on truck scales or suspended hopper scales.

Composite Weight Method. Asphaltic concrete will be measured by the ton of 2000 pounds of the composite "Asphaltic Concrete" of the type actually used in the completed and accepted work in accordance with the plans and specifications for the project. The composite asphaltic concrete mixture is hereby defined as the asphalt, aggregate, additives as noted in the plans and/or approved by the Engineer, and any residual moisture which is not designated to be deducted.

Measurement, if mixing is done by a continuous mixer or drum mixer, will be made on scales as specified herein.

Measurement, if mixing is done by weigh-batch mixer, may be made on the batch scales. Records of the number of batches, batch design and weight of the composite "Asphaltic Concrete" shall be kept. Where surge-storage is used, measurement of material taken from the surge-storage bin will be made on truck scales or suspended hopper scales.

Composite Volumetric Method. The asphaltic concrete will be measured by the cubic yard of compacted "Asphaltic Concrete" of the type actually used in the completed and accepted work in accordance with the plans and specifications for the project. The composite asphaltic concrete mixture is hereby defined as the asphalt, aggregate, additives as noted in the plans

and/or approved by the Engineer, and any residual moisture which is not designated to be deducted. The volume of the composite asphaltic concrete mixture shall be calculated by the following formula:

$$V = \frac{W}{62.4\ (27)\ G_a}$$

V = Cubic yards of compacted "Asphaltic Concrete"
W = Total weight of asphaltic-concrete in pounds
G_a = Average actual specific gravity of three molded specimens as prepared by Test Method Tex-206-F and determined in accordance with Test Method Tex-207-F

If mixing is done by a continuous mixer or drum mixer, the weight "W" will be determined by scales as specified herein.

If mixing is done by a weigh-batch mixer, weight will be determined by batch scales and records of the number of batches, batch designs and weight of asphalt and aggregate shall be kept. Where surge-storage is used, measurement of material taken from the surge-storage bin will be made on truck scales or suspended hopper scales.

340.8. Payment.

(1) The work performed and materials furnished as prescribed by this item and measured as provided under "Measurement" will be paid for at the unit price bid for the items and types specified:

Measurement Method	Bid Item	Unit of Measure
Discrete Weight	Asphalt	Ton
	Aggregate	Ton
Volumetric:	Asphalt	Ton
	Aggregate	Cubic Yard
Composite Weight	Asphaltic Concrete	Ton
Composite Volumetric:	Asphaltic Concrete	Cubic Yard

The unit bid price shall be full compensation for quarrying, furnishing all materials, freight involved, for all heating, mixing, hauling, cleaning the existing base course or pavement, tack coat, placing asphaltic concrete mixture, rolling and finishing; and for all manipulations, labor, tools equipment and incidentals necessary to complete the work except prime coat when required.

(2) The prime coat, applied where required, will be measured and paid for in accordance with the provisions governing the Item, "Prime Coat".

(3) All templates, straightedges, scales and other weighing and measuring devices necessary for the proper construction, measuring and checking of the work shall be furnished, operated and maintained by the Contractor at his expense.

ITEM 350

HOT MIX-COLD LAID ASPHALTIC CONCRETE PAVEMENT

350.1. Description. This item shall consist of a base course, a leveling-up course, a surface course or any combination of these courses as shown on the plans, each to be composed of a compacted mixture of mineral aggregate and asphaltic material.

The pavement shall be constructed on the previously completed and approved subgrade, base, existing wearing surface, or in the case of a bridge, on the prepared slab or as otherwise specified herein and in accordance with the details shown on the plans.

350.2. Materials.

(1) Mineral Aggregate. The mineral aggregate shall be composed of a coarse aggregate, a fine aggregate, and if required, a mineral filler. Samples of coarse aggregate, fine aggregate and mineral filler shall be submitted in accordance with the methods prescribed in the Item, "Control of Materials" and approval of both material and of the source of supply must be obtained from the Engineer prior to delivery.

Combined mineral aggregate, prior to addition of asphalt and mineral filler, shall have a sand equivalent value of not less than 45, unless otherwise shown on plans, when sampled and tested in accordance with Test Method Tex-203-F.

Mineral aggregate from each source shall meet the tests specified herein unless otherwise specified on the plans.

(a) Coarse Aggregate, General. The coarse aggregate shall be that part of the aggregate retained on a No. 10 sieve and shall consist of clean, tough, durable particles. The aggregate shall be natural, manufactured or any combination thereof of uniform quality throughout. When specified on the plans, certain coarse-aggregate material may be required or prohibited.

That portion of the coarse aggregate composed of lightweight aggregate (defined as aggregate prepared by expanding, calcining or sintering) shall meet the following requirements, unless otherwise specified on the plans. The dry loose unit weight shall be at least 35 pounds per cubic foot when tested in accordance with Test Method Tex-404-A. Lightweight material may not be furnished from more than one source for this item without the approval of the Engineer. Lightweight materials from one source, with same or similar gradation, whose unit weights vary by more than 6 percent from that used in the batch design, may require a redesign. The Pressure Slaking Value shall not exceed 4 percent when tested in accordance with Test Method Tex-431-A. The Aggregate Freeze-thaw Loss shall not exceed 7 percent when tested in accordance with Test Method Tex-432-A.

The point of sampling for tests, Test Method Tex-217-F (Part I and Part II), will be after final processing by the mixing plant and prior to the addition of asphalt for weigh-batch and continuous plants and at the cold feed for the drum mix plants unless otherwise shown on plans.

For the coarse aggregate sampled from the hot bins and tested in accordance with Test Method Tex-217-F (Part II, Decantation), the amount of material removed shall not exceed 1 percent except for Type "FF" for which it shall not exceed 2 percent.

When it is specified that the coarse aggregate be sampled during delivery to the plant, from the stockpile, or from the cold feed, the material removed when tested in accordance with Test Method Tex-217-F (Part II, Decantation), shall not exceed 2 percent.

Unless otherwise shown on the plans, when the coarse aggregate is tested in accordance with Test Method Tex-217-F (Part I, Separation of Deleterious Material), the amount of organic matter, clay, loam or particles coated therewith or other undesirable materials shown in the plans shall not exceed 2 percent.

The coarse aggregate, except lightweight aggregate, shall have an abrasion loss of not more than 40 percent by weight when subjected to the Los Angeles Abrasion Test, Test Method Tex-410-A, unless otherwise shown on the plans. Lightweight coarse aggregate shall have an abrasion loss of not more than 35 percent by weight when subjected to the Los Angeles Abrasion Test, Test Method Tex-410-A, unless otherwise shown on the plans. Coarse aggregate from each source shall meet the abrasion requirement specified.

Unless otherwise shown on the plans, gravel shall be so crushed to have a minimum of 85 percent of the particles retained on the No. 4 sieve with more than one crushed face, as determined by Test Method Tex-413-A (Particle Count).

(b) Coarse Aggregate for Skid Resistant Surface.

When and where shown on the plans, the coarse aggregate used in the surface or finish course must meet the general requirements and one of the following conditions:

Have a "polish value" of not less than the value shown on the plans. Where the coarse aggregates are supplied from two or more sources, the aggregate from each source shall meet the "polish value" shown on the plans prior to being combined with other aggregates. Polish values shall be determined in accordance with Test Method Tex-438-A, Part I or,

Have a "combined polish value" achieved by blending non-polishing

aggregates with polishing aggregates in specific proportions as determined by Method "A" or Method "B" of Test Method Tex-438-A, Part II.

When the coarse aggregates are to be a blend of non-polishing aggregates with polishing aggregates to achieve a "combined polish value", the percent by volume of the non-polishing aggregate in the blend shall be that amount required to provide the polish value shown on the plans, when Method "A" is used. When Method "B" is used, the percent by volume of the non-polishing aggregate in the blend is determined by the formula based on the polish values of the aggregates to be blended. When indicated on the plans, the non-polishing aggregate must be equal to, or have greater resistance to loss by abrasion, than the polishing aggregate when tested by Test Method Tex-438-A, Part III.

That portion of the non-polishing aggregate retained on the No. 10 sieve shall comprise at least 20% by volume of the total aggregate. In addition, the blended aggregates shall contain non-polishing aggregates of at least the minimum percent by volume of the critical size shown below for the specified mixture.

	Type C	Type D	Type DD	Type F	Type FF
Ret. #4 sieve	50%	50%		50%	
Ret. #10 sieve			50%		50%

Specification compliance for proper proportioning of blended coarse aggregate shall be determined from representative samples obtained from the hot bins on weigh-batch or continuous mixing plants or from the cold feed immediately prior to entering the dryer-drum on the drum mix plants. Percent by volume may be determined by making a visual separation of the materials as outlined in Test Method Tex-413-A and converting weights to volumes by appropriate methods or by testing in accordance with Test Method Tex-200-F, Part III.

When coarse aggregates from any source include appreciable quantities of materials with substantially different mineralogy the more polish-resistant aggregates must be equal or greater in differential wear resistance than other aggregates from the source. The Engineer may establish this on the basis of satisfactory experience with the source or tests may be required in accordance with Test Method Tex-438-A, Part III.

(c) **Fine Aggregate.** The fine aggregate shall be that part of the aggregate passing the No. 10 sieve of uniform quality throughout as hereinafter specified or otherwise shown on the plans.

Fine aggregate shall consist of durable particles, free from injurious foreign matter. The plasticity index of that part of the fine aggregate passing the No. 40 sieve shall be not more than 6 when tested in accordance with Test Method Tex-106-E. Fine aggregate from each source shall meet plasticity requirements.

Where stone screenings are specified for use or authorized by the Engineer, the stone screenings shall be the result of a crushing operation and meet the following grading requirements unless otherwise shown on plans:

	Percent by Weight
Passing the 3/8" sieve	100
Passing the No. 200 sieve	0 - 30

When authorized by the Engineer, stone screenings containing particles larger than 3/8 inch may be used but only that portion of the material passing the 3/8 inch sieve shall be considered as fulfilling the requirements for screenings when a minimum percentage of screenings is specified for a particular mixture.

(d) Mineral Filler. Mineral filler shall consist of thoroughly dried stone dust, slate dust, Portland cement, fly ash, or other mineral dust approved by the Engineer. The mineral filler shall be free from foreign matter.

Fines collected by baghouse or other air cleaning or dust collecting equipment may be permitted as mineral filler in the asphaltic mixture in amounts up to 2 percent, provided that the passing No. 200 master gradation limit is not exceeded. When these fines are permitted in the asphaltic mixture, they shall be introduced in the same manner prescribed for other mineral fillers.

When mineral filler is specified on the plans or when permitted by the Engineer, it shall be controlled by a vane meter or an equivalent measuring device acceptable to the Engineer. A hopper or other acceptable storage system shall be required to maintain a constant supply of mineral filler to the measuring device.

When tested by Test Method Tex-200-F (Part I or Part III, as applicable), it shall meet the following grading requirements, unless otherwise shown on the plans:

	Percent by Weight or Volume
Passing No. 30 sieve	95 to 100
Passing No. 80 sieve, not less than	75
Passing No. 200 sieve, not less than	55

(2) **Asphaltic Material.**

(a) **Paving Mixture.** Asphalt for the paving mixture shall be of the type as determined by the Engineer and shall meet the requirements of the Item, "Asphalts, Oil and Emulsions". The grade of asphalt used shall be as designated by the Engineer. The Contractor shall notify the Engineer of the source of his asphaltic material prior to design or production of the asphaltic mixture and this source shall not be changed during the course of the project except when authorized by the Engineer.

(b) **Tack Coat.** Asphaltic materials shall meet the requirements of the Item, "Asphalts, Oils and Emulsions", as approved by the Engineer. A cut-back asphalt can be made by combining 50 to 70 percent by volume of the asphaltic material as specified for the type of paving mixture with 30 to 50 percent by volume of either gasoline and/or kerosene. If cut-back asphalt is used, it may, upon approval from the Engineer, be diluted by the addition of an approved grade of gasoline and/or kerosene, not to exceed 15 percent by volume.

(3) **Additives.** Additives to facilitate mixing and/or improve the quality of the asphaltic mixture shall be used when noted on the plans or may be used upon written permission by the Engineer.

350.3. Paving Mixtures.

(1) **Mixture Design.** The mix shall be designed in accordance with SDHPT Bulletin C-14 and Test Method Tex-204-F to conform with the requirements herein. The Engineer will furnish the mix design for the type(s) of mixture specified; or, the Engineer may accept a design from the Contractor which was derived using these design procedures. The Bulk Specific Gravity will be determined for each aggregate to be used in the design mixture. If the determined values vary by 0.300 or more, the mixture design will be by the Volumetric Method, Test Method Tex-204-F, Part II.

To substantiate the design, trial mixtures will be produced and tested using all of the proposed project materials and equipment prior to any placement. The Engineer may waive trial mixtures if the same design has been proven to be in conformance with these requirements.

(2) **Stability and Density.** The mixture should be designed to produce an acceptable mixture at optimum density. The mixture produced should have the following laboratory density and stability unless otherwise shown on the plans.

Density		Percent	Stability, Percent
Min	Max	Optimum	Not less than 35 unless
93	96	95	otherwise shown on plans
95*	99*	97*	

* (applicable when hot placement is specified or permitted)

Stability and density are control tests. If the laboratory stability and/or density of the mixture produced has a value lower than that specified, and in the opinion of the Engineer is not due to change in source or quality of materials, production may proceed, and the mix shall be changed until the laboratory stability and/or density falls within the specified limits and as near the optimum value as is practicable. If there is, in the opinion of the Engineer, a fundamental change in any material from that used in the design mixtures, production will be discontinued until a new design is made and substantiated by trial mixes.

(3) **Types.** The paving mixtures shall consist of a uniform mixture of coarse aggregate, fine aggregate and asphaltic material. Mineral filler, and/or additive may also be required.

When properly proportioned, the mineral aggregate shall produce a gradation which will conform to the limitations for master grading given below for the type specified unless otherwise shown on plans. The gradation will be determined in accordance with Test Method Tex-200-F (Dry Sieve Analysis) and shall be based on aggregate only. The amount of asphaltic material shall conform to the limitations shown for the paving type specified.

Type "A" (Coarse Graded Base Course):	**Percent Aggregate by Weight or Volume**
Passing 2″ sieve	100
Passing 1-3/4″ sieve	95 to 100
Passing 1-3/4″ sieve, retained on 7/8″ sieve	16 to 42
Passing 7/8″ sieve, retained on 3/8″ sieve	16 to 42
Passing 3/8″ sieve, retained on No. 4 sieve	10 to 26
Passing No. 4 sieve, retained on No. 10 sieve	5 to 21
Total retained on No. 10 sieve	68 to 84
Passing No. 10 sieve, retained on No. 40 sieve	5 to 21
Passing No. 40 sieve, retained on No. 80 sieve	3 to 16
Passing No. 80 sieve, retained on No. 200 sieve	2 to 16
Passing No. 200 sieve	1 to 8

The asphaltic material shall form from 3 to 6 percent of the mixture by weight or 7 to 14 percent of the mixture by volume, unless specified otherwise on the plans.

Type "B" (Fine Graded Base or Leveling-Up Coarse):	Percent Aggregate by Weight or Volume
Passing 1″ sieve	100
Passing 7/8″ sieve	95 to 100
Passing 7/8″ sieve, retained on 3/8″ sieve	21 to 53
Passing 3/8″ sieve, retained on No. 4 sieve	11 to 42
Passing No. 4 sieve, retained on No. 10 sieve	5 to 26
Total retained on No. 10 sieve	58 to 74
Passing No. 10 sieve, retained on No. 40 sieve	6 to 32
Passing No. 40 sieve, retained on No. 80 sieve	4 to 21
Passing No. 80 sieve, retained on No. 200 sieve	3 to 21
Passing No. 200 sieve	1 to 8

The asphaltic material shall form from 3.5 to 7 percent of the mixture by weight or from 8 to 16 percent of the mixture by volume, unless specified otherwise on the plans.

Type "C" (Coarse Graded Surface Course):	Percent Aggregate by Weight or Volume
Passing 7/8″ sieve	100
Passing 5/8″ sieve	95 to 100
Passing 5/8″ sieve, retained on 3/8″ sieve	16 to 42
Passing 3/8″ sieve, retained on No. 4 sieve	11 to 37
Passing No. 4 sieve, retained on No. 10 sieve	11 to 32
Total retained on No. 10 sieve	54 to 74
Passing No. 10 sieve, retained on No. 40 sieve	6 to 32
Passing No. 40 sieve, retained on No. 80 sieve	4 to 27
Passing No. 80 sieve, retained on No. 200 sieve	3 to 27
Passing No. 200 sieve	1 to 8

The asphaltic material shall form from 3.5 to 7 percent of the mixture by weight or 8 to 16 percent of the mixture by volume, unless specified otherwise on the plans.

Type "D" (Fine Graded Surface Course):	Percent Aggregate by Weight or Volume
Passing 1/2″ sieve	100
Passing 3/8″ sieve	85 to 100
Passing 3/8″ sieve, retained on No. 4 sieve	21 to 53
Passing No. 4 sieve, retained on No. 10 sieve	11 to 32
Total retained on No. 10 sieve	54 to 74
Passing No. 10 sieve, retained on No. 40 sieve	6 to 32
Passing No. 40 sieve, retained on No. 80 sieve	4 to 27
Passing No. 80 sieve, retained on No. 200 sieve	3 to 27
Passing No. 200 sieve	1 to 8

The asphaltic material shall form from 4 to 8 percent of the mixture by weight, or from 9 to 19 percent of the mixture by volume, unless specified otherwise on the plans.

Type "DD" (Fine Graded Surface Course):	Percent Aggregate by Weight or Volume
Passing 3/8″ sieve	100
Passing 1/4″ sieve	80 to 100
Passing 1/4″ sieve, retained on No. 10 sieve	27 to 58
Total retained on No. 10 sieve	42 to 58
Passing No. 10 sieve, retained on No. 40 sieve	6 to 32
Passing No. 40 sieve, retained on No. 80 sieve	4 to 32
Passing No. 80 sieve, retained on No. 200 sieve	3 to 32
Passing No. 200 sieve	1 to 8

The asphaltic material shall form from 4 to 7.5 percent of the mixture by weight, or from 9 to 18 percent of the mixture by volume, unless specified otherwise on the plans.

Type "F" (Fine Graded Surface Course):	Percent Aggregate by Weight or Volume
Passing 1/2″ sieve	100
Passing 3/8″ sieve	95 to 100
Passing 3/8″ sieve, retained on No. 4 sieve	10 to 37
Passing No. 4 sieve, retained on No. 10	16 to 47
Total retained on No. 10 sieve	63 to 78
Passing No. 10 sieve, retained on No. 40 sieve	5 to 26
Passing No. 40 sieve, retained on No. 80 sieve	3 to 12
Passing No. 80 sieve, retained on No. 200 sieve	2 to 10
Passing No. 200 sieve	1 to 8

The asphaltic material shall form from 3.5 to 6.5 percent of the mixture by weight, or from 8 to 15 percent of the mixture by volume, unless specified otherwise on the plans.

Type "FF" (Fine Graded Surface Course):	Percent Aggregate by Weight or Volume
Passing 3/8″ sieve	100
Passing 1/4″ sieve	95 to 100
Passing 1/4″ sieve, retained on No. 10 sieve	58 to 73
Passing No. 10 sieve, retained on No. 40 sieve	5 to 26
Passing No. 40 sieve, retained on No. 80 sieve	3 to 12
Passing No. 80 sieve, retained on No. 200 sieve	2 to 10
Passing No. 200 sieve	1 to 8

The asphaltic material shall form from 3.5 to 6.5 percent of the mixture by weight, or from 8 to 15 percent of the mixture by volume, unless specified otherwise on the plans.

Type "G", etc.

Grading requirements and asphalt content shall be as shown on the plans.

(4) **Tolerances.** The aggregate portion of the paving mixture produced shall not vary from the design gradation by more than the tolerances allowed herein. The material passing the No. 200 sieve is further restricted to conform to the limitations for the master grading for the type specified. The asphaltic material portion of the paving mixture shall not vary from the design amount by more than the allowed tolerance and is also restricted to conform to the master limits. The method of test for determining the aggregate gradation and asphalt content of the mixture shall be Test Method Tex-210-F or other methods of proven accuracy.

	Percent by Weight or Volume as Applicable
Passing 1-3/4″ sieve, retained on 7/8″ sieve	Plus or minus 5
Passing 7/8″ sieve, retained on 3/8″ sieve	Plus or minus 5
Passing 5/8″ sieve, retained on 3/8″ sieve	Plus or minus 5
Passing 3/8″ sieve, retained on No. 4 sieve	Plus or minus 5
Passing 3/8″ sieve, retained on 1/4″ sieve	Plus or minus 5
Passing No. 4 sieve, retained on No. 10 sieve	Plus or minus 5
Passing 1/4″ sieve, retained on No. 10 sieve	Plus or minus 5
Total retained on No. 10 sieve	Plus or minus 5
Passing No. 10 sieve, retained on No. 40 sieve	Plus or minus 3
Passing No. 40 sieve, retained on No. 80 sieve	Plus or minus 3
Passing No. 80 sieve, retained on No. 200 sieve	Plus or minus 3
Passing No. 200 sieve	Plus or minus 3
Asphaltic Material	Plus or minus 0.5 by wt. or 1.2 by vol.

If the paving mixture produced varies from the design gradation and/or asphaltic material content by more than the above tolerances and restrictions, proper changes shall be made until the mixture meets these requirements.

(5) **Primer.** When approved by the Engineer, the use of an asphaltic primer will be permitted. In the event the asphalt primer is used, the hydrocarbon volatile content of the asphaltic concrete, as determined by Test Method Tex-213-F, shall not exceed 0.6 percent of the mixture by weight. The asphalt content of the primer shall be included in the total asphalt content of the paving mixture.

(6) **Water**. Water in an amount not to exceed 3 percent by weight of the mixture, as determined by Test Method Tex-212-F may be used in preparing the mixture. In the event water is used in the mixing operation, adequate measuring devices as approved by the Engineer shall be used, and the water shall be administered to the mix through an approved spray bar.

When used, the primer and/or water shall be added as directed by the Engineer during the mixing.

(7) **Physical Properties of the Mixture.** The materials may be mixed on the job or at some central mixing plant and shipped ready for use. Mixtures that do not remain workable a sufficient period of time to permit unloading by normal means, proper spreading, blading and rolling will not be acceptable.

350.4. Equipment.

(1) All equipment for the handling of all materials and mixing and placing of the mixture shall be maintained in good repair and operating condition and subject to approval of the Engineer. Any equipment found to be defective and affecting the quality of the paving mixture will be replaced.

(2) **Mixing Plants**. Mixing plants may be the weigh-batch type, the continuous mixing type or the drum mix type. All types of plants shall be equipped with satisfactory conveyors, power units, aggregate handling equipment, bins and dust collectors and shall consist of the following essential pieces of equipment.

When shown on plans, weigh-batch and continuous types of mixing plants shall be equipped with automatic proportioning devices in accordance with the Item, "Weighing and Measuring Equipment". If automatic recording devices are required by the plans, they shall be in accordance with the Item, "Weighing and Measuring Equipment".

(a) Weigh-batch Type.

Cold Aggregate Bin and Proportioning Device. The cold aggregate bin shall have at least four compartments of sufficient size to store the amount of aggregate required to keep the plant in continuous operation and of proper design to prevent overflow of material from one compartment to another. The proportioning device shall be such as will provide a uniform and continuous flow of aggregate in the desired proportion to the dryer. Each aggregate shall be proportioned in a separate compartment.

Dryer. The dryer shall be of the type that continually agitates the aggregate during heating and in which the temperature can be so controlled that aggregate will not be injured in the necessary drying and heating operations required to obtain a mixture of the specified temperature. The burner, or combination of burners, and type of fuel used shall be such that

in the process of heating the aggregate to the desired or specified temperature, no residue from the fuel shall adhere to the heated aggregate. A recording thermometer shall be provided which will record the temperature of the aggregate prior to the mixing operation. The dryer shall be of sufficient size to keep the plant in continuous operation.

Screening and Proportioning. The screening capacity and size of the hot aggregate bins shall be sufficient to screen and store the amount of aggregate required to properly operate the plant and keep the plant in continuous operation at full capacity. The hot bins shall be constructed so that oversize and overloaded material will be discarded through overflow chutes. Provisions shall be made to enable inspection forces to have easy and safe access to the proper location on the mixing plant where representative samples may be taken from the hot bins for testing. The aggregate shall be separated into at least four bins when producing Type "A", Type "B" or Type "C" mixtures, at least three bins when producing Type "D" or Type "F" and at least 2 bins when producing Type "DD" or Type "FF". If mineral filler is used, an additional bin as specified in Article 350.2(1)(d) shall be provided. These bins shall contain the following sizes of aggregates, in percentages by weight or by volume, as applicable. When producing Type G, etc., the number of bins will be shown on the plans.

Type "A" (Coarse Graded Base Course):

Bin No. 1 - will contain aggregates of which 85 to 100 percent will pass the No. 10 sieve.

Bin No. 2 - will contain aggregates of which at least 85 percent will be of such size as to pass the 1/2 inch sieve and be retained on the No. 10 sieve.

Bin No. 3 - will contain aggregates of which at least 85 percent will be of such size as to pass the 7/8 inch sieve and be retained on the 3/8 inch sieve.

Bin No. 4 - will contain aggregates of which at least 85 percent will be of such size as to pass the 2 inch sieve and be retained on the 7/8 inch sieve.

Type "B" (Fine-Graded Base or Leveling-Up Course):

Bin No. 1 - will contain aggregates of which 85 to 100 percent will pass the No. 10 sieve.

Bin No. 2 - will contain aggregates of which at least 70 percent will be of such size as to pass the No. 4 sieve and be retained on the No. 10 sieve.

Bin No. 3 - will contain aggregates of which at least 75 percent will be of such size as to pass the 3/8 inch sieve and be retained on the No. 4 sieve.

Bin No. 4 - will contain aggregates of which at least 75 percent will be of such size as to pass the 1 inch sieve and be retained on the 3/8 inch sieve.

Type "C" (Coarse-Graded Surface Course):

Bin No. 1 - will contain aggregates of which 85 to 100 percent will pass the No. 10 sieve.

Bin No. 2 - will contain aggregates of which at least 70 percent will be of such size as to pass the No. 4 sieve and be retained on the No. 10 sieve.

Bin No. 3 - will contain aggregates of which at least 75 percent will be of such size as to pass the 3/8 inch sieve and be retained on the No. 4 sieve.

Bin No. 4 - will contain aggregates of which at least 75 percent will be of such size as to pass the 7/8 inch sieve and be retained on the 3/8 inch sieve.

Type "D" (Fine Graded Surface Course) and
Type "F" (Fine Graded Surface Course):

Bin No. 1 - will contain aggregates of which 85 to 100 percent by weight will pass the No. 10 sieve.

Bin No. 2 - will contain aggregates of which at least 70 percent by weight will be of such size as to pass the No. 4 sieve and be retained on the No. 10 sieve.

Bin No. 3 - will contain aggregates of which at least 75 percent by weight will be of such size as to pass the 1/2 inch sieve and be retained on the No. 4 sieve.

Type "DD" (Fine Graded Surface Course) and
Type "FF" (Fine Graded Surface Course):

Bin No. 1 - will contain aggregates of which 85 to 100 percent by weight will pass the No. 10 sieve.

Bin No. 2 - will contain aggregates of which at least 75 percent by weight will be of such size as to pass the 3/8 inch sieve and be retained on the No. 10 sieve.

Type "G", etc.: As shown on plans.

Aggregate Weigh Box and Batching Scales. The aggregate weigh box and batching scales shall be of sufficient capacity to hold and weigh a complete batch of aggregate. The weigh box and scales shall conform to the requirements of the Item, "Weighing and Measuring Equipment".

Asphaltic Material Bucket and Scales. The asphaltic material bucket and scales shall be of sufficient capacity to hold and weigh the necessary asphaltic material for one batch. If the material is measured by weight, the bucket and scales shall conform to the requirements of the Item, "Weighing and Measuring Equipment".

If a pressure type flow meter is used to measure the asphaltic material, the requirements of the Item, "Weighing and Measuring Equipment", shall apply.

Mixer. The mixer shall be of the pug mill type and shall have a capacity of not less than 3,000 pounds (of natural-aggregate mixture) in a single batch unless otherwise shown on the plans. The number and position of blades shall provide a uniform mix. The mixer shall be equipped with an approved spray bar that will distribute the asphaltic material quickly and uniformly throughout the mixer. Any mixer that has a tendency to segregate the mineral aggregate or fails to secure a thorough and uniform mixture with the asphaltic material shall not be used. This shall be determined by mixing the standard batch for the required time, then dumping the mixture and taking samples from its different parts. These samples will be tested in accordance with Test Method Tex-210-F. All mixers shall be provided with an automatic time lock that will lock the discharge doors of the mixer for the required mixing period. The dump door or doors and the shaft seals of the mixer shall be tight enough to prevent spilling of aggregate or mixture from the pug mill.

Surge-Storage System. A surge-storage system may be used. It shall be adequate to minimize production interruptions during the normal day's operations. A device such as a gob hopper or other similar devices approved by the Engineer to prevent segregation in the surge-storage bin will be required. If the Contractor elects to use a surge-storage system, scales conforming to the requirements outlined herein will be required.

Scales. Scales may be standard platform truck scales or other equipment such as weight hopper (suspended) scales approved by the Engineer. All scales shall conform to the Item, "Weighing and Measuring Equipment". If truck scales are used, they shall be placed at a location approved by the Engineer. If other weighing equipment is used, the Engineer may require weight checks by truck scales for the basis of approval of the equipment.

(b) Continuous Mixing Type.

Cold Aggregate bin and Proportioning Device. Same as for weigh-batch type of plant.

Dryer. Same as for weigh-batch type of plant.

Screening and Proportioning. Same as for weigh-batch type of plant.

Hot Aggregate Bin. The hot bins shall be so constructed that oversize and overloaded material will be discarded through an overflow chute. Hot aggregate bins that become deficient in material shall activate a switch that automatically stops the plant until the proper adjustments are made in the cold aggregate gates.

Hot Aggregate Proportioning Device. The hot aggregate proportioning device shall be so designed that when properly operated a uniform and continuous flow of aggregate into the mixer will be maintained.

Asphaltic Material Spray Bar. The asphaltic material spray bar shall be so designed that the asphalt will spray uniformly and continuously into the mixer.

Asphaltic Material Meter. An asphaltic material recording meter meeting the requirements of the Item, "Weighing and Measuring Equipment", shall be placed in the asphalt line leading to the spray bar so that the cumulative amount of asphalt used can be accurately determined. Provisions of a permanent nature shall be made for checking the accuracy of the meter output. The asphalt meter and line to the meter shall be protected with a jacket of hot oil or other approved means to maintain the temperature of the line and meter at near that temperature specified for the asphaltic material. Unless otherwise shown on the plans the temperature of the asphaltic material entering the recording meter shall be maintained at ±10 F of the temperature at which the asphalt metering pump was calibrated and set. Inability to maintain this tolerance in temperature shall result in an adjustment of the pay quantity for the asphaltic material.

Mixer. The mixer shall be of the pug mill continuous type and shall have a capacity of not less than 40 tons of mixture per hour. Any mixer that has a tendency to segregate the aggregate or fails to secure a thorough and uniform mixing of the aggregate with the asphaltic material shall not be used. The dam gate at the discharge end of the pug mixer and/or pitch of the mixing paddles shall be so adjusted to maintain a level of mixture in the pug mixer between shaft and the paddle tips (except at the discharge end).

Surge-Storage System. Same as for weigh-batch type of plant.

Scales. Same as for weigh-batch type of plant.

(c) **Drum Mix Plant.** Unless otherwise shown on the plans, the Contractor may, at his option, elect to use the drum-mixing process in the mixing of asphaltic-concrete material. The plant shall be adequately designed and constructed for the process of mixing aggregates and asphalt in the drum mixer without preheating the aggregates. The plant shall be equipped with satisfactory conveyors, power units, aggregate-handling equipment and feed controls and shall consist of the following essential pieces of equipment.

Cold-aggregate Bin and Feed System. The number of compartments in the cold-aggregate bin shall be equal to or greater than the number of stockpiles of individual materials to be used.

The bin shall be of sufficient size to store the amount of aggregate required to keep the plant in continuous operation and of proper design to prevent overflow of material from one compartment to another. The feed system shall provide a uniform and continuous flow of aggregate in the desired proportion to the drum mixer.

The system shall provide positive weight measurement of the combined cold-aggregate feed by use of belt scales or other approved devices. Provisions of a permanent nature shall be made for checking the accuracy of the measuring device as required by the Item, "Weighing and Measuring Equipment". When a belt scale is used, mixture production shall be maintained so that the scale normally operates between 50 percent and 100 percent of its rated capacity. Belt scale operation below 50 percent of the rated capacity may be allowed by the Engineer if accuracy checks show the scale to meet the requirements of the Item, "Weighing and Measuring Equipment", at the selected rate and it can be satisfactorily demonstrated to the Engineer that mixture uniformity and quality have not been adversely affected.

Scalping Screen. A scalping screen shall be required, unless otherwise shown on the plans, and shall be located ahead of any weighing device.

Asphaltic Material Measuring System. An asphaltic material measuring device meeting the requirements of the Item, "Weighing and Measuring Equipment", shall be placed in the asphalt line leading to the drum mixer so that the cumulative amount of asphalt used can be accurately determined. Provisions of a permanent nature shall be made for checking the accuracy of the measuring device output. The asphalt measuring device and line to the measuring device shall be protected with a jacket of hot oil or other approved means to maintain the temperature of the line and measuring device near the temperature specified for the asphaltic material. Unless otherwise shown on the plans the temperature of the asphaltic material entering the measuring device shall be maintained at ±10 F of the temperature at which the asphalt measuring device was calibrated and set.

Synchronization Equipment for Feed-Control Systems. The asphaltic material feed-control shall be coupled with the total aggregate weight measuring device in such manner as to automatically vary the asphalt-feed rate as required to maintain the required proportion.

Drum Mixing System. The drum mix system shall be of the type that continually agitates the aggregate-and-asphalt mixture during heating and in which the temperature can be so controlled that aggregate and asphalt will not be damaged in the necessary drying and heating operations re-

quired to obtain a mixture of the specified temeperature. A continuously-recording thermometer shall be provided which will indicate the temperature of the mixture as it leaves the drum mixer.

Surge-storage System. A surge-storage system will be required. It shall be adequate to minimize the production interruptions during the normal day's operations and shall be constructed to minimize segregation. A device such as a gob hopper or other similar devices approved by the Engineer to prevent segregation in the surge-storage bin will be required.

Scales. Scales may be standard platform truck scales, belt scales or other equipment such as weigh hopper (suspended) scales approved by the Engineer. All scales shall conform to the Item, "Weighing and Measuring Equipment". If truck scales are used, they shall be placed at a location approved by the Engineer. If other weighing equipment is used, the Engineer may require weight checks by truck scales for the basis of approval of the equipment.

(3) Asphaltic Material Heating Equipment. Asphaltic material heating equipment shall be adequate to heat the amount of asphaltic material required to the desired temperature. Asphaltic material may be heated by steam coils which shall be absolutely tight. Direct fire heating of asphaltic materials will be permitted, provided the heater used maintains a positive circulation of the asphalt throughout the heater without damage to the asphalt. Agitation with steam or air will not be permitted. The heating apparatus shall be equipped with a recording thermometer with a 24-hour chart that will record the temperature of the asphaltic material at the highest temperature.

(4) Spreading and Finishing Machine. The spreading and finishing machine shall be of a type approved by the Engineer, shall be capable of producing a surface that will meet the requirements of the typical cross section and the surface test, when required, and when the mixture is dumped directly into the finishing machine shall have adequate power to propel the delivery vehicles in a satisfactory manner. The finishing machine shall be equipped with a flexible spring and/or hydraulic type hitch sufficient in design and capacity to maintain contact between the rear wheels of the hauling equipment and the pusher rollers of the finishing machine while the mixture is being unloaded.

The use of any vehicle which requires dumping directly into the finishing machine and which the finishing machine cannot push or propel in such a manner as to obtain the desired lines and grades without resorting to hand finishing will not be allowed. Vehicles dumping directly or indirectly into the finishing machine shall be so designed and equipped that unloading into the finishing machine can be mechanically and/or automatically oper-

ated in such a manner that overloading the finishing machine being used cannot occur and the required lines and grades shall be obtained without resorting to hand finishing.

Unless otherwise shown on the plans, dumping of the asphaltic mixture in a windrow and then placing the mixture in the finishing machine with loading equipment will be permitted provided that the loading equipment is constructed and operated in such manner that substantially all of the mixture deposited on the roadbed is picked up and loaded in the finishing machine without contamination by foreign material. If being placed hot, excessive temperature loss will not be permitted. The loading equipment will be so designed and operated that the finishing machine being loaded will obtain the required line, grade and surface without resorting to hand finishing. Any operation of the loading equipment resulting in the accumulation and subsequent shedding of this accumulated material into the asphaltic mixture will not be permitted.

Automatic screed controls, if required, shall meet the requirements of the Item, "Automatic Screed Controls for Asphaltic Concrete Spreading and Finishing Machines".

(5) **Motor Grader.** The motor grader, if used, shall be a self-propelled power motor grader; it shall be equipped with smooth tread pneumatic tired wheels; shall have a blade length of not less than 12 feet; and shall have a wheel base of not less than 16 feet.

On courses applied with a blade, a motor grader shall be provided. A windrow evener box may be required for quantity control on level up courses when directed by the Engineer.

(6) **Rollers.** It shall be the responsibility of the Contractor to have rolling equipment available on the job to properly compact the paving mixture in place as required without delay to the lay down operation. Rollers provided shall meet the qualifications for their type as follows:

(a) **Pneumatic Tire Rollers.** The rollers shall be acceptable medium pneumatic tire rollers conforming to the requirements of the Item, "Rolling (Pneumatic Tire)", Type B, unless otherwise specified on plans.

(b) **Two Axle Tandem Roller.** This roller shall be an acceptable power driven tandem roller weighing not less than 8 tons.

(c) **Three Wheel Roller.** This roller shall be an acceptable power driven three wheel roller weighing not less than 10 tons.

(d) **Three Axle Tandem Roller.** This roller shall be an acceptable power driven three axle roller weighing not less than 10 tons.

(e) **Trench Roller.** This roller shall be an acceptable power driven trench roller equipped with sprinkler for keeping the wheels wet and adjust-

able road wheel so that the roller may be kept level during rolling. The drive wheel shall be not less than 20 inches wide. The roller under working conditions shall produce 325 pounds per linear inch of roller width and be so geared that a speed of 1.8 miles per hour is obtained in low gear.

(f) Vibratory Steel-Wheel Roller. This roller shall have a minimum weight of 6 tons. The compactor shall be equipped with amplitude and frequency controls and shall be specifically designed to compact the material on which it is used. It shall be operated in accordance with the manufacturer's recommendations or as directed by the Engineer.

(7) Straightedges and Templates. When directed by the Engineer, the Contractor shall provide acceptable 10 foot straightedges for surface testing. Satisfactory templates shall be provided as required by the Engineer.

(8) Alternate Equipment. When permitted by the Engineer in writing, equipment other than that specified which will consistently produce satisfactory results may be used.

(9) Inspection. It will be the Contractor's responsibility to provide safe and accurate means to enable inspection forces to take all required samples, and to provide permanent means for checking the output of any specified metering device and to perform these calibration checks as required by the Engineer.

350.5. Stockpiling, Storage, Proportioning and Mixing.

(1) Stockpiling of Aggregates.

(a) Weigh-Batch and Continuous Mixing Type Plant.

Prior to stockpiling of aggregates, the area shall be cleaned of trash, weeds, grass and be relatively smooth and well drained. The stockpiling shall be done in a manner that will minimize aggregate degradation and prevent segregation, mixing of one stockpile with another, or allow contamination with foreign material. The plant shall have and maintain at least a two day supply of aggregates on hand and stockpiled in an acceptable manner before production can begin and shall continue through the course of the project, unless otherwise directed by the Engineer. Lightweight aggregate shall not be used until it has been determined that variation in the unit weight does not exceed the 6 percent unit weight tolerance specified herein.

Unless otherwise directed by the Engineer in writing, coarse aggregates for Types "A", "B" and "C" shall be separated into at least two stockpiles of different gradation, such as a large-coarse-aggregate and a small-coarse-aggregate stockpile and such that the grading requirements of the specified type will be met when the materials are combined in the asphaltic mixture. No coarse-aggregate stockpile shall contain more than 15 percent by weight or by volume, as applicable, of material that will pass a No. 10 sieve except

as noted on the plans; however, this minus No. 10 sieve aggregate must meet the quality tests specified in Article 350.2.(1)(c). Fine aggregate stockpiles may contain coarse aggregate in amounts up to 20 percent by weight or by volume, as applicable. Suitable equipment of an acceptable size and type shall be furnished by the Contractor to work the stockpiles and prevent segregation of the aggregates.

(b) Drum Mix Plants.

When a drum mix plant is used, the following stockpiling requirements for coarse aggregates will apply in addition to those listed above.

Once a job mix design has been established in accordance with Article 350.3.(1), the coarse aggregates delivered to the stockpiles shall not vary on any grading size fraction by more than plus or minus 8 percentage points from the percentage found in the samples submitted by the Contractor and upon which the job mix design was based. The intent of this requirement is to insure consistency and uniformity of the asphaltic mixture produced in the drum mix plant. Should the gradation of coarse aggregates in the stockpiles vary by more than the allowed tolerance, the Engineer may stop production and may require that new aggregates be furnished to the stockpiles that meet the gradations of the aggregates submitted for the design mix formula.

When the volume of production from a commercial plant makes sampling of all coarse aggregate delivered to the stockpiles impractical, cold feeds will be sampled to determine stockpile uniformity. Should this sampling prove the stockpiles nonuniform beyond the acceptable tolerance, separate stockpiles which meet these specifications may be required for the production of material under this Item.

(2) **Storage and Heating of Asphaltic Materials.** The asphaltic material storage shall be ample to meet the requirements of the plant. Asphalt shall not be heated to a temperature in excess of that specified in the Item, "Asphalts, Oils, and Emulsions". All equipment used in the storage and handling of asphaltic material shall be kept in a clean condition at all times and shall be operated in such manner that there will be no contamination with foreign matter.

(3) **Feeding and Drying of Aggregate.** The feeding of various sizes of aggregate to the dryer shall be done through the cold aggregate bin and proportioning device in such a manner that a uniform and constant flow of materials in the required proportions will be maintained. The aggregate shall be dried and heated to the temperature necessary to produce a mixture having the specified temperature. In no case shall the aggregate be introduced into the mixing unit at a temperature more than 400 F.

(4) **Proportioning.** It shall be the responsibility of the Contractor to demonstrate to the Engineer prior to production that the various materials

are being proportioned and handled properly for the type plant selected to yield an acceptable paving mixture as specified herein and approved by the Engineer.

(5) **Mixing.**

(a) **Weigh-batch Mixer.** In the charging of the weigh box and in the charging of the mixer from the weigh box, such methods or devices shall be used as are necessary to secure a uniform asphaltic mixture. In introducing the batch into the mixer, all mineral aggregate shall be introduced first and shall be mixed thoroughly for a period of 5 to 20 seconds, as directed, to uniformly distribute the various sizes throughout the batch before the asphaltic material is added. The asphaltic material shall then be added and the mixing continued for a total mixing period of not less than 30 seconds. This mixing period may be increased if, in the opinion of the Engineer, the mixture is not uniform. The differential in temperature of the aggregates and the asphalt as they enter the mixer shall not exceed 25F.

Temporary storing or holding of the asphaltic mixture by the surge-storage system may be used during the normal day's operation. Overnight storage of materials to be placed hot will not be permitted unless authorized in the plans or in writing by the Engineer. The mixture coming out of the surge-storage bin must be of equal quality to that coming out of the mixer.

(b) **Continuous Mixer.** The amount of aggregate and asphaltic material entering the mixer and the rate of travel through the mixer shall be so coordinated that a uniform mixture of the specified grading and asphalt content will be produced. The differential in temperature of the aggregates and the asphalt as they enter the mixer shall not exceed 25 F.

Checks on asphalt used shall be made at least twice daily by comparing the asphalt used in ten loads of completed mix as shown on the asphalt recording meter and the design amount for these ten loads. The acceptable percent of variation between the asphalt used and the design amount will be as shown on the plans or as determined by the Engineer.

Temporary storing or holding of the asphaltic mixture by the surge-storage system may be used during the normal day's operation. Overnight storage of materials to be placed hot will not be permitted unless authorized in the plans or in writing by the Engineer. The mixture coming out of the surge-storage bin must be of equal quality to that coming out of the mixer.

(c) **Drum Mix Plant.** The amount of aggregate and asphaltic material entering the drum mixer and the rate of travel through the mixing unit shall be so coordinated that a uniform mixture of the specified grading and asphalt content will be produced.

Temporary storing or holding of the asphaltic mixture by the surge-storage system will be required during the normal day's operation. Overnight storage of materials to be placed hot will not be permitted unless

authorized in the plans or in writing by the Engineer. The mixture coming out of the surge-storage-bin must be of equal quality to that coming out of the mixer. The mixture, when discharged from the plant, shall have a moisture content not greater than 1 percent by weight unless otherwise shown on the plans and/or specified by the Engineer. The moisture content shall be determined in accordance with Test Method Tex-212-F.

(d) The mixture produced from each type of mixer shall not vary from the specified mixture by more than the tolerances and restrictions herein specified.

(e) The asphaltic mixture when placed cold shall be at a temperature between 145 F and 275 F when dumped from the mixer. The Engineer will determine the temperature within the above limitations that the mixture should be produced.

The asphaltic mixture when placed hot shall be at a temperature between 225 F and 350 F when dumped from the mixer. The Engineer will determine the temperature within the above limitations, and the mixture when dumped from the mixer shall not vary from this selected temperature more than 25 F.

350.6. Construction Methods.

(1) General. It shall be the responsibility of the Contractor to produce, transport, place and compact the specified paving mixture in accordance with these specifications and as approved by the Engineer.

The asphaltic mixture, when placed with a spreading and finishing machine, or the tack coat shall not be placed when the air temperature is below 50 F and is falling, but it may be placed when the air temperature is above 40 F and is rising. The asphaltic mixture, when placed with a motor grader, shall not be placed when the air temperature is below 60 F and is falling, but may be placed when the air temperature is above 50 F and is rising. The air temperature shall be taken in the shade away from artificial heat. When being placed hot, mat thicknesses of 1-1/2 inches and less shall not be placed when the temperature of the surface on which the mat is to be placed is below 50 F. No mixture being placed hot containing lightweight coarse aggregate shall be placed when the temperature of the surface on which the mat is to be placed is below 50 F. It is further provided that the tack coat or asphaltic mixture shall be placed only when the humidity, general weather conditions and temperature and moisture condition of the base, in the opinion of the Engineer, are suitable.

If, after being discharged from the mixer and prior to placing, the temperature of the asphaltic mixture to be placed hot is 50 F or more below the temperature established by the Engineer, all or any part of the load may be rejected and payment will not be made for the rejected material.

(2) **Prime Coat.** If a prime coat is required, it shall be applied and paid for as a separate item conforming to the requirements of the Item, "Prime Coat". The tack coat or asphaltic concrete shall not be applied on a previously primed flexible base until the primed base has cured to the satisfaction of the Engineer.

(3) **Tack Coat.** Before the asphaltic mixture is laid, the surface upon which the tack coat is to be placed shall be cleaned thoroughly to the satisfaction of the Engineer. The surface shall be given a uniform application of tack coat using asphaltic materials of this specification. This tack coat shall be applied, as directed by the Engineer, with an approved sprayer at a rate not to exceed 0.05 gallon per square yard of surface. Where the mixture will adhere to the surface on which it is to be placed without the use of a tack coat, the tack coat may be eliminated by the Engineer. All contact surfaces of curbs and structures and all joints shall be painted with a thin uniform coat of the asphaltic material meeting the requirements for tack coat. The tack coat shall be rolled with a pneumatic tire roller when directed by the Engineer.

(4) **Transporting Asphaltic Concrete.** The asphaltic mixture, prepared as specified above, shall be hauled to the work in tight vehicles previously cleaned of all foreign material. The dispatching of the vehicles shall be arranged so that all material delivered may be placed, and shall have received its initial rolling during daylight hours. In cool weather or for long hauls, canvas covers and insulating of the truck bodies may be required when the mixture is to be placed hot. The inside of the truck body may be given a light coating of oil, lime slurry or other material satisfactory to the Engineer, if necessary, to prevent mixture from adhering to the body. The material shall be loaded in such a manner as to prevent segregation.

(5) **Placing.** The mixture shall be laid only on an approved base course or pavement which has been tack-coated as previously specified and shall be free of all foreign materials. All contact surfaces of curbs and structures and all joints shall be painted with a thin, uniform coating of cut-back or emulsified asphalt as required for tack-coating the base. The mixture shall be thoroughly aerated and then spread into place with a power motor grader in a uniform layer of such depth that after compaction is complete, the requirements of the typical cross sections will have been fulfilled. Hand spreading will be permitted where the mixture is placed on narrow strips or small irregular areas. During the application of asphaltic material, care shall be taken to prevent splattering of adjacent pavement, curb and gutter and structures.

Where more than one course of pavement is to be placed and the material is to be laid cold, no succeeding course shall be placed until the preceding course has been in place for a sufficient period of time for the preceding

course to dry and cure out. The drying and curing period shall be not less than 45 days in any case, unless a variation is authorized by the Engineer in writing.

Alternate Method of Placing. When shown on the plans or directed by the Engineer in writing, the mixture may be spread with the specified spreading and finishing machine. In placing the material with a spreading and finishing machine, rolling shall be deferred for a period of time, as directed by the Engineer, to allow for volatilization. Where more than one course of pavement is to be placed and the material to be laid cold, no succeeding course shall be placed until the preceding course has been in place for a sufficient period of time for the preceding course to dry and cure out. The drying and curing period shall be not less than 45 days in any case, unless a variation is authorized by the Engineer in writing.

(6) Compacting.

(a) The pavement shall be compacted thoroughly and uniformly with the necessary rollers to obtain the density, stability and cross section of the finished paving mixture meeting the requirements of the plans and specifications and the approval of the Engineer.

(b) When rolling with the three wheel, tandem, or vibratory rollers, rolling shall start longitudinally at the sides and proceed toward the center of the pavement, overlapping on successive trips by at least half the width of the rear wheel unless otherwise directed by the Engineer. Alternate trips of the roller shall be slightly different in length. On super-elevated curves, rolling shall begin at the low side and progress toward the high side unless otherwise directed by the Engineer. When rolling with vibratory steel-wheel rollers, the manufacturer's recommendation shall be followed unless directed otherwise by the Engineer. Rolling with pneumatic-tire roller shall be done as directed by the Engineer. Rolling shall be continued until no further density can be obtained and all roller marks are eliminated. The motion of the roller shall be slow enough at all times to avoid displacement of the mixture. If any displacement occurs, it shall be corrected at once by the use of rakes, and of fresh mixture where required. The roller shall not be allowed to stand on pavement which has not been fully compacted. To prevent adhesion of the surface mixture to the roller, the wheels shall be kept thoroughly moistened with water, but an excess of water will not be permitted. All rollers must be in good mechanical condition. Necessary precautions shall be taken to prevent the dropping of gasoline, oil, grease or other foreign matter on the pavement, either when the rollers are in operation or when standing.

(c) In-Place Density. In-place density control is required for all mixtures placed hot except thin irregular depth level-up courses. The material should be placed and compacted to either the percent of theoretical density

or the percent of laboratory molded specimen density that is shown on the plans. Roadway specimens, which shall be either cores or sections of asphaltic pavement, will be tested according to Test Method Tex-207-F. When indicated on the plans, the contractor shall be responsible for obtaining the required roadway specimens at his expense and in a manner and at locations satisfactory to the Engineer. Other methods of determining in-place density which correlate satisfactorily with results obtained from project roadway specimens may be used when approved by the Engineer.

In-place density tests are compaction control tests. If the in-place density of the mixture produced has a value lower than that specified and in the opinion of the Engineer is not due to a change in the quality of the material, production may proceed with subsequent changes in the mix and/or construction operations until the in-place density equals or exceeds the specified density. Rolling procedures and rolling sequence shall be satisfactory to the Engineer.

For mixtures being placed cold, rolling patterns will be established at the beginning of the placement with the equipment necessary to give a uniform density, stability and cross-section of the finished paving mixture meeting the requirements of the plans and specifications and the approval of the Engineer. This pattern will be followed until such time as it is determined by the Engineer that it is no longer giving a satisfactory pavement. At such time, the paving operation will stop until necessary corrective measures that meet the approval of the Engineer can be accomplished.

Thin irregular level-up courses shall be compacted as directed by the Engineer.

Regardless of the method of compaction control followed, all rolling shall be completed before the mixture temperature drops below 175 F when the mixture is being placed hot.

(d) **Hand Tamping.** The edges of the pavement along curbs, headers and similar structures, and all places not accessible to the roller, or in such positions as will not allow thorough compaction with the rollers, shall be thoroughly compacted with lightly oiled tamps.

(e) Rolling with the trench type roller will be required on widening areas in trenches and other limited areas where satisfactory compaction cannot be obtained with the rollers specified or approved.

(7) **Surface Tests.** The surface of the pavement, after compaction, shall be smooth and true to the established line, grade and cross section, and when tested with a 10 foot straightedge placed parallel to the centerline of the roadway or tested by other equivalent and acceptable means, except as provided herein, the maximum deviation shall not exceed 1/8 inch in 10 feet,

and any surface not meeting this requirement shall be corrected as directed by the Engineer. When placed on existing surfaces, the 1/8 inch deviation in 10 feet requirement may be waived by the Engineer.

(8) **Opening to Traffic.** The pavement shall be opened to traffic when directed by the Engineer. The Contractor's attention is directed to the fact that all construction traffic allowed on pavement open to the public will be subject to the State laws governing traffic on highways.

If the surface ravels or deteriorates in any manner, it will be the Contractor's responsibility to correct this condition at his expense.

350.7. Measurement.

Hot mix-cold laid asphaltic concrete will be measured by the discrete weight, volumetric, composite weight or composite volumetric method.

Discrete Weight Method. Asphaltic concrete will be measured separately by the ton of 2000 pounds of "Asphalt" and "Aggregate" of the type actually used in the completed work in accordance with the plans and specifications for the project.

Measurement, if mixing is done by a continuous mixer or drum mixer, will be made on scales as specified herein.

Measurement, if mixing is done by a weigh-batch mixer, may be made on the batch scales. Records of the number of batches, batch designs and weight of "Asphalt" and "Aggregate" shall be kept. Where surge-storage is used, measurement of material taken from the surge-storage bin will be made on truck scales or suspended hopper scales.

Volumetric Method. Asphaltic concrete will be measured separately by the ton of 2000 pounds of "Asphalt" and by the cubic yard of "Aggregate" of the type actually used in the completed and accepted work in accordance with plans and specifications for the project. The volume of aggregate in the compacted mix shall be calculated from the measured weights of asphaltic concrete by the following formula:

$$V = \frac{W}{62.4\ (27)\ G_a}$$

V = Cubic yards of compacted "Aggregate"
W = Total weight of asphaltic-concrete in pounds
G_a = Average actual specific gravity of three molded specimens as prepared by Test Method Tex-206-F and determined in accordance with Test Method Tex-207-F

If mixing is done by a continuous mixer or drum mixer, the weight "W" will be determined by scales as specified herein.

If mixing is done by a weigh-batch mixer, weight will be determined by batch scales. Records of the number of batches, batch designs and weight of asphaltic mixture shall be kept. Where surge-storage is used, measurement of material taken from the surge-storage bin will be made on truck scales or suspended hopper scales.

Composite Weight Method. Asphaltic concrete will be measured by the ton of 2000 pounds of the composite "Asphaltic Concrete" of the type actually used in the completed and accepted work in accordance with the plans and specifications for the project. The composite asphaltic concrete mixture is hereby defined as the asphalt, aggregate, additives as noted in the plans and/or approved by the Engineer, and any residual moisture which is not designated to be deducted.

Measurement, if mixing is done by a continuous mixer or drum mixer, will be made on scales as specified herein.

Measurement, if mixing is done by weigh-batch mixer, may be made on the batch scales. Records of the number of batches, batch design and weight of the composite "Asphaltic Concrete" shall be kept. Where surge-storage is used, measurement of material taken from the surge-storage bin will be made on truck scales or suspended hopper scales.

Composite Volumetric Method. The asphaltic concrete will be measured by the cubic yard of compacted "Asphaltic Concrete" of the type actually used in the completed and accepted work in accordance with the plans and specifications for the project. The composite asphaltic concrete mixture is hereby defined as the asphalt, aggregate, additives as noted in the plans and/or approved by the Engineer, and any residual moisture which is not designated to be deducted. The volume of the composite asphaltic concrete mixture shall be calculated by the following formula:

$$V = \frac{W}{62.4\ (27)\ G_a}$$

V = Cubic yards of compacted "Asphaltic Concrete"
W = Total weight of asphaltic-concrete in pounds
G_a = Average actual specific gravity of three molded specimens as prepared by Test Method Tex-206-F and determined in accordance with Test Method Tex-207-F

If mixing is done by a continuous mixer or drum mixer, the weight "W" will be determined by scales as specified herein.

If mixing is done by a weigh-batch mixer, weight will be determined by batch scales and records of the number of batches, batch designs and weight of asphalt and aggregate shall be kept. Where surge-storage is used, measurement of material taken from the surge-storage bin will be made on truck scales or suspended hopper scales.

350.8. Payment.

(1) The work performed and materials furnished as prescribed by this item and measured as provided under "Measurement" will be paid for at the unit price bid for the items and types specified:

Measurement Method	Bid Item	Unit of Measure
Discrete Weight	Asphalt	Ton
	Aggregate	Ton
Volumetric:	Asphalt	Ton
	Aggregate	Cubic Yard
Composite Weight	Hot Mix-Cold Laid Asphaltic Concrete	Ton
Composite Volumetric:	Hot Mix-Cold Laid Asphaltic Concrete	Cubic Yard

The unit bid price shall be full compensation for quarrying, furnishing all materials, freight involved, for all heating, mixing, hauling, cleaning the existing base course or pavement, tack coat, placing asphaltic concrete mixture, rolling and finishing; and for all manipulations, labor, tools, equipment and incidentals necessary to complete the work except prime coat when required.

(2) The prime coat, applied where required, will be measured and paid for in accordance with the provisions governing the Item, "Prime Coat".

(3) All templates, straightedges, scales and other weighing and measuring devices necessary for the proper construction, measuring and checking of the work shall be furnished, operated and maintained by the Contractor at his expense.

ITEM 360

CONCRETE PAVEMENT
(Water Cement Ratio)

360.1. Description. This item shall consist of a pavement and/or base of Portland cement concrete, with or without reinforcement as shown on plans, with or without monolithic curbs, constructed as herein specified on the prepared subgrade or other base course in conformity with the thickness and typical cross sections shown on plans and to the lines and grades established by the Engineer.

360.2. Materials.

(1) **Cement.** All provisions of the Item, "Hydraulic Cement", shall apply. Unless otherwise shown on the plans the cement shall be either Type I, II or III Portland cement.

Type III cement shall be used when high early strength concrete is required by the plans or special provisions. If the use of high early strength cement is not specified, and the Contractor desires to use it, he shall obtain written permission of the Engineer and shall assume all additional costs incurred by the use of such cement.

(2) **Admixtures.** Unless otherwise provided in the plans or special provisions, approved types of admixtures, except high range water reducing admixtures, may be used at the rate specified by the Engineer. High range water reducing admixtures may be used only when shown on the plans. When specified on plans, air-entraining admixture will be required as directed by the Engineer. Admixtures shall not be used to replace cement. Admixtures shall comply with all the requirements of the Item "Concrete Admixtures".

(3) **Coarse Aggregate.** Coarse aggregate shall consist of durable particles of gravel, crushed blast furnace slag and/or crushed stone of reasonably uniform quality throughout, free from injurious amounts of salt, alkali, vegetable matter or other objectionable material, either free or as an adherent coating on the aggregate. It shall not contain more than 0.25 percent by weight of clay lumps, nor more than 1.0 percent by weight of shale nor more than 5.0 percent by weight of laminated and/or friable particles when tested in accordance with Test Method Tex-413-A.

Coarse aggregate shall have a wear of not more than 45 percent when tested according to Test Method Tex-410-A and, when tested by standard laboratory methods, shall meet the following grading requirements:

Retained on 1-3/4" sieve	0%
Retained on 1-1/2" sieve	0 to 5%
Retained on 3/4" sieve	30 to 65%
Retained on 3/8" sieve	70 to 90%
Retained on No. 4 sieve	95 to 100%
Loss by Decantation Test	
*Method Tex-406-A	1.0% Maximum

* In the case of aggregates made primarily from the crushing of stone, if the material finer than the 200 sieve is definitely esta-

blished to be the dust of fracture essentially free from clay or shale as established by Part III of Test Method Tex-406-A, the percent may be increased to 1.5.

Where curbs are placed separately the Contractor may elect to use the following gradation of coarse aggregate for curbs:

Retained on the 1-1/2" sieve	0%
Retained on the 3/8" sieve	5 - 30%
Retained on the No. 4 sieve	75 - 100%

Where the coarse aggregate is delivered on the job in two or more sizes or types, each type and/or size shall be batched and weighed separately.

All aggregates shall be handled and stored in such a manner as to prevent segregation and contamination by foreign substances. When segregation is apparent, the aggregate shall be remixed. At the time of its use, the aggregate shall be free from frozen material, and aggregate containing foreign materials will be rejected. Coarse aggregate that contains more than 0.5 percent free moisture by weight shall be stockpiled for at least 24 hours prior to use.

Adequate storage facilities shall be provided for all approved materials. The intermixing of nonapproved materials with approved materials either in stockpiles or in bins will not be permitted. Aggregates from different sources shall be stored in different stockpiles unless otherwise approved by the Engineer.

Aggregates shall be stockpiled in such a manner to prevent segregation and maintained as nearly as possible in a uniform condition of moisture.

Each aggregate stockpile shall be reworked with suitable equipment at such times as required by the Engineer to remix the material to provide uniformity of the stockpile.

(4) **Fine Aggregate.** Fine aggregate shall consist of sand or a combination of sands, and shall be composed of clean, hard, durable, uncoated grains. Unless otherwise shown on plans, the acid insoluble residue of the fine aggregate shall be not less than 28 percent by weight when tested in accordance with Test Method Tex-612-J.

Fine Aggregate Exclusive of Mineral Filler. Fine aggregate shall be free from injurious amounts of salt, alkali or vegetable matter. It shall not contain more than 0.5 percent by weight of clay lumps. When subjected to the color test for organic impurities, Test Method Tex-408-A, the fine aggregate shall not show a color darker than the standard.

When the fine aggregate is tested in accordance with Test Method Tex-317-D, it shall have a tensile strength of mortar equal to or greater than the strength of standard Ottawa sand mortar.

Unless specified otherwise, fine aggregate shall meet the following grading requirements:

Retained on 3/8″ sieve	0%
Retained on No. 4 sieve	0 to 5%
Retained on No. 8 sieve	0 to 20%
Retained on No. 16 sieve	15 to 50%
Retained on No. 30 sieve	35 to 75%
Retained on No. 50 sieve	65 to 90%
Retained on No. 100 sieve	90 to 100%
Retained on No. 200 sieve	97 to 100%

Fine aggregate will be subjected to the Sand Equivalent Test (Test Method Tex-203-F). The sand equivalent value shall not be less than 80, unless a higher value is shown on plans.

Mineral Filler. Mineral Filler shall consist of clean stone dust, crushed sand, crushed shell or other approved inert material. When tested in accordance with Test Method Tex-401-A, it shall meet the following requirements:

Retained on No. 30 sieve	0%
Retained on No. 200 sieve	0 to 35%

Where fine aggregate is delivered to the job in two or more sizes or types, each type and/or size of material shall be batched and weighed separately. Where mineral filler is used, it shall be batched and weighed separately. At the time of its use the fine aggregate shall be free from frozen material, and aggregate containing foreign material will be rejected.

All fine aggregate shall be stockpiled for at least 24 hours prior to use.

(5) **Mixing Water.** Water for use in concrete and for curing shall be free from oil, acids, organic matter or other deleterious substances and shall not contain more than 1,000 parts per million of chlorides as Cl nor more than 1000 parts per million of sulfates as SO_4.

Water from municipal supplies approved by the State Health Department will not require testing, but water from other sources will be sampled

and tested before use. A sample of approximately one gallon will be submitted to Materials and Tests Division, Camp Hubbard, Austin, for test.

Test procedures shall be in accordance with AASHTO Designation: T26.

(6) **Asphalt.** The bituminous material for sealing joints, when required, shall be the type and grade shown on plans and shall meet the requirements of the Item, "Asphalt, Oils and Emulsions".

(7) **Joint Filler.** Boards for expansion joint filler and for contraction and longitudinal joints shall be of the size, shape and type indicated on the plans.

(a) Boards shall be obtained from Redwood, Cypress, Gum, Southern Yellow Pine or Douglas Fir timber. They shall be sound heartwood and shall be free from sapwood, knots, clustered birdseye, checks and splits. Occasional sound or hollow birdseye, when not in clusters, will be permitted provided the board is free from any other defects that will impair its usefulness as a joint filler. With the exception of Redwood and Cypress, all boards shall have a creosote or pentachlorophenol treatment of 6 pounds per cubic foot. When oven dried at 230 F to a constant weight, the weight of the board per cubic foot (minus treatment) shall not be less than 20 pounds nor more than 35 pounds.

(b) **Asphalt Board.** Asphalt board shall be of required size and uniform thickness. When used in transverse joints, it shall conform approximately to the shape of the pavement crown as shown on plans. Asphalt board shall consist of two suitable asphalt impregnated liners filled with a mastic mixture of asphalt and vegetable fiber and/or mineral filler. Boards shall be smooth, flat and straight throughout, and shall be sufficiently rigid to permit easy installation. Boards that crack or shatter during installing and finishing operations will not be acceptable. Boards shall be furnished in lengths equal to one-half of pavement width or in lengths equal to the width between longitudinal joints and may be furnished in strips or scored sheets of the required shape. When tested in accordance with Test Method Tex-524-C the asphalt boards shall not deflect from the horizontal more than 3/4 inch in 3-1/2 inches.

(8) **Joint Sealing Material.** Unless otherwise shown on the plans, joint sealing material shall conform to the requirements for one of the classes listed herein. The material shall adhere to the sides of the concrete joint or crack and shall form an effective seal against infiltration of water and incompressibles. The material shall not crack or break when exposed to low temperatures.

(a) Class 1-a, (Two Component, Synthetic Polymer, Cold-Extruded Type). Curing is to be by polymerization and not by evaporation of solvent or fluxing of harder particles. This type is specifically designed for vertical or sloping joints and hence is not self-levelling. It shall cure sufficiently at an average temperature of 77 F ± 3 F so as not to pick up under wheels of traffic in a maximum of 3 hours if so specified, otherwise a maximum of 24 hours is acceptable. For performance requirements see Class 1-b.

(b) Class 1-b, (Two Component, Synthetic Polymer, Cold-Pourable, Self-Levelling Type). Curing is to be by polymerization and not by evaporation of solvent or fluxing of harder particles. It shall cure sufficiently at an average temperature of 77 F ± 3 F so as not to pick up under wheels of traffic in a maximum of 3 hours.

Performance Requirements. Class 1-a and 1-b when tested in accordance with Test Method Tex-525-C shall meet the above curing times and the requirements as follows:

It shall be of such consistency that it can be mixed and poured, or mixed and extruded into joints at temperatures above 60 F.

Penetration, 77 F.	
150 gm. Cone, 5 sec., max.-cm	0.90
Bond and Extension 75%, O F, 5 cycles:	
Dry Concrete Blocks	Pass
Wet Concrete Blocks	Pass
Steel Blocks...(Primed if specified by manufacturer)	Pass
Flow at 200 F	None
Water content % by weight, max	5.0
Resilience:	
Original sample min. %(cured)	50
Oven-aged at 158 F. min. %	50
For Class 1-a material only	
Cold Flow (10 min.)	None

(c) Class 2, (Hot Poured Rubber). This sealer shall be a rubber asphalt compound which when heated shall melt to the proper consistency for pouring and shall solidify on cooling at atmospheric temperatures. The sealer must be compatible with asphaltic concrete.

When tested in accordance with Test Method Tex-525-C, the sealer shall meet the following requirements:

Penetration, 77 F, 150 grams, 5 seconds, max - 90 mm
Flow (5 hours, 140 F, 75 degree incline), max - 3 mm
Resilience at 77 F, original material, min. - 60 percent
Bond (3 cycles at -20 F).... There shall be no crack in the joint sealing material or break in the bond between the sealer and the mortar blocks over 1/4 inch deep for any of the specimens after completion of the test.

(d) Class 3, (Ready-Mixed Cold-Applied Joint and Crack Sealer). This sealer shall consist of a homogeneous blend of asphalt, rubber, inert filler and a suitable solvent or solvents. The material shall be a resilient, adhesive compound capable of effectively sealing properly cleaned joints in concrete pavement against the infiltration of moisture throughout repeated cycles of contraction and expansion and which will not be picked up by vehicle tires, particularly at summer temperatures.

The material when tested in accordance with Test Method Tex-525-C shall meet the following requirements:

Penetration:	
At 77 F:	(As received) 150 grams, 5 seconds.....not less than 2.75 cm
	(After evaporation of solvent) 150 grams, 5 seconds.... not more than 2.20 cm
At 32 F:	(After evaporation of solvent) 200 grams, 60 seconds... not less than 1.00 cm
Flow:	Not more than 0.5 cm
Bond:	There shall be no cracking of the material or failure in bond between the material and the mortar test blocks during or at the end of five cycles.

(e) Class 4, (Preformed Compression Seal). The material furnished shall comply with the specification for "Preformed Polychloroprene Elastomeric Joint Seals for Concrete Pavements", ASTM Designation: D 2628 as hereafter modified.

The compression set clamp described in ASTM Designation: D 395 shall measure approximately 7" x 9" x 11/32" to permit the testing of large size seals. In lieu of spacers or shims, a double locknut adjustment may be used with the larger seals. Properly prepared thin sections may be "plied-up" to obtain the necessary thickness for specified tests.

The preformed elastomeric joint seal shall have a maximum Oil Swell of 60 percent when tested in accordance with ASTM Designation: D 471.

Acceptance shall be based upon the manufacturer's certification in accordance with ASTM Designation: D 2628, Article 8.1.1A. Certification shall be supplied in all cases, with the Engineer's option to accept or reject under Article 8.1.3, ASTM Designation: D 2628.

Use shall be made of a lubricant-adhesive in the installation of this seal. The lubricant-adhesive shall be compatible with the seal and with the concrete and shall be unaffected by the normal moisture in the concrete.

Lubricant adhesive shall be a one part moisture curing polyurethane and hydrocarbon solvent mixture with the following physical properties:

Average net weight per gallon	8.00 pounds ± 10 percent
Solids content	65 - 74 percent by weight
Adhesive to remain fluid from	5 F to 120 F
Film strength (ASTM D 412)	1200 psi
Elongation	350 percent

The manufacturer shall furnish certification as to the compliance with these physical requirements.

It shall be applied in accordance with the manufacturer's recommendations.

(f) Class 5. (Low Modulus Silicone Sealant for Concrete Pavement Joints). The material shall be furnished in a one part silicone formulation which does not require a primer for bond to concrete. A backer rod shall be required which shall be compatible with the sealant. No bond or reaction shall occur between the rod and sealant.

The material shall meet the requirements of Table I.

TABLE I

PHYSICAL PROPERTIES

Property	Requirement	Test Procedure
Flow, inches	0.2 maximum	MIL-2-8802D Section 4.8.4
Extrusion Rate, g/minute	90-250	MIL-2-8802D Section 4.8.5
Tack Free Time, 77 ± 2 F, minutes	35-75	MIL-2-8802D Section 4.8.7
Durometer Hardness, Shore A	10 minimum	ASTM 2240
Adhesive Strength: *		
Initial, 7 days cure, 77 ± 2F, psi	10-50	Tex-525-C
After Water Immersion, psi	10-50	Tex-525-C
After Heat Aging, psi	10-50	Tex-525-C
After Cycling at 0 F	10-50	Tex-525-C

* There shall be no evidence of crack, separation or other opening that at any point is over 1/8 inch deep in the sealer or between the sealer and test blocks.

Certification: The manufacturer of the joint sealant shall furnish certified test results of each lot of the joint sealer material furnished to each project. Each lot of the sealant shall be delivered in containers plainly marked with manufacturer's name or trademark and a lot number.

(9) **Load Transmission Devices for Expansion and Contraction Joints.** Approved load transmission devices shall consist of smooth, steel dowel bars of the size and type indicated on plans and shall be open-hearth, basic oxygen or electric-furnace steel conforming to the properties specified for Grade 60 in ASTM Designation: A 615. The free end of dowel bars shall be smooth and free of shearing burrs.

When required by plans, one end of each dowel bar shall be encased in an approved cap having an inside diameter of 1/16 inch greater than the diameter of the dowel bar. The cap shall be of such strength, durability and design as to provide free movement of the dowel bar and shall be approved by the Engineer prior to use. One end of the cap shall be filled with a soft felt plug or shall be void in order to permit free movement of the dowel bar for a distance equivalent to 150 percent of the width of the joint used. The dowel caps and dowel bars shall be held securely in place by bar ties as shown on plans, or an approved equivalent thereof. Mechanical methods of implanting dowel bars in the plastic concrete may be used if approved by the Engineer.

Where shown on the plans, dowel bars shall be coated with a plastic material meeting the requirements shown on the plans.

Where a red lead and oil bar coating is required by plans, the red lead may be of any standard commercial grade and the oil shall be clean and no lighter than Standard No. 30 SAE grade. Approved thinner and dryer may be added to the red lead, but the material upon application shall be of such consistency that will provide a uniform and heavy coating on the bar. Where asphalt bar coating is required by plans, the material may be any standard grade of oil asphalt and shall be applied hot. Cut-back asphalt will not be permitted for bar coating.

(10) **Metal Installing Devices for Joint Assembly.** Metal installing devices for expansion and contraction joint assemblies (such as welded wire bar chairs, bar stakes, and marker channels, channel caps, etc.) shall be as shown on plans or may be similar devices of equivalent or greater strength, approved by the Engineer, that will secure the joint assembly in correct position during the placing and finishing of concrete. Load transmission de-

vices used in joint assemblies shall be secured in position by a transverse metal brace of the type and design shown on plans, or may be secured by other approved devices of equivalent or greater strength that will provide positive mechanical connection between the brace and each unit (other than by wire tie) and prevent transverse movement of each load transmission device.

(11) **Steel Reinforcement.** Unless otherwise shown on the plans, steel reinforcing bars as required including the tie bars shall be open-hearth, basic oxygen or electric-furnace new billet steel of Grade 60 or Grade 40 for concrete reinforcement. Bars that require bending shall be Grade 40 conforming to requirements of ASTM Designation: A 615.

High yield reinforcing steel shall be either (1) open-hearth, basic oxygen or electric-furnace new billet steel conforming to the requirements of ASTM Designation: A 615 Grade 60 or (2) rail steel bars for concrete reinforcement, conforming to the requirements of ASTM Designation: A 616 Grade 60. Bars produced by piling method will not be accepted. High yield reinforcing steel bars shall be further identified by a special marking rolled into each bar. Unless otherwise designated on plans, all reinforcing steel shall be deformed bars conforming to the requirements of pertinent ASTM Specifications.

Where prefabricated deformed wire mats are specified or permitted, the wire shall be cold worked deformed steel wire conforming to the requirements of ASTM Designation: A 496, except that steel shall be made by open-hearth, electric-furnace, or basic oxygen processes. The prefabricated deformed wire mats shall conform to the requirements of ASTM Designation: A 497, except that all wires used shall be deformed and transverse wires shall project beyond the centerline of each edge longitudinal wire as specified on the plans and in these specifications. Mats that have been bent or wires dislocated or parted during shipping or project handling shall be realigned to within one-half inch of the original horizontal plane of the mat. Mats with any portion of the wires out of vertical alignment more than one-half inch after realignment and/or wires dislocated or mutilated so that, in the opinion of the Engineer, they do not represent the original mat, shall be rejected. The mats may be clamped or wired so that the mats will retain the horizontal and vertical alignment as specified by the plans or as approved by the Engineer. Deformed wire may be used for tie bars and load transfer bars that require bending. The nominal size and area and the theoretical weight of reinforcing steel wires covered by this provision are as listed in Table 2.

When fabricated steel bar or rod mats are specified, the mats shall meet the requirements of ASTM Designation: A 184.

TABLE 2

DIMENSIONAL REQUIREMENTS FOR DEFORMED STEEL WIRE FOR CONCRETE REINFORCEMENT

		NOMINAL DIMENSIONS		
Deformed Wire Size No. 1	Unit Weight Pounds Per Ft. 2	Diam. Inches 3	Cross Sectional Area Sq. Inches 4	Perimeter Inches 5
D-1	.034	.113	.01	.355
D-2	.068	.159	.02	.499
D-3	.102	.195	.03	.612
D-4	.136	.225	.04	.706
D-5	.170	.252	.05	.791
D-6	.204	.276	.06	.867
D-7	.238	.298	.07	.936
D-8	.272	.319	.08	1.002
D-9	.306	.338	.09	1.061
D-10	.340	.356	.10	1.118
D-11	.374	.374	.11	1.174
D-12	.408	.390	.12	1.225
D-13	.442	.406	.13	1.275
D-14	.476	.422	.14	1.325
D-15	.510	.437	.15	1.372
D-16	.544	.451	.16	1.416
D-17	.578	.465	.17	1.460
D-18	.612	.478	.18	1.501
D-19	.646	.491	.19	1.542
D-20	.680	.504	.20	1.583
D-21	.714	.517	.21	1.624
D-22	.748	.529	.22	1.662
D-23	.782	.541	.23	1.700
D-24	.816	.553	.24	1.737
D-25	.850	.564	.25	1.772
D-26	.884	.575	.26	1.806
D-27	.918	.586	.27	1.841
D-28	.952	.597	.28	1.876
D-29	.986	.608	.29	1.910
D-30	1.020	.618	.30	1.942
D-31	1.054	.628	.31	1.973

Col. 1 The number following the prefix D identifies the nominal cross-sectional area of the deformed wire in hundredths of a square inch. Fractional sizes are also available between the sizes listed.

Col. 2. The unit weight in pounds per foot is obtained by multiplying the cross-sectional area in square inches by 3.4.

Col. 3. The nominal diameter of a deformed wire is equivalent to the diameter of a plain wire having the same weight per foot as the deformed wire.

Col. 4. The cross-sectional area is based on the nominal diameter. The area in square inches may be calculated by dividing the weight per lineal inch of specimen in pounds by 0.2833 (weight of 1 cu. in. of steel), or by dividing the weight per lineal foot of specimen in pounds by 3.4 (weight of steel 1 in. square and 1 ft. long).

Steel wire fabric reinforcement shall be of the gage and spacing shown on the plans and shall conform to the requirements of ASTM Designation: A 82. Longitudinal and transverse wires shall be electrically welded together at all points of intersection and the welds shall be of sufficient strength that they will not be broken during handling or placing. All welding and fabrication of the fabric sheets shall conform to the requirements of ASTM Designation: A 185. Welded steel wire fabric shall be furnished in sheets as per plan dimensions, and steel having been previously bundled into rolls will not be accepted. An approved hinge will be permitted in each sheet to provide for folding the sheet longitudinally. When wire fabric is used, it will replace only the longitudinal and transverse bars. The tie bars and load transmission units at joints will not be affected.

(12) **Polyethylene Film.** Polyethylene film shall be opaque pigmented white in color, and shall be manufactured from virgin resin without additives or scrap. It shall be sufficiently strong and tough to permit its use under the conditions existing on highway paving work without being torn or otherwise rendered unfit for the purpose during the curing period. The film shall have a minimum thickness of 4 mils (0.004 inch), shall have a minimum tensile strength of 1,700 psi at 77 F in the longitudinal direction and 1,200 psi at 77 F in the transverse direction and shall have a minimum elongation of 200 percent at 77 F in the longitudinal direction and 150 percent at 77 F in the transverse direction. The permissible percentage moisture loss shall not exceed 2 percent after 24 hours and 4 percent after 72 hours. Tests for tensile strength and elongation will be conducted in accordance with ASTM Designation: D 882, Method A. Tests for moisture retention will be conducted in accordance with ASTM Designation: C 156.

(13) **Membrane Curing Compound.** The membrane curing compound shall comply with the requirements of the Item, "Membrane Curing", Type 2, Class A.

(14) **Asphalt Curing.** Where emulsified asphalt is used for curing concrete base, the material shall conform to the Item, "Asphalts, Oils and Emulsions", for the type and grade shown on the plans.

(15) **Cotton Mats.** The mats shall be composed of a single layer of cotton filler completely enclosed in a cover of cotton cloth. The cotton filler shall be of low grade cotton, cotton linters or such cotton waste as comber noils or card flat strips. The mats shall contain not less than 3/4 of a pound of cotton filler per square yard of mat uniformly distributed. The cotton cloth used for covering materials shall weigh not less than 6 ounces per square yard.

All mats shall be stitched longitudinally with continuous parallel rows of stitching at intervals of not more than 4 inches or shall be tufted both transversely and longitudinally at intervals of not more than 3 inches. The sewing or tufting shall not be done so tightly that the mat will not contact the surface of the pavement at all points when saturated with water.

To insure the complete covering of the pavement where the mats fit together, there shall be a flap extending all along one side of each mat. This flap shall be composed of two thicknesses of the cover material and shall be at least 6 inches in width.

Each mat, after shrinkage, shall be at least 6 inches longer than the width of the pavement to be cured.

(16) **Waterproofed Paper.** Waterproofed paper used for the curing of concrete pavement shall be of a type and quality approved by the Engineer. It shall be sufficiently strong and tough to permit its use under the conditions existing on highway paving work without being torn or otherwise rendered unfit for the purpose during the curing period. The paper covering shall be maintained in place continuously for not less than the specified curing period.

360.3. Equipment.

(1) **General.** All equipment necessary for the construction of this item shall be on the project and shall be approved by the Engineer as to condition before the Contractor will be permitted to begin construction operations on which the equipment is to be used. When approved by the Engineer in writing, a commercial or independently operated batching plant for measuring materials outside the limits of the project may be used.

(2) **Aggregate Weighing Equipment.** Aggregate bins and scales shall conform to the Item, "Weighing and Measuring Equipment".

(3) **Cement Weighing Equipment.** Where bulk cement is used, it shall be batched by weight and the scales shall conform to the requirements of the Item, "Weighing and Measuring Equipment".

(4) **Mixer.** The mixer furnished may be either a paving mixer (operated at the site of the construction or centrally located), a stationary mixer (central mixer) or a paving mixer (truck mounted) that will produce adequately mixed concrete meeting the specified requirements. The mixer, or mixers, shall conform to the following requirements:

Each mixer shall have attached in a prominent place a manufacturer's plate showing the rated capacity of the drum in terms of volume of mixed concrete and the recommended speed of rotation of the mixing drum or blades.

The stationary mixer (central mixer) or truck-mounted paving mixer shall be operated at the manufacturer's recommended speed.

The size of the paving mixer shall not be less than that of a 27-E paver, as established by the Mixer Manufacturer's Bureau of the Associated General Contractors. The paving mixer shall be operated at a drum speed of not less than 16 revolutions per minute and not more than 22 revolutions per minute. Pick-up and throw-over blades in the drum of the mixer shall be replaced when worn down 3/4 inch or more.

Each truck-mounted paving mixer shall be approved by the Engineer prior to use on the project. It shall be classified as a "paving mixer" by the manufacturer and shall be so designed that a uniform and low slump concrete (approximately 1-1/2 inch slump) can be mixed without segregation. The mixer shall be capable of discharging the low slump concrete at a speed of 10 seconds per cubic yard or faster.

Each mixer shall be equipped with an approved automatic device for satisfactorily timing the mix and locking the discharging device in order to prevent the discharging of the mixer before the end of the required mixing period. This timing device shall operate a sounding device to signal plainly the completion of the mixing time. When permitted by the Engineer, a light signal device may be used.

Multiple drum mixers will be permitted provided their operation is properly synchronized. The mixing time shall be determined exclusive of the time required to transfer concrete from one drum to the next drum.

Each mixer shall be equipped with a water measuring device so constructed that it will measure the water within 1 percent of the total amount required for each batch. Unless the water is to be weighed, the water measuring equipment shall include an auxiliary tank with a capacity greater than that of the measuring tank, and from which the measuring tank will be filled by gravity flow. The measuring tank shall be open to the atmosphere and shall be so placed and constructed that the water for a batch can be discharged into a calibrated tank or weighing device for checking the accuracy of water measurement without seriously delaying the paving operations. The Contractor shall have a calibrated tank or weighing device available at all times at a location satisfactory to the Engineer.

If a paving mixer is furnished and operated at the site of construction, it shall be equipped with a power controlled boom and bucket, so designed as to permit uniform distribution of the concrete for the full width between pavement forms. Alternate equipment for distributing concrete may be substituted when approved by the Engineer in writing, provided uniform distribution is obtained without segregation.

If central mixed concrete is used on the project, the Contractor shall provide equipment designed to provide uniform distribution of the concrete for the full width between pavement forms without segregation.

A transit mixer conforming to the Item, "Ready-Mix Plants", may be used for mixing concrete for pavement only when specifically permitted by a note on the plans except that ready-mix concrete may be used for curbs, irregular sections and/or small placements such as turnouts and leaveouts.

(5) **Hauling Equipment.** Batch hauling equipment for the transportation of measured materials from the batching plant to the mixer shall be equipped with tight covers and shall be used when directed by the Engineer to prevent excessive evaporation of moisture or any loss of material.

If a central mixer is used, concrete may be transported to the point of delivery in truck agitators or non-agitating trucks.

Agitator trucks shall conform to one of the following:

(a) Horizontal axis, revolving drum.

(b) Inclined axis, revolving drum.

(c) Open top, revolving blade or paddle.

(d) Alternate agitating hauling equipment approved by the Engineer in writing.

The drum or agitating blades shall be actuated by an engine mounted as an integral part of the unit for the purpose of rotating the drum or agitating blades. It shall be capable of being governed accurately for the desired speed of rotation and be in satisfactory working conditon. As an exception, where the truck agitator is equipped with a transmission that will govern the speed of the drum or agitating blades within the specified rpm, no separate engine for rotating the drum will be required.

Truck agitators shall be equipped with facilities to readily permit access for inspection, cleaning and repair of blades.

Each truck agitator shall have attached, in a prominent place, by the manufacturer, a metal plate or plates on which are plainly marked the various uses for which the unit is designed. The data shall include speed of rotation of drum or agitating blades for agitation and the capacity of the unit.

If a truck-mounted paving mixer is used, it may be used to transport the concrete after mixing is complete.

If non-agitator trucks are used, they shall conform to the following requirements:

The bed of the non-agitating hauling equipment shall be a smooth, mortar-tight, metal container. The hauling equipment shall be capable of delivering the concrete to site of the work in a thoroughly mixed and uniform mass and capable of discharging the concrete at a satisfactory controlled rate without segregation.

If, in the opinion of the Engineer, any appreciable segregation or accumulation of excess water and/or mortar occurs on the surface of the concrete, this may be cause for rejection and this method of transporting the concrete to the point of delivery shall be suspended as directed by the Engineer.

(6) **Subgrade or Subbase Planer and Templates.** Unless a stabilized subbase is provided, an approved subbase planer shall be provided, mounted on visible rollers riding on the forms, and having adjustable cutting blades which shall trim the subgrade to the exact section shown on the plans. The planer frame shall be heavy enough to remain on the forms at all times and shall be of such strength and rigidity that, under a test made by changing the support from the wheels to the center, it shall not develop a deflection of more than 1/8 inch. Tractive power equipment used to pull the planer shall not be such as to produce ruts or indentations in the subgrade.

When the slipform method of paving is to be used, the subgrade planer will be operated on a prepared track grade or controlled by an electronic sensor system operated from a "string line" that establishes the horizontal alignment and the elevation of the subbase.

A template for checking the contour of the subbase shall be provided and operated by the Contractor. The template shall rest upon the side forms and shall be of such strength and rigidity that, under a test made by changing the support to the center, it shall not show a deflection of more than 1/8 inch. It shall be provided with accurately adjustable rods projecting downward to the subgrade at 1-foot intervals, and these rods shall be adjusted to the required cross section of the bottom of the slab when the template is resting upon the side forms. Where stabilized subbase is provided, use of a scratch template will be required.

(7) **Forms.** Side forms shall be of metal of approved cross section. The preferred depth of the form shall be equal to the required edge thickness of the pavement. Forms with depth greater or less than the required edge thickness of the pavement will be permitted provided the difference between the form depth and the edge thickness is not greater than 1 inch, and

further provided that forms of a depth less than the pavement edge are brought to the required edge thickness by securely attaching metal strips of approved section to the bottom of the form. Longitudinal hardwood strips not greater than one inch in thickness may be used in lieu of metal strips. If permitted by the Engineer, approved cement grout may be used to raise the forms to the required grade. The grout shall be completely removed before placing an adjacent lane of pavement

The length of form sections shall not be less than 10 feet, and each section shall provide for staking in position with not less than three pins. Flexible or curved forms of wood or metal of proper radius shall be used for curves of 200-foot radius or less. Forms shall be of ample strength and shall be provided with adequate devices for secure setting so that when in place they will withstand, without visible springing or settlement, the impact and vibration of the spreading and finishing machinery. In no case shall the base be less than 8 inches for a form 8 inches or more in height. The forms shall be free from warps, bends or kinks, and shall be sufficiently true to provide a reasonably straight edge on the concrete and the top of each form section, and when tested with a straight edge shall conform to the requirements specified for the surface of the completed pavement. Sufficient forms shall be provided for satisfactory prosecution of the work.

Outside curb forms shall be of wood or metal of a section satisfactory to the Engineer, straight, free of warp, and shall be of a depth at least equal to the depth of the curb. They shall be mounted on the paving forms and securely attached thereto and maintained in true position during the placing of the concrete. Inside curb forms, if required, shall be of approved material and of such design as to provide the curb required and shall be rigidly attached to the outside forms.

(8) **Concrete Spreader.** Use of a concrete spreader shall be required and it shall be a self-propelled machine having sufficient power and traction to spread and strike off concrete without slippage on the forms. It shall be equipped with a power driven device for spreading the concrete uniformly between the forms. The spreading device may be either a reciprocating blade, a screw conveyor or a belt conveyor. The spreader shall be capable of striking off the surface of the concrete between the forms in the longitudinal direction of the slab at any required elevation.

Mechanically-operated concrete spreaders of other designs, which uniformly distribute the concrete with a minimum of segregation, may be used when approved by the Engineer.

(9) **Slipform Paver.** Unless otherwise shown on the plans, the concrete may be placed with a slipform paver. This paver shall be equipped with a longitudinal transangular finishing float adjustable to crown and grade.

The float shall extend across the pavement practically to the side forms and/or the edge of slab. A "string line" shall be used to provide grade control for the paver, unless otherwise shown on the plans.

(10) Mechanical Vibratory Equipment. All concrete placed for pavement shall be consolidated by approved mechanical vibrators operated ahead of the transverse finishing machine and designed to vibrate the concrete internally and/or from the surface. Unless otherwise shown on the plans, vibrators of the surface-pan type will be used for two-lift placement of concrete and the internal type will be used for full-depth placement and both type vibrators shall be furnished and may be used concurrently at the discretion of the Engineer. Vibratory members shall extend across the pavement practically to, but shall not come in contact with, the side forms. Mechanically-operated vibrators shall be mounted in such manner as to not interfere with the transverse or longitudinal joints.

The internal-type vibrators shall be spaced at not more than 24 inches and shall be equipped with synchronized vibratory units. Separate vibratory units shall be spaced at sufficiently close intervals to provide uniform vibration and consolidation to the entire width of the pavement. The frequency in air of the internal spud type vibratory units shall be not less than 8,000 cycles per minute and not less than 5,000 cycles per minute for tube types and the method of operation shall be as directed by the Engineer. The Contractor shall have a satisfactory tachometer available for checking the vibratory elements.

The pavement vibrators shall not be used to level or spread the concrete but shall be used only for purposes of consolidation. The vibrators will not be operated where the surface of the concrete, as spread, is below the elevation of the finished surface of the pavement, except for the first lift of concrete where the double strike-off method of placement is employed, and the vibrators shall not be operated for more than 15 seconds while the machine upon which they are installed is standing still.

The pan-type vibratory units shall apply the vibrating impulses directly to the surface of the concrete. The operating frequency shall be not less than 3,500 cycles, nor more than 4,200 cycles per minute in air. The Contractor shall have a satisfactory tachometer available for checking the speed of the vibratory elements.

Approved hand manipulated mechanical vibrators shall be furnished in the number required for provision of proper consolidation of the concrete along forms, at joints and in areas not covered by mechanically controlled vibrators. These vibrators shall be sufficiently rigid to insure control of the operating position of the vibrating head.

(11) Finishing Equipment.

Transverse Finishing Machine. The transverse finishing machine shall be provided with two screeds accurately adjusted to the crown of the pavement, shall be power driven and mounted in a substantial frame equipped to ride on the forms, and shall be so designed and operated as to strike off and consolidate the concrete.

Finishing machines shall be maintained in a tight and good operating condition, accurately adjusted to the required crown or profile, and free from deflection, wobble, or vibration tending to affect the precision of finish. Machines failing to meet these requirements will be condemned by the Engineer, and the Contractor shall provide approved equipment.

Where hand-finishing is permitted under this specification, the Contractor shall provide a strike template and a tamping template both of 4 by 10 inch lumber or equivalent metal section and at least 2 feet longer than the width of the pavement. Both templates shall conform to the crown section of the pavement, and the tamp, if of wood, shall have a steel face not less than 3/8 inch in thickness. The Contractor shall also provide a longitudinal float of approved design and not less than 14 feet in length.

The Contractor shall furnish, operate and maintain at least two standard 10-foot steel straightedges.

The Contractor shall furnish a sufficient number of bridges equipped to ride on the forms and span the pavement for finishing operations and for the installation and finishing of joints. All necessary finishing and edging tools shall be furnished as may be required to complete the pavement in accordance with plans.

360.4. Proportioning and Design of Concrete.

(1) Proportions. Concrete shall be composed of Portland cement, fine aggregate, coarse aggregate, mineral filler and/or admixture, if used, and water.

(2) Concrete Strength. The concrete mix will be designed to produce a minimum average flexural strength (modulus of rupture) of 650 pounds per square inch at the age of 7 days. Unless otherwise shown on plans the concrete shall contain not less than five sacks of cement per cubic yard of concrete. The water-cement ratio (net gallons of water per sack of 94 pounds of cement) shall not exceed 6.25 gallons/sack. Concrete specimens shall be prepared, cured and tested as outlined in SDHPT Bulletin C-11.

(3) Concrete Strength for High Strength Pavement. Where high strength concrete pavement is required, the concrete mix will be designed to produce a minimum average flexural strength of 700 pounds per square inch at the age of 7 days. The concrete shall contain not less than five sacks

of cement per cubic yard of concrete. The water-cement ratio for this design shall not exceed 6.25 gallons/sack. Concrete specimens shall be prepared, cured and tested as outlined in SDHPT Bulletin C-11.

(4) **Workability of Concrete.** Concrete shall be uniformly plastic, cohesive and workable. Workable concrete is defined as concrete which can be placed without honeycomb and without voids in the surface of the pavement after the specified finishing machine has been over a given area twice. Workability shall be obtained without producing a condition such that free water appears on the surface of the slab when being finished as specified. Where water appears on the surface of the concrete after finishing and this condition cannot be corrected by reasonable adjustment in the batch design, the bleeding will be immediately corrected by one of the following measures or a combination of two or more of the following listed measures:

(a) Redesign of the batch.

(b) Addition of mineral filler to fine aggregate.

(c) Increase of cement content.

(d) Use of an approved air-entraining agent or other approved admixture.

In the event that the measures taken do not eliminate the bleeding immediately, concrete placement operations will be suspended, as directed by the Engineer, by placing a bulkhead or "header" according to details shown on the plans, and according to applicable requirements for intentional stoppage of placement in Subarticle 360.6(5) of this specification and will remain suspended until such time as additional trial mixes demonstrate that a non-bleeding batch design has been achieved. Failing to achieve a satisfactory laboratory batch design, the Contractor will be required to use different materials and to submit samples thereof for additional trial mixes and pilot beams as specified in SDHPT Bulletin C-11.

The mix will be designed to produce concrete which will have a slump of 1-1/2 inches when tested in accordance with SDHPT Bulletin C-11. The slump shall not be less than 1 inch nor more than 3 inches.

(5) **Mix Design.** It shall be the responsibility of the Contractor to furnish the mix design, using a Coarse Aggregate Factor acceptable to the Engineer. The mix shall be designed to conform with the requirements contained herein and in accordance with SDHPT Bulletin C-11. The Contractor shall perform, at his own expense, the work required to substantiate the design, except the testing of strength specimens which will be done by the Engineer. Complete concrete design data shall be submitted to the Engineer for approval.

It shall also be the responsibility of the Contractor to determine and measure the batch quantity of each ingredient, including all water, not only

for batch designs but for all concrete produced for the project, so that the mix conforms to these specifications and other requirements shown on the plans.

In lieu of the above mix design responsibility, the Contractor may accept a design furnished by the Engineer. This will not relieve the Contractor of providing concrete meeting the requirements of these specifications.

Trial batches shall be made and tested using all the proposed ingredients prior to the placing of concrete and also when the aggregate, and/or type, brand or source of cement, or admixture is changed. When the brand and/or source of cement only is changed, the Engineer may waive trial batches only if a prior record of satisfactory performance of the cement has been established.

Trial batches shall be made in the mixer to be used on the job. When ready-mix concrete is to be used, the trial designs will be made in a mixer representative of the mixers to be used. Batch size shall not be less than 50 percent of the rated mixing capacity of the truck.

Mix designs from previous or concurrent jobs may be used without trial batches if it is shown that no substantial change in any of the proposed ingredients has been made.

The Coarse Aggregate Factor shall not exceed 0.85.

After the mix proportions and water-cement ratio required to produce concrete of the specified strength have been determined, placing of the concrete may be started. The strength of the concrete in the completed pavement will be determined by flexural strength test specimens, made, cured and tested as provided in SDHPT Bulletin C-11. Modifications of the mix design will be required by the Engineer on the basis of the conformity of the strength of these test specimens with the requirements of this specification.

Changes in the water-cement ratio and the mix design, including an increase in cement factor if necessary, will be made when the average 7-day flexural strength of the concrete, as indicated by the last 10 flexural strength values (modulus of rupture) obtained from tests of beams made from concrete of the same water-cement ratio, departs from the desired minimum average strength by more than 4 percent.

The Engineer, at his option, may reject as non-representative any individual flexural strength value in each group of ten where strengths more than 10 percent above or below the average for the group are indicated and compute the average flexural strength on the basis of the remaining values. When the concrete fails to meet any of the requirements for workability, the Engineer will require correction of this condition. In case it is necessary to change aggregates, to use an additional aggregate or to use admixtures,

preliminary strength tests will be required. Should tests representing 3 days production consistently indicate a considerable departure from the minimum specified strength, even though within the above limits, appropriate changes in the water-cement ratio and mix proportions will be made.

(6) **Test Specimens.** Unless otherwise specified on the plans, test beams for flexural strength shall be taken in accordance with SDHPT Bulletin C-11. Additional beams may be made as required by concrete placing conditions, or for adequately determining the strength of concrete where the early opening of the pavement to traffic is dependent upon concrete strength tests.

360.5. Subgrade And Forms.

(1) **Preparation of Subgrade.** Where stabilized subbase is not provided the subgrade shall be excavated as required, all unstable or otherwise objectionable material removed, and all holes, ruts and depressions filled with approved material. Rolling and sprinkling shall be performed when and to the extent directed, and the roadbed shall be completed to or above the plane of the typical sections shown on plans and the lines and grades established by the Engineer. Material excavated in the preparation of the subgrade shall be utilized in the construction of adjacent shoulders and slopes, and any additional material required for the completion of the sections shall be secured from sources indicated on plans or designated by the Engineer. Drainage of the roadbed shall be maintained at all times. Sealed or treated subgrade cut in the preparation of the subgrade or setting of pavement forms shall be resealed or the subgrade restored to the original condition as directed by the Engineer.

The subgrade shall be maintained in a smooth, compacted condition in conformity with the required section and established grade until the pavement is placed and shall be kept thoroughly wetted down sufficiently in advance of placing any pavement to insure its being in a firm and moist condition for at least 2 inches below the prepared surface. Sufficient subgrade shall always be prepared in advance to insure satisfactory prosecution of the work. No equipment or hauling shall be permitted on the prepared subgrade, except by special permission of the Engineer, which will be granted only in exceptional cases and only where suitable protection in the form of two-ply timber mats or other approved materials is provided.

(2) **Placing and Removing Forms.** The subgrade under the forms shall be firm and cut true to grade so that each form section when placed will be firmly in contact for its whole length and base width, and exactly at the established grade. Any subgrade under the forms below established grade shall be corrected, using suitable material, placed, sprinkled and rolled as directed. Forms shall be staked with at least three pins for each 10-foot sec-

tion. A pin shall be placed at each side of every joint. Form sections shall be tightly joined and keyed to prevent relative displacement. Forms shall be cleaned and oiled each time they are used.

Forms shall be set for a sufficient distance in advance of the point where concrete is being placed to permit a finished and approved subgrade length of not less than 300 feet ahead of the mixer. Conformity of the grade and alignment of forms shall be checked immediately prior to placing concrete, and all necessary corrections made by the Contractor. Where any form has been disturbed or any subgrade becomes unstable, the form shall be reset and rechecked. In exceptional cases, the Engineer may require suitable stakes driven to the grade of the bottom of the forms to afford additional support. Sufficient stability of forms to support the equipment operated thereon and to withstand its vibration without springing or settlement shall be required. If forms settle and/or deflect over 1/8 inch under finishing operations, paving operations shall be stopped and the forms shall be reset to line and grade.

Forms shall be leveled using cement-stabilized material containing not less than 1-1/2 sacks of cement per ton of mix as placed. The aggregate gradation and water content shall be determined by the Engineer. The cement-stabilized material shall be sufficiently plastic to insure filling the voids underneath the paving forms. Paving equipment will not be permitted on the forms until the cement stabilized material has cured for at least 12 hours.

Forms shall remain in place for not less than 8 hours after the concrete has been placed. They shall be carefully removed in such a manner that little or no damage will be done to the edge of the pavement. Any damage resulting from this operation shall be immediately repaired. After the forms have been removed, the ends of all joints shall be cleaned, and any honeycombed areas pointed up with approved mortar. Immediately after pointing is complete, the form trench, if used, shall be filled with earth from the shoulders in such manner as to shed water from rainfall or curing away from the edge of the pavement. On completion of the required curing, the subgrade or shoulders adjacent to the pavement shall be placed in condition to maintain drainage.

(a) Where payment for concrete pavement is to be made by the square yard, the forms may be adjusted to provide the minimum thickness provided on the plans in lieu of trimming the subbase to exact grade where high spots occur. When pavement forms are reset at a higher grade, the revised grade shall be secured with gradual transitions to the established grade at each end and by maintaining a proper drainage grade in the pavement. Forms shall rest on cement or asphalt stabilized material as directed by the Engineer. Allowable grade revisions as provided herein shall in no way affect the governing finishing and surface requirements of the completed pavement. All grade revisions shall be established by the Engineer.

(b) Where payment for concrete pavement is to be made by the cubic yard the pavement foundation or subgrade shall be tested after the forms are set to insure that the required pavement thickness will be obtained. Where high areas occur in the pavement foundation the pavement forms shall be reset at a higher grade. The revised grade shall be secured with gradual transitions to the established grade at each end and by maintaining a proper drainage grade in the pavement. Allowable grade revisions as provided herein shall in no way affect the governing finishing and surface requirements of the completed pavement. All grade revisions shall be established by the Engineer.

360.6. Concrete Mixing and Placing.

(1) **Mixing Methods.** The concrete shall be mixed in a mixer conforming to the requirements of Subarticle 360.3(4). Ready-Mix concrete conforming to the Item, "Ready-Mix Plants", may be used for mixing concrete for pavement only when specifically permitted by a note on the plans except that ready-mix concrete may be used for curbs, irregular sections and/or small placements such as turnouts and leaveouts.

(2) **Mixing.** The aggregates, mineral filler if required, cement and water shall be measured separately, introduced into the mixer, and mixed for a period of not less than 50 seconds nor more than 90 seconds, measured from the time the last aggregate enters the drum to the time discharge of the concrete begins. The required water shall be introduced into the mixing drum during the first 15 seconds of mixing. The entire contents of the drum shall be discharged before any materials of the succeeding batch are introduced.

The Engineer may increase the minimum mixing time to that necessary to produce thoroughly mixed concrete based on inspection or appropriate uniformity tests. The mixing time may be varied at any time as necessary to produce acceptable concrete.

If a central mixer is used, the concrete shall be discharged into the specified hauling equipment and delivered to the road site. If truck agitators are used, the concrete shall be continuously agitated at not less than one nor more than six rpm as directed by the Engineer.

The maximum size of the concrete batch, absolute volume, shall not exceed 120 percent of the rated size of the mixer (40.8 cubic feet maximum batch for the 34-cubic foot paver). Spilling of material from the mixer drum shall be corrected by reducing the size of the batch. Retempering or remixing of concrete will not be permitted.

The initial batch of concrete mixed after each time the mixer is washed out shall be enriched by additional mortar. The additional mortar shall be one sack of cement and three parts of sand.

(3) **Placing.** Unless otherwise shown on the plans the concrete may be placed by using forms or by use of a slipform paver. Any concrete not placed as herein prescribed within 30 minutes after mixing shall be rejected and disposed of as directed except as provided otherwise herein. Except by specific written authorization of the Engineer, concrete shall not be placed when the temperature is below 40 F and falling but may be placed when the temperature is above 35 F and rising, the temperature being taken in the shade and away from artificial heat.

When such permission is granted, the Contractor shall furnish an approved enclosure, such as canvas-covered framework, to enclose and protect all pavement so placed, and shall maintain the temperature of the air surrounding the concrete at not less than 50 F for not less than 5 days. When concrete is being placed in cold weather, other than under the conditions stated above, the Contractor shall have available a sufficient supply of an approved covering material to immediately protect concrete if the air temperature falls to 32 F, or below, before concrete has been placed 4 hours. Such protection shall remain in place during the period the temperature continues below 32 F, or for a period of not more than 5 days. Neither salt nor other chemical admixtures shall be added to the concrete to prevent freezing. The Contractor shall be responsible for the quality and strength of concrete under cold weather conditions and any concrete damaged by freezing shall be removed and replaced at his expense. Concrete shall not be placed before sunrise and shall not be placed later than will permit the finishing of the pavement during sufficient natural light.

Concrete shall be placed only on approved subgrade or subbase and, unless otherwise indicated on plans, the full width of the pavement shall be constructed monolithically. The concrete shall be deposited on the subgrade or subbase in such manner as to require as little rehandling as possible. Where hand spreading is necessary, concrete shall be distributed to the required depth by use of shovels. The use of rakes will not be permitted. Workers will not be permitted to walk in the concrete with any earth or foreign material on their boots or shoes. The placing of concrete shall be rapid and continuous.

When the concrete is to be placed in separate lanes, the junction line shall not deviate from the true line more than 1/2 inch at any point and shall be finished as shown on plans.

The mixer shall not be located on completed pavement, except as herein provided, but may be located on the subgrade of that lane of the pavement being constructed, as provided under Subarticle 360.5.(1). When limited space, in the opinion of the Engineer, requires operation of the mixer on completed pavement, the mixer may be so operated provided the concrete

has attained the minimum average flexural strength required under Article 360.4, and provided suitable protection to the pavement in the form of two ply timber mats or other approved material is provided.

Concrete shall be distributed to such depth that, when consolidated and finished, the slab thickness required by plans will be obtained at all points and the surface shall not, at any point, be below the established grade. Special care shall be exercised in placing and spading concrete against forms and at all joints to prevent the forming of honeycombs and voids.

Unless otherwise shown on plans, when the placing of concrete is accomplished in two passes (double strike-off method) to allow placing the reinforcement in the form of bar mats after the first pass, the first pass shall be uniformly spread and/or struck off so that the final position of the longitudinal steel will be within 1/2 inch of the position dimensioned on the plans. The second pass shall be placed as soon as the reinforcing is in place prior to initial set and in no case shall it be placed later than 20 minutes after completion of the first pass.

Concrete for the monolithic curbs shall be the same as for the pavement and, if carried back from the paving mixer shall be placed within 20 minutes after being mixed. It may be placed from the separate mixer if desired but in any case must be placed while the pavement concrete is still plastic. When sawed joints are used, curbs shall be doweled as shown on plans and poured after sawing. Curbs doweled on and placed separately may be placed with an extrusion machine and the mixture shall conform to Article 360.4.

If a central mixer is used, the Contractor shall provide a system satisfactory to the Engineer for determining that concrete delivered to the road meets the specified requirements for mixing and time of placing.

Unless otherwise shown on plans, two mixers will be required where the double strike-off method is employed.

If, in the opinion of the Engineer, the temperature, wind and/or humidity conditions are such that the quality of the concrete will not be adversely affected, the specified placing time may be extended to a maximum of 45 minutes.

(4) **Reinforcing Steel and Joint Assemblies.** All reinforcing steel, including steel wire fabric reinforcement, tie bars, dowel bars, and load transmission devices used in accordance with plan provisions shall be accurately placed and secured in position in accordance with details shown on plans. Reinforcing bars shall be securely wired together at alternate intersections, following a pattern approved by the Engineer, and at all splices, and shall be securely wired to each dowel intersected. When wire fabric is used, it replaces only the longitudinal and transverse bars and shall be securely wired together at all splices and to each dowel intersected. Tie bars shall be in-

stalled in the required position by the method and device shown on plans or by approved method and device equivalent thereto. Mechanical placement of steel will be permitted. If this method of placement proves inadequate, the work shall be completed using conventional methods.

Bar coatings required by plans, and of material specified, shall be completed and the bars and coating shall be free of dirt or other foreign matter at the time of installation in the concrete.

Tightly adhered scale or rust which resists removal by vigorous wire brushing need not be removed except that excessive loss of section to the reinforcement due to rust shall be cause for rejection. Excessive loss of section shall be defined as loss of section to the extent that the reinforcement will no longer meet the physical requirements for the size and grade of steel specified.

Where plans require an assembly of parts at pavement joints, the assembly shall be completed, placed at required location and elevation, and all parts rigidly secured in required position by the method and devices shown on plans or by approved method and devices equivalent thereto. Dowel bars shall be accurately installed in joint assemblies in accordance with plans, each parallel to the pavement surface and to the centerline of the pavement, and shall be rigidly secured in required position by such means (as shown on plans, or approved equivalent thereto) that will prevent their displacement during placing and finishing of the concrete. Header boards, joint filler and other material used for forming joints shall be accurately notched to receive each load transmission device. All load transmission devices shall be free of rust and clean when installed in the concrete.

(5) **Construction Joints.** Intentional stoppage of the placing of the concrete shall be at either an expansion joint or at a weakened plane joint, if load transmission devices are specified. If the design for load transmission is to be by aggregate interlock only, intentional stoppage shall be in the middle of a slab. The following provisions shall govern for each type of joint at which the placing of concrete is stopped.

(a) When the placing of concrete is stopped at an expansion joint, the complete joint assembly shall be installed and rigidly secured in required position as shown on plans. A bulkhead of sufficient cross sectional area to prevent deflection, accurately notched to receive the load transmission devices and shaped accurately to the cross section of the pavement shall be provided and installed as a back-up for the joint filler and rigidly secured in required position to permit accurate finishing of the concrete up to the joint. After the concrete has been finished to the joint, formation of the joint seal space and finishing of the joint shall be executed as specified herein and in accordance with plan requirements. The back-up bulkhead shall remain in place until immediately prior to the time when concrete placing is resumed, when it shall be carefully removed in such manner that no element

of the joint assembly will be disturbed. The exposed portion of the joint assembly shall be free of adherent concrete, dirt or other material at the time placing of concrete is resumed.

(b) When placing of concrete is stopped at a weakened plane joint, all applicable provisions of paragraph (a) above shall apply in addition to the following requirements:

The face of the bulkhead adjoining the slab end shall be notched and grooved to fit the exposed half section of the joint assembly and shall be shaped to form the slab end at the center of the joint as shown on the plans. The half-width of joint seal-space may be formed by a strip of required section placed and removed in accordance with plan requirements for construction of transverse contraction joints. The Contractor shall have available a bulkhead shaped to the section of the pavement. This bulkhead must be drilled to permit the continuation of all longitudinal reinforcing steel through the construction joint and shall be of sufficient section and strength to prevent deflection.

(c) When load transmission devices are not provided in the design, intentional stopping of placement of concrete shall occur in the middle of a slab. Provisions shall be made to provide a bulkhead which will accommodate tie bars of the same length, size and spacing as tie bars used for the longitudinal joints. When the concrete placement is resumed, the bulkhead shall be removed without bending the tie bars or damaging the concrete. The joint seal space and sealer shall be the same as for longitudinal joints.

Immediately upon the unintended stoppage of the placing of concrete, the Contractor shall place the available concrete to a line and install the above described bulkhead at right angles to the centerline of the pavement, perpendicular to the surface and at the required elevation. Concrete shall be placed and finished to this bulkhead. Any concrete remaining on the subgrade ahead shall be removed and disposed of as directed by the Engineer. When placing of concrete is resumed before the concrete has set to the extent that the concrete will stand on removal of the bulkhead, the new concrete shall be rodded with the first. An edge created by construction joint of this type shall have a joint seal space and shall be sealed as required for contraction joints.

360.7. Joints.

(1) **General.** All transverse and longitudinal joints when required in the pavement shall be of the type or alternate type shown on plans and shall be constructed at required location, on required alignment, in required relationship to tie bars and joint assemblies, and in accordance with details shown on plans. Such stakes, braces, brackets or other devices shall be used as necessary to keep the entire joint assembly in true vertical and horizon-

tal position. Where concrete base is overlaid by asphaltic concrete the joints shall be prepared as specified herein, but joint sealing will not be required unless specified on plans.

If necessary for proper installation of the sealer, excessive spalling of the joint groove shall be repaired to the satisfaction of the Engineer in the manner which he prescribes.

Careful workmanship shall be exercised in the construction of all joints to insure that the concrete sections are completely separated by an open joint or by the joint materials and to insure that the joints will be true to the outline indicated.

(2) **Expansion Joints.** Transverse expansion joints shall be formed perpendicular to the centerline and surface of the pavement and shall be constructed in accordance with the sequence of operations shown on plans. After the transverse finishing machine and before the longitudinal finishing machine have passed over the joint, the Contractor shall test the joint filler for correctness of position and make any required adjustment in position of the filler and shall install the joint seal space form in accordance with plans. After removal of the joint seal form as required by plans, the joint seal space above the joint filler shall be thoroughly sandblasted or machine routed to remove all projecting concrete, laitance, dirt or foreign matter. The concrete faces of the joint seal space shall be left true to line and section throughout the entire length of the joint. On completion of curing of the pavement, the joint sealing filler of the type specified shall be placed in accordance with plans. The faces of the joint seal space shall be clean and surface dry at the time joint sealing filler is placed. On completion of the joint seal, the pavement adjacent to the joint shall be left free of joint sealing material. The joint seal space shall be exactly above and not narrower than the joint filler with no concrete overhangings.

(3) **Weakened Plane Joints.** Weakened plane joints shall consist of transverse contraction joints and longitudinal joints and shall be formed or sawed as specified on the plans. When the joints are sawed, the saw shall be power driven, shall be manufactured especially for the purpose of sawing concrete, and shall be capable of performing the work. Saw blades shall be designed to make a clean smooth cut having a width and depth of cut as detailed on the plans. Tracks adequately anchored, chalk, string line or other approved methods shall be used to provide true alignment condition and the Contractor shall keep a standby power saw on the project at all times when concrete operations are under way.

If membrane curing is used, the portion of the seal which has been disturbed by sawing operations shall be restored by the Contractor by spraying the areas with additional curing seal.

Forming, finishing and sealing of the joint seal space shall be in accordance with applicable provisions of Subarticle 360.7.(2) and details shown on plans.

(a) Contraction Joints. Transverse contraction joints shall be formed or sawed joints perpendicular to the centerline and surface of the pavement and shall be constructed by the method, and in the sequence of operations, as shown on plans. Where sawed joints are used, contraction joints at approximately 60-foot intervals shall be sawed as soon as sawing can be accomplished without damage to the pavement and before 24 hours after the concrete has been placed, the exact time to be approved by the Engineer. The remaining contraction joints shall be sawed in a uniform pattern as directed by the Engineer, and they shall be completed before uncontrolled cracking of the pavement takes place. All joints shall be completed before placing concrete in succeeding lanes and before permitting traffic to use the pavement.

If the metal contraction joint form is used it shall be secured in position by a transverse metal brace or other approved device as required by Subarticle 360.2.(10) that will securely hold the form in place. The concrete adjacent to the metal contraction joint form shall be vibrated to the extent necessary to insure complete consolidation without honeycombing.

(b) Longitudinal Joints. Longitudinal joints shall be of the type or alternate types shown on plans and shall be constructed of specified materials in accordance with provisions of the plans. Longitudinal joints shall be constructed accurately to required lines, shall be perpendicular to the pavement surface at the joint, and the pavement surface over and adjacent to the joint shall be finished as specified.

Longitudinal joints shall be sawed as soon as sawing can be accomplished without damage to the pavement. Sawing shall not cause damage to the pavement and the groove shall be cut with a minimum of spalling. No traffic (including construction traffic) shall be permitted on the pavement until the longitudinal joint is cut.

When the flex plane type longitudinal joint is used, it shall be placed behind the longitudinal float.

(4) Joint Sealers. Unless otherwise specified on the plans, either Class 1-a, Class 1-b, Class 2, Class 3, Class 4 or Class 5 materials, designated by Subarticle 360.2.(8), may be used at the option of the Contractor.

Class 1-a and 1-b Materials. These materials shall be mixed and applied according to the manufacturer's recommendations.

Class 2 Material. This material shall be melted in an approved oil-bath

kettle equipped with temperature indicators and continuously operated mechanical agitators. The material shall not be heated above 450 F and any material heated above that temperature will be rejected.

For placement in vertical joints (curb faces, etc.) either of the following procedures may be used.

(a) An amount of the mixed material may be set aside until partial curing has taken place and carefully trowelled into the joint with a suitable tool.

(b) The portion of the joint in the roadway shall be poured and cured. The vertical curb faces shall then be taped or formed and the material poured into the vertical joint from the top.

Class 3 Material. After the joints in the hardened concrete have been thoroughly cleaned to the satisfaction of the Engineer, the material shall be installed into each joint by means of a powered, concrete joint sealing machine capable of continuously feeding the compound under pressure into the joint in such a way as to fill it solidly. The extruding nozzle tip of the sealing machine shall be of such design as to fill the joint opening uniformly from the bottom to the top in a neat and workmanlike manner. The joints shall be completely filled.

Class 4 Material. After the joints in the hardened concrete have been repaired (if necessary) and cleaned to the satisfaction of the Engineer, the material shall be installed into each joint by means of an appropriate hand or power operated installation device using the lubricant-adhesive specified. The seal shall be installed in a compressed condition and shall be free of an objectionable amount of curling and twisting during installation in the joint groove. It shall be of such material and so installed that it will effectively seal joints in concrete against water, dirt, and stones throughout repeated cycles of expansion and contraction. Stretching of the compression seal during installation in the joint will not be permitted.

Class 5 Material. This material shall be applied in accordance with the manufacturer's recommendations.

(5) **Joint Filler Boards.** Boards shall be anchored as indicated by the plans.

(6) **Curbs.** The curb shall be constructed in lengths equal to the adjoining pavement slab lengths, and expansion joints shall be provided in the curb opposite each transverse expansion joint in the pavement. Expansion joint material shall be of the same thickness, type and quality as specified for the pavement and shall be of the section as shown for the curb. All expansion joints shall be carried through the curb.

When sawed joints are provided for the pavement, the curb placement shall be delayed until all transverse joints have been sawed. To provide

bond for the curb, dowel bars shall be placed as indicated on the plans while the pavement concrete is still plastic.

Weakened plane joints shall be formed in monolithic curbs at a spacing to coincide with the joints in the concrete pavement. The joints shall be formed by inserting in the curb an asphaltic board strip cut to conform to the shape of the curb. When the concrete is sufficiently set, the joint on the top and face of curb shall be grooved with an approved type of grooving tool.

A finish coat of mortar shall be applied on the exposed surfaces of the monolithic curbs. The mortar shall be composed of one part of Portland cement and two parts of fine aggregate. A mortar coat will not be required for extruded curbs.

The curb face, lower radius and top of curb shall be plastered with the sand-cement mortar. The mortar shall be applied with a template or "mule" made to conform to the curb dimensions shown on plans. All exposed surfaces of the curb shall be finished with a steel trowel and brushed to a smooth and uniform surface. The mortar finish as required shall be subsidiary to the Item, "Concrete Pavement".

360.8. Spreading and Finishing.

(1) Machine-Finishing. All concrete pavement shall be finished mechanically with approved power-driven machines, except as herein provided. Hand-finishing will be permitted on the transition from a crowned section to a superelevated section without crown on curves, and on straight line superelevation sections less than 300 feet in length. Hand-finishing will also be permitted on that portion of a widened pavement outside the normal pavement width, on sections where the pavement width is not uniform, or required monolithic widths are greater than that of available finishing machines.

Machine-finishing of pavement shall include the use of power-driven spreaders, power-driven vibrators, power-driven transverse strike-off, and screed, or such alternate equipment as may be substituted and approved under Subarticle 360.3(11).

All concrete pavement shall be consolidated by a mechanical vibrator. As soon as the concrete has been spread between the forms, the approved mechanical vibrator shall be operated to consolidate the concrete and remove all voids. Hand-manipulated vibrators shall be used for areas not covered by the mechanical vibratory unit.

The transverse finishing machine shall first be operated to compact and finish the pavement to the required section and grade, without surface voids. The machine shall be operated over each area as many times and at such intervals as directed. At least two trips will be required and the last

trip over a given area shall be a continuous run of not less than 40 feet. After completion of finishing with the transverse finishing machine a transverse drag float may be used.

The consistency of the concrete as placed should allow the completion of all finishing operations without the addition of water to the surface. When field conditions are such that additional moisture is needed for the final concrete surface finishing operation, the required water shall be applied to the surface by fog spray only and shall be held to a minimum.

After finishing is complete and the concrete still workable, the surface shall be tested for trueness with an approved 10-foot steel straightedge. The straightedge shall be operated from the side of the pavement, placed parallel to the pavement centerline and passed across the slab to reveal any high spots or depressions. The straightedge shall be advanced along the pavement in successive stages of not more than one-half its length. Practically perfect contact of the straightedge with the surface will be required, and the pavement shall be leveled to this condition, in order to insure conformity with the surface test required below, after the pavement has fully hardened. Any correction of the surface required shall be accomplished by adding concrete if required and by operating the longitudinal float over the area. The surface test with the straightedge shall then be repeated.

For one-lane pavement placement and uniform widening, the equipment for machine-finishing of concrete pavement shall be as directed by the Engineer but shall not exceed the requirements of these specifications.

After completion of the straightedge operation, as soon as construction operations permit, texture shall be applied with 1/8-inch wide metal tines with clear spacing between the tines being not less than 1/4 inch nor more than 1/2 inch. If approved by the Engineer, other equipment and methods may be used, provided that a surface texture meeting the specified requirements is obtained. The texture shall be applied transversely. It is the intent that the average texture depth resulting from the number of tests directed by the Engineer be not less than 0.060 inch with a minimum texture depth of 0.050 inch for any one test when tested in accordance with Test Method Tex-436-A. Should the texture depth fall below that intended, the finishing procedures shall be revised to produce the desired texture.

Emergency Procedures

The Contractor shall have available at all times hand rakes with tines for the purpose of providing texture in the event of equipment breakdown.

The Contractor also shall have available a conventional garden spray-type can containing a commercially available monomolecular film compound. This shall be applied in the case of equipment breakdown or other emergencies to prevent the pavement from drying too rapidly. The use of

this product will give the Contractor additional time to provide adequate texturing.

After completion of texturing and about the time the concrete becomes hard, the edge of the slab and joints shall be carefully finished as directed by the Engineer, and the pavement shall be left smooth and true to line.

(2) **Hand-Finishing.** Hand-finishing shall be resorted to only in those conditions provided for above and upon specific authorization by the Engineer. When hand-finishing is permitted, the concrete shall be struck off with an approved strike-off screed to such elevation that when consolidated and finished the surface of the pavement shall conform to the required section and grade. The strike template shall be moved forward with a combined transverse and longitudinal motion in the direction the work is progressing, maintaining the template in contact with the forms, and maintaining a slight excess of material in front of the cutting edge. The concrete shall then be tamped with an approved tamping template to compact the concrete thoroughly and eliminate surface voids and the surface screeded to required section.

After completion of a strike-off, consolidation and transverse screeding, a hand-operated longitudinal float shall be operated to test and level the surface to the required grade.

Workers shall operate the float from approved bridges riding on the forms and spanning the pavement. The longitudinal float shall be held in contact with the surface and parallel to the center line and operated with short longitudinal strokes while being passed from one side of the pavement to the other. If contact with the pavement is not made at all points, additional concrete shall be placed, if required, and screeded, and the float shall be used to produce a satisfactory surface. Care shall be exercised to keep the ends of the float from digging into the surface of the pavement. After a section has been smoothed so that the float maintains contact with the surface at all points in being passed from one side to the other, the bridges may be moved forward half the length of the float and the operations repeated.

Other operations and surface tests shall be as required for machine finishing.

(3) **Surface Test.** After the concrete has been placed 12 hours or more, the Engineer will test the surface of the pavement with a 10-foot straightedge placed parallel to the centerline. Unless specified otherwise, the surface shall not vary from the straightedge by more than 1/16 inch per foot from the nearest point of contact, and in no case shall the maximum ordinate from a 10-foot straightedge to the pavement be greater than 1/8 inch. Any high spots causing a departure from the straightedge in excess of that specified shall be ground down by the Contractor to meet the surface test

requirements. Where the texture of the pavement is removed by extensive grinding, the texture shall be restored by grooving the concrete to meet the surface finishing specifications.

360.9. Curing.

(1) **General.** All concrete pavement shall be cured by protecting it against loss of moisture for a period of not less than 72 hours from the beginning of curing operations. Immediately after finishing operations have been completed, the entire surface of the newly laid concrete shall be covered and cured in accordance with the requirements specified for whichever of the following methods the Contractor may elect. Newly-laid concrete base to be overlaid by asphaltic concrete shall not be cured by "Membrane Curing", and surfaces not to be overlaid by asphaltic concrete shall not be cured by "Asphalt Curing". In all cases in which curing requires the use of water, the curing shall have prior right to all water supply or supplies. Failure to provide sufficient cover material of the type the Contractor elects to use, failure to maintain saturation in wet curing methods, lack of water to adequately take care of both curing and other requirements, or other failures to comply with curing requirements shall be cause for immediate suspension of concreting operations. The covering material used in curing shall be removed as necessary to saw joints or to comply with the requirements for "Surface Test". The concrete surface shall be maintained wet with a water spray if required, and the covering material replaced immediately on completion of sawing and testing and any required surface correction.

(2) **Cotton Mat Curing.** Immediately after the finishing of the surface has been completed and the concrete has taken its initial set, the surface shall be completely covered with cotton mats, thoroughly saturated before application, in such manner that they will contact the surface of the pavement equally at all points. Immediately upon removal of side forms, drainage shall be established as specified, and the pavement edges completely covered with either saturated cotton mats or saturated earth.

The cotton mats shall remain on the pavement for not less than the specified curing period and shall be kept saturated so that, when lightly compressed, water will drip freely from them. Earth banked against pavement edges, or cotton mat covering of edges, shall be kept saturated.

(3) **Waterproofed Paper Curing.** Immediately after the finishing of the surface has been completed and the concrete has taken its initial set, it shall be wetted with water applied in the form of a fine spray and covered with waterproofed paper so placed and weighted as to cause it to remain in intimate contact with the surface. The paper covering shall be maintained in place continuously for not less than the specified curing period.

The waterproofed paper shall be prepared to form blankets of sufficient width to cover the entire surface and both edges of the pavement slab, and such blankets shall not be more than 60 feet in length. All joints in the blankets occasioned by joining paper sheets shall lap not less than 5 inches and shall be securely sealed with asphalt cement having a melting point of approximately 180 F. Blankets shall be placed to secure an overlap of at least 12 inches, and this lap securely weighted to form a closed joint.

The waterproofed paper blankets shall be adequately weighted to prevent displacement or billowing due to wind and the paper folded down over the side of the pavement shall be secured by a continuous bank of earth. Plowing of this windrow into place will not be permitted.

All tears or holes appearing in the paper during the curing period shall be immediately repaired by cementing patches over such defects. It shall be the Contractor's responsibility to prevent damage to the paper blankets which would affect their serviceability and effectiveness as a concrete curing method. Blankets may be rejected by the Engineer at any time when, in his opinion, they do not provide an airtight covering.

Paper blankets rejected on account of pinholes or minor tears may be continued in service by folding the blanket over lengthwise, first thoroughly spraying one-half the blanket with the asphalt cement used for seams. The two thicknesses shall be firmly pressed together and well cemented. All blankets shall be of a width sufficient to cover the pavement surface and both edges. Doubled blankets may be rejected for the same cause as provided for single blankets. All paper blankets condemned by the Engineer shall be immediately marked by the Contractor for identification and then destroyed or stored entirely separate from approved blankets.

No walking on the paper shall be permitted at any time, and, in locations where pedestrian traffic cannot be entirely controlled, the Contractor shall provide walkways and barricades or shall substitute other permissible curing methods on such sections of pavement.

(4) **Polyethylene Film Curing.** Immediately after the finishing of the surface has been completed and the concrete has taken its initial set, it shall be wetted with water applied in the form of a fine spray and covered with the polyethylene film so placed and weighted as to cause it to remain in intimate contact with the surface. The polyethylene film covering shall be maintained in place continuously for not less than the specified curing period.

The film shall be prepared to form blankets of sufficient width to cover the entire surface and both edges of the pavement slab. All joints in the blankets occasioned by joining film sheets shall lap not less than 12 inches. All joints shall be sealed in a manner acceptable to the Engineer to provide a moisture-proof lap.

The polyethylene film blankets shall be adequately weighted to prevent displacement or billowing due to wind and the film folded down over the side of the pavement shall be secured by a continuous bank of earth. Plowing of this windrow into place will not be permitted.

All tears or holes appearing in the polyethylene film during the curing period shall be immediately repaired by placing acceptable moisture proof patches over such defects or by replacing the blankets. It shall be the Contractor's responsibility to prevent damage to the film blankets which would affect their serviceability and effectiveness as a concrete curing method. Blankets may be rejected by the Engineer at any time when, in his opinion, they do not provide an airtight covering.

Polyethylene film blankets rejected on account of pinholes or minor tears may be continued in service when repaired to an airtight condition. All polyethylene film blankets condemned by the Engineer shall be immediately marked by the Contractor for identification and then destroyed or stored entirely separate from approved blankets.

Should the film blanket be damaged or torn for any cause during the first 72 hours of the curing period such damage shall be repaired immediately.

(5) **Membrane Curing.** Immediately after the finishing of the pavement has been completed and after the free surface moisture has disappeared, the pavement shall be sprayed uniformly with a curing compound. Should the film of compound be damaged from any cause before the expiration of 72 hours after original application, the damaged portions shall be repaired immediately with additional compound. Unless otherwise specified on the plans, membrane curing shall be used when the concrete (except that concrete to be used as a base) is placed with a slipform paver.

(6) **Asphalt Curing.** The equipment and method of application shall be the same as described in Subarticle 360.9.(5), except that the rate of application may vary between the limits of 1 gallon per 180 square feet and 1 gallon per 90 square feet. The rate of application will be determined by the Engineer after observation of sections where amounts varying between the above limits have been applied. If it is found necessary to add water to the emulsion for the proper distribution through the spray, this may be done upon approval of the Engineer. When the emulsion is diluted with water the amount of the applied mixture shall be increased to give a coverage of the original emulsion between the limits as set out herein. Care must be taken to properly mix the emulsion and water and to keep the mixture well agitated during application.

360.10. Protection of Pavement and Opening to Traffic.

(1) **Protection of Pavement.** The Contractor shall erect and maintain the barricades required by plans and such other standard and approved devices as will exclude public traffic and traffic of his employees and agents from the newly placed pavement for the periods of time hereinafter prescribed. Portions of the roadway, or crossings of the roadbed required to be maintained open for use by traffic, shall not be obstructed by the above required barricades. Crossings of the pavement required by plans, or by construction sequence, during the period prior to opening to traffic as herein specified, shall be provided with an adequate and substantial bridge, approved by the Engineer.

(2) **Opening Pavement to Traffic.** The pavement shall be closed to all traffic, including vehicles of the Contractor, until the concrete is at least 7 days old and has attained a minimum average modulus of rupture as required under Article 360.4. of these specifications. This period of closure to all traffic may be extended if, in the opinion of the Engineer, weather or other conditions make it advisable to provide an extension of the time of protection.

At the end of the 7-day period and as long thereafter as ordered by the Engineer and, if so desired by the Contractor, the pavement may be opened for use by vehicles of the Contractor provided the gross weight (vehicle plus load) of such vehicles does not exceed 14,000 pounds. Such opening, however, shall in no manner relieve the Contractor from his responsibility for the work in accordance with Item 7. On those sections of the pavement thus opened to traffic, all joints shall first be sealed, the pavement cleaned and earth placed against the pavement edges before permitting vehicles thereon.

After the concrete in any section of pavment is 14 days old, or as long thereafter as ordered by the Engineer, such section of pavement may be opened to all traffic as required by plans or when so directed by the Engineer. On those sections of the pavement thus opened to traffic, all joints shall first be sealed, the pavement cleaned, earth placed against the pavement edges and all other work performed as required for the safety of traffic. Such opening, however, shall in no manner relieve the Contractor from his responsibility for the work in accordance with Item 7.

When high early strength concrete, resulting from the use of Type III cement as required by plans or special provisions, is used, the pavement may be opened to all traffic after the concrete is 7 days old, or as long thereafter as ordered by the Engineer, subject to the same provisions governing the opening after 14 days as above prescribed.

Where the Contractor desires to move any equipment not licensed for operation on public highways, on or across any pavement opened to traffic,

he shall protect the pavement from all damage by means of two-ply timber mats of 2 inch stock or runways of heavier material laid on a layer of earth, all as approved by the Engineer.

(3) **Emergency Opening to Traffic.** The Engineer may require the opening of pavement to traffic prior to the minimum time specified above under conditions of emergency which in his opinion require such action in the interest of the public. In no case shall the Engineer order opening of the pavement to traffic within less than 72 hours after the last concrete in the section is placed. The Contractor shall remove all obstructing materials, place earth against the pavement edges and perform other work involved in providing for the safety of traffic as required by the Engineer in ordering emergency opening. Orders for emergency opening of the pavement to traffic will be issued by the Engineer in writing.

360.11. Deficient Pavement Thickness. Adjustment in unit prices provided for in this article will apply only when measurement for payment is by the square yard.

The pavement shall be constructed in strict conformity with the thickness and typical sections shown on plans. The following rules shall govern for determining pavement thickness, and for adjustment of unit prices.

(1) The pavement will be cored by the Department prior to final acceptance. Locations of core tests may be selected by the Engineer; however, the spacing interval for core tests, as specified herein, is to be maintained. The thickness of the pavement will be determined by measurement of the cores in accordance with Test Method Tex-424-A.

For the purpose of establishing an adjusted unit price for pavement, units to be considered separately are defined as 1000 linear feet of pavement in each traffic lane starting at the end of the pavement bearing the smaller station number. The last unit in each lane shall be 1000 feet plus the fractional part of 1000 feet remaining. Traffic lane width will be as shown on typical sections and pavement design standards.

For the purpose of establishing an adjusted unit price for ramps, widening, acceleration and deceleration lanes that are machine-placed, isolated pavements of traffic lane width but less than 1000 feet in length, and other areas designated by the Engineer, units to be considered separately are defined as 1000 square yards of pavement or fraction thereof.

One core will be taken by the Department at the location selected by the Engineer or at random in each unit. When the measurement of the core from any unit is not deficient more than 0.2 inch from the plan thickness, full payment will be made. When the measurement of the core from any unit is deficient more than 0.2 inch but not more than 0.75 inch from the plan thickness two additional cores will be taken from the unit and the average of the three cores determined. The two additional cores from any 1000-foot

unit will be taken at intervals of not less than 300 feet. The two additional cores from any 1000-square yard unit will be taken at locations such that the pavement in the unit will be well represented. If the average measurement of these three cores is not deficient more than 0.2 inch from the plan thickness, full payment will be made. If the average thickness of the three cores is deficient more than 0.2 inch but not more than 0.75 inch from the plan thickness, an adjusted unit price as provided in Subarticle 360.11.(2) will be paid for the areas represented by these cores.

In calculating the average thickness of the pavement, measurements which are in excess of the specified thickness by more than 0.2 inch will be considered as the specified thickness plus 0.2 inch, and measurements which are less than the specified thickness by more than 0.75 inch will be considered as the specified thickness less 0.75 inch.

When the measurement of any core is less than the specified thickness by more than 0.75 inch, the actual thickness of the pavement in this area will be determined by taking additional cores at 10-foot intervals parallel to the centerline in each direction from the deficient core until, in each direction, a core is taken which is not deficient by more than 0.75 inch. Exploratory cores for deficient thickness will not be used in averages for adjusted unit price. Exploratory cores are to be used only to determine the length of pavement in a unit that is to be left in place without pay and/or removed and replaced as provided in Subarticle 360.11.(2).

(2) **Price Adjustments.** Where the average thickness of pavement is deficient in thickness by more than 0.2 inch, but not more than 0.75 inch, payment will be made at an adjusted price as specified in the following table.

Concrete Pavement Deficiency

Deficiency in Thickness Determined by Cores Inches	Proportional Part of Contract Price Allowed
0.00 to 0.20	100 percent
0.21 to 0.30	80 percent
0.31 to 0.40	72 percent
0.41 to 0.50	68 percent
0.51 to 0.75	57 percent

Any area of pavement found deficient in thickness by more than 0.75 of an inch but not more than one inch or 1/8 of the plan thickness, whichever is greater, shall be evaluated by the Engineer. If, in the judgment of the Engineer, the area of such deficiency should not be removed and replaced, there will be no payment for the area retained. If, in the judgment of the Engineer, the area of such deficiency warrants removal, the area shall be removed and replaced, at the Contractor's entire expense, with concrete of the thickness shown on the plans.

Any area of pavement found deficient in thickness by more than one inch or more than 1/8 of the plan thickness, whichever is greater, shall be removed and replaced, at the Contractor's entire expense, with concrete of the thickness shown on the plans.

(3) No additional payment over the contract unit price will be made for any pavement of a thickness exceeding that required by plans.

360.12. Measurement.

(1) When provided by the plans, concrete pavement will be measured by the square yard of surface area of completed and accepted work. The surface area will include that portion of the pavement slab extending beneath the curb. When concrete pavement is to be measured by the square yard and monolithic curb is required, measurements for "Monolithic Curb" will be by the linear foot complete in place.

(2) When provided by the plans, concrete pavement, including monolithic curb when required, will be measured by the cubic yard of absolute volume of all materials entering the mixture as prescribed in SDHPT Bulletin C-11.

360.13. Payment. The work performed and materials furnished as prescribed by this item and measured as provided under "Measurement" will be paid for at the unit price bid for "Concrete Pavement" of the type and depth specified, "Concrete Pavement" of the type, reinforcement and depth specified, "Concrete Pavement (High Strength)" of the type and depth specified, "Concrete Pavement (High Strength)" of the type, reinforcement and depth specified and "Monolithic Curb" of the type specified (when pavement is measured by the square yard), as required, or the adjusted unit price for pavement of deficient thickness as provided under "Deficient Pavement Thickness", which price shall be full compensation for shaping and fine-grading the roadbed, including furnishing and applying all water required; for furnishing, loading and unloading, storing, hauling and handling all concrete ingredients, including all freight and royalty involved; for placing and adjusting forms, including supporting material or preparing track grade; for mixing, placing, finishing, sawing, cleaning and sealing joints and curing all concrete; for furnishing and installing all reinforcing steel; for furnishing all materials for sealing joints and placing longitudinal, expansion and weakened-plane joints, including all steel-dowel caps and load-transmission devices required and wire and devices for placing, holding and supporting the steel bars, loading steel bars where required by plans and for all manipulations, labor, equipment, appliances, tools, and incidentals necessary to complete the work.

Excavation required by this item in the preparation of the subgrade and for the completion of the shoulders and slopes will be measured and paid for in accordance with the provisions governing the Items of "Roadway Ex-

cavation" and "Borrow", respectively, with the provision that yardage will be measured and paid for once only, regardless of the manipulations involved; or where shown on plans, such work will be measured and paid for in accordance with the provisions governing the Item, "Blading". Measurement of subgrade excavation for payment will be limited to a total width of that of the pavement plus 1 foot on each side. Payment under excavation items will not be allowed within the areas designated for "Blading".

Sprinkling and rolling required for the compaction of the rough subgrade in advance of fine grading will be measured and paid for as indicated in the governing items of excavation. Maintenance of a moist condition of the subgrade in advance of fine grading and concrete placing will not be paid for directly but shall be considered subsidiary work, as provided above.

ITEM 364

CONCRETE PAVEMENT
(Class "A" Concrete)

364.1. Description. This item shall consist of a pavement and/or base of Portland cement concrete, with or without reinforcement as shown on plans, with or without monolithic curbs, constructed as herein specified on the prepared subgrade or other base course in conformity with the thickness and typical cross sections shown on plans and to the lines and grades established by the Engineer.

364.2. Materials. Concrete shall conform to the requirements for Class "A" Concrete in the Item, "Concrete for Structures", except that when the temperature of the air or concrete is above 85 F, use of admixtures is permissible and Tables 2, 3 and 4 are modified as follows:

Class	Min. Sacks Cement Per Cubic Yard	Min. Comp. Strength 28 Day P.S.I.	Max. Water Cement Ratio	Slump Range Inches	Coarse Aggregate Number	Fine Aggregate Number
A	5.0	3000	7.0	1-3	1,2,3 or 4	1

All other materials shall conform to the requirements of Articles 360.2.(6) to 360.2.(16) inclusive of the Item, "Concrete Pavement (Water Cement Ratio)".

364.3. Proportioning and Mixing. Proportioning and mixing of concrete shall be in accordance with the provisions of the Item, "Concrete for Structures", and concrete shall meet the strength and quality requirements required by that item.

364.4. Construction Methods. Preparation of subgrade, and placing, finishing and curing of concrete shall conform to the requirements of the Item, "Concrete Pavement (Water Cement Ratio)", except that equipment and construction methods, satisfactory to the Engineer, which will produce the desired results may be used in lieu of those specified.

Hand finishing will be permitted.

364.5. Penalty for Deficient Pavement Thickness. The provisions of Article 360.11. of the Item, "Concrete Pavement (Water Cement Ratio)", is made a part of these specifications and shall govern for this item.

364.6. Measurement.

(1) When provided by plans and proposal, concrete pavement will be measured by the square yard of surface area of completed and accepted work. The surface area will be construed to also include that portion of the pavement slab extending beneath the curb. When "Monolithic Curb" is required, measurement will be by the linear foot complete in place.

(2) When provided by plans and proposals, concrete pavement, including monolithic curb required, will be measured by the cubic yard complete in place.

364.7. Payment. The work performed and materials furnished, as prescribed by this item and measured as provided under "Measurement", will be paid for at the unit price bid for "Concrete Pavement (Class "A" Concrete)", and for "Monolithic Curb" (when measured by the square yard), or the adjusted unit price for pavement of deficient thickness as provided under "Penalty for Deficient Pavement Thickness", which price shall be full compensation for loading, hauling, utilizing and/or disposing all excavated materials; for shaping and fine-grading the roadbed, including furnishing and applying all water required; for coating steel bar dowels, if dowels are required; for furnishing all material and constructing all joints, for all reinforcing steel, and for all manipulations, labor, equipment, appliances, tools and incidentals necessary to complete the work.

All excavation required by this item in preparation of subgrade and for the completion of the shoulders and slopes will be measured and paid for in accordance with the provisions governing the Items of "Roadway Excavation" and "Borrow", respectively, with the provision that yardage will be measured and paid for once only, regardless of the manipulations involved.

ITEM 366

CONCRETE PAVEMENT
(Continuously Reinforced)

366.1. Description. This item shall conform to the description and all the requirements and conditions governing the Item, "Concrete Pavement (Water Cement Ratio)", which is made a part of this specification, except for the additions and/or modifications specified herein.

366.2. Materials. Concrete shall conform to the requirements of the Item, "Concrete Pavement (Water Cement Ratio)".

All other materials shall conform to the requirements of Subarticle 360.2.(6) to 360.2.(16) inclusive, of the Item, "Concrete Pavement (Water Cement Ratio)", except for the following:

Where "high yield" reinforcing steel is specified or permitted, the steel shall be either (1) open-hearth, basic oxygen or electric-furnance new billet steel conforming to the requirements of ASTM Designation: A 615, Grade 60 or (2) rail steel bars for concrete reinforcement conforming to the requirements of ASTM Designation: A 616, Grade 60 (bars produced by the piling method will not be accepted). "High yield" reinforcing steel bars shall be further identified by a special marking rolled into each bar. Bars that require bending shall be grade 40 conforming to the requirements of ASTM Designation: A 615.

Where prefabricated deformed wire mats are specified or permitted, the wire shall be cold worked deformed steel wire conforming to the requirements of ASTM Designation: A 496, except that steel shall be made by open-hearth, electric-furnace, or basic oxygen processes. The prefabricated deformed wire mats shall conform to the requirements of ASTM Designation: A 497, except that all wires used shall be deformed and transverse wires shall project beyond the center line of each edge longitudinal wire as specified on the plans and in these specifications. Mats that have been bent or wires dislocated or parted during shipping or project handling shall be realigned to within one-half inch of the original horizontal plane of the mat. Mats with any portion of the wires out of vertical alignment more than one-half inch after realignment and/or wires dislocated or mutilated so that, in the opinion of the Engineer, they do not represent the original mat, shall be rejected. Deformed wire may be used for tie bars and load transfer bars that require bending. The nominal size and area and the theoretical weight of reinforcing steel wires covered by this provision are as listed in the Item, "Concrete Pavement (Water Cement Ratio)".

366.3. Equipment. Equipment required for this item shall be as specified under Article 360.3. of the Item, "Concrete Pavement (Water Cement Ratio)", with the extra provision that where specified by these specifications, a minimum of two mixers shall be required; and the requirements relating to the operation of these mixers shall be strictly adhered to.

366.4. Proportioning Of Concrete. The requirements of Subarticle 360.4.(1), (4), (5), and (6) of the Item, "Concrete Pavement (Water Cement Ratio)", shall govern for this item. Subarticle 360.4.(2), is replaced by the following:

Concrete Strength. The concrete mix will be designed to produce a flexural strength (Modulus of Rupture) not less than 575 pounds per square inch at the age of 7 days when tested in accordance with SDHPT Bulletin C-11.

The coarse aggregate factor (dry loose volume of coarse aggregate per unit volume of concrete) shall not exceed 0.85. The fine aggregate factor in the concrete mix shall be as high as practicable near the upper limit of the range that permits proper placing, finishing and texturing. Unless specified otherwise on the plans the concrete shall contain not less than 5 sacks of cement per cubic yard. The concrete mixtures shall be designed to entrain 5 percent air with a tolerance of ± 1 percent based upon measurement made on concrete immediately after discharge from the mixer.

The water-cement ratio (net gallons of water per sack of 94 pounds of cement) shall not exceed 6.25 gallons per sack. Concrete specimens shall be prepared, cured and tested as outlined in SDHPT Bulletin C-11.

366.5. Subgrade And Forms. The requirements of Article 360.5. of the Item, "Concrete Pavement (Water Cement Ratio)", shall govern for this item.

366.6. Concrete Mixing And Placing. The requirements of Article 360.6. of the Item, "Concrete Pavement (Water Cement Ratio)", supplemented by the following addition to Subarticle (4) thereof, shall govern for this item:

The spacing of bar splicing shall be distributed and conform to the requirements set forth in the plans. Splices shall have a length not less than 20 times the nominal size or diameter of the reinforcing bar with the exception that when "high yield" steel is used for the longitudinal reinforcement, splices shall have a length not less than 24 times the nominal size or diameter of the reinforcing bar. The bars shall be rigidly clamped or wired at all splices in a manner approved by the Engineer.

If welded bar lap splices are permitted in lieu of regular lap splices, all welding shall conform to the Item, "Reinforcing Steel".

Where deformed wire mats are specified, the spacing of wire splicing shall conform to the requirements set forth in the plans. Splices shall have a length not less than 31 times the nominal size or diameter of the reinforcing wire.

The mats may be clamped or wired so that the mats will retain the horizontal and vertical alignment as specified by the plans or as approved by the Engineer.

366.7. Joints. Joints shall conform to the requirements of Article 360.7. of the Item, "Concrete Pavement (Water Cement Ratio)", and to details shown on plans.

366.8. Spreading and Finishing. The requirements of Article 360.8. of the Item, "Concrete Pavement (Water Cement Ratio)", shall govern for this item subject to the additional requirements of Article 366.6.

366.9. Curing. The requirements of Article 360.9. of the Item, "Concrete Pavement (Water Cement Ratio)", shall govern for this item.

366.10. Protection of Pavement and Opening to Traffic. The requirements of Article 360.10. of the Item, "Concrete Pavement (Water Cement Ratio)", shall govern for this item.

366.11. Penalty for Deficient Pavement Thickness. The provisions of Article 360.11. of the Item, "Concrete Pavement (Water Cement Ratio)", shall govern for this item.

366.12. Measurement.

(1) When provided by plans and proposal, concrete pavement will be measured by the square yard of surface area of completed and accepted work. The surface area will be construed to include that portion of pavement area extending beneath the curbs. When concrete pavement is to be measured by the square yard and monolithic curb is required, measurement for "Monolithic Curb" will be by the linear foot complete in place.

(2) When provided by plans and proposal, concrete pavement, including monolithic curb when required, will be measured by the cubic yard of absolute volume of all materials entering the mixture as prescribed in SDHPT Bulletin C-11.

366.13. Payment. The work performed and material furnished as prescribed by this item and measured as provided under "Measurement" will be paid for at the unit price bid for "Concrete Pavement (Continuously Reinforced—High Yield Steel)", "Concrete Pavement (Continuously Reinforced—Deformed Wire Mat)", and "Monolithic Curb" (when pavement is measured by the square yard), as required, or the adjusted unit price for

pavement of deficient thickness as provided under "Penalty for Deficient Pavement Thickness". The unit price bid shall be full compensation for shaping and fine-grading of the roadbed; including furnishing and applying all water required, for furnishing, loading, and unloading, storing, hauling and handling all concrete ingredients, including all freight and royalty involved; for mixing, placing, finishing, sawing, cleaning, and sealing joints and curing all concrete; for furnishing and installing all reinforcing steel; for furnishing all materials for sealing joints and placing longitudinal and expansion joints, including all steel dowel caps and load transmission devices required, and wire and devices for placing, holding, and supporting the steel bars, load transmission devices and joint filler material in proper position; for coating steel bars where required by plans and for all manipulations, labor, equipment, appliances, tools, traffic provisions and incidentals necessary to complete the work.

Excavation required by this item in the preparation of the subgrade and for the completion of the shoulders and slopes will be measured and paid for in accordance with the provisions governing the Items of "Roadway Excavation" and "Borrow", respectively, with the provisions that yardage shall be measured and paid for once only regardless of the manipulation involved; or, where shown on plans, such work will be measured and paid for in accordance with the provisions governing the Item, "Blading". Measurement of subgrade excavation for payment shall be limited to a total width of that of the pavement plus 1 foot on each side. Payment under excavation items will not be allowed within the areas designated for "Blading".

Sprinkling and rolling, required for the compaction of the rough subgrade in advance of fine-grading, will be measured and paid for as indicated in the governing items of excavation. Maintenance of a moist condition of the subgrade in advance of fine-grading and concrete placing will not be paid for directly, but shall be considered subsidiary work, as provided above.

ITEM 368

TERMINAL ANCHORAGE
(Concrete Pavement)

368.1. Description. This item shall consist of the required excavation and construction of anchor lugs, anchor slabs and sleeper slabs of Portland cement concrete and reinforcing steel as shown on the plans, constructed as herein specified on the prepared subgrade or other base courses in conformity with the typical cross sections shown on the plans and to the lines, depths and grades established by the Engineer.

368.2. Materials. All concrete and concrete ingredients shall conform to the requirements of the governing specifications for the adjacent concrete pavement or the requirements for Class A Concrete as specified in the Item, "Concrete for Structures", or in the Item, "Concrete Pavement (Class A Concrete)".

Reinforcing Steel and all other materials except concrete shall conform to the requirements of the governing specifications for the adjacent concrete pavement or as shown on the plans.

368.3. Proportioning and Mixing. Proportioning and mixing of concrete shall be in accordance with the provisions of the items for "Concrete Pavement" or the Item, "Concrete for Structures".

368.4. Construction Methods. The required excavation for the construction of lug anchors and sleeper slabs shall conform to the requirements, except measurement and payment, of the Item, "Structural Excavation", except that no backfilling will be permitted.

The reinforcement shall be bent cold to shapes shown on the plans. All bending of hard-grade bars shall be done in the shop. Bending of other grades preferably shall be done in the shop. Bends shall be true to the shapes indicated on the contract plans, and irregularities in bending shall be cause for rejection. Unless otherwise shown on the plans, bends shall be made according to the latest code of Standard Practice of the Concrete Reinforcing Steel Institute.

Over-excavation will be avoided and any excavation for the anchors lug or sleeper slabs beyond the lines required by the plan dimensions shall be filled with Portland cement concrete of the type used in the anchor lugs or sleeper slabs at the Contractor's expense.

Preparation of subgrade and placing, finishing and curing of concrete shall conform to the requirements of the Items for "Concrete Pavement" or the Item, "Concrete for Structures".

Equipment and construction methods, satisfactory to the Engineer, which will produce the desired results may be used in lieu of those specified.

368.5. Measurement. The quantity of concrete in the anchor lugs, anchor slabs and sleeper slabs will be measured by the cubic yard to the specified neat-line dimensions shown on the plans.

The quantity of bar reinforcement furnished and placed in the anchor lugs, anchor slabs and sleeper slabs will be based on the calculated weights in pounds of the steel actually placed in accordance with the plans, with no allowance made for added bar lengths for splices requested by the Contractor nor for extra metal used when bars larger than those specified are substituted with the permission of the Engineer. Tie wires and supporting de-

vices will not be included in the calculated weights. The calculated weight for bar reinforcement will be determined, using the theoretical bar weights set forth in the Item, "Reinforcing Steel".

All excavation for anchor lugs and sleeper slabs will be measured by the cubic yard to the specified neat-line dimensions shown on the plans.

368.6. Payment. The concrete quantities, measured as provided above, will be paid for at the unit price bid per cubic yard of "Concrete (Terminal Anchorage)", which price shall be full compensation for furnishing, hauling and mixing all concrete materials; placing, curing and finishing all concrete; all grouting; furnishing and placing all joints; and for all forms and falsework, labor, tools, equipment and incidentals necessary to complete the work except as follows:

Reinforcing steel used in the concrete measured as provided above, will be paid for at the unit price bid per pound of "Reinforcing Steel (Terminal Anchorage)", which price shall be full compensation for furnishing, bending, fabricating, welding and placing the reinforcement; for all clips, blocks, metal spacers, ties, wire or other materials used for fastening reinforcement in place; and for all tools, labor, equipment and incidentals necessary to complete the work.

All excavation performed as required herein for anchor lugs and sleeper slabs and measured as provided above will be paid for at the unit price bid for "Unclassified Excavation (Terminal Anchorage)", which price shall be full compensation for furnishing all labor, materials, tools and equipment; all hauling of materials; and all incidentals necessary to complete the work. Payment for unauthorized work will not be made.

Excavation required by this item in the preparation of the subgrade for anchor slabs and for the completion of the shoulders and slopes will be measured and paid for in accordance with the provisions governing the Items of "Roadway Excavation" and "Borrow", respectively, with the provision that yardage shall be measured and paid for once only, regardless of the manipulations involved; or, where shown in plans, such work will be measured and paid for in accordance with the provisions governing the Item, "Blading". Measurement of subgrade excavation for payment shall be limited to a total width of that of the pavement plus one foot on each side. Payment under excavation items will not be allowed within the area designated for "Blading".

Sprinkling and rolling, required for the compaction of the rough subgrade in advance of fine-grading for anchor slabs, will be measured and paid for as indicated in the governing items of excavation. Maintenance of a moist condition of the subgrade in advance of fine-grading and concrete placing will not be paid for directly, but shall be considered subsidiary work, as provided above.

PART II, CONSTRUCTION DETAILS

DIVISION IV, STRUCTURES

ITEM 400

STRUCTURAL EXCAVATION

400.1. Description. This item shall govern for all excavation required for the construction of all structures, except sewers, sewer structures and appurtenances; for the disposal of all excavated material; and for backfilling around completed structures to the original ground level or as required by the plans. The work shall include all necessary pumping, bailing, sheathing, drainage, and the construction and removal of any required cofferdams. Unless otherwise provided, the work included herein shall provide for the removal of old structures or portions thereof (abutments, wingwalls, piers, etc.), trees, and all other obstructions to the proposed construction.

Excavation will not be classified, but will be bid as "Structural Excavation", which shall include the removal of all materials encountered regardless of their nature or the manner in which they are removed.

400.2. Construction Methods. Excavation shall conform to the lines and grades indicated on the plans or as revised or established by the Engineer. Any changes in the details of a structure resulting from revised excavation requirements shall be as directed by the Engineer. The Department shall have the right to substitute revised details to compensate for changes in design conditions.

When trench and/or negative projecting conditions for concrete pipe culverts are required by design, an excavation diagram will be shown on the plans. These limits of excavation shall not be exceeded.

To permit the Engineer to judge the adequacy of a proposed foundation, the Contractor, if requested, shall make soundings or take cores to determine the character of the subgrade materials. The maximum depth of soundings or cores will, in general, not exceed five feet below the proposed footing grade. Soundings shall be made at the time the excavation in each foundation is approximately complete. For drilled shafts, the minimum depth of core shall be 5 feet or a depth equal to the diameter of the shaft, whichever is greater.

When a structure is to rest on other than rock, care shall be taken not to disturb the bottom of the excavation and the final excavation to grade shall not be performed until just before the footing is placed.

Unless otherwise required herein or on the plans, rock or other hard foundation material shall be free from all loose material, clean, and cut to a

firm surface either level, stepped, or serrated, as directed by the Engineer. All seams shall be cleaned out and filled with concrete at the time the footing is placed. The quantity of concrete required for filling seams shall be measured and included for payment in the quantities for the unit of the structure for which the excavation is made.

Excavated material to be used for backfill may be deposited in storage piles located at points convenient for backfilling operations as approved by the Engineer. The survey centerline of the structure, hub lines of any unit of the structure or any other reference line established by construction stakes, shall be kept free of any obstruction. In all cases, the Contractor shall comply with the provisions of Article 5.7 in locating storage piles for excavated material.

Excavated material to be wasted shall be disposed of as directed by the Engineer. It shall not obstruct any stream or otherwise impair the efficiency or appearance of the structure or other part of the work.

For all single and multiple box culverts, pipe culverts, pipe arch culverts, long span structural plate structures, and box sewers of all types, where the soil encountered at established footing grade is a quicksand, muck, or similar unstable material, the following procedure shall be used unless other methods are called for on the plans:

The depth to which unstable material is removed shall not exceed two feet below the footing of culverts that are two feet or more in height, and shall not exceed the height of culverts for those less than two feet high unless otherwise directed by the Engineer. Excavation shall be carried at least one foot horizontally beyond the limits of the structure on all sides. All unstable soil removed shall be replaced with suitable stable material, in uniform layers of suitable depth for compaction. Each layer shall have the proper moisture content and shall be compacted by adequate rolling or tamping as required to provide a stable foundation for the structure. Soil which has sufficient stability to properly sustain the adjacent sections of the roadway embankment will be considered a suitable foundation material.

When it is not feasible to construct a stable footing as outlined above, the Contractor shall construct it by the use of special materials, such as flexible base, cement stabilized base, cement stabilized backfill or other material, as directed by the Engineer. This work will be paid for as provided in Article 400.7.

Special material used, or additional excavation made, for the Contractor's convenience to expedite the work will not be paid for.

When the material encountered at footing grade of a culvert is found to be partially rock, or incompressible material, and partially a compressible

soil which is satisfactory for the foundation, the incompressible material shall be removed to a depth of six inches below the footing grade and backfilled with a compressible material similar to that used under the rest of the structure.

When the material encountered at footing grade of a bridge bent or pier is found to be partially of rock or incompressible material, and partially of a compressible material, the foundation shall not be placed until the Engineer has inspected the footing and authorized such changes found necessary to provide an adequate foundation.

Where structural excavation is required to be done in streets or highways, maintenance and control of traffic shall be in accordance with the plans.

Where structures must be installed in streets, highways or other paved areas, the work shall include the cutting of the pavement and base to neat lines and replacement of these materials after structural excavation and backfill are completed. The replacement materials, as to type and thickness, shall be as shown on the plans. Any work done or damage to base and/or pavement outside the limits shown on the plans will not be measured for payment, but shall be restored at the Contractor's expense.

400.3. Cofferdams. The term cofferdam, whenever used in this specification, designates any temporary or removable structure constructed to hold the surrounding earth, water, or both, out of the excavation, whether the structure is formed of soil, timber, steel, concrete, or a combination of these. It includes earthen dikes, timber cribs, any type of sheet piling, removable steel shells and the like and all necessary bracing; and it shall be understood also to include the use of pumping wells or well points for the same purpose. The cost of cofferdams, when required, shall be included as a part of the bid price for excavation.

For sheet pile or other types of cofferdams which require internal bracing, the Contractor shall submit details and design calculations for structural review. The maximum stresses shall not exceed 125 percent of the allowable stresses used by the Department for the design of structures. The interior dimensions of cofferdams shall provide sufficient clearance for the construction, inspection (inside and outside), and removal of any required forms and to permit pumping outside of the forms. In general, sheet pile cofferdams shall extend well below the bottom of the footings and shall be well braced and as water-tight as practicable.

When a concrete seal is required by the plans, the design will have been based on the normal water elevations as shown on the plans. If the foundation concrete can be placed in the dry under construction conditions, the seal will not be required. If additional seal is necessary for the conditions existing at the time of construction, the seal thickness shall be increased as

deemed necessary at the expense of the Contractor. If the conditions existing at the time of construction require a seal for placing the foundation concrete in the dry, and none is provided in the plans, the Contractor shall place an adequate seal at his expense.

When the Engineer judges it to be impractical to de-water a cofferdam before placing a concrete seal around piling driven therein, the excavation may be extended below the footing grade deep enough to allow for swell of the material during pile driving operations. After driving the piling, all foundation material that has risen to a level more than one foot above the footing grade shall be removed. It is the intention of this provision to establish a construction tolerance to be applied when a foundation is being constructed under water. Where it is possible to de-water the cofferdam without placing a seal, it is considered practicable to remove the foundation material to exact footing grades after piling are driven. Backfilling in a foundation to compensate for excavation which has been extended below grade will not be permitted. Such areas below grade shall be filled with concrete at the time the seals or footings are placed. The concrete quantities involved shall be at the Contractor's expense.

Unless otherwise provided, cofferdams shall be removed by the Contractor after the completion of the substructure without disturbing or marring the structure.

400.4. Pumping or Bailing. Pumping or bailing from the interior of any foundation enclosure shall be done in a manner which precludes the possibility of movement of water through or alongside any concrete being placed. No pumping or bailing will be permitted during the placing of structural concrete, or for a period of at least 24 hours thereafter, unless from a suitable sump separated from the concrete work by a water-tight wall. Pumping or bailing during placement of seal concrete shall be only to the extent necessary to maintain a static head of water within the cofferdam. Pumping or bailing to de-water a sealed cofferdam shall not be started until the seal has aged at least 36 hours.

400.5. Backfilling.

(1) General. As soon as practical, all portions of the excavation not occupied by the permanent structure shall be backfilled. Backfill material shall be free from large or frozen lumps, wood or other extraneous material.

That portion of backfill which will not support any portion of completed roadbed or embankment shall be placed in layers not more than 10 inches in depth (loose measurement). That portion of the backfill which will support any portion of the roadbed or embankment shall be placed in uniform layers not to exceed six inches in depth (loose measurement). Each layer of backfill shall be compacted to a density comparable with the adjacent undisturbed soil.

Each layer of backfill material, if dry, shall be wetted uniformly to the moisture content required to obtain the specified density and shall be compacted to that density by means of mechanical tamps or rammers, except that the use of rolling equipment of the type generally used in compacting embankments will be permitted on portions which are accessible to such equipment.

Except for corrugated metal pipe culverts, when tamping equipment is furnished which, when proven to the satisfaction of the Engineer, will adequately compact the backfill material to the density required, the 6 inch and 10 inch lifts (loose measurement) specified above may be increased to heavier lifts not to exceed 12 inches.

If the excavation has been made through a hard material resistant to erosion, the backfill around piers and in front of abutments and wings may be ordered by the Engineer to be of stone or lean concrete. Unless otherwise provided, such backfill shall be paid for as extra work.

All portions of embankment too close to any portion of a structure to permit compaction by the use of the blading and rolling equipment used on adjoining sections of embankment, shall be placed and compacted in the same manner as specified above for backfill material. These provisions require the mechanical compaction, by means of either rolling equipment or mechanical tamps or rammers, of all backfill and embankment adjoining the barrels and wingwalls of culverts and adjoining all sides of bridge abutments and retaining walls, regardless of whether or not such embankment or backfill is above or below the original surface of the ground and regardless of whether the excavation at the structure site was performed as "Structural Excavation", "Road Excavation", or "Channel Excavation".

Unless otherwise provided by the plans or special provisions, hand tamping will not be accepted as an alternate for mechanical compaction. As a general rule, material used for backfilling the portions described in this paragraph shall be free of any appreciable amount of gravel or stone particles more than four inches in greatest dimension and shall be of a gradation that permits thorough compaction. When in the opinion of the Engineer, such material is not readily available, the use of rock or gravel mixed with soil will be permitted, provided that no particles larger than 12 inches in the greatest and 6 inches in least dimension are used. The percentage of fines shall be sufficient to fill all voids and insure a uniform and thoroughly compacted mass of proper density. When required by the plans or by written order of the Engineer, cement stabilized material shall be used for backfilling.

All portions of backfill described in the preceding paragraph shall be compacted to the same density requirements specified for the adjoining sections of embankment in accordance with the governing specifications therefor.

Cohesionless materials, with no binder, such as sand, may be used for general backfilling purposes. Compaction of cohesionless materials shall be done with vibratory equipment, water ponding or a combination thereof, as directed by the Engineer.

Where no embankment is involved on the project and no specifications therefor are included in the contract, all backfill shall be compacted to a density comparable with the adjacent undisturbed material.

No backfill shall be placed against any abutment or retaining wall until the structure has been in place at least seven days. No backfill shall be placed adjacent to or over single and multiple boxes until the top slab has attained 500 psi flexural strength. Backfill placed around piers shall be deposited on both sides to approximately the same elevation at the same time.

Care shall be taken to prevent any wedging action of backfill against the structure, and the slopes bounding the excavation shall be stepped or serrated to prevent such action.

(2) **Pipe Culverts.** The following requirements shall apply to the backfilling of pipe culverts in addition to the pertinent portions of the general requirements given in the preceding section.

Selected materials from excavation, borrow or other approved material shall be wetted, if required, and placed along both sides of the pipe equally, in uniform layers not exceeding six inches in depth (loose measurement) and thoroughly compacted so that there will be a berm of thoroughly compacted material on each side of the pipe. The method and degree of compaction shall be the same as specified in Subarticle 400.5.(1) for portions of backfill within the limits of embankment or roadbed.

Backfilling shall be continued in this manner to the elevation of the top of the pipe. Special care shall be taken to secure thorough compaction of the material placed under the haunches of the pipe. All fill or backfill below the top of pipe shall be compacted mechanically in the manner and to the density prescribed above, regardless of whether or not such material is placed within the limits of the embankment or roadbed.

In the case of pipe placed in trenches, that portion of the backfill above the top of the pipe which supports embankment or the roadbed, shall receive mechanical compaction as specified in Subarticle 400.5.(1). The portion which will not support any portion of embankment or roadbed shall be placed in layers not more than 10 inches in depth (loose measurement) and shall be compacted by whatever means the Contractor chooses, to a density comparable with the adjacent, undisturbed material. Embankment above the top of pipe shall be placed in accordance with the provisions for placing roadway embankment as prescribed in the pertinent specifications. During

construction adequate cover must be provided to protect the structure from damage.

Whenever excavation is made for installing culverts across private property or beyond the limits of the embankment, the topsoil removed in excavating the trench shall be kept separate and replaced as nearly as feasible in its original position, and the entire area involved in the construction operations shall be restored to a presentable condition.

(3) **Cement Stabilized Backfill.** When indicated on the plans, trenches shall be backfilled to the elevations shown, with stabilized backfill containing aggregate, water and a minimum of 2 sacks of Portland cement per cubic yard of material as placed. Cement and water shall conform to the requirements of the Item, "Concrete Pavement". Aggregate shall be as noted on the plans and/or as approved by the Engineer.

Cement stabilized backfill below the spring line of pipe culverts shall be sufficiently plastic to completely fill all voids in the trench. The pipe shall be held in alignment by jacks or other suitable means to prevent the mortared joints from cracking due to displacement caused by placing the backfill material.

Hand-operated mechanical tampers may be used with approval of the Engineer for compacting this backfill.

400.6. Measurement. Unless otherwise shown on the plans, structural excavation for pipe headwalls, inlets, manholes, culvert widening (extensions), bridge abutments, and side road and private entrance pipe culverts will not be measured but shall be considered subsidiary to the various bid items.

Determination of quantities for structural excavation shall be made by the method of average end areas using the following limits to establish templates for measurement.

(1) For all excavation requiring measurement, except that required for the barrels of pipe culverts; for structural plate pipes, pipe arches, arches and underpasses; and for long span structural plate structures; no material outside of vertical planes one foot beyond the edges of the footings and parallel thereto will be included.

(2) For pipe culverts of 42 inches or less nominal or equivalent diameter, no material outside of vertical planes one foot beyond the horizontal projection of the outside surfaces of the pipe and parallel thereto will be included. For pipe culverts more than 42 inches in nominal or equivalent diameter, no material outside of vertical planes located two feet beyond the horizontal projection of the outside surfaces of the pipe and parallel thereto will be included. Excavation for pipe culverts shall be measured between the extreme ends of the completed structure, including any end ap-

purtenances, as shown on the plans and from centerline to centerline of inlets, manholes, etc. therein. When excavation for appurtenances is measured for payment, the limits of excavation for the culvert pipe shall not overlap those of the appurtenances.

(3) For structural plate pipes, pipe arches, arches and underpasses, and for long span structural plate structures, no material outside of vertical planes three feet beyond the horizontal projection of the outside surfaces of the structure(s) and parallel thereto will be included, except that when the quality of the existing native soil or embankment is less than that of the proposed backfill material, as required by the Items, "Structural Plate Structures" and "Long Span Structural Plate Structures", the excavation shall be extended for measurement, to vertical planes located at one-half of the span or two-thirds of the total rise of the structure, whichever is greater, beyond the horizontal projection of the outside surfaces of the structure(s) and parallel thereto.

(4) If a cofferdam, as herein defined is used, the limitations of Subarticle 400.6.(1) shall apply just as if no cofferdam were used.

(5) Where excavation in addition to that allowed for the footings is required for other portions of the structure, such as for the cap, cross strut, or tie beam of a pier or bent or for the superstructure, measurements for such additional excavation will be limited laterally by vertical planes one foot beyond the face of the member and parallel thereto and vertically to a depth of one foot below the bottom of such member.

(6) No measurement will be made of any excavation necessary for placing forms or falsework except as allowed by the above conditions.

(7) At all structure sites except at culverts, the measurement of structural excavation will include only material below or outside the limits of the completed road or channel excavation. Excavation for side road and private entrance culverts will not be measured for payment but shall be subsidiary to the various items. Culvert excavation will be measured in accordance with Article 400.6.(8).

(8) For all culverts, except for side road and private entrance culverts, all excavation within the limits of the structure and below or outside the limits of the completed roadway excavation, will be measured as culvert excavation. Where the overall normal width of the culvert is 12 feet or less, the excavation will be measured as "Structural Excavation, Culvert, Small". Where the overall normal width of the culvert exceeds 12 feet, measurement will be as "Structural Excavation, Culvert, Large".

(9) Where excavation diagrams are shown on the plans, they shall take precedence over these provisions.

(10) Measurement will not include materials removed below footing grades to compensate for anticipated swelling due to pile driving, nor will it include material required to be removed due to swelling beyond the specified limits during pile driving operations.

(11) Measurement will not include additional yardage caused by slips, slides, cave-ins, silting, or fill material due to the action of the elements or the carelessness of the Contractor.

(12) Where rock, other incompressible or unstable material is undercut to provide suitable foundation for pipe or box culverts, such material below grade, ordered by the Engineer to be removed, will be measured for payment.

(13) Except for any required undercut, quantities for "Structural Excavation", as shown on the plans and in the proposal, shall be considered as final quantities and no further measurement will be required, unless the alignment, grades or structure locations are revised by the Engineer during construction. Final determination of quantities for individual structures will be made, if in the opinion of the Engineer or upon evidence furnished by the Contractor, substantial variations exist between quantities shown on the plans and actual quantities due to changes in cross sections or apparent errors, except that no allowance will be made for any variation from plan quantity incurred by an alternate bid for pipe culverts. Excavation quantities for foundations shown on the plans and in the proposal where cofferdams are required shall be considered as final quantities and no further measurement will be made.

(14) For any footing, foundation, or other structure unit except where cofferdams are required within the scope of this specification, additional measurement will be made of the volume of excavation involved in the lowering or raising of the elevation of a footing, foundation, or structure unit, when such grade change is authorized by the Engineer. Measurement will be made by the addition to, or the deduction from, the original quantities for the volume of excavation involved in the authorized grade change.

(15) Cement stabilized backfill shall be measured by the backfill diagram as shown on the plans. The quantity of "Cement Stabilized Backfill" as shown on the plans and in the proposal shall be considered as final quantities and no further measurement will be required, unless alignment or elevations as shown on the plans are revised by the Engineer. If such revisions result in an increase or decrease in this quantity, the final quantity will be revised by the amount represented by the changes in alignment or grade.

(16) The work to be done in the cutting and restoring of pavement will be measured by the square yard in accordance with the dimensions shown

on the plans. The excavation below the pavement and/or base shall be measured as structural excavation.

400.7. **Payment.** Payment for all work prescribed under this item and measured as provided above will be made at the unit price bid per cubic yard for the particular class of excavation specified on the plans in the amount shown on the plans and in the proposal. Revised plan quantities shall be in accordance with Subarticles 400.6. (13) and (14) and the fourth paragraph of this Article. Payment for the removal of unstable and incompressible material will be as shown herein.

Payment for removal and replacement of unstable or incompressible material below the footing grades of culverts as provided for in Article 400.2. will be made as follows:

When the plans specify or when the Engineer directs the use of special materials such as flexible base, cement stabilized base, cement stabilized backfill or other special material, payment for excavation below the footing grades shall be made at the unit price bid for "Structural Excavation". Payment for furnishing, hauling, placing and compacting the flexible base, cement stabilized base, cement stabilized backfill or other special material will be made at the unit price bid for these items in the contract or in accordance with Article 9.4., in cases where the required material is not a bid item.

Where special materials are not required or specified, payment for the removal and replacement of unstable and/or incompressible material will be made at a price equal to 200 percent of the unit price bid per cubic yard for "Structural Excavation" which price shall be full compensation for removing the unstable or incompressible material, furnishing, hauling, placing and compacting suitable material required to replace it, and for all labor, equipment, tools and incidentals necessary to complete the work.

If no direct method of payment is provided in the contract for culvert excavation, the removal and replacement of unstable or incompressible material, when such work is authorized by the Engineer, will be measured and paid for at Fifteen Dollars, ($15.00) per cubic yard.

Payment for "Cement Stabilized Backfill" measured as prescribed above shall be made at the unit price bid per cubic yard of "Cement Stabilized Backfill".

Should the Engineer judge it necessary to lower bridge foundations to an elevation below the grade shown on the plans, payment for "Structural Excavation" required below plan grade down to and including an elevation five feet below plan grade for any individual footing will be made at a unit price equal to 115 percent of the contract unit bid price. Payment for the ex-

cavation from an elevation over five feet below plan grade down to and including an elevation 10 feet below plan grade will be made at a unit price equal to 125 percent of the contract unit bid price for "Structural Excavation". No increase in unit price will be allowed for any other bid items of the contract, and no additional extra compensation will be allowed for any required cofferdam adjustments made necessary by the lowering of footings.

In cases where the extra depths required for any bridge footing or footings exceeds 10 feet, a supplemental agreement shall be made covering the quantities removed from depths in excess of 10 feet below plan grade.

Since this item provides for an adjustment in unit price for additional excavation quantities, the 20 percent limitation referred to in Item 4 will not apply to overruns due to extra depth of 10 feet or less.

No direct payment will be made for backfilling around structures. Payment for the backfilling and compacting of areas which were removed as structural excavation shall be included in the unit price bid for structural excavation.

Unless otherwise shown on the plans, for structural excavation which has been completed to the satisfaction of the Engineer, but not backfilled, a partial payment of 50 percent of the bid price will be made. The remaining amount will be paid upon the satisfactory completion of the backfilling.

The excavation required for shaping the slopes of header banks which were built by prior contract, and upon which riprap is to be placed, will be included for payment at the unit price bid per cubic yard of "Structural Excavation, Riprap."

Payment for cutting and restoring pavement as prescribed herein shall be made at the unit price bid for "Cutting and Restoring Pavement".

Payment for all work prescribed under this item shall be full compensation for all excavation and backfill including placing, sprinkling and compaction of material; all soundings; constructing all cofferdams; all dewatering; and for furnishing all materials, hauling, labor, equipment, tools, sheathing, bracing, cofferdams, pumps, drills, explosives, disposition of surplus material, cutting pavement and base to neat lines and incidentals necessary to complete the work, except for specific allowances stated herein.

ITEM 401

EXCAVATION AND BACKFILL FOR SEWERS

401.1 Description. This item shall govern for all excavation required for the construction of sewers, sewer structures, appurtenances and connections, and for the backfilling around completed sewers to the level of the

original ground, all in conformity with the locations, lines, and grades shown on the plans or as given by the Engineer, and in accordance with these specifications. This item shall also govern for any necessary pumping or bailing and drainage, and all sheathing and bracing of trench walls. Unless otherwise provided, this item shall govern for the removal and disposition of tree stumps and other obstructions, of old structures or portions thereof (such as house foundations, old sewers, and sewer appurtenances), the blocking of the ends of abandoned sewers cut and left in place, and the restoration of existing utilities damaged in the process of excavation. Also governed by this item are the cutting and restoration of pavement and base courses, the furnishing and placing of cement stabilized backfill, the hauling and disposition of surplus materials, and the bridging of trenches and other provisions for maintenance of traffic or access as provided herein.

401.2. Construction Methods.

(1) **Excavation.** Unless otherwise specified on the plans by an excavation diagram, all sewers shall be constructed in an open cut with vertical sides to a point one foot above the pipe. When site conditions do not prohibit the sloping of the cut, the excavation above this point may be stepped and/or the sides laid back to a stable slope. Required vertical sides shall be sheathed and braced to the extent necessary to maintain the sides of the required vertical excavation throughout the construction period.

Excavation for monolithic pipe sewers shall have a width below the horizontal diameter of the pipe equal to the outside horizontal diameter unless otherwise shown by excavation diagram.

For all pipe sewers to be constructed in fill above natural ground, the embankment shall first be constructed to an elevation not less than 1 foot above the top of the pipe, after which excavation for the pipe shall be made as noted above.

For pipe sewers of all types, where the soil encountered at established footing grade is a quicksand, muck, or similar unstable material the following procedure shall be used unless other methods are called for on the plans:

All unstable soil shall be removed to a depth of 2 feet below bottom of sewer for sewers 2 feet or more in height and to a depth equal to the height of sewer for sewers less than 2 feet in height. Such excavation shall be carried at least 1 foot beyond the horizontal limits of the structure on all sides. All unstable soil so removed shall be replaced with suitable stable material, placed in uniform layers of suitable depth as directed by the Engineer, and each layer shall be wetted, if necessary, and compacted by mechanical tamping as required to provide a stable foundation for the structure. Soil which is considered to be of sufficient

stability to sustain the adjacent sections of the roadway embankment will be considered a suitable foundation material for the culvert or sewer.

When the material encountered at footing grade of a sewer is found to be partially rock or other incompressible material and partially a soil or material that is compressible, but otherwise satisfactory for the foundation, the incompressible material shall be removed for a depth of 6 inches below the footing grade and backfilled with a material similar to the compressible material used for the rest of the structure.

For unstable conditions requiring outside forms, seals, sheathing, and bracing, or where ground water is encountered, any additional excavation and backfill required shall be done at the Contractor's expense.

(2) **Shaping of Excavation.** For precast concrete pipe sewers, the excavation shall be undercut a minimum depth sufficient to accommodate the class of bedding indicated on the plans and conforming to bedding requirements of the Item, "Reinforced Concrete Pipe Culverts". Where cement stabilized backfill is indicated on the plans, the excavation shall be undercut a minimum of 4 inches and backfilled with stabilized material to support the pipe to grade.

(3) **Dewatering Excavation.** Sewers shall not be constructed or the sewer pipe laid in the presence of water. All water shall be removed from the excavation sufficiently prior to the sewer placing operation to insure a dry, firm bed on which to place the sewer, and shall be maintained in such unwatered condition until all concrete and mortar is set. Removal of water may be accomplished by bailing, pumping, or by a well-point installation as conditions warrant.

In the event that the excavation cannot be dewatered to the point where the pipe subgrade is free of mud, or it is difficult to keep the reinforcing steel clean in cast-in-place monolithic sewers, a seal shall be used in the bottom of the excavation. Such seal shall consist of a lean concrete mixture (not less than 3 sacks of cement per cubic yard), with a minimum depth of 3 inches.

(4) **Excavation in Streets.** Where excavation for sewers is required in streets, maintenance and control of traffic shall be in accordance with the approved traffic control plan.

(5) **Removing Old Structures.** When old masonry structures or foundations are encountered in the excavation, such obstructions shall be removed for the full width of the excavation and to a depth of 1 foot below the bottom. When old inlets or manholes are encountered and no plan provision is made for adjustment or connection to the new sewers, such manholes and inlets shall be removed completely to a depth 1 foot below the bottom of the excavation. In each instance, the bottom of the excavation

shall be restored to grade by backfilling and compacting by the methods provided hereinafter for backfill. Where the excavation cuts through storm or sanitary sewers which are known to be abandoned, these sewers shall be cut flush with the sides, and blocked with a concrete plug in a manner satisfactory to the Engineer.

(6) **Protection of Utilities.** The Contractor shall conduct his work with minimum disturbance to existing utilities. Particular care shall be exercised to avoid the cutting or breakage of underground utility lines. Such lines, if broken, shall be restored promptly, at the Contractor's expense. When active sanitary sewer lines are cut during excavation operations, temporary flumes shall be provided across the excavation, while open, and the lines shall be restored when the backfilling has progressed to the original bedding lines of the sewer so cut.

The Contractor shall inform utility owners sufficiently in advance of his operations to enable them to reroute, provide temporary detours, or to make other adjustments to utility lines in order that he may proceed with his work with a minimum of delay and expense. The Contractor shall cooperate with all utility owners concerned in effecting any utility adjustments necessary and shall not hold the State liable for any expense due to delay or additional work because of conflicts.

(7) **Surplus Excavated Materials.** All materials from excavation operations not required for backfilling, if considered suitable, shall be placed in embankments in accordance with the Item, "Embankment". All material not suitable for use in embankments will be declared surplus by the Engineer and shall become the property of the Contractor to dispose of as he wishes, without injury to the State or any individual. Such surplus material shall be removed from the work promptly following the completion of the portion of the sewer involved and disposed of in a manner satisfactory to the Engineer.

(8) **Backfill.** Excavation shall be backfilled with material selected from the sewer excavation, or obtained from other sources, which is free from stones of such size as to interfere with compaction and is free from large lumps which will not break down readily under compaction. The Engineer shall have the right to reject any material containing more than 20 percent by weight of material retained on a 3 inch sieve, or material excavated in such a manner as to produce large lumps not easily broken down or which cannot be spread in loose layers. In general, material excavated by means of a trenching machine will meet the requirements above provided large stones are not present.

Cohesionless materials, with no binder, such as sand, may be used for general backfilling purposes. Compaction of cohesionless materials shall be done with vibratory equipment, water ponding or a combination thereof, as directed by the Engineer.

After the bedding and pipes have been installed as required, the selected materials shall be brought to proper moisture condition, placed along both sides of the pipe equally, in uniform layers not exceeding 6 inches in depth (loose measurement), and each lift thoroughly compacted mechanically.

Filling and/or backfilling shall be continued in this manner to the elevation of the top of the pipe. Special care shall be taken to secure thorough compaction of the materials placed under the haunches of the pipe.

That portion of the backfill above the top of the pipe which supports an embankment or roadbed shall receive mechanical compaction. The portion which will not support any part of the embankment or roadbed shall be placed in layers not more than 10 inches in depth (loose measurement) and shall be compacted by whatever means the Contractor chooses to a density comparable with the adjacent undisturbed material.

During construction, adequate cover must be provided to protect the pipe sewer from damage.

Where sewers extend beyond the toe of slope of the embankment and the depth of cover provided by backfill to the original ground level is less than the minimum required by the specifications for the type of pipe involved, additional material shall be placed and compacted, as herein specified for backfill outside the limits of the roadbed, until this minimum cover has been provided.

Whenever excavation is made for installing sewers across private property or beyond the limits of the embankment, the top soil removed in the excavation shall be kept separate and replaced, as nearly as feasible, in its original position, and the entire area involved in the construction operations shall be restored to a presentable condition.

When indicated on the plans, the excavation shall be backfilled to the elevations shown with stabilized backfill containing aggregate, water and a minimum of 2 sacks of Portland cement per cubic yard of material as placed. Cement and water shall conform to the requirements of the Item, "Concrete Pavement". Aggregate shall be as noted on the plans and/or as approved by the Engineer.

Backfill below the top of sewers, manholes, inlets, or other structures shall be placed and compacted equally along both sides of the structure so as to prevent strain on or displacement of the structure.

Cement stabilized backfill below the spring line of the pipe shall be sufficiently plastic to completely fill all voids in the trench. The pipe shall be held in alignment by jacks or other suitable means to prevent the mortared joints from cracking due to displacement caused by placing the backfill material.

Hand-operated mechanical tampers may be used with approval of the Engineer for compacting backfill.

(9) **Cutting and Restoring Pavement.** Where sewers must be installed in streets or other paved areas, the work shall include the cutting of the pavement and base to neat lines and replacement of these materials after sewer excavation and backfill are completed. The replacement materials, as to type and thickness, shall be as shown on the plans. Any work done or damage to base and/or pavement outside the limits shown on the plans will not be measured for payment, but shall be restored at the Contractor's entire expense.

401.3. **Measurement.** Determination of plan quantities for "Sewer Excavation" will be made by the method of average end area, from centerline to centerline of the various appurtenances, using the following limits to establish templates for measurements. Unless otherwise shown on the plans, any excavation beyond these limits for the construction of sewer appurtenances will not be measured for payment but shall be considered subsidiary to the various bid items.

(1) For all jointed pipe sewers of 42 inches or less nominal or equivalent diameter, no material outside of vertical planes 1 foot beyond the horizontal projection of the outside surfaces of the pipe and parallel thereto will be included.

(2) For jointed pipe sewers more than 42 inches nominal or equivalent diameter, no material outside of vertical planes located 2 feet beyond the horizontal projection of the outside surfaces of the pipe and parallel thereto will be included.

(3) For monolithic sewers, no material outside the vertical plane of the outside surface of the pipe and parallel thereto will be included.

(4) When excavation for sewer appurtenances is measured for payment, no material outside of vertical planes 1 foot beyond the edges of the footings and parallel thereto will be included and the limits of excavation for sewer pipe shall not overlap those of the appurtenances.

(5) Where rock, other incompressible material, or unstable material is undercut in order to provide suitable foundation for sewers, such material below grade as is ordered by the Engineer to be removed, will be measured for payment.

(6) For all sewers where the contract plans call for road excavation, such road excavation shall be assumed to have been completed before starting sewer excavation and the measurement of sewer excavation will include only material below or outside the limits of the completed road excavation.

(7) Excavation quantities required for constructing sewers in fill above natural ground, as specified in Subarticle 401.2.(1) paragraph 3, will be measured for payment. Quantities will include that area as specified in (1), (2) or

(3) above plus 1 foot above the top of the pipe, regardless of the height of fill previously made.

(8) Cement stabilized backfill shall be measured as dimensioned on backfill diagrams as shown on the plans.

(9) In all cases where excavation digrams are shown on the plans, such diagrams shall take precedence over these limits of measurement.

(10) Quantities for "Sewer Excavation" and "Cement Stabilized Backfill" as shown on the plans and in the proposal shall be considered as final quantities and no further measurement will be required, unless the alignment, grades or sewer locations are revised by the Engineer during construction. In addition, final determination of sewer excavation and cement stabilized backfill quantities for individual sewer mains and laterals will be made, if, in the opinion of the Engineer or upon evidence furnished by the Contractor, substantial variations exist between quantities shown on the plans and actual quantities due to changes in cross sections or apparent errors.

(11) The work to be done in the cutting and restoring of pavement will be measured by the square yard in accordance with the dimensions shown on the plans. The excavation below the pavement and/or base shall be measured as sewer excavation.

401.4. Payment. Payment for sewer excavation, measured as prescribed above shall be made at the unit price bid per cubic yard of "Sewer Excavation".

Payment for backfilling and compaction in accordance with these specifications shall be included in the unit price bid for "Sewer Excavation".

Unless otherwise shown on the plans, for sewer excavation which has been completed to the satisfaction of the Engineer, but not backfilled, a partial payment of 50 percent of the bid price will be made. The remaining amount will be paid upon the satisfactory completion of the backfilling.

Payment for removal and replacement of unstable material and incompressible material below the footing grades of pipe sewers, measured as provided above, will be made at the unit price equal to 200 percent of the unit price bid per cubic yard for "Sewer Excavation".

Payment for "Cement Stabilized Backfill" measured as prescribed above shall be made at the unit price bid per cubic yard of "Cement Stabilized Backfill".

Payment for cutting and restoring pavement as prescribed herein shall be made at the unit price bid for "Cutting and Restoring Pavement".

Payment for all work prescribed under this item shall be full compensation for all excavation and backfill including placing, sprinkling and compaction of material; all soundings; constructing all cofferdams; all dewatering; and for furnishing all materials, hauling, labor, equipment, tools, sheathing, bracing, cofferdams, pumps, drills, explosives, disposition of surplus material, cutting pavement and base to neat lines and incidentals necessary to complete the work, except for specific allowances stated above.

ITEM 404

DRIVING PILING

404.1 Description. This item shall govern for the equipment required and for the methods to be followed for driving piling. The requirements herein are minimum. Strict compliance with these requirements will not relieve the Contractor of the responsibility of adopting whatever additional provisions may be necessary to insure the successful completion of the work.

404.2. General. Unless otherwise shown on the plans or directed by the Engineer, the embankment at bridge ends shall be completed prior to the driving of abutment piling.

Foundation piling shall not be driven until the excavation is approximately complete.

Driving of either precast or prestressed piling, including build-ups, will not be permitted for a minimum of 14 days after placing concrete. Piling to be driven in a saltwater environment shall not be driven for a minimum of 21 days after concrete placement.

Any piling raised when driving adjacent piling shall be redriven. Broken, split, or displaced piling shall be withdrawn and properly replaced, or corrected as specified by the Engineer based on a design analysis.

404.3 Tolerance for Driving. Trestle piling shall be driven to the required vertical or batter alignment. Allowable variations from plan alignment shall not exceed the following:

Transverse to the centerline of bent, the top of the piling shall not be more than 2 inches from the position shown on the plans.
Parallel to the centerline of the bent, the top of the piling shall not be more than 4 inches from the position shown on the plans.

Foundation piling shall be driven to the required vertical or batter alignment. The top of the pile shall not be more than 4 inches in any direction from the position shown on the plans. If the center of gravity of the pile group varies by more than 3 inches from the center of gravity determined from plan location, a structural analysis will be required.

Foundation piling shall be cut off reasonably square at the elevation shown on the plans. A tolerance of not more than 2 inches above or below established cut off grade will be permitted.

The minimum edge distance for piling in a footing shall be 5 inches. Additional concrete required to obtain this edge distance and the specified reinforcing steel cover shall be at the Contractor's expense.

Piling shall be driven in alignment holes and/or with templates when necessary to comply with the above tolerances. The depth of alignment holes normally shall not exceed 5 feet.

404.4. **Protection of Pile Heads.** A structural steel driving head suitable for the type and size of piling being driven shall be used.

For concrete piling, a cushion block shall be provided between the driving head and the top of the pile. It shall be a minimum of four inches thick for short piling (50 feet or less) and at least six inches thick for longer piling. The cushion block shall be multiple layers of one of the following:

(1) Three-quarter inch or one inch structural grade southern pine or fir plywood,

(2) Green oak or gum, with the grain of the wood horizontal,

(3) Asbestos discs, or

(4) Other material which has been pretested and approved by the Department.

Careful attention shall be given to the condition of the cushioning material. Generally, one cushion block shall not be used to drive more than three piling; cushioning shall be changed more frequently if necessary to prevent damage. For concrete piling a tight fitting driving helmet will not be permitted. Some room for slight movement must be provided, however the driving helmet shall not be large enough for the pile head to rotate freely.

Type	Type Hammer		Weight of Ram Min.	Weight of Ram Max.	Maximum Ram Stroke ft.	Minimum(3) Hammer Energy Foot-Pounds
Timber	Gravity		2000	3500	15	330R
	Power	Steam, Air, Hydraulic	2000		5	
		Diesel	2000		10	
Steel H	Gravity		2000	5000	10	250 R or 2½ W_p whichever is larger
	Power	Steam, Air, Hydraulic	3000		5	
		Diesel	2000		10	
Metal Shell	Gravity		2000	5000	10	350R(1)
	Power	Steam, Air, Hydraulic	3000		5	
		Diesel	2000		10	
Metal Shell Driven with mandrel insert	Gravity		2000		10	220R but not less than one Ft-Lb per Lb of pile weight, including weight of mandrel
	Power	Steam, Air, Hydraulic	3000		5	
		Diesel	2000		8 See Note (2)	
Concrete	Power	Steam, Air, Hydraulic	3000 but not less than 1/4 W_p		5	250R but not less than one Ft-Lb per Lb of pile weight
		Diesel(2)	2700 but not less than 1/4 W_p		8 See Note (2)	

R = Design load in tons
W_p = Weight of pile in pounds based on plan length.

(1) Minimum hammer energy for metal shell piling with plan lengths over 65 ft. shall be 430R.
(2) Diesel hammers with less ram weight and/or greater ram stroke may be permitted if a wave equation analysis indicates that the combination of ram weight, stroke, and cushioning will not overstress the piling.
(3) See Subarticle 404.10.2, paragraph 4.

Table 1
SIZE OF DRIVING EQUIPMENT

404.5. Driving Equipment. Pile driving shall be done with power hammers, unless gravity hammers are permitted by the plans.

Boiler or air compressor capacity furnished shall be at least equal to that specified by the manufacturer of the hammer used. The boiler or compressor shall be equipped with an accurate pressure gauge at all times.

Enclosed ram diesel hammers shall be equipped with a gauge and charts to evaluate the equivalent energy being produced. Calibration of the gauge and charts will be required.

The valve mechanism and other parts of all power hammers shall be maintained in first class condition so the hammers will operate at the speed and stroke length specified by the manufacturer.

Cap Block cushioning material, when used between the ram and anvil or follow block, shall consist of layers of southern pine or fir plywood, oak,

gum, asbestos discs, micarta plastic or other material which has been submitted and pretested by the Department and approved by the Engineer.

Steam or air hammers shall be operated at not less than 80 percent of the manufacturer's rated capacity.

The size of hammer shall comply with Table 1.

When gravity hammers are used, the height of fall shall be regulated to avoid injury to the piling and shall in no case exceed the maximum stroke shown in Table 1. The Contractor shall furnish the Engineer a certified public scale weight of the hammer to be used.

To control excessive stress in concrete piling during driving, the Engineer may require:

(1) Increase in cushion thickness,

(2) Reduction of ram stroke,

(3) Reduced ram stroke for driving through very soft soil and longer ram stroke as soil resistance increases,

(4) Combination of increased cushion thickness and reduced ram stroke,

(5) Heavier ram with a shorter stroke,

(6) Combination of increased cushion thickness and heavier ram with shorter stroke, or

(7) Use of pilot holes or jetting when driving through hard or alternating hard and soft strata.

All test piling in a structure, or in any approved segment thereof shall be driven with the same hammer. The same type and size hammer shall be used to drive the remainder of the piling in the structure, or in the approved segment thereof, that was used to drive the test piling.

Pile drivers shall be equipped with leads which are constructed to afford freedom of movement of the hammer and provide adequate support to the pile during driving. The longitudinal axis of the leads, hammers and pile shall coincide.

Except where piling are driven through water, the leads shall be long enough so that a follower will not be necessary. Where a follower is required when driving piling underwater, one pile in each 10 shall be long enough to permit driving without a follower. It shall be driven as a test pile for proper correlation of the follower-driven piling. Payment will be made as regular piling.

Hammers which are designed to operate underwater may be used for underwater driving without a follower, and without the correlation required above for other hammers.

404.6. **Rating of Diesel Hammers.** For initial rating of diesel hammers to determine compliance with the requirements of Table 1, the height of fall of the ram of the single-acting (open end) hammer will be 7 feet. For a double-acting (enclosed ram) hammer, the energy rating shall be 85 percent of the rated output by the manufacturer.

404.7. **Penetration.** Except as noted herein, the piling lengths shown on the plans are the lengths estimated to give required bearing and are for estimating purposes only.

The elevation shown on the plans as "minimum penetration" is the minimum depth to which it is necessary to drive the pile to satisfy the design requirements for lateral stability. Piling shall be driven to this approximate elevation and to such greater depths required to obtain the specified bearing resistance.

When the plans show a "required penetration" into a particular stratum of rock, shale, or other hard material, this penetration will be required although the stratum may be found at a higher or lower elevation than indicated on the plans.

When test piling or test loads are used, subsequent pile lengths will be established by the Engineer on the basis of these test data. These lengths shall then supersede all other requirements and will be considered lengths for minimum penetration. In these cases, piling shall be driven to this approximate elevation and to greater depths as required to obtain the specified bearing resistance.

Where no penetration criteria is shown on the plans and test piling or test loads are not used, the piling shall be driven to within 5 feet of plan length and to such greater depths required to obtain the specified bearing resistance.

When the specified penetration cannot be obtained by driving without damage to the piling, the Contractor shall provide either pilot holes or jetting equipment or a combination of both.

404.8. **Pilot Holes.** Except as specified herein, pilot holes shall not be deeper than five feet below bottom of footings for foundation piling or ten feet below finished ground line for trestle piling unless the specified penetration cannot be obtained by using the depth of holes indicated. When deeper pilot holes are required, their size and depth shall be determined from the results of trial operations on the first few piling driven and/or available test pile data. Any excess depth and/or size of pilot holes shall require approval by the Engineer. Generally, the diameter of hole permitted

will be approximately four inches less than the diagonal of square or steel-H piling, and one inch less than the diameter of round piling. Hole size and depth may be varied by the Engineer to obtain penetration and/or sufficient bearing value. Pilot holes shall extend through all embankment to natural ground.

Where a pilot hole is required in granular material that cannot be sealed off by ordinary drilling methods, a casing may be required around the boring device deep enough to prevent loose material from falling into the pilot hole.

The piling shall be driven below the depth of the pilot hole a minimum of one foot or 100 blows, but not less than the approximate penetration and required bearing. If damage to the pile is apparent, driving shall cease.

404.9. **Jetting.** Jetting will be required when the specified penetration cannot be obtained by driving and other methods are not feasible. Prior to jetting, the Contractor shall submit details of the proposed methods to the Engineer for approval. The Engineer may authorize varying depths of jetting to achieve the desired results.

Jetting may be done as required in conjunction with driving but only to the depth approved by the Engineer.

For jetting operations, sufficient power shall be provided to simultaneously operate a minimum of two 2-1/2 inch diameter pipes equipped with three-fourths inch nozzles at a pressure of 150 psi.

The jetting may be performed with one or two jets as determined by the Contractor and approved by the Engineer from the results of trial operations.

The final penetration of the pile shall be obtained by driving below the depth of jetting a minimum of one foot or 100 hammer blows, but to not less than the approximate penetration and required bearing value. If damage to the pile is apparent, driving shall cease.

404.10. **Bearing Evaluation.**

1. **Hammer Formula Method.** Unless otherwise shown on the plans, the dynamic bearing resistance of piling will be determined by one of the following formulas.

For gravity hammers:

$$P = \frac{2WH}{S + 1.0}$$

When the energy delivered (WxH) by the gravity hammer is 24,000 foot pounds or greater, and the penetration does not exceed one-half inch per

blow for the last 40 blows delivered (without increasing), the bearing resistance will be determined by:

$$P = \frac{2WH}{3S}$$

For single-acting power hammers:

$$P = \frac{2WH}{S + 0.1}$$

For double-acting power hammers:

$$P = \frac{2E}{S + 0.1}$$

P = dynamic resistance in pounds.

S = average penetration in inches per blows for the last 20 blows.

W = weight of ram in pounds.

H = height of fall of ram in feet. (For the single-acting diesel hammer, H may be determined either by visual observation of the ram against a calibrated rod mounted on the hammer or by an approved stroke indicator and blow count logging device.)

E = manufacturer's rated energy in foot-pounds (for double-acting power hammers).

E = the equivalent energy in foot-pounds, determined by a calibrated gauge attached to the hammer and taken when the average penetration in inches per blow is determined (for enclosed ram diesel hammer).

2. **Wave Equation Method.** When it is specified on the plans that the bearing capacity of the piling will be determined by the Wave Equation Method, the Contractor shall submit to the Engineer the following data:

a. Manufacturer's specification data of the hammer proposed for use, including any and all modifications thereto and

b. Complete description and dimensions of all cushioning material used between the pile and helmet, and in the cap block, including total thickness of each, and the direction of grain if wood is used.

The above data will be used to determine the required number of blows per unit of penetration the hammer must deliver to obtain the required bearing resistance. This will be determined and furnished by the Bridge Division in the form of bearing graphs.

After evaluation by Wave Equation, any change in the driving equipment may require reevaluation, but in all cases such changes shall be approved by the Engineer prior to further driving.

A hammer which produces less energy than required by Table 1, may be approved if a wave equation analysis indicates the hammer can drive the specified pile against a bearing resistance of three times the required design load before reaching practical refusal. Practical refusal is defined as 1/16 of an inch penetration per blow. The bearing resistance of the piling driven with this particular equipment will be determined in accordance with the Wave Equation Method.

404.11. Length Determination. Piling lengths shall be determined by one of the following methods:

1. **Plan Lengths.** When none of the following methods of length determination are required by the plans, the lengths shall be in accordance with Article 404.7. herein.

2. **Test Piling.** When required by the plans, test piling shall be driven and the data used to determine approved lengths. The appropriate evaluation method (hammer formula or wave equation bearing graph) will be used to determine the bearing resistance.

3. **Test Pile Redrive.** When redriving of test piling is required by the plans, the test piling shall be driven to 3 feet above plan tip elevation of the regular piling.

On the seventh day after the original driving, the piling shall be redriven the additional length required by the plans with the same hammer and the same type and amount of all cushioning material as originally used. The blow count will be recorded for each inch of driving for the first foot and for every 3 inches for the next 2 feet. The remainder of the driving will be recorded as required for regular test piling.

The required evaluation method will be used to determine the initial and redrive bearing resistance of the test piling. These data will be used to determine pile lengths and to develop a redrive "K" factor to modify the appropriate evaluation method.

Subsequent to the redrive test piling, driving shall be to the approximate penetration as approved, or to greater depth as necessary to obtain the required bearing determined by the appropriate evaluation method modified by the redrive "K" factor, where:

$$K = \frac{P_R}{P}$$

K = a static correction factor applied to the evaluation method.

P_R = redrive bearing (tons) of the test pile determined by the appropriate evaluation method.

P = original bearing (tons) of test pile determined by the appropriate evaluation method.

4. **Test Load.** When required by the plans, designated piling shall be driven and test loaded. The appropriate evaluation method will be used to determine the bearing resistance of the test load pile and any anchor piling. The test load data will be used to determine pile lengths, and to develop a "K" factor to modify the method of bearing evaluation.

Subsequent to the test load, driving shall be to the approximate penetration, as approved, or to such greater depth as necessary to obtain the required bearing determined by the appropriate evaluation method modified by the test load "K" factor; where:

$$K = \frac{L}{P}$$

K = a static correction factor applied to the evaluation method.

L = maximum safe static load proven by test load.

P = bearing resistance of the test loaded pile determined by the appropriate evaluation method.

5. **Soil Tests.** When required by the plans, the piling designated thereon shall be driven to the tip elevations shown. The appropriate evaluation method will be used to determine the bearing resistance.

Subsequent to driving the designated piling, driving shall be to the approximate penetration as approved, or to such greater depth as necessary to obtain the required bearing determined by the appropriate evaluation method modified by the soil "K" factor, where:

$$K = \frac{R}{P}$$

K = a static correction factor applied to the evaluation method.

R = maximum safe static load predetermined by soil studies and designated on the plans.

P = average bearing resistance of the selected piling determined by appropriate evaluation method.

404.12. Measurement and Payment. No direct measurement or payment will be made for the work to be done or the equipment to be furnished under this item, but shall be considered subsidiary to the particular item of piling as required by the plans and the contract.

ITEM 405

FOUNDATION TEST LOAD

405.1. Description. This item shall govern for the materials, equipment and work required for test loading piling or drilled shafts.

405.2. General. The piling or shaft to be test loaded shall be specified on the plans. A complete record of the test pile data on the anchor and test piling or drilling data on the anchor and test shafts, shall be made under the supervision of the Engineer.

The test load shall be applied on the seventh day after driving the test piling or after placing concrete in the test shaft. (Concrete in the shaft must have reached design strength.)

Unless otherwise specified, the Department will furnish the jacking equipment, suitable jacking beams and extensometers.

The Contractor shall furnish and drive the piling or construct the shaft to be test loaded and such appropriate anchors that may be necessary, and shall furnish all necessary material, labor, work, tools, equipment in addition to that furnished by the State, shelter to protect the test load equipment from sun and rain, and incidentals necessary for the proper installation of the complete test load set-up. After the test has been completed, the test set-up shall be dismantled by the Contractor in a manner satisfactory to the Engineer.

Test piling or test shafts and any required anchors which are not a part of the permanent structure, shall be included as a part of the "Foundation Test Load".

405.3. Construction Methods. The test piling shall be of the same type and cross section as the piling to be used in the structure. When precast concrete piling are to be test loaded, prestressed concrete piling of the same size and section may be used.

Anchor shafts shall be constructed first so that a satisfactory procedure can be developed for drilling the test shaft. Generally the same procedure used for the test shaft shall be used for drilling the shafts required in the structure.

A permanent piling or shaft may be used as an anchor or for test loading when shown on the plans or when directed by the Engineer. Piling or shafts, not a part of the structure, shall be removed or cut off at least one foot below the bottom of the footing or finished elevation of the ground upon completion of the test load. Permanent piling used as anchor piling which are raised during the test load shall be redriven to original grade and bearing.

The driving of anchor and test piling shall be in accordance with the Item, "Driving Piling".

The construction of anchor and test shafts shall be in accordance with the Item, "Drilled Shaft Foundations", or the Item, "Slurry Displacement Drilled Shafts".

405.4. Method of Loading and Evaluation of Tests. Test loading shall consist of the application of incremental static loads to a pile or shaft and measuring the resultant settlement. The loads shall be applied by a hydraulic jack acting against suitable anchorage, transmitting the load directly to the pile or shaft, in accordance with details shown on the plans or as approved by the Engineer.

All test loads shall be carried to failure or to the capacity of the equipment, unless otherwise noted on the plans.

The loading procedure, recording of data and evaluation of load test data shall be in accordance with "Test Loading Piling", SDHPT Bulletin C-8, Pile Driving Manual or "Test Loading Drilled Shafts", SDHPT Bulletin C-9, Drilled Shaft Manual, whichever is pertinent.

405.5. Measurement. Measurement will be made for each complete test load, satisfactorily performed and accepted.

Anchor and test piling or anchor and test shafts, which are a part of the permanent structure, will be measured by the linear foot before cutting them to final plan grade.

Anchor and test piling or anchor and test shafts, which are not a part of the permanent structure, will not be measured for payment but will be included in the price bid for "Test Load".

If subsequent test loads are required on a previously loaded test piling or test shaft after the Engineer has directed the Contractor to dismantle the test equipment, any additional build up and driving of the test pile and/or reinstallation of the test equipment shall be considered as a separate test load.

405.6. Payment. The load tests provided under this item will be paid for at the unit price bid for each "Test Load", which price shall be considered full compensation for furnishing all material, labor, work, tools, equipment and incidentals necessary for the proper installation and completion of the test load. Anchor and test piling or anchor and test shafts, which are not a part of the permanent structure, will be included in the unit price bid for each "Test Load". Anchor and test piling or anchor and test shafts, which are a part of the permanent structure, will be paid for under the appropriate item.

If a subsequent test load is required, as described above under Article 405.5, such test will be paid for at the rate of one-half the price bid for each "Test Load".

ITEM 406

TIMBER PILING

406.1. Description. This item shall govern for the furnishing of treated or untreated timber piling, in place, in accordance with the size, type and details shown on the plans.

406.2. General. Driving of piling shall be in accordance with the Item, "Driving Piling". Test loading, when required, shall be in accordance with the Item, "Foundation Test Load".

Where test piling are not required, the approved lengths of the piling shall be those shown on the plans. Where test piling are required, the approved lengths shall be those determined by the Engineer from test pile data and shown in the approved schedule of piling.

The embankment at bridge ends shall be completed to grade and thoroughly compacted prior to driving piling therein, unless otherwise shown on the plans or directed by the Engineer.

406.3. Material. Unless otherwise required, timber piling shall meet the requirements of ASTM D-25.

Untreated piling may be of any species of durable timber which will satisfactorily stand driving. Treated piling shall consist of Southern Pine or Douglas Fir, impregnated with a preservative of such quantity and process as shown on the plans and/or as specifed in the Item, "Timber Preservative and Treatment".

The minimum circumference of round piling at a section 3 feet from the butt, measured under the bark, shall be as follows:

Length of Piling	Minimum Circumference 3 feet from Butt
40′ and under	38″
Over 40′	41″

All piling shall be subject to inspection by the Engineer or his authorized representative before and after treatment. The Engineer shall be allowed free access to all points from which materials are being produced or processed. The producer shall render whatever assistance is necessary for the proper inspection of materials. When unsuitable material is rejected,

the judgment of the Engineer shall be final. The butt and tip of each acceptable pile will be branded with a marking hammer showing the identity of the Engineer or inspection agency who performed the work.

Inspection at all points shall be made to insure compliance with these specifications. In the event any material is found which does not comply, the Engineer will require corrections or replacement of defective material.

406.4. Storing and Handling. At all points, suitable precautions shall be taken to prevent excessive splitting, checking, warping, distortion or any other damage which may cause the piling to be rejected. Treated timber piling shall be carefully handled without dropping, breaking of outer fibers, bruising or penetrating the surface with tools. The piling shall be handled with rope slings. Cant dogs, hooks or pike poles shall not be used where such tools will penetrate untreated wood.

406.5. Cut-Offs and Build-Ups. The tops of all piling shall be sawed to a true plane as shown on the plans and at the elevation established by the Engineer. Piling which support timber caps or grillage work shall be sawed to the exact plane of the superimposed structure and shall fit it exactly.

Piling which must be driven below established grade in order to attain the required bearing capacity shall be built up to the required grade by splicing on an additional length of piling of the same diameter and quality as the pile to be built up. Splices shall be made in accordance with the details shown on the plans after the pile head and the lower end of the build-up section have been squared up and treated in accordance with Article 406.6. The build-up shall be of such length as to preclude the use of more than one splice in any one pile, and no splices or build-ups will be permitted except under the conditions outlined herein.

406.6. Treatment of Cuts, etc. After the necessary cutting has been done, the heads of treated timber piling shall be given three coats of hot creosote oil and one coat of hot tar pitch. When indicated on the plans, the pile heads then shall be covered with a sheet of roofing felt weighing approximately 55 pounds per 100 square feet, or 20 gage galvanized metal. The cover shall measure at least 6 inches more in each dimension than the diameter of the piling and it shall be bent or folded down over the piling and edges fastened with large-headed galvanized nails or secured by binding with galvanized wire as indicated on the plans.

The heads of untreated timber piling, unless otherwise provided, shall be coated thoroughly with a thick protective coat of hot tar, hot asphaltum, or hot tar creosote and, when indicated on the plans, covered with felt or galvanized metal as provided above.

All places where the surface of treated piling is broken by cutting, boring, or otherwise, shall be coated thoroughly with hot creosote oil and then with a coating of hot tar pitch. Hot creosote oil shall be injected under pressure into the bolt holes, before the insertion of the bolts, in such a manner that the entire surface of the holes shall receive a coating of the oil.

Creosote oil used for treatment of cuts, bolt holes, etc., shall conform to the requirements of the Item, "Timber Preservative and Treatment".

406.7. Test Piling. When test piling are required, the lengths of piling shown on the plans are approximate and shall be used for estimating purposes only. When required on the plans, test piling shall be driven to determine pile lengths for each structure. Test piling shall meet the requirements herein specified for untreated timber piling or treated timber piling as the case may be. The test piling shall be of the lengths shown on the plans. The locations for driving and disposal of test piling above the ground line will be as directed by the Engineer. The number of test piling shown on the plans may be increased or decreased as deemed necessary to secure the desired information.

Test piling shall be driven with the same type and size of equipment proposed to be used to drive the piling in the structure.

When test piling are specified, no piling for the proposed structure shall be ordered until the test pile data has been evaluated and approved lengths have been determined by the Engineer.

406.8. Measurement. Timber piling, treated or untreated, driven in accordance with the specifications will be measured by the linear foot of acceptable piling complete in place after all cut-offs and build-ups have been made.

No cut-off will be measured on any pile which is spliced and built-up.

Anchor piling and piling to be test loaded shall be measured as provided in the Item, "Foundation Test Load". Measurement of all other test piling will be made by the linear foot of acceptable test pile in place after all cut-offs and build-ups have been made.

Each authorized build-up splice on both regular and test piling, other than those made necessary by careless or improper handling or driving, shall be measured as "One Build-up".

Cut-offs for both regular and test piling will be measured by the linear foot of cut-off above grade. The portions of test loaded piling which are cut off after making the tests will not be measured as cut-offs since payment is provided for them in the Item, "Foundation Test Load". The pay length of cut-off for each pile will be determined by deducting the length of accepted pile in place, after cut-off has been made, from the approved length of pile.

except that no measurement will be made of cut-offs necessitated by brooming, splitting or other damage resulting from improper driving.

406.9. **Payment.** Timber piling measured as provided above will be paid for at the unit price bid per linear foot for "Treated Timber Piling" or "Untreated Timber Piling", as the case may be.

Test piling measured as provided above will be paid for at the unit price bid per linear foot for "Untreated Timber Test Piling" or "Treated Timber Test Piling", as the case may be.

Each completed authorized build-up splice for both regular and test piling, measured as provided above will be paid for at four times the unit price bid for "Treated Timber Piling" or "Untreated Timber Piling", as the case may be. This shall not include any allowance for the length of piling used in the build-ups as this is measured and paid for as timber piling as provided elsewhere in this specification.

Cut-offs for both regular and test piling measured as provided above will be paid for by the linear foot at one-half the unit price bid for "Treated Timber Piling" or "Untreated Timber Piling", as the case may be.

The foregoing shall be full compensation for furnishing all materials, tools, labor, equipment, jetting, pilot holes, alignment holes, and incidentals necessary to complete the work, except that any loading test ordered by the Engineer that is not provided for in the contract shall be paid for in accordance with Article 9.4, and no additional compensation will be allowed the Contractor because of any delay in any work resulting directly or indirectly from this extra work.

ITEM 407

STEEL PILING

407.1. **Description.** This item shall govern for the furnishing of steel piling of H-section and sheet piling, in place, of the type and weight, and in the locations shown on the plans.

Driving of piling shall be in accordance with the Item, "Driving Piling". Test loading, when required, shall be in accordance with the Item, "Foundation Test Load".

The length of piling to be furnished shall be as indicated on the plans or authorized by the Engineer. Where test piling are required, lengths shall be determined by the Engineer from either regular test pile data, redrive test pile data, soil test data or pile test load data, whichever is pertinent.

The embankment at bridge ends shall be in place, thoroughly compacted, and to grade prior to driving piling therein unless otherwise shown on the plans or directed by the Engineer.

Reinforcement of steel H-pile tips in accordance with the following detail shall be furnished and measured in accordance with the following:

1. When the contract plans show the piling driven into rock, shale or other material of similar hardness, the Contractor shall furnish piling with reinforced tips without measurement for payment.

2. When the contract plans show the piling founded in materials other than those mentioned above, any tip reinforcement ordered by the Engineer in writing will be measured for payment as provided in Article 407.8.

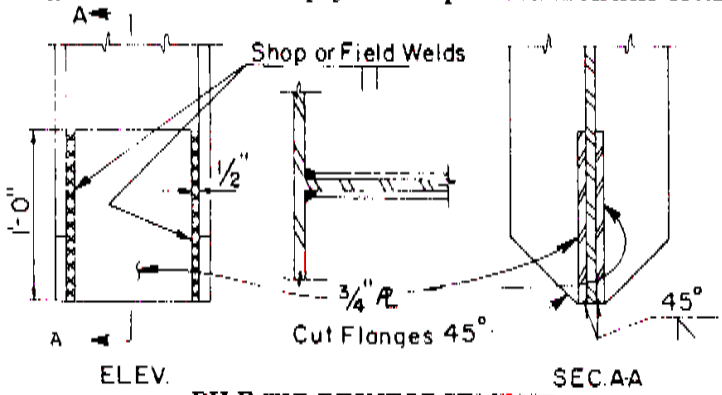

PILE TIP REINFORCEMENT

407.2. Material. Steel H-piling and steel sheet piling shall be furnished in accordance with the Item, "Steel Structures", and the Item, "Metal for Structures". Steel sheet piling with a section modulus and minimum thickness of material equal to or greater than that of the section specified may be substituted therefor.

407.3. Storing and Handling. Sufficient blocking shall be used to prevent deflection of the piling and to prevent contact with the ground. When stored, they shall be kept clean and fully drained at all times. The methods of handling shall prevent damage to the piling.

407.4. Cut-Offs, Splices and Build-Ups. All splices for steel H-piling shall be made in accordance with the details shown herein. If the required penetration or bearing resistance has not been obtained, spliced piling may be driven the additional depth required as soon as the splice is completed.

The Contractor may, at his expense, fabricate piling by welding together not more than three sections of piling, provided the distance between welds is not less than five feet.

Build-ups shall be governed by the provisions of Articles 407.8 and 407.9.

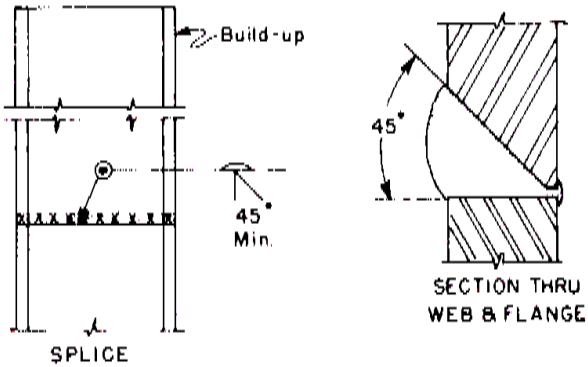

STEEL PILING SPLICE DETAIL

After the pile has been driven to the approximate penetration and to the bearing resistance required, it shall be cut off square at plan grade, or to the grade established by the Engineer. Where special pile caps are specified, the end surfaces of the pile shall be made as smooth as practicable before the head is welded in place. The pile cap shall confrom to the plan details.

If the head of the pile is appreciably distorted or otherwise damaged below cut-off level, the damaged portion shall be cut off and an undamaged section shall be spliced in its place at the Contractor's expense.

Sheet pile splices shall be prepared similar to the details shown for H-piling with care taken not to interfere with the interlocks.

Welding shall be in accordance with the Item, "Structural Welding".

407.5. Concrete Collars. When required by the plans, piling which extend above the permanent ground line shall be provided with concrete collars at the ground line. The concrete shall be Class "C" conforming with the Item, "Concrete for Structures", and the Item, "Concrete Structures".

The surface of the piling to be covered by the concrete collar shall be thoroughly cleaned of loose mill scale, rust, dirt, grease and all other foreign substances before placing concrete.

The portion of the concrete collar above the ground line shall be formed in a manner to provide a smooth, uniform appearance. Where the material on the sides of the hole is sufficiently stable to stand without caving during the concrete placing operation, the forms may be omitted from the portion of the collar below the permanent ground line, otherwise they shall extend to the bottom of the collar. Concrete collars shall be cured for a minimum of four curing days.

407.6. Painting. Steel piling shall not be painted before driving. After driving, capping and placing collars, all exposed portions of the piling shall

be cleaned and painted in accordance with the Item, "Cleaning, Paint and Painting". Unless otherwise specified, the paint shall consist of Protection System I, Aluminum. Painting shall extend to a point one foot below finished ground line, unless the pile is standing in water, in which case, painting shall extend to low water line. Earth removed for this painting shall be replaced after paint has dried.

407.7. **Driving Sheet Piling.** Sheet piling will be driven in the location and to the elevation shown on the plans or as designated by the Engineer.

The driving equipment shall have the capability required to drive the piling to the required depths without damage. The equipment shall include a helmet compatible with the shape of the sheet pile.

407.8. **Measurement.** Steel H-piling will be measured by the linear foot of acceptable piling in place after all cut-offs and build-ups have been made. A splice made necessary by driving beyond the authorized pile length to obtain the required bearing will be measured as "One Splice". Each additional splice required for build-up will be measured as "One Splice", provided the distance between splice points is not less than 10 feet. Cut-offs will not be measured for payment.

Where a reinforced tip is ordered by the Engineer in accordance with Subarticle 407.1.2., it will be measured as "One Pile Tip".

For piling specified to be driven to a "minimum penetration", no measurement will be made on that portion driven below the elevation at which the penetration and bearing requirements were first obtained.

The full length of test piling driven will be measured for payment.

Steel sheet piling shall be measured by the square foot of acceptable piling in place. Sheet piling driven below the elevation required by the plans or as directed by the Engineer will not be measured for payment. No measurement will be made for cut-offs or splices.

407.9. **Payment.**Steel H-piling will be paid for at the unit price bid per linear foot for "Steel H-Piling", or "Steel H-Test Piling", as the case may be, of the specified size and weight.

Steel sheet piling will be paid for at the unit price bid per square foot for "Sheet Piling" of the type shown on the plans.

No direct payment will be made for cut-offs, pile caps, concrete collars, painting, or for excavation and backfill required by the placing of collars or the painting of portions of piling below ground line. Payment for all work and materials required by these items shall be included in the unit price bid per linear foot for "Steel H-Piling", "Steel H-Test Piling", or in the unit price bid per square foot for "Sheet Piling", as the case may be.

Test piling, when shown on the plans, will be paid for at the unit price bid per linear foot for "Steel H-Test Piling" of the specified size and weight. When test piling are driven at the option of the Contractor, they shall be paid for at the unit price bid per linear foot for "Steel H-Piling", if so located as to form a portion of the completed structure as shown on plans and if structurally acceptable and driven to required penetration and bearing.

Payment for the work and materials (exclusive of additional length of piling) required in making each authorized splice will be made at a price equal to three times the unit price bid per linear foot for "Steel H-Piling" of the size and weight on which the splice is made.

Payment for the work and materials required for each reinforced tip ordered by the Engineer will be made at a price equal to two times the unit price bid per linear foot for "Steel H-Piling" of the size and weight on which the tip is added.

No payment will be made for cut-off or splices of sheet piling.

The foregoing shall be full compensation for furnishing all materials, tools, labor, equipment, jetting, pilot holes, alignment holes and incidentals necessary to complete the work, except that any load test ordered by the Engineer that is not provided for in the contract shall be paid for in accordance with Article 9.4. No additional compensation will be allowed the Contractor because of any delay in any work resulting directly or indirectly from this extra work.

ITEM 408

METAL SHELL PILING

408.1. **Description.** This item shall govern for the furnishing of metal shell piling in place, fabricated, reinforced, and filled with concrete in accordance with these specifications and plans, of the type and size shown on the plans, and in the locations as required by the plans.

Driving of piling shall be in accordance with the Item, "Driving Piling". Test loading, when required, shall be in accordance with the Item, "Foundation Test Load".

The length of piling to be furnished shall be as indicated on the plans or authorized by the Engineer. When test piling are required, lengths shall be determined by the Engineer from either regular test pile data, redrive test pile data, soil test data or pile test load data, whichever is pertinent.

The embankment at bridge ends shall be in place, thoroughly compacted, and to grade prior to driving end bent piling unless otherwise shown on the plans or directed by the Engineer.

408.2. Material. Metal in the shell shall conform to the Item, "Metal for Structures". All concrete shall be in accordance with the Item, "Concrete Structures", and the Item, "Concrete for Structures", except that the use of a tremie will not be required. Concrete shall be Class "A" unless otherwise shown on the plans. Reinforcement shall conform to the requirements of the Item, "Reinforcing Steel". The sizes and dimensions of reinforcing steel shall be as shown on the plans. Welding shall be done in accordance with the Item, "Structural Welding". The required sizes and dimensions of the metal shell piling shall be as shown on the plans.

Metal shell piling may be of any of the sections and of the minimum thickness or gage indicated on the plans. The entire metal shell shall form an integral water-tight unit. The shoe or point shall be tightly fastened to the shell and adequately welded or otherwise connected to prevent the entrance of water. The shell shall be of sufficient strength to resist the earth pressure after being driven and shall retain its original form free from harmful distortions after it and adjacent piling in the bent or pier have been driven.

408.3. Storing and Handling. Piling to be stored shall be placed on blocking to prevent contact with the ground. The stored piling shall be kept clean and fully drained at all times. A sufficient amount of blocking shall be used to prevent deflection in the stored piling. The methods of handling shall not result in damage to the piling.

408.4. Cut-Offs, Splices, and Build-ups. After the metal shell has been driven to the approximate penetration and bearing resistance to satisfy the design requirement, it shall be cut off or built up as necessary to bring the top of the shell to plan grade. Cut-offs shall be made with a cutting torch or other acceptable method which will provide a smooth, square end. Splices shall be made by welding to fully develop the section of the shell and produce a smooth, water-tight joint.

Where the top of the pile is appreciably deformed or otherwise damaged below cut-off level, the damaged portion shall be cut off and replaced with a new section spliced in place. No additional compensation will be allowed for this work and material.

408.5. Test Piling. Where required, test piling shall be furnished and driven at locations as shown on the plans or as directed by the Engineer, and shall conform to the requirements herein provided for metal shell piling. In general, test piling shall be made a part of the completed work and shall be cut off or built up to grade elevations as necessary. The Contractor will be given the option of driving test piling for his own information in estimating the length of piling, even though they are not required or indicated on the plans.

Load tests will be required when called for on the plans or special provisions. When required bearing resistance, as computed by the proper formula, cannot be attained at or near the depth of penetration indicated on plans, the Engineer may require load tests on one or more piling as necessary to establish the actual bearing capacities of the piling and to develop a modified bearing resistance formula.

408.6. **Construction Methods.** The length of a metal shell pile may be built up in sections either before or during the driving operation. The minimum length of a section measured between splices shall be 5 feet and only one splice will be permitted in that portion of pile exposed above ground line or normal water line.

Care shall be taken to properly align the sections to be spliced to insure a straight axis. The sections shall be welded together in a manner that will fully develop the section of the shell and also form a water-tight joint.

After all driving and splicing is completed, the shell shall be free of buckles, water, and other foreign matter and shall be of required shape and dimensions before filling with concrete. The Contractor shall provide equipment and facilities necessary for the proper inspection of the shells. Any damaged, improperly driven, or otherwise defective shell shall be evaluated by the Engineer and if necessary shall be removed and replaced at the Contractor's expense.

Piling shall have reinforcing steel placed as indicated on the plans. Care shall be taken to hold the reinforcement to true position in the shell when placing concrete. Concrete blocks or other suitable devices shall be used to prevent the displacement of the reinforcing steel.

The concrete shall be placed in a continuous operation. Care shall be taken to prevent segregation in depositing concrete, and special devices shall be used if necessary. No concrete shall be placed in the piling in any bent or footing until all driving of piling in that bent or footing has been completed. The tops of shells shall be kept covered after driving until the concrete has been placed.

408.7. **Painting.** All surfaces of metal shells which will be exposed to view in the completed structure shall be cleaned and painted in accordance with the Item, "Cleaning, Paint and Painting" and in compliance with the following additional requirements. Unless otherwise specified, the paint shall consist of Protection System I, Aluminum.

Piling shall not be painted until after concrete has been placed therein. Painting shall extend to a point one foot below the finished ground line unless the pile is standing in water, in which case, the paint shall extend to low water line. Earth removed for this painting shall be replaced after the paint has dried.

408.8. Measurement. Measurement will be made by the linear foot of acceptable piling in place after all cut-offs and build-ups have been made except that where piling, other than required test piling, are driven to depths greater than required to meet the specified penetration and bearing requirements, no measurement will be made on that portion of piling below the elevation at which penetration and bearing requirements were first obtained. The full authorized length of test piling driven will be measured for payment.

408.9. Payment. Metal shell piling will be paid for at the unit price bid per linear foot for the specified size of "Metal Shell Piling", or "Metal Shell Test Piling", as the case may be.

No direct payment will be made for cut-offs or splices, for cleaning and painting metal shells, or for the excavation and backfill required in the painting of piling below ground line.

Test piling, when shown on the plans, will be paid for at the unit price bid per linear foot for "Metal Shell Test Piling". When test piling are driven at the option of the Contractor, they shall be paid for at the unit price bid per linear foot for "Metal Shell Piling" if so located as to form a portion of the completed structure as shown on the plans and if structurally acceptable and driven to required penetration and bearing.

The foregoing shall be full compensation for furnishing all materials, tools, labor, equipment, jetting, pilot holes, alignment holes, and incidentals necessary to complete the work, except that any test load ordered by the Engineer that is not provided for in the contract shall be paid for in accordance with Article 9.4. No additional compensation will be allowed the Contractor because of any delay in any work resulting directly or indirectly from this extra work.

ITEM 409

CONCRETE PILING

409.1. Description. This item shall govern for the furnishing of concrete piling in place, of the size and in the locations shown on the plans.

409.2. General. Driving of piling shall be in accordance with the Item, "Driving Piling". Test loading, when required, shall be in accordance with the Item, "Foundation Test Load".

The length of piling to be furnished shall be as indicated on the plans or authorized by the Engineer. When test piling are required, lengths shall be determined by the Engineer from either regular test pile data, redrive test pile data, soil test data or pile test load data, whichever is pertinent.

The embankment at bridge ends, shall be to grade and compacted prior to driving piling therein unless otherwise shown on the plans or permitted by the Engineer.

Precast or prestressed piling (whether pre- or post-tensioned), shall be fabricated on properly designed and constructed casting beds. After casting, each pile shall be marked with an identifying number and the date of casting.

409.3. Designation and Selection of Piling. Unless otherwise noted on the plans, the Contractor has the choice of furnishing precast piling or prestressed piling. For this item, precast piling shall be defined as regularly reinforced (non-prestressed) piling. In either case, the piling shall be of the shape, size, section and reinforced and/or prestressed in accordance with the plan requirements and the pertinent specifications.

409.4. Materials. Reinforcing steel shall be in accordance with the Item, "Reinforcing Steel".

For precast piling, concrete shall be Class "C" with entrained air unless otherwise shown on the plans. Concrete and concrete materials shall be in accordance with the Item, "Concrete Structures", and the Item, "Concrete for Structures".

For prestressed piling, concrete shall be of the class shown on the plans. Concrete and concrete materials shall be as specified in the Item, "Prestressed Concrete Structures". Stressing materials and prestressing shall be in accordance with the Item, "Prestressing".

409.5. Construction Methods.

(1) Prestressed Piling. Prestressed piling fabrication shall be governed by the pertinent requirements of the Item, "Prestressed Concrete Structures", and the Item, "Prestressing".

(2) Precast Piling. The following shall govern for precast piling in addition to the applicable requirements of the Item, "Concrete Structures".

(a) Forms. Foundations for forms shall adequately support the weight of the concrete without settlement or sagging of the forms.

Form work shall conform to the requirements of the Item, "Concrete Structures", except that corners may be filleted or rounded.

All corners of square piling shall have a chamfer or radius unless otherwise provided.

Piling may be turned over for removal of a single unit steel form after the concrete flexural strength reaches 400 psi minimum as evidenced by test beams made and cured under the same conditions as the piling. Curing shall be resumed upon removal of the forms.

Side forms may be removed at the discretion of the Contractor any time after the concrete has reached sufficient strength to prevent physical damage to the surface, provided curing is not interrupted for more than 30 minutes and the pile is not moved on its supports until the minimum curing period has elapsed.

(b) **Reinforcement.** Reinforcement shall be accurately placed and rigidly supported as required by the Item, "Reinforcing Steel".

(c) **Placing Concrete.** Concrete shall be placed continuously in each pile. Special care shall be taken to avoid cold joints. Approved types of mechanical vibrators shall be used to thoroughly consolidate the concrete without displacing the reinforcing steel.

Due to the close spacing of reinforcement in the pile tip, special care shall be taken to avoid accumulations of large sizes of aggregates in this area. Large particles shall be moved as required to insure complete filling of the space between bars and to avoid honeycomb in the interior of the pile.

(d) **Curing.** As soon as a pile is completed and the top surface finished as required, it shall be covered with wet cotton mats which shall remain in place until the side forms are removed. After form removal, the entire pile or bed of piling, including the ends, shall be covered with wet cotton mats, wet earth, or submerged by ponding for a total of 6 curing days, and until the concrete has a minimum flexural strength of 600 psi or a minimum compressive strength of 3600 psi. The beams or cylinders shall be cured in the casting bed under the same conditions as the piling.

(e) **Finishing.** The top surface of all piling shall be struck off and finished with a wood float bringing grout to the surface to cover the aggregate and present a reasonably smooth appearance. Form marks, small corner fins and discolorations need not be removed, unless the piling is to be exposed to view.

(3) **Driving Piling.** The minimum age at which piling may be driven shall be in accordance with the Item, "Driving Piling".

409.6. Handling and Storing. The method of handling and storing piling shall minimize the danger of fracture by impact or undue bending stresses. Any broken or cracked piling shall be cause for immediate review and correction of the conditions causing the failure. The use of chain slings will not be permitted. After the curing and strength requirements are met, the piling may be removed to a storage area where they shall be stored above ground on adequate blocking that will prevent undue stresses.

409.7. Workmanship and Tolerances. The maximum sweep (curvature along the axis of the pile) shall not exceed one-eighth of an inch per 10 feet of length.

The head of the pile shall not be out of square by more than one-eighth of an inch.

Small, damaged or honeycombed areas which are purely surface in nature (not over one inch deep) may be repaired. Damage or honeycomb in excess of this will be tentatively rejected, but will be subject to structural review.

When piling are cast with internal voids, the position of the void shall be within plus or minus one-half inch.

409.8. **Defects and Breakage.** Piling cracked in the process of fabrication, handling, hauling or driving will be subject to the following provisions:

(1) Piling which have one or more cracks transverse to the main reinforcement or strand, which are one-sixteenth of an inch or greater in width, shall be rejected if the crack(s) occurs in a portion which will be below ground or water level after driving. If the crack(s) herein described will be located above ground or water level when driving is completed, the piling may be used provided it is cut back to the crack and rebuilt to grade. No additional payment will be made for this build-up.

(2) Piling which have one or more cracks as described above, that are less than one-sixteenth of an inch in width, may be used if the crack(s) is sealed with a Type VII epoxy, meeting the requirements of the Item, "Epoxy".

The cracks shall be grooved a minimum of one-quarter of an inch in width and depth and the epoxy shall be applied in the groove and extend over an area not less than one inch on each side of the crack. The area to which the epoxy is to be applied shall be clean and dry. If, during driving, cracks develop in the portion which will be below ground, driving operations shall be stopped and the required epoxy material applied before driving continues.

(3) Piling with one or more cracks parallel or diagonal to the main reinforcing steel or strand which extend to the plane of reinforcement as determined by the Engineer, will be cause for rejection. If these piling are found to be acceptable, proper repair shall be made, in accordance with the above requirements.

(4) Fine hair cracks or surface checks, which do not extend to the plane of the nearest reinforcing steel, as determined by the Engineer, will not generally require repair and will not be cause for rejection.

(5) Any tendon breakage will be analyzed in accordance with the Item, "Prestressing".

(6) Replacements or repairs specified herein, and other replacements due to faulty materials or construction methods, will not be paid for.

409.9. Cut-offs or Build-ups. Build-ups shall be made in accordance with the details shown on the plans.

Welding of reinforcing steel shall conform to the Item, "Structural Welding".

The pile ends shall be cut back, leaving the steel exposed. The final cut of the concrete shall be normal to the longitudinal axis and any damage shall be remedied by further cut back. The build-up form shall be placed, care being taken to prevent leakage along the pile. The build-up shall be Class "C" concrete. Just prior to placing the concrete, the top of the pile shall be wetted thoroughly and covered with a thin coating of cement grout.

If no further driving is required, form removal and concrete curing shall conform to requirements for concrete columns in the Item, "Concrete Structures".

Where additional driving is required, the build-up portion shall be water cured 6 curing days, and until the concrete has a minimum flexural strength of 600 psi or a minimum compressive strength of 3600 psi.

409.10. Test Piling. When required, test piling shall be furnished and driven at locations as shown on the plans, or as directed by the Engineer, and shall conform to the requirements herein. In general, they shall be made a part of the completed work and shall be cut off or built up to grade as necessary. The Contractor shall be given the option of driving test piling for his own information in estimating the length of piling, even though they are not required or indicated on the plans.

Test loading shall be as required by the plans. When the required bearing, as computed by the pertinent formula, cannot be attained at or near the penetration indicated on the plans, the Engineer may require load tests.

409.11. Measurement. Piling will be measured by the linear foot of acceptable piling in place after all cut-offs and build-ups have been made. Each authorized build-up made, other than those made necessary by improper casting or handling or driving, shall be measured as "One Build-up".

Anchor piling and piling which have been test loaded will be measured as provided in the Item, "Foundation Test Load". Measurement of all test piling not test loaded, will be made by the linear foot of acceptable piling in place after all cut-offs and build-ups have been made. Each authorized build-up, other than those made necesary by improper casting, handling or driving, shall be measured as "One Build-up".

Cut-offs for both regular and test piling will be measured by the linear foot of cut-off above grade. The portions of test loaded piling which are cut

off after making the tests will not be measured as cut-offs, since payment is provided for them in the Item, "Foundation Test Load".

When piling, other than required test piling, are driven deeper than required to meet the specified penetration and bearing requirements, no measurement will be made on that portion below the elevation at which penetration and bearing requirements were first obtained. Portions of test piling, directed by the Engineer to be driven below the level at which penetration and bearing were first obtained, will be measured for payment.

409.12. **Payment.** Piling will be paid for at the unit price bid per linear foot for the specified size of "Concrete Piling", or "Concrete Test Piling", as the case may be, measured as outlined above. When test piling are driven at the option of the Contractor, payment will be made at the unit price bid per linear foot for "Concrete Piling", if so located as to form a portion of the completed structure as shown on the plans, structurally acceptable and driven to the required penetration and bearing.

Each authorized build-up, measured as outlined above, shall be paid for at four times the unit price bid per linear foot for "Concrete Piling".

Anchor piling and piling to be test loaded shall be paid for as provided in the Item, "Foundation Test Load".

Cut-offs for both regular piling and test piling will be paid for at one-half the unit price bid per linear foot for "Concrete Piling". Where cut-backs are made below grade for the purpose of making build-ups, payment will be included in the allowance for built-ups.

A partial allowance will be made for materials and for piling (cast, but not driven) in accordance with the provisions of Article 9.6.

The foregoing shall be full compensation for furnishing all materials, tools, labor, equipment, jetting, pilot holes, alignment holes and incidentals necessary to complete the work, except that any loading test ordered by the Engineer that is not provided for in the contract shall be paid for in accordance with Article 9.4, and no additional compensation will be allowed the Contractor because of any delay in any work resulting directly or indirectly from this extra work.

ITEM 416

DRILLED SHAFT FOUNDATIONS

416.1. **Description.** This item shall govern for the construction of foundations consisting of "reinforced concrete drilled shafts" and/or "non-reinforced concrete drilled shafts", with or without bell footings. Drilled

shafts shall be constructed in accordance with this specification and in conformance with the details and dimensions shown on the plans.

Any required test loading of shafts shall be in accordance with the Item, "Foundation Test Load".

416.2. **Materials.** All concrete and materials shall be in accordance with the requirements of the Item, "Concrete for Structures", and the requirements herein. Concrete shall be Class "A", unless otherwise shown on the plans. The maximum size coarse aggregate shall be 1½ inches for cased shafts. A retarder or water reducing agent will be required in all concrete when casing is used or when shafts are placed underwater. Entrained air will be required in shaft concrete when placed in water. Reinforcing steel shall conform to the requirements of the Item, "Reinforcing Steel". The sizes and dimensions shall be as shown on the plans. Welding shall be in accordance with the Item, "Structural Welding".

416.3. **Construction Methods.**

(1) **Excavation.** The plans indicate the expected depths and elevations where satisfactory bearing material will be encountered.

The Contractor shall perform the excavation required for the shafts and bell footings, through whatever materials encountered, to the dimensions and elevations shown on the plans or required by the site conditions. If satisfactory material is not encountered at plan elevation, the bottom of the shaft will be adjusted, or the foundation altered, as determined by the Engineer, to satisfactorily comply with design requirements.

Shaft alignment shall be within a tolerance of one inch per ten feet of depth.

Where caving conditions and/or excessive ground water is encountered, no further drilling will be allowed until a construction method is employed which will prevent excessive caving that will cause the excavation to be appreciably larger than the size of casing to be used. Drilling in a mud slurry, as necessary to control ground water and caving until a casing is set, will be permitted.

Casing will be required when necessary to prevent caving of the material or when necessary to exclude ground water. Casing shall be metal of ample strength to withstand handling stresses, the pressure of concrete and of the surrounding earth or backfill materials, and shall be watertight.

When casing is required, the outside diameter of the casing shall not be less than the specified diameter of shaft. That portion of the shaft below the casing may be slightly smaller than the nominal diameter of the shaft, i.e., shall be the largest size possible when drilled through a casing with the out-

side diameter as specified herein; otherwise the size of casing and size of drilled excavation will be left to the discretion of the Contractor except as noted below.

If the elevation of the top of shaft is below ground level at the time of concrete placement, an oversize surface casing from ground elevation to a point below the top of the shaft may be required to control caving of any material into the freshly placed concrete.

When casing is used, it shall be smooth, clean, and free of accumulations of hardened concrete.

Under normal operations, the removal of the casing shall not be started, until all concrete placement is completed in the shaft. Movement of the casing for short pulls of a few inches, rotating, exerting downward pressure and tapping it to facilitate extraction will be permitted. When unusual conditions warrant, the casing may be pulled in partial stages. A sufficient head of concrete shall be maintained at all times above the bottom of the casing to overcome hydrostatic pressure. Casing extraction shall be at a slow, uniform rate with the pull in line with the vertical axis of the shaft.

When the plans indicate that skin friction design has been used, any casing used will not be permitted to remain in place unless otherwise noted on the plans or permitted by the Engineer.

Bells shall be excavated to form a bearing area of the size and shape shown on the plans. Bell shapes varying slightly from those shown on the plans are permissible provided the bearing area equals that specified.

Bells may be excavated either by hand or by mechanical methods. Blasting may be used only with permission of the Engineer and shall be controlled to avoid disturbance of the formations below or outside the limits of the proposed shaft.

Material excavated from shafts and bells, including drilling mud, and not used in the backfill around the completed bents or piers shall be disposed of as directed by the Engineer.

At the time concrete is placed, the excavation shall be free from accumulated seep water. All loose material shall be removed from the bottom of the excavation prior to placing concrete.

The Contractor shall provide suitable access and lighting for proper inspection of the completed excavation, and to check the dimensions and alignment of shafts and underreamed excavation.

Any required lighting shall be electric. Any mechanical equipment used within the excavation shall be operated by air or electricity. The use of gasoline driven engines within the excavation for pumping or drilling will not be permitted.

In order that the Engineer may judge the adequacy of a proposed foundation, the Contractor, if requested, shall make soundings or take cores at his expense to determine the character of the supporting materials. The minimum depth of such soundings or cores shall be 5 feet below the proposed founding grade, or a depth equal to the diameter of the shaft, whichever is greater. It is the intent of this provision that soundings shall be made or cores taken at the time the excavation is approximately complete.

When the plans require shafts in abutment bents, the embankment at the bridge ends shall be completed to grade and thoroughly compacted prior to drilling, unless otherwise shown on the plans or as permitted by the Engineer.

(2) **Reinforcing Steel.** The cage of reinforcing steel, consisting of longitudinal bars and spiral reinforcement, lateral ties or horizontal bands shall be completely assembled and placed as a unit immediately prior to concrete placement, unless otherwise specified.

If the shaft is lengthened, and the plans require full depth reinforcement, a minimum of one-half of the longitudinal bars required in the upper portion of the shaft shall be extended to the bottom, with proper lateral reinforcement. These bars may be lap spliced, spliced by welding, or unspliced bars of the proper length. Any splices required shall be in the lower portion of the shaft.

Where spiral reinforcement is used, it shall be tied or tack welded to the longitudinal bars at a spacing not to exceed 12 inches. Unless otherwise shown, welding will not be permitted within the top 15 feet of the steel cage.

Horizontal steel bands when used shall be placed and welded as shown on the plans.

The cage shall be supported and/or held down by some positive method to minimize vertical displacement during concrete placement and/or extraction of the casing. The support shall be concentric with the cage to prevent racking and distortion of the steel. An adequate number of the vertical bars shall be supported.

In uncased shafts, concrete spacer blocks, or steel chairs shall be used at sufficient intervals to insure concentric spacing for the entire length of the cage. In cased shafts, concrete spacer blocks may not be used. Metal "chair" type spacers or bent pieces of steel bars shall be placed at sufficient intervals around the steel cage to insure concentric spacing inside the casing.

The elevation of the top of the steel cage shall be carefully checked before and after casing extraction. Generally, any upward movement of the steel not exceeding 2 inches, or any downward movement not exceeding 6

inches per 20 feet of shaft length will be acceptable. Displacement of the steel beyond the above limits will be cause for rejection.

The minimum length of steel required for lap with column steel shall be maintained. Dowel bars may be used if the proper lap length is provided both into the shaft and into the column.

(3) **Concrete.** The work shall be performed in accordance with the provisions of the Item, "Concrete Structures", and with the requirements herein.

Concrete shall be placed as soon as possible after all excavation is complete and reinforcing steel placed, and shall be of such workability that vibrating or rodding will not be required.

Concrete placing shall be continuous in the shaft to the construction joint indicated on the plans.

Concrete shall be placed through a suitable tube or tremie to prevent segregation of materials. The tube or tremie may be made in sections to provide proper discharge and permit raising it as the placement progresses. A non-jointed pipe may be used if sufficient openings of the proper size are provided to allow for the flow of concrete into the shaft.

The elapsed time from the beginning of concrete placement in the cased portion of the shaft, until extraction of the casing is begun, shall not exceed one hour.

Placing of drilled shaft concrete under water may not be done without the permission of the Engineer. If permission is granted, the concrete shall be placed in accordance with the Item, "Concrete Structures", and shall be placed with a closed tremie or may be pumped. Provisions shall be made for a sump, or other approved methods, to channel displaced water away from the shaft. All shaft concrete placed underwater shall contain an additional sack of cement per cubic yard.

A riser block of equal diameter as the column and of a maximum height of 6 inches may be cast at the top of the completed shaft.

The top surface shall be cured and any construction joint area shall be treated as prescribed in the Item, "Concrete Structures".

No extra compensation will be allowed for the additional concrete required to fill an oversize casing or oversize excavation.

416.4. Test Holes. When shown on the plans, or when ordered by the Engineer in writing, test holes will be required to establish elevations for "belling", to determine elevation of ground water, or other soil properties.

The diameter and depth of test hole or holes shall be as shown on the plans or as directed by the Engineer.

416.5. Test Bells. When shown on the plans, or when ordered by the Engineer in writing, the reaming of bells on specified test holes will be required to establish the feasibility of belling in a specific soil strata.

The diameter and shape of the test bell shall be as shown on the plans or as approved by the Engineer in writing.

416.6. Measurement. Acceptable drilled shafts (of the specified diameter), complete in place, will be measured by the linear foot. Shafts for interior bents and piers will be measured from a point approximately six inches below the ground elevation at the center of shaft unless specific elevations or dimensions are indicated on the plans or unless the Engineer directs otherwise to meet unusual conditions. (The bent height shown on the plans is for estimating purposes only and does not control the top of shaft measurement.) For highway-highway grade separations and railroad underpasses, the ground elevation used will be the completed subgrade section under the structure. At stream crossings and at railroad overpasses, the existing ground elevation at the time drilling begins will be used. For abutment bents and retaining walls, the length of shaft shall be measured from the bottom of footing or cap elevation. For sign structures and illumination towers, the elevation of top of shaft will be shown as an elevation above ground, or as a dimension to the bottom of a footing.

Drilled shafts used with commercial designs of overhead sign bridges will not be measured for payment but will be considered as subsidiary to the overhead sign support.

The quantity of concrete for acceptable bell footings placed will be measured by the cubic yard, computed by using the dimensions and shape specified on the plans or as revised in diameter by the Engineer. The bell shall consist of the volume outside the plan or authorized dimensions of the shaft, which will extend to the bottom of the bell for the purpose of measurement.

Test holes of the specified diameter will be measured from the elevation of the ground at the time drilling begins, by the linear foot of acceptable test hole drilled.

Test bells will be measured by the cubic yard of material excavated, computed from the dimensions shown on the plans or those authorized by the Engineer in writing.

416.7. Payment. Drilled shafts will be paid for at the unit price bid per linear foot of "Drilled Shaft", or "Drilled Shaft (Non-reinforced)", of the specified diameter, subject to the following limitations for overruns authorized by the Engineer:

(1) Payment for individual completed shaft lengths up to and including five feet in excess of the maximum plan length shaft, as defined herein, will be made at the unit price bid per linear foot of the specified diameter of "Drilled Shaft".

(2) Payment for that portion of individual completed shaft length in excess of five feet and up to, and including, 15 feet more than the maximum plan length shaft, as defined herein, will be made at a unit price equal to 115 percent of the unit price bid per linear foot of the specified diameter of "Drilled Shaft".

(3) Payment for that portion of individual completed shaft length in excess of 15 feet and up to, and including, 25 feet more than the maximum plan length shaft, as defined herein, will be made at a unit price equal to 125 percent of the unit price bid per linear foot of the specified diameter of "Drilled Shaft".

(4) Payment for that portion of individual completed shaft length, over 25 feet in excess of the maximum plan length shaft, as defined herein, will be in accordance with Article 9.4.

(5) For extra depth drilling at interior bents and piers, the maximum plan length shaft shall be the maximum length shaft, regardless of diameter, for any interior pier or bent of any bridge included in the contract.

(6) For extra depth drilling for abutment bents and retaining walls, the maximum plan length shaft shall be the maximum length shaft, regardless of diameter, for any abutment bent of any bridge or of any retaining wall included in the contract.

(7) For extra depth drilling for sign structures, the maximum plan length shaft shall be the maximum length shaft, regardless of diameter, for any sign structures included in the contract.

(8) For extra depth drilling for illumination towers, the maximum plan length shaft shall be the maximum length shaft, regardless of diameter, for any illumination tower included in the contract.

The 20 percent limitation referred to in Item 4, will not apply to overruns due to extra depth of drilled shafts.

Bell footings, constructed to the specified dimensions or the altered dimensions authorized by the Engineer, will be paid for at the contract unit price bid per cubic yard for "Bell Footings". Authorized increase in bell footing diameter beyond three times the specified shaft diameter, unless specified on the plans, shall be considered as beyond the scope and intent of these specifications. Payment for such increased bell footing quantity shall be in accordance with Article 9.4.

Test holes, of the specified diameter, will be paid for at the contract unit price bid per linear foot for "Test Hole".

Test bells of the diameter and shape specified, or authorized by the Engineer, will be paid for at the contract unit price bid per cubic yard of "Test Bells".

Test holes or test bells required by the Engineer, but not otherwise specified by the contract plans, will be paid for in accordance with Article 9.4.

The foregoing unit prices shall be full compensation for making all excavations and soundings; for drilling all test holes and test bells; for doing any necessary pumping; for furnishing, placing and removing any required casing; for furnishing and placing all concrete and reinforcing steel, for all backfilling; and for furnishing all tools, labor, equipment and incidentals necessary to complete the work. When the bottom of any drilled shaft is ordered to be placed at an elevation below plan grade and a splice of reinforcement is required, no payment will be made for the extra reinforcement required, but it shall be considered subsidiary to the price bid per foot of shaft. No extra payment will be made for casings left in place.

No payment will be allowed for "Bell Footing" or for "Drilled Shaft" until the concrete has been placed, except that partial payments will be made for concrete materials and reinforcing steel delivered on the job in accordance with the provisions of Article 9.6.

ITEM 417

SLURRY DISPLACEMENT DRILLED SHAFTS

417.1. Description. This item shall govern for the "Slurry Displacement Method" of constructing foundations consisting of "reinforced concrete shafts" without bell footings.

The "Slurry Displacement Method" is defined as a construction procedure whereby the sides of the excavation are supported by a processed bentonite slurry, which is then displaced by concrete to form a continuous concrete shaft. Casing, other than surface casing, will not be permitted.

When bid under this item, the Contractor may construct drilled shafts using either the slurry displacement method or by the requirements of the Item, "Drilled Shaft Foundations", and in conformance with the details and dimensions shown on the plans.

Any required test loading of shafts shall be in accordance with the Item, "Foundation Test Load".

417.2. Material. All concrete and material shall be in accordance with the requirements of the Item, "Concrete for Structures", and the re-

quirements herein. Concrete for the slurry displacement method shall contain a minimum of 7 sacks of cement per cubic yard, use a Grade 3, 4 or 5 coarse aggregate, have a maximum 5.5 water/cement ratio, and shall have a slump of approximately 6 inches and a minimum 28 day design strength of 3600 psi. A retarding agent and entrained air are required. Reinforcing steel shall conform to the requirements of the Item, "Reinforcing Steel".

417.3. Construction.

(1) **Excavation.** The plans indicate the expected depths and elevations where satisfactory bearing material will be encountered.

The Contractor shall excavate through whatever materials encountered, to the dimensions and elevations shown on the plans. If satisfactory bearing material is not encountered at plan elevation, the bottom of the shaft may be adjusted as determined by the Engineer to comply with design requirements.

Shaft alignment shall be within a tolerance of 1 inch per 10 feet of depth.

The slurry shall consist of a commercial bentonite compatible with fresh water, and shall be mixed with fresh water to produce a viscous slurry capable of supporting the sides of the excavation and retain the excavation cuttings in suspension. The slurry shall contain 2 to 8 percent of bentonite additive by weight and shall produce a slurry with a specific gravity of 1.02 to 1.15 as directed by the Engineer.

The bentonite slurry may be mixed in the excavation as drilling progresses, or, premixed in a reservoir adjacent to the excavation of sufficient size to fill the excavation and for recovery of the slurry during concrete placement.

A head of slurry shall be maintained in the shaft excavation during and after drilling operations, at or near ground level.

When a surface casing is used, the slurry shall fill the excavation to at least 2 feet above the bottom of the casing. The surface casing shall be smooth and shall extend approximately to the top of the shaft. The surface casing shall not be extracted until after the concrete placing operation has been completed.

The diameter of drilled excavation shall not be less than the specified diameter of shaft; otherwise, the size of drilled excavation in which concrete is to be placed will be left to the discretion of the Contractor, except as noted herein.

Just prior to placement of reinforcing steel, a clean-out bucket of the proper size and/or other acceptable tool shall be passed down and up the excavation to remove loose cuttings or any material that may have fallen from its sides after the cessation of drilling operations.

If the mud slurry "sets up" or forms a gel prior to concrete placement, the gelled slurry shall be agitated to liquefaction just prior to concrete placement and at other times when directed by the Engineer.

If the elevation of the top of the shaft is below ground level or a problem exists with material caving into the excavation, a surface casing will be required from ground elevation to a point below the top of the shaft. Any surface casing used shall not remain in place unless otherwise indicated on the plans or permitted by the Engineer. It shall not be extracted until after the concrete placement has been completed.

Material excavated from shafts, including slurry, which is not used in the backfill around the completed bents or piers shall be disposed of as directed by the Engineer.

When the plans require shafts in abutment bents, the embankment at bridge ends shall be completed to grade and thoroughly compacted prior to drilling.

(2) **Reinforcing Steel.** The cage of reinforcing steel, consisting of longitudinal bars and spiral reinforcement, lateral ties or horizontal bands, shall be completely assembled and placed as a unit immediately prior to concrete placement, unless otherwise required by the site conditions and approved by the Engineer.

If the shaft is lengthened and the plans require full depth reinforcement, a minimum of one-half of the longitudinal bars required in the upper portion of the shaft shall be extended to the bottom, with proper lateral reinforcement. These bars may be lap spliced, spliced by welding, or may be unspliced bars of the proper length. Any splices required shall be in the lower portion of the shaft.

Where spiral reinforcement is used, it shall be tied or tack welded to the longitudinal bars at a spacing not to exceed 12 inches. Unless otherwise shown, welding will not be permitted within the top 15 feet of the steel cage.

Horizontal steel bands shall be placed and welded as shown on the plans.

The cage shall be held in position by some positive method, to minimize displacement during concrete placement. The support shall be concentric with the cage to prevent racking and distortion of the steel. A minimum of one-fourth of the vertical bars shall be supported.

Spacer blocks approved by the Engineer shall be used at sufficient intervals to insure concentric spacing for the entire length of the cage. Suitable guides will be required at the lower end of the reinforcing cage to assist in centering it in the excavation. The reinforcing cage shall be positioned prior to concrete placement.

The elevation of the top of the steel cage shall be carefully checked before and after concrete placing. Generally, any upward movement of the

steel not exceeding 2 inches, or any downward movement not exceeding 6 inches per 20 feet of shaft length will be acceptable. Displacement of the steel beyond these limits will be cause for rejection.

The minimum length of steel required for lap with column steel shall be maintained. Dowel bars may be used if the proper lap length is provided both into the shaft and into the column.

(3) **Concrete.** The work shall be performed in accordance with the provisions of the Item, "Concrete Structures", and with the requirements herein.

Concrete shall be placed as soon as possible after all excavation is completed and reinforcing steel is placed, and within the same days operation as the shaft excavation. Vibrating or rodding of concrete will not be permitted during concrete placement.

The concrete shall be placed through a closed tremie or pumped to the bottom of the excavation. Placement of the concrete shall be continuous from the beginning of placing until the shaft is completed. If a tremie is used, it shall be kept full of concrete and well submerged in the previously placed concrete at all times. If a pump is used, the discharge tube shall be submerged in the previously placed concrete at all times. Additional concrete shall be placed to assure the removal of any contaminated concrete at the top of the shaft.

If concreting is interrupted due to withdrawal of the submerged end of the tremie tube prior to completion of concrete placement, the tremie shall be removed, resealed at the bottom, forced well into the concrete already placed and recharged prior to progressing further. The Contractor will then be required to core the entire length of the completed shaft or otherwise prove that the shaft is free from inclusions or contamination unless this requirement is specifically waived in writing by the Engineer.

A riser block of equal diameter as the column and of a maximum height of 6 inches may be cast at the top of the completed shaft.

The top surface shall be cured and any construction joint area shall be treated as prescribed in the Item, "Concrete Structures".

No extra compensation will be allowed for concrete required to fill an oversize excavation.

417.4. Measurement. Acceptable shafts (of the specified diameter), complete in place, will be measured by the linear foot, regardless of the methods of construction.

417.5. Payment. Shafts will be paid for at the unit price bid per linear foot of "Slurry Displacement Drilled Shaft" of the specified diameter. The

quantity to be paid for will be the quantity shown on the plans unless specific changes in length have been authorized in writing by the Engineer.

The foregoing unit prices shall be full compensation for making all excavation; for doing any necessary pumping for furnishing and processing slurry; for furnishing, placing and removing any required surface casing; for furnishing and placing all concrete and reinforcing steel; for all backfilling; and for furnishing all tools, labor, equipment and incidentals necessary to complete the work. When the bottom of a shaft is ordered to be placed with a tip elevation below plan grade and a splice of reinforcement is required, no payment will be made for the extra reinforcement required, but it shall be considered subsidiary to the price bid per foot of shaft.

No payment will be allowed for "Slurry Displacement Drilled Shaft" until the concrete has been placed, except that partial payments may be made for concrete materials and reinforcing steel delivered on the job in accordance with the provisions of Article 9.6.

ITEM 420

CONCRETE STRUCTURES

420.1. Description. This item shall govern for the construction of all types of structures involving the use of concrete, except where the requirements are waived or revised by other governing specifications.

All structures shall be constructed in accordance with the details shown on the plans; in conformity with the pertinent provisions of the items contracted for; the incidental items referred to; and in conformity with the requirements herein.

420.2. Materials.

(1) Concrete. All concrete shall conform to the provisions of the Item, "Concrete for Structures".

The class of concrete for each type of structure or unit shall be as specified on the plans, or by pertinent governing specifications.

(2) Expansion Joint Material.

(a) Preformed Fiber Material. Preformed fiber expansion joint material shall be of the dimensions shown on the plans. At the Contractor's option, the material shall be one of the following types, unless otherwise noted on the plans:

1. "Preformed Bituminous Fiber Material" shall meet the requirements of the Standard Specifications for Preformed Expansion Joint Filler for Concrete Paving and Structural Construction, ASTM Designation: D1751.

2. "Preformed Non-Bituminous Fiber Material" shall meet the requirements of the Standard Specifications for Preformed Expansion Joint Filler for Concrete Paving and Structural Construction, ASTM Designation: D1751, except that the requirements pertaining to bitumen content, density and water absorption shall be voided.

(b) **Joint Sealing Material.** Unless otherwise noted on the plans, the sealer shall be a two-component, synthetic polymer conforming to the requirements of the Item, "Concrete Pavement".

(c) **Asphalt Board.** Asphalt board shall consist of two suitable asphalt-impregnated liners filled with a mastic mixture of asphalt and vegetable fiber and/or mineral fiber. Asphalt boards shall be smooth, flat and sufficiently rigid to permit installation. When tested in accordance with Test Method Tex-524-C, the asphalt board shall not deflect from the horizontal more than one inch in three and one-half inches.

(d) **Rebonded Neoprene Filler.** Rebonded neoprene filler shall consist of ground closed-cell neoprene particles, rebonded and molded into sheets of uniform thickness of the dimensions shown on plans, meeting the requirements of ASTM Designation: D1752, Type I. Certification that the material meets these requirements shall be furnished to the Engineer.

(3) **Waterstop.**

(a) Unless otherwise noted on the plans, copper waterstop shall be 16 ounce material conforming to the Item, "Metal for Structures".

(b) Rubber waterstop or Poly-Vinyl-Chloride (PVC) waterstop shall be in conformance with the Item, "Elastomeric Materials".

(c) Other types as specified on the plans.

(4) **Curing Materials.**

(a) Membrane curing shall conform to the Item, "Membrane Curing".

Type 1 (Resin Base Only) curing compound will be required for interim curing of slab concrete in bridge decks and top slabs of direct traffic culverts.

(b) Cotton mats shall consist of a filling material of cotton "bat" or "bats" (min. 12 oz. per sq. yd.); covered with unsized cloth (min. 6 oz. per sq. yd.); tufted or stitched to maintain stability; shall be free from tears; and shall be in good general condition.

(c) Polyethylene sheeting shall be opaque, of 4 mil. minimum thickness and free from visible defects.

(d) Burlap-Polyethylene mats shall be made from burlap impregnated on one side with a film of opaque polyethylene and free from visible defects.

(e) Laminated mats shall have not less than one layer of an impervious material such as polyethylene, vinyl plastic or other acceptable material (either as a solid sheet or impregnated into another fabric) and shall be free of visible defects.

(5) Admixtures.

Retarding water reducing and air entraining agents shall comply with the requirements of the Item, "Concrete Admixtures".

(6) Epoxy materials shall conform to the Item, "Epoxy".

420.3. General Requirements. Before starting work, the Contractor shall inform the Engineer fully of the construction methods he proposes to use, the adequacy of which shall be subject to the approval of the Engineer. Plans for forms and falsework for piers, superstructure spans over 20 feet long and for all widening details shall be submitted to the Engineer for review and approval. Similar plans shall be submitted for other units of the structure, if requested by the Engineer. The plans shall be prepared on standard 22 inch by 36 inch sheets and shall show all essential details of the proposed forms, falsework and bracing to permit a structural analysis. Four sets of such plans will be required.

Concurrence on the part of the Engineer in any proposed construction methods, approval of equipment, or of form and falsework plans does not relieve the Contractor of the responsibility for the safety or correctness of his methods and adequacy of his equipment or from carrying out the work in full accordance with the contract.

Unless otherwise provided on the plans, the time sequence in which construction operations may be carried on and in which completed structures may be opened to traffic shall be governed by the following:

(1) Superstructure members, forms, falsework, or erection equipment shall not be placed on the substructure before the concrete therein has attained a 500 psi flexural strength.

(2) Storage of materials on completed portions of a structure will not be permitted until all curing requirements for those particular portions have been met.

(3) No forms shall be erected on concrete footings supported by piling or drilled shafts until the concrete therein has attained a minimum flexural strength of 400 psi. Such work may begin on spread footings and culvert footings, after the concrete therein has aged at least two curing days. Concrete may be placed as soon as the forms and reinforcing steel are approved.

(4) The support of tie beam and/or cap forms by falsework placed on previously placed tie beams is permissible provided such beams have attained 500 psi flexural strength, curing requirements are completed, and they are properly supported to eliminate stresses not provided for in the design.

(5) Bridges and direct traffic culverts shall not be opened to construction traffic or to the traveling public until authorized by the Engineer in accordance with the following:

Authorization may be given after the last slab concrete has been in place at least 14 days for light construction traffic not to exceed three-quarter ton vehicles.

Authorization for normal construction traffic, and when necessary to the traveling public, may be given after the last slab concrete has been in place 30 days. Construction vehicles which exceed the legal load limit will not be authorized to cross structures. Vehicles used exclusively to transport ready-mixed concrete, and which have three axles, will be permitted only if the gross weight does not exceed 51,000 pounds. Speed of such vehicles shall be limited to no more than 10 miles per hour.

Where a detour is not readily available or economically feasible to use, an occasional crossing of a structure with overweight equipment may be permitted for relocating equipment only, but not for hauling material, provided a structural analysis of the structure using the exact equipment in question indicates no damage will result. The structural analysis must be approved by the Engineer. Temporary matting and/or other requirements may be imposed by the Engineer when an occasional crossing is permitted.

(6) Box culverts in fills may be opened to backfilling and compaction equipment when the concrete in the top slab has attained a 500 psi flexural strength, and may be opened to other traffic as soon as sufficient backfill and/or embankment has been placed over the top to protect them against damage from heavy construction equipment. The Contractor shall repair, at his expense, any damage inflicted on the culvert by construction traffic.

Forms or screed supports may be attached to I-beams or girders by welding subject to the following requirements:

(1) Welds will not be permitted on flanges in those areas specified on the plans or as directed by the Engineer.

(2) Welds shall be made in accordance with the Item, "Structural Welding".

420.4. Drains. Weep holes and roadway drains shall be installed and constructed as shown on the plans.

420.5. Expansion Joints. Joints and devices to provide for expansion and contraction shall be constructed where and as indicated herein or on the plans.

The bearing area under the expansion ends of concrete slabs and slab and girder spans shall be given a steel trowel finish, and finished to the exact grades required. The material used to separate expansion surfaces shall be as shown on the plans and placed so that concrete or mortar cannot be subsequently worked around or under it.

Concrete adjacent to armor joints and finger joints shall be placed carefully to avoid defective anchorage and porous or honeycombed concrete.

All open joints and joints to be filled with expansion joint material, shall be constructed using forms adaptable to loosening or early removal. To avoid expansion or contraction damage to the adjacent concrete, these forms shall be loosened as soon as possible after final concrete set to permit free movement of the span without requiring full form removal.

When designated as a "Type A" joint, preformed fiber joint material shall be used in the vertical joints of the roadway slab, curb, median or sidewalk and the top one inch thereof shall be filled with the joint sealing material specified herein. When a different joint sealing material is specified on the plans it shall be used.

Prior to placing the sealing material, the vertical faces of the joint shall be cleaned of all laitance by sandblasting or by mechanical routing. Cracked or spalled edges shall be repaired. The joint shall be blown clean of all foreign material and sealed.

Where preformed fiber joint material is used, it shall be anchored to the concrete on one side of the joint by light wire or nails.

Finished joints shall conform to the plan details with the concrete sections completely separated by the specified opening or joint material.

Soon after form removal and again where necessary after surface finishing, all concrete shall be removed from within the joint opening to secure full effectiveness of the expansion joint.

420.6. Construction Joints. The joint formed by placing plastic concrete in direct contact with concrete that has attained its initial set shall be deemed a construction joint. The term monolithic placement shall be interpreted to mean that the manner and sequence of concrete placing shall not create a construction joint.

Construction joints shall be of the type and at the locations shown on the plans. Construction joints other than those shown on the plans will not be permitted in bridge slabs. Additional joints in other members will not be permitted without written authorization from the Engineer. When additional joints are authorized, they shall have details equivalent to those shown on the plans for joints in similar locations.

Unless otherwise provided, construction joints shall be square and normal to the forms. Bulkheads shall be provided in the forms for all vertical joints.

Construction joints requiring the use of joint sealing material shall be as detailed on the plans. The joint sealing material will be specified on the plans without reference to joint type.

A concrete placement terminating at a horizontal construction joint shall have the top surface roughened thoroughly as soon as practicable after initial set is attained. The surfaces at bulkheads shall be roughened.

The hardened concrete surface shall be thoroughly cleaned of all loose material, laitance, dirt or foreign matter and saturated with water so it is moist when placing fresh concrete against it. Forms shall be drawn tight against the existing concrete and the joint surface flushed with grout just prior to placing the fresh concrete.

When required by the plans Type V epoxy material, shall be used for bonding fresh concrete to hardened concrete. The bonding epoxy shall be placed on a clean, dry surface and shall be tacky when the fresh concrete is placed.

420.7. Seal for Foundations. Concrete for foundation seals, unless otherwise specified, shall be Class "E", and placed in accordance with the requirements herein and Article 420.14. The top of the completed seal shall

not vary from plan grade or the grade established by the Engineer, by more than one foot.

Where a concrete seal is required by the plans, the design will be based on the normal water elevation as shown on the plans. If the foundation concrete can be placed in the dry at the time of construction, the seal will not be required. If additional seal is necessary for the conditions existing during the time of construction, its thickness shall be increased as deemed necessary by the Contractor and at his expense. If the conditions existing at the time of construction require a seal for placing the foundation concrete in the dry and none is provided on the plans, the Contractor shall place an adequate seal at his expense.

The seal shall be allowed to set for at least 36 hours before the cofferdam is de-watered, after which the top of the seal shall be cleaned of all laitance or other soft material, and all high spots exceeding the above limitation shall be cut off and removed.

420.8. **Falsework.** All falsework shall be designed and constructed to safely carry the maximum anticipated loads and to provide the necessary rigidity. Details of falsework construction shall be subject to review and approval by the Engineer in accordance with the provisions of Article 420.3.

For evaluating the adequacy of job fabricated falsework, a weight of 150 pounds per cubic foot shall be assumed for concrete, and a live load allowance of 50 pounds per square foot of horizontal surface of the form work shall be included. The maximum stresses shall not exceed 125 percent of the allowable stresses used by the Department for the design of structures.

Commercially produced structural units used in falsework shall not exceed the manufacturer's maximum allowable working load for moment and shear or end reaction. The maximum allowable working load shall include an allowance of 35 pounds per square foot of horizontal form surface and sufficient details and data shall be submitted for use in checking falsework details for approval.

All timber used in falsework centering shall be sound, in good condition, and free from defects which will impair its strength. When wedges are used to adjust falsework to desired elevations, they shall be used in pairs to insure even bearing.

Sills or grillages shall be large enough to support the superimposed load without settlement, and unless founded on solid rock, shale or other hard materials, precautions shall be taken to prevent yielding of the supporting material.

Falsework which cannot be founded on a satisfactory spread footing shall be placed on piling or drilled shafts having a bearing capacity suffi-

cient to support the superimposed load without settlement. Falsework piling shall be driven to the required resistance determined by the applicable formula given in the Item, "Driving Piling". Drilled shafts for falsework shall be designed to carry the superimposed load using both skin friction and point bearing.

In general, each falsework bent shall be capped transversely by a member of proper size. A short cap section forming a T-head may be substituted to permit the removal of portions of the forms without disturbing the falsework. Caps shall be securely fastened to each pile or column in the bent and set at the proper elevation to produce, in conjunction with the use of approved wedges or jacks, permanent camber indicated on the plans or specified, plus a construction camber covering allowance for deformation of the forms and falsework. The use of wedges to compensate for incorrectly cut bearing surfaces will not be permitted. Welding, when used, shall conform to requirements of the Item, "Structural Welding". Each falsework bent shall be securely braced to provide the stiffness required with the bracing securely fastened to each pile or column it crosses.

In setting falsework for arches, allowances shall be made for settlement of falsework, deflection of the arch and permanent camber. Provision shall be made by suitable wedges, sand jacks, or other acceptable devices for the controlled lowering of falsework when the arch is swung. Falsework may be required to be placed on jacks to provide for settlement correction during concrete placement.

When the falsework is no longer required, it shall be removed. Falsework piling shall be pulled or cut off not less than six inches below finished ground level. Falsework, piling or drilled shafts in a stream, lake, or bay shall be completely removed to a point specified by the Engineer to prevent any obstruction to the waterway.

420.9. Forms. Forms for precast prestressed concrete members and for prestressed piling shall be constructed in accordance with the provisions of the Item, "Prestressed Concrete Structures".

(1) General. Except where otherwise specified, forms may be of either timber or metal.

Forms for round columns exposed to view shall be of steel, except that other materials will be allowed with written permission of the Engineer.

Studs, joists, wales or other devices used for form supports shall be of sufficient section and rigidity to withstand undue bulging or settling of the forms. Any device or method used for form support shall be subject to the approval of the Engineer.

Forming plans shall be submitted for approval subject to the requirements of Article 420.3. Forms shall be designed for the pressure ex-

erted by a liquid weighing 150 pounds per cubic foot. The rate of placing the concrete shall be taken into consideration in determining the depth of the equivalent liquid. Job fabricated forms shall be designed for an additional live load of 50 pounds per square foot of horizontal surface. The maximum unit stresses shall not exceed 125 percent of the allowable stresses used by the Department for the design of structures.

Commercially produced structural units used in form work shall not exceed the manufacturer's maximum allowable working load for moment, shear or end reaction. The maximum working load shall include a live load of 35 pounds per square foot of horizontal form surface and sufficient details and data shall be submitted for use in checking form work details for approval.

Forms shall be practically mortar-tight, rigidly braced and strong enough to prevent bulging between supports and maintained to the proper line and grade during concrete placement. Forms shall be maintained in a manner that will prevent warping and shrinkage.

Offsets at form joints shall not exceed one-sixteenth of an inch. Form supports for slabs may not be welded to the top flange of I-beams or girders except in accordance with the provisions of Article 420.3.

Deflections due to cast-in-place slab concrete and railing shown in the dead load deflection diagram shall be taken into account in the setting of slab forms.

All forms and footing areas shall be cleaned of any extraneous matter before placing concrete.

Permission to place concrete will not be given until all of such work is complete to the satisfaction of the Engineer.

If, at any stage of the work, the forms show signs of bulging or sagging, the portion of the concrete causing such condition shall be removed immediately, if necessary, and the forms shall be reset and securely braced against further movement.

(2) **Timber Forms.** Lumber for forms shall be properly seasoned, of good quality, and free from imperfections which would affect its strength or impair the finished surface of the concrete. The lumber used for facing or sheathing shall be finished on at least one side and two edges and shall be sized to uniform thickness.

Form lining will be required for all formed surfaces, except for the inside of culvert barrels, inlets, manholes and box girders; the bottom of bridge decks between beams or girders; surfaces that are subsequently covered by backfill material or are completely enclosed; and, any surface formed by a single finished board. Lining will not be required when plywood forms are used.

Form lining shall be of an approved type such as masonite or plywood. Thin membrane sheeting such as polyethylene sheets shall not be used for form lining.

Forms may be constructed of plywood not less than one-half inch in thickness. The grain of the face plies on plywood forms shall be placed parallel to the span between the supporting studs or joists.

Plywood used for forming surfaces which remain exposed shall be equal to that specified as B-B Plyform Class I or Class II Exterior of the U.S. Department of Commerce, National Bureau of Standards, U.S. Product Standard, latest edition.

Forms or form lumber to be reused shall be maintained clean and in good condition. Any lumber which is split, warped, bulged, marred or has defects that will produce inferior work shall not be used and shall be promptly removed from the work.

Studs and joists shall be spaced so that the facing form material remains in true alignment under the imposed loads.

Wales shall be spaced close enough to hold forms securely to the designated lines and scabbed at least 4 feet on each side of joints to provide continuity. A row of wales shall be placed near the bottom of each placement.

Facing material shall be placed with parallel and square joints and securely fastened to supporting studs.

Forms for surfaces receiving only an ordinary finish and exposed to view shall be placed with the form panels symmetrical, i.e., long dimensions set in the same direction. Horizontal joints shall be continuous.

Molding for chamfer strips or other uses shall be made of materials of a grade that will not split when nailed and which can be maintained to a true line without warping. Wood molding shall be mill cut and dressed on all faces. Unless otherwise provided herein or on the plans, forms shall be filleted at all sharp corners and edges with triangular chamfer strips measuring three-fourths inch on the sides.

Except at structures where railing is to be attached, culvert headwall heights shall be adjusted as necessary to provide a maximum projection of three inches above the roadway slope unless otherwise directed by the Engineer. At the entrance of all box culverts, a three inch chamfer shall be provided along the bottom edge of the top slab. Reinforcing steel shall be adjusted as necessary to provide a minimum one and one-fourth inch clear cover. No changes will be made in quantities and no additional compensation will be allowed for this work.

All forms shall be constructed to permit their removal without marring or damaging the concrete. The forms may be given a slight draft to permit ease of removal.

Metal form ties of an approved type or a satisfactory substitute shall be used to hold forms in place and shall be of a type that permits ease of removal of the metal as hereinafter specified.

All metal appliances used inside of forms for alignment purposes shall be removed to a depth of at least one-half inch from the concrete surface. They shall be made so the metal may be removed without undue chipping or spalling, and when removed, shall leave a smooth opening in the concrete surface. Burning off of rods, bolts or ties will not be permitted.

Any wire ties used shall be cut back at least one-half inch from the face of the concrete.

Devices holding metal ties in place shall be capable of developing the strength of the tie and adjustable to allow for proper alignment.

Metal and wooden spreaders which are separate from the forms shall be removed entirely as the concrete is being placed.

Adequate clean-out openings shall be provided for narrow walls and other locations where access to the bottom of the forms is not readily attainable.

Prior to placing concrete, the facing of all forms shall be treated with bond breaking coating of such composition that it will not discolor or otherwise injuriously affect the concrete surface. Care shall be exercised to prevent coating of the reinforcing steel.

(3) **Metal Forms.** The foregoing requirements for timber forms regarding design, mortar-tightness, filleted corners, beveled projections, bracing, alignment, removal, reuse and wetting shall also apply to metal forms, except that these will not require lining, unless specifically noted on the plans.

The thickness of form metal shall be as required to maintain the true shape without warping or bulging. All bolt and rivet heads on the facing sides shall be countersunk. Clamps, pins or other connecting devices shall be designed to hold the forms rigidly together and to allow removal without injury to the concrete. Metal forms which do not present a smooth surface or which line up improperly shall not be used. Metal shall be kept free from rust, grease or other foreign materials.

(4) **Form Supports for Overhang Slabs.** Form supports which transmit a horizontal force to a steel girder or beam, or to a prestressed concrete beam will be permitted, providing a satisfactory structural analysis has

been made of the effect on the girder or beam and approval is granted by the Engineer.

When overhang brackets are used on prestressed concrete beam spans, with slab overhangs not exceeding 3′-6″ from outside edge of top beam flange, the following shall apply:

(a) For spans with Type A, B, C, III, IV or V beams, with skew angle less than 15° no bracing will be required, provided the space between in-place diaframs does not exceed 30 feet. For skews greater than 15°, a No. 5 bar will be required at each corner of the span to be set perpendicular to the outside and adjacent interior beams as close to the ends of span as possible and welded to the projecting reinforcement (R-bars).

(b) For Type A, B, C, III, IV or V beams with in-place diafram spacing exceeding 30 feet and all Type 48″, 54″, 60″, 66″, 72″ and 54″ Modified (12″ web) beams, additional bracing will be required as shown in the plans.

(c) For spans in which the overhang exceeds 3′-6″, additional support will be required for the outside beams regardless of the type beam used. Details of the proposed support system shall be submitted by the Contractor for approval.

Holes in steel members for support of overhang brackets may be punched or drilled full size or may be torch cut to one-fourth inch under size and reamed full size. In no case shall the holes be burned full size. The hole shall be left open unless specified on the plans to be filled with a button head bolt. They shall never be filled by welding.

All welding shall be done by a qualified welder and in accordance with the Item, "Structural Welding".

420.10. Placing Reinforcement. Reinforcement in concrete structures shall be placed carefully and accurately and rigidly supported as provided in the Item, "Reinforcing Steel". Reinforcing steel supports shall not be welded to I-beams or girders or to reinforcing steel except where shown in the plans to be permissible.

Post tensioning ducts, when required, shall be checked and cleaned of all obstructions and placed in accordance with the approved prestressing details, and in accordance with the Item, "Prestressing". Immediately after concrete placement they shall be cleaned of any concrete, mortar or grout leakage which might clog the duct.

420.11. Placing Concrete-General. The minimum temperature of all concrete at the time of placement shall be not less than 50 F.

The maximum temperature of cast-in-place concrete in bridge slabs and top slab of direct traffic structures shall not exceed 85 F when placed. Concrete diaframs, parapets, concrete portions of railing, curbs and sidewalks,

unless monolithically placed with the slab, will not be subject to the above maximum. Other portions of structures, when so noted on the plans, shall require the temperature control specified.

For continuous placement of the deck on continuous steel units, the initial set of the concrete shall be retarded sufficiently to insure that it remains plastic in not less than three spans immediately preceding the one being placed. For simple spans, retardation shall be required only if necessary to complete finishing operations or as required by Article 420.13.

The consistency of the concrete as placed should allow the completion of all finishing operations without the addition of water to the surface. When conditions are such that additional moisture is needed for finishing, the required water shall be applied to the surface by *fog spray only,* and shall be held to a minimum amount. Fog spray for this purpose may be applied with hand operated fogging equipment.

The maximum time interval between the addition of cement to the batch, and the placing of concrete in the forms shall not exceed the following:

Air or Concrete Temperature (Whichever is Higher)	Maximum Time (Addition of Water or Cement to Placing in Forms)
Non-Agitated Concrete	
Over 80 F	15 Minutes
35 F to 79 F	30 Minutes
Agitated Concrete	
90 F or Above	45 Minutes
75 F to 89 F	60 Minutes
35 F to 74 F	90 Minutes

The use of an approved retarding agent in the concrete will permit the extension of each of the above temperature-time maximums by 30 minutes, for bridge decks, top slabs of direct traffic culverts and cased drilled shafts, and one hour for all other concrete except that the maximum time shall not exceed 30 minutes for non-agitated concrete.

From the time of initial strike off of the concrete until finishing is completed and required interim curing is in place, the unformed surfaces of slab concrete in bridge decks and top slabs of direct traffic culverts shall be fogged when necessary to replace water loss due to evaporation.

Fogging equipment shall be capable of applying water in the form of a fine mist, not a spray. It may be, water pumped under adequate high pressure, or a combination of air and water pumped under high pressure; either system in combination with a suitable atomizing nozzle. The equip-

ment shall be sufficiently portable for use in the direction of any prevailing wind. It shall be adaptable for intermittent use as directed by the Engineer to prevent excessive wetting of the concrete.

A screed may be placed directly on adjacent previously placed slabs for checking and grading of a slab to be placed after they have aged not less than 24 hours. Actual screeding there from may be done after they have aged at least 48 hours.

Interim curing will be required for slab concrete in bridge decks and top slabs of direct traffic culverts immediately upon completion of final finish. Type 1 membrane curing compound (Resin Base Only) will be required. Water curing will be required in accordance with Article 420.21., Curing Concrete, and shall be commenced as soon as possible without damaging the surface finish.

The Contractor shall give the Engineer sufficient advance notice before placing concrete in any unit of the structure to permit the inspection of forms, reinforcing steel placement, and other preparations.

The sequence of placing concrete shall be as provided on the plans as required herein.

Concrete placement will not be permitted when impending weather conditions will impair the quality of the finished work. If rainfall should occur after placing operations are started, the Contractor shall provide ample covering to protect the work. If conditions of wind, humidity and temperature are such that concrete cannot be placed without cracking, concrete placement shall be done in the early morning or at night. When concrete mixing, placing and finishing is done in other than daylight hours, provisions will be made to adequately light the entire placement site.

The method of handling, placing and consolidation of concrete shall minimize segregation and displacement of the reinforcement, and produce a uniformly dense and compact mass. Concrete shall not have a free fall of more than 5 feet, except in the case of thin walls such as in culverts. Any hardened concrete spatter ahead of the plastic concrete shall be removed.

The method and equipment used to transport concrete to the forms shall be capable of maintaining the rate of placement required by the plans or by the Engineer. Concrete may be transported by buckets, chutes, buggies, belt conveyors, pumps or other acceptable methods.

When belt conveyors or pumps are used, sampling for testing will be done at the discharge end. Concrete transported by conveyors shall be protected from sun and wind, if necessary, to prevent loss of slump and

workability. Pipes through which concrete is pumped shall be shaded and/or wrapped with wet burlap, if necessary, to prevent loss of slump and workability. Concrete shall not be transported through aluminum pipes, tubes or other aluminum equipment. The coarse aggregate content of the concrete shall be within the limits specified in the Item, "Concrete for Structures".

Chutes, troughs, conveyors or pipes shall be arranged and used so that the concrete ingredients will not be separated. When steep slopes are necessary, the chutes shall be equipped with baffle boards or made in short lengths that reverse the direction of movement, or the chute ends shall terminate in vertical down-spouts. Open troughs and chutes shall extend, if necessary, down inside the forms or through holes left in them. All transporting equipment shall be kept clean and free from hardened concrete coatings. Water used for cleaning shall be discharged clear of the concrete.

Each part of the forms shall be filled by depositing concrete as near its final position as possible. The coarse aggregate shall be worked back from the face and the concrete forced under and around the reinforcement bars without displacing them. Depositing large quantities at one point and running or working it along the forms will not be allowed.

Concrete shall be deposited in the forms in layers of suitable depth but not more than 36 inches in thickness, unless otherwise directed by the Engineer.

Cold joints in a monolithic placement shall be avoided. The sequence of successive layers or adjacent portions of concrete shall be such that they can be vibrated into a homogeneous mass with the previously placed concrete. Not more than one hour shall elapse between adjacent or successive placements of concrete.

An approved retarding agent shall be used to control stress cracks and/or cold joints in mass placements where differential settlement and/or setting time may induce stress cracking, such as on falsework, in deep girder stems, etc.

Openings in forms shall be provided, if needed, for the removal of laitance or foreign matter of any kind.

All forms shall be wetted thoroughly before the concrete is placed therein.

All concrete shall be well consolidated and the mortar flushed to the form surfaces by continuous working with immersion type vibrators. Vibrators which operate by attachment to forms or reinforcement will not be permitted, except on steel forms. At least one stand-by vibrator shall be provided for emergency use in addition to the ones required for placement.

The concrete shall be vibrated immediately after deposit. Prior to the beginning of work, a systematic spacing of the points of vibration shall be established to insure complete consolidation and thorough working of the concrete around the reinforcement, embedded fixtures, and into the corners and angles of the forms. Immersion type vibrators shall be inserted vertically, at points 18 to 30 inches apart, and slowly withdrawn. The vibrator may be inserted in a sloping or horizontal position in shallow slabs. The entire depth of each lift shall be vibrated, allowing the vibrator to penetrate several inches into the preceding lift. Concrete along construction joints shall be thoroughly consolidated by operating the vibrator along and close to but not against the joint surface. The vibration shall continue until thorough consolidation, and complete embedment of reinforcement and fixtures is produced, but not long enough to cause segregation. Vibration may be supplemented by hand spading or rodding, if necessary, to insure the flushing of mortar to the surface of all forms.

Holes for anchor bolts in piers, abutments, bents or pedestals may be drilled or formed by the insertion of oiled wooden plugs or metal sleeves in the plastic concrete. Formed holes shall be large enough to permit horizontal adjustments of the bolts. The bolts shall be carefully set in mortar. In lieu of the above, anchor bolts may be set to exact locations when the concrete is placed.

Slab concrete shall be mixed in a plant located off the structure. Carting or wheeling concrete batches over completed slabs will not be permitted until they have aged at least four full curing days. If carts are used, timber planking will be required for the remainder of the curing period. Carts shall be equipped with pneumatic tires. Curing operations shall not be interrupted for the purpose of wheeling concrete over finished slabs.

After concrete has taken its initial set, at least one curing day shall elapse before placing strain on projecting reinforcement to prevent damage to the concrete.

The storing of reinforcing or structural steel on completed roadway slabs generally shall be avoided and, when permitted, shall be limited to quantities and distribution that will not induce excessive stresses.

420.12. Placing Concrete in Cold Weather.

(1) **General.** The Contractor is responsible for the protection of concrete placed under any and all weather conditions. Permission given by the Engineer for placing during cold weather will in no way relieve the Contractor of the responsibility for producing concrete equal in quality to that placed under normal conditions. Should concrete placed under such conditions prove unsatisfactory, it shall be removed and replaced.

(2) **Cast-in-Place Concrete.** Concrete may be placed when the atmospheric temperature is not less than 35 F. Concrete shall not be placed in

contact with any material coated with frost or having a temperature less than 32 F.

Aggregates shall be free from ice, frost and frozen lumps. When required, in order to produce the minimum specified concrete temperature, the aggregate and/or the water shall be heated uniformly, in accordance with the following:

The water temperature shall not exceed 180 F, and/or the aggregate temperature shall not exceed 150 F. The heating apparatus shall heat the mass of aggregate uniformly. The temperature of the mixture of aggregates and water shall be between 50 F and 85 F before introduction of the cement.

All concrete shall be effectively protected as follows:

(a) The temperature of slab concrete of all unformed surfaces shall be maintained at 50 F or above for a period of 72 hours from time of placement and above 40 F for an additional 72 hours.

(b) The temperature at the surface of all concrete in bents, piers, culvert walls, retaining walls, parapets, wingwalls, bottom of slabs, and other similar formed concrete shall be maintained at 40 F or above for a period of 72 hours from time of placement.

(c) The temperature of all concrete, including the bottom slabs of culverts placed on or in the ground, shall be maintained above 32 F for a period of 72 hours from time of placement.

Protection shall consist of providing additional covering, insulated forms or other means, and if necessary, supplementing such covering with artificial heating. Curing as specified under Article 420.21 shall be provided during this period until all requirements for curing have been satisfied.

When impending weather conditions indicate the possibility of the need for such temperature protection, all necessary heating and covering material shall be on hand ready for use before permission is granted to begin placement.

Sufficient extra test specimen will be made and cured with the placement to ascertain the condition of the concrete as placed prior to form removal and acceptance.

(3) **Precast Concrete.** A fabricating plant for precast products which has adequate protection from cold weather in the form of permanent or portable framework and covering, which protects the concrete when placed in the forms, and is equipped with approved steam curing facilities, may place concrete under any low temperature conditions provided:

(a) The framework and covering are placed and heat is provided for the concrete and the forms within one hour after the concrete is placed. This

shall not be construed to be one hour after the last concrete is placed, but that no concrete shall remain unprotected longer than one hour.

(b) Steam heat shall keep the air surrounding the concrete between 50 F and 85 F for a minimum of three hours prior to beginning the temperature rise which is required for steam curing.

(c) For fabricating plants without the above facilities and for job site precast products, the requirements of Sub-article 420.12(2) will apply.

420.13. Placing Concrete in Hot Weather. Unless otherwise directed by the Engineer, when the temperature of the air is above 85 F, an approved retarding agent will be required in all concrete used in superstructures and top slabs of direct traffic culverts. An approved retarding agent will be required in all cased drilled shafts regardless of temperature.

420.14. Placing Concrete in Water. Concrete shall be deposited in water only when specified on the plans or with written permission of the Engineer. The forms or cofferdams shall be sufficiently tight to prevent any water current passing through the space in which the concrete is being deposited. Pumping will not be permitted during the concrete placing, nor until it has set for at least 36 hours.

The concrete shall be placed with a tremie, closed bottom-dump bucket or other approved method, and shall not be permitted to fall freely through the water nor shall it be disturbed after it has been placed. Its surface shall be kept approximately level during placement.

The tremie shall consist of a water-tight tube 14 inches or less in diameter. It shall be constructed so that the bottom can be sealed and opened after it is in place and fully charged with concrete. It shall be supported so that it can be easily moved horizontally to cover all the work area and vertically to control the concrete flow. The lower end of the tremie shall be submerged in the concrete at all times.

Bottom-dump buckets used for underwater placing shall have a capacity of not less than one-half cubic yard. It shall be lowered gradually and carefully until it rests upon the concrete already placed and raised very slowly during the upward travel; the intent being to maintain still water at the point of discharge and to avoid agitating the mixture.

The placing operations shall be continuous until the work is complete.

Unless otherwise specified all concrete placed under water, except seal concrete, shall contain an additional sack of cement per cubic yard.

420.15. Placing Concrete in Superstructure. Unless otherwise specified on the plans, simple span bridge slabs shall be placed without transverse construction joints by using either a mechanical longitudinal screed, or a self propelled transverse finishing machine. For small placements or for

unusual conditions, the Engineer may waive the mechanical screed requirement and permit the use of manually operated screeding equipment. The screed shall be adequately supported on a header or rail system sufficiently stable to withstand the longitudinal or lateral thrust of the equipment. Unless otherwise shown on the plans, temporary intermediate headers will be permitted for placements exceeding 50 feet in length for the longitudinal screed, provided the rate of placement is rapid enough to prevent a cold joint and these headers are designed for early removal to permit satisfactory consolidation and finish of the concrete at their locations.

Unless otherwise specified on the plans, slabs on continuous units shall be placed in one continuous operation without transverse construction joints using a mechanical longitudinal screed, or a self propelled transverse finishing machine. For unusual conditions, such as widening, variable cross slopes or transitions, the Engineer may waive the mechanical screed requirement and permit the use of manually operated screeding equipment. Rails for transverse finishing machines supported from the beams or girders shall be installed so they may be removed without damage to the slab. Bond between removable supports and the concrete shall be prevented in a manner acceptable to the Engineer. Rail support parts which remain embedded in the slab shall not project above the upper mat of reinforcing steel. Rail or screed supports attached to I-beams or girders shall be subject to the requirements of Article 420.3.

For continuous placements (slab on steel or prestressed members, continuous slab and girder units or continuous slab spans) a minimum rate of placement will be specified on the plans. For simple span units, a minimum rate of placement for a particular unit may be specified on the plans. If not so specified, the Contractor shall satisfy the Engineer that the equipment furnished is capable of placing, finishing and curing the slab at an acceptable rate to insure compliance with the specifications.

The profile gradeline may require adjustment, due to variation in beam camber and other factors, to obtain the required cover over the slab reinforcement. Beams shall be set in a sufficient number of spans so that when adjustment is necessary the profile gradeline can be adjusted over suitable increments so that the revised gradeline will produce a smooth riding surface.

One or more passes shall be made with the screed over the bridge deck segment prior to the placement of concrete thereon to insure proper operation and maintenance of grades and clearances.

Slab concrete shall be deposited between the exterior beam and the adjacent beam prior to placing concrete in the overhang portion of the slab.

For transverse slab finishing, concrete shall be placed in transverse strips, proceeding from the lowest end of the placement.

For longitudinal screeding, concrete shall be placed in longitudinal strips starting at a point in the center of the segment adjacent to one side, except as provided herein, and the strip completed by placing uniformly in both directions toward the ends except that for spans on a grade of 1.5 percent or more, placing shall start at the lowest end. The width of strips shall be such that the concrete therein will remain plastic until the adjacent strip is placed. Where monolithic curb construction is specified, the concrete shall be placed therein in proper sequence to be monolithic with the adjacent longitudinal strips of the slabs.

Forms for the bottom surface of concrete slabs, girders and overhangs shall be maintained true to the required vertical alignment during concrete placing. An approved system of checking shall be used to detect any vertical movement of the forms or falsework. Unless otherwise provided on the plans, girders, slab and curbs of deck girder spans shall be placed monolithically. The girder stems shall be filled first and the slab concrete placed within the time limits specified in Article 420.11.

Construction joints when permitted for slab placements on steel and prestressed concrete beams shall be as shown on the plans. Where plans permit segmental placing, without specifying a particular order of placement, any logical placing sequence which will not result in the overstressing of any of the supporting members will be permitted subject to the approval of the Engineer.

Any falsework under steel girder or truss spans shall be released and the spans swung free on their permanent supports before placing any slab concrete thereon.

When the curb forms are filled, the top of curb and sidewalk section shall be brought to the correct camber and alignment and finished as described in Articles 420.19 and 420.24.

The slab shall be finished as specified in Article 420.20.

420.16. Placing Concrete in Concrete Arches. Concrete shall be placed in arch rings so the loading is kept symmetrical on the falsework. The arch rings and ribs shall be placed in one continuous operation unless otherwise specified or permitted by the Engineer. The spandrel walls or columns and the beams shall not be placed until the arch is swung. Floor slab, railing, parapet walls, etc., shall not be placed until all spandrels are complete. Slab placement shall be symmetrical about the transverse centerline so the loading of the arch is kept approximately symmetrical.

The placing sequence shall be as shown on the plans.

420.17. Placing Concrete in Box Culverts. In general, construction joints will be permitted only where shown on the plans.

Where the top slab and walls are placed monolithically in culverts more than 4 feet in clear height, an interval of not less than one nor more than 2 hours shall elapse before placing the top slab to allow for shrinkage in the wall concrete.

The base slab shall be finished accurately at the proper time to provide a smooth uniform surface. Top slabs which carry direct traffic shall be finished as specified for roadway slabs in Article 420.20. Top slabs of fill type culverts shall be given a reasonably smooth float finish.

420.18. Placing Concrete in Foundations and Substructure. Concrete shall not be placed in footings until the depth and character of the foundation has been inspected by the Engineer and permission has been given to proceed.

Placing of concrete footings upon seal courses will be permitted after the cofferdams are free from water and the seal course cleaned. Any necessary pumping or bailing during the concreting operation shall be done from a suitable sump located outside the forms.

All temporary wales or braces inside cofferdams shall be constructed or adjusted as the work proceeds to prevent unauthorized construction joints.

When footings can be placed in a dry excavation without the use of cofferdams, forms may be omitted, if desired by the Contractor and approved by the Engineer, and the entire excavation filled with concrete to the elevation of the top of footing. In this case measurement for payment will be based on the footing dimensions shown on the plans.

Concrete in columns shall be placed monolithically unless otherwise provided. Columns and caps and/or tie beams supported thereon may be placed in the same operation. To allow for shrinkage of the column concrete, it shall be placed to the lower level of the cap or tie beam and placement delayed for not less than one hour nor more than two before proceeding.

420.19. Treatment and Finishing of Horizontal Surfaces Except Roadway Slabs. All unformed upper surfaces shall be struck off to grade and finished. The use of mortar topping for surfaces under this classification will not be permitted.

After the concrete has been struck off, the surface shall be floated with a suitable float. Bridge sidewalks shall be given a wood float or broom finish or may be striped with a brush, as specified by the Engineer.

The tops of caps and piers between bearing areas shall be sloped slightly from the center toward the edge, and the tops of abutments and transition bents sloped from the backwall to the edge, as directed by the Engineer, so that water will drain from the surface, and shall be given a smooth trowel finish. When required by the plans, the coating of caps and piers shall be

done using Type X epoxy material. Unless otherwise noted on the plans, the color shall be concrete gray. Bearing areas for steel units shall be constructed in accordance with Article 441.33, Bearing and Anchorage.

Bearing seat build-ups or pedestals for concrete units may be cast integrally with the cap or with a construction joint as follows:

The construction joint area under the bearing shall have the surface roughened thoroughly as soon as practical after initial set is obtained. The bearing seat build-ups shall be placed using a latex based grout or an epoxy grout, mixed in accordance with the manufacturer's recommendation. Pedestals shall be placed using Class "C" concrete, reinforced as shown on the plans.

Bearing areas under elastomeric pads shall be given a slightly textured, wood float finish.

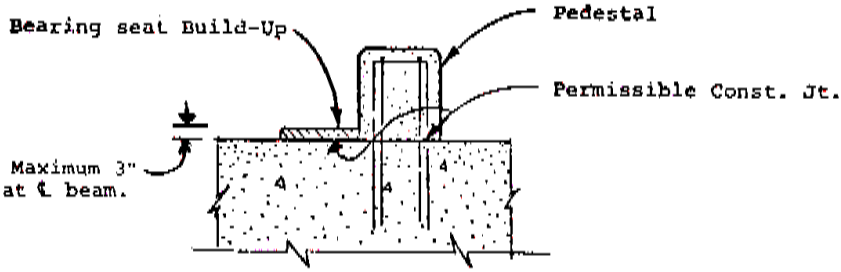

SEC. THRU. CAP

420.20. Finish of Roadway Slabs. In all roadway slab finishing operations, camber for specified vertical curvature and transverse slopes shall be provided.

For concrete slab or concrete girder spans cast in place on falsework, an additional amount of camber shall be provided to offset the initial and final deflections of the span. The additional amount of camber shall be determined from the dead load deflection diagram shown on the plans. When dead load deflection is not shown on the plans, the additional amount of camber shall be one-eighth inch per ten foot of span length but not to exceed one-half inch. For pan girder spans the additional camber for initial and final deflections shall be approximately one-half inch for 30 foot spans and three-fourths inch for 40 foot spans.

Roadway slabs supported on prestressed concrete, steel beams or girders shall receive no additional camber, except that for slabs without vertical curvature, the longitudinal camber shall be approximately one-fourth inch.

Dead load deflection shall be taken into account in setting the grades of headers and rail systems.

Work bridges or other suitable facilities shall be provided from which to perform all finishing operations and check measurements for slab thickness and reinforcement cover.

As soon as the concrete has been placed and vibrated in a section of sufficient width to permit working, the surface shall be approximately leveled, struck off and screeded, carrying a slight excess of concrete ahead of the screed to insure filling of all low spots. The screed shall be designed rigid enough to hold true to shape and shall have sufficient adjustments to provide for the required camber. A vibrating screed may be used if heavy enough to prevent undue distortion. The screeds shall be provided with a metal edge.

Longitudinal screeds shall be moved across the concrete with a saw-like motion while their ends rest on headers or templates set true to the roadway grade or on the adjacent finished slab.

The surface of the concrete shall be screeded a sufficient number of times, and at such intervals to produce a uniform surface, true to grade and free of voids.

If necessary, the screeded surface shall be worked to a smooth finish with a long handled wood or metal float of the proper size, or hand floated from bridges over the slab.

When required by the Engineer, the Contractor shall perform sufficient checks with a long handled 10 foot straightedge on the plastic concrete to insure that the final surface will be within the tolerances specified below. The check shall be made with the straightedge parallel to the centerline. Each pass thereof shall lap half of the preceding pass. All high spots shall be removed and all depressions over one-sixteenth inch in depth shall be filled with fresh concrete and floated. The checking and floating shall be continued until the surface is true to grade and free of depressions, high spots, voids or rough spots.

Rail support holes shall be filled with concrete and finished to match the top of the slab.

Unless otherwise shown on the plans, when no additional wearing course is to be placed upon the concrete slab, the surface shall be finished with adequate equipment to provide the texture specified herein, with the grooves or striations of the final finish parallel to the structure centerline; however, the Engineer may authorize transverse grooves or striations if desired. It is the intent that the average texture depth, resulting from the number of tests directed by the Engineer, be not less than 0.05-inches with a minimum texture depth of 0.04-inches for any one test when tested in accordance with

Test Method Tex-436-A. Should the texture depth fall below that intended, the finishing procedures shall be revised to produce the desired texture.

At the option of the Contractor, or when required by the plans, the surface shall be given its final texture by saw grooving to meet the above requirements. Saw grooving may be done a minimum of four days after the slab concrete has been placed. If saw grooving is done prior to the completion of curing, the curing shall be continued after sawing to provide the minimum curing time required.

When the plans require that a concrete overlay be placed on the slab (new construction) or on prestressed concrete box beams, the slab or the top surface of shear key and diafram concrete shall be given a metal tine finish of approximately 0.050 inches.

When the plans require that an asphaltic seal and overlay be placed on the slab (new construction) or on prestressed concrete box beams, the slab or top surface of shear key and diafram concrete shall be given a lighly textured broom finish, similar to a sidewalk finish having an average texture depth of approximately 0.025 inches.

Straight edge requirements will be required on slabs (new construction) to be overlayed.

After the concrete slab has attained its final set, the Engineer may require that the finished surface be tested with a standard 10 foot straightedge. The straightedge shall be used parallel to the centerline of the structure to bridge any depressions and touch high spots. Ordinates of the irregularities, measured from the face of the straightedge to the surface of the slab, should normally not exceed one-eighth of an inch, making proper allowances for camber, vertical curve and surface texture; however, occasional variations exceeding this will be acceptable if, in the opinion of the Engineer, it will not produce unacceptable riding qualities.

When directed by the Engineer, irregularities exceeding the above shall be corrected. Areas which are corrected to produce satisfactory riding qualities shall be provided with an acceptable surface texture in a manner approved by the Engineer.

420.21. Curing Concrete. The Contractor shall inform the Engineer fully of the methods and procedures proposed for curing; shall provide the proper equipment and material in adequate amounts, and shall have the proposed method, equipment and material approved prior to placing concrete.

Inadequate curing and/or facilities therefor shall be cause for the Engineer to delay all concrete placement on the job until remedial action is taken.

All concrete shall be cured for a period of 4 curing days except as noted herein.

EXCEPTIONS TO 4-DAY CURING

Description	Required Curing
Upper Surfaces of Bridge Slabs and Top Slabs of Direct Traffic Culverts	8 curing days (Type I or III cement) 10 curing days (Type II cement)
Concrete Piling (non-prestressed)	6 curing days

When the air temperature is expected to drop below 40 F, the concrete shall be covered with polyethylene sheeting, burlap-polyethylene blankets, mats or other acceptable materials to provide the protection required by Article 420.12.

A curing day is defined as a calendar day when the temperature, taken in the shade away from artificial heat, is above 50 F for at least 19 hours, (or colder days if satisfactory provisions are made to maintain the temperature at all surfaces of the concrete above 40 F for the entire 24 hours). The required curing period shall begin when all concrete therein has attained its initial set.

The following methods are permitted for curing concrete subject to the restrictions of Table 1 and the following requirements for each method of curing.

(1) **Form Curing.** When forms are left in contact with the concrete, other curing methods will not be required except for cold weather protection.

(2) **Water Curing.** All exposed surfaces of the concrete shall be kept wet continuously for the required curing time. The water used for curing shall meet the requirements for concrete mixing water as specified in the Item, "Concrete for Structures". Sea water will not be permitted. Water which stains or leaves an unsightly residue shall not be used.

(a) **Wet Mat.** Polyethylene sheeting or burlap-polyethylene blankets placed in direct contact with the slab will be required when the air temperature is expected to drop below 40 F during the first 72 hours of the curing period. Wet mats placed in direct contact with the slab will be required when the air temperature is expected to remain above 40 F for the first 72 hours of the curing period. Damp burlap blankets made from nine ounce stock may be placed on the damp concrete surface for temporary protection prior to the application of the cotton mats which may be placed dry and wetted down after placement.

The mats shall be weighted down adequately to provide continuous contact with all concrete surfaces where possible. The surfaces of the concrete shall be kept wet for the required curing time. Surfaces which cannot be cured by contact shall be enclosed with mats, anchored positively to the

forms, or to the ground, so that outside air cannot enter the enclosure. Sufficient moisture shall be provided inside the enclosure to keep all surfaces of the concrete wet.

(b) **Water Spray.** This method shall consist of overlapping sprays or sprinklers, that keeps all unformed surfaces continuously wet.

(c) **Ponding.** This method requires the covering of the surfaces with a minimum of two inches of clean granular material, kept wet at all times, or a minimum of one-inch depth of water. Satisfactory provisions shall be made to provide a dam to retain the water or saturated sand.

(3) **Membrane Curing.** Unless otherwise provided herein or shown on the plans, either Type 1-D or Type 2 membrane curing compound may be used where permitted except that Type 1-D *(Resin Base Only)* will be required for bridge slabs and top slabs of direct traffic culverts.

STRUCTURE UNIT DESCRIPTION	REQUIRED		PERMITTED	
	Water for Complete Curing	Membrane for Interim Curing	Water for Complete Curing	Membrane for Complete Curing
1. Upper surfaces of Bridge Roadway, Median and Sidewalk Slabs, Top Slabs of Direct Traffic Culverts.	X	X (Resin Base)		
2. Top Surface of any Concrete Unit upon which Concrete is to be placed and bonded at a later interval (Stub Walls, Risers, etc.). Other Superstructure Concrete (Curbs, Wingwalls, Parapet Walls, etc.).	X			
3. Top Surface of Precast and/or Prestressed Piling.	X	X		
4. All Substructure Concrete, Culverts, Box Sewers, Inlets, Manholes, Retaining Walls, Riprap.			*X	*X

*Polyethylene Sheeting, Burlap-Polyethylene Mats or Laminated Mats in close intimate contact with the concrete surfaces, will be considered equivalent to water or membrane curing for Items under 4.

TABLE 1

For substructure concrete, only one Type of curing compound will be permitted on any one structure. Material requirements and construction methods shall be as required by the Item, "Membrane Curing", except as changed herein. Membrane shall be applied in a single, uniform coating at the rate of coverage recommended by the manufacturer and as approved by the Engineer, but not less than one gallon per 180 square feet of area. Tests for acceptance shall be at this specified rate.

Membrane curing shall not be applied to dry surfaces, but shall be applied just after free moisture has disappeared. Formed surfaces and surfaces which have been given a first rub shall be dampened and *shall be moist* at the time of application of the membrane.

When membrane is used for complete curing, the film shall remain unbroken for the minimum curing period specified. Membrane which is damaged shall be corrected immediately by reapplication of membrane. Unless otherwise noted herein or on the plans, the choice of membrane type shall be at the option of the Contractor, except that the Engineer may require the same curing method for like portions of a single structure.

420.22. **Removal of Forms and Falsework.** Except as herein provided, forms for vertical surfaces may be removed when the concrete has aged not less than one day when Type I or Type II cement is used, and not less than one-half day when Type III cement is used, provided it can be done without damage to the concrete.

Forms for inside curb faces may be removed in approximately three hours provided it can be done without damage to the curb.

Weight supporting forms and falsework for all bridge components and culvert slabs (except as noted herein), shall remain in place a minimum of 4 curing days after which they may be removed if the concrete has attained a flexural strength of 500 psi, as evidenced by strength tests using specimen made from the same concrete and cured under the same conditions as the portion of the structure involved. Forms for other structural components may be removed as specified by the Engineer.

Inside forms (walls and top slabs) for box culverts and sewers may be removed after the concrete has aged not less than one day (24 hrs.) and has acquired a flexural strength of not less than 300 psi, provided an overhead support system, approved by the Engineer, is used to transfer the weight of the top slab to the walls of the box culvert or sewer before the support provided by the forms is removed.

If all beams made for the purpose of form removal have been broken without attaining the required strength, forms shall remain in place for a total of 14 curing days.

The above provisions relative to form removal shall apply only to forms or parts thereof which are constructed to permit removal without disturbing forms or falsework required to be left in place for a longer period on other portions of the structure.

420.23. Defective Work. Any defective work discovered after the forms have been removed shall be repaired as soon as possible in accordance with Article 420.24.

If the surface of the concrete is bulged, uneven or shows excess honeycombing or form marks, which in the opinion of the Engineer, cannot be repaired satisfactorily, the entire section shall be removed and replaced at the expense of the Contractor.

420.24. Finishing Exposed Surfaces.

(1) Ordinary Surface Finish. An Ordinary Surface Finish shall be applied to all concrete surfaces either as a final finish or preparatory to a higher grade or class of finish. Higher grades and classes of finish shall be in accordance with the Item, "Surface Finishes for Concrete". Where neither a grade or class of finish is specified, an Ordinary Surface Finish, only, will be required.

Ordinary Surface Finish shall be provided as follows:

After form removal, all porous or honeycombed areas and spalled areas shall be corrected by chipping away all loose or broken material to sound concrete.

Feather edges shall be eliminated by cutting a face perpendicular to the surface. Shallow cavities shall be repaired using adhesive grout or epoxy grout. If judged repairable by the Engineer, large defective areas shall be corrected using concrete or other material approved by the Engineer.

Holes and spalls caused by removal of metal ties, etc., as required by Article 420.9 shall be cleaned and filled with adhesive grout or epoxy grout. Exposed parts of metal chairs on surfaces to be finished by rubbing, shall be chipped out to a depth of one-half inch and the surface repaired.

All fins, runs, drips or mortar shall be removed from surfaces which remain exposed. Form marks and chamfer edges shall be smoothed by grinding and/or dry rubbing.

Grease, oil, dirt, curing compound, etc., shall be removed from surfaces requiring a higher *grade* of finish. Discolorations resulting from spillage or splashing of asphalt, paint or other similar material shall be removed.

Repairs shall be dense, well bonded and properly cured, and when made on surfaces which remain exposed and do not require a higher finish, shall be finished to blend with the surrounding concrete.

Unless otherwise specified on the plans Ordinary Surface Finish shall be the final finish for the following exposed surfaces: inlets, manholes, sewer appurtenances, inside of culvert barrels, bottom of bridge decks between beams or girders, vertical and bottom surfaces of interior concrete beams or girders, except that form marks and chamfer edges will not require smoothing on the inside of culvert barrels and the bottom of bridge decks between beams or girders.

(2) **Special Surface Finishes.** Striated, exposed aggregate and other special surface finishes shall be in accordance with the Item, "Surface Finishes for Concrete" and/or with the requirements shown on the plans.

420.25. **Measurement and Payment.** No direct measurement or payment will be made for the work to be done or the equipment to be furnished under this item, but it shall be considered subsidiary to the particular items required by the plans and the contract.

ITEM 421

CONCRETE FOR STRUCTURES

421.1. **Description.** This item shall govern for the materials used; for the storing and handling of materials; and for the proportioning and mixing of concrete for bridges, culverts, prestressed concrete, and incidental concrete construction.

The concrete shall be composed of Portland cement, aggregates (fine and coarse), admixtures if desired or required, and water, proportioned and mixed as hereinafter provided. Accelerating admixtures will be used only on the express approval of the Engineer. Accelerating admixtures will not be permitted in bridge decks or direct traffic culvert slabs at any time, nor when Type II cement is specified.

421.2. **Materials.**

(1) **Cement.** The cement shall be either Type I, II or III Portland cement conforming to the Item, "Hydraulic Cement".

Either Type I or II cement may be used unless Type II is specified on the plans. Except when Type II is specified on the plans, Type III cement may be used when the anticipated air temperature for the succeeding 12

hours will not exceed 60 F. Type III cement may be used in all precast prestressed concrete except in piling when Type II cement is required for substructure concrete.

All cement used in a monolithic placement shall be of the same type.

(2) **Mixing Water.** Water for use in concrete and for curing shall be free from oils, acids, organic matter or other deleterious substances and shall not contain more than 1000 parts per million of chlorides as Cl nor more than 1000 parts per million of sulfates as SO_4.

Water from municipal supplies approved by the State Health Department will not require testing, but water from other sources will be sampled and tested before use in structural concrete. A sample of approximately one gallon will be submitted to the Materials and Tests Division, Camp Hubbard, 38th and Jackson St., Austin, Texas, 78703, for test and approval.

Tests shall be made in accordance with the "Standard Method of Test for Quality of Water to be used in Concrete" (AASHTO Method T 26), except where such methods are in conflict with provisions of this specification.

(3) **Coarse Aggregate.** Coarse aggregate shall consist of durable particles of gravel, crushed blast furnace slag, crushed stone, or combinations thereof; free from frozen material or injurious amounts of salt, alkali, vegetable matter, or other objectionable material either free or as an adherent coating; and its quality shall be reasonably uniform throughout. It shall not contain more than 0.25 percent by weight of clay lumps, nor more than 1.0 percent by weight of shale, nor more than 5 percent by weight of laminated and/or friable particles when tested in accordance with Test Method Tex-413-A. It shall have a wear of not more than 40 percent when tested in accordance with Test Method Tex-410-A.

Unless otherwise specified on the plans, coarse aggregate will be subjected to five cycles of both the sodium sulfate and the magnesium sulfate soundness test in accordance with Test Method Tex-411-A. When the loss is greater than 12 percent with sodium sulfate and/or 18 percent with magnesium sulfate, further testing will be required prior to acceptance or rejection of the material. A satisfactory record under similar conditions of service and exposure will be considered in the evaluation of material failing to meet these requirements.

Permissible sizes and gradations of aggregate shall be governed by Table 1, Table 4 and Table 5 except that when exposed aggregate surfaces are required, coarse aggregate gradation will be as specified on the plans.

When tested by approved methods, the coarse aggregate, including combinations of aggregates, when used, shall conform to the grading requirements shown in Table 1.

		Percent Retained on each Sieve								
Aggregate Grade No.	Nominal Size	2-1/2 in.	2 in.	1-1/2 in.	1 in.	3/4 in.	1/2 in.	3/8 in.	No. 4	No. 8
1	2½	0	0-20	15-50		60-80			95 100	
2 (467)*	1½		0	0-5		30-65		70-90	95-100	
3	1		0	0-5		10-40	40-75		95-100	
4 (57)*	1			0	0-5		40-75		90-100	95-100
5 (67)*	3/4				0	0-10		45-80	90-100	95-100
6 (7)*	1/2					0	0-10	30-60	85-100	
7	3/8						0	5-30	75-100	
8	No. 4						0	0-5	35-60	90-100

*Numbers in parenthesis indicate that these gradations conform to corresponding ASTM gradation from ASTM C 33.

Table 1
COARSE AGGREGATE GRADATION CHART

The aggregate shall be washed. The Loss by Decantation (Test Method Tex-406-A) plus the allowable weight of clay lumps, shall not exceed one percent, or the value shown on the plans, whichever is smaller. In the case of aggregates made primarily from the crushing of stone, if the material finer than the 200 sieve is definitely established to be the dust of fracture, essentially free from clay or shale, as established by Part III of Test Method Tex-406-A, the percent may be increased to 1.5.

(4) Fine Aggregate. Fine aggregate shall consist of clean, hard, durable and uncoated particles of natural or manufactured sand or a combination thereof, with or without a mineral filler. It shall be free from frozen material or injurious amounts of salt, alkali, vegetable matter or other objectionable material and it shall not contain more than 0.5 percent by weight of clay lumps. When subjected to the color test for organic impurities (Test Method Tex-408-A), it shall not show a color darker than standard.

The fine aggregate shall produce a mortar having a tensile strength equal to or greater than that of Ottawa sand mortar when tested in accordance with Test Method Tex-317-D.

Unless otherwise shown on the plans, the acid insoluble residue of fine aggregate used in slab concrete subject to direct traffic shall be not less than 28 percent by weight when tested in accordance with Test Method Tex-612-J.

When tested by approved methods, the fine aggregate or combinations of aggregates, including mineral filler, shall conform to the grading requirements shown in Table 2.

	Percent Retained on Each Sieve							
Aggregate Grade No.	3/8 in.	No. 4	No. 8	No. 16	No. 30	No. 50	No. 100	No. 200
1	0	0 to 5	0 to 20	15 to 50	35 to 75	65 to 90	90 to 100	97 to 100
2*	As approved by the Engineer.							

Where manufactured sand is used in lieu of natural sand, the percent retained on the No. 200 sieve shall be 94 to 100.

Where the sand equivalent value is greater than 85, the retainage on the No. 50 sieve may be 65 to 94 percent.

*Grade 2 aggregate may be used for all miscellaneous concrete, with prior approval of the Engineer.

Table 2
FINE AGGREGATE GRADATION CHART

Fine aggregate will be subjected to the Sand Equivalent Test (Test Method Tex-203-F). The sand equivalent shall not be less than 80 nor less than the value shown on the plans, whichever is greater.

For all classes of concrete, the fineness modulus as defined below for fine aggregates shall be between 2.30 and 3.10 for Grade 1 only.

The fineness modulus will be determined by adding the percentages by weight retained on the following sieves, and dividing by 100; Nos. 4, 8, 16, 30, 50 and 100.

(5) **Mineral Filler.** Mineral filler shall consist of stone dust, clean crushed sand, or other approved inert material.

(6) **Mortar (Grout).** Mortar for repair of concrete, shall consist of 1 part cement, 2 parts finely graded sand, and enough water to make the mixture plastic. When required to prevent color difference, white cement shall be added to produce the color required. When required by the Engineer, latex adhesive shall be added to the mortar.

(7) **Admixtures.** Calcium Chloride will not be permitted. Unless otherwise noted, air-entraining, retarding and water reducing admixtures may be used in all concrete and shall conform to the requirements of the Item, "Concrete Admixtures".

421.3. Storage of Cement. All cement shall be stored in well ventilated weatherproof buildings or approved bins, which will protect it from dampness or absorption of moisture. Storage facilities shall be ample, and each shipment of packaged cement shall be kept separated to provide easy access for identification and inspection.

The Engineer may permit small quantities of sacked cement to be stored in the open on a raised platform and under waterproof covering for a maximum of 48 hours.

421.4. Storage of Aggregates. The method of handling and storing concrete aggregates shall prevent contamination with foreign materials. If the aggregates are stored on the ground, the sites for the stock piles shall be clear of all vegetation and shall be level. The bottom 6 inch layer of aggregate shall not be disturbed or used without recleaning.

When conditions require the use of two or more sizes of aggregates, they shall be separated to prevent intermixing. Where space is limited, stock piles shall be separated by physical barriers.

Methods of handling aggregates during stockpiling and subsequent use shall be such that segregation will be minimized.

Unless otherwise authorized by the Engineer, all aggregate shall be stockpiled at least 24 hours to reduce the free moisture content.

421.5. Measurement of Materials. The measurement of materials, except water, used in batches of concrete shall be by weight except as noted below. Fine aggregate, coarse aggregate and mineral filler shall be weighed separately. Where bulk cement is used it shall be weighed separately but batch weighing of sacked cement will not be required. When sacked cement is used, the quantities of material per batch shall be based upon using full bags of cement. Batches involving the use of fractional bags will not be permitted.

Allowances shall be made for the water content in the aggregates.

When a mixer using volumetric batching of materials is used, an accurate method measuring by volume will be required.

421.6. Weighing and Measuring Equipment. Weighing and measuring equipment shall conform to the Item, "Weighing and Measuring Equipment".

421.7. Classification and Mix Design. It shall be the responsibility of the Contractor to furnish the mix design, using a Coarse Aggregate Factor acceptable to the Engineer, for the class(es) of concrete specified, to conform with the requirements contained herein and in accordance with SDHPT Bulletin C-11 and Supplement thereto. The Contractor shall perform, at his own expense, the work required to substantiate the design, except the testing of strength specimens, which will be done by the Department. Complete concrete design data shall be submitted to the Engineer for approval.

It shall also be the responsibility of the Contractor to determine and measure the batch quantity of each ingredient, including all water, not only for batch designs but for all concrete produced for the project, so that the mix conforms to these specifications and other requirements shown on the plans.

In lieu of the above mix design responsibility, the Contractor may accept a design furnished by the Engineer, however, this will not relieve him of the responsibility of providing concrete meeting the requirements of these specifications.

Trial batches will be made and tested using all the proposed ingredients prior to the placing of concrete, and when the aggregate, and/or type, brand or source of cement, or admixture is changed. When the brand and/or source of cement only is changed, the Engineer may waive trial batches only if a prior record of satisfactory performance of the cement has been established.

Trial batches shall be made in the mixer to be used on the job. When Transit Mix concrete is to be used, the trial designs will be made in a transit mixer representative of the mixers to be used. Batch size shall not be less than 50 percent of its rated mixing capacity.

Mix designs from previous or concurrent jobs may be used without trial batches if it is shown that no substantial change in any of the proposed ingredients has been made.

The coarse aggregate factor shall not be more than 0.82 except that when the voids in the coarse aggregate exceed 48 percent of the total dry loose volume, the coarse aggregate factor shall not exceed 0.85. The coarse aggregate factor shall not be less than 0.68 unless authorized by the Engineer in writing.

Water reducing or retarding agents may be used with all classes of concrete at the option of the Contractor, and will be required for hot weather concreting, for cased drilled shafts and for continuous slab placement.

When a retarding admixture is required for hot weather concreting, as specified in Article 420.13, the amount to be used will be as required in the Item, "Concrete Admixtures", subject to change by the Engineer when re-

quired. When used in continuous slab placement, the amount to be used will be established by several trial batches with varying retarder content and simulating the placing conditions to be encountered. When water reducing or retarding agents are used at the option of the Contractor, reduced dosage of the admixture will be permitted.

Entrained air will be required in accordance with Tables 4 and 5. The concrete shall be designed to entrain 5 percent air when Grade 1 or 2 coarse aggregate is used, 6 percent when Grade 3 or 4 coarse aggregate is used, and 7 percent for Grades 5, 6 or 7 unless otherwise specified by the Engineer. Concrete as placed in the structure shall contain the proper amount as required herein with a tolerance of plus or minus 1-1/2 percentage points. Occasional variations beyond this tolerance will not be cause for rejection. When the quantity of entrained air is found to be more than 3 percentage points over those values given herein, additional test beams or cylinders will be made. If these beams or cylinders pass the minimum flexural or compressive requirements, the concrete will not be rejected because of the variation in air content.

421.8. **Consistency.** The consistency of the concrete as placed should allow the completion of all finishing operations without the addition of water to the surface. When field conditions are such that additional moisture is needed for the final concrete surface finishing operation, the required water shall be applied to the surface by fog spray only, and shall be held to a minimum. The concrete shall be workable, cohesive, possess satisfactory finishing qualities, and of the stiffest consistency that can be placed and vibrated into a homogeneous mass. Excessive bleeding shall be avoided. Slump requirements will be as specified in Table 3.

Concrete Designation	Desired Slump	Max. Slump
Structural Concrete		
(1) Cased Drilled Shafts	5	6
(2) Slurry Placed Shafts	6	7
(3) Uncased Drilled Shafts, Thin-Walled Sections (9" or less)	4	5
(4) Slabs, Caps, Columns, Piers, Wall Sections Over 9", etc.	3	4
(5) Prestressed Concrete Members		
Class H	4	5
Class H-H	6	8
(6) Concrete Traffic Barrier		
(Cast-in-place or Precast)	4	5
(Slip-form)	1½	As designated by the Engineer
Concrete Placed Underwater	6	7
Riprap, Curb, Gutter and Other Miscellaneous Concrete	as specified by Engineer	

Note: No concrete will be permitted with slump in excess of the maximums shown.

Table 3

SLUMP REQUIREMENTS

421.9. Quality of Concrete. The concrete shall be uniform, workable and of a consistency acceptable to the Engineer. The cement content, maximum allowable water/cement ratio, the desired and maximum slump, the proper amount of entrained air and the strength requirements for all classes of concrete shall conform to the requirements of these specifications. It shall be the responsibility of the Contractor to provide concrete meeting these requirements.

During the progress of the work, the Engineer will cast test cylinders or beams, perform slump and entrained air tests and will make temperature checks, as required, to insure compliance with the specifications.

A strength test shall be defined as the average of the breaking strength of two cylinders or two beams as the case may be. Specimen will be tested in accordance with Test Methods Tex-418-A or Tex-420-A.

If the required strength or consistency of the class of concrete being produced cannot be secured with the minimum cement specified or without exceeding the maximum water/cement ratio, the Contractor will be required to furnish different aggregates, use a water reducing agent, an air-entraining agent or increase the cement content in order to provide concrete meeting these specifications.

All test specimens, beams or cylinders, representing tests for removal of forms and/or falsework shall be cured using the same methods, and under the same conditions as the concrete represented.

"Design Strength" beams and cylinders shall be cured in accordance with SDHPT Bulletin C-11 and Supplement thereto.

The Contractor shall provide and maintain curing facilities as described in SDHPT Bulletin C-11 and Supplement thereto, for the purpose of curing test specimens. Provision shall be made to maintain the water in the curing tank at temperatures between 70 F and 90 F.

When control of concrete quality is by twenty-eight day compressive tests, job control will be by seven day compressive tests which are shown to provide the required twenty-eight day strength, based on results from trial batches. Thereafter if the required seven day strength is not secured with the quantity of cement specified in Table 4 or 5, changes in the batch design will be made as specified in this article.

Class of Conc.	Sx.Cem. per C.Y. Min.	Min. Comp. Sgth. (f'_c) 28 Day psi	Min.Bm. Sgth. 7 Day psi	Max. Water Cement Ratio	Coarse Aggr. No.	General Usage
A	5.0	3000	500	6.5	1-2-3-4	Drilled Shafts, Bridge Substructure, Culverts (Not Direct Traffic), Inlets, Manholes, Headwalls Concrete Approach Slab, Curb & Gutter, Concrete Barrier Railing, Concrete Retards, Sidewalks, Driveways
B	4.0	2000	330	8.0	2-3-4-5-6-7	Riprap, Long Span Structures Thrust Beams
C	6.0	3600	600	6.0	1-2-3-4-5-*8	Drilled Shafts, Bridge Railing & Substructure, Culverts, Wingwalls Concrete Approach Slab, Concrete Barrier Railing, Machine Laid Curb
S	6.0	3600	600	5.0	2-3-4-5	Bridge Slab, Top Slab of Direct Traffic Culverts
D	3.0	1500	250	11.0	2-3-4-5-6-7	Riprap
H	6.0	As Specified on Plans	N.A.	5.5	3-4-5-6	Pre-Stressed Concrete Beams, Boxes and Piling Concrete Barrier Railing

Entrained air will be required for bridge slabs, top slabs of direct traffic culverts, piers, bents, precast piling (non-prestressed), drilled shafts placed in water, bridge railing and concrete barrier railing. When Class "H" concrete is used in barrier railing entrained air will not be required.

Grade 1 coarse aggregate will not be permitted in cased drilled shafts.

When Type II cement is used with Classes "C" or "S" concrete the 7 day beam break required will be 550 psi minimum and with Class "A", 460 psi minimum.

The use of Grade 7 aggregate must have prior approval of the Engineer.

*Grade 8 aggregate for use in machine laid curb.

Table 4
CLASSES OF REGULAR CONCRETE

Class of Conc.	Sx.Cem. per C.Y. Min.	Min. Comp. Sgth. (f'_c) 28 Day psi	Min.Bm. Sgth. 7 Day psi	Max. Water Cement Ratio	Coarse Aggr. No.	General Usage
C-C	7.0	5500 (7 Day - 4500)	900	4.2	2-3-4-5	Bridge Slab, Special High Strength Concrete, when a high-range water reducer is used.
E	6.0	3000	500	6.0	2-3-4-5	Seal Concrete
F	6.0 to 8.0	As Specified on Plans	$\frac{f'_c}{6}$	5.5	2-3-4-5	Rail-road Structures, Occasionally for Bridge Piers, Columns or Bents
H-H	6.0 to 8.0	As Specified on Plans	N.A.	4.5	3-4-5-6	Prestressed Concrete

Class C-C concrete may be used only when included in the contract, or permitted by Field Change. A high-range water reducing admixture will be required. Class H-H concrete may be used only when properly certified by the Materials and Tests Engineer.

When Class "H-H" concrete is used, entrained air will not be required.

Table 5
CLASSES OF SPECIAL CONCRETE

421.10. Mixing Conditions. The concrete shall be mixed in quantities required for immediate use. Any concrete which is not in place within the limits outlined in Article 420.11, shall not be used. Retempering of concrete will not be permitted.

In threatening weather, which may result in conditions that will adversely affect the quality of the concrete to be placed, the Engineer may order postponement of the work. Where work has been started and changes in weather conditions require protective measures, the Contractor shall furnish adequate shelter to protect the concrete against damage from rainfall, or from freezing temperatures as outlined in Article 420.12. If necessary to continue operations during rainfall, the Contractor shall also provide protective coverings for the material stock piles. Aggregate stock piles need be covered only to the extent necessary to control the moisture conditions in the aggregates to adequately control the consistency of the concrete.

421.11. Mixing and Mixing Equipment.

(1) **General.** All equipment, tools, and machinery used for hauling materials and performing any part of the work shall be maintained in such condition to insure completion of the work under way without excessive delays for repairs or replacement.

The mixing shall be done in a mixer of approved type and size that will produce uniform distribution of the material throughout the mass and shall be capable of producing concrete meeting the requirements of these specifications.

The mixer shall have a plate affixed showing the manufacturer's recommended operating data and it shall be operated within the speed and capacity limits stated thereon unless otherwise directed by the Engineer.

The absolute volume of the concrete batch shall not exceed the rated capacity of the mixer.

The mixing equipment shall be capable of producing sufficient concrete to provide the quantities required to comply with Article 420.11.

The entire contents of the drum shall be discharged before any materials are placed therein for the succeeding batch.

Improperly mixed concrete shall not be placed in the structure.

Mixers shall be subject to daily examination for changes in condition due to accumulations of hardened concrete and/or blade wear. Any hardened concrete shall be removed to the satisfaction of the Engineer before the mixer will be permitted for use. A copy of the Manufacturer's design, showing dimensions and arrangement of blades, shall be made available upon request of the Engineer. Worn blades shall be repaired or replaced with new ones when they have worn as much as 10% from their

original dimensions except that blade wear in truck mixers and agitators shall be in accordance with the Item, "Ready-Mix Plants".

Delivery of concrete to the site of the work and its discharge from the mixer, agitator, or non-agitating equipment shall be in accordance with the requirements of Article 420.11.

(2) **Batch Mixers.** The mixer may be batched by either the volumetric method or by weighing, and shall be equipped with a suitable timing device which shall lock the discharging mechanism and signal when the specified time of mixing has elapsed.

An adequate water supply and suitable metering devices shall be provided.

The first batch of concrete materials placed in the mixer for each placement shall contain an extra quantity of sand, cement, and water sufficient to coat the inside surface of the drum.

After all the required materials are in the mixer, the concrete shall be mixed not less than 50 seconds nor more than 90 seconds, measured from the time the last material enters the mixer to the time discharge of the concrete begins unless otherwise specified by the Engineer.

(3) **Proportioning and Mixing Equipment.** For all miscellaneous concrete placements, a mobile, continuous, volumetric mixer, or a volumetric or weight batch mixer, of the rotating paddle type may be used.

When approved by the Engineer in writing or when specified for use, these mixers may be used for other types of concrete construction, including structural concrete, if the number of mixers furnished will supply the amount of concrete required for the particular operation in question.

These mixers shall be designed to receive all the concrete ingredients, including admixtures, required by the mix design in a continuous uniform rate and mix them to the required consistency before discharging. They may be of the volumetric or weight batch design. The mixers shall have adequate water supply and metering devices.

For continuous volumetric mixers the materials delivered during a revolution of the driving mechanism, or in a selected time interval, will be considered a batch and the proportion of each ingredient will be calculated in the same manner as for a batch type plant.

The mixing time shall be in accordance with the recommendations of the manufacturer of the mixer; unless otherwise revised by the Engineer.

Calibration of these mixers will be required.

(4) **Ready-Mix Plants.** The use of ready-mixed concrete will be permitted for all structural concrete provided that the plant, truck mixers, agitators and mixing equipment conform to the requirements of the Item, "Ready-Mix Plants".

421.12. Placing, Curing and Finishing. The placing of concrete, including construction of forms and falsework, curing and finishing, shall be in accordance with the Item, "Concrete Structures", and the Item, "Surface Finishes for Concrete".

421.13. Measurement. The quantities of concrete of the various classifications which will constitute the completed and accepted structure or structures in place will be measured by the cubic yard, each, square foot, square yard, or linear foot as the case may be. Measurement will be as follows:

(1) **General.**

(a) All concrete quantities will be based on the dimensions shown on the plans or those established in writing by the Engineer. Diafram concrete, when required, will be included in the slab measurement.

(b) In determining quantities, no deductions will be made for chamfers less than two inches, embedded portions of structural steel or prestressed concrete beams, piling, anchor bolts, reinforcing steel, drains, weep holes, junction boxes, electrical conduit, conduit and/or voids for prestressed tendons or for embedded portions of light fixtures.

(c) For Pan Girder Spans, a quantity will be included for the screed setting required to provide proper camber in the roadway surface after form removal.

(d) For Slabs on Steel and Prestressed Beams, a quantity for the haunch between the slab and beams will be included when required. No measurement will be made during construction for variation in the amount of haunch concrete due to deviation from design camber in the beams.

(e) For Slabs on Panels or Tee-Beams, the combination of span length, theoretical camber in beams, computed deflections, and plan vertical curve will be taken into account in determining the quantity for the slab.

Additional concrete which may be required by an adjustment of the profile grade line during construction, to insure proper slab thickness, will not be measured for payment.

(f) Variation in concrete headwall quantity incurred when an alternate bid for pipe is permitted will not be measured for payment.

(g) Quantities revised by a change in design, measured as specified herein, will be increased or decreased, as the case may be, and included for payment.

(2) **Plan Quantity.** For those items measured for plan quantity payment, adequate calculations have been made in accordance with Article 9.1. If no adjustment is required by Article 421.14, additional measurements or calculations will not be required.

(3) **Measured in Place.** For those items not measured for plan quantity payment, measurement will be made in place.

421.14. **Payment.** For structure elements designated in Table 6, and when measured by the cubic yard, the quantity to be paid for will be that quantity shown on the contract plans and in the proposal, regardless of errors in calculation, except as may be modified by the following:

Plan quantities will be adjusted:

(1) When a complete structure element has been erroneously included or omitted from the plans, the quantity shown on the plans for that element will be added to or deducted from the plan quantity and included for payment. A complete structure element will be the smallest portion of a total structure for which a quantity is included on the plans. Quantities revised in this manner will not be subject to the provisions of Article 4.5.

(2) When the plan quantity for a complete structure element is in error by 5 percent or more, a recalculation will be made and the corrected quantity included for payment. Quantities revised in this manner will not be subject to the provisions of Article 4.5.

(3) When quantities are revised by a change in design the 'plan quantity' will be increased or decreased by the amount involved in the design change. Quantities revised in this manner will be subject to the provisions of Article 4.5.

The party to the contract requesting the adjustment shall present to the other, three copies of the description and location, together with calculations of the quantity for the structure element involved. When this quantity is certified correct by the Engineer, it will become the revised plan quantity.

Culverts and Wingwalls	Abutments
Headwalls for Pipe	Slab and Girder Spans
Retaining Walls	Slabs on Steel Spans
Inlets and Manholes	Slabs on Prestressed Spans
Slab Spans	Pan Girder Spans

Table 6
Plan Quantity Payment
(Cubic Yard Measurement Only)

Note: Other structure elements may be paid for as 'plan quantity', including pier and bent concrete, when so noted on the plans.

For those portions of structures not listed in Table 6, the concrete quantities, measured as provided in Subarticle 421.13.(1) will be paid for at the unit price bid per "Cubic Yard", per "Each", per "Square Foot", per "Square Yard", or per "Linear Foot", in place, for the various classifications of concrete shown.

Payment for increased or decreased costs due to a change in design, on those items measured as "Each", by the "Square Foot", "Square Yard" or "Linear Foot" will be determined by "Supplemental Agreement". Quantities revised in this manner will be subject to the provisions of Item 4.

The unit prices bid for the various classifications of concrete shown shall be full compensation for furnishing, hauling, and mixing all concrete material; placing, curing and finishing all concrete; all grouting and pointing; furnishing and placing drains; furnishing and placing metal flashing strips; furnishing and placing expansion joint material required by this item, and for all forms and falsework, labor, tools, equipment, and incidentals necessary to complete the work.

ITEM 422

REINFORCED CONCRETE SLAB

422.1. Description. This item shall govern the method of forming, the materials used, and the construction of a reinforced concrete bridge slab in accordance with the details shown on the plans. Unless otherwise noted on the plans, the Contractor shall have the option of constructing a cast-in-place slab using conventional forms; a cast-in-place slab using permanent metal deck forms; or a slab using prestressed precast concrete panels as a portion thereof.

422.2. Materials. All materials for concrete shall conform to the requirements of the Item, "Concrete for Structures".

Reinforcing steel shall conform to the requirements of the Item, "Reinforcing Steel", or "Coated Reinforcing Steel", when pertinent, and the details shown on the plans.

Materials for permanent metal deck forms shall conform to the requirements of the Item, "Permanent Metal Deck Forms".

Materials for prestressed precast concrete panels shall conform to the requirements of the Items, "Prestressed Concrete Structures" and "Prestressing".

Unless otherwise noted in the plans, all cast-in-place concrete shall be Class "S" conforming to the requirements of the Items, "Concrete Structures", and "Concrete for Structures".

422.3. Construction Methods. Unless otherwise shown on the plans any one or combination of the above forming systems may be used within the same span or structure.

Prior to the submission of shop drawings for beams, the Contractor shall notify the Engineer in writing as to the types of forming proposed for use, and the diafram options he proposes to use in the structure. This information is to be transmitted to the Bridge Division through the District Engineer.

Design and construction requirements of the plan details and of the Items, "Concrete Structures", "Permanent Metal Deck Forms", "Prestressed Concrete Structures", "Prestressing", "Reinforcing Steel", and/or "Coated Reinforcing Steel", whichever are pertinent, shall govern.

If the work involves the extending of existing slabs it shall be done in accordance with the Item, "Extending Concrete Structures".

When the method of forming chosen by the Contractor requires revised quantities of concrete and/or reinforcement and/or revision of elevations in order to make the system compatible with plan requirements, he shall submit proposed design details to the Engineer for approval prior to the erection of forms and placement of concrete.

When prestressed concrete panels are used, the profile gradeline and/or bearing seat elevations, may require adjustment to obtain minimum and/or maximum acceptable slab thickness due to variation in beam camber or other factors. The specified thickness of the cast-in-place slab may be reduced by not more than one-half of an inch over non-adjacent beams in a span, and by not more than one-fourth of an inch over adjacent beams in a span, or may be increased by not more than 2 inches at the center of the span.

When profile gradeline adjustment is necessary, it shall be adjusted over suitable increments, depending on span lengths, so that the revised gradeline will produce a uniform profile and good riding qualities. Actual beam camber in adjacent increments shall be considered when adjusting the gradeline of any given increment.

Where possible, the abutment backwall and wings and the riding surface of inverted "Tee" caps shall be placed after any adjustment of the profile gradeline is made.

422.4. Measurement. Reinforced concrete slab(s) placed under this item will be measured by the square foot of horizontal surface area using the nominal dimensions and configuration shown on the plans, transverse measurement being made out to out of slab (including raised median and/or sidewalk sections), with longitudinal measurement being made between ends of units or spans. Diafram and haunch concrete, reinforcement and optional steel diaframs, if used, will be considered as a portion of the slab. When required by the plans, concrete and reinforcement for sign mount brackets, luminaire brackets, and/or other concrete appurtenances will not be measured separately, but will be considered subsidiary to this item.

Structural steel, anchor bolts, armor joints, preformed joint seal, rail (including the concrete parapet portion), concrete median barrier and median barrier rail will be measured in accordance with the item under which they are furnished, and will not be subsidiary to this item.

For the quantities measured under this item adequate calculations have been made in accordance with Article 9.1. If no adjustment is required by Article 422.5., additional measurements or calculations will not be required.

The quantities of concrete and reinforcing steel shown in the plans are based on a conventionally formed slab. These quantities include amounts for concrete diaframs, brackets and other required attachments, and for haunch concrete when required, based on the profile grade, theoretical camber, and dead load deflection of the beams.

No additional measurement will be made for concrete or reinforcing steel due to a variation in camber of the beams from theoretical camber, or for additional quantities required by optional methods of forming.

422.5. Payment. The quantity for which payment is made will be that quantity shown on the contract plans and in the proposal, regardless of errors in calculation, except as may be modified by the following:

(1) Either party to the contract may request an adjustment of the quantities shown on the contract plans if the area of slab on any one structural unit is in error by 5 percent or more, or by the incorrect inclusion or omission of one or more complete slab units.

An adjustment may also be made upon request of either party if the quantity of concrete and/or quantity of reinforcing steel shown on the plans is in error by 5% or more, on any one structural unit, except when prestressed concrete panels are used. An adjustment for these quantities will be made in accordance with Article 4.4, "Extra Work".

The party to the contract requesting the adjustment shall present to the other, three copies of the description and location, together with calculations of the quantity for the structure involved. When this quantity is certified correct by the Engineer, it will become the revised plan quantity. Quantities revised in this manner will not be subject to the provisions of Article 4.5.

(2) When the slab area only is revised by a change in design, the plan quantity will be increased or decreased by the amount involved in the design change. If design changes affect the thickness of the slab or the quantity of reinforcement, the revised quantity will be paid for in accordance with Article 4.4 "Extra Work". Quantities revised in this manner will be subject to the provisions of Article 4.5.

The unit price bid per square foot for "Reinforced Concrete Slab", shall be full compensation for furnishing, hauling, mixing, placing, curing and finishing of concrete; furnishing and placing all reinforcing steel; including coated reinforcing steel, when pertinent; all grouting and pointing; furnishing and placing drains and expansion joint material except where specifically furnished under another item; furnishing and placing metal flashing strips; for all forms (removable and/or permanent) and all falsework; for prestressed precast panels; for furnishing and placing concrete and reinforcement for sign mount and/or luminaire brackets and/or other concrete appurtenances when required; for removing designated portions of existing slab; cleaning, bending and cutting exposed existing reinforcing steel and welding of reinforcing steel when required; cleaning and painting old concrete with neat cement paste; and for all labor, tools, equipment, and incidentals necessary to complete the work.

ITEM 423

RETAINING WALL

423.1 Description. This item shall govern for furnishing the materials for, and for constructing retaining walls as required by the plans and by this item. Reinforced concrete retaining walls shall consist of reinforced concrete footings, with or without piling or drilled shafts, and reinforced concrete walls as required by the plans. When optional or alternate design details and specifications are included in the plans, the Contractor will have the option of constructing any of the types of retaining wall which is included.

423.2 Materials. Concrete and reinforcing steel required for reinforced concrete retaining walls shall be in accordance with the Items, "Concrete Structures", "Concrete for Structures" and "Reinforcing Steel". Materials for waterproofing shall be of the type shown on the plans and shall conform to the material requirements of the Item, "Waterproofing". Filter material and drain pipe shall conform to the material requirements of the Item, "Pipe Underdrains" and to the requirements shown on the plans. The material for optional or alternate designs shall be in accordance with the specifications included in the contract for the particular option or alternate chosen.

423.3 Construction Methods. Any required excavation and backfill shall be done in accordance with the Item, "Structural Excavation". Any required piling or drilled shafts shall be in accordance with the pertinent piling specification required for the type specified and/or the Item, "Drilled Shaft Foundations". Any required waterproofing shall be installed in accordance with the Item, "Waterproofing" and the plan details. Any required filter material and drain pipe shall be installed in accordance with the Item, "Pipe Underdrains" and the plan details.

Where required on the plans, temporary shoring may be either soldier shafts (drilled shafts) or piling, unless specifically stated in the plans. Soldier shafts will be in accordance with the Item, "Drilled Shaft Foundations". Soldier piling will be in accordance with the pertinent piling specification.

Construction methods for optional or alternate designs shall be in accordance with the pertinent specification included in the contract for the optional or alternate design selected. Temporary shoring for optional or alternate designs may vary from that shown in the plans for cast-in-place walls, depending on the option or alternate design used.

423.4 Measurement. Retaining Walls will be measured by the square foot of the front surface area of the wall between the top of foundation and the top of wall including any coping required.

When an optional or alternate design retaining wall is constructed, measurement will be by the plan quantity for the type of wall shown in the plans and proposal as the base bid. Where the base bid allows for the selection of one of several available design options, measurement will be the plan quantity shown in the contract plans.

No measurement will be made of any foundations required, excluding piling or drilled shafts, but will be subsidiary to this item.

Measurement of piling or drilled shafts, where used for foundations, if required, will be made in accordance with the item under which they are bid.

No measurement will be made of piling or drilled shafts, where used as soldier shafts for temporary shoring, but will be subsidiary to this item.

Measurement of filter material, drain pipe and/or waterproofing included in the retaining wall area, will not be made, but will be subsidiary to this item.

For the quantities measured under this item adequate calculations have been made in accordance with Article 9.1. If no adjustment is required by Article 423.5., additional measurement or calculations will not be made.

The quantities of concrete and reinforcing steel shown in the plans are estimates, and may or may not represent the actual amount or quantity to be placed in the retaining walls, and unless otherwise noted are based on a reinforced concrete retaining wall.

No measurement will be made for structural excavation, but will be subsidiary to this item.

423.5. **Payment.** Payment will be made at the unit price bid per square foot for "Retaining Wall", of the Type, Special Surface Finish, and/or Design Designation, as the case may be, in accordance with the plans.

The quantity for which payment is made will be that quantity shown on the contract plans and in the proposal, regardless of errors in calculation, except as may be modified by the following:

(1) Either party to the contract may request an adjustment of the quantities shown on the contract plans if the area of a single retaining wall is in error by 5 percent or more, or by the incorrect inclusion or omission of one or more complete wall units.

An adjustment may also be made upon request of either party if the quantity of concrete and/or quantity of reinforcing steel shown on the plans is in error by 5 percent or more on a single retaining wall. An adjustment of these quantities will be made in accordance with Article 4.4, "Extra Work".

The party to the contract requesting the adjustment shall present to the other, two copies of the description and location, together with calculations of the quantity for the structure involved. When this quantity is certified correct by the Engineer, it will become the revised plan quantity. Quantities revised in this manner will not be subject to the provisions of Article 4.5.

(2) When the wall area only is revised by a change in design, the plan quantity will be increased or decreased by the amount involved in the design change. If design changes affect the thickness of the wall or the quantity of reinforcement, the revised quantity will be paid for in accordance with Article 4.4, "Extra Work". Quantities revised in this manner will be subject to the provisions of Article 4.5.

This price shall be full compensation for all excavation; for furnishing and placing all temporary shoring, including soldier shafts or piling; furnishing and placing all reinforcing steel including foundations and copings, when required; furnishing, hauling and mixing all concrete materials; placing, curing and finishing all concrete including foundations and copings, when required; for all grouting and pointing; furnishing, placing and compacting regular gravel or select granular backfill; furnishing and placing waterproofing material; for furnishing filter material and drain pipe, when required; furnishing and placing expansion joint material, when required; for furnishing and placing water stop, when required; fabricating, curing and finishing all panels; furnishing and placing tie strips, anchorage systems, fasteners, joint fillers and incidentals; for wall erection; and for all labor, tools, equipment and incidentals necessary for a complete retaining wall.

ITEM 425

PRESTRESSED CONCRETE STRUCTURES

425.1. **Description.** This item shall govern for the construction and erection of precast prestressed concrete members, in accordance with the plans, with approved shop and/or working drawings and with these specifications.

425.2. **General.** Prior to the beginning of casting, the Contractor shall give the Engineer ample notice as to the location of the casting site and the date on which the work will begin.

An Inspection Laboratory shall be furnished in accordance with the Item, "Plant Inspection Laboratory (Equipped)".

The Contractor shall submit to the Engineer, a proposed sequence of erection by structure and span or unit number, with the approximate date that the members are to be erected. Shop plans shall be submitted following this proposed sequence.

When alternate designs are permitted by the contract plans, the designs proposed shall be submitted in the format and on forms furnished by the Department. Approval of these designs must be given prior to preparation of Shop Drawings. Once alternate designs are submitted and approved, subsequent changes will not be permitted.

Clear and legible shop plans shall be prepared on sheets 22 x 36 inches. The margin at the left end shall be 1-1/2 inches wide and the others one-half inch wide. Each sheet shall have a title in the lower right-hand corner. The title shall include the sheet index data shown on the lower right-hand corner of the project plans, sheet numbering for the shop plans, name of structure, name of Fabricator and name of Contractor.

Preparation and submission of drawings may be on 11 x 18 inch sheets, or full size drawings may be reduced to half-scale size, if they are completely clear and legible.

All shop plans shall be checked by the Fabricator before submitting them for approval. Submission of shop plans shall be in accordance with the following:

Six copies of the Index Sheet, Bearing Sheet and Fabrication Sheet, and seven copies of Erection Plans will be required except that one additional copy of each will be required for railroad underpass structures. Additional sets may be required by note on the plans.

When fabrication is to be at more than one casting plant, two additional sets of Shop Plans will be required for each additional casting location. Index sheets shall reflect the plant locations where each member is to be fabricated.

After completion of fabrication a corrected set of final 'as built' drawings shall be submitted for inclusion in the final contract plans. In addition when a railroad underpass structure(s) is constructed under this item, the Contractor shall furnish reproducible tracings of the approved 'as built' shop drawings for the railroad underpass(es) only for submission to the Railroad.

Submission of all Shop Plans shall be to the Bridge Engineer, State Department of Highways and Public Transportation, 11th and Brazos Streets, Austin, Texas 78701.

A Casting Schedule shall be prepared on standard forms and submitted to the Materials and Tests Engineer, or his duly authorized representative, prior to stressing.

Prior to the casting of members, detailed drawings reflecting the complete facilities to be used in fabrication shall be required. For central plant fabrication, three copies shall be submitted to the Materials and Tests Engineer, Camp Hubbard, 38th and Jackson Streets, Austin, Texas 78703. For job site fabrication, three copies shall be submitted to the Bridge Engineer.

The design of casting beds and facilities for pretensioned construction, including Plans and Specifications shall be done by a Professional Engineer registered in the State of Texas, and shall bear his seal. The Contractor (Fabricator) shall furnish a certificate bearing his signature, or that of a responsible Officer of the Company, that the bed, facilities and hardware have been constructed in accordance with the above plans and specifications.

The Contractor (Fabricator) shall specify the maximum loading for which the bed is to be used. Prior to approval for that loading, the facilities

shall be proofloaded to a minimum ten percent overload for eight hours. Additional proof loads shall be performed every 12 months at a ten percent overload for four hours, if deemed necessary by the Engineer. Minor changes in facilities will not require proofloading but will require submission of the details of changes accompanied with design calculations.

Shop plans and/or working drawings for precast post-tensioned members will be in accordance with Article 426.5.

Erection plans and final shop plans will be required in accordance with this Item.

425.3. Materials. Materials required for use under this Item shall conform to the following:

Concrete	Item 421
Prestressing	Item 426
Reinforcing Steel (Non-prestressed)	Item 440
Structural Steel	Items 441, 442
Elastomeric Materials	Item 435
Epoxy Materials	Item 575

425.4. Construction Methods. Prestressing shall be in accordance with the Item, "Prestressing".

Reinforcing steel shall be fabricated and placed in accordance with the plans and as required herein.

Post tensioning ducts, when required, shall be checked and cleaned of all obstructions and placed in accordance with the approved prestressing details, and in accordance with the Item, "Prestressing". Immediately after concrete placement they shall be cleaned of any concrete, mortar or grout leakage which might clog the duct.

The construction of forms and the placing, curing and finishing of concrete shall be in accordance with the provisions contained herein and requirements of the plans.

(1) **Forms.** All side and bottom forms for precast prestressed concrete construction shall be constructed of steel, unless otherwise noted on the plans. End headers and inside forms may be of other material as approved on the shop drawings.

Forms shall be of sufficient thickness, with adequate external bracing and stiffeners, and shall be sufficiently anchored to withstand the forces due to placement and vibration of concrete. Internal bracing and holding devices in forms will not be permitted if such would remain in the finished prestressed member. Joints shall be maintained reasonably mortar tight.

The grade and alignment of forms shall be checked each time they are set and shall be maintained during the casting of concrete.

Metal forms shall be reasonably free from rust, grease or other foreign materials. All forms shall be cleaned thoroughly prior to each casting operation.

Wood forms, when permitted, shall conform to the requirments of Article 420.9.

Materials used for forming internal voids in piling or prestressed boxes shall be inert, non-absorptive and be of adequate strength to maintain sufficient rigidity to withstand the forces of flow, vibration, buoyancy and weight of the plastic concrete during placing.

The soffit for casting members shall be constructed and maintained to provide not more than one-fourth inch variation in any 50 foot length of the bed from the theoretical plane of the bottom of the member.

Forms for internal voids in members shall be anchored securely to prevent movement or misalignment during the placing of concrete. For forming internal voids with a mandrel, special attention shall be given to maintaining the correct position and alignment of the mandrel throughout the casting operation.

The facing of all forms shall be treated with form oil or other bond breaking coating prior to placing of concrete. The oil or other materials used for this purpose shall be of a consistency and composition to facilitate form removal. Materials which appreciably stain or react with the concrete will not be permitted.

All forms shall be constructed to facilitate removal without damage to the concrete. At the Contractor's option, side forms for piling and panels may be constructed with a one-eighth inch draft to permit ease of removal.

(2) **Placing Concrete.** All concrete shall be placed during daylight hours unless the fabrication plant or site is provided with an approved lighting system.

The method of concrete placement shall avoid segregation of the aggregate or displacement of the reinforcing steel, prestressing steel or conduit. Concrete shall be deposited as near as possible in its final position in the forms. Depositing large quantities of concrete at one location in the forms and running or working it along the forms will not be permitted.

Special attention shall be directed toward working the coarse aggregate back from the face of the concrete and to forcing the concrete under and around the reinforcing steel, prestressing steel or conduit.

Placement of concrete in large members shall be subject to approval of the Engineer. Concrete may be placed in beams and girders in one lift or in multiple continuous horizontal layers. In the latter case the thickness of the first layer shall be slightly above the juncture of the bottom flange and web. Not more than one hour shall elapse between the placing of the suc-

cessive layers. Vibration of subsequent layers of concrete shall extend into the previously placed layers as specified in Subarticle 425.4.(3).

When casting concrete piling or concrete slab units, the concrete shall be placed in one continuous horizontal layer.

Concrete placement will not be permitted when impending weather conditions will impair the quality of the finished work. If rainfall should occur after placing operations are started, the Contractor shall provide ample covering to protect the work. In case of a drop in temperature the provisions set forth in 425.4.(2)(a) Placing Concrete in Cold Weather shall be applied.

(a) **Placing Concrete in Cold Weather.** When members are produced in a fabricating plant which has adequate provisions to protect the concrete when placed and which has approved elevated temperature curing facilities, concrete may be placed under any low temperature conditions provided:

The temperature of the concrete is not less than 50 F nor more than 85 F when placed in the forms.

The framework and covering are in place and heat is provided for the concrete and forms within one hour after the concrete is placed. This shall not be construed to be one hour after the last concrete is placed but that no concrete shall remain unprotected and unheated for longer than one hour.

The air surrounding the concrete shall be kept between 50 F and 85 F for a minimum of three hours prior to beginning the temperature rise which is required for elevated temperature curing. The temperature of the concrete shall not be less than 50 F at any time after all materials are added and mixing commences.

For central fabricating plants or job site casting operations which do not provide facilities necessary to accomplish the above provisions, concrete may be placed when the atmospheric temperature is 35 F or greater. The temperature of the concrete at the time of placement shall not be less than 50 F nor more than 85 F. The concrete shall not be placed in contact with any material having a temperature less than 32 F or any material coated with frost.

Aggregates shall be free from ice, frost and frozen lumps. When required, in order to produce the minimum temperature specified above, the aggregate and/or the water shall be heated uniformly in accordance with the following:

Water shall be heated to a temperature not to exceed 180 F and/or the aggregate shall be heated to a temperature not to exceed 150 F. The equipment furnished shall be capable of heating the aggregate uniformly to eliminate overheated areas in the stockpile which might

cause flash set of the cement. The temperature of the mixture of the aggregates and water shall be between 50 F and 85 F before introduction of the cement.

Protection shall be provided to maintain the temperature of the concrete at all surfaces above 50 F until release strength is reached. Protection shall consist of providing additonal covering and, if necessary, supplementing such covering with artificial heating. When weather conditions indicate the possibility of the need for such temperature protection, all necessary heating equipment and covering material shall be on hand ready for use before permission is granted by the Engineer to begin placement of concrete.

(b) Placing Concrete in Hot Weather. When concrete is to be placed during hot weather, it shall be placed without the addition of more water to the concrete than required by the design (slump and consistency), and it shall be finished properly without adding water to the surface. Control of the initial set of the concrete and lengthening the time for finishing operations, under adverse wind, humidity and hot weather conditions, may be accomplished with the use of an approved retarder in accordance with Article 421.7.

The *maximum* time interval between the addition of mixing water and/or cement to the batch, and the placing of concrete in the forms shall not exceed the following:

Air or Concrete Temperature (Whichever is Higher)	Maximum Time (Addition of Water or Cement to Placing in Forms)
Non-Agitated Concrete	
Over 80 F	15 Minutes
50 F to 79 F	30 Minutes
Agitated Concrete	
90 F or Above	45 Minutes
75 F to 89 F	60 Minutes
50 F to 74 F	90 Minutes

The use of an approved retarder in the concrete will permit the extension of each of the above temperature time maximum by 30 minutes, except that for non-agitated concrete, the maximum time shall not exceed 30 minutes.

Under conditions of extreme temperature, wind or humidity, when the specified temperature-time maximums are excessive, the Engineer may require the use of an approved retarder, or may suspend concrete placing operations, if quality concrete is not being placed.

The values which govern for minimum concrete strengths during different phases of construction shall be as shown on approved shop drawings.

For Classes "H" and "HH" Concrete, the control of the concrete shall be by compressive tests of cylinders. An adequate number of cylinders will be made for each pertinent strength test required. Tests for determining "Release Strength" and/or "Handling Strength" of members, will be the average of the breaking strength of two cylinders.

All test specimens, beams or cylinders representing tests for removal of forms and/or falsework and for "Release Strength" shall be cured under the same conditions, be subjected to the same curing materials and to the same weather conditions as the concrete represented.

"Design Strength" cylinders for acceptance of members shall be cured with the member which the cylinders represent until release of stress or until partial tensioning strength is obtained. These cylinders shall then be cured for the remainder of the test period in accordance with Test Method Tex-704-I.

(3) **Vibration of Concrete.** All concrete shall be thoroughly compacted with approved high frequency vibrators operating at a minimum of 7000 vibrations per minute. When the forms are of steel, either external or internal vibrators or a combination of both may be used except that internal vibrators will be required, supplemented by external vibration if desired, for prestressed concrete beams and prestressed concrete box beams.

At least one stand-by vibrator of the type(s) being used shall be provided for emergency use.

Internal vibrators shall be inserted systematically into the concrete immediately after deposit. When the concrete is placed in more than one layer, the vibrators shall be operated so that they will penetrate the previously placed layer of concrete.

The size and spacing of external vibrators shall provide sufficient intensity of vibration to the desired area of form. The spacing, frequency and/or amplitude of external vibrators shall be varied to produce uniform consolidation of the concrete.

Supplemental vibrators or a modification of the vibration system shall be provided when it is deemed necessary by the Engineer to accomplish thorough compaction of the concrete and complete embedment of the reinforcing steel and prestressed tendons.

(4) **Finishing of Concrete.** Top surfaces of prestressed concrete beams, against which cast-in-place concrete will be placed later shall be screeded or rough floated to bring grout to the surface and cover all aggregate. At the approximate time of initial set, the surface shall be roughened by brushing, brooming or other approved methods. Sound concrete shall not be removed

or aggregate loosened. Concrete shall be removed from exposed reinforcing steel prior to shipment.

The top surfaces of beams upon which panels are to be placed shall be finished relatively smooth with a metal trowel, from the reinforcing bar (R-bar) out to the outside edges. The center portion of these beams shall be roughened

When the plans require that a concrete overlay be placed on prestressed concrete box members, the top slab of the box shall be given a metal tine finish having an average texture depth of approximately 0.050 inches.

When the plans require that an asphaltic seal and overlay be placed on prestressed concrete box beams or for an additional slab to be placed on prestressed concrete panels, the top slab of the box, and the top surface of prestressed panels shall be given a lightly textured broom finish, similar to a sidewalk finish with the depth of striations not exceeding approximately1/16 inch.

Erection holes (lifting eyes, form anchors, etc.) in exterior beams shall be filled with mortar and made flush with the surrounding surface. Holes in interior beams need not be filled unless steel is exposed. Erection or fabrication hole in the bottom of all beams shall be filled with non-stain, non-shrink mortar and made flush with the surrounding surface.

Form marks in excess of that permitted in Article 425.7., and all fins and rough edges along chamfer lines shall be removed in an acceptable manner.

Unless otherwise shown on the plans, strands shall be removed flush with the end of the member, or recessed approximately three-eighths of an inch. In either case, the ends of the strands and a minimum of one inch around each strand shall be cleaned and coated with approximately 10 mils of an approved epoxy or epoxy grout.

After slab placement, the outside and bottom surfaces of exterior beams or members shall be given the grade of surface finish specified for the structure. Other members shall be given the grade or class of finish required by the plans.

(5) **Curing of Concrete.** Careful attention shall be given to the proper curing of concrete. The Contractor shall inform the Engineer regarding the methods and procedures proposed for curing; shall provide the proper equipment and necessary materials; and shall have approval of the Engineer of such methods, equipment and materials prior to placing concrete.

Inadequate curing facilities or lack of attention to the proper curing of concrete shall be cause for the Engineer to stop all concrete placement until approved curing is provided. Inadequate curing may be cause for rejection of the member.

Side forms may be removed at the discretion of the Contractor at any time after the concrete has reached sufficient strength to prevent physical damage to the member. Weight supporting forms shall remain in place until the concrete has reached the "Handling Strength" shown on the plans. Removal of the forms shall be done in such a manner that curing is not interrupted on any member by more than 30 minutes.

All concrete shall be cured with elevated temperature or water. An approved water or membrane cure (when permitted) shall be used as an interim measure prior to elevated temperature or other methods of curing. Type I-D interim membrane curing will be permitted only on the top surface of concrete piling.

Curing shall be commenced prior to the formation of surface shrinkage cracks. The mats, sheets, or blankets shall not be placed in contact with the prestressed concrete member until such time that damage will not occur to the surfaces.

Concrete shall be cured continuously, except as provided for form removal, until the concrete strength as indicated by compressive test of cylinders cured with the members, has reached the "Release Strength" or "Handling Strength" designated on the plans and/or shop drawings. Piling and roadway surfaces of prestressed concrete box beams shall be water cured an additional three days with the temperature of the concrete maintained above 32 F for this period.

A period not to exceed four hours will be permitted for removal to a storage area prior to resuming the balance of water curing for piling and box beams.

(a) **Water Curing.** All exposed surfaces of the concrete shall be kept wet continuously for the required curing time. The water used for curing shall meet the requirements for concrete mixing water as specified in the Item, "Concrete for Structures". Sea water will not be permitted. Water which stains or leaves an unsightly residue shall not be used.

Water curing will be permitted as follows:

1. **Wet Mat Method.** For water curing by the wet mat method, cotton mats, polyethylene sheeting, or polyethylene burlap blankets may be used.

The mats, sheets, or blankets shall be adequately anchored and weighted to provide continuous contact with all concrete surfaces. Any concrete surfaces which cannot be cured by contact shall be enclosed by mats, adequately anchored, so that outside air cannot enter the enclosure. Sufficient moisture shall be provided inside the enclosure to keep all of the surfaces of the concrete wet for the required curing time.

2. **Water Spray Method.** For water curing by the water spray method, overlapping sprays or sprinklers shall be used so that all concrete surfaces are kept wet continuously.

(b) **Elevated Temperature Curing.** Curing by elevated temperatures will be permitted as follows:

1. **Steam Curing.** (Steam curing is defined as use of steam above 85 F). When steam curing of concrete is provided, the temperature inside the curing jacket shall not exceed 165 F for more than one hour during the entire steam curing period. Concrete exposed to temperatures exceeding 180 F will not be accepted.

Sufficient moisture shall be provided inside the curing jacket so that all surfaces of the concrete are wet.

An unobstructed air space of not less than six inches shall be provided between all surfaces of the concrete and the curing jacket. Steam outlets shall be positioned so that live steam is not applied directly on the concrete, reinforcing steel or tendons.

The location of steam lines, location of control points for discharge of steam into the curing jacket, and the number and type of openings for steam distribution within the curing jacket shall be arranged so that temperature variation between any points in the enclosure shall not exceed 20 F.

Steam curing shall not commence until the concrete has been in place a minimum of three hours, or until initial set of the concrete, as determined in accordance with ASTM C 403, is attained.

During the application of steam the temperature inside the curing jacket shall be raised uniformly at a rate not to exceed 40 F per hour.

2. **Alternate Methods.** Other methods of elevated temperature curing may be permitted by the Engineer provided temperature maximums, rate of temperature variation, humidity control, etc., are in accordance with the requirements for steam curing. Permission shall be obtained from the Engineer, in writing, for use of any alternate method.

425.5. **Handling, Hauling and Erection.** The Contractor (Fabricator) shall be responsible for proper handling, lifting, storing, hauling and erection of all members so that they may be placed in the structure without damage.

Unless approved on erection and/or shop drawings, prestressed members shall be maintained in an upright position at all times and shall be picked up and supported near the ends of the member in such a way to prevent torsion. Members may be lifted with the lifting devices as approved on the shop plans or by other methods approved by the Engineer in writing.

No member shall be moved from the casting yard until all requirements for tensioning (when pertinent), curing and strength requirements have been attained.

Prior to shipping to the jobsite, all beams, box beams, panels, piling and other prestressed members shall be marked for identification, as shown on approved shop drawings, with other project identification as required by the Engineer.

Storing of prestressed members shall be done with adequate blocking so that warpage or cracking will not occur. The blocking shall be of such nature that uneven settlement due to wet ground or inadequate material underneath the blocking will not occur. Members which are improperly stored and which become cracked, warped or otherwise damaged in storage will be subject to rejection. Concrete box beams shall be supported by the solid end block area during handling, storage, hauling and erection.

All concrete beams or girders, placed over a traveled roadway or railroad, shall be securely tied and/or braced to prevent overturning until diaframs capable of providing lateral stability are permanently in place. When railroad or roadway traffic must be maintained beneath girders or beams already placed, traffic shall be protected against falling objects during the erection of diaframs and other structural members, during the placing of cast-in-place concrete and during the erection and dismantling of forms therefor. The protection shall consist of safety nets (1 inch mesh maximum) or a flooring with openings not larger than 1 inch.

425.6. Defects and Breakage. Failure of individual wires in a seven-wire strand, or of wires in a parallel wire tendon is acceptable provided the total area of wire failure is not more than two percent of the total cross-sectional area of tendons in any member. Failure of entire strand will be subject to structural review.

Fine hair cracks or checks on the surface of the member which, as determined by the Engineer, do not extend to the plane of the nearest reinforcement will not be cause for rejection unless they are numerous and extensive. Diagonal cracks, which indicate damage from torsion, will be subject to a structural review prior to acceptance. Vertical or horizontal cracks, which are one-sixteenth inch or less in width and which tend to close upon transfer of stress to the concrete, are acceptable. Cracks in excess of this are subject to review prior to acceptance.

Cracks which extend into the plane of the reinforcing steel and/or prestressed tendons, but are acceptable otherwise, shall be repaired by sealing with an approved epoxy.

Small damaged or honeycombed areas which are purely surface in nature, (not over one inch deep) may be repaired with an approved epoxy grout. Damage or honeycomb in excess of this will be tentatively rejected, but will be subject to structural review.

For prestressed concrete box beams only, areas requiring repair work, except as noted herein, which will be covered by cast-in-place concrete (shear keys and end diaframs) shall be explored and evaluated but, if structurally adequate, will not require repair at the plant. Areas of honeycomb which expose strands (except for the end of the box) will require evaluation and repair at the plant.

Any of the following conditions will be cause for rejection of prestressed panels.

1. Any crack that comes within one inch of two adjacent strands.

2. Corner cracks or breaks that involve two strands.

3. Isolated damage or honeycomb larger than approximately 6" in diameter or length that involves more than one strand.

4. Narrow honeycomb lines caused by grout leakage over 1/2" in depth involving more than one strand.

Any condition not covered by the above shall be subject to structural review.

425.7. Workmanship and Tolerance.

Reinforcing steel shall not project above the top of the member more than one-half of an inch or less than three-fourths of an inch from plan dimension. In the plane of the steel parallel to the nearest surface of concrete, bars shall not vary from plan placement by more than one-fourth of an inch, or one-twelfth of the spacing between bars, whichever is greater. In the plane of the steel perpendicular to the nearest surface of concrete, bars shall not vary from plan placement by more than one-fourth of an inch.

Allowable tolerances for the dimensions and configuration shown on the approved shop drawings shall be as shown in Table I.

		Beams	Boxes	Tees	Panels
Length (Normal to strands for panels)		±3/4"	*±1"	±3/4"	±1/2"
Width (Parallel to strands for panels)		+3/4"-1/4"	±1/4"	±3/4"	±1/2"
Depth Nominal (Thickness in case of panels)		+1/2"-1/4"	±1/4"	±1/4"	+1/4"-1/8"
Thickness	Top Slab or Flange	+1/2"-1/4"	±1/2"	±1/4"	NA
	Bottom Slab or Flange	+1/2"-1/4"	±1/2"	+1/2"-1/4"	NA
	Web or Wall	+3/4"-1/4"	±1/2"	±1/4"	NA
Horizontal Alignment-Upon Release of Stress Deviation from straightness of mating edge of panels		±1/8" per 10' of Length	±1/4"	±1/4"	±1/8"
Deviation of Ends from Shop Plan Dimension	Horizontal Skew	1/4"	1/4" per 1' of width	1/8" per 1' of width	NA
	Vertical Batter	±1/8" per 1 of depth	1/4" per 1' of height	±1/8" per 1' of depth	NA
Deviation of bearing edge of panel from designated skew (out of square)		NA	NA	NA	±1/2"
Bearing Surfaces	Perpendicular to Vertical Axis	±1/8"	NA	±1/16"	NA
	Deviation from Plane	±1/16"	±1/8"	±1/16"	NA
Anchor Hole Location	From End of Member	+3/4"-1/4"	±1/4"	+3/4"-1/4"	NA
	Longitudinal Spacing	±3/4"	±1/2"	±3/4"	NA
	Transverse Location	±1/4"	±1/4"	±1/4"	NA
Diafram or Lateral Tie Location		±1/2"	±1/2"	±1/2"	NA
Position of Void**	Longitudinal	NA	1"	NA	NA
Position of Strands		±1/4"	±1/4"	±1/4"	±1/8" Vertical & ±1/2" Horizontal
Position of Hold-Down Points		±6"	±6"	±6"	NA
Position of Handling Devices		±6"	±6"	±6"	NA

*Measured from bottom of panel
**Length of void material -1" -6"

TABLE I

Allowable Tolerances

Where sections of forms are to be joined, an offset of one-sixteenth of an inch for flat surfaces and one-eighth of an inch for corners and bends will be permitted. Offsets between adjacent end header sections shall not exceed one-fourth of an inch.

Variations greater than specified above shall be corrected to within these tolerances or be subject to structural review. Horizontal alignment (sweep) in beams and girders only, which may increase at a later time over that shown in the table, will be acceptable if the member can be hauled, erected and aligned to within the above tolerance without being damaged.

Tolerances for piling shall be as specified in the Item, "Concrete Piling".

Tolerances for post-tensioned segmental members shall be subject to the requirements of the Item, "Concrete for Structures".

For prestressed concrete box beams only, variation from tolerances set forth in the specifications, which do not affect appearance or fit-up of the finished structure, and which will be covered with concrete as stated in Article 425.6. Defects and Breakage, will not require correction.

When prestressed panels are erected, the fit of mating surfaces shall be such that excessive grout leakage will not occur. If such fit is not provided the joint shall be filled with grout or sealed with an acceptable caulking compound prior to the placing of the cast-in-place portion of the slab.

425.8. Measurement. Precast, prestressed concrete beams or box beams of the type specified, stressed and cast as required by the plans, will be measured by the linear foot. For those items measured for plan quantity payment, adequate calculations have been made in accordance with Article 9.1. If no adjustment is required by Article 425.9, additional measurements or calculations will not be required.

Other precast, prestressed concrete members of the size and type specified, cast and stressed as required by the plans, will be measured by the linear foot, each, the square foot, or by the square yard as required by the plans. Precast concrete panels will not be measured for payment, but will be considered subsidiary to the various bid items.

Precast, prestressed concrete spans of the size and type specified, cast and stressed as required by the plans, will be measured as each prestressed span complete in place.

Cast-in-place structures (or structures where the Contractor has the option of casting-in-place) will be measured in accordance with the provisions of the Item, "Prestressing".

425.9. Payment. For precast, prestressed concrete beams or box beams, the quantity to be paid for will be that quantity shown on the contract plans and in the proposal, except as may be modified by the following:

Plan quantities will be adjusted:

(1) When a beam or box beam has been erroneously included or omitted from the plans, the quantity shown on the plans for that span or unit will be increased or decreased and included for payment. Quantites revised in this manner will not be subject to the provisions of Article 4.5.

(2) When the plan quantity for a span or unit is in error by 5 percent or more, a recalculation will be made and the corrected quantity included for payment. Quantities revised in this manner will not be subject to the provisions of Article 4.5.

The party to the contract requesting the adjustment shall present to the other, three copies of the description and location, together with calculations of the quantity for the span or unit involved. When this quantity is certified correct by the Engineer, it will become the revised plan quantity.

When quantities are revised by a change in design, the 'plan quantity' will be increased or decreased by the amount involved in the design change. Quantities revised in this manner will be subject to the provisions of Article 4.5.

Precast, prestressed concrete spans will be paid for at the unit price bid for each "Prestressed Concrete Span".

Other prestressed concrete members will be paid for at the unit price bid per linear foot, at the unit price bid for each, at the unit price bid per square foot, or at the unit price bid per square yard as the case may be for "Prestressed Concrete" (specify name and/or type).

A partial allowance will be made for materials and for precast, prestressed concrete members (cast, but not erected) in accordance with the provisions of Article 9.6.

The above prices shall be full compensation for constructing the members, furnishing and tensioning prestressing steel; conduit, when required; furnishing and placing reinforcing steel, bearing plates, bearing pads; all bars, anchorage plates and appurtenances which become an integral part of the structure; for grouting of holes; for any necessary repair and for any special treatment of end anchorages and shoes as indicated on plans; and, for furnishing all materials, tools, equipment, labor and incidentals necessary to fabricate, transport and erect the members in the structure as indicated on the plans.

ITEM 426
PRESTRESSING

426.1. Description. This item shall govern for the furnishing, fabricating, storing and handling of prestressing materials, for the

prestressing of precast members, and for the construction and prestressing of cast-in-place structural units, in accordance with the plans, with approved shop and working drawings and with these specifications.

Unless otherwise shown on the plans, the Contractor has the option of furnishing any type of post-tensioning system meeting the requirements of the specifications. The system selected shall provide the magnitude and distribution of prestressing force and ultimate strength required by the plans without exceeding allowable temporary stresses. Unless otherwise shown on the plans all design procedures, coefficients and allowable stresses as well as tendon spacing and clearances shall be in accordance with the latest Standard AASHTO Specifications for Highway Bridges.

426.2. Materials. Materials required for use under this Item shall conform to the following:

Concrete	Item 421
Reinforcing Steel (non-prestressed)	Item 440
Structural Steel	Items 441,442
Elastomeric Materials	Item 435
Expansion Joints	Items 420 and/or 436
Prestressing Hardware	Proprietary

Concrete shall be of the class shown on the plans.

Prestressing steel shall conform to one of the following types:

Steel wire conforming to ASTM Designation: A421; seven wire strand conforming to ASTM Designation: A416; or, alloy bars conforming to ASTM Designation: A722.

When required by the plans or permitted by approval of optional designs, low-relaxation strand, meeting the requirements of ASTM A416 and Supplement 1 thereto, shall be used. The Contractor shall furnish certified test reports to the Engineer that the lo v-relaxation strand furnished meets all of the above requirements. In addition, the Contractor shall furnish samples for further testing in accordance with Test Methods Tex-710-I and 442-A.

Wires, strands or bars with greater ultimate strength but otherwise produced and tested in accordance with ASTM Designation: A416, A421 and/or A722 and the requirements of this specification, will be permitted provided the physical properties as outlined in the applicable specification are shown on the shop drawings and provided they have no properties which make them less satisfactory than the specified material.

Tendon is defined as "any single unit used to apply prestressing forces to the member". For post-tensioned units, this shall be each bar, each group

of wires or each group of strands having common end anchorage, and for pre-tensioned units shall be each individual strand. Post-tensioned tendons shall be grouted or coated, as required by the plans.

Tendon couplers shall be used only at locations specifically shown on the plans or approved by the Engineer and shall conform with the following:

(1) For grouted tendons, end anchorages and tendon couplers shall develop a minimum of 95 percent of the required ultimate strength of the tendon with a minimum elongation of 2 percent when tested in the unbonded condition.

(2) For coated tendons, end anchorages and tendon couplers shall develop at least 100 percent of the required ultimate strength of the tendon, with a minimum elongation of 2 percent, and in addition shall withstand 500,000 cycles from 60 to 70 percent of the required ultimate strength of the tendon without failure or slippage.

Material for coating non-bonded (ungrouted) tendons shall be a non-volatile, low friction mineral oil base grease, with a rust preventing additive having a relatively uniform viscosity under temperature ranges of 20 F to 120 F. A protective sheathing shall be provided around the tendon consisting of a waterproof material capable of maintaining the tendon tightly bundled and containing the lubricant.

The conduit to enclose grouted, post-tensioned tendons shall be mortar tight, and may be either rigid, galvanized, ferrous metal, with a smooth inner wall, capable of being curved to the proper configuration, or may be flexible, interlocking, galvanized ferrous metal. Couplers for either type shall also provide a mortar tight connection. Rigid conduit may be fabricated with either welded or interlocking seams. Galvanizing of welded seams for the rigid conduit or for conduit couplings will not be required. Either type of conduit shall be capable of withstanding all forces due to construction operations, without damage.

For all conduit, the inside area shall be at least two times the area of the enclosed prestressing steel. It shall be adaptable to enlarging or flaring near the ends as required to accommodate the necessary anchoring system. The conduit shall be equipped with fittings for injection of grout and ports for venting.

All tendons shall be identified by heat number, or reel number in the case of seven wire strand, and tagged for identification. Anchorage assemblies shall be identified in a like manner. The Contractor shall furnish specimens for test purposes in accordance with Test Method Tex-710-I.

Testing of complete tendons for compliance with the requirements of paragraphs (1) and (2) above will be at the Contractor's expense and the results certified in writing to the Engineer. In addition, the Contractor shall

furnish, for testing, one specimen of each size of prestressing tendon, including couplings, of the selected type, with end fittings attached, for ultimate strength tests only. These specimen shall be 5 feet in clear length, measured between ends of fittings. If the results of the test indicate the necessity of check tests, additional specimen shall be furnished without cost. For prestressing systems previously tested and approved on Department projects, complete tendon samples need not be furnished, provided there is no change in the material, design, or details previously approved. Shop drawings or prestressing details shall identify the project on which approval was obtained, otherwise sampling will be necessary.

For prefabricated tendons, the Contractor shall notify the Materials and Tests Engineer at least 10 days prior to the installation of end fittings or the heading of wires in order that sampling and testing may be arranged.

Grout to be used for the grouting of tendons shall be proportioned as follows:

Portland Cement - Type II	94 Lbs.
Water	5½ Gals. Max
Expanding Admixture - to provide 2 to 4% expansion	

50 lbs. Max. of Fly ash with a maximum carbon content of 4 percent may be added to the above mixture if desired. Other pozzolans will not be permitted. Other mixtures of equal or better strength, workability and freedom from corrosive elements may be approved by the Engineer.

426.3. Packaging, Storing and Handling. All prestressing steel shall be protected against physical damage and corrosion from the time of manufacture to grouting or encasing in concrete.

Rust on prestressing steel which can be removed by light rubbing is acceptable. Streaks or spots, which may remain after rust removal, are acceptable if no pitting is present. Tight mill scale is acceptable but loose mill scale shall be removed.

Prefabricated post-tensioning elements shall be protected from moisture by taping or wrapping the ends and all openings in the conduit or by other acceptable means.

426.4. Equipment. The Contractor shall furnish suitable hydraulic jacks for stressing the steel. These jacks shall be equipped with gauges graduated to read directly to one percent of the total load applied, and calibrated to measure accurately the stress induced in the steel.

For post-tensioning, the jacks shall have a stroke of adequate length so that the stressing, including temporary overstress, can be done in one movement. They shall be equipped with proper ports or windows for adequate visual examination and measurement of tendon movement. They

shall also be capable of slow release of stress to allow relaxation from overstress to the proper seating force.

For pretensioning, the jacks shall have sufficient capacity to provide the required stressing force and to permit simultaneous release of all straight strands. Single strand stressing is permitted, but release of strands individually with single strand jacks will not be permitted. Flame release of deflected strands in beams and boxes, and straight strands in piling and panels will be permitted provided the method and sequence is submitted to and approved by the Engineer.

The Contractor shall furnish a grout pump of sufficient capacity to properly place grout in the quantities and pressures required.

When required to post-tension cast-in-place or pre-cast units, the Contractor shall furnish a compression testing machine, meeting the requirements of the Item, "Plant Inspection Laboratory (Equipped)". In lieu of the above, and with permission of the Engineer, the Contractor may provide the facilities of an approved Commercial Laboratory for the testing of cylinders.

426.5. **Working Drawings.** For cast-in-place prestressed units, in addition to forming and falsework plans required by the Item, "Concrete Structures", the Contractor shall submit prestressing details. These details shall contain all necessary information for construction including:

(1) **Design Calculations.** Sufficient calculations to support the system and method of prestressing proposed for use including realistic friction loss diagrams shall be submitted. When the required jacking force for a particular type of tendon and conduit is shown on the plans, and that type of tendon and conduit are furnished, design calculations need not be submitted except as necessary to adjust the jacking force for a different seating loss than shown on the plans.

(2) **Prestressing Details.** These drawings shall show details of type, size and number of units per tendon, forces applied per tendon, end anchorage systems, tendon profile, grouting and venting ports, grouting procedure, marking used to identify unlike tendons and their location, total force per tendon with proper conversion to the units expressed on the jack gauge, total elongation and 90 percent elongation (measureable elongation), temporary overstress and other information necessary to properly complete the work.

A complete numbered layout showing the pattern to be followed in stressing tendons to properly stress the member, and a step-by-step stressing sequence shall be submitted. Complete provisions shall be made for each operation, including tendon slack removal, overstress, gauge reading for seating, elongation measurement, shim insertion or

wedge seating. All data pertaining to the stressing of the tendons, for a structure, shall appear in one table.

Details of the method of support for, and location of the conduit, with dimensions provided to properly locate the conduit so that the center of gravity of the enclosed steel will be at its proper location. The details shall show the offsets from the bottom of the conduit taking into account the position of the prestressing steel within the conduit.

The prestressing details shall be submitted on standard 22 inch x 36 inch sheets.

Design calculations may be on standard letter size sheets.

Six sets of details and three sets of design calculations shall be submitted to the Engineer, or directly to the Bridge Division when so directed.

When a railroad underpass structure is involved, an additional set will be required.

426.6. Construction Methods.

(1) **General.** The general requirements of the Item, "Concrete Structures" shall govern for cast-in-place construction.

Prior to stressing the Contractor shall furnish the Engineer certified copies of load calibration curves on all jacks and gauge systems to be used in the work. Stressing systems shall be recalibrated when required by the Engineer.

The test for "Partial Tensioning Strength", "Handling Strength", and/or "Tensioning Strength" shall be the average breaking strength of two cylinders.

(2) **Post-Tensioning.** Suitable means shall be provided for measuring the elongation of the steel to the nearest one-sixteenth of an inch. In the event of apparent discrepancies of more than 5 percent between stresses indicated by elongation and gauge pressure, the entire operation shall be checked carefully and the source of error determined and corrected before proceeding further.

If end anchorages permit, tendons may be inserted in the member after placing of the concrete. Positive means of holding the conduit in its correct position shall be provided in all cases and shall be indicated on the working drawings submitted for approval. The conduit shall be supported at intervals of not more than five feet, or as shown on the plans. They shall be securely fastened to prevent movement during placement of concrete.

Tolerance for vertical positioning of tendons will be ± one-fourth of an inch, or one percent of the depth of the member, whichever is greater.

After the concrete has reached a compressive strength equal to the "Partial Tensioning Strength" specified on the plans, as indicated by compressive cylinder tests, the members may be partially prestressed for the purpose of removal of members from the casting bed to a curing area, provided satisfactory provision is made to bring all stressing units (including units stressed for handling) up to full required stress at the time of final stressing. The units to be stressed and the amount and pattern of the stressing for the partial prestressing shall be submitted with the prestressing details and approved by the Engineer.

The temporary overload force, when required, and the post-tensioning force may be applied when the concrete has reached a compressive strength equal to the "Tensioning Strength". These forces may be applied to one or both ends of the tendon, unless otherwise shown on the plans. The sequence of post-tensioning shall prevent overstressing the member in vertical or lateral bending at anytime, and shall be indicated on the prestressing details.

The Prestressing Details submitted by the Contractor shall reflect the following general tensioning procedure, modified for each particular installation:

(a) The tendons will be tensioned in the sequence designated in the Prestressing Details.

(b) Initial tensioning to take the slack out of the tendons will be at 10 percent of the maximum tensioning load unless otherwise shown on the approved Prestressing Details.

(c) After the initial tensioning, the tendons shall be reference marked to determine elongation.

(d) After tensioning to overcome friction, the tension shall be reduced to that required to set the anchorage.

Loss of elongation due to anchor set shall be checked for agreement with the anticipated value used in the stress calculations. Excessive anchor set shall be deducted from the measured elongation and corrected if necessary to maintain agreement between elongation and gauge pressure within 5 percent.

(e) After stressing and anchoring all tendons and upon the Engineer's approval, projecting tendons shall be trimmed as shown in the approved Prestressing Details.

For grouted tendons the conduits shall be grouted within 48 hours after the completion of the tensioning operation. Grout must be pumped toward an open vent. Grout shall be pumped continuously under moderate pressure at one end of the conduit until all entrapped air is forced out the open vents downstream from the grout pump. The open vents shall be

closed as soon as grout issues in a steady stream. After all grout ports have been closed, the pressure shall be increased to a minimum of 75 psi and held at this pressure for approximately 15 seconds. The grouting entrance port shall then be closed.

Grout ports will be required at the far end of the tendon, and at the high points of the tendon profile when there is more than 6 inch variation in the vertical position of the conduit. Tendons with less than 6 inch vertical variation shall have grout ports at the far end and at intervals between the far end and injection end not to exceed 100 feet. Grout ports shall consist of one-half of an inch minimum diameter galvanized metal pipe, with caps or other arrangements having a minimum port diameter of one-half of an inch, and as approved by the Engineer. The tops of the grout ports shall be set approximately one-half of an inch below the finished surface of the concrete. Recesses caused by the grout ports in the concrete surface shall be filled with mortar and finished as directed upon completion of grouting.

(3) **Pretensioning.** All tendons to be prestressed in a group shall be brought to a uniform initial tension of 1000 pounds (plus or minus 50 pounds) per tendon prior to being given their full pretensioning. Initial tension greater than that specified herein may be used when designated and approved on the shop drawings. The tension shall be measured by some suitable means such as a dynamometer so that its amount can be used as a check against elongation computed and measured.

After this initial stressing, the straight strands shall be stressed to a total tension as required by the plans by means of hydraulic jacks equipped with gauges graduated to read directly to one percent of the total load to be applied, and calibrated to measure accurately the stress induced in the steel. The induced stress shall be measured by elongation of the strands and checked by gauge pressure. The results shall agree within 5 percent.

Means shall be provided for measuring the elongation of the straight strands to an accuracy of one percent of the theoretical elongation or one-eighth of an inch, whichever is smaller. In the event of apparent discrepancies of more than 5 percent between stresses indicated by gauge pressure and elongation, the entire operation shall be checked carefully and the source of error determined and corrected before proceeding further.

Where a combination of straight and draped strands are used, the measured elongation of the draped strand shall not vary by more than 5 percent from the calculated elongation. Measurements on individual deflected strands to establish differential stresses at different points in the member shall be averaged at a cross section of the member, and the

averages shall be within 5 percent of the calculated elongation. No individual strand shall vary from the calculated elongation by more than 10 percent at any measured cross section.

Independent references shall be established adjacent to each anchorage to indicate any yielding or slippage that may occur between the time of initial stressing and final release of the tendons.

With the tendons fully stressed as prescribed above and all other reinforcing in place, the concrete shall be cast to lengths necessary to provide the lengths required by the plans, after shrinkage and elastic shortening has occurred.

After strength requirements are attained, the tension in the tendons shall be gradually and simultaneously released and the tendons cut off as required, using a sequence to minimize shock and reduce premature tendon breakage.

When draped tendons are used, positive external hold downs may be required to offset the vertical forces in the beam at the time of stress release.

(4) **Combined Pretensioning and Post-Tensioning**. Where the plans call for a combination of pretensioning and post-tensioning, all of the requirements of both the pretensioning and post-tensioning shall apply, in this order, and the requirements shall overlap as necessary to fulfill the intent of this specification.

426.7. Measurement.

(1) All precast concrete members (except piling) either pretensioned, post-tensioned, or combined pre- and post-tensioned, will be measured and paid for as specified in the Item, "Prestressed Concrete Structures". Prestressed piling will be measured and paid for as specified in the Item, "Concrete Piling".

(2) Cast-in-place prestressed concrete structures and units will be measured as follows:

(a) Concrete, non-prestressed reinforcing steel, and structural steel (except bearing and anchorage devices integrally a part of the post-tensioning system) will not be measured by this Item, but will be measured by the cubic yard or by the pound in accordance with the applicable specifications for these items. Grout and ducts for post-tensioning will not be measured but will be considered subsidiary to this item.

(b) The prestressing steel required and the work involved in prestressing of cast-in-place structures will be measured by the product of the required final prestress force and the horizontal length over which the prestressing is applied, expressed in thousands of kip-feet (MKF). For slab units this will be calculated as the product of the required final prestress force per foot of width and the area out-to-out of the slab unit. Unless otherwise shown on the plans, the required final prestress force used will be the maximum value required within a unit, and the length of prestressing or the area in the case of a slab will be taken as the overall dimensions of the unit, no deductions being made for the clearance distance between the ends of tendons and the edges of the unit.

426.8. **Payment.** Payment for the work and all materials for prestressing cast-in-place units, measured as specified above will be made at the unit price bid per thousand kip feet of Prestressing (Grouted) or Prestressing (Coated).

The amount to be paid for will be that quantity shown on the contract plans except as modified by the following:

Either party to the contract may request an adjustment of quantities shown on the contract plans (by each separate bid item), if the quantities, calculated as outlined in Article 426.7., vary from those shown on the contract plans by more than the following:

(1) Over 5000 MKF	one half of 1 percent
(2) 1000 MKF through 5000 MKF	1 percent
(3) Less than 1000 MKF	1½ percent

The party to the contract which requests an adjustment shall present to the other, two copies of calculations showing the revised quantities for the portion or portions of the structure in question. These revised quantities when proven correct, together with all other quantities under the same bid item, shall constitute the final quantity for which payment will be made. When this quantity is certified correct by the Engineer, it will become the revised plan quantity. Quantities revised in this manner will not be subject to the provisions of Article 4.5.

When quantities are revised by a change in design the 'plan quantity' will be increased or decreased by the amount involved in the design change. Quantities revised in this manner will be subject to the provisions of Article 4.5.

The above payment shall be full compensation for furnishing all prestressing steel, all materials, fabrication, transportation, erection, prestressing and for furnishing all metal encasing ducts, grout fittings, end

anchorages, bearing plates, and all tools, labor, equipment and incidentals necessary to complete the work.

ITEM 427

SURFACE FINISHES FOR CONCRETE

427.1. **Description.** This item shall govern for the furnishing of materials; for the application; for the methods of construction; for the material requirements; and, for testing of materials used in the application of a surface finish to concrete.

427.2. **General.** The grade and/or class of finish shall be as described herein and as specified on the plans.

"Grade" of finish designates the areas to which a higher finish is to be applied, beyond the requirements of an Ordinary Surface Finish. Four grades of finish are included herein.

"Class" of finish designates the materials or the process to be used in providing the grade of finish. Three classes of finish are included herein.

For structures and surfaces not described herein under grade of finish, a class of finish only may be specified on the plans. Where neither a grade or class is specified, an Ordinary Surface Finish only will be required as specified in the Item, "Concrete Structures".

Where the plans specify a grade and class of finish, i.e., Grade II, Class C, only that class of finish shall be furnished.

Where the plans specify a grade of finish only, i.e., Grade I Finish, any of the classes of finish may be furnished. Only one class of finish shall be furnished on any individual structure, twin structures or on structures in close proximity to each other, except as specified for prestressed concrete members below.

427.3. Grade of Finish.

(1) Grade I. The following areas shall receive a Class A, B or C (two rub) Finish, except that prestressed members shall receive either a Class A or B Finish only.

All concrete surfaces of railing, including the parapet types; exterior vertical faces of slabs, slab spans, arches and box girders; the outside and bottom surfaces of fascia beams or girders (including prestressed members); the underside of overhanging slabs to the point of juncture of the supporting beam; all exposed vertical surfaces of bents and piers and bottom surfaces of bent caps; all surfaces of tie beams, abutments, bridge wingwalls, culvert headwalls and wingwalls and retaining walls exposed to view after all backfill and embankment is placed.

Unless otherwise noted on the plans, the underside of the slab of slab spans shall be finished its entire width.

Unless otherwise noted on the plans, exposed surfaces of pump houses and other miscellaneous concrete surfaces shall receive a Class A, B or C (one rub) Finish.

(2) **Grade II.** All concrete surfaces of railing, including the parapet types, all exposed surfaces of bridge wingwalls and the exterior vertical faces of slabs and slab spans shall receive a Class A, B or C (two rub) Finish. All other surfaces described under Grade I Finish shall receive a Class A, B or C (one rub) Finish, except that prestressed members shall receive a Class A or B Finish only. The underside of slab spans shall receive an Ordinary Surface Finish only.

(3) **Grade III.** All concrete surfaces of railing, including the parapet types, all exposed surfaces of bridge wingwalls and the exterior vertical faces of slabs shall receive a Class A, B or C (two rub) Finish. All other surfaces described under Grade I Finish shall receive an Ordinary Surface Finish.

(4) **Grade IV.** The top and roadway faces only of all concrete railing, including the parapet types, and bridge wingwalls shall receive a Class A, B or C (one rub) Finish. All other surfaces described under Grade I shall receive an Ordinary Surface Finish.

427.4. Class of Finish. The Class of Finish designates either an adhesive grout material, a paint-type material, or a rubbing process applied to surfaces specified in Grade of Finish, as required herein and/or as designated on the plans.

Unless otherwise shown on the plans the color shall be concrete gray.

(1) **Class A.** This finish shall consist of an adhesive grout textured coating with a minimum one-sixteenth inch thickness, composed of one part white cement, one part natural (gray) cement, two parts masonry sand, one part (latex) emulsion, and enough water to form a viscous slurry of a consistency that may be applied by spray gun, brush or roller without appreciable running or sagging. The proportions of white and gray cement may be varied slightly to obtain the desired color.

Gradation of the masonry sand shall be as required to produce a texture satisfactory to the Engineer.

Prepackaged materials meeting these requirements and acceptable to the Engineer as to color, texture and appearance, will be permitted.

(2) **Class B.** The finish shall be a paint-type material, consisting of a synthetic resin, containing fibrous as well as texturing pigments, which when applied by a one coat spray application at the rate of 45 plus or minus

5 square feet per gallon will yield an acceptable textured coating. Certification by the manufacturer of the above materials will be required.

(3) Class C. This finish shall consist of a one rub or two rub system, as the case may be, meeting the requirements set forth below under "Construction Methods".

427.5. Approval of Surface Finishing Materials. The material to be furnished shall meet the requirements of Departmental Specification D-9-8110, Structural Coatings, latest revision, and shall be shown on the Departmental approved list maintained by the Materials and Tests Engineer, 38th and Jackson Streets, Austin, Texas, 78703.

In addition to the above, the manufacturer shall furnish the following:

(1) At the time of original request for approval of the surface finishing material, the manufacturer shall supply a one gallon sample of the material to the Materials and Tests Engineer.

(2) Each six months after approval of the material, the manufacturer shall furnish a notarized certification indicating that the material originally approved has not been changed or altered in any way. Any change in formulation of a surface finish shall require retesting, and shall be approved by the Materials and Tests Engineer prior to use.

The Engineer may request additional information to be submitted such as infrared spectophotometry scan, solids content, etc., for further identification. A change in formula discovered by any of the tests prescribed herein, or other means, and not reported and retested, may be cause to permanently bar the manufacturer from furnishing surface finish materials for State Department of Highways and Public Transportation work.

The Department reserves the right to perform any or all of the tests required by this specification as a check on the tests reported by the manufacturer. In case of any variance the Departmental tests will govern.

427.6. Construction Methods. Prior to application of any of the finishes required herein, concrete surfaces shall be given an Ordinary Surface Finish. For Class A and B materials, concrete surfaces shall be clean and free of dirt, grease, curing compound or any other bond breaking substance. Class A shall be applied on moistened surfaces but Class B requires a dry surface. The temperature of the atmosphere, concrete and compound shall be above 50 F for Classes A and B at the time of application. The finished

surfaces shall be protected against rain or freezing for a period of 24 hours after application.

Class A materials shall be applied by spraying, by roller or by brush. Class B materials shall be applied by spraying. All applications shall provide an acceptable texture of the proper coverage.

The Class A and B material shall be applied after all preparation work required by Ordinary Surface Finish has been completed, and just prior to final acceptance of the work or as directed by the Engineer.

The Class C Finish shall be performed with a carborundum stone as follows, after all preparatory work required by Ordinary Surface Finish has been completed:

For a two rub system, the first rubbing shall bring the wetted concrete face to a paste and produce a smooth dense surface without pits, form marks or other irregularities. The use of cement or grout to form the paste will not be permitted. Striping with a brush and washing after the first rubbing will not be required. Chamfer lines shall be finished during the second rubbing.

The first rubbing shall be done soon after form removal. Membrane curing, if used, shall be applied after the first rub is complete. Prior to the second rubbing, any remaining curing membrane shall be removed from the surface by brushing, buffing or other satisfactory methods.

The second rubbing shall be performed when conditioning the structure for final acceptance. The specified surfaces shall be cleaned of drip marks and discolorations and given a final rubbing. The surface shall be striped neatly with a brush, and the paste allowed to take a reset, after which the surfaces shall be washed with clean water leaving them with a neat and uniform appearance and texture.

For a one rub system, the rubbing requirements shall be the same as for the first rub above, except chamfer lines shall be finished and the paste spread uniformly, striped with a brush and allowed to take a reset after which the surfaces shall be washed with clean water leaving them with a neat and uniform appearance and texture.

427.7. Special Surface Finishes.

(1) General. When special surface finishes are required for retaining walls, panels, copings or similar construction, the Contractor shall prepare sample panels for approval of the finish and the method of application. Unless otherwise required, panel or pattern arrangement and dimensions may be varied to achieve a more pleasing appearance or to utilize forming material more efficiently. Aggregates, materials, variation of panel or pat-

tern arrangement, dimensions and other features affecting the work shall be approved prior to start of the work.

(2) Striated Finish. The striated (grooved) pattern shall be as shown on the plans or as approved by the Engineer.

The finish shall be made by lining the forms with striated sheets of plywood, plastic, fiberglass, metal, or other material acceptable to the Engineer. The striations on the panels shall be of a smooth, wide pattern, not sharp or angular.

A chamfer groove shall be used along all edges of each panel. All ties, bolts or other forming accessories shall be located along the chamfer grooves or panel edges.

(3) Exposed Aggregate Finish. Exposed aggregate panels may be either raised, recessed or as indicated on the plans with the sides of each panel chamfered as directed by the Engineer.

The aggregate used for this finish shall be approved by the Engineer. Unless otherwise noted on the plans, aggregate shall conform to the grading requirements of Grade 2 aggregate except that a minimum of 50 percent shall be retained on the three quarter inch sieve. Gravel of predominantly rounded particles shall be used, except that when required by the plans or approved by the Engineer in writing, cursbed stone may be used. The aggregate shall be large enough to remain firmly anchored in the face of the final product. The depth of finish shall be one -fourth of an inch minimum to one-half of an inch maximum, unless otherwise directed by the Engineer or required by the plans.

A surface retarder that penetrates the concrete approximately one-fourth of an inch shall be applied to the forms or concrete surface as an aid in achieving the desired finish. Wood forms may require 2 or 3 coatings to compensate for absorption. Form joints shall be taped or caulked to prevent escape of the retarder during placing operations.

Treated form surfaces shall be protected from sun and rain while exposed to the atmosphere. In case of high humidity, or if rain has dampened the forms prior to placing concrete, a reapplication of the surface retarder may be required to provide uniform coverage of the retarder on the forms.

Adjacent areas of fresh concrete not requiring exposed aggregate finish shall be protected when the retarder is applied.

The finish shall be obtained by sandblasting, bush hammering, water blasting or other methods, as approved by the Engineer. Horizontal surfaces may be finished by combination of brushing and washing, but only after the concrete has set sufficiently to prevent loosening of the aggregate.

Unless otherwise directed by the Engineer, forms for surfaces requiring exposed aggregate finish shall be removed 12 to 15 hours after concrete placement. The exposed aggregate operation shall be accomplished immediately after form removal. Except for the time required for obtaining the exposed aggregate finish, curing of all surfaces shall be maintained for the minimum 4 day curing time. All surfaces shall be either water cured or may be cured with an approved clear membrane curing compound. If water curing is used, it shall be followed by a clear membrane curing compound which shall meet the requirements of the Item, "Membrane Curing".

Care shall be taken to ensure proper vibration at all points of concrete placement to prevent honeycomb or segregation of the materials. Vibration shall be done in such a manner as to provide adequate penetration of previously placed concrete lifts. Care shall be taken to prevent contact of the vibrator with the face form.

427.8. **Measurement and Payment.** No direct measurement or payment will be made for the work to be done, the equipment or materials to be furnished under this item, but shall be considered subsidiary to the particular items required by the plans and the contract.

ITEM 428

CONCRETE SURFACE TREATMENT

428.1. **Description.** This item shall govern for the furnishing and application of a linseed oil treatment to concrete surfaces. Unless otherwise noted on the plans, the upper surfaces of the roadway slab (including direct traffic culverts), bridge sidewalks and medians, and the inside faces of curbs shall be treated. Any surfaces given a higher grade or class of finish as specified in the Item, "Surface Finishes for Concrete", will not be given linseed oil treatment.

428.2. **Materials.** This material shall consist of Boiled Linseed Oil and Mineral Spirits for any ambient temperature range above 40 F. Boiled Linseed Oil and Kerosene may be used at the option of the Contractor for an ambient temperature range above 70 F. The materials shall meet the following specifications and shall be shipped combined in a mixture containing a minimum of 50 percent and a maximum of 70 percent boiled linseed oil by volume.

(1) **Boiled Linseed Oil.** Boiled Linseed Oil shall conform to the requirements of Standard Specifications for Boiled Linseed Oil, ASTM Designation: D 260, Type 1.

(2) **Mineral Spirits.** Mineral Spirits shall conform to the requirements of Standard Specifications for Mineral Spirits, ASTM Designation: D 235.

(3) **Kerosene.** Kerosene shall conform to the requirements of Federal Specifications for Kerosene VV-K-211d.

(4) **Shipment.** The material shall be shipped in clean, leakproof containers with contents clearly stated on them.

428.3. **Construction Methods.** Before application, concrete surfaces shall be power broomed, air blasted or cleaned by other means acceptable to the Engineer, to remove any laitance, oil or grime which may retard or prevent absorption of the mixture by the concrete.

The concrete surfaces shall be dry and the ambient temperature shall be 40 F or above at the time of application. Surface treatment shall not be applied earlier than 21 days after interim membrane curing compound was applied. If there is residual curing compound remaining on the slab, which prevents the linseed oil treatment from penetrating, removal of the membrane by light sandblasting, or other methods acceptable to the Engineer, may be utilized prior to application of the linseed oil, or application of the surface treatment delayed until residual membrane curing compound is no longer present.

Unless otherwise shown on the plans, the material shall be applied in two stages at the rate of approximately 40 square yards per gallon for the first stage and approximately 67 square yards per gallon for the second stage for a total coverage of approximately 25 square yards per gallon. The second application shall not be made until 24 hours after the first application is made.

Application to slabs shall be made with a herbicide, insecticide or similar type spray machine equipped with a spray bar and driven at such speed as to provide the required coverage. In isolated cases application may be made using a hand operated pressure pump equipped with spray nozzles.

Traffic shall not be permitted on treated surfaces for a minimum of 24 hours after the final application has been completed.

Any excess liquid remaining on the surface after four hours shall be broomed off or covered with an application of fine sand.

The mixture shall not be heated.

428.4. **Measurement.** Concrete Surface Treatment shall be measured by the square yard of concrete surface treated at the specified total rate of application, using the dimensions shown on the plans.

428.5. **Payment.** The amount to be paid will be that quantity shown on the contract plans and in the proposal, except as may be modified by the following:

Either party to the contract may request an adjustment of the quantities shown on the contract plan (by each separate bid item), if the quantities, measured as outlined in Article 428.4., vary from those shown on the contract plans by more than 5 percent.

The party to the contract which requests an adjustment shall present to the other, three copies of field measurements and calculations showing the revised areas for the structure or structures in question. These revised areas, when proven correct, together with all other surface treatment under the same bid item, shall constitute the final quantity for which payment will be made. Adjustment of these quantities will not be subject to the provisions of Article 4.5.

When quantities are revised by a change in design the 'plan quantity' will be increased or decreased by the amount involved in the design change. Quantities revised in this manner will be subject to the provisions of Article 4.5.

This price shall be full compensation for all materials, tools, labor, equipment and incidentals required to perform the work prescribed herein.

ITEM 430

EXTENDING CONCRETE STRUCTURES

430.1. Description. This item shall govern for concrete for extending structures and for preparation of the existing structures for extending or widening, including the materials used; the removal of portions of the existing structure, preparation of exposed surfaces of steel and concrete for bonding new construction to old; and the construction of the proposed extensions, all as indicated on the plans.

430.2. Materials. All materials shall conform to the requirements of the pertinent items as follows:

Materials	Item No.
Concrete	420, 421
Expansion Joint Material	420 and/or 436
Reinforcing Steel	440

430.3. Construction Methods. The work shall be performed in accordance with the provisions of the Item, "Concrete Structures", and in conformance with the requirements herein.

The Contractor shall verify all pertinent dimensions of the existing structure, prior to ordering materials required for the extensions.

Portions of the old structure shall be removed to the lines and dimensions shown on the plans, and these materials shall be disposed of as shown on the plans or as directed by the Engineer. Unless otherwise noted on the plans, metal railing shall be removed in such a manner that it will not be

damaged, stacked neatly on the right-of-way at convenient loading points which will not interfere with traffic or construction and will remain the property of the Department. Any portion of the existing structure, outside of the limits designated for removal, damaged during the operations of the Contractor shall be restored to its original condition at his entire expense. Explosives shall not be used in the removal of portions of the existing structure unless approved by the Engineer, in writing.

When the headwalls, wingwalls and apron are specified on the plans to be reused in the extended structure, the portion to be reused shall be severed from the old structure to the lines and details shown on the plans. The headwall unit shall be moved to the new location specified, by methods approved by the Engineer, and the extension concrete and reinforcement placed according to the plan details. Any portion of the headwall unit damaged by the moving operation shall be restored to its original condition at the expense of the Contractor.

Unless otherwise noted on the plans, a demolition ball, other swinging weight or impact tool, will be permitted on those portions of the structure not immediately adjacent to the 'break' line of the concrete.

The concrete shall be severed at the 'break' line by pneumatic tools and may be followed by the use of the demolition ball, or other methods acceptable to the Engineer. The final removal of concrete at the 'break' line shall be with pneumatic tools. Damaged concrete shall be treated as specifed above. Bridge slabs (other than multiple box culverts) shall first be sawed along the 'break' line one-half of an inch deep prior to beginning the removal of concrete.

Except when otherwise provided on the plans, new reinforcing bars shall be spliced to exposed bars in the old structure by lap splices in accordance with Table 1 of the Item, "Reinforcing Steel". When welded splices are permitted by the plans, they shall conform with the Item, "Structural Welding". For lap splices (not welded), new reinforcing steel need not be tied to existing steel where spacing and/or elevation does not match that of existing steel provided the proper lap length is attained.

Dowels, if required by the plans, shall be installed by grouting reinforcing bars to a minimum length of 12 inches into the old structure. Holes for dowel bars shall be cleaned of all loose material, wetted and filled with a 1:3 mix grout or other approved material, as may be specified on the plans, immediately prior to placing of dowel bars.

Concrete surfaces which will be in contact with new construction shall be roughened and cleaned prior to placing of forms. These surfaces shall be dampened and coated with mortar just prior to placing fresh concrete.

Roadway slabs shall be finished in accordance with Article 420.20 except that when an overlay is required, the slabs shall be given a reasonably

smooth surface finish by longitudinal or transverse screeding without any straight edge requirements.

The widened portion of bridges and direct traffic culverts shall not be opened to construction traffic or to the traveling public until authorized by the Engineer in accordance with the following:

Authorization may be given after the last slab concrete has been in place at least 14 days for light construction traffic not to exceed a three-quarter ton vehicle.

Authorization for normal construction traffic, and when necessary to the traveling public, may be given after the last slab concrete has been in place 30 days. Construction vehicles which exceed the legal load limit will not be authorized to cross structures. Vehicles used exclusively to transport ready-mixed concrete, and which have three axles, will be permitted only if the gross weight does not exceed 51,000 pounds. Speed of such vehicles shall be limited to no more than 10 miles per hour.

Where a detour is not readily available or economically feasible to use, an occasional crossing of a structure with overweight equipment may be permitted for relocating equipment only but not for hauling material, providing a structural analysis of the structure using the exact equipment in question, indicates no damage will result. The structural analysis must be approved by the Engineer. Temporary matting and/or other requirements may be imposed by the Engineer if an occasional crossing is permitted.

430.4. Measurement. The quantities of concrete of the various classifications which will constitute the completed and accepted structure or structures in place will be measured by the cubic yard, each, square foot, square yard, or linear foot as the case may be. Measurement will be as follows:

(1) General.

(a) All concrete quantities will be based on the dimensions shown on the plans or those established in writing by the Engineer. Diafram concrete, when required, will be included in the slab measurement.

(b) In determining quantities, no deductions will be made for chamfers less than two inches, embedded portions of structural steel or prestressed concrete beams, piling, anchor bolts, reinforcing steel, drains, weep holes, junction boxes, electrical or telephone conduit, conduit and/or voids for prestressed tendons or for embedded portions of light fixtures.

(c) For Pan Girder Spans, a quantity will be included for the screed setting required to provide proper camber in the roadway surface after form removal.

(d) For Slabs on Steel and Prestressed Beams, a quantity for the haunch between the slab and beams will be included when required. No measurement will be made during construction for variation in the amount of haunch concrete due to deviation from design camber in the beams.

(e) For Slabs on Panels or Tee-Beams, the combination of span length, theoretical camber in beams, computed deflections, and plan vertical curve will be taken into account in determining the quantity for the slab.

Additional concrete which may be required by an adjustment of the profile grade line during construction, to insure proper slab thickness, will not be measured for payment.

(f) Quantities revised by a change in design, measured as specified herein, will be increased or decreased, as the case may be, and included for payment.

(2) **Plan Quantity**. For those items measured for plan quantity payment, adequate calculations have been made in accordance with Article 9.1. If no adjustment is required by Article 430.5., additional measurements or calculations will not be required.

(3) **Measured in Place**. For those items not measured for plan quantity payment, measurement will be made in place.

430.5. **Payment**. For structure elements designated in Table 1, and when measured by the cubic yard, the quantity to be paid for will be that quantity shown on the contract plans and in the proposal, regardless of errors in calculation, except as may be modified by the following:

Plan quantities will be adjusted:

(1) When a complete structure element has been erroneously included or omitted from the plans, the quantity shown on the plans for that element will be added to or deducted from the plan quantity and included for payment. A complete structure element will be the smallest portion of a total structure for which a quantity is included on the plans. Quantities revised in this manner will not be subject to the provisions of Article 4.5.

(2) When the plan quantity for a complete structure element is in error by 5 percent or more, a recalculation will be made and the corrected

quantity included for payment. Quantities revised in this manner will not be subject to the provisions of Article 4.5.

(3) When quantities are revised by a change in design the 'plan quantity' will be increased or decreased by the amount involved in the design change. Quantities revised in this manner will be subject to the provisions of Article 4.5.

The party to the contract requesting the adjustment shall present to the other, three copies of the description and location, together with calculations of the quantity for the structure element involved. When this quantity is certified correct by the Engineer, it will become the revised plan quantity.

Culverts and Wingwalls	Abutments
Headwalls for Pipe	Slab and Girder Spans
Retaining Walls	Slabs on Steel Spans
Inlets and Manholes	Slabs on Prestressed Spans
Slab Spans	Pan Girder Spans

Table 1
Plan Quantity Payment
(Cubic Yard Measurement Only)

NOTE: Other structure elements may be paid for as 'plan quantity', including pier and bent concrete, when so noted on the plans.

For those portions of structures not listed in Table 1, the concrete quantities, measured as provided in Subarticle 430.4.(1) will be paid for at the unit price bid per "Cubic Yard", per "Each", per "Square Foot", per "Square Yard", or per "Linear Foot", in place, for the various classifications of concrete shown.

Payment for increased or decreased costs due to a change in design, on those items measured as "Each", by the "Square Foot", "Square Yard" or "Linear Foot" will be determined by "Supplemental Agreement". Quantities revised in this manner will be subject to the provisions of Item 4.

The unit prices bid for the various classifications of concrete shown shall be full compensation for furnishing, hauling, and mixing all concrete material; placing, curing and finishing all concrete; all grouting and pointing; furnishing and placing drains; furnishing and placing metal flashing strips; furnishing and placing expansion joint material required by this item; removing the designated portion of the existing structure; moving of headwall units for reuse; cleaning, bending and cutting of exposed reinforced steel; welding of new reinforcing steel to old; all drilling and grouting for dowels; cleaning and painting old concrete with neat cement

mortar; and for all forms and falsework, labor, tools, equipment, and incidentals necessary to complete the work.

ITEM 431

PNEUMATICALLY PLACED CONCRETE

431.1. Description. This item shall govern for furnishing and placing of "Pneumatically Placed Concrete" for riprap, concrete channel or canal lining, encasement of designated structural steel members, the repair of deteriorated or damaged concrete and for other miscellaneous work as shown on the plans.

431.2. Materials. The cement, water, and aggregate shall conform to the requirements of the Item, "Concrete for Structures". Fine aggregate shall conform to the requirements of Table 2, Grade 1, and coarse aggregate shall conform to the requirments of Table 1, Grade 7, unless noted otherwise on the plans.

Air entraining admixtures, retarders and water reducing admixtures, if used, shall comply with the Item, "Concrete Admixtures".

Bar reinforcement and wire fabric reinforcement shall conform to the requirements of the Item, "Reinforcing Steel".

Expansion joint material shall conform to the requirements of the Item, "Concrete Structures".

Steel drive pins, studs or expansion bolts used for the attachment of reinforcing for repair of deteriorated or damaged concrete with pneumatically placed concrete, shall have a minimum diameter of one-eighth of an inch and a minimum length of 2 inches. Size and location of drive pins or studs and method of attachment of reinforcing shall be as specified herein or as detailed on the plans.

The equipment used for driving the pins or studs shall be of the type which uses an explosive for the driving force, and shall be capable of inserting the stud or pin to the required depth without damage to the surrounding concrete.

Expansion hook bolts, (l/4 inch diameter), shall be placed in a drilled hole of the size and depth recommended by the manufacturer. The Engineer may require that a test be made of the driving equipment for steel drive pins and check the pull out quality of the expansion bolts, prior to approving their use.

431.3. Proportioning and Mixing. The Contractor shall submit a mix design for approval of the Engineer. The basic mix design shall conform to the following:

Type	*Minimum of One Part Cement To	28 Day Compressive Strength Cores
I	4 Parts Aggregate	3600 psi Min.
II	5 Parts Aggregate	3000 psi Min.
III	7 Parts Aggregate	2000 psi Min.

*The Contractor may use a design containing more cement than required by this specification, when approved by the Engineer.

TABLE I

The cement and aggregates shall be measured by volume with enough water added to bring the materials to the desired consistency. Test panels will be required prior to approval of the mix design. The concrete will be applied to a plywood panel and shall be a minimum size of 18" x 18" x 3" in depth. The panel will be shot with the same air pressure and nozzle tip to be used for the production work. The panel will be cured in the same manner required for the particular usage required by the contract.

Three 2 inch diameter cores will be taken from each panel and tested in compression at 7 days. The average strength of the cores shall be a minimum of 70 percent of the strengths required in Table I, herein. Testing of cores shall be in accordance with Test Method Tex-424-A.

The Engineer may require additional test panels during the progress of the work if there is any change in materials, equipment or nozzle operator.

Mixing and application may be done by either by the dry mix or wet mix process. The materials shall be thoroughly and uniformly mixed using a mixer designed for use with pneumatic application. It may be either a paddle type or drum type mixer. Transit mix concrete may be used for the wet process.

All mixing and placing equipment shall be cleaned at regular intervals and be kept in acceptable working condition. The nozzle liner, water and air injection system should be inspected daily and replaced when the parts are worn.

431.4. Construction Methods.

(1) Reinforcement. All reinforcement to be embedded in pneumatically placed concrete shall be clean and free from loose mill scale, rust, oil, or other coatings which might prevent adequate bond.

Reinforcement shall be secured rigidly in the position indicated on the drawings. The clear distance between reinforcing bars shall be at least 2-1/2 inches.

Minimum clear distance between forms and reinforcement and for cover shall be as shown on the plans. Space shall be provided for splicing bars in the approved manner.

For repair of structures, welded wire fabric shall be held securely approximately three-fourths of an inch out from the surface to be covered. Adjacent sheets shall lap at least 6 inches and sheets shall be fastened together securely by tying at intervals not to exceed 18 inches. In placing the wire fabric, steel drive pins shall be driven to a penetration of not less than 1 inch or 1/4 inch hook bolts installed in accordance with the manufacturer's recommendation into the face of the designated portions to be covered or repaired. The wire fabric shall be fastened securely to each pin or bolt. Any pin that does not reach the desired depth or hook bolt that does not anchor properly in its hole may remain in place but must be supplemented by an additional pin or bolt installation. The welded wire fabric shall have a minimum of 1 inch cover to the finished concrete surface.

For the encasement of designated portions of steel structures, the welded wire fabric shall be bent to a template to conform as nearly as possible to the outlines of the steel members to be encased. Holes not less than 1/2 inch nor more than one inch in diameter, shall be provided in the webs of the members as near as practicable to the flanges for the purpose of attaching the reinforcing fabric. These holes shall be spaced approximately 3 feet on centers. The welded wire fabric shall be held securely approximately three-fourths of an inch out from the surfaces of the members to be encased. Adjacent sheets shall lap at least 6 inches and sheets shall be fastened together securely by tying at intervals not to exceed 18 inches. In placing the wire fabric, three-eighths of an inch round rods shall be fastened to the structural steel through the holes provided in the webs of the members to be encased and the fabric shall be tied securely outside to rods. Ties shall be spaced approximately 12 inches on centers. The formed fabric shall conform, in so far as possible, to the shape of the structural member.

(2) **Existing Structural Steel.** Pneumatically placed concrete for encasing structural steel shall be Type II unless otherwise designated on the plans. All steel and concrete surfaces shall be cleaned thoroughly of all paint, rust, loose mill scale, grease, and such other foreign materials which are likely to prevent adequate bond between the surface to be encased or covered. Concrete surfaces to be covered with pneumatically placed concrete shall be kept damp a day in advance of application and shall be thoroughly cleaned and washed with water and filtered compressed air just prior to the application.

The encasement concrete shall be given a wood float finish and water cured for 4 days.

(3) **Repair of Existing Concrete.** A Type I mixture shall be used for structure repair. All deteriorated or loose concrete shall be removed from the areas designated to be repaired or restored within the limits specified on the plans or designated by the Engineer. Concrete adjacent to a crack shall be removed in such a manner as to leave the existing reinforcing steel throughout the repair area as intact as possible. Concrete and reinforcing steel surfaces which will be in contact with pneumatically placed concrete shall be sandblasted clean, then the surface cleaned of loose material with filtered compressed air.

Exposed areas are to be sprayed with water, followed with another spraying after ten minutes, then not later than ten minutes after the second water spray, the repair area or the cavity will be filled with pneumatically placed concrete, tying in the wire mesh as required. A steel edged screed shall be used to cut surface to original lines. A steel trowel shall be used for final finish.

For curing, the repair area shall have a piece of wet cotton mat taped into place over the repaired area followed with a covering of 4 mil min. sheet plastic also taped into place. The sheet plastic shall be larger than the mat and shall be continuously taped at the edges with 3 inch min. width tape (air duct tape or better) to completely enclose the mat and hold in the moisture. After four days or longer, the mat and cover may be removed.

After the curing period the patches will be tested by striking with a hammer to check for soundness and bond to existing concrete.

(4) **Riprap and Ditch Lining.** Pneumatically placed concrete for riprap and for channel or canal linings shall be the type designated on the plans. The concrete shall be placed within the limits specified on the plans or as designated by the Engineer. The surface shall be given a wood float finish or a gun finish as directed by the Engineer. Curing of riprap and/or ditch lining shall be by either Type I or II membrane in accordance with the Item, "Membrane Curing".

(5) **Operating Requirements for the Dry Mix Process.** The compressor or blower used to supply air shall be capable of delivering a sufficient volume of oil free air, at a pressure range of 30 to 85 psi as required by the size of the nozzle employed. Required capacity of compressor and operating pressures are shown in Table 2 for the various nozzle sizes. Steady pressure must be maintained throughout the placing process. The water pump shall be of sufficient size and capacity to deliver the water to the nozzle at a pressure of not less than 15 psi in excess of the required air pressure.

Compressor Capacity cu. ft. per Min.	Hose Diameter, inches	Maximum Size of Nozzle Tip, inches	Operating Air Pressure Available, psi
250	1	3/4	40
315	1 1/4	1	45
365	1 1/2	1 1/4	55
500	1 5/8	1 1/2	65
600	1 3/4	1 5/8	75
750	2	1 3/4	85

Table 2
COMPRESSOR CAPACITIES

The values shown in Table 2 are based on a hose length of 150 ft. with the nozzle not more than 25 ft. above the delivery equipment. Operating pressures shall be increased approximately 5 psi for each additional 50 ft. of hose and approximately 5 psi for each 25 ft. the nozzle is raised.

(6) **Operating Requirements for the Wet Mix Process.** The pump shall operate so that the line pressure is between 100 psi and 300 psi for delivery hoses with 1½″ to 3″ diameters. The mixing equipment shall be capable of thoroughly mixing the materials in sufficient quantity to maintain continuous placement. When transit mix concrete is used, this equipment shall conform to the Item, "Ready-Mix Plants".

The use of the wet process will not be permitted for the repair of deteriorated or damaged concrete.

(7) **Rebound.** Rebound material shall not be used.

(8) **Construction Joints.** Particular care shall be given to the formation of construction joints. Unless otherwise noted on the plans, all joints subject to compressive stress or over existing construction joints shall be square butt joints. Tapered joints will be permitted at other locations except the outside 1 inch shall be perpendicular to the surface.

(9) **Placing of Pneumatically Placed Concrete.** Proper consistency shall be controlled at the nozzle valve by the operator for the dry mix process and a low water-cement ratio must be maintained. The consistency of the mix and the water shall be controlled by the mixer pump or by the transit mix truck when used for the wet mix process. The mix shall be sufficiently wet to adhere properly and sufficiently dry so that it will not sag or fall from vertical or inclined surfaces or separate in horizontal work.

When encasing structural steel members or covering portions of structures the concrete may be applied in one coat; however, if the concrete, after being placed, shows any tendency to sag, it shall be applied in two or more coats. Pneumatically placed concrete for overhead work shall be placed in two or more coats as may be necessary to insure proper bond and to eliminate sag. In covering vertical surfaces, placing of the concrete shall begin at the bottom and be completed at the top.

The nozzle shall be held at such distance (2 or 4 feet) and position that the stream of flowing concrete shall impinge as nearly as possible at right angles to the surface being covered. Any deposit of loose sand shall be removed prior to placing any original or succeeding layers of pneumatically placed concrete. Should any deposit of loose sand be covered with pneumatically placed concrete, the concrete shall be removed and replaced with a new coat of pneumatically placed concrete after the receiving surface has been properly cleaned.

Before channel or canal lining or riprap is placed, the earth canal or channel slopes shall have been compacted uniformly and thoroughly and brought to a uniform moist condition. The subgrade for lining shall be excavated and fine graded to the required section. The use of forms for lining will not be required. The surfaces of pneumatically placed concrete for both channel lining and riprap shall be finished accurately by hand floating methods before the concrete has attained its initial set.

The original surface and each surface which is permitted to harden before applying succeeding layers shall be washed with water and air blast, or a stiff hose stream, and loosened material removed. Sand which rebounds and does not fall clear of the work or which collects on horizontal surfaces shall be blown off from time to time to avoid leaving sand pockets. Concrete shall not be applied to a surface containing frost or ice. Where standing or running water is encountered it shall be removed before applying the concrete. No work shall be done without the permission of the Engineer when the temperature is lower than 35 F. After placing, the concrete shall be protected from freezing or quick drying.

(10) Workmen. Only experienced foremen, gunmen, nozzlemen, and rodmen shall be employed and satisfactory written evidence of such experience shall be furnished the Engineer or his representative upon demand.

431.5. Measurement. Measurement of pneumatically placed concrete for encasement of structural steel members will be by the square foot, in place, of the actual contact area.

Measurement of pneumatically placed concrete for repair and restoration of concrete structures, will be by the cubic foot, in place, using the surface area times the average depth of the patch.

Measurement of pneumatically placed concrete for riprap and ditch lining, will be in accordance with the Item, "Riprap".

431.6. **Payment.** Pneumatically placed concrete, measured as provided above, will be paid for at the unit price bid per square foot, or cubic foot for "Pneumatically Placed Concrete", of the type specified.

The unit price bid per square foot or per cubic foot shall be full compensation for all cement, aggregate, water, reinforcement, furnishing and driving all steel drive pins, furnishing and placing expansion bolts, for the removal of deteriorated concrete, for mixing and placing and curing pneumatically placed concrete, and for all labor, tools, equipment, and incidentals necessary to complete the work.

ITEM 432

RIPRAP

432.1. **Description.** This item shall govern the furnishing and placing of riprap of stone or concrete of the type indicated on the plans.

432.2. **Materials.** Stone for riprap shall consist of field stone or rough unhewn quarry stone as nearly uniform in section as is practicable. The stone shall be dense, resistant to the action of air and water, and suitable in all respects for the purpose intended.

The stone used for Common Mortar Riprap may consist of broken up concrete removed under the contract or obtained from other approved sources. Broken concrete shall be as nearly uniform in section as practicable and of the sizes specified in Article 432.8.

Materials for concrete, grout, and mortar shall conform to the requirments of the Item, "Concrete for Structures". Concrete shall be of the class shown on the plans. Mortar and grout required for the several types of riprap shall consist of one part of Portland cement and three parts of sand, thoroughly mixed with water. Mortar shall have a consistency such that it can be easily handled and spread by trowel. Grout shall have a consistency such that it will flow into and completely fill all joints.

Bar reinforcement shall conform to the requirements of the Item, "Reinforcing Steel".

Wire reinforcement shall consist of welded fabric meeting the requirements of ASTM Designation: A 185.

Premolded expansion joint material shall conform to the requirements of the Item, "Concrete Structures".

432.3. **Construction Methods.** The slopes and other areas to be protected shall be dressed to the line and grade shown on the plans prior to the

placing of riprap. For Dry Riprap, Type A and Type B; Grouted Riprap, Type A and Type B; and Mortar Riprap, the stones shall be so placed that the greater portion of their weight is carried by the earth and not by the adjacent stones.

Mortar or Grouted Riprap shall not be placed on embankment slopes until the embankment has been compacted thoroughly.

Spalls and small stones used to fill open joints and voids in stone riprap shall be driven to a tight fit.

432.4. **Dry Riprap, Type A and Type B.** Unless otherwise specified, all stones used in these types of riprap shall weigh between 50 and 150 pounds each, and at least 60 percent of the stones shall weigh more than 100 pounds each. The stones shall be placed in a single layer with close joints. The upright axes of the stones shall make an angle of approximately 90 degrees with the embankment slope. The courses shall be placed from the bottom of the embankment upward, the larger stones being placed in the lower courses. Open joints shall be filled with spalls. Stones of greater dimension than the required riprap thickness shall be embedded in the embankment to present a uniform finished top surface such that the variation between tops of adjacent stones shall not exceed 3 inches. Stones that project more than the allowable amount in the finished work shall be replaced, embedded deeper, or chipped.

Dry Riprap, Type B, differs from Dry Riprap, Type A, only in that a toe wall of concrete, having dimensions and reinforcement as shown on the plans, shall be used.

432.5. **Dry Riprap, Type C and Type D.** Stones having one broad flat surface shall be used when possible; this surface being placed on a horizontal earth bed prepared for it and so placed as to overlap the underlying course, the intent being to secure a lapped or "shingled" surface. Fifty percent of the mass shall be of stones weighing between 100 and 150 pounds each. These stones shall be placed first and roughly arranged in close contact. The spaces between the large stones then shall be filled with stone of suitable size so placed as to leave the surface evenly stepped, conforming to the contour required, and capable of shedding water to the maximum degree practicable.

Dry Riprap, Type D, differs from Dry Riprap, Type C, only in that a toe wall of concrete, having dimensions and reinforcement as shown on the plans, shall be used.

432.6. **Grouted Riprap, Type A and Type B.** Stones used in these types of Riprap shall weigh between 40 and 150 pounds each. The stones shall be placed in the same manner as specified above for Dry Riprap, Type A and

Type B with care being taken to prevent earth or sand from filling the spaces between the stones. After the stones are in place, the stones shall be wetted thoroughly and the spaces between the stones shall be completely filled with grout. The surface of the Riprap shall be swept with a stiff broom after grouting. No Riprap shall be grouted in freezing weather. The work shall be protected from the sun and kept moist for at least 3 days after grouting.

Grouted Riprap, Type B, shall have a concrete toe wall as specified for Dry Riprap, Type B.

432.7. Mortar Riprap. Stone for this purpose, as far as practicable, shall be selected as to size and shape in order to secure fairly large, flat-surfaced stone which may be laid with a true and even surface and a minimum of voids. Fifty percent of the mass shall be broad flat stones, weighing between 100 and 150 pounds each, placed with the flat surface uppermost and parallel to the slope. The largest stones shall be placed near the base of the slope. The spaces between the larger stones shall be filled with stone of suitable size, leaving the surface smooth, reasonably tight, and conforming to the contour required. In general, the stones shall be placed with a degree of care that will insure for plane surfaces a maximum variation from the true plane of not more than 3 inches in 4 feet. Warped and curved surfaces shall have the same general degree of accuracy as specified for plane surfaces.

Before placing mortar, the stones shall be wetted thoroughly, and as each of the larger stones is placed, it shall be surrounded by fresh mortar and adjacent stones shall be shoved into contact. After the larger stones are in place, all of the spaces or openings between them shall be filled with mortar and the smaller stones then placed by shoving them into position, forcing excess mortar to the surface and insuring that each stone is carefully and firmly embedded laterally. After the work has been completed as described above, all excess mortar forced up shall be spread uniformly to completely fill all surface voids. All surface joints then shall be pointed up roughly either with flush joints or with shallow, smooth raked joints.

432.8. Common Dry Riprap and Common Mortar Riprap. The stones for this type shall be not less than one-third of a cubic foot in volume and not less than 3 inches in least dimension. The width of the stone shall not be less than twice the thickness.

Prior to placing the stones, a suitable bed shall be excavated for the base course or layer. The material secured by excavation shall be used in dikes or dams around the end of the walls or uniformly spread on embankment slopes. The base course or layer of stone shall be bedded well into the ground with their edges in contact. Each succeeding course or layer shall be well bedded into and placed on even contact with its preceding course or

layer. The finished surface shall present an even, tight surface true to line and grades of typical sections.

Sufficient mortar shall be used in Common Mortar Riprap to fill completely all voids in the layers of stone, and surface shall be swept with a stiff broom. Grout may be used in lieu of mortar. Spalls and small stones used to fill open joints and voids in Common Dry Riprap shall be driven to a tight fit.

432.9. Concrete Riprap. Concrete for riprap shall be placed in accordance with the details and to the dimensions shown on the plans or as established by the Engineer. Unless otherwise shown by a note on the plans, concrete riprap shall be reinforced using wire or bar reinforcement.

The class of concrete shall be specified on the plans and shall be in accordance with the Item, "Concrete for Structures".

If wire reinforcement is used, it shall be a 6 by 6 inch No. 6 plain electric welded reinforcing fabric or its equal. A minimum lap of 6 inches shall be used at all splices. At the edge of the Riprap, the wire fabric shall not be less than 1 inch nor more than 3 inches from the edge of the concrete and shall have no wires projecting beyond the last member parallel to the edge of the concrete.

If bar reinforcement is used, the sectional area of steel in each direction shall not be less than the sectional area of the wire fabric described above. The spacing of bar reinforcement shall not exceed 18 inches in each direction and the distance from the edge of concrete to the first parallel bar shall not exceed 6 inches.

Reinforcement shall be supported properly throughout the placement to maintain its position approximately equidistant from the top and bottom surface of the slab.

If the slopes and bottom of the trench for toe walls are dry and not consolidated properly, the Engineer may require the entire area to be sprinkled, or sprinkled and consolidated before the concrete is placed. All surfaces shall be moist when concrete is placed.

After the concrete has been placed, compacted and shaped to conform to the dimensions shown on the plans, and after it has set sufficiently to avoid slumping, the surface shall be finished with a wooden float to secure a reasonably smooth surface.

Immediately following the finishing operation the riprap shall be cured in accordance with the Item, "Concrete Structures".

432.10. Pneumatically Placed Concrete Riprap, Type II and Type III. Pneumatically placed concrete for riprap shall be placed in accordance with the details and to the dimensions shown on the plans or as established by the Engineer. Pneumatically placed concrete shall conform to the re-

quirements of the Item, "Pneumatically Placed Concrete". Reinforcement shall conform to the details on the plans and with the Item, "Reinforcing Steel". Reinforcement shall be supported properly throughout placement of concrete. All subgrade surfaces shall be moist when concrete is placed.

The surface shall be given a wood float finish or a gun finish as directed by the Engineer.

The strength and design of Pneumatically Placed Concrete Riprap shall be specified on the plans as either Type II or Type III in accordance with the Item, "Pneumatically Placed Concrete".

Immediately following the finishing operation, the riprap shall be cured with membrane curing compound in accordance with the Item, "Concrete Structures".

432.11. **Cement Stabilized Riprap, Type M and Type N.** These classes of riprap shall conform to the requirements of the plans and to the regular concrete riprap specified in Article 432.9. above, with the following exceptions:

The aggregate for this riprap shall be the processed material used on the roadway as flexible base. The processed material and design of the concrete shall be specified by the Engineer.

Any royalty costs for the material to be used as aggregate shall be included in the unit price bid for riprap.

Type M riprap shall be 4 sack concrete.

Type N riprap shall be 3 sack concrete.

Immediately following the finishing operation, the riprap shall be cured in accordance with the Item, "Concrete Structures".

432.12. **Measurement.** Measurement of acceptable riprap complete in place will be made on the basis of the area actually covered, and the volume will be computed on the basis of the measured area and the thickness specified on the plans.

Concrete in toe walls will be measured as riprap of the type with which it is placed.

432.13. **Payment.** The riprap quantities, measured as provided above, will be paid for at the unit prices bid per cubic yard for riprap of the various classifications shown, which price will be full compensation for furnishing, hauling, and placing all materials including reinforcement and premolded expansion joint material, and for all labor, tools, equipment, and incidentals necessary to complete the work.

Payment for excavation of toe wall trenches and for all necessary excavation below natural ground or bottom of excavated channel will be included in the unit price bid per cubic yard of riprap.

Payment for all necessary excavation for riprap below natural ground or bottom of excavated channel, and for shaping of slopes for riprap will be included in the unit price bid per cubic yard for riprap, except that when the header banks upon which riprap is to be placed were built by prior contract, the excavation required for shaping of slopes will be paid for in accordance with the Item, "Structural Excavation".

ITEM 433

POLYURETHANE JOINT SEAL

433.1. Description. This item shall govern for the furnishing and placing of a polyurethane base joint sealing compound in joints designated on the plans as PUJS.

433.2. Materials. The sealant shall be a polyurethane base, two-component, cold applied joint sealing compound suitable for sealing horizontal joints in concrete slabs. The sealant shall be a two-package system consisting of a base compound and an accelerator compound. The two components shall be easily identifiable by color difference which also aids in showing proper mixing. When properly mixed as packaged, the sealant shall convert to a rubber like compound meeting the requirements specified herein. If primers are recommended by the manufacturer, they will be required and shall be used in testing and in construction.

The sealant shall be Machine Extruded type.

433.3. Test Requirements. When tested in accordance with Test Method Tex-525-C, the sealer shall meet the following requirements:

The sealer shall be of such consistency that it can be extruded into a sloping joint in one operation without excessive flow.

Stability when stored for six months at temperature not exceeding 80 F	Continue to pass other requirements
Mixing Ratio	Equal parts base and accelerator
Viscosity of individual components at 77 F ± 2 F, Poises	50 Minimum 750 Maximum

Viscosity of sealer, based on volume ratio of components Poises	50 Minimum 500 Maximum
Application life at 77 F ± 2 F, and 50 ± 5 % relative humidity after proper mixing	3 minutes, minimum 10 minutes, maximum
Tack Free Time, Hours	24 Maximum
Weight Loss after heat aging, Percent	10 Maximum
Compression Set, Percent	15 Maximum
Resilience at 77 F, Percent	80 Minimum
Resilience after heat aging, Percent	80 Minimum
Initial Adhesion - 150% extension (1/2″ to 1 1/4″)	
Normal Curing	Pass*
Rapid Curing	Pass*
Adhesion after water immersion	Pass*
Adhesion after heat aging	Pass*
Adhesion after cycling at -20 F	Pass*

*Tensile force at 150 percent extension shall be not less than 8 psi nor more than 75 psi. There shall be no evidence of crack, separation or other opening that at any point is over 1/8 inch deep in the sealer or between the sealer and test blocks.

433.4. **Construction Methods.** The bonding surface of joints shall be cleaned free of laitance, concrete, paint, corrosion, mill scale, oil or grease by sandblasting prior to application of the primer. Metal surfaces shall be given a class "A" blast cleaning in accordance with the Item, "Cleaning, Paint and Painting". After sandblasting, the joint shall be blown out to remove all loose dust.

Priming of surfaces for proper bond and materials for priming shall be as recommended by the sealant manufacturer. The primer shall be applied

to metal surfaces soon after cleaning and before new corrosion begins and shall be allowed to dry a minimum of 30 minutes but not more than eight hours before applying the sealant.

In open type joints, a backing shall be provided to hold the fluid sealant in place. Backing shall be a compressible type material such as closed-cell, resilient foam or sponge rubber stock of vinyl, butyl or neoprene; or, expanded polyethylene or polyurethane. In all cases, bond must be broken between the backing and sealant.

The depth of the sealant shall conform with Table 1. The top surface of the sealant shall be approximately 1/4 inch below the top of the joint.

Joint Opening	1/2" to 1"	1 1/4"	1 1/2"
Depth of Sealant	1/2"	5/8"	3/4"

Table 1

The sealant shall be placed in the open joint to the depths required in Table 1, in one pass so that it will flow and level out to a smooth surface across the joint. The sealant shall be of such consistency that it can be placed into a sloping joint without excessive flow down the cross slope of the structure.

433.5. Measurement and Payment. No direct measurement or payment will be made for the materials, work to be done or equipment to be furnished under this item, but it shall be considered subsidiary to the particular items required by the plans and the contract.

ITEM 434

SLIDING ELASTOMERIC BEARINGS

434.1. Description. This item shall govern for the furnishing and installation of sliding elastomeric bearings in accordance with the details shown on the plans and the requirements of these specifications. These bearings consist of a steel plate with a stainless steel facing bearing on a preformed fabric pad to which is bonded a layer of PTFE material.

434.2. Materials. Unless otherwise shown on the plans, steel plates shall be ASTM Designation: A 36, finished to ANSI #500 or better on the innerface. Stainless steel sheet shall be Type AISI 304 conforming to ASTM Designation: A 240. The thickness shall not be less than 20 gage (0.0375 inch nominal). Alternately the steel plate and stainless facing may be Type 304 stainless clad A 36 steel subject to weldability requirements. The thickness of cladding shall be no less than 20 gage (0.0375 inch nominal). Whether faced or clad, the finished stainless surface shall be flat

to a tolerance of one thirty-second of an inch and shall be polished sufficiently to meet the friction requirements of this item.

Preformed fabric pads shall be manufactured of all new (unused) materials and composed of multiple layers of prestressed duck, 64 plies per inch of finished pad thickness, impregnated and bound with a high quality rubber compound, containing rot and mildew inhibitors and antioxidants, compounded into resilient pads of uniform thickness. The Shore Durometer hardness of the pad shall be not less than 85 nor more than 95. Pads without the PTFE layer shall be capable of withstanding 10,000 psi compressive stress without breakdown. A tolerance of plus or minus five percent will be allowed from the pad thickness shown on the plans.

The PTFE materials shall be pure virgin polytetrafluoroethylene fluorocarbon resin, unfilled, or with a suitable inert filler and/or reinforcement to minimize the cold flow tendencies while maintaining the friction properties of the PTFE fluorocarbon resin. The amount of filler by weight of filled PTFE sheet shall be no less than 10 percent nor more than 35 percent. The finished materials shall exhibit the following physical properties:

Requirement	Test Method	Filled Value	Unfilled Value
Hardness at 78 F	ASTM D 2240, Shore "D"	50-60	50-65
Tensile Strength psi	ASTM D 1457	2,000 min	2,000 min
Elongation, Percent	ASTM D 1457	150 min	200 min
Deformation Under Load Percent - 73.4 F - 2,000 psi	ASTM D 621, Method A	10 max	15 max
Specific Gravity	ASTM D 1457	2.16 min	2.14 min

The thickness of the finished PTFE sheet shall not be less than one thirty-second of an inch nor more than one-eighth of an inch.

434.3. Manufacturing Processes. The stainless steel sheet shall be attached to the steel plate by epoxy bonding. Extreme care shall be exercised in the preparation of the contact surfaces and control of the bonding operation. The bonding agent shall be a high temperature epoxy meeting the following requirements, or a proven equal:

Requirement	Test Method	Minimum Value
Flexural Modulus	ASTM D 790	2×10^4 psi
Safe Operating Temperature		-60 C to 145 C
Linear Expansion Coefficient	ASTM D 696	4.8×10^{-5}
Bond Strength (Tensile Shear 77 F)	ASTM D 1002	1,000 psi

In addition to bonding, the corners of the stainless sheets, and the edges if necessary, shall be secured to the plate with positive mechanical means such as spot welding studs, rivets or metal screws, capable of resisting, in shear, .04 times the vertical load capacity of the bearing without interfering with the sliding surface.

Alternatively, if the stainless steel sheet is 16 gage (0.0625 inch nominal) or greater in thickness it may be secured to the plate by continuous fillet welding all around the edges.

The PTFE material shall be bonded to the preformed fabric pad using approved adhesive methods or by vulcanizing through an appropriate polychoroprene interlayer.

434.4. Testing and Acceptance. One extra bearing from each project shall be manufactured for testing purposes. As soon as all bearings have been manufactured for a given project, notification shall be given to the Materials and Tests Engineer, 38th and Jackson Streets, Austin, Texas 78703, who will select the above prescribed test bearing at random from the lot. Testing performed by the Department will be in accordance with procedures published in the Manual of Testing Procedures and/or other applicable test procedures. Manufacturer's certification that the steel, preformed fabric and PTFE material meets the requirements given under "Materials", above, shall be furnished along with notification of fabrication completion.

Load specimens will consist of a bottom pad at least 4 by 4 inches, but preferable the length of the actual pad in the direction parallel to the girder and at least 4 inches wide with a compatible size of top plate. This specimen will be loaded with 1,000 psi compression and subjected to 100 slow cycles of 1 inch horizontal movement each way from center. The average coefficient of friction shall be .08 or less and the bearing shall show no appreciable signs of bond failure or other defect. The test bearing will be cut if necessary to provide load specimens.

Adhesion between the PTFE and preformed fabric will be measured on a 3″ x 4″ specimen using a stripping test similar to A.S.T.M D 429, Method B. The minimum peel strength shall be 25 lbs per in.

If deemed necessary by the Engineer, check tests will be performed on the steel, preformed fabric pads or PTFE material to verify the properties required under "Materials" and certified by the manufacturer.

Bearings represented by test specimens passing the above requirements will be approved for use in the structure subject to on-site inspection by the Engineer for visible defects.

434.5. Measurement. Sliding elastomeric bearings will be measured by each sliding elastomeric bearing of the type shown on the plans. Unless

otherwise shown on the plans, this will include the stainless steel faced plate and the PTFE faced preformed fabric pad, and will include the sole plates and anchor bolts required to connect the bearing between superstructure and substructure.

434.6. **Payment.** Payment for sliding elastomeric bearings, measured as specified above will be at the unit price bid for each "Sliding Elastomeric Bearing" of the type specified. This price shall be full compensation for all materials, tools, equipment, labor, and for all incidentals necessary to complete the work.

ITEM 435
ELASTOMERIC MATERIALS

435.1. **Description.** This item shall govern for the materials, testing, fabrication and placement of elastomeric materials, except as otherwise covered in other specifications or on the plans.

435.2. **Materials.**

(1) **Elastomeric Bearings.** When specified on the plans, structural members shall be seated on elastomeric bearings.

These bearings may be either "plain" (consisting of elastomer only) or "laminated" (consisting of alternating individual layers of elastomer and non-elastic laminates) as shown on the plans. Elastomeric bearings shall be specified on the plans by hardness (durometer), size and configuration and, in the case of laminated bearings, by the thickness of the individual layers of elastomer and the size and position of special connection members, if any, required to be vulcanized with the bearing.

(a) **General.** Unless otherwise shown on the plans, the elastomer for bearings shall be formulated from previously unvulcanized 100 percent virgin polychloroprene or 100 percent virgin polyisoprene rubber polymers. Rubber like polymers employed in the elastomer formulation shall be exclusively of the polychloroprene or natural polyisoprene type. Bearings will not be acceptable if the elastomer employed contains previously vulcanized rubber (natural or synthetic) or other synthetic rubber like polymers.

Non-elastic laminates shall be one-sixteenth of an inch (-0 inch, + 1/16 inch) thick steel strip or sheet. Metal for special connections including sole plates and bearing plates, shall conform to ASTM Designation: A 36, unless otherwise shown on the plans.

(b) **Physical Properties of the Elastomer.** Elastomer formulated from polychloroprene shall meet the requirements shown in Table A. Elastomer

formulated from polyisoprene shall meet the requirements of Table B. Material tests shall be made in accordance with the test methods stipulated except that all tests shall be made on the finished product and standard laboratory test slabs will not be utilized for this purpose. The values shown in Tables A and B pertain to tests performed on samples taken from the finished product. The apparatus employed in preparing test specimens from the finished product shall be in accordance with ASTM Designation: D 15, as pertains to "Sample Preparation for Physical Testing of Rubber Products".

Compression set test specimens shall be taken from the finished product. In bearing thicknesses exceeding one half of an inch or elastomer layers in laminated bearings exceeding one half of an inch, the full thickness of the bearing or elastomer layer shall be utilized. The 25 percent compression shall be employed and obtained through the utilization of appropriate thickness of spacer bars and/or shims. Beveled or wedge shaped bearings of elastomer layers in laminated bearings shall have the compression set specimens selected from sections of the bearings or layers which have been properly cut or ground so that the top and bottom surfaces of the circular compression set specimens will have essentially parallel surfaces. The maximum permissible thickness of such bearings or layers, after rendering the upper and lower surfaces parallel, will be used as a source for the cutting of the cylindrical test specimens employed in the compression set test in accordance with ASTM Designation: D 395, as modified herein.

(c) **Formulation Pre-Qualification and Certification.** All bearings furnished by the Contractor shall be produced by a bearing manufacturer who has previously submitted the required pre-qualification test samples and certifications and whose elastomer formulation has been initially approved for use by the Engineer. Each elastomer formulation produced by a manufacturer must be approved by the Engineer prior to its first use on Department projects. To pre-qualify and obtain initial approval of a particular formulation, the bearing manufacturer shall submit to the Engineer, well in advance of anticipated use of his product, certified test results showing actual test values obtained when the physical properties of the elastomer to be furnished were tested for compliance with the pertinent specifications.

In addition, the manufacturer shall forward pre-qualification test samples, freight prepaid, to the Materials and Tests Engineer, 38th and Jackson Streets, Austin, Texas 78703, for testing and evaluation of compliance with pre-qualification requirements. These pre-qualification samples shall consist of at least two finished bearings typical of the formulation and workmanship intended for use on Departmental projects. When both laminated and plain bearings are required, two samples of each type shall be submitted. Plain sample bearings shall measure 9 inches x 19 inches by 1 inch, 70 Durometer; laminated sample bearings shall be 9 inches

x 14 inches x 1½ inches, 60 durometer, with two steel laminates of commercial grade steel 1/8 inch in thickness. Only elastomer of the type or types to be supplied shall be submitted, (polychloroprene, polyisoprene).

The bearing manufacturer shall certify that all of the samples submitted are of the same basic elastomer formulation and of equivalent cure to that used in the finished products to be furnished on Department projects.

The Producer may be required to perform the complete pre-qualification testing procedure again during later production should the Engineer feel such action appropriate.

(d) Manufacturing Requirements. All components of a "laminated" bearing shall be molded together to form an integral unit free of voids or separations in the elastomer or between the elastomer and the non-elastic laminates or special connections unless specifically required or permitted by the plans or these specifications. The elastomer between the laminates or special connections and on the outer surfaces of the bearing shall be well-vulcanized, uniform and integral such that it is incapable of being separated by any mechanical means into separate, definite, well-defined elastomeric layers. Evidence of this layered construction, either at the outer surfaces or within the bearing, shall be cause for rejection of such laminated bearing shipments.

All edges of non-elastic laminates shall be covered by a minimum of one-eighth of an inch of elastomer except that exposure of the laminates will be permitted at approved laminate restraining devices and around holes that will be entirely enclosed in the finished structure. Unless otherwise shown on the plans, all laminates shall be parallel with the bottom surface of the bearing, subject to the tolerances that follow.

Plain bearings may be molded individually, cut from previously molded strips or slabs molded to the full thickness of the finished bearings, or extruded and cut to length. The finished bearings shall have no voids or separations detectable either at the bearing surfaces or within the bearing unless specifically required or permitted by the plans or this specification. Plain elastomeric bearings shall be well-vulcanized, uniform and integral units of such construction that the bearing is incapable of being separated by any mechanical means into separate, definite and well-defined elastomeric layers. Evidence of layered construction either at the outer surfaces or within the bearing shall be cause for rejection of such bearing shipments.

Hardness (Durometer)	50	60	70	80	90
ORIGINAL PHYSICAL PROPERTIES					
Hardness ASTM D 2240, Ty A Durometer	50 ± 5	60 ± 5	70 ± 5	80 ± 5	90 ± 5
Tensile Strength, minimum psi ASTM D 412	2250	2250	2250	1800	1800
Elongation at Break, minimum percent	405	360	270	135	90
ACCELERATED TESTS TO DETERMINE LONG TERM AGING CHARACTERISTICS OVEN AGED 70 HR AT 212 F ASTM D 573					
Hardness, points change, maximum	0 to +15	0 to +15	0 to +15	0 to +15	0 to +15
Tensile Strength, % change maximum	-15	-15	-15	-15	-15
Elongation at Break, % change maximum	-40	-40	-40	-40	-40
OZONE 100 PPHM IN AIR BY VOLUME 20% STRAIN AT 100 F 1 ASTM D 1149* 100 Hours	No Cracks	No Cracks	No Cracks	No Cracks	No Cracks
COMPRESSION SET 22 HR AT 158 F ASTM D 395 (Method B)** % Maximum	25	25	25	25	25
LOW TEMPERATURE RESISTANCE ASTM D 746, PROCEDURE B Brittleness, at -26 C	No Failure	No Failure	No Failure	No Failure	No Failure

ADHESION (PREQUALIFICATION ONLY)
For laminated bearings, bond between the elastomer and laminates will be qualitatively evaluated by the procedure outlined in the THD Manual of Testing Procedures, Test Method Tex-601-J.

* Samples to be solvent wiped before test to remove traces of surface impurities.

** Modified in that test is performed on specimens of essentially full bearing or layer thickness with the 25 percent compression obtained through the use of appropriate spacer bars and/or shims

TABLE A

Interpolate Between Values Shown for Other Hardness Values

Hardness (Durometer)	50	60	70	80	90
ORIGINAL PHYSICAL PROPERTIES					
Hardness ASTM D 2240, Ty A Durometer	50 + 5	60 + 5	70 + 5	80 + 5	90 + 5
Tensile Strength, minimum psi ASTM D 412	2250	2250	2250	1800	1800
Elongation at Break, minimum percent	405	360	270	135	90
ACCELERATED TESTS TO DETERMINE LONG TERM AGING CHARACTERISTICS OVEN AGED 70 HR AT 158 F ASTM D 573					
Hardness, points change, maximum	0 to +10	0 to +10	0 to +10	0 to +10	0 to +10
Tensile Strength, % change, maximum	-25	-25	-25	-25	-25
Elongation at Break, % change maximum	-25	-25	-25	-25	-25
OZONE 25 PPHM in AIR BY VOLUME 20% STRAIN AT 100 ± 2 F ASTM D 1149* 48 Hours	No Cracks	No Cracks	No Cracks	No Cracks	No Cracks
COMPRESSION SET 22 HR AT 158 F ASTM D 395 (Method B)** % Maximum	25	25	25	25	25
LOW TEMPERATURE RESISTANCE ASTM D 746, PROCEDURE B Brittleness, at -26 C	No Failure	No Failure	No Failure	No Failure	No Failure
ADHESION (PREQUALIFICATION ONLY)					

For laminated bearings, bond between the elastomer and laminates will be qualitatively evaluated by the procedure outlined in the THD Manual of Testing Procedures, Test Method Tex-601 J.

* Samples to be solvent wiped before test to remove traces of surface impurities

** Modified in that test is performed on specimens of essentially full bearing or layer thickness with the 25 percent compression obtained through the use of appropriate spacer bars and/or shims

TABLE B

Interpolate Between Values Shown for Other Hardness Values

The finish of cut surfaces shall be ANSI Number 250, or smoother. The batch or lot number and the dimensions or piece mark shall be marked on each bearing and they shall remain legible until placement in the structure.

(e) Appearance and Dimensions. Flash tolerance, finish and appearance shall meet the requirements of the latest edition of the Rubber Handbook as published by the Rubber Manufacturers' Association, Inc.; RMA-F3-T.063 for molded bearings and RMA-F2 for extruded bearings.

For both plain and laminated bearings the permissible variation from the dimensions and configuration required by the plans and these specifications shall be as follows:

1. Overall Vertical Dimensions
   Average Total Thickness 1¼″ or less . . . . . -0,+1/8″
   Average Total Thickness Over 1¼″ . . . . . -0,+1/4″
2. Overall Horizontal Dimensions . . . . . -0,+1/4″
3. Thickness of Individual Layers of
   Elastomer (Laminated Bearings Only) . . . . . ±1/8″

4. Variation from a Plane Parallel to the Theoretical Surface

Top	1/8″
Sides	1/4″
Individual Non-Elastic Laminates (As determined by measurements at the edges of the bearing)	1/8″

5. Position of Exposed Connection Members	1/8″
6. Edge Cover of Embedded Laminates or Connection Members	-0, + 1/8″
7. Size of Holes, Slots or Inserts	-0,+1/8″
8. Position of Holes, Slots or Inserts	-0,+1/8″
9. Thickness of Non-Elastic Laminates	-0,+1/16″

(f) **Routine Inspection, Sampling and Testing.** After prequalification approval, the inspection, sampling and testing of actual bearing production will be as outlined below:

Plain Bearings. A minimum of one plain bearing will be taken by a representative of the Materials and Tests Division from each project or from each batch or lot in case the same batch or lot is used for more than one project. Routine tests for compliance with the requirements of Table A or Table B, whichever is applicable, will be performed by the Materials and Tests Division. Samples will not be returned.

Laminated Bearings. Each laminated bearing shall be subjected, by the manufacturer, to an average compression of 1,000 psi or to lower average compression if so indicated in the plans or approved by the Engineer. This compression test will be performed in the presence of a representative of the Materials and Tests Division who will perform visual inspection and accept or reject the bearings at that time. The performance of each bearing will be considered satisfactory provided there is no visible evidence of bond failure or other damage to the bearing because of this loading and provided the finished bearing meets all other pertinent portions of this specification. Samples of laminated bearings may be taken if the quality of the plant production becomes questionable. If samples are taken, they shall be taken and tested as outlined for plain bearings.

The manufacturer shall furnish certified laboratory test results on the elastomer properties of each batch or lot of compound used in the manufacture of bearings, both plain and laminated.

(2) **Waterstops.** Waterstops shall be furnished and installed in accordance with the details shown on the plans. Except where otherwise indicated on the plans, waterstops may be manufactured from either natural

(plain) or synthetic rubber or from polyvinyl chloride (PVC) as specified below:

(a) Materials.

1. Natural (plain) rubber waterstops shall be manufactured from a stock composed of a high-grade compound made exclusively from new plantation rubber, reinforcing carbon black, zinc oxide, accelerators, anti-oxidants and softeners. This compound shall contain not less than 72 percent by volume of new plantation rubber.

2. Synthetic rubber waterstops shall be manufactured from a compound made exclusively from neoprene or GRS, reinforcing carbon black, zinc oxide, polymerization agents and softeners. This compound shall contain not less than 70 percent by volume of neoprene or GRS.

3. Physical properties of natural or synthetic rubbers for waterstops shall be as shown in Table C below:

	Natural (Plain) Rubber	Synthetic (Neoprene GRS) Rubber
Original Physical Properties:		
Hardness ASTM D 676 (Durometer)	60±5	55±5
Tensile Strength, Minimum psi ASTM D 412	3500	2500
Elongation at Break, Minimum percent	550	425
Accelerated Tests to Determine Aging Characteristics:		
either – after 7 days in air at 158 (±2)F (ASTM D 573)		
or – after 48 hours in oxygen (ASTM D 572) at 158 (±2)F and 300 psi pressure Tensile Strength, % change, Maximum	35	35
Elongation, % change, Maximum	35	--

Table C
Physical Properties for Rubber for Waterstops

4. Polyvinyl Chloride (PVC). Unless otherwise specified on the plans, the material shall conform to the Corps of Engineers Specification Number, CRD-C-572-60.

(b) Manufacturer's Certification. The manufacturer shall furnish certified test results, indicating compliance with this specification, for each batch or lot of waterstop furnished under this contract. In case of doubt of

the quality furnished, the burden of proof shall be on the manufacturer, and the decision of the Engineer shall be final.

(c) **Manufacturing Requirements.**

1. **Rubber Waterstops.** Waterstops shall be manufactured with an integral cross section which shall be uniform within plus or minus one-eighth of an inch in width, and the web thickness or bulb diameter, within plus one-sixteenth and minus one-thirty-second of an inch. No splices will be permitted in straight strips. Strips and special connection pieces shall be well cured so that any cross sections shall be dense, homogeneous and free from all porosity. All junctions in the special connection pieces shall be full-molded. During the vulcanizing period the joint shall be securely held by suitable clamps.

2. **PVC Waterstops.** Requirements shall be as in 1. above for rubber waterstops except that splicing of PVC shall be done by heat sealing the adjacent surfaces in accordance with the manufacturer's recommendations. A thermostatically controlled electric source of heat shall be used to make all splices. The heat shall be sufficient to melt but not to char the plastic.

(3) **Elastomeric Pads.** When so specified on the plans, rail posts, rail members, metal shoes or minor structural members shall be insulated, leveled, shimmed or otherwise protected by elastomeric pads, sheets or washers.

Such bearings may be any elastomeric material, plain, fibered or laminated, having a hardness (durometer) between 70 and 100 as certified by the manufacturer to the Engineer.

Acceptance testing will not be required.

(4) **Other Elastomeric Products.** Other elastomeric products shall be in accordance with the requirements on the plans.

435.3. Construction Methods.

(1) **Elastomeric Bearings.** Unless otherwise shown on the plans, concrete bearing seats shall be float finished to the required elevation. Variation from a level plane shall not exceed one-sixteenth of an inch within the limits of the bearing.

After erection of members on steel structures only, the horizontal distortion of the bearings shall be measured, corrected for temperature and adjusted, if necessary, so that the horizontal displacement between top and bottom of bearing at 70 F does not exceed 15 percent of the elastomer thickness.

Welding in the vicinity of the bearings shall be done with care to avoid injury to the elastomer.

(2) **Waterstops.** Field splices shall be either vulcanized; mechanical, using stainless steel parts; or made with a rubber splicing union of the same stock as the waterstop, at the option of the Contractor. All finished splices shall have a tensile strength not less than 50 percent of the unspliced material.

435.4. **Measurement.** Unless otherwise specified on the plans, elastomeric bearings used with prestressed concrete units, and other miscellaneous elastomeric materials will not be measured for payment but will be considered subsidiary to the various pertinent bid items in the contract.

Unless otherwise specified on the plans, elastomeric bearings used in conjunction with steel superstructures will be measured by each elastomeric bearing of the type shown on the plans.

435.5. **Payment.** Payment for elastomeric bearings, measured as specified above, will be at the unit price bid for each "Elastomeric Bearing" of the type specified. This price shall be full compensation for all materials, tools, equipment, labor, and for all incidentals, including anchor bolts and top plates, necessary to complete the work.

ITEM 436

PREFORMED JOINT SEAL

436.1. **Description.** This item shall govern for the furnishing and installation of preformed materials, designated on the plans as PJS, to be placed in armored bridge deck joints for the purpose of preventing the passage of water and other materials through the joint.

436.2. **Materials.** The joint seal shall be an extruded, multi-channeled, elastomeric shape conforming to ASTM Designation: D 2628, modified in accordance with Test Method Tex-613-J, and the requirements of this Item. The size shown on the plans shall be the nominal width of the seal. The uncompressed depth of the seal shall be equal to or greater than the width. In addition to the tests prescribed by ASTM Designation: D 2628, the seal shall be subjected to further testing as required.

Unless otherwise shown on the plans, and when tested in accordance with Test Method Tex-613-J, the pressure measured shall be no less than 3 psi at 85 percent, nor more than 100 psi at 50 percent of the nominal width.

Lubricant-adhesive shall be a one part moisture curing polyurethane and hydrocarbon solvent mixture with the following physical properties:

Average net weight per gallon	8.00 pounds±10 percent
Solids content	65 - 74 percent by weight
Adhesive to remain fluid from	5 F to 120 F
Film strength (ASTM D 412)	1200 psi
Elongation	350 percent

The Manufacturer shall furnish certification as to the compliance with these physical requirements.

436.3. Pre-qualification. All joint seals installed by the Contractor shall have been pre-qualified for compliance with the requirements of these specifications. Each size and configuration of seal produced by a manufacturer must be approved by the Engineer prior to use on Department projects. For a seal manufacturer to pre-qualify and obtain approval of a seal, he shall submit to the Engineer, well in advance of anticipated use of his product, detailed dimensions and configuration of each size of seal and certified test results indicating actual test results in compliance with ASTM Designation: D 2628, and the further requirements of the plans and specifications.

In addition, the manufacturer shall forward pre-qualification test samples, freight prepaid, to the Materials and Tests Engineer, 38th and Jackson Streets, Austin, Texas 78703. Samples shall consist of at least six feet of each size and configuration for which approval is requested.

436.4. Inspection and Testing. After pre-qualification approval, the Engineer shall confirm by visual inspection that the seal proposed for installation is the same size, configuration and manufacture as pre-qualified. In addition, the Engineer shall examine the seal for any undue distortions such as dissymmetry, warping, thick webs or uneven width which are likely to impair the performance of the joint. If the magnitude of the distortions are sufficient to create doubt as to the performance of the seal, the Engineer may direct that the seal be replaced or that samples representing the worst of the lot be subjected to further testing to verify their performance.

In addition, at least one seal of each size furnished for a given project shall be furnished with a minimum of 3 feet extra length. These extra lengths shall be removed at the job site and forwarded to the Materials and Tests Division for confirmation of the physical properties of the elastomer and such other check tests as may be necessary.

436.5. Construction Requirements. Just prior to installing the seal, the joint faces shall be abrasive blast cleaned, blown out with high pressure air and lubricant adhesive applied to the joint faces. The sides of the seal shall be cleaned with xylol solvent, lubricant adhesive applied to the sides and installed into the joint opening with an approved compression installation

tool as recommended by the manufacturer, or equal. Installation by hammering, use of sharp tools or stretching of the seal will not be permitted.

The Contractor shall furnish the fabricator of the armor joint with the actual depth of the seal to be furnished so that the stop for the bottom of the seal will be placed at the correct position (actual depth plus one inch). In no case shall the top of the seal, after installation, be closer than one-half of an inch to the roadway surface.

The seal shall be installed in the joint in one continuous piece for the full joint, including vertical and horizontal angle changes. One shop splice for each 40 feet of length will be permitted but no field splice will be allowed. Failure of a splice at any time prior to final acceptance of the work will be cause for rejection and replacement of the entire seal. The bottom portion of the seal may be cut or portions removed to facilitate vertical bending only. Any authorized cutting shall be to smooth lines and rounded curves. The word TOP shall be printed on each seal at intervals not to exceed 25 feet.

Uniform joint openings of the proper width and with parallel joint faces shall be provided. Joint openings shall be adjusted for the difference between 70 F and the temperature of the superstructure at the time the opening is set. The amount of adjustment shall be approximately one-sixteenth of an inch per 10 F temperature difference per 90 feet of length expanding through the joint. Adjustments in joint opening shall not be made for reasons other than temperature at setting.

436.6. **Measurement.** For each size of seal specified, measurement will be made by the linear foot, along the centerline of the joint and at the surface of the roadway, curb, sidewalk and up the roadway surface of required parapet type rail walls to the end of the seal as indicated on the plans.

When field measurement is required by Article 436.7. measurement will be made in place as prescribed above. If no adjustment is required under Article 436.7. no additional measurement or calculations will be made.

In the event of a change in design which either increases or decreases the quantity of seal the variation in quantity will be measured as prescribed above and the quantity shown on the plans and in the proposal will be increased or decreased as the case may be.

436.7. **Payment.** The quantity to be paid for will be that quantity shown on the contract plans and in the proposal, except as may be modified by the following:

Either party to the contract may request an adjustment of the quantities shown on the contract plan (by each separate bid item), if the quantities, measured as outlined in Article 436.6. vary from those shown on the contract plans by more than 5 percent.

The party to the contract which requests an adjustment shall present to the other, three copies of field measurements and calculations showing the revised lengths for the structure or structures in question. These revised lengths of seal, when proven correct, together with all other seals under the same bid item, shall constitute the final quantity for which payment will be made. Adjustment of these quantities will not be subject to the provisions of Article 4.5.

When quantities are revised by a change in design the 'plan quantity' will be increased or decreased by the amount involved in the design change. Quantities revised in this manner will be subject to the provisions of Article 4.5.

Payment for preformed joint seal, at the unit price bid, measured as specified under Article 436.6. shall be full compensation for all materials, (including lubricant-sealer), tools, equipment, labor, and for all incidentals necessary to complete the work.

ITEM 437

CONCRETE ADMIXTURES

437.1. Description. This item shall govern the materials used, methods of tests, and construction methods for the use of admixtures in concrete.

437.2. General.

An "air-entraining admixture" is defined as a material which, when added to a concrete mixture in the correct quantity, will entrain uniformly dispersed microscopic air.

A "water-reducing, retarding admixture" is defined as a material which, when added to a concrete mixture in the correct quantity, will reduce the quantity of mixing water required to produce concrete of a given consistency and will retard the initial set of the concrete.

A "water-reducing admixture" is defined as a material which, when added to a concrete mixture in the correct quantity, will reduce the quantity of mixing water required to produce concrete of a given consistency.

An "accelerating admixture" is defined as an admixture that accelerates the setting time and the early strength development of concrete.

A "high-range water reducing admixture" is defined as a material which when added to a concrete mix in the correct quantity will produce the results required herein.

437.3. Retarding and Water Reducing Admixtures. The admixture shall meet the requirements of Type A, Type D or Type F admixture as

specified in ASTM Designation: C494, modified as follows:

(1) The water-reducing retarder shall retard the initial set of the concrete a minimum of 2 hours and a maximum of 4 hours, at a specified dosage rate, at an ambient temperature of 90 F.

(2) The cement used in any series of tests shall be either the cement proposed for the specific work or a "reference" Type I cement from one mill.

(3) Unless otherwise noted on the plans, the minimum relative durability factor shall be 80.

(4) All concrete being tested will contain entrained air. The air entraining admixture used in the reference and test concrete shall be Neutralized Vinsol Resin.

High-range water reducing admixtures when compared to a standard mix design in accordance with ATSM Designation: C494, in addition to (2) (3) and (4) above shall produce the following:

(1) It shall reduce the required water by a minimum of 15%.

(2) It shall increase the seven day compressive strength of the concrete by a minimum of 25%.

(3) It shall not retard the initial set of concrete by more than one and one-half hours, when tested in accordance with ASTM Designation: C403.

(4) It shall contain no chlorides, air entraining agents or urea.

437.4. Air Entraining Admixture. The admixture shall meet the requirements of ASTM Designation: C260 modified as follows:

(1) The cement used in any series of tests shall be either the cement proposed for specific work or a "reference" Type I cement from one mill.

(2) Unless otherwise noted on the plans, the minimum relative durability factor shall be 80.

The air entraining admixture used in the reference concrete shall be Neutralized Vinsol Resin.

437.5. Accelerating Admixture. The admixture shall meet the requirements for a Type C admixture as specified in ASTM C 494 modified as follows:

The accelerating admixture will contain no chlorides, and shall be used in the liquid form only.

Accelerators will be used only to meet special requirements and will require the approval of the Engineer on each specific project.

437.6. Approval of Admixtures. The manufacturer shall certify that the material to be furnished meets the requirements of this Item, and of ASTM Designation: C260 or C494, as modified herein, and shall furnish test reports from an approved laboratory, as defined by the Item, "Definition of Terms", having prior approval of the Materials and Tests Engineer. At the time of original request for approval of admixtures, the manufacturer shall state in writing the chloride content of the admixtures. No admixture to which chlorides have been added during manufacture will be permitted to be used.

In addition to the above, the manufacturer shall furnish the following:

(1) At the time of original request for approval of the admixture, the manufacturer shall supply a five gallon sample of the material to the Materials and Tests Engineer, 38th and Jackson Streets, Austin, Texas 78703.

(2) Each six months after approval of the material, the manufacturer shall furnish a notarized certification indicating that the material originally approved has not been changed or altered in any way. Any change in formulation of an admixture shall require retesting, and shall be approved by Materials and Tests Engineer prior to use.

(3) Prior to approval, an Infrared Spectrophotometry scan, solids content, pH value, and unit weight will be submitted for further identification. A range of values will be given to cover the normal manufacturing range. A change in formulation discovered by any of the tests prescribed herein, or other means, and not reported and retested, may be cause to permanently bar the manufacturer from furnishing admixtures for Departmental projects.

A list of pretested and approved admixtures will be maintained by the Materials and Tests Engineer. This list shall specify the approved dosage rates to be used except as modified herein.

The Department reserves the right to perform any or all of the tests required by ASTM Designation: C 260 and C 494 as a check on the tests reported by the manufacturer. In case of any variance the Departmental tests will govern.

437.7. Construction Use of Admixtures. When used in construction in conformance with the basic reference specifications and this specification, the Contractor will be allowed to use any admixture which has been approved. The Contractor shall submit to the Engineer one copy of the invoice showing the admixture or admixtures to be used on the project. Prior to using an admixture in the work, trial mixes shall be made and tested in the

field using the materials and equipment to be used on the project.

Mix designs from previous or concurrent jobs may be used without trial batches if it is shown that no substantial change in any of the proposed ingredients has been made.

For air entraining admixtures the dosage shown on the approved list is the dosage utilized in approval tests of the admixture. This dosage *must* be adjusted as necessary to produce the required air content in the concrete within the specified tolerances.

For water reducing, water reducing-retarding, and high range water reducing admixtures, dosage rates different from those on the list of approved admixtures may be used provided they are established on the basis of trial mixes.

An approved retarding admixture (for normal hot weather concreting) may not perform satisfactorily for extended retardation, in which case its use will not be permitted.

All accelerating admixtures dosages will be based on trial mixes and approved by the Engineer.

All admixtures used shall be in the liquid state with the exception of high-range water reducers which may be in the powder form. All liquid admixtures shall be dispensed separately but at the same time as the mixing water except that liquid or powdered high-range water reducers shall be introduced into the concrete at the job site. No admixture shall be dispensed on dry aggregates. Each admixture shall be dispensed separately.

Admixtures shall be agitated as required to prevent separation or sedimentation of solids. Air agitation of Neutralized Vinsol Resin will not be permitted.

Air entraining agents shall be charged into the mixer at the beginning of the batch. Retarding or water reducing admixtures, except for high-range water reducers, shall be charged into the mixer during the last one-third of the batch.

Accelerating admixtures will be used only on the express approval of the Engineer. Accelerating admixtures will not be permitted in bridge decks, direct traffic culvert slabs at any time, nor when Type II cement is specified.

The high-range water reducing admixtures (liquid or powder form) shall be incorporated in the mix entirely at the job site as determined by adequate trial batches, and approved by the Engineer. Normally powdered admixtures will be measured by the weight basis and dispensed at the job site by method approved by the Engineer. The rotation of the mixer shall be sufficient to thoroughly mix the admixture into the concrete. The volume of water in the liquid high-range water reducer shall be taken into account in

determining the water/cement ratio of the mix. If during the placement of concrete, an appreciable slump loss is noted, additional high-range water reducing admixture will be required to bring the concrete back into the desired consistency. The addition of water other than in the water reducer will not be permitted at the job site.

When high-range water reducing admixtures are used with Ready-Mixed concrete, the capacity of the truck mixer may be reduced for each batch by 25% of the rated capacity to assure proper mixing of the admixture.

When deemed necessary by the Engineer, the Contractor shall furnish additonal quantities of the admixture being used for further testing. Further use of the admixture will not be allowed until the results of such tests are known and the material meets the requirements of this item.

For individual placements of concrete of 25 cubic yards or more and for all Ready-Mix concrete, the admixture shall be measured and dispensed by a readily adjustable dispenser. When set to a predetermined volume the dispenser shall fill to the preset amount and hold it positively without leakage until the operator releases the content into the mixing water, by some positive means. Unless otherwise shown on the plans, completely automatic dispensing will not be required, except for use with a fully automatic plant.

The calibrated container shall be a measuring reservoir of the type where the level of the admixture is visible at all times. A strip gauge with one ounce increments for air-entraining admixtures and ten ounce increments for water reducing and/or retarding admixtures, shall be attached securely to the measuring apparatus. This strip shall be a material possessing weather-resistant qualities. The accuracy required for these systems shall be plus or minus three percent. The equipment shall visibly show the total amount to be dispensed for ready check by the Engineer.

For contract work, with individual placements of less than 25 cubic yards and with the concrete batched on the job site, the Engineer may waive the requirements for mechanical dispensing equipment.

437.8. **Measurement and Payment.** No additional compensation will be made for the materials, equipment or methods required by this item, but shall be considered subsidiary to the various items included in the contract.

ITEM 438

DENSE CONCRETE OVERLAY

438.1. **Description.** This item shall govern for the materials to be used and for overlaying of a previously constructed concrete surface with a dense concrete overlay and for the removal and replacement of deteriorated

and/or delaminated concrete, in acordance with the details shown on the plans and the requirements of this Item.

For this item the straight edge and texture depth requirements specified in Article 420.20 shall govern for finishing the dense concrete overlay.

438.2. **Materials.** All materials shall conform with the respective requirements of the Items, "Concrete for Structures", "Concrete Structures", "Concrete Surface Treatment" and "Concrete Admixtures" with the following exceptions:

(1) **Cement.** Portland cement shall be Type II. The same brand and source of cement shall be used throughout for overlaying any one structure.

(2) **Coarse Aggregate.** The coarse aggregate shall be crushed stone, containing no chert or shale, having an absorption not exceeding 3 percent, and shall conform to the gradation of Grade No. 6 of the Item, "Concrete for Structures", or with the gradation shown on the plans.

(3) **Concrete.** The concrete shall contain a minimum of 8.75 sacks of cement per cubic yard, with a maximum water/cement ratio of 3.60 gallons per sack (.32 lbs. water per lb. of cement). The absolute volume of fine aggregate shall be approximately equal to that of the coarse aggregate.

A water reducing admixture will be required.

The entrained air content of the fresh concrete, as determined in accordance with Test Method Tex-416A by vibration, shall be 6 percent, with a tolerance of plus or minus one percent.

The slump, measured in accordance with Test Method Tex-415-A by vibration, shall be three-fourths of an inch with a tolerance of plus or minus one-fourth of an inch.

Concrete strength shall be a minimum of 5500 psi at 28 days (850 psi beam break at 7 days). Strength specimens shall be made in accordance with Test Method Tex-418A or 420A by vibration. Curing and testing of specimens shall be in accordance with Test Method Tex-418-A or 420-A.

Ready mix concrete will not be permitted.

(4) **Grout.** The grout for bonding new concrete to existing concrete shall consist of equal parts by weight of Portland cement and sand, mixed with sufficient water to form a stiff slurry which can be applied with a stiff brush or broom to the existing concrete in a thin, even coating that will not run or puddle in low spots.

438.3. **Equipment.** The equipment used shall be subject to the approval of the Engineer and shall comply with the following:

(1) **Surface Preparation Equipment.** The surface preparation equipment shall be as follows:

(a) Scarifying equipment shall conform to the requirements of the Item, "Scarifying Concrete Bridge Slab".

(b) Sandblasting equipment shall be capable of removing oil, dirt, slurry, curing compound, laitance, etc., from the surface of the concrete. Equipment for wet sandblasting shall be in accordance with the Item, "Wet Sandblasting".

(c) Sawing equipment, when required, shall be capable of sawing concrete to the specified depth of overlay.

(d) Power-driven chipping tools not heavier than the nominal 30 pound class will be permitted for removal of concrete.

(e) Chipping hammers not heavier than a nominal 15 pound class shall be used to remove concrete beneath any reinforcing bars.

(2) **Proportioning and Mixing Equipment.** For this Item, a mobile, continuous, volumetric mixer, or a volumetric or weight batch mixer of the rotating paddle type will be required.

These mixers shall be designed to receive all the concrete ingredients, including admixtures, required by the mix design and mix them to the required consistency before discharging. They may be of the volumetric or weight batch design. The mixers shall have adequate water supply and metering devices.

For continuous volumetric mixers the materials delivered during a revolution of the driving mechanism, or in a selected time interval, will be considered a batch and the proportion of each ingredient will be calculated in the same manner as for a batch type plant.

The mixing time shall be in accordance with the recommendations of the manufacturer of the mixer; unless otherwise revised by the Engineer.

Calibration of these mixers will be required.

(3) **Placing and Finishing Equipment.** Sufficient and appropriate hand tools for placing and finishing stiff plastic concrete and for working it to the correct level for strike-off shall be provided.

A finishing machine, with dual oscillating screeds, complying with the following requirements shall be used. It will be inspected and approved by the Engineer prior to use.

A mechanical strike-off will be required to provide a uniform thickness of concrete in front of the oscillating screed.

At least one oscillating screed shall be designed to consolidate the depth of concrete overlay to 98 percent of the unit weight determined in accordance with ASTM Designation: C138 by vibration. A sufficient number of identical vibrators shall be installed so that at least one is provided for each 5 feet of screed length. The bottom face of this screed shall be at least 5 inches wide with a turned up or rounded leading edge to minimize tearing of the surface of the plastic concrete. Each screed shall have an effective weight of at least 75 pounds for each square foot of bottom face area. Each screed shall be provided with positive control of the vertical position, the angle of tilt and the shape of the crown.

Design of the finishing machine together with appurtenant equipment shall be such that positive machine screeding of the plastic concrete will be obtained within one inch of the face of the existing curb or parapet wall. The length of the screed shall be sufficient to extend at least 6 inches beyond the line where a sawcut will be made to form the edge of a subsequent placement, and shall overlap the sawed edge of a previously placed course at least 6 inches.

The finishing machine shall be capable of forward and reverse motion under positive control. Provision shall be made for raising the screeds to clear the screeded surface for traveling in reverse.

Supporting rails for the finishing machine shall be fully adjustable (not shimmed) to obtain the correct profile.

The finishing machine shall be equipped to travel on and screed off of any adjacent completed lane without damaging it.

The finishing machine shall be so designed that under normal operating conditions, the elapsed time between depositing the concrete on the existing slab and final screeding shall not exceed 15 minutes.

Manual type screeds with approved vibrators shall be used to consolidate and finish small or irregular areas inaccessable to the finishing machine.

Two movable work bridges shall be provided at all times during concrete placement. One work bridge shall be used for checking density, surface finishing and texturing. One work bridge shall be used to cover the overlay with wet burlap.

438.4. Proportioning and Mixing of Concrete Materials. Applicable provisions of the Item, "Concrete for Structures" shall govern together with the following:

Concrete shall be proportioned and mixed at the project site.

The water-reducing admixture shall be mixed and incorporated in the concrete mixture in accordance with the manufacturer's recommendations and the Engineer's instructions.

A continuous mixer or mortar mixer, using volumetric measurements, may be used for mixing grout.

438.5. **Construction Methods.**

(1) **General.** The Contractor shall furnish the Engineer, for his approval, a work plan including equipment and manpower before work is started.

During the construction period of this project, the Contractor shall provide such traffic controls as required on the plans and by the specifications.

The Engineer may require the Contractor to place concrete during night hours if daytime temperature and wind conditions are detrimental to the proper placing of overlay. The Engineer will inform the Contractor, in writing, if night placements become necessary. Additional compensation will not be made for night placements of concrete.

In the event that the Engineer does require the Contractor to place concrete during night hours, sufficient lighting will be provided as necessary to make quality workmanship and adequate inspection possible. The Engineer shall approve the adequacy of such lighting before operations are begun. The Contractor shall exercise reasonable care to avoid interruptions when placing concrete during night hours, promptly repairing any damage to the lighting system and replacing all burned out lamps.

The overall combination of labor and equipment for proportioning, mixing, placing, and finishing concrete overlay shall produce not less than 40 linear feet of finished overlay per hour.

Traffic other than construction equipment for the overlay, will not be permitted on any portion of the bridge deck after it has undergone the required scarifying or cleaning and before the overlay has been placed.

Concrete shall not be placed when the air or deck temperature is below 40 F. The temperature of the concrete when placed shall be between 50 F and 85 F.

No equipment shall be permitted on a finished overlay,and no preparation work shall be performed on the lane adjacent to new concrete until 3 days after the overlay concrete has been placed. Equipment permitted on the overlay after this 3-day period shall be limited to rubber-tired concrete buggies and a screed. Curing operations shall not be interrupted for carting of concrete over slabs.

Opening the completed structure with the overlay to normal construction traffic, and when necessary, to the traveling public, may be at the end of the 10-day curing period.

(2) **Preparation of Surface.** The surface of slabs (new construction) or concrete box beams, finished in accordance with Articles 420.20 and 425.4.(4) for surfaces to be overlayed with concrete, will not require scarifying. These surfaces shall be cleaned by wet or dry sandblasting, to remove dirt, oil, curing compound, laitance, surface mortar or other material that would inhibit bonding of the overlay, but shall leave the striations intact.

For rehabilitation of slabs, scarifying of surfaces to the specified depths will be required. Scarifying methods shall be in accordance with the Item, "Scarifying Concrete Bridge Slab".

Deteriorated and/or delaminated areas of concrete shown on the plans or as determined by use of a sounding hammer, chain drag or other acceptable device, and by visual inspection after scarifying, shall be removed and disposed of as directed by the Engineer.

For the removal of deteriorated concrete in small areas not accessible to the mechanical scarifier, and for spot removal of small areas of deteriorated concrete, to a depth down to the existing top reinforcing steel, a jack hammer not heavier than a nominal 30-pound class may be used. This class of jack hammer may also be used for concrete removal between existing reinforcing bars to a greater depth, but chipping hammers, not heavier than a nominal 15-pound class, shall be used for removal of concrete from beneath any reinforcing bars. Care shall be taken to prevent cutting, stretching, or damage to exposed reinforcing steel by direct impact of these power tools. All jack hammers and chipping hammers shall be operated at an angle of 45 degrees or less measured from the surface of the slab.

When bond between existing concrete and reinforcing steel that will remain in place has been destroyed, the concrete adjacent to and below the bar shall be removed to a minimum one inch depth below the bar to permit new concrete to bond to the entire periphery of the exposed bar.

Prior to placing concrete, all exposed reinforcing steel, scarified surfaces and newly exposed concrete surfaces, including construction joints against curbs or parapet walls, shall be cleaned by wet or dry sandblasting as directed by the Engineer. Wet sandblasting methods shall be in accordance with the Item, "Wet Sandblasting".

When wet sandblasting is used, the surface shall be allowed to dry. The prepared surface shall not be presaturated with water but shall be dry before placing bonding grout. Just prior to placing grout, the sandblasted surfaces shall be further cleaned by filtered air blasting.

(3) **Placing and Finishing Concrete.** Rails or headers upon which the screed travels shall be placed and fastened in position to insure finishing

the concrete to the required profile and shall be placed outside the area to be overlaid. Anchorage of headers or supporting rails shall provide for horizontal and vertical stability. A hold-down device shot into concrete will not be permitted unless the concrete is to be subseqently overlaid. Plans for anchor support of headers or rails shall be submitted to the Engineer for approval.

The thickness of the overlay concrete shall be as specified on the plans. The screed and/or screed rails shall be adjusted to provide an approved grade line and sufficient thickness. The clearance between the screed and existing surfaces shall be checked as follows:

> A filler block having a thickness one-eighth inch less than the overlay thickness shall be attached to the bottom of the screed. With the filler block in place, the screed shall be passed over the area to be overlaid. Places which have insufficient clearance shall be corrected by adjustments of the screed and/or rail system, or by chipping or scarifying as directed by the Engineer.

The maximum width of concrete overlay placed on the bridge deck in one pass shall not exceed approximately 16 feet, unless proven to the satisfaction of the Engineer that more width can be satisfactorily handled.

Location of longitudinal joints shall be as shown on the plans or as approved by the Engineer. At transverse and longitudinal joints, the overlay course previously placed shall be sawed to a straight and vertical edge before the adjacent overlay course is placed.

After the surface has been cleaned and immediately before placing concrete, a thin coating of bonding grout shall be scrubbed into the dry, prepared surfaces. Care shall be exercised to insure that all surfaces, including vertical joints, shall receive a thorough, even coating and that no excess grout is permitted to collect in pockets. Grout placement shall be applied so that it does not become dry before it is covered with concrete.

Areas of the bridge deck where concrete has been removed below the top mat of reinforcing steel, shall be coated with bonding grout, filled with overlay concrete to cover the reinforcing steel, adequately consolidated and rough floated just ahead of the placement of overlay.

The overlay concrete shall be manipulated and mechanically struck off slightly above final grade. It shall then be mechanically consolidated and screeded to final grade. Hand finishing with a float may be required for producing a tight, uniform surface.

Construction joints shall be assured of a dense, water tight finish by proper consolidation of the concrete and float finishing the top surface of the joint flush with adjacent concrete. The top of the joint shall be sealed by painting it with grout as the floating is being completed.

After the joint painting is completed, the overlay surface shall receive a metal tine finish. The tines shall be one-eighth of an inch wide and uniformly spaced between one-fourth and three-eighths of an inch; the direction of the striations and texture depth shall be in accordance with the Item, "Concrete Structures".

At the option of the Contractor, or when required by the plans, the surface shall be given its final texture by saw grooving to meet the above requirements. Saw grooving may be done a minimum of four days after the overlay concrete has been placed. Curing shall be continued after sawing to provide the minimum 10 curing days.

(4) **Curing.** The overlay shall receive a wet burlap cure as soon as possible, after the concrete has been deposited. Failure to apply the wet burlap before the overlay has dried out or cracked shall be cause for rejection of the area of overlay so affected. After application of the wet burlap cure, the overlay shall be kept continuously wet for 24 hours. After 24 hours, or sooner if possible, so that damage to the overlay will not occur, the overlay shall be water cured for an additional 9 days. The surface temperature of the concrete shall be maintained above 40 F for the curing period required. Rejected overlay concrete shall be removed and replaced at no additional cost to the Department.

(5) **Concrete Surface Treatment.** After curing is completed, linseed oil or other required sealer shall be applied to the overlay in accordance with the Item, "Concrete Surface Treatment".

438.6. **Measurement.** Dense concrete overlay of the thickness specified, or to the top mat of reinforcing steel, whichever is greater, will be measured by the square yard of roadway surface overlaid using the dimensions shown on the plans.

In the event of a change in design which either increases or decreases the quantity of dense concrete overlay, the variation in quantity will be measured as prescribed above and the quantity shown on the plans and in the proposal will be increased or decreased as the case may be.

The removal of deteriorated or delaminated concrete below the top mat of reinforcing steel, will be measured by the square yard of surface area.

438.7. **Payment.** The quantity to be paid for will be that quantity shown on the contract plans and in the proposal, except as may be modified by the following:

Either party to the contract may request an adjustment of the quantities shown on the contract plans, if the quantities measured as outlined Article 438.6 vary from those shown on the contract plans by more than 5 percent on any structure.

The party to the contract which requests an adjustment shall present to the other, three copies of field measurements and calculations showing the revised area for the structure or structures in question. These revised areas, when proven correct, together with all other dense concrete overlay under the same bid item, shall constitute the final quantity for which payment will be made. Adjustment of these quantities will not be subject to Article 4.5.

When quantities are revised by a change in design the "plan quantity" will be increased or decreased by the amount involved in the design change. Quantities revised in this manner will be subject to provisions of Article 4.5.

Payment for "Dense Concrete Overlay" measured as specified herein will be paid for at the unit price bid per "Square Yard", and shall be full compensation for removal of deteriorated or delaminated concrete down to the top mat of reinforcing steel, for cleaning or reinforcing steel when required, for preparing existing slabs, for all required sandblasting; and for furnishing, placing, finishing, and curing of the concrete overlay.

Payment for "Removal of Deteriorated Concrete" measured as specified herein will be paid for at 200 percent of the unit price bid per "Square Yard", for "Dense Concrete Overlay", and shall be full compensation for removal of deteriorated or delaminated concrete below the top mat of reinforcing steel, for cleaning of reinforcing steel as required, and for replacement with concrete as specified herein.

The above payment shall be full compensation for all materials, tools, labor, equipment and incidentals necessary to complete the work.

ITEM 439

CONCRETE OVERLAY

439.1. **Description.** This item shall govern for the materials to be used and for overlaying of a previously constructed concrete surface with a concrete overlay, and for the removal and replacement of deteriorated and/or delaminated concrete, in accordance with the details shown on the plans and the requirements of this item.

For this item the straight edge and texture depth requirements specified in Article 420.20 shall govern for finishing the concrete overlay.

439.2. Materials. All materials shall conform with the respective requirements of the Items, "Concrete for Structures", "Concrete Structures", "Concrete Surface Treatment" and "Concrete Admixtures" with the following exceptions:

(1) **Cement.** The same type, brand and source of cement shall be used for overlaying any one structure. Unless otherwise shown on the plans, Type I cement shall be used.

(2) **Coarse Aggregate.** The coarse aggregate shall consist of durable particles of natural or crushed gravel and shall conform with the gradation of Grade No. 6 of the Item, "Concrete for Structures", or with the gradation shown on the plans.

(3) **Concrete.** The concrete shall contain a minimum of 7 sacks of cement per cubic yard; shall have a coarse aggregate factor of not less than 0.60; and have a maximum water/cement ratio not exceeding 4.5 gallons per sack. Unless otherwise specified by the Engineer, entrained air will be required in the concrete. When required the entrained air content of the fresh concrete shall be 6 percent with a tolerance of plus or minus one percent. The slump of the concrete at the time of placement, measured in accordance with Test Method Tex-415-A, shall be 3" plus or minus one inch.

Concrete strength shall be a minimum of 4600 psi at 28 days (750 psi beam break at 7 days). Strength specimens shall be made, cured and tested in accordance with Test Method Tex-418-A or 420-A.

(4) **Grout.** The grout for bonding new concrete to existing concrete shall consist of equal parts by weight of Portland cement and sand, mixed with sufficient water to form a stiff slurry which can be applied with a stiff brush or broom to the existing concrete in a thin, even coating that will not run or puddle in low spots.

439.3. Equipment. The equipment used shall be subject to the approval of the Engineer and shall comply with the following:

(1) **Surface Preparation Equipment.** The surface preparation equipment shall be as follows:

(a) Scarifying equipment shall conform to the requirements of the Item, "Scarifying Concrete Bridge Slab".

(b) Sandblasting equipment shall be capable of removing oil, dirt, slurry, curing compound, laitance, etc., from the surface of the concrete. Equipment for wet sandblasting shall be in accordance with the Item, "Wet Sandblasting".

(c) Sawing equipment, when required, shall be capable of sawing concrete to the specified depth of overlay.

(d) Power-driven chipping tools not heavier than the nominal 30 pound class, will be permitted for removal of concrete..

(e) Chipping hammers not heavier than a nominal 15 pound class shall be used to remove concrete beneath any reinforcing bars.

(2) **Proportioning, Mixing, Placing and Finishing Equipment.** Applicable provisions of the Items, "Concrete for Structures" and "Concrete Structures" shall govern together with the following:

(a) **Grout Mixer.** A continuous mixer or mortar mixer, using volumetric measurements, may be used for mixing grout.

(b) **Hand Tools.** Sufficient and appropriate hand tools for placing and finishing stiff plastic concrete and for working it to correct level for strike-off shall be provided.

(c) **Finishing Equipment.** A vibrating attachment moving ahead of the finishing machine or a vibrating screed, approved by the Engineer, will be required for overlay consolidation. A minimum of one movable work bridge shall be provided for surface finishing, texturing and curing.

439.4. Construction Methods.

(1) **General.** The Contractor shall furnish to the Engineer, for his approval, a work plan including equipment and manpower before work is started.

Side and end forms will be required for supporting the screed and containment of the overlay and will be subject to the approval of the Engineer.

The Engineer may require the Contractor to place concrete during night hours if daytime temperature and wind conditions are detrimental to the proper placing of overlay. The Engineer will inform the Contractor, in writing, if night placements become necessary. Additional compensation will not be made for night placements of concrete.

In the event that the Engineer does require the Contractor to place concrete during night hours, sufficient lighting will be provided as necessary to make quality workmanship and adequate inspection possible. The Engineer shall approve the adequacy of such lighting before operations are begun. The Contractor shall exercise reasonable care to avoid interruptions when placing concrete during night hours, promptly repairing any damage to the lighting system and replacing all burned out lamps.

The overall combination of labor and equipment for proportioning, mixing, placing, and finishing concrete overlay shall produce not less than 40 linear feet of finished overlay per hour.

Traffic other than construction equipment for the overlay, will not be permitted on any portion of the bridge deck after it has undergone the required scarifying or cleaning and before the overlay has been placed.

Concrete shall not be placed when the air or deck temperature is below 40 F. The temperature of the concrete when placed shall be between 50 F and 85 F.

Carting concrete batches over completed slab or overlay will not be permitted until the slab or overlay concrete has attained a 3000 psi compressive strength. If carts are used, timber planking (minimum 3/4" thickness") will be required for the remainder of the curing period. Carts shall be equipped with pneumatic tires. Curing operations shall not be interrupted for the purpose of carting concrete over finished slabs.

Opening the completed structure with the overlay to normal construction traffic, and when necessary, to the traveling public, may be at the end of the 8-day curing period.

During the construction period of this project, the Contractor shall provide such traffic controls as required on the plans and by the specifications.

All other pertinent sections of the Items, "Concrete for Structures" and "Concrete Structures" not covered herein, are applicable.

(2) **Preparation of Surface.** The surface of slabs (new construction) or concrete box beams, finished in accordance with Articles 420.20 and 425.4. (4) for surfaces to be overlayed with concrete, will not require scarifying. These surfaces shall be cleaned by wet or dry sandblasting, to remove dirt, oil, curing compound, laitance, surface mortar or other material that would inhibit bonding of the overlay, but shall leave the striations intact.

For rehabilitation of slabs, scarifying of surfaces to the specified depths will be required. Scarifying methods shall be in accordance with the Item, "Scarifying Concrete Bridge Slab".

Deteriorated and/or delaminated areas of concrete shown on the plans or as determined by use of a sounding hammer, chain drag or other acceptable device, and by visual inspection after scarifying, shall be removed and disposed of as directed by the Engineer.

For the removal of deteriorated concrete in small areas not accessible to the mechanical scarifier, and for spot removal of small areas of deteriorated concrete, to a depth down to the existing top reinforcing steel, a jack hammer not heavier than a nominal 30-pound class may be used. This class of jack hammer may also be used for concrete removal between existing reinforcing bars to a greater depth, but chipping hammers, not heavier than a nominal 15-pound class, shall be used for removal of concrete from beneath any reinforcing bars. Care shall be taken to prevent cutting, stretching, or

damage to exposed reinforcing steel by direct impact of these power tools. All jack hammers and chipping hammers shall be operated at an angle of 45 degrees or less measured from the surface of the slab.

When bond between existing concrete and reinforcing steel that will remain in place has been destroyed, the concrete adjacent to and below the bar shall be removed to a minimum one inch depth below the bar to permit new concrete to bond to the entire periphery of the exposed bar.

Prior to placing concrete, all exposed reinforcing steel, scarified surfaces and newly exposed concrete surfaces, including construction joints against curbs or parapet walls, shall be cleaned by wet or dry sandblasting as directed by the Engineer. Wet sandblasting methods shall be in accordance with the Item, "Wet Sandblasting".

When wet sandblasting is used, the surface shall be allowed to dry. The prepared surface shall not be presaturated with water but shall be dry before placing bonding grout. Just prior to placing grout, the sandblasted surfaces shall be further cleaned by filtered air blasting.

(3) **Placing and Finishing Concrete.** Rails or headers upon which the screed travels shall be placed and fastened in position to insure finishing the concrete to the required profile and shall be placed outside the area to be overlaid. Anchorage of headers or supporting rails shall provide for horizontal and vertical stability. A hold-down device shot into concrete will not be permitted unless the concrete is to be subseqently overlaid. Plans for anchor support of headers or rails shall be submitted to the Engineer for approval.

The thickness of the overlay concrete shall be as specified on the plans. The screed and/or screed rails shall be adjusted to provide an approved grade line and sufficient thickness. The clearance between the screed and existing surface shall be checked as follows:

> A filler block having a thickness one-eighth inch less than the overlay thickness shall be attached to the bottom of the screed. With the filler block in place, the screed shall be passed over the area to be overlaid. Places which have insufficient clearance shall be corrected by adjustments of the screed and/or rail system, or by chipping or scarifying as directed by the Engineer.

Location of longitudinal joints shall be as shown on the plans or as approved by the Engineer. At transverse and longitudinal joints, the overlay course previously placed shall have a straight and vertical edge before the adjacent overlay course is placed.

After the surface has been cleaned and immediately before placing concrete, a thin coating of bonding grout shall be scrubbed into the dry, prepared surfaces. Care shall be exercised to insure that all surfaces, including

vertical joints, shall be receive a thorough, even coating and that no excess grout is permitted to collect in pockets. Grout placement shall be applied so that it does not become dry before it is covered with concrete.

Areas of the bridge deck where concrete has been removed below the top mat of reinforcing steel, shall be coated with bonding grout, filled with overlay concrete to cover the reinforcing steel, adequately consolidated and rough floated just ahead of the placement of overlay.

The overlay concrete shall be manipulated and mechanically struck off slightly above final grade. It shall then be mechanically consolidated and screeded to final grade. Hand finishing with a float may be required for producing a tight, uniform surface.

Construction joints shall be assured of a dense, water tight finish by proper consolidation of the concrete and float finishing the top surface of the joint, flush with adjacent concrete.

After the joint is completed, the overlay surface shall receive a metal tine finish. The tines shall be one-eighth of an inch wide and uniformly spaced between one-fourth and three-eighths of an inch; the direction of the striations and texture depth shall be in accordance with the Item, "Concrete Structures".

At the option of the Contractor, or when required by the plans,the surface shall be given its final texture by saw grooving to meet the above requirements. Saw grooving may be done a minimum of four days after the overlay concrete has been placed. Curing shall be continued after sawing to provide the minimum 10 curing days.

(4) **Curing.** The overlay shall receive a wet burlap cure as soon as possible, after the concrete has been deposited. Failure to apply the wet burlap before the overlay has dried out or cracked shall be cause for rejection of the area of overlay so affected. After application of the wet burlap cure, the overlay shall be kept continuously wet for 24 hours. After 24 hours, or sooner if possible, so that damage to the overlay will not occur, the overlay shall be water cured for an additional 7 days. The surface temperature of the concrete shall be maintained above 40 F for the curing period required. Rejected overlay concrete shall be removed and replaced at no additional cost to the Department.

(5) **Concrete Surface Treatment.** After curing is completed, linseed oil or other required sealer shall be applied to the overlay in accordance with the Item, "Concrete Surface Treatment".

439.5. Measurement. Concrete overlay of the thickness specified, or to the top mat of reinforcing steel, whichever is greater, will be measured by the square yard of roadway surface overlaid using the dimensions shown on the plans.

In the event of a change in design which either increases or decreases the quantity of dense concrete overlay, the variation in quantity will be measured as prescribed above and the quantity shown on the plans and in the proposal will be increased or decreased as the case may be.

The removal of deteriorated or delaminated concrete below the top mat of reinforcing steel, will be measured by the square yard of surface area.

439.6. Payment. The quantity to be paid for will be that quantity shown on the contract plans and in the proposal, except as may be modified by the following:

> Either party to the contract may request an adjustment of the quantities shown on the contract plans, if the quantities measured as outlined in Article 439.5 vary from those shown on the contract plans by more than 5 percent on any structure.
>
> The party to the contract which requests an adjustment shall present to the other, three copies of field measurements and calculations showing the revised area for the structure or structures in question. These revised areas, when proven correct, together with all other concrete overlay under the same bid item, shall constitute the final quantity for which payment will be made. Adjustment of these quantities will not be subject to Article 4.5.

When quantities are revised by a change in design the "plan quantity" will be increased or decreased by the amount involved in the design change. Quantities revised in this manner will be subject to the provisions of Article 4.5.

Payment for "Concrete Overlay" measured as specified herein, will be made at the unit price bid per "Square Yard," and shall be full compensation for removal of deteriorated or delaminated concrete down to the top mat of reinforcing steel, for cleaning of reinforcing steel when required, for preparing existing slabs, for all required sandblasting; and for furnishing, placing, finishing, and curing of the concrete overlay.

Payment for "Removal of Deteriorated Concrete" measured as specified herein, will be made at 200 percent of the unit price bid per "Square Yard", for "Concrete Overlay," and shall be full compensation for removal of deteriorated or delaminated concrete below the top mat of reinforcing steel, for cleaning of reinforcing steel as required, and for replacement with concrete as specified herein.

The above payment shall be full compensation for all materials, tools, labor, equipment and incidentals necessary to complete the work.

ITEM 440

REINFORCING STEEL

440.1. Description. This item shall govern for the furnishing and placing of reinforcing steel, deformed and smooth, of the size and quantity designated on the plans and in accordance with these specifications and with plan details.

440.2. Materials. Unless otherwise designated on the plans, or herein, all bar reinforcement shall be deformed, and shall conform to one of the following:

(1) ASTM Designation: A 615, Grades 40 or 60, open hearth, basic oxygen, or electric furnace new billet steel, or

(2) ASTM Designation: A 617, Grades 40 or 60, axle-steel.

When no specific grade is specified on the plans, the reinforcing steel shall be minimum Grade 40.

(3) Where bending of bar sizes No. 14 or No. 18 of Grade 60 is required, bend testing shall be performed on representative specimens as described for smaller bars in the applicable ASTM Specification. The required bend shall be 90 degrees around a pin having a diameter of 10 times the nominal diameter of the bar.

Spiral reinforcement shall be either smooth or deformed bars, or wire, of the minimum size or gage shown on the plans, or as specified herein. Bars for spiral reinforcement shall comply with ASTM Designation: A 675 (reference to ASTM A 29 is voided), A 615 or A 617. Wire shall comply with ASTM Designation: A 82.

Unless otherwise shown on the plans the minimum yield strength for spiral reinforcement shall be 40,000 psi.

In cases where the provisions of this item are in conflict with the provisions of the ASTM Designation to which reference is made, the provisions of this item shall govern.

Report of chemical analysis, showing the percentages of carbon, manganese, phosphorus and sulphur will be required for all reinforcing steel, when it is to be welded.

The nominal size and area and the theoretical weight of reinforcing steel bars covered by this specification are as follows:

Bar Size Number	Nominal Diameter In.	Nominal Area Sq. In.	Weight Per Linear Foot
2	0.250	0.05	0.167
3	0.375	0.11	0.376
4	0.500	0.20	0.668
5	0.625	0.31	1.043
6	0.750	0.44	1.502
7	0.875	0.60	2.044
8	1.000	0.79	2.670
9	1.128	1.00	3.400
10	1.270	1.27	4.303
11	1.410	1.56	5.313
14	1.693	2.25	7.65
18	2.257	4.00	13.60

Smooth bars, larger than No. 4, may be steel conforming to the above or may be furnished in any steel that meets the physical requirements of ASTM Designation: A 36.

Smooth round bars shall be designated by size number through No. 4. Smooth bars above No. 4 shall be designated by diameter in inches.

Wire for fabric reinforcement shall be cold-drawn from rods hot-rolled from open hearth, basic oxygen, or electric furnace billets. Wire shall conform to the requirements of the Standard Specifications for Cold-Drawn Steel Wire for Concrete Reinforcement, ASTM Designation: A 82 or A 496. Wire fabric, when used as reinforcement, shall conform to ASTM Designation: A 185 or A 497.

When wire is ordered by size numbers, the following relation between size number, diameter in inches and area shall apply unless otherwise specified:

Size Number	Nominal Diameter (in.)	Nominal Area (in.^{2})
31	0.628	0.310
30	0.618	0.300
28	0.597	0.280
26	0.575	0.260
24	0.553	0.240
22	0.529	0.220
20	0.505	0.200
18	0.479	0.180
16	0.451	0.160
14	0.422	0.140
12	0.391	0.120

Size Number	Nominal Diameter (in.)	Nominal Area (in.^{2})
10	0.357	0.100
8	0.319	0.080
7	0.299	0.070
6	0.276	0.060
5.5	0.265	0.055
5	0.252	0.050
4.5	0.239	0.045
4	0.226	0.040
3.5	0.211	0.035
3	0.195	0.030
2.5	0.178	0.025
2	0.160	0.020
1.5	0.138	0.015
1.2	0.124	0.012
1	0.113	0.010
0.5	0.080	0.005

Where deformed wire is required the size number shall be preceded by D, and for smooth wire the prefix W shall be shown.

440.3. Bending. The reinforcement shall be bent cold, true to the shapes indicated on the plans. Bending shall preferably be done in the shop. Irregularities in bending shall be cause for rejection.

Unless otherwise shown on the plans, the inside diameter of bar bends, in terms of the nominal bar diameter (d), shall be as follows:

Bends of 90° and greater in stirrups, ties and other secondary bars that enclose another bar in the bend shall be:

	Grade 40	Grade 60
#3, #4, #5	4d	4d
#6, #7, #8	6d	6d

All bends in main bars and in secondary bars not covered above shall be:

	Grade 40	Grade 60
#3 thru #8	6d	6d
#9, #10, #11	8d	8d
#14, #18	10d	10d

440.4. Tolerances. Fabricating tolerances for bars, from plan dimensions, shall not be greater than shown in Figure 1.

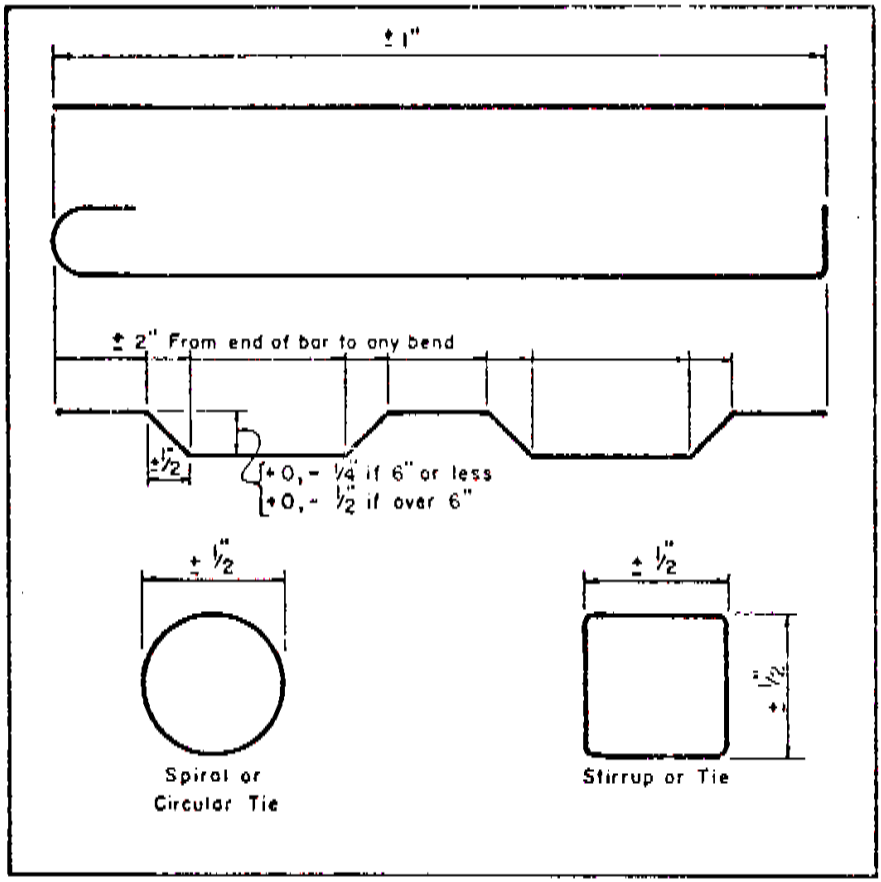

FIGURE 1

440.5. Storing. Steel reinforcement shall be stored above the surface of the ground upon platforms, skids, or other supports and shall be protected as far as practicable from mechanical injury and surface deterioration caused by exposure to conditions producing rust. When placed in the work, reinforcement shall be free from dirt, paint, grease, oil, or other foreign materials. Reinforcement shall be free from injurious defects such as cracks and laminations. Rust, surface seams, surface irregularities or mill scale will not be cause for rejection, provided the minimum dimensions, cross-sectional area and tensile properties of a hand wire brushed specimen meets the physical requirements for the size and grade of steel specified.

440.6. Splices. No splicing of bars, except when provided on the plans, or, specified herein, will be permitted without written approval of the Engineer.

Splices not provided for on the plans will be permitted in slabs not more than 15" in thickness, columns, walls and parapets, but not included for measurement, subject to the following:

Splices will not be permitted in bars 30 feet or less in plan length. For bars exceeding 30 feet in plan length, the distance center to center of splices shall not be less than 30 feet minus one splice length, with no more than one individual bar length less than 10 feet. Splices not shown on the plans, but permitted hereby, shall be made in accordance with Table 1. The specified concrete cover shall be maintained at such splices and the bars placed in contact and securely tied together.

	LAP LENGTH	
SIZE	GRADE 40	GRADE 60
No. 3	1'-0	1'-0
No. 4	1'-2"	1'-9"
No. 5	1'-5"	2'-2"
No. 6	1'-9"	2'-7"
No. 7	2'-4"	3'-5"
No. 8	3'-0	4'-6"
No. 9	3'-10"	5'-8"
No. 10	4'-10"	7'-3"
No. 11	5'-11"	8'-11"

Spiral steel shall be lapped a minimum of one turn.

Sizes No. 14 and No. 18 may not be lapped.

TABLE 1
Minimum Lap Requirements
for Bar Sizes Through No. 11

Welding of reinforcing bars may be done only where shown on the plans or as permitted herein. All welding operations, processes, equipment, materials, workmanship, and inspection shall conform to the requirements of the plans and of the Item, "Structural Welding". All splices shall be of such dimension and character as to develop the full strength of the bar being spliced.

End preparation for butt welding reinforcing bars, shall be done in the field. Delivered bars shall be of sufficient length to permit this practice.

For box culvert extensions with less than one foot of fill, the existing longitudinal bars shall have a lap with the new bars as shown in Table 1. For extensions with more than one foot of fill, a minimum of 6 inch lap will be required.

440.7: Placing. Unless otherwise shown on the plans, dimensions shown for reinforcement are to the centers of the bars. Reinforcement shall be placed as near as possible in the position shown on the plans. In the plane of the steel parallel to the nearest surface of concrete, bars shall not vary from plan placement by more than one-twelfth of the spacing between bars. In the plane of the steel perpendicular to the nearest surface of concrete, bars shall not vary from plan placement by more than one-quarter inch. Cover of concrete to the nearest surface of steel shall meet the above requirements but shall never be less than one inch.

The reinforcement shall be accurately located in the forms, and firmly held in place, before and during concrete placement, by means of bar supports, adequate in strength and number to prevent displacement, to keep the steel at the proper distance from the forms and to carry the reinforcing bars they support. Bars shall be supported by standard galvanized bar supports, bar supports with plastic tips, stainless steel bar supports, approved plastic bar supports or approved pre-cast mortar or concrete blocks.

Mortar or concrete blocks shall be cast to uniform dimensions with adequate bearing area. A suitable tie wire shall be provided in each block for anchoring to the steel. They shall be accurately cast to the thickness required in molds approved by the Engineer. The surface placed adjacent to the form shall be a true plane, free of surface imperfections. The blocks shall be cured by covering with wet burlap or mats for a period of 72 hours. Mortar for blocks shall contain approximately one part cement to three parts sand. Concrete for blocks shall contain nine sacks of cement per cubic yards.

Individual bar supports shall be placed in rows at four foot maximum spacing in each direction. Continuous type bar supports shall be placed at four feet maximum spacing.

Reinforcing steel for bridge slabs, top slabs of direct traffic culverts and the top slabs of prestressed box beams shall be tied at all intersections except that where the spacing is less than one foot in each direction, alternate intersections only need to be tied. For reinforcing steel cages for other structural members, the steel shall be tied at enough intersections to provide a rigid cage of steel. Mats of wire fabric shall overlap each other one full space as a minimum to maintain a uniform strength and shall be fastened securely at the ends and edges.

Before any concrete is placed, all mortar, mud, dirt, etc. shall be cleaned from the reinforcement. No concrete shall be deposited until the Engineer has inspected the placement of the reinforcing steel and given permission to proceed.

If the reinforcement is not adequately supported or tied to resist settlement, floating upward, overturning of truss bars, or movement in any direction during concrete placement, permission to continue concrete placement will be withheld until corrective measures are taken. Sufficient measurements shall be made during concrete placement to insure compliance with the first paragraph of this Article.

440.8. **Measurement.** The measurement of quantities of bar reinforcement furnished and placed will be based on the calculated weights of the quantities as shown on the contract plans, with no allowance made for added bar lengths for splices requested by the Contractor, nor for extra metal used when bars larger than those specified are substituted with the permission of the Engineer. Tie wires and supporting devices will not be included in the calculated weights. The calculated weight for bar reinforcement will be determined using the theoretical bar weights set forth in Article 440.2, and the lengths designated on the plans.

Splices permitted under the second paragraph of Article 440.6. will not be measured for payment. Welded splices will not be measured, but shall be considered subsidiary to this item.

For the quantity measured under this item, adequate calculations have been made in accordance with Article 9.1. If no adjustment is required by Article 440.9., additional measurements or calculations will not be required.

Measurement required by a change in design will be computed as specified herein.

440.9. **Payment.** The quantity to be paid for, will be that quantity shown on the contract plans and in the proposal, regardless of errors in calculation, except as may be modified by the following:

(1) When a complete structure element has been erroneously included or omitted from the plans, the quantity shown on the plans for that element will be added to or deducted from the plan quantity and included for payment. A complete structure element will be the smallest portion of a total structure for which a corresponding quantity of concrete is included on the plans. Quantities revised in this manner will not be subject to the provisions of Article 4.5.

(2) When the plan quantity for a complete structure element is in error by 5 percent or more, a recalculation will be made and the corrected quantity included for payment. Quantities revised in this manner will not be subject to the provisions of Article 4.5.

(3) When quantities are revised by a change in design the "plan quantity" will be increased or decreased by the amount involved in the design change. Quantities revised in this manner will be subject to the provisions of Article 4.5.

The party to the contract requesting the adjustment shall present to the other, three copies of the description and location, together with calculations of the quantity for the structure element involved. When this quantity is certified correct by the Engineer, it will become the revised plan quantity.

The unit price bid per pound for reinforcing steel, shall be full compensation for furnishing, bending, fabricating, welding and placing the reinforcement, for all clips, blocks, metal spacers, ties, wire, or other materials used for fastening reinforcement in place, and for all tools, labor, equipment, and incidentals necessary to complete the work.

ITEM 441

STEEL STRUCTURES

441.1. Description. This item shall govern for the fabrication and erection of structural steel, and other metals used for steel structures or steel portions of structures, except reinforcing and prestressing steel.

441.2. Materials. The metal used for the various portions of the structures shall be as specified and shall conform to the requirements of the Item, "Metal for Structures".

FABRICATION

General

441.3. Shop Drawings. Unless otherwise provided on the plans, the Contractor shall prepare and submit detailed shop drawings for each detail

of the general plans requiring the use of Structural Steel, Forgings, Wrought Iron, Castings, or Bearings. Camber and erection diagrams will be required. The drawings shall be prepared on sheets 22 by 36 inches. The margin at the left end shall be 1½ inches wide and the others one-half inch. Each sheet shall have a title in the lower right-hand corner. The title shall include the sheet index data shown on the lower right-hand corner of the project plans, sheet numbering for the shop drawings, name of structure or stream, name of Fabricator and name of Contractor.

Preparation and submission of drawings may be on 11 by 18 inch sheets, or full size drawings may be reduced to half-scale size, if they are completely clear and legible.

All shop drawings shall be checked by the Fabricator before submitting them for approval. Submission shall be made to the Bridge Engineer, State Department of Highways and Public Transportation, 11th and Brazos Streets, Austin, Texas, 78701.

Six copies of shop drawings and seven copies of erection drawings will be required, except that one additional copy of each will be required for Railroad Underpass Structures. Additional sets may be required by note on the plans.

Reproducible tracings of approved shop drawings will be required for railroad underpasses only, upon completion of fabrication.

The Contractor shall be responsible for the correctness and completeness of the drawings and for shop fit and field connections, although the drawings have been approved by the Engineer.

Contract plans indicate details of joints to be used with manual welding. When the use of submerged arc welding, gas metal-arc welding or flux cored arc welding processes are anticipated, the shop drawings shall reflect the correct joint details.

For plate girder units, preliminary erection drawings showing the sequence of erection, the location of falsework, and the location of ground and air splices with the proposed method of support, to determine any overstress caused by the erection procedure, shall be submitted to the Bridge Division for approval prior to the submission of shop drawings. Five copies will be required.

When painting is required, the designation of source of supply (State Stock or outside source) and the lead time required to order paint if from State stock, shall be in accordance with the Item, "Cleaning, Paint and Painting".

When structural members are to be fabricated by welding, a welding procedure in accordance with SDHPT Bulletin C-5, shall be submitted to the Materials and Tests Engineer, 38th and Jackson Streets, Austin, Texas 78703. A minimum of five copies of each required procedure shall be submitted on forms furnished by the Department. Upon approval, the welding procedure will be assigned a Welding Procedure Number. The Shop Drawings, when submitted, shall include this number adjacent to the appropriate welding symbol. The same procedure, when proposed for subsequent projects, will not require resubmission.

When structural members with calculated stress, are fabricated by welding, or bolting, a fabrication procedure will be required from all fabricators who are new to Department construction and may be required from any fabricator when deemed necessary. A fabrication procedure shall include a list of equipment to be used, sequence of assembly, sequence and detail of connections made, special processes such as planing, facing, etc., detail of heat treating procedures, when applicable, and any other information concerning fabrication, as may be required by the Engineer.

441.4. Notice of Beginning Work. The Contractor shall give the Engineer adequate notice prior to the beginning of work in the shop so inspection may be provided as follows:

Shops in the State of Texas	24 hours
Shops in the Contiguous United States	7 days
Shops in Foreign Countries	60 days

No work shall be performed in the shop before the Engineer has authorized fabrication. Any purchases of material prior to fabrication authorization shall be at the Contractor's risk.

441.5. Inspection and Testing. The Contractor shall provide facilities for the inspection of material and workmanship in the shop, and furnish the Inspector with as many helpers as he needs to properly inspect the work. The Inspector shall be allowed free access to the necessary parts of the work.

Where fabrication of structural steel is accomplished in other than the contiguous forty-eight states, inspection cost will be in accordance with Article 6.2.

The Inspector will have the authority to reject any material or work which does not meet the requirement of these specifications. In case of dispute, the Contractor may appeal to the Engineer, whose decision will be final.

Prior to beginning fabrication, the Fabricator shall furnish the Engineer with 4 copies of the completed material identification form with supporting mill test reports. These material identification forms will be furnished to the Fabricator by the Department without charge. The mill test reports shall reflect;

Specification to which material is produced.

Heat number of material.

Chemical and physical properties of the material required by the material specification.

Impact test data when required.

Grain size or statement that fine grain practice was used, when required.

Except as specified elsewhere, mill test reports will not be required for miscellaneous hardware.

As material is shipped, the Fabricator shall furnish the Engineer with 4 copies of his shipping invoice. The Fabricator's shipping invoice shall reflect:

Member piece mark identification.

Number of pieces shipped.

Total calculated or scale weight for each shipment per bid item.

Final payment for structural steel will not be made until shipping invoices indicating total weight of material used have been received and checked by the Department. Shipping weights will not be used as measurement for payment. The acceptance of any material or finished members by the Inspector will not prohibit subsequent rejection if found defective. Rejected material shall be replaced promptly or made good by the Contractor.

441.6. Workmanship. For railroad underpass structures, shop workmanship shall be in accordance with the latest American Railway Engineering Association Specification for Steel Railway Bridges for Fixed Spans.

All structural materials, before and after fabrication, shall be stored above the ground upon platforms, skids, blocking, or other supports approved by the Engineer. The material shall be kept free from dirt, grease, and other foreign matter and shall be protected as nearly as practicable from corrosion.

Structural steel shall be protected from salt water and salt water spray during transit.

Fabrication and rolling tolerances for rolled shapes, plates, bars, wide flange sections and miscellaneous steel shall be in accordance with ASTM Designation: A 6. Tolerances for fabricated girders shall be in accordance with SDHPT Bulletin C-5.

Rolled sections or fabricated sections of slightly differenct dimensions and weight than the standard sections shown will be acceptable, provided equal or greater Moment of Inertia and Section Modulus for the completed section are provided.

Maximum deviation from flatness for webs of wide flange sections shall be the same as for built-up girders.

Shoes shall be fabricated with a tolerance not greater than the following:

The top bolster shall have the center 75 percent of the long dimension true to one thirty-second inch, with the remainder true to one-sixteenth inch, and shall be true to one thirty-second inch across its entire width in the short dimension.

For a pin and rocker type expansion shoe, the axis of rotation shall coincide with the central axis of the pin.

When the shoe is completely assembled and the top bolster is moved horizontally simulating the movement of the shoe in the finished structure, no point in the plane of the top bolster shall change elevation by more than one-sixteenth inch for the full possible travel of the rocker both ways from the neutral position, nor shall the top bolster change inclination with respect to the horizontal by more than one degree during this same travel.

I-beams and girders shall be fabricated with a tolerance not greater than the following:

The plane of the bearing area of beams and girders shall be perpendicular to the vertical axis of the beam within one-sixteenth inch.

Correction of bearing areas of shoes, beams and girders to the above tolerances, shall be with heat and/or external pressure. Grinding or milling will be permitted if reduction of required thickness of member is not reduced by more than one-sixteenth inch.

Rolled material must be straight before being laid off or worked.

If straightening is necessary, it shall be done by procedures submitted to and approved by the Engineer. Sharp kinks and bends will be cause for rejection of the material, unless corrected to the satisfaction of the Engineer.

The handling of material, fabrication, blocking of partially completed members and movement of completed members shall be done in such a manner that the safety of workmen and inspection personnel will not be impaired at any time.

All weathering structural steel and other designated steels requiring weathering characteristics shall be maintained at all levels of fabrication and construction as nearly as possible in the condition received from the mill. All shop welds shall be cleaned by power grinding or by blast cleaning to remove welding flux, slag and splatter prior to shipment from the plant.

After all erection, welding and slab concrete placement has been completed, the Contractor shall restore the surfaces of all weathering structural steel as nearly as possible to the above described condition by solvent cleaning, hand cleaning, power brush cleaning or brush-off-blast cleaning, as deemed necessary by the Engineer, to restore the steel to its original clean condition.

All outside surfaces of weathering steel fascia beams, including the underside of the bottom flange, the sides and bottom surfaces of steel bent caps or floor beams and all surfaces of out-rigger-type bent caps extending outside the fascia beams shall receive a Class "B" blast cleaning in addition to the above requirements. No marking will be permitted on the outside face of any fascia beam.

Bolted and Welded Structures

441.7. Cutting, Planing, Facing and Fit of Members. Sheared edges of plates of more than five-eighths inch thickness and carrying calculated stress shall be planed to a depth of one-fourth inch. Re-entrant cuts shall be filleted to a minimum radius of three-fourths inch, except for the corners of welding access cope holes adjacent to a flange. The fillet and its contiguous cuts shall meet without offset or cutting past the point of tangency (no gouges, etc.).

Unless otherwise permitted by the plans, steel plates for main members shall be cut and fabricated so that the primary direction of rolling is parallel to the direction of the main tensile and/or compressive stresses.

Steel and weld metal may be oxygen cut, provided a true profile, and a smooth and regular surface free from cracks and notches is secured, by the use of a mechanical guide. Hand cutting shall be done only where approved by the Engineer. (Mill scale and extraneous material shall be removed from the cutting side of A514/A517 steel plates along the lines to be cut.)

Edges of all main members which are sheared or oxygen cut, and all other exposed edges to be painted, shall be rounded or chamfered to an approximate one-sixteenth inch dimension by grinding.

In all oxygen cutting, the flame shall be adjusted and manipulated to avoid cutting inside the prescribed lines. Roughness of the cut surfaces shall not be greater than ANSI surface roughness value of 1000 for material up to 4 inches thick and 1600 for material 4 inches to 8 inches thick, except that member ends not subject to calculated stress shall meet ANSI surface roughness value of 2000. Roughness exceeding these values and occasional notches or gouges not more than three-sixteenths of an inch deep, on otherwise satisfactory surfaces, shall be removed by machining or grinding. Cut edges shall be left free of slag. Correction of defects shall be faired to the oxygen cut edges with a slope not exceeding one in 10.

Air carbon-arc or oxygen gouging, oxygen cutting, chipping, or grinding may be used for joint preparation or the removal of defective work or material. Oxygen gouging shall not be used on A514/A517 or A588 weathering steel.

Oxygen cut edges of ASTM A440 steel one-half of an inch or greater in thickness shall be removed to a depth of at least one-eighth of an inch by machining or grinding, except that machine flame cut edges need not be removed, if they are softened after cutting by heating the cut edge uniformly and progressively to a red heat to a depth of at least one-sixteenth of an inch from the edge (1150 F to 1250 F), or post heated by a torch attached to and following the cutting torch with the tips, gas pressure, speed of travel and the distance of the post heating torch from the cutting torch regulated to the thickness of the steel to accomplish the annealing effect described above.

The top and bottom surfaces of steel slabs, base plates and cap plates of columns and pedestals shall be planed or else the steel slabs and base plates hot-straightened. Parts of members in contact with plates shall be faced to fit. For plates over 4 inches thick, top surfaces shall be planed to a ANSI surface roughness value of 250.

Surfaces of bearing plates intended for sliding contact shall have an ANSI surface roughness value of 125.

In planing the surfaces of expansion bearings, the cut of the tool shall be in the direction of expansion.

When stiffeners are required by the plans to be milled, the milled surface shall meet ANSI surface roughness value of 500, and shall provide an even bearing against the flange. Tight-fit, when specified on the plans, shall have at least one point bearing on the flange surface and the remainder with a maximum clearance of one-sixteenth of an inch at any point. Where stiffeners are to be welded to the flange, the opening prior to welding shall not exceed three-sixteenths of an inch, with the fillet weld size increased by the amount of the opening.

Unwelded, cold-bent, load-carrying, rolled-steel plates shall conform to the following:

(1) The bend line shall be at right angles to the direction of rolling.

(2) Bending shall be done so that no cracking of the plate occurs. Minimum bend radii, measured in the concave face of the metal, are shown in Table 1.

Thickness (t) in inches	Up to 1/2	Over 1/2 to 1	Over 1 to 1/2	Over 1 1/2 to 2 1/2	Over 2 1/2 to 4
Minimum Bend Radii	2t	2 1/2 t	3t	3 1/2 t	4t

High strength steel over 1/2" thick may require hot bending for small radii. For short radius on High Strength (HS) or High Yield Carbon (HYC) Steels, the plates shall be hot bent at a temperature not greater than 1200F.

Allowance for springback of A514/A517 steel should be about 3 times that for carbon steel. For break press forming, the lower die span should be at least 16 times the plate thickness. Multiple hits are advisable. If A514/A517 steel plates to be bent are heated to a temperature greater than 1125 F, they must be requenched and tempered in accordance with the producing mill's practice.

Hot bent plates shall conform to the requirements of (1) above.

TABLE 1

BEND RADII FOR ALL GRADES

OF STRUCTURAL STEEL

(3) Before bending, the corners of the plate shall be rounded to a radius of one-sixteenth of an inch throughout the portion of the plate to be bent.

Finished machining, boring and straightening shall be subsequent to annealing or normalizing structural members. Normalizing and annealing (full annealing) shall be as defined in ASTM E44. The temperatures shall be maintained uniformly throughout the furnace during the heating and cooling so that the temperature at any points on the member will not differ by more than 100 F.

A514 and/or A517 steel shall not be annealed or normalized and shall be stress relieved only with the approval of the Engineer.

The holding temperature for stress relieving A514 and/or A517 steel shall not exceed 1100 F, except that 950 F shall be maximum for welds and 6 inches surrounding welds.

When required by the plans, bridge shoes, pedestals or other parts which are built up by welding sections of plate together shall be stress relieved in accordance with approved procedures.

441.8. **Repair of Defects.**

(1) Correction of Defects on Edges to be Welded.

(a) Correction of cutting defects and of occasional notches or gouges less than seven-sixteenths of an inch deep for material up to 4 inches thick, and less than five-eighths of an inch for material over 4 inches thick may be made on steel with yield strengths up through 65,000 psi by welding.

Discontinuities or nonmetallic stringers, opening in plate edges which form the faces of groove welds, which will subsequently be fused with the weld, shall be removed to a depth of five-eighths of an inch and repaired by welding. Laminations opening to these edges shall be removed. Weld repairs shall be made after suitably preparing the defect, welding with low hydrogen electrodes not exceeding five-thirty-second inch in diameter, observing the applicable requirements of SDHPT Bulletin C-5, and grinding the completed weld smooth and flush with the adjacent surfaces.

(b) Occasional notches, gouges or defects in oxygen cut edges of A514/A517 steel may be repaired by welding, when approved by the Engineer under the following conditions:

Cutting defects not more than three-sixteenths of an inch deep in plate edges which will form the faces of a groove weld joint, and which will subsequently be completely fused with the weld may be repaired by welding. Discontinuities or nonmetallic stringers opening to these edges shall be removed to a depth of one-fourth of an inch below the surface by grinding or chipping and the gouge repaired by welding. Laminations opening to these edges shall be removed.

Cutting defects not more than three-sixteenths of an inch deep in plate edges which will form a fillet-welded corner joint shall be repaired by welding only on the part of the edge which will become the faying surface for the joint and the fusion zone of the fillet weld. The part of the defect outside the toe of the completed fillet weld shall be removed by machining or grinding and faired to the oxygen cut surface with a slope not exceeding one in 10. If the actual net cross sectional area which would remain after removal of the discontinuity is 98% or greater than the area of the plate based on nominal dimensions, weld repairs shall be made as specified above using E-11018-M electrodes and grinding the completed weld smooth and flush with the adjacent surface to produce a workman like finish.

(2) Correction of Defects in Free Running Edges of All Steel.

(a) Roughness exceeding ANSI surface roughness value of 2000 in oxygen cut surfaces and occasional notches or gouges not more than three-sixteenths of an inch deep on otherwise satisfactory surfaces, shall be removed by machining or grinding to a slope not exceeding one in 10.

(b) In the repair and determination of limits of internal discontinuities visually observed on rolled, sheared or oxygen cut edges and caused by entrapped slag or refractory, deoxidation products, gas pocket or blow holes, the metal removed shall be the minimum necessary to remove the defect or to determine that the permissible limit is not exceeded. All repairs made by welding shall be approved by the Engineer and shall conform to the applicable provisions of SDHPT Bulletin C-5.

The limits of acceptability and the repair of visually observed edge discontinuities in plates 4 inches or less in thickness shall be in accordance with Table 2 where the length of defect is the visible long dimension on the plate edge and the depth, the distance the defect extends into the plate from the edge.

VISIBLE EDGE IMPERFECTIONS FOR PLATE THICKNESS OF 4 INCHES AND UNDER

Description of discontinuity	Repair required
Any discontinuity 1" in length or less.	None - need not be explored.
Any discontinuity over 1" in length and 1/8" maximum depth.	None - depth should be explored.
Any discontinuity over 1" in length with depth over 1/8" but not greater than 1/4".	Remove - need not weld.
Any discontinuity over 1" in length with depth over 1/4" but not greater than 1".	Completely remove and weld. Aggregate length of welding not over 20% of plate edge length being repaired.
Any discontinuity over 1" in length with depth greater than 1"	Subject to approval by the Engineer. Gouge out to 1" and block off by welding. Aggregate length of welding not over 20% of plate edge length being repaired unless approved by the Engineer.

Removal of metal by gouging shall be done in a manner assuring adequate width and slope for welding.

Multiple discontinuities should be considered continuous when located in the same plane within 5 percent of the plate thickness and separated by a distance less than the length of the smaller of two adjacent discontinuities.

TABLE 2

REPAIR OF DISCONTINUITIES

(3) Repair of Surface Defects.

The limits of acceptability and repair of surface imperfections for all steels shall be in accordance with ASTM A6.

441.9. Heat Curving. Structural steel with a specified minimum yield point not greater than 50,000 psi may be heat curved. Rolled beams and fabricated girders may not be heat curved if the horizontal radius of curvature measured to the centerline of the web is less than 150 feet or less than the larger of the values calculated (at any and all cross sections throughout the length of the girder or beam) from the following two equations:

$$R = \frac{14\ b\ D}{F_y X t}$$

$$R = \frac{7500\ b}{F_y X}$$

In these equations, F_y is the specified minimum yield point in ksi of steel in the member web, X is the ratio of the total cross-sectional area to the combined cross-sectional area of both flanges, b is the widest flange width in inches, D is the clear distance between flanges in inches, t is the web thickness in inches, and R is the radius in inches.

If the flange thickness exceeds three inches or its width exceeds 30 inches the radius shall not be less than 1000 feet.

Heat curving of individual flange plates may be permitted subject to prior approval of the Engineer.

Camber for rolled beams may be obtained by heating, but girders shall be cambered prior to heat curving by cutting the web to the prescribed arc with proper allowance for shrinkage due to cutting, welding and/or heat curving.

The Contractor shall submit a detailed procedure to the Engineer and obtain his written approval thereof prior to heat curving any beam or girder.

441.10. Color Coding. For each approved steel used, a distinct color code shall be required. The color code shall be as specified in ASTM A6. In addition, white shall be required for A36 steel.

The color code used for other steels not specified in ASTM A6 must be submitted to and approved by the Engineer.

The appropriate color(s) shall be placed on the material upon entry into the shop and shall be carried on all pieces to final fabrication. Loss of code

marking on any piece and with no other positive identification, shall require testing thereof prior to its use, to re-establish positive identity of the material to the satisfaction of the Engineer.

441.11. Straightening Bent Material. The straightening of plates, angles, other shapes, and built-up members, when permitted by the Engineer, shall be done by methods that will not produce fracture or other injury. Straightening of individual pieces shall be done prior to assembly into a built-up member. Distorted built-up members shall be straightened by mechanical means or, if approved by the Engineer, by the carefully planned and supervised application of a limited amount of localized heat, except that heat straightening of A514/A517 steel members shall be done only under rigidly controlled procedures, each application subject to the approval of the Engineer. In no case shall the maximum temperature of the A514/A517 steel exceed 1100F, nor shall the temperature exceed 950F at the weld metal or within 6 inches thereof. Heat shall not be applied directly on weld metal. In all other steels the temperature of the heated area shall not exceed 1200F (a dull red). In all cases the temperature of the steel shall be controlled by approved temperature indicating devices, such as crayons, liquids, or bimetal thermometers.

Following the straightening of a bend or buckle, the surface of the metal shall be carefully inspected for evidence of fracture.

Correction of errors in camber in welded beams and girders of A514/A517 material shall be done only under rigidly controlled procedures, each application subject to approval of the Engineer.

441.12. Pins, Pinholes and Rockers. Pinholes shall be bored true to the specified diameter, smooth and straight, at right angles with the axis of the member, and parallel with each other, unless otherwise required. Pins and pinholes shall be finished to ANSI surface roughness value of 125.

The diameter of the pinhole shall not exceed that of the pin by more than one-fiftieth of an inch for pins, five inches or less in diameter, or one thirty-second of an inch for larger pins. Rockers shall be finished to ANSI surface roughness value of 250.

441.13. Shop Painting. The application of shop paint, and the cleaning and coating of sliding surfaces, pins and pinholes, with a mixture of tallow, shall be in accordance with the Item, "Cleaning, Paint and Painting".

441.14. Marking and Shipping. All structural members shall be marked in accordance with the erection diagram. The markings shall be over the painted surface. In no case shall shop paint be left off in order to preserve original markings on steel to be painted. Match-marks shall be made with paint in addition to the requirements of Articles 441.19 and 441.25.

Members weighing more than 3 tons shall have the weight marked thereon. The loading, transporting, unloading and storing of material shall be conducted so it will be kept clean and free from injury. Bolts of each length and diameter, and loose nuts or washers of each size, shall be packed separately and shipped in boxes, crates, kegs or barrels. A list and description of the contents shall be plainly marked on the outside of each package.

Bolted Structures

441.15. Pitch and Edge Distance of Bolts. Pitch and edge distance not shown on the plans shall be in accordance with the latest edition of AASHTO Standard and Interim Specifications for Highway Bridges.

441.16. Bolt Holes. All holes for bolts shall be either punched or drilled. Material forming parts of a member composed of not more than five thicknesses of metal may be punched one-sixteenth inch larger than the nominal diameter of the bolts, if the thickness of the metal is not greater than three-fourths inch for carbon steel, five-eighths inch for HS or one-half inch for XHS steel. For more than five thicknesses or when any of the main material is thicker than shown herein or when required under Article 441.17, all the holes shall be subpunched or subdrilled three-sixteenths inch smaller, and after assembling, reamed one-sixteenth inch larger, or drilled from the solid to one-sixteenth inch larger than the nominal diameter of the bolts.

For punched holes, the diameter of the die shall not exceed that of the punch by more than one-sixteenth inch. If any holes must be enlarged to admit the bolts, they shall be reamed. Holes shall be clean cut without torn or ragged edges. Poor matching of holes will be cause for rejection.

Reamed, punched and drilled holes shall be cylindrical, perpendicular to the member and one-sixteenth inch larger than the nominal diameter of the bolts. Reamers and drills shall be guided by mechanical means. Only for holes not accessible to mechanically guided equipment shall the guiding be by hand. Reaming and drilling shall be done with twist drills, except that for poorly aligned holes, tapered reamers shall be used in conjunction with a template so placed, and held, to force the reaming to the best center of holes for that group. Connecting parts shall be assembled and held securely during reaming or drilling operations and match-marked before disassembling.

441.17. Preparation of Holes for Field Bolting. Holes in all field splices of main truss members, box girders, continuous I-beams, and plate girders shall be subpunched (or subdrilled, if required by Article 441.16) and reamed while assembled, or drilled full size with all parts assembled, taking into account their relative position in the finished structure due to grade, camber and curvature. The assembly, including camber, alignment, accuracy of holes and milled joints, shall be approved by the Engineer before reaming or drilling full size is started.

All holes for floor beams and stringer end connections shall be subpunched and reamed to a steel template of not less than one inch thickness or reamed while assembled.

Holes for secondary members such as diaframs, laterals, sway bracing, etc., may be punched full size unless subpunching or subdrilling and reaming is required by Article 441.16.

441.18. Accuracy of Holes. Accuracy of all holes punched full size, subpunched or subdrilled, shall be such that a cylindrical pin one-eighth inch smaller in diameter than the nominal size of the punched hole may be entered perpendicular to the face of the member, without drifting, in at least 75 percent of the adjoining holes in the same plane after assembling and prior to any reaming. Pieces not meeting this requirement will be rejected. Any hole which will not pass a pin three-sixteenths inch smaller in diameter than the nominal size of the punched hole will be cause for rejection.

After reaming or drilling, 85 percent of the holes in any adjoining group shall show no offset greater than one thirty-second inch between adjacent thicknesses of metal.

Layout of shop work shall be done so that gage lines for bolts shall not vary from plan dimensions more than one-sixteenth inch. Full size holes in any adjoining group or line shall not vary more than the following:

At least 80 percent of the holes shall be within one-sixteenth inch of plan gage.

Not more than 10 percent of the holes may vary as much as one-eighth inch from plan gage.

Holes varying more than one-eighth inch from plan gage will not be accepted.

441.19. Shop Assembling. Each truss or box girder section shall be assembled in its relative position in the shop before reaming is started. Match-marks shall be stamped in the metal at all field connections, in accordance with erection diagrams, at the time reaming is done.

Rigid bolting or clamping shall hold surfaces of assembled parts or members in close contact before reaming is started.

Adjacent sections of beam and girder units shall be assembled in the proper relative positions each will take in the structure before reaming is started. Match-marks shall be stamped in the metal in accordance with erection diagrams at the time reaming is done.

Surfaces of metal in contact shall be cleaned before assembling.

Disassembling after reaming will be required to remove shavings, burrs, etc.

When bolting is required, shop or field, faying surfaces of all joints, including splice plates, shall be cleaned in accordance with the Item "Structural Bolting".

The members shall be free from twists, bends and other deformations. In no case shall tack welding be used in assembly for bolting.

If necessary, the bolt holes shall be spear-reamed for the admission of bolts preparatory to the shop bolting of full-sized punched material. The spear reamer used for this purpose shall be not more than one-sixteenth inch larger than the nominal diameter of the bolts.

Parts not completely bolted in the shop shall be secured by temporary bolts, insofar as practicable, to prevent damage in shipment and handling.

The drifting done during assembling shall be only that required to bring the parts into position, and not sufficient to enlarge the holes or distort the metal. If any holes must be enlarged to admit bolts, they shall be reamed.

441.20. **Bolted Connections.** High-Strength Bolts and Bolting shall be in conformance with the Item, "Metal for Structures", and the Item, "Structural Bolting". The same criteria shall govern for all types of high-strength bolts where the plans or specifications refer to pitch, edge distance, preparation of holes, etc.

441.21. **Preparation and Fit of Members.** When specified on the plans, abutting joints shall be milled and brought to an even bearing. Where joints are not milled the openings shall not exceed one-fourth of an inch.

Floor beams and girders with end connection angles shall be built to exact length back to back of connection angles. If end connections are faced, the finished thickness of the angles shall be not less than that shown on the detail plans.

Welded Structures

441.22. **Welding.** All welding operations, processes, equipment, materials, qualifications of welders, workmanship and inspection shall be in accordance with SDHPT Bulletin C-5, except as provided in Article 441.32.

Nondestructive testing and inspection as herein described will be required for welding performed in the fabricating shop.

Unless otherwise shown on the plans, nondestructive testing (magnetic particle and radiographic) required in the shop will be done by the Contractor and at his expense. This will include furnishing all materials, equipment, tools, labor and incidentals necessary to perform the required testing. The Department may require further tests as necessary in accor-

dance with Article 5.9. In addition, the Department may perform additional testing, including other types.

All magnetic particle inspection and all radiographic inspection shall be done in the presence of and at the locations selected by the Engineer or his authorized representative. The Engineer shall examine and interpret all tests made.

Magnetic particle inspection shall be in accordance with ASTM Designation E109, "Dry Powder Magnetic Particle Inspection".

Unless otherwise shown on the plans for built-up members (plates girders, floor beams and stringers), magnetic particle inspection will be required on 100 percent of the web to flange and bearing stiffener fillet welds on not less than one fabricated piece (as designated by individual piece marks) for each 15 pieces or fraction thereof when the maximum flange thickness is less than two and one half inches and on not less than one piece for each 10 pieces or fraction thereof when the maximum flange thickness is two and one half inches and over. No magnetic particle inspection will be required for rolled sections. Welds requiring repairs shall be retested by magnetic particle inspection after the repairs are made.

Radiographic equipment, procedures, radiographs, identification marks, penetrameters, examination, report, disposition of radiograph and weld surface preparation shall be in accordance with SDHPT Bulletin C-5.

For shop welds of material 65,000 psi yield strength and less, radiographic inspection will be made of the full flange width of 35 percent of all flange splices where the plate thickness at the weld is 2 inches or less and of 50 percent of all flange splices where it is thicker than 2 inches and of 1/5 the depth of the web of 50 percent of the web splices on each structure. If unacceptable work is found, additional radiographs will be made on sections welded by the same equipment and/or operator just prior to and just after the section containing the defect.

For shop welds on steel that has a specified yield strength over 65,000 psi, radiographic inspection shall be made of all groove welds. These welds shall be inspected not less than 48 hours after they are completed.

Welds requiring repairs shall be retested by radiography after repairs are made. All radiographic inspection and necessary repairs shall be done prior to assembly.

When radiographic inspection of particular welds is required by the plans, this shall be in addition to the radiographic inspection required herein.

The quality of all welds shall comply with Article 203, "Quality of Welds" and repairs will be in accordance with Article 204, "Corrections", of SDHPT Bulletin C-5.

441.23. Preparation of Material for Welding. Dimensional tolerances, straightness and flatness of structural shapes and plates shall be within the limits prescribed by Article 441.6.

Surfaces to be welded shall be smooth, uniform and free from fins, tears and other defects which would adversely affect the quality of the weld. Surfaces to be welded shall be free from loose scale, slag, rust, grease, or other material. Mill scale that withstands vigorous wire brushing or a light film of drying oil or rust inhibitive coating may remain. Finish of bevels of groove welds shall be milled or ground. Oxygen cut bevels without grinding will not be allowed.

When a zinc rich paint, Protection System II, is specified, surfaces within 4 inches of a groove weld joining main stress carrying members and within 2 inches of fillet welds joining diaframs or lateral bracing to stiffeners or gusset plates shall be sandblast cleaned and coated with linseed oil. After welding is completed, the areas shall be sandblast cleaned and painted as required for the specified paint system.

For other paint systems, surfaces within 2 inches of any weld joining main stress carrying members shall be free from any paint or other material that would prevent proper welding.

Sheared plates for webs of built-up members shall be wide enough to allow for trimming of edges where built-in camber is required. Plates with rolled edges used for webs, shall be trimmed by oxygen cutting.

Preparation of edges by oxygen cutting shall be in accordance with Article 441.7.

The faying surfaces of the web and flange plates and the adjacent surfaces that are to be fillet welded shall be cleaned by grinding prior to assembly and welding of web to flange.

441.24. Assembly of Parts. The parts to be joined by fillet welds shall be brought into as close contact as possible, with a maximum separation of three-sixteenths inch. If the separaton is one-sixteenth inch or greater, the leg of the fillet weld shall be increased by an equivalent amount. The separation between faying surfaces of lap joints and of butt joints landing on a backing strip shall not exceed one-sixteenth inch. The fit of joints not sealed by welds throughout their length shall be close enough to exclude water after painting. Where irregularities in rolled shapes or plates, after straightening, prevents this, the procedure necessary to bring them within the above limits shall be subject to the approval of the Engineer. The use of fillers is prohibited, except as specified on the drawings or as approved by the Engineer.

Members to be welded shall be brought into correct alignment and held in position by clamping, welding, or tacking until the joint has been welded.

Adequate clamps must be provided to prevent cupping or warping of the flanges when welding them to the web. The clamping devices must be designed to not interfere with the operation or guiding of the automatic welding equipment.

Temporary stiffeners used for jigs and/or warpage control shall not be tack welded to the flange material. Tacking to the web is permissible if the welds are at least d/6 distance away from the flange where "d" is the web depth. The tack weld shall be removed by grinding flush with the parent metal prior to acceptance.

Suitable allowance shall be made for shrinkage, and the joint shall never be restrained on both sides when welding.

Abutting parts to be joined by groove welds shall be aligned carefully. Regardless of the range of stress, all shop groove welds in flange plates shall be ground smooth and flush with the base metal on all surfaces. This shall apply to both parts of equal thickness and parts of unequal thickness.

The surfaces shall be ground so that the radii at the points of transition will be 4 inches minimum.

When groove welds are used to join materials of different thickness or width, there shall be a smooth transition between offset surfaces with a slope of not greater than 1 in 4 in thickness transition, and to the proper radii in the case of width transition (See Figures 1 and 2).

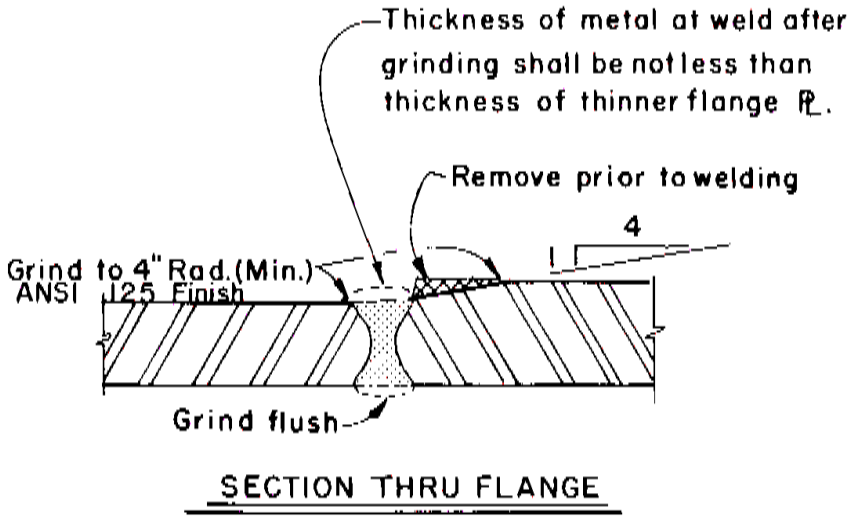

FIGURE 1

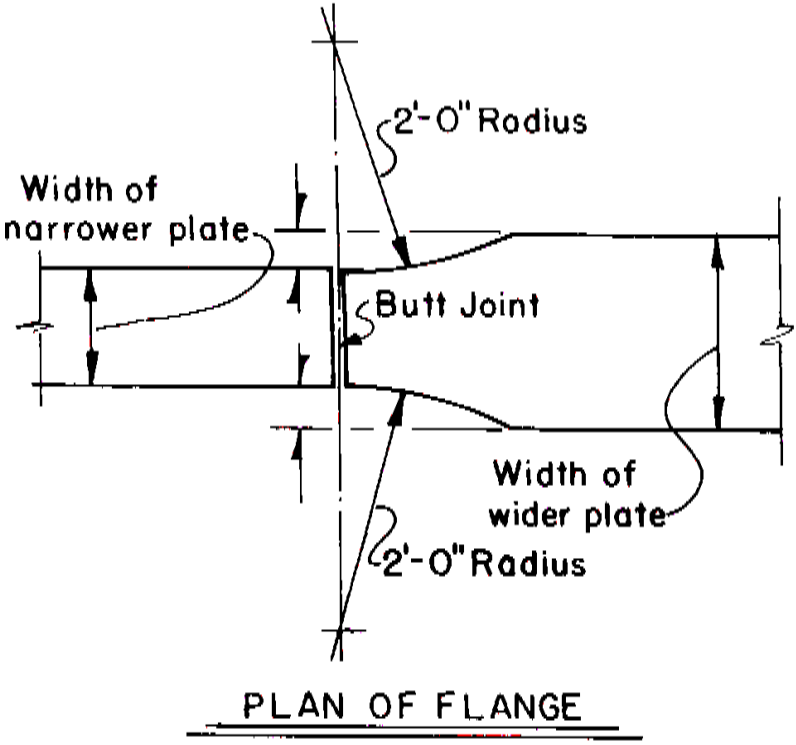

FIGURE 2

Groove welds in web plates need not be ground unless shown on the plans.

Grinding shall be done in the direction of stress, and in a manner that keeps the metal below the blue brittle range. (Below 350F).

Intermediate stiffeners within 12 inches of a splice point shall be shipped tack welded in place. The welding shall be done in the field after the splice is made.

441.25. **End Preparation and Shop Assembly for Field Welds.** Ends of beams and girders shall be prepared in accordance with Figure 3 and the requirements herein or as shown on the plans. The centerline of the land of opposing web and flange bevels shall not deviate from each other by more than one-sixteenth of an inch.

For Shop Assembly, members should be brought into abutting contact in accordance with the blocking diagram. Root faces shall not vary in excess of one-sixteenth of an inch from contact. Corrections by additional cutting and/or grinding shall be made to bring the splice within this tolerance. Finish of bevels for groove welds shall be milled or ground. Oxygen cut bevels without grinding will not be allowed.

Care shall be taken when cutting the bevel adjacent to the web to prevent cutting into the web.

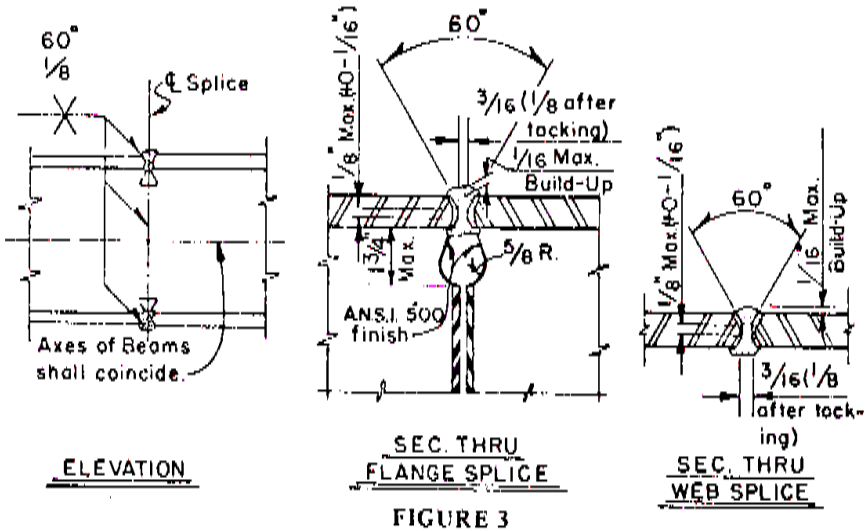

FIGURE 3

End preparation, backing and tolerances for single V groove welds for framing beams or girders shall conform to the details shown on the plans or as permitted by SDHPT Bulletin C-5.

Ends of beams or girders to be welded shall be prepared in the shop taking into account their relative positions in the finished structure due to grade, camber and curvature. Each splice shall be completely shop assembled, checked and while assembled, match-marked.

FIELD ERECTION

441.26. Methods and Equipment. Before starting work, the Contractor shall inform the Engineer fully of the method of erection he proposes to follow and the amount and character of the equipment he proposes to use; the adequacy of which shall be subject to the approval of the Engineer. Such approval shall not relieve the Contractor of the responsibility for the safety or adequacy of his methods or equipment or from carrying out the work in full accordance with the plans and specifications. No work shall be done without the sanction of the Engineer.

The Contractor shall prepare and submit detailed erection plans for plate girders (bolted or welded), trusses, and for all railroad underpass

structures showing procedures, sequence of work, equipment to be used, falsework, etc., so that a check can be made of the adequacy of the proposed procedure. This detailed procedure shall follow the preliminary procedure previously submitted. Field erection plans for I-beam units will not be required unless specified on the plans.

Spot welding for the purpose of eliminating field erection bolts or for holding steel parts together while bolting will not be permitted.

The Contractor shall provide the falsework and all tools, machinery and appliances, including drift pins and fitting-up bolts, necessary for the expeditious handling of the work. Drift pins sufficient to fill at least one-fourth of the field holes for main connections shall be provided.

All steel beams or girders placed over a traveled roadway or a railroad, shall be securely tied and/or braced in accordance with Standard Plan Sheet SS-MEBR to prevent overturning immediately after erection, and until diaframs are permanently in place. The methods to be used shall be submitted on the erection drawings. When railroad or roadway traffic must be maintained beneath girders or beams already placed, traffic shall be protected against falling objects during the erection of diaframs and other structural members, during the placing of cast-in-place concrete and during the erection and dismantling of forms therefor. The protection shall consist of safety nets (1 inch mesh maximum) or a flooring with openings not larger than 1 inch.

441.27. Storing Materials. All material shall be handled in a manner that prevents injury to it. Stored material shall be placed on skids above the ground and kept clean and properly drained. Girders and beams shall be placed upright and shored. Long members, such as columns, shall be supported on skids placed closely enough to prevent excessive deflection.

441.28. Falsework. The falsework shall be properly designed for the loads to be supported and shall be substantially constructed and properly maintained. The Contractor shall prepare and submit to the Engineer falsework plans, including design calculations.

The falsework plans shall be complete in all details of members, connections, equipment, etc., so that a structural check can be made of them.

Approval of the Contractor's plans shall not be considered as relieving him of any responsibility.

441.29. Straightening Bent Material. Straightening of structural members shall be in accordance with Article 441.11.

441.30. Handling and Assembling Material. The parts shall be assembled accurately as shown on the plans. Match-marks shown on the erection drawing shall be shown on each member. The material shall be handled carefully so that no parts will be bent or otherwise damaged. Ham-

mering which will injure or distort the members shall not be done. All bearing and faying surfaces of structural steel in bolted connections shall be cleaned before the connection members are assembled. When A588 steel is used these surfaces shall receive a Class "B" blast cleaning in accordance with the Item, "Cleaning, Paint and Painting" prior to assembly of the connection members. The areas of the outside ply under washers, nuts or bolt heads shall be cleaned prior to installation of the bolts.

Unless erected by the cantilever method, truss spans shall be erected on blocking so located as to provide proper camber. The blocking shall be left in place until the tension chord splices are fully connected and all other truss connections pinned and bolted. Main connections shall have one-half of the holes filled with bolts and erection pins (half bolts and half pins) before swinging the span. Splices and connections carrying traffic during erection shall have three-fourths of the holes so filled.

Fit-up bolts shall be of the same nominal diameter as the connection bolts. Erection pins shall be one thirty-second inch larger.

There shall be no temporary welds for transportation, erection or other purposes on main members, except at approved locations more than one-sixth the depth of the web from the flanges of beams and girders, or in accordance with Standard Plan Sheet SS-MEBR, unless otherwise approved by the Engineer.

441.32. Field Welding. Welding and nondestructive testing shall be in accordance with the Item, "Structural Welding".

441.33. Bearing and Anchorage. Castings, bearing plates, or shoes shall not be placed upon improperly finished bridge seat bearing areas, but shall have a full and even bearing upon the concrete. Castings, bearing plates, or shoes shall be placed on preformed fabric pads manufactured of all new (unused) materials and composed of multiple layers of prestressed cotton duck, 64 plies per inch of finished pad thickness, impregnated and bound with a high quality rubber compound, containing rot and mildew inhibitors and antioxidants, compounded into resilient pads of uniform thickness. The Shore Durometer hardness of the pad shall be not less than 85 nor more than 95. Pads shall be capable of withstanding 10,000 psi compressive stress without breakdown. A tolerance of ±5% will be allowed from the required pad thickness. Unless otherwise shown on the plans the required thickness of pads will be one-fourth of an inch. Anchor bolt holes shall be not more than one-fourth of an inch larger than the bolt diameter.

Upon completion of welding, all splices, distorted bearing pads and/or expansion shoes shall be restored to an equivalent vertical position at 70F. This shall be done by any approved method of temporarily relieving the load on them.

When the concrete is placed below grade, castings, or bearing plates or shoes may be raised to grade on beds of Portland cement mortar consisting of one part cement, two parts sand and a minimum amount of water. The minimum thickness of mortar bed shall be one-eighth inch and the maximum thickness shall be three-eighths inch. Adequate curing shall be provided.

When it is necessary to raise the castings or bearing plates higher above the concrete than provided by the allowable thickness of the above described materials, the area under the built-up portion shall be prepared in accordance with the specification requirements for construction joints and the build-up placed using an approved latex-based grout mixed in accordance with the manufacturer's recommendations. Steel shims or other approved material shall be used in conjunction with one of the specified materials.

Beams and girders shall have practically full bearing on shoes and base plates. Field corrections shall be made to provide a minimum of 75 percent contact of flange to shoe with no separation greater than one thirty-second of an inch.

Corrections by heat and pressure or through the use of tapered steel shims or layers of steel sheets shall be made to provide bearings to the tolerances given above. Small irregularities may be ground off, but care must be taken not to destroy the finish. The shims or steel sheets used shall be galvanized.

Care shall be taken to set expansion shoes normal to the direction of movement of the unit. Full line bearing of the rocker plate to the base plate shall be provided, and shall be interpreted to mean full bearing on a minimum of 85 percent of the contact surfaces.

All foreign matter shall be removed from machine-finished surfaces immediately prior to placing in the structure. Surfaces designed for sliding movement, one upon the other, shall be given a field coat of graphite spring lubricant when placed in the structure. The rolling surface of rocker shoes shall be painted.

Anchor bolts may be set to the exact location in the concrete when it is placed. Accurately cut and placed templates will be required for positioning the bolts.

In lieu of the above, anchor bolt holes shall be drilled in the exact location or may be formed by insertion of oiled and tapered wooden plugs or tapered metal sleeves into the plastic concrete. The bolts shall be set accurately and fixed in position with non-shrink grout completely filling the holes.

The location of the slotted holes in the expansion shoes in relation to the anchor bolts shall be varied with the prevailing temperature. The nuts on anchor bolts at the expansion ends of spans shall be adjusted to permit the free movement of the span and either lock nuts shall be provided or the threads of the anchor bolts burred.

In setting shoes or bearing plates for steel truss spans, proper allowance shall be made for bottom chord elongation due to dead load.

All shoes and rockers shall be set to be vertical at 70F.

441.34. **Grading Deck on Continuous Units.** Forms shall not be erected until after all welding and/or bolting is complete, the unit positioned, and bearings properly set.

An accurate measurement shall be made of the elevations of girder or beams flanges at all grading control points as shown on the plans.

Subsequent grading of forms and placing and finishing of concrete shall be governed by these measurements only, taking into account the dead load deflections of the slab and rail as shown on the dead load deflection diagram.

441.35. **Misfits.** Corrections of minor misfits and a reasonable amount of reaming will be considered a legitimate part of the operation. Any error in shop work which prevents the proper assembling and fitting-up of parts by the moderate use of drift pins or a moderate amount of reaming and slight chipping or cutting shall be reported immediately to the Engineer for his approval of the method of correction.

The correction shall be made in the presence of the Engineer, who will check the material. Such work is to be done at the entire expense of the Contractor.

441.36. **Paint and Painting.** Unless otherwise provided, the application of field paints shall conform to the requirements of the Item, "Cleaning, Paint and Painting".

For railroad structures, which require that the steel be erected and assembled on falsework and moved into place as a unit, all field paint, except the final coat, shall be applied to the steel while on the falsework and prior to moving into final position. Surfaces inaccessible for painting in the final position shall have the final paint coat applied prior to move-in. Touch up of paint damaged due to move-in to final position will be done, and the final field coat applied.

441.37. **Measurement and Payment.** No direct compensation will be made for "Steel Structures". Measurement and payment for quantities of structural metal, concrete, reinforcement, railing and other proposal items

which constitute the completed and accepted structures will be made in accordance with the provisions of pertinent specifications.

ITEM 442

METAL FOR STRUCTURES

442.1. **Description.** This item shall govern for all structural steel, high strength bolts, forgings, steel castings, iron castings, wrought iron, bronze, steel pipe and tubing, aluminum castings and tubing, and other miscellaneous metals used in structures, except reinforcing steel and metal culvert pipe.

442.2. **Process.** All ferrous metals furnished for use under these specifications shall be made by one or more of the following processes only: Open-hearth, basic oxygen, or electric furnace.

442.3. **Structural Steel.**

(1) Steel for Main Members.

Unless otherwise shown on the plans, structural steels listed herein shall conform to the longitudinal Charpy V-notch requirements of Group 1 in accordance with Table A. Sampling and testing shall be in accordance with ASTM A673. The (H) frequency of heat testing shall be used for all material except that (P) frequency shall be used for ASTM A514-517 steels.

(a) Carbon Steel. When shown on the plans and in the proposal as Structural Steel-HYC, the material shall conform to the requirements of ASTM Designation: A36.

(b) High Strength Steel (HS). High strength steel when specified on the plans shall have a minimum required yield point of 50 ksi, and will be designated on the plans and in the proposal as Structural Steel-HS.

When so specified, the steel shall conform to one of the following ASTM Steels subject to thickness and physical requirements of the pertinent ASTM Specification:

1. ASTM Designation: A572, High-Strength Low-Alloy Columbium-Vanadium Steels of Structural Quality, Grade 50. For welded structures the material will be limited to shapes in ASTM Groups 1, 2 and 3; plates and bars limited to a maximum thickness of 2 inches. For mechanically fastened structures, plates and bars will be limited to a maximum thickness of 4 inches.

Material	Thickness - Inches	Group 1 See Notes	Group 2 See Notes	Group 3 See Notes
A-36, A-440 and A-242	Up to 4"	15 ft. lb. at 70F	15 ft. lb. at 40F	15 ft. lb. at 10F
A-572*	Up to 4" mechanically fastened	15 ft. lb. at 70F	15 ft. lb. at 40F	15 ft. lb. at 10F
	Up to 2" welded	15 ft. lb. at 70F	15 ft. lb. at 40F	15 ft. lb. at 10F
A-588*	Up to 4" mechanically fastened	15 ft. lb. at 70F	15 ft. lb. at 40F	15 ft. lb. at 10F
	Up to 2" welded	15 ft. lb. at 70F	15 ft. lb. at 40F	15 ft. lb. at 10F
	Over 2" to 4" welded	20 ft. lb. at 70F	20 ft. lb. at 40F	20 ft. lb. at 10F
A-514-517	Up to 4" mechanically fastened	25 ft. lb. at 30F	25 ft. lb. at 0 F	25 ft. lb. at -30F
	Up to 2 1/2" welded	25 ft. lb. at 30F	25 ft. lb. at 0 F	25 ft. lb. at -30F
	Over 2 1/2" to 4" welded	35 ft. lb. at 30F	35 ft. lb. at 0 F	35 ft. lb. at -30F

Notes:

Group 1: Minimum Service Temperature 0 F and above.
Group 2: Minimum Service Temperature from -1F to -40F.
Group 3: Minimum Service Temperature from -31F to -60F.

*If the yield point of the material exceeds 65 ksi, the temperature for the CVN value for acceptability shall be reduced by 15° F for each increment of 10 ksi above 65 ksi.

TABLE A
LONGITUDINAL CHARPY V-NOTCH REQUIREMENTS

2. ASTM Designation: A588, High-Strength Low-Alloy Structural Steel With 50,000 psi Minimum Yield Point To 4 Inch Thickness.

(c) Extra High Strength Steel (XHS). Extra high strength steel when specified on the plans shall have a minimum required yield point of 90 ksi and will be designated on the plans and in the proposal as Structural Steel-XHS. When so specified, the steel shall conform to the following:

1. ASTM Designation: A514, High-Yield Strength, Quenched and Tempered Alloy Steel Plate.

The steel furnished shall be suitable for welding. Structural shapes and seamless tubing, meeting the other requirements of A514 steels, will be permitted with a maximum tensile strength of 140 ksi for structural shapes and 145 ksi for seamless tubing.

2. ASTM Designation: A517, Pressure Vessel Plates, Alloy Steel, High-Strength, Quenched and Tempered.

The above listed steels are considered weldable. Other steels will require qualification in accordance with SDHPT Bulletin C-5 prior to their use.

(2) Miscellaneous Steel.

(a) Unless otherwise shown on the plans, structural steel for members such as shoes, diaframs, stiffeners (including bearing stiffeners), lateral bracing, diagonals, armor joints and finger joints shall conform to ASTM Designation: A36 or A500, Grade B.

Structural steels used for secondary or nonstress-carrying members will not be subject to impact requirements.

All steels greater than 1/2 inch in thickness used for structural supports for highway signs, luminaires and traffic signals shall conform to the longitudinal Charpy V-notch requirements of Group 1 in accordance with Table A.

(b) Stud shear connectors, slab anchors and anchors on armor joints and finger joints shall conform to the requirements of ASTM Designation: A108, cold drawn bars, Grades 1015, 1018, or 1020, either semi- or fully-killed.

Tensile properties as determined by tests of bar stock after drawing or finishing shall conform to the following:

Tensile Strength (Min.)	60,000 psi
Yield Strength (Min.)	50,000 psi
Elongation (Min.)	20% in 2 inches
Reduction of Area (Min.)	50%

Tensile properties shall be determined in accordance with the applicable section of ASTM Designation: A370.

The manufacturer shall certify that the studs or anchors as delivered conform with the material requirements of this section.

(c) High strength bolts shall conform to the requirements of ASTM Designation: A325 or A490, unless otherwise shown on the plans.

A mill test report or certification will be required indicating that the bolts conform to these requirements.

(d) Steel piling shall conform to the following:

Type	ASTM Designation
Steel H Piling	A36
Metal Shell Piling (heavier than 10 gauge)	A252* Grade 2 or A36
Sheet Piling (Rolled)	A328* Grade A
Sheet Piling (Formed)	A570* Grade A

*A mill certificate shall be furnished by the manufacturer certifying to the results of tests required by the governing specifications.

Sheet piling of a different configuration than that required by the plans may be used provided the section modulus and weight per foot furnished is equal to or greater than required by the plans.

(e) **Deck Plates.** Material for deck plates shall conform to the following:

Corrosive resistant structural steel conforming to ASTM Designation: A242 or A440. The material must be of weldable quality, and shall contain alloying elements that furnishes corrosion resistance at least twice that of copper bearing structural steel. The type of material to be used with its trade name, shall be stated on the shop plans.

(f) **Rail Posts.** Material for rail posts shall conform to the requirements of ASTM Designation: A36 unless otherwise noted on the plans.

442.4. **Steel Forgings.** Steel forgings from which pins, rollers, trunnions, or other forged parts are to be fabricated, shall conform to the requirements of the Standard Specifications for Carbon-Steel Forgings for General Industrial Use, ASTM Designation: A668, Class C, D, F or G. The above will govern for all Railroad underpass structures. The class of material shall be as designated on the plans.

For other structures, for pins 4 inches in diameter or less, material conforming to ASTM Designation: A108, Grades 1016 to 1030 may be used. The material shall have a minimum yield point of 36 ksi. All forgings shall be thoroughly annealed prior to being machined to form finished parts. Material for pins over 4 inches in diameter shall be in accordance with ASTM Designation: A668, Class C, D, F or G. The class of material shall be as designated on the plans.

442.5. **Steel Castings.** Steel castings shall conform to the specifications for Mild to Medium Strength Carbon Steel Castings for General Application, ASTM Designation: A27, Grade 70-36.

When specified on the plans as Class 70, Class 90, or Class 120, the steel castings shall conform to the specified class of ASTM Designation: A486.

442.6. **Iron Castings.** All iron castings shall be true to pattern in form and dimensions, free from pouring faults, sponginess, cracks, blow holes, and other defects in positions affecting their strength and value for the service intended.

The castings specified shall conform to one of the following ASTM Designations:

al	ASTM Designation	Grade
ıtings	A48	Class 30
ıtings	A47	35018
Castings	A536	60-40-18

Sheet lead shall conform to the requirements of the Pig Lead, ASTM Designation: B29.

442.8. Anchor Bolts. Unless shown otherwise on the plans, plain and threaded bars used for anchorage purposes shall conform to requirements of ASTM Designation: A36. Headed bolts and nuts shall conform to requirements of ASTM Designation: A307, Grade A. When high strength anchor bolts are designated on the plans, they shall conform to ASTM Designation: A193-B-7. Nuts for high strength anchor bolts shall conform to ASTM Designation: A194-2H.

Threads for anchor bolts and nuts shall be UNC Series, Class 2 fit for 1 inch diameter and smaller. Threads for anchor bolts and nuts over 1 inch diameter shall be 8UN Series, Class 2 fit.

All anchor bolts and nuts, when galvanized, shall be tapped or chased after galvanizing.

Anchor bolts shall not be galvanized unless otherwise noted on the plans.

A mill test report or certification will be required indicating that the material conforms to these requirements. When heat treated material is specified or required, the test report for certification shall include the necessary certification relative to the heat treating process.

442.9. Steel Pipe. Steel pipe shall conform to the material requirements shown on the plans, or in other designated specifications.

442.10. Steel Tubing. Steel tubing shall conform to ASTM Designation: A500, Grade B, unless otherwise shown on the plans or herein. Tubing conforming to API Standard 5LX, Grade 52, except as noted herein, may be used if produced by a mill recognized as "authorized to produce pipe with the API monogram" and listed as such in the standard API specifications.

The following exceptions to the requirements of API 5LX, Grade 52, will be allowed:

Hydrostatic tests will not be required.

In lieu of a mill test report, a certificate from the manufacturer will be required for each lot or shipment, certifying that the tubing meets the requirements stated above.

442.11. Pipe Rail. Pipe shall be construed to include special extruded and bent shapes and shall be of the section indicated on the plans. Pipe may be rolled or extruded to the shape shown on the plans or may be cold pressed from a round pipe or flat plate.

If cold pressed, the design of the press and dies shall result in a pipe of uniform section and free from die marks. After the pipe has been formed to the required section, it shall be cut to the lengths required. The end cuts and notches shall be made at such angles with the axis of the pipe as required to produce vertical end faces and plumb posts when required by the plans. Cutting and notching of pipe shall be done with a saw or machine guided torch or other means that will insure a neat and workmanlike finish.

442.12. Steel Deep Beam Rail. The rail element shall be either 10 gage (0.1345 ± 0.008 inches nominal thickness) or 12 gage (0.1046 ± 0.008 inches nominal thickness), exclusive of protective coating, as required by the plans. Rail element shall meet all requirements of AASHTO M-180 except as modified on the plans.

The terminal connector shall be of the same material, but shall not be less than 10 gage.

Unless otherwise noted on the plans the rail element shall be galvanized.

442.13. Aluminum.

(1) Unless otherwise shown on the plans, aluminum materials shall conform to the following:

Castings	ASTM B108, Alloy A444-T4
Extrusion	ASTM B221, Alloy 6061-T6
Sheet & Plate	ASTM B209, Alloy 2024-T3

Test specimens from castings shall be cut, either vertically or horizontally, from the lower 14 inches of the tension flange but not at the junction of the rib or base. The curved surfaces shall be flattened prior to machining. Test specimens shall conform to ASTM Designation: E8, Figure 8.

(2) Aluminum Deep Beam Rail.

Material	ASTM Designation	Alloy
Beam Section	B209	2024-T3
Terminal Section	B209	2024-T3

The minimum thickness of the rail element shall be 0.156 inches (nominal) or 0.105 inches (nominal) as required by the plans.

442.14. Fabrication, Erection, and Painting. Fabrication, welding, and erection of structrual metal shall be in accordance with the Item, "Steel Structures", the Item, "Structural Welding", and SDHPT Bulletin C-5. Paint and painting shall be in accordance with the Item, "Cleaning, Paint and Painting". Aluminum or galvanized steel members shall not require painting.

442.15. Galvanizing. Galvanizing of metal fabricated from rolled, pressed, or forged steel shapes, plates, pipe and bars, shall conform to ASTM Designation: A123. Galvanizing of steel or iron castings shall conform to ASTM Designation: A153, Class A. Galvanizing of bolts, nuts, screws, washers, and other miscellaneous hardware, shall conform to ASTM Designation: A153, Class C or D, or B-454, Class 40. The weight of galvanized coating shall be determined according to Test Method Tex-728-I.

Galvanizing will not be required for any material unless specified on the plans or specifications.

442.16. Measurement. Measurement of the quantity of structural metal furnished and placed will be based on the weight of metal in the fabricated structure. The weight of erection bolts, paint, or weld metal shall be excluded.

When increases in size or weights of members have been made which were not ordered but approved by the Engineer, the measurement will be made on the sizes or weights shown on the contract plans.

In determining the weight of structural metal in steel or concrete structures, such items as castings, bearing plates, anchor bolts, drains, deck plates, armor joints, finger joints, and all other metal for which no separate measurement is specified, will be considered as Structural Steel.

The weights of rolled shapes and plates shall be computed on the basis of their nominal weights and dimensions using English measurements as shown on the approved shop plans. The weight of castings will be computed from the dimensions shown on the approved shop drawings. Shoes will be measured by the weights shown on the contract plans, or as specified for castings, if weights are not shown.

Deductions will be made for all cuts, copes, perforations, and all holes except bolt holes.

When computed, the weight of metal will be based on Table I.

Splices will be measured as follows:

(1) No additional weight will be allowed for weld metal in a welded splice.

(2) Where a bolted splice is permitted as an alternate for a welded splice, measurement will be made on the basis of a welded splice.

(3) Where a bolted splice is required, the weight of splice material, bolt heads, washers, and nuts, with no deduction for holes, will be measured.

A change in design concept which either increases or reduces the quantity of metal going into the structure or structures, will be measured by actual computed weights of the metal, and the quantity as shown on the plans and in the contract, will be increased or decreased by the revised weights, as the case may be.

	Pay Weights-Lbs. per Cu. In.				
Material	Steel	Cast Iron	Wrought Iron	Bronze	Lead
Weight	0.2833	0.2604	0.2777	0.3150	0.4085

	High Strength Bolts-Weight per Hundred Units						
Diameter	1/2"	5/8"	3/4"	7/8"	1"	1-1/8"	1-1/4"
Bolt Heads			15	25	36	52	73
Nuts			19	28	41	56	73
Washers			12	17	18	21	27

TABLE I

442.17. Payment. Structural metal will be paid for at the unit price bid per pound for "Structural Steel, HYC", "Structural Steel, HS", or for such other classifications of metal as shown on the plans and in the proposal.

Shipping invoice or acceptance slip weights will not be used as basis for payment.

The quantity to be paid for will be that quantity shown on the contract plans and in the proposal, except as may be modified by the following:

(1) Either party to the contract may request an adjustment of the quantities shown on the contract plans (by each separate bid item), if the weights, calculated as outlined in Article 442.16, vary from those shown on the contract plans by more than the following:

(a) Over 500 tons — one-half of one percent.

(b) 50 tons through 500 tons — one percent.

(c) Less than 50 tons — 1½ percent.

When adjustment is required, the Contractor shall furnish the Engineer three sets of shop bills showing the calculated weights of all parts of the

structure. The weights shall be computed from the approved shop drawings, except as noted in paragraph two of Article 442.16. When this quantity is certified correct by the Engineer, it will become the revised plan quantity. Quantities revised in this manner will not be subject to the provisions of Article 4.5.

(2) When quantities are revised by a change in design the "plan quantity" will be increased or decreased by the amount involved in the design change. Quantities revised in this manner will be subject to the provisions of Article 4.5.

This price shall be full compensation for furnishing all materials and for all fabrication, shopwork, transportation, erection, paint, painting, galvanizing, and for furnishing all equipment, tools, labor, and incidentals necessary to complete the work.

ITEM 443

PERMANENT METAL DECK FORMS

443.1. Description. This item shall govern the use of "Permanent Metal Deck Forms" when used for the forming of bridge slab concrete in accordance with the plans, specifications and with this item.

443.2. Materials. Permanent metal deck forms shall be fabricated from steel conforming to ASTM A446 (Grades A through E) with a galvanized coating class G165 in accordance with ASTM A525.

443.3. Design. The design of permanent metal deck forms shall be in accordance with the requirements of the plans and of this item.

Design calculations covering all maximum stress conditions in forms and supports along with typical sketches of the system proposed and materials to be used will be required prior to fabrication or use of the forms. Calculations shall clearly indicate design spans, applied loads, loads on the support members, acceptable stresses or other evidence of the ability of the system to support the applied loads. Test results submitted as evidence of adequate strength shall be well documented and entirely conclusive that adequate strength is available. End closures, hangers and connections differing from those shown on the plans will be considered if thoroughly detailed and documented. Two sets of the calculations and sketches shall be submitted to the Bridge Division, State Department of Highways and Public Transportation, 11th and Brazos Streets, Austin, Texas 78701, for approval.

The permissible form camber shall be limited to the actual dead load deflection of the form.

Permanent metal deck forms shall not be used in panels where longitudinal deck construction joints are located between stringers.

443.4. Construction Methods. Erection drawings indicating form details, closures, fasteners, supports, connectors, special conditions, size and location of welds and other pertinent information will be required. Five sets of the erection drawings shall be submitted to the Bridge Division, State Department of Highways and Public Transportation, 11th and Brazos Streets, Austin, Texas 78701, in accordance with Article 441.3.

Form sheets shall not be permitted to rest directly on the top of the stringer or floor beam flanges. Sheets shall be securely fastened to form supports and shall have a minimum bearing length of one inch at each end. Form supports shall be placed in direct contact with the flange of stringer or floor beam.

All attachments shall be made by permissible welds, screws, bolts, clips or other approved means. Only welds or bolts shall be used to support vertical loads. Welding and welds shall be in accordance with the provisions of the Item, "Structural Welding" pertaining to fillet welds, except that 1/8-inch fillet welds will be permitted.

All permanently exposed form metal, where the galvanized coating has been damaged, shall be thoroughly cleaned, wire brushed and painted with two coats of zinc oxide-zinc dust primer, Federal Specification TT-P641d, Type II, no color added, to the satisfaction of the Engineer. Minor heat discoloration in areas of welds need not be touched up.

A qualified welder in accordance with the Item, "Structural Welding" will be required.

Flutes shall line up uniformly across the entire span where main reinforcing steel is located in the flute.

Construction joints will not be permitted unless shown on the plans. The location of and forming details for any construction joint used, shall be shown on the erection drawings. Forms below a construction joint must be removed after curing of the slab.

The direction of concrete placement will be such that the upper layer of the form overlay receives load first.

A sequence for uniform vibration of concrete shall be approved by the Engineer prior to concrete placement. Attention must be given to prevent damage to the forms, yet provide proper vibration to prevent voids or honeycomb in the flutes and at headers and/or construction joints.

443.5. Measurement and Payment. No direct measurement or payment will be made for the work to be done, the equipment or materials to be furnished under this item, but shall be considered subsidiary to the bid item, "Class "S" Concrete, (PMD Slab)", "Reinforced Concrete Slab" or as specified on the plans.

ITEM 444

BRIDGE PROTECTIVE ASSEMBLY

444.1. Description. This specification shall govern for furnishing and installing Bridge Protective Assemblies or portion thereof, conforming to the requirements of this specification and to the details shown on the plans.

444.2. Materials. Structural steel for the mounting brackets and protective angle shall conform to ASTM Designation: A36 or as specified on the plans, in accordance with the requirements of the Item, "Metal for Structures". Impact tests will not be required. Unless otherwise shown on the plans all angles, brackets, connectors and other hardware shall be galvanized after fabrication. Signs shall conform to the items and details shown on the plans.

444.3. Construction Methods. Bridge Protective Assemblies, or portions thereof shall be installed as shown on the plans. If sign support brackets and/or protective angle support brackets are to be installed in prestressed concrete beams, the Contractor shall furnish the fabricator with sufficient data so that the required concrete inserts may be properly located in the beams at the time the beams are cast. If the structure spans a roadway which is carrying traffic, the sign shall be installed as soon as practical after the beam is erected, as directed by the Engineer. The vertical clearance to be shown on the sign will be furnished by the Engineer.

444.4. Measurement. The complete bridge protective assembly shall consist of the protective angle with mounting brackets and redwood plank and the clearance sign with mounting brackets and will be measured as each, "Bridge Protective Assembly". Plans may require less than the complete assembly. In this case, measurement will be made as follows:

UNIT	ITEM	DESCRIPTION
Each	"Protective Angle"	Angle, redwood board and angle mounting brackets.
Each	"Protective Angle with Sign Brackets"	Angle, redwood board, angle mounting brackets and sign mounting brackets.
Each	"Sign Bracket"	All brackets necessary to mount one sign.
Each	"Sign and Bracket"	The clearance sign with sign mounting brackets.

444.5. Payment. Payment for bridge protective devices, measured as prescribed above, will be made at the unit price bid for each "Bridge Protective Assembly", "Protective Angle", "Protective Angle with Sign Bracket", "Sign Bracket" or "Sign and Bracket" in place, which payment shall be full compensation for furnishing all materials, including bolts, nuts, washers and anchorage devices, and all labor, tools, equipment and other incidentals required for their installation in accordance with the plans and these specifications.

ITEM 446

CLEANING, PAINT AND PAINTING

446.1. Description. This Item shall govern for the type, quality, source, testing, for the application of paint; for surface cleaning and preparation; for the protection of all traffic, property and/or persons upon, underneath, or near the structure; and, the protection of all parts of the structure against disfigurement from any and all of the painting operations.

Surface conditions and application requirements are specified with the intent to obtain full adhesion of coatings to clean, dry metal and to previously applied coats. This will require careful attention to preparation of surfaces; to prevention of contamination and marring of coatings during and after drying; and to uniform, skillful application of each coat of paint.

446.2. Paint Systems.

(1) Prime Coat.

(a) Protection System I (800 Prime Coat) will require Class "B" blast cleaning, with a minimum of a 4 mil dry film thickness of prime coat paint.

(b) Protection System II (810 Prime Coat) will require Class "A" blast cleaning, with a minimum of a 3.5 mil dry film thickness and a maximum 10 mil dry film thickness of prime coat paint.

(c) Protection System III (720 Rust Inhibitive Coating) will require Class "B" blast cleaning, with a minimum of a 6.0 mil dry film thickness of prime coat paint.

(d) Protection System IV (720 Rust Inhibitive Coating) will require Class "C" Cleaning, with a minimum of a 6.0 mil dry film thickness of prime coat paint.

(e) A Special Protection System will sometimes be specified and will require the type of cleaning, the type and thickness of prime coat and other coats, as shown on the plans, or in Special Provisions to this Item.

(f) For members, which cannot be given a prime coat prior to installation, such as steel piling, regular cleaning will be permitted when Protection System I is specified. Unless otherwise shown on the plans, the cleaning system required for Protection System II or Special Protection System will be required for these members when pertinent.

If a different type of cleaning is required for any of the designated paint systems it will be shown on the Specification Data Sheet.

(2) Appearance Coat. The final appearance coating for any of the prime coat systems may be aluminum (slow dry or fast dry), green or gray as specified on the plans, with a minimum 1.5 mil dry film thickness. Appearance coats of other colors, when required, will have the type of paint, color and mil coverage designated on the plans or in Special Provisions to this Item.

446.3. Paint Designation. The complete system and color required by a particular contract will be shown on the plans as:

"Protection System I - Gray"
"Protection System II - Green"
"Protection System II - Aluminum" or Aluminum (Fast Dry)
"Protection System III - Gray"
"Protection System IV - Aluminum"
"Special Protection System - Green"

Any of these colors may be designated with a particular system. With specific written approval of the Engineer, the Contractor may subsitute System II for a specified System I.

When the paint system is not shown on the plans, Protection System I - Aluminum will be required.

All primary structural steel including diaframs, laterals, finger joints and shoes shall receive cleaning and painting in accordance with the Paint

System shown on the plans. Bearing plates, exposed surfaces of steel H, sheet or metal shell piling, and other miscellaneous structural steel items, except for armor joints, shall be painted in accordance with Protection System I - Aluminum, unless otherwise specified. Armor joints shall be given a prime coat and field touch up prime coat only; an appearance coat will not be required.

446.4. Paint Requirements.

(1) **General.** Paints for System I, System II, System III, System IV, and appearance coats for these systems shall be in accordance with Department D-9-8100 specifications. Information about paint characteristics, thinner requirements, etc., and copies of Specification D-9-8100 are available from the State Department of Highways and Public Transportation, Materials and Tests Engineer, 38th and Jackson St., Austin, Texas 78703.

(2) **Condition.** Paints to be applied shall have been thoroughly mixed and strained. Mixing shall be by mechanical methods and shall be such that the paint is rendered to be a completely homogeneous mixture free of lumps, skins or agglomerates, and shall contain all pigments, vehicle solids and thinners required in the original formulation. Paint containers shall be kept tightly covered and protected from the weather when not in use.

(3) **Thinning.** Paint may be adjusted to the correct application consistency by the use of properly applied heat not to exceed 150°F, or by use of suitable thinners. Caution should be exercised since most paints and thinners are flammable.

446.5. Source of Supply. Not later than 30 days after the date of the authorization to begin work, the Contractor shall notify the Director, Equipment and Procurement Division, State Department of Highways and Public Transportation, 11th and Brazos Streets, Austin, Texas 78701, in writing, of the source of supply of all paints to be used (State stock or outside source), the approximate quantities of each type of paint to be used, and the anticipated delivery dates required for any paints to be purchased from the Department. This notification of source of supply and approximate quantities will be accomplished on a standard SDH&PT form supplied by the Engineer. The execution of this form will bind the Contractor as to his source of supply with no variation of this decision being allowed. This notification will also authorize the Department to deduct cost of paints from his estimate in accordance with the specifications. If the above notice is not given within the 30 day period, the Contractor must purchase the paint on the open market.

Except for quantities of paint of 100 gallons or less, the Contractor shall give the Director, Equipment and Procurement Division, a minimum of 75 days notice as to when exact quantities and shipping dates of paint will be needed.

Paint is stored by the Department in the warehouses located at Seguin, Athens and Post, Texas. Paint will usually be shipped from the warehouse nearest the designation; however, the right is reserved to ship from any warehouse in case of necessity. Shipments will be made direct to the Contractor at the location he designates, with transportation charges to be paid by him. The Contractor shall place his order for State-stocked paint in accordance with the above, through the Engineer.

All paints purchased from the Department will be charged to the Contractor at prices in accordance with the plans. The cost of testing of paints purchased from the Department is included in the price of the paint. Reimbursement to the State will be accomplished by making deductions from the Contractor's monthly and/or final estimate for the cost of paints purchased.

The Contractor shall not use any of these paints on any work which is not required by or which does not constitute a part of his contract. Small quantities of paints, not to exceed 25 gallons, in undamaged and unopened containers, which were purchased from the Department, may be returned to the District Warehouse not later than ten days after completion of all painting on the contract and credit will be given for the original cost of the paint.

All paint required to comply with Federal Specifiations, or "Special Protection Systems", shall be purchased on the open market.

The Contractor may purchase paints required to comply with D-9-8100 Specifications either from the Department or on the open market. Paints purchased on the open market shall not be used unless they have been inspected and tested for compliance with D-9-8100 Specifications. It is the Contractor's responsibility to place orders sufficiently in advance of work to insure delivery of paints meeting specification and inspection requirements. When paints required to comply with D-9-8100 Specifications are purchased on the open market, the Contractor and/or his supplier shall contact the Materials and Tests Engineer in regard to inspection, production and testing requirements.

All costs of testing paint purchased on the open market, whether performed directly by the Department or by commercial laboratories designated by the Department, will be charged to the Contractor. Reimbursement to the State for inspection and testing costs of paints purchased on the open market will be accomplished by making deductions from the Contractor's monthly and/or final estimate.

446.6. Responsibility for Hazards. Some paints are harmful to the health. The Contractor is warned that he is responsible for the safety of his operations. This warning shall absolve the State from blame in the event of harm to persons or property from the Contractor's cleaning and painting operations.

446.7. Place of Application. Unless otherwise provided in the contract or approved in writing by the Engineer, the initial cleaning and application of required prime coat paint shall be done by the Fabricator or his designated cleaning and painting contractor prior to shipment of the steel to the job site.

446.8. Cleaning and Preparation of Surfaces.

(1) **General.** Surfaces to be painted, whether in the shop or field, shall be completely free of oil, grease, moisture, dirt, sand, overspray, welding contamination (slag and/or acid residue), loose or flaking mill scale, rust or paint, and free of any other conditions that will prevent the paint from forming a continuous, uniform, tightly adhering film.

Surfaces shall be completely free of loose particles. Contamination with loose particles shall be determined by the following test:

> Press a strip of filament tape onto the surface in question by rubbing with moderate thumb pressure four times. Leave approximately two inches of one end of the tape free from the surface. Grasp the free end of the tape and remove the tape from the surface with a sharp jerk. The surface shall be considered as contaminated if the removed tape exhibits particles clinging to the tape.

Unless otherwise provided, the inside surface of box members shall be cleaned in accordance with regular cleaning, and painted with a minimum 6.0 mil coating of 720 paint. After all fabrication of the member is com-

pleted, its inside surfaces shall be cleaned by whatever methods are necessary to remove dirt and other foreign substance which may have accumulated during assembly prior to closure. Contact surfaces to be bolted shall not be painted.

For either shop or field painting, before other cleaning operations begin, grease-like contaminants shall be completely removed with clean petroleum solvents, such as cleaning naphtha, applied with clean rags so that the oil substance is actually removed and not simply diluted or spread out over a greater area. The same general requirements for painting over a clean, dry, firm surface shall be applicable to all coats.

Unless a particular cleaning method is specified, any effective method for removal of rust, scale and dirt, such as the use of blast cleaning, hand or rotating metal brushes, scrapers, chisels, hammers, flame cleaning or other means will be acceptable.

(2) **Classes of Cleaning.** When a class of cleaning is specified, the following shall apply in addition to the above requirements:

(a) **Class "A" Blast Cleaning.** A Class "A" Blast Cleaned Surface Finish is defined as one from which all paint, oil, grease, dirt, mill scale, rust, corrosion products, oxides, or other foreign matter have been completely removed from the surface. Very light shadows, very slight streaks, or slight discolorations caused by rust stain, mill scale oxides or residues of paint or coating may remain. At least 95 percent of each square inch of surface area shall be free of all visable residues, and the remainder shall be limited to the light discoloration mentioned above.

(b) **Class "B" Blast Cleaning.** A Class "B" Blast Cleaned Surface Finish is defined as one from which all oil, grease, dirt, rust scale, loose mill scale, loose rust and loose paint or coatings are removed completely. Tight mill scale and tightly-adhered rust, paint and coatings are permitted to remain. Each square inch of surface area to be cleaned shall be exposed to the abrasive blast pattern sufficiently to expose several flecks of the underlying metal.

(c) **Class "C" Cleaning.** Class "C" cleaning is defined as requiring every square inch to be cleaned to completely remove all finish coat (with minimal damage to the underlying primer), any and all exposed rust, loose or flaky primer, and all oxidized or chalky coatings. All exposed metal surfaces shall be cleaned to the requirements of Class "A" cleaning and the edges of the surrounding primer shall be feathered.

All areas cleaned to bare metal shall be spot primed to the requirements of the paint schedule shown on the plans. After spot

priming all spots, areas or entire surface, as necessary, the existing primer shall be brought up to the minimum primer thickness as required by the paint schedule shown on the plans.

(d) Class "D" Cleaning. Class "D" cleaning is defined as the cleaning of all areas revealing exposed rust, iron oxide, peeling or flaking paint and oxidized paint. These areas shall be cleaned by hand scraping and/or wire brushing, or any other method approved by the Engineer, so that all loose rust, iron oxide, peeling or flaking paint, and oxidized paint are removed. All edges or coating surrounding cleaned areas shall be feathered into sound, tightly-adhering coatings.

All cleaned areas shall be spot primed to the requirements of the paint schedule shown on the plans and then top coated after the primer is thoroughly dry.

(3) Field Cleaning and Spot Painting. When the erection or maintenance work is complete, including all bolting, welding, straightening of material, etc., and the Engineer has examined and approved the work, all adhering rust, scale, dirt, grease or other foreign material shall be removed and the unpainted areas cleaned in accordance with the method required under the paint system specified and painted with the required prime coat. Any surfaces from which the prime coat of paint has worn off or in any way fails to meet specification requirements shall be cleaned and repainted. All small cracks and cavities which were not sealed in a watertight manner by the prime coat shall be filled with a pasty mixture of the paint before the second coat is applied.

For field touch-up coating on edges of plates or shapes, rivet heads, bolt heads, or nuts and other parts subjected to special wear, the edges shall first be coated with a longitudinal motion of the paint brush and the rivet heads, bolt heads or nuts, coated with a rotary motion of the brush, followed immediately by the general painting of the entire surface, including the edges, rivet heads, bolt heads and nuts.

The protective coating on machine surfaces and pins, specified in Article 446.9 shall be completely removed as directed for removal of grease and oil herein.

446.9. Painting.

(1) General. Paint shall not be applied to any surface containing moisture discernible with the eye or by the following test:

If temperature and humidity conditions are such that moisture is likely to condense upon the surface, a small area thereon shall be moistened with a damp cloth to apply a clearly defined, thin film of

water. If this thin film evaporates within fifteen minutes, the surface shall be considered safe to paint from the standpoint of continued condensation at that particular time.

Paint shall not be applied at air temperature below 40 F; nor when there is likelihood of change in weather conditions within 2 hours after application which would result in air temperatures below 40 F, or deposition of moisture in the form of rain, snow, condensation, etc., upon the surface. The Engineer reserves the right to require that no paint be applied when impending weather conditions might result in injury to fresh paint.

If, in the opinion of the Engineer, traffic produces an objectionable amount of dust, the Contractor shall, at his own expense, allay the dust for the necessary distance on each side of the bridge and take any other precautions necesary to prevent dust and dirt from coming in contact with freshly painted surfaces or with surfaces before the paint is applied.

Paint shall not be applied closer than 12 inches to a surface which is to be cleaned.

(2) **Application.** Each coat of paint shall be applied so that it will dry to form a smooth, continuous, tightly-adhering film of uniform thickness and appearance, free of brush marks, sags, runs, holidays and overspray. Steel surfaces or surfaces of previously applied coats of paint shall be cleaned by blowing off with clean compressed air, brushing or a combination of the two in order to remove traces of dust or other foreign particles not discernible to the naked eye immediately prior to painting. If necessary, in the opinion of the Engineer, to clean surfaces of previously applied coatings, the surfaces shall be either washed with clean, fresh water or a mild detergent water followed by a complete and thorough rinse with clean, fresh water to remove all traces of detergent. For all systems the dry film thickness shall be measured according to Test Method Tex-728-I.

Spray application of the first coat of prime coat will be permitted only when the surfaces are cleaned by blasting. Except for this limitation or inability to achieve other specification requirements, all coats may be applied by roller, spray, brush or a combination thereof. Any method of application approved by the Engineer may be used to paint inaccessible areas.

All equipment used for paint application shall meet with the approval of the Engineer. Equipment used for spray painting shall have adequate provision for separation of moisture and oil-like contaminants from any air stream in contact with the paint; and all spray guns shall be adequate for the type of paint being used and shall be equipped with spray heads adequate to provide a smooth, uniform coat of paint. (In the case of conventional air spray, the fluid nozzle and air cap shall match as shown in the manufacturer's literature.) Paint pots shall be equipped with regulators and

gauges to independently regulate and indicate fluid pressure and air pressure. Paint pots shall also be equipped with an agitator that is adequate to keep the paint in a homogeneous uniform state. (The agitator shall be in operation at all times the paint is in the pot, regardless of whether painting is in progress or not.) Brushes shall not exceed 4 inches in width; shall be springy and not flabby; and shall be kept free of contaminants.

All painting shall be done by skilled workers. Application of modern specialized coatings requires workers knowledgeable about the characteristics of the various coatings, solvents and substrates. They also must be capable of adjusting equipment and application techniques as dictated by the type paint, weather conditions, environment, size and shape of surface being painted.

(3) **Prime Coat.** After all fabrication work is completed and has been tentatively accepted, all surfaces to be painted shall be cleaned and painted with the required prime coat. Pieces shall not be loaded for shipment until coatings are thoroughly dry. No painting shall be done after material is loaded for shipment. Erection marks for field identification of members shall be painted upon previously painted surfaces. Surfaces to be in contact after shop or field bolting shall be cleaned but not painted.

Machine-finished surfaces which are in sliding contact in the structure shall be clean and coated with a hot mixture of tallow before being shipped. This refers particularly to pins and pinholes. The composition used for coating these machine finished surfaces shall be mixed in the following proportions:

4 lbs. pure tallow

2 lbs. zinc yellow or zinc oxide

1 quart pure raw linseed oil.

When Protection System II is used, surfaces within 4 inches of a weld that joins main stress carrying members and within 2 inches of fillet welds, including the far side, joining diagrams or lateral bracing to stiffeners or gusset plates shall be free of paint. These unpainted surfaces shall be blast cleaned and coated with raw linseed oil. After welding is completed, the areas shall be cleaned and painted in accordance with the required system.

When Protection System I is used, surfaces within 2 inches of a weld that joins the main stress carrying members shall be free of paint. These unpainted surfaces shall be cleaned and coated with raw linseed oil. After welding is completed, the areas shall be cleaned and painted in accordance with the required system.

All surfaces, other than those mentioned, shall be painted, whether or not the surface in question will be in direct contact with concrete.

Unless otherwise shown on the plans or exempted above, the surfaces to be shop painted will include the rolling faces of rockers and base plates, all surfaces of bearing plates, and all surfaces of iron or steel castings, whether or not such surfaces are milled.

Unless otherwise noted on the plans, the top of the top flange of I-beams and/or girders which will be in contact with concrete will not require cleaning or painting when Protectin System I is specified. When Protection System II is specified, the entire surface of the top flange shall be given the required Blast-Cleaning. The outside edges of the top of the top flange for a minimum of one and one-half inches shall be painted in accordance with Protection System II requirements. The remainder of the flange top shall be free of loose nonadhering paint.

The sides of armor joints which will be in contact with concrete need not be painted. The entire armor joint will be given the required cleaning for the protection system which is to be used. Armor joint anchors shall not be painted. If the Contractor/Fabricator elects to paint all surfaces of the armor joint the quality of the painting will be as required by the specifications.

Shop drawings shall reflect the areas of the armor joint, girders and/or flanges which are not to be painted.

Prior to placing the concrete slab, the Contractor shall remove any dirt, loose rust, oil, or any thick coating of loose paint from all surfaces of steel to be in contact with concrete.

(4) **Appearance Coat.** After all concrete has been placed and other work has progressed to the extent that marring of the appearance coat is unlikely, and all other previous paint coats, including any necessary corrective painting, has hardened completely, the required final or appearance coat may be applied. Previously applied paint film including field touch up requires a minimum cure time as shown in the table below prior to application of appearance coat.

Temperature	Days Cure, Min.
77 F and above	8
65 to 77 F	10
55 to 65 F	12
40 to 55 F	14

If concreting operations have damaged the paint, the surface shall be recleaned and repainted. Prime coated surfaces shall be cleaned to remove dirt, grease or other foreign material prior to the application of the appearance coat. Paint that has become defective shall be removed, the metal properly cleaned, and the required prime coat reapplied. Excessive thickness of paint that fails to properly dry or produces blisters in the paint

shall be removed and replaced in accordance with the requirements of the specified system. In no case shall a succeeding coat be applied until the previous coat and all touch up paint has dried throughout the full thickness of the paint film. At the time of acceptance of the structure, the painted portion thereof shall present an even and uniform appearance throughout.

(5) **Paint Improperly Applied.** To uncover evidence of improperly applied paint, the Engineer may, at any time during construction, explore underneath the surface of any paint coats already applied. Whenever unsatisfactory conditions are found, the Engineer will require any and all necessary remedial measures.

All paint which has been applied improperly, applied to improperly cleaned surfaces, fails to dry and harden properly, fails to adhere tightly to underlying metal or other paint film, or does not evidence a normal, workmanlike appearance in conformance with these specifications, shall be repaired or completely removed and replaced at the expense of the Contractor. When the final field coat does not have a uniform color and appearance throughout the structure, it shall be corrected by the use of whatever additional coats or other corrective measures found to be necessary. Freshly applied paint which has not yet set, shall be removed with the use of suitable solvents. Removal of dried paint films shall be either by means of blast cleaning, scraping, or flame torches meeting the approval of the Engineer.

446.10. Measurement. Unless otherwise provided on the plans or specifications, the furnishing of all materials, equipment, supervision, labor, cleaning, scaffolding, protection of traffic and incidentals necessary to complete the work required by this Item will not be measured for payment but will be included in the unit price bid for the item or items recieving the paint.

When indicated as a bid item on the plans, measurement will be by the lump sum for each structure unit as shown on the plans. When units are shown on the plans such as tons of structural steel, linear feet of steel piling or railing or mfbm of timber, these units are for the Contractor's information only.

446.11. Payment. When measurement is not required herein, payment for all of the work and materials to be furnished will be subsidiary to the item or items recieving the paint.

When indicated as a bid item on the plans, the work performed and material furnished as prescribed by this Item, measured as provided under "Measurement", will be paid for at the unit price bid for "Cleaning and Painting Existing Structures", "Cleaning and Painting Existing Structural Steel", "Cleaning and Painting Existing Railing", "Cleaning and Painting Existing Steel Piling", or "Cleaning and Painting Existing

Timber" with the Protection System specified which price shall be full compensation for cleaning, spot painting, and painting, and for furnishing all labor, equipment, materials, scaffolding, protection of traffic, tools and incidentals necessary to complete the work.

Any defective work that needs to be corrected or completely removed and replaced shall be considered subsidiary to this Item.

ITEM 447

STRUCTURAL BOLTING

447.1. Description. This item shall govern for the materials to be used, and for the method of installation of high strength bolts used in structural connections.

447.2. Material.

(1) Bolts of diameters of 1/2 inch to 1-½ inch inclusive, nuts and washers shall conform to the requirements of ASTM Designation: A325 or A490 except as provided herein.

(2) Bolts shall conform to the requirements for heavy hex structural bolts or heavy hex bolts of the ANSI Standard B18.2.1. The length of the bolts shall be such that the point of the bolt will be flush with or outside the face of the nut when completely installed. Dimensions shall conform to Table 1.

(3) When specified on the plans or approved by design change, high strength steel lock-pin and collar fasteners may be used as an alternate for high strength bolts. The shank and head of the high strength steel lock-pin and collar fasteners shall meet the chemical composition and mechanical property requirements of ASTM Designation: A325. The fasteners shall provide a solid shank body of the same nominal diameter and have tensile and shear strength equivalent to or greater than the bolt specified; shall have a cold formed head on one end, of the type and dimensions as approved by the Engineer; a shank length suitable for material thickness fastened, locking grooves, breakneck groove and pull groove on the opposite end. Each fastener shall provide a steel locking collar of proper size for the shank diameter used which by means of suitable installation tools, is cold sweged into the locking grooves forming a head for the grooved end of the fastener after the pull groove section has been removed. The steel locking collar shall be a standard product of an established manufacturer of lock-pin and collar fasteners as approved by the Engineer. Flat washers will not be required when lock-pin and collar fasteners are used.

(4) Unless otherwise specified, threads for structural bolts and nuts up through 1 inch diameter shall be the UNC Series and for over 1 inch

diameter and larger shall be the 8UN Series as specified in ANSI B1.1 and shall have Class 2A tolerance for Bolts and Class 2B tolerance for Nuts. Galvanized nuts shall be tapped or chased after galvanizing.

(5) Circular, beveled and clipped washers shall conform to the requirements of ASTM Designation: F436. Their nominal dimensions shall be in accordance with Table 2 of this specification, with washer tolerances as given in ASTM Designation: F436.

Where necessary, washers may be clipped on one side to the dimension given in Table 2.

(6) ASTM Designations: A325 and A490 provide for three types of high-strength bolts. Any of these types may be used when the structural steel is to be painted. Type 3 bolts, nuts and washers shall be used when weathering steel (A-588) is used. Type 2 bolts may not be used when hot-dip galvanized bolts are required. Bolts and nuts of only one type shall be used for any one structure.

447.3. General.

(1) Surfaces of bolted parts in contact with the bolt head and nut shall not have a slope of more than 1:20 with respect to a plane normal to the bolt axis. Bolted parts shall fit solidly together when assembled and shall not be separated by gaskets or by any other interposed compressible material. Holes shall be punched, sub-punched and reamed, or drilled as required by the Item, "Steel Structures". Holes shall be of a nominal diameter not more than one- sixteenth of an inch in excess of the nominal bolt diameter. Field erection and fit-up of joints and splices shall conform to the requirements of the Item, "Steel Structures".

(2) When assembled, all joint surfaces, including those adjacent to the bolt head, nuts or washers , shall be free of dirt, rust, loose scale, burrs and other matter that will prevent solid seating of the parts.

(3) Prior to final bolting, shop or field, the faying surface of all joints, including splice plates, shall be given a Class "A" Blast Cleaning, in accordance with the Item "Cleaning, Painting and Painting."

(4) Galvanized surfaces shall be lightly scored by wire brushing or sandblasting.

(5) Bolts and nuts are normally shipped with a thin film of oil or wax on the threads as a protection against rust. This coating should not be removed. If the threads are exposed and corrosion has begun, the threads shall be cleaned and a thin coat of oil applied prior to installation. Oil shall be removed from the exposed portions of the bolts and nuts by use of a solvent when the steel is to be painted.

447.4. Identification and Dimensions. Heavy hex structural bolts manufactured to ASTM Designation: A325, Types 1,2 and 3, the dimen-

sions for which are shown in Table 1 and Fig. 1, are identified on the top of the head by the legend "A325", and the manufacturer's symbol. In addition, Type 1 bolts, at the option of the manufacturer, may be marked with three radial lines 120 degrees apart. Type 2 bolts shall be marked with three radial lines 60 degrees apart. Type 3 bolts shall have the "A325" underlined and the manufacturer may add other distinguishing marks indicating that the bolt is of a weathering type. Bolts manufactured to ASTM Designation: A490 are marked with the legend "A490" and the manufacturer's symbol. Heavy hex nuts for A325 bolts are identified on at least one face by the manufacturer's mark and the number "2" or "2H", by three equally spaced circumferential lines, or by the legend "D" or "DH". Heavy hex nuts for A325 Type 3 bolts shall be marked on one face with three circumferential marks and the numeral "3", and with other distinguishing marks the manufacturer may elect to use. Heavy hex nuts for use on A490 bolts shall be marked with the legend "2H" and the manufacturer's mark or by the legend "DH". Washers for A325 Type 3 bolts shall be marked on one face near the outer edge with the numeral "3", or other distinguishing marks indicating that the washer is of a weathering type. The marking on bearing surfaces of nuts and washers shall be depressed.

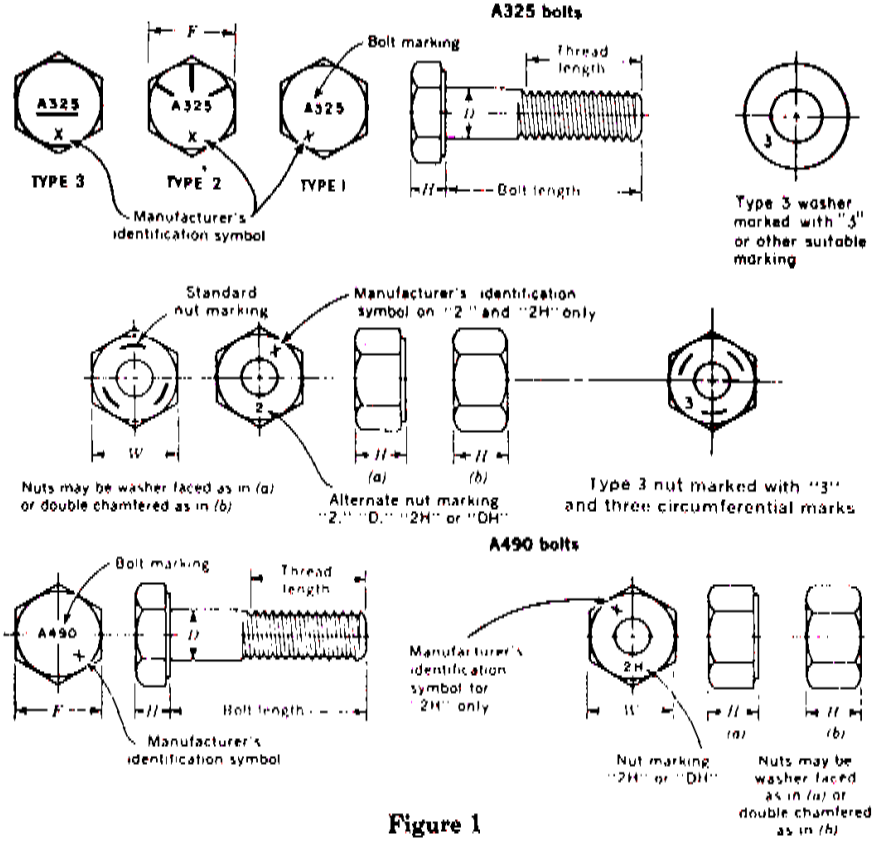

Figure 1

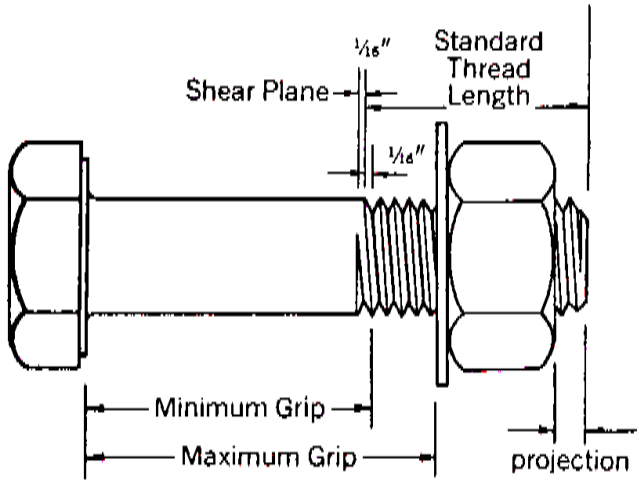

Thread Length and Projection for A325 and A490 Bolts			
Bolt Diam. in.	Standard Thread Length, in.	Available Projection, in.	
		Min.	Max.
½	1	3/32	9/32
⅝	1¼	7/32	13/32
¾	1⅜	7/32	13/32
⅞	1½	7/32	13/32
1	1¾	11/32	17/32
1⅛	2	15/32	21/32
1¼	2	11/32	17/32
1⅜	2¼	15/32	21/32
1½	2¼	11/32	17/32

Nominal Bolt Size, Inches D	Bolt Dimensions, Inches [a] Heavy Hex Structural Bolts			Nut Dimensions, Inches Heavy Hex Nuts	
	Width across flats F	Height, H	Thread length	Width across flats W	Height, H
½	⅞	5/16	1	⅞	31/64
⅝	1 1/16	25/64	1¼	1 1/16	39/64
¾	1¼	15/32	1⅜	1¼	47/64
⅞	1 7/16	35/64	1½	1 7/16	55/64
1	1⅝	39/64	1¾	1⅝	63/64
1⅛	1 13/16	11/16	2	1 13/16	1 7/64
1¼	2	25/32	2	2	1 7/32
1⅜	2 3/16	27/32	2¼	2 3/16	1 11/32
1½	2⅜	15/16	2¼	2⅜	1 15/32

[a] Refer to Figure 1

Table 1

NUT, BOLT AND THREAD DIMENSIONS

Hardened Circular and Clipped Circular Washers

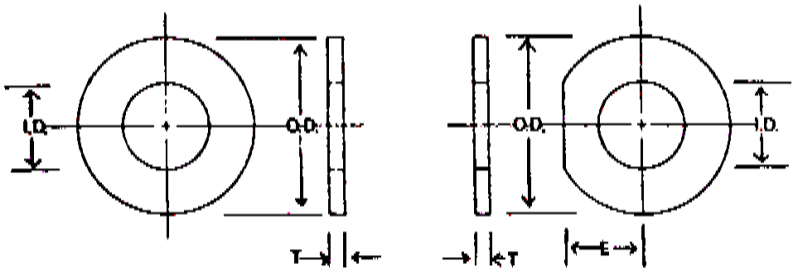

Circular **Clipped Circular**

Bolt Size	Circular and Clipped Circular				Clipped
	Nominal Outside Diameter (O.D.), in.	Nominal Inside Diameter (I.D.), in.	Thickness (T), in.		Nominal Edge Distance (E)[a], in.
			Min.	Max.	
1/2	1 1/16	17/32	0.097	0.177	7/16
5/8	1 5/16	11/16	0.122	0.177	9/16
3/4	1 15/32	13/16	0.122	0.177	21/32
7/8	1 3/4	15/16	0.136	0.177	25/32
1	2	1 1/8	0.136	0.177	7/8
1 1/8	2 1/4	1 1/4	0.136	0.177	1
1 1/4	2 1/2	1 3/8	0.136	0.177	1 3/32
1 3/8	2 3/4	1 1/2	0.136	0.177	1 7/32
1 1/2	3	1 5/8	0.136	0.177	1 5/16
1 3/4	3 3/8	1 7/8	0.178[b]	0.28[b]	1 7/16
2	3 3/4	2 1/8	0.178[b]	0.28[b]	1 3/4
2 1/4	4	2 3/8	0.24[c]	0.34[c]	
2 1/2	4 1/2	2 5/8	0.24[c]	0.34[c]	
2 3/4	5	2 7/8	0.24[c]	0.34[c]	
3	5 1/2	3 1/8	0.24[c]	0.34[c]	
3 1/4	6	3 3/8	0.24[c]	0.34[c]	
3 1/2	6 1/2	3 5/8	0.24[c]	0.34[c]	
3 3/4	7	3 7/8	0.24[c]	0.34[c]	
4	7 1/2	4 1/8	0.24[c]	0.34[c]	

[a] Clipped edge E shall not be closer than 7/8 of the bolt diameter from the center of the washer.

[b] 3/16 in. nominal.

[c] 1/4 in. nominal.

Table 2-A
WASHER DIMENSIONS

Hardened Beveled Washers

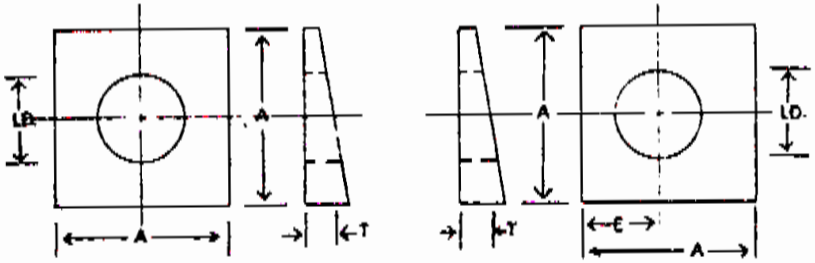

Square

Square Clipped

Bolt Size, in.	Square Beveled and Clipped Square Beveled[a]				Clipped
	Minimum Side Dimension (A), in.	Nominal Inside Diameter (I.D.), in.	Mean Thickness (T), in.	Slope or Taper in Thickness	Nominal Edge Distance (E),[b] in.
1/2	1 3/4	17/32	5/16	1:6	7/16
5/8	1 3/4	11/16	5/16	1:6	9/16
3/4	1 3/4	13/16	5/16	1:6	21/32
7/8	1 3/4	15/16	5/16	1:6	25/32
1	1 3/4	1 1/8	5/16	1:6	7/8
1 1/8	2 1/4	1 1/4	5/16	1:6	1
1 1/4	2 1/4	1 3/8	5/16	1:6	1 3/32
1 3/8	2 1/4	1 1/2	5/16	1:6	1 7/32
1 1/2	2 1/4	1 5/8	5/16	1:6	1 5/16

[a] Rectangular beveled washers shall conform to the dimensions shown above, except that one side may be longer than that shown for the A dimension.

[b] Clipped edge E shall not be closer than 7/8 of the bolt diameter from the center of the washer.

Table 2-B
WASHER DIMENSIONS

447.5. Determination of Bolt Lengths. The grip range of A325 and A490 bolts are shown in Table 3. These bolt lengths are adequate for one circular hardened washer.

Grip Lengths for A325 and A490 Bolts
(Includes Allowance for one hardened washer)

Bolt Length* In.	Bolt Diameter, In.					
	1/2	5/8	3/4	7/8	1	1 1/8 & 1 1/4	1 3/8 & 1 1/2
	Range of Grip Lengths, In.						
1 1/4	5/16-1/2			--	--	-	
1 1/2	9/16-3/4	5/16-1/2	--	--			--
1 3/4	11/16-1	9/16-3/4	5/16-5/8				
2	1 1/16-1 1/4	11/16-1	11/16-7/8	9/16-3/4		--	--
2 1/4	1 5/16-1 1/2	1 1/16-1 1/4	15/16-1 1/8	11/16-1	9/16-3/4	--	--
2 1/2	1 9/16-1 3/4	1 5/16-1 1/2	1 5/16-1 3/8	1 1/16-1 1/4	11/16-1	9/16-3/4	--
2 3/4	1 13/16-2	1 9/16-1 3/4	1 7/16-1 5/8	1 5/16-1 1/2	1 1/16-1 1/4	11/16-1	9/16-3/4
3	2 1/16-2 1/4	1 13/16-2	1 11/16-1 7/8	1 9/16-1 3/4	1 5/16-1 1/2	1 1/16-1 3/4	11/16-1
3 1/4	2 5/16-2 1/2	2 1/16-2 1/4	1 15/16-2 1/8	1 13/16-2	1 9/16-1 3/4	1 5/16-1 1/2	1 1/16-1 3/4
3 1/2	2 9/16-2 3/4	2 5/16-2 1/2	2 1/16-2 3/8	2 1/16-2 1/4	1 13/16-2	1 9/16-1 3/4	1 5/16-1 1/2
3 3/4	2 13/16-3	2 9/16-2 3/4	2 3/16-2 5/8	2 5/16-2 1/2	2 1/16-2 1/4	1 13/16-2	1 9/16-1 3/4
4	3 1/16-3 1/4	2 13/16-3	2 11/16-2 7/8	2 9/16-2 3/4	2 5/16-2 1/2	2 1/16-2 1/4	1 13/16-2
4 1/4	3 5/16-3 1/2	3 1/16-3 1/4	2 15/16-3 1/8	2 13/16-3	2 9/16-2 3/4	2 5/16-2 1/2	2 1/16-2 1/4
4 1/2	3 9/16-3 3/4	3 5/16-3 1/2	3 5/16-3 1/8	3 1/16-3 1/4	2 13/16-3	2 9/16-2 3/4	2 5/16-2 1/2
4 3/4	3 13/16-4	3 9/16-3 3/4	3 7/16-3 5/8	3 5/16-3 1/2	3 1/16-3 1/4	2 13/16-3	2 9/16-2 3/4
5	4 1/16-4 1/4	3 13/16-4	3 11/16-3 7/8	3 9/16-3 3/4	3 5/16-3 1/2	3 1/16-3 1/4	2 13/16-3
5 1/4	4 5/16-4 1/2	4 1/16-4 1/4	3 15/16-4 1/8	3 13/16-4	3 9/16-3 3/4	3 5/16-3 1/2	3 1/16-3 1/4
5 1/2	4 9/16-4 3/4	4 5/16-4 1/2	4 3/16-4 3/8	4 1/16-4 1/4	3 13/16-4	3 9/16-3 3/4	3 5/16-3 1/2
5 3/4	4 13/16-5	4 9/16-4 3/4	4 7/16-4 5/8	4 5/16-4 1/2	4 1/16-4 1/4	3 13/16-4	3 9/16-3 3/4
6	5 1/16-5 1/4	4 13/16-5	4 11/16-4 7/8	4 9/16-4 3/4	4 5/16-4 1/2	4 1/16-4 1/4	3 13/16-4
6 1/4	5 5/16-5 1/2	5 1/16-5 1/4	4 15/16-5 1/8	4 13/16-5	4 9/16-4 3/4	4 5/16-4 1/2	4 1/16-4 1/4
6 1/2	5 9/16-5 3/4	5 5/16-5 1/2	5 3/16-5 3/8	5 1/16-5 1/4	4 13/16-5	4 9/16-4 3/4	4 5/16-4 1/2
6 3/4	5 13/16-6	5 9/16-5 3/4	5 7/16-5 5/8	5 5/16-5 1/2	5 1/16-5 1/4	4 13/16-5	4 9/16-4 3/4
7	6 1/16-6 1/4	5 13/16-6	5 11/16-5 7/8	5 9/16-5 3/4	5 5/16-5 1/2	5 1/16-5 1/4	4 13/16-5
7 1/4	6 5/16-6 1/2	6 1/16-6 1/4	5 15/16-6 1/8	5 13/16-6	5 9/16-5 3/4	5 5/16-5 1/2	5 1/16-5 1/4
7 1/2	6 9/16-6 3/4	6 5/16-6 1/2	6 3/16-6 3/8	6 1/16-6 1/4	5 13/16-6	5 9/16-5 3/4	5 5/16-5 1/2
7 3/4	6 13/16-7	6 9/16-6 3/4	6 7/16-6 5/8	6 5/16-6 1/2	6 1/16-6 1/4	5 13/16-6	5 9/16-5 3/4
8	7 1/16-7 1/4	6 13/16-7	6 11/16-6 7/8	6 9/16-6 3/4	6 5/16-6 1/2	6 1/16-6 1/4	5 13/16-6
8 1/4	7 5/16-7 1/2	7 1/16-7 1/4	6 15/16-7 1/8	6 13/16-7	6 9/16-6 3/4	6 5/16-6 1/2	6 1/16-6 1/4
8 1/2	7 9/16-7 3/4	7 5/16-7 1/2	7 3/16-7 3/8	7 1/16-7 1/4	6 13/16-7	6 9/16-6 3/4	6 5/16-6 1/2
8 3/4	7 13/16-	7 9/16-7 3/4	7 7/16-7 5/8	7 5/16-7 1/2	7 1/16-7 1/4	6 13/16-7	6 9/16-6 3/4
9	8 1/16-8 1/4	7 13/16-8	7 11/16-7 7/8	7 9/16-7 3/4	7 5/16-7 1/2	7 1/16-7 1/4	6 13/16-7

*Lengths above 9 inches are also available. Consult supplier for specific information and data.

Table 3. Length of Bolts.

447.6. Construction Methods.

(1) Threaded bolts shall be installed with a hardened washer under either the nut or bolt head, whichever is turned in tightening. When the outer plies being fastened have a yield strength of less than 40 KSI, a hardened washer shall be installed under both the head and nut when A490 bolts are used.

(2) All fasteners shall be tightened to give at least the required minimum bolt tension values shown in Table 4 on completion of the joint for the grade and size fastener used.

When lock-pin and collar fasteners are used, the installation tools, methods and procedure shall be as approved by the Engineer.

Nominal Bolt Size, Inches	Minimum Fastener Tension[a] in Thousands of Pounds (kips)	
	A325 Bolts	A490 Bolts
½	12	15
⅝	19	24
¾	28	35
⅞	39	49
1	51	64
1⅛	56	80
1¼	71	102
1⅜	85	121
1½	103	148

[a] Equal to 70% of specified minimum tensile strengths of bolts, rounded off to the nearest kip.

Table 4

FASTENER TENSION

(3) The following procedure shall apply for bolt installation of a complete connection, regardless of the method of tightening.

(a) A minimum of 20 percent of the holes at a bolted connection shall be filled with erection pins to "fair-up" all holes (each flange and web).

(b) Install bolts in all remaining holes.

(c) Tighten a minimum of 25 percent of the bolts, following a pattern of progression from the center, or most rigid part of the joint toward the free edges, making sure that all plies of the metal in the connection are properly fitted and in contact. Mark these bolts as fit-up bolts.

(d) Tighten all the remaining bolts by the required amount. Remove the erection pins, fill these remaining holes with bolts, and loosen all A325 bolts used for fit-up, and replace all A490 bolts used for fit-up. Tighten these bolts by the required amount.

(e) The tightening crew shall mark finished work with identifying symbol and the Inspector will mark accepted work.

(4) Threaded bolts shall be tightened by power wrenches of adequate capacity and sufficiently supplied with air to perform the required tightening in approximately 10 seconds, by one of the following methods:

(a) The Turn-of-the-Nut Method.

(b) The Calibrated-Power Wrench Method.

(5) Turn-of-the-Nut Method of tightening.

(a) Tighten all bolts not used as fit-up bolts to a "snug-tight" condition. (A snug-tight condition defined as the tightness attained by a few impacts of the power wrench or the full effort of a man using an ordinary spud wrench.)

(b) Tighten the nuts or bolts by the amount specified in Table 5. During this operation there shall be no rotation of the part not turned by the wrench. The non-turning element must be held by an adequate wrench.

(c) Follow steps (d) and (e) shown in Subsection (3).

When lock-pin and collar fasteners are used, the installation tools, methods and procedure shall be as approved by the Engineer.

Bolt Length (as measured from underside of head to extreme end of point)	Disposition of Outer Faces of Bolted Parts		
	Both faces normal to bolt axis	One face normal to bolt axis and other face sloped not more than 1:20 (bevel washer not used)	Both faces sloped not more than 1:20 from normal to bolt axis (bevel washers not used)
Up to and including 4 diameters	1/3 turn	1/2 turn	2/3 turn
Over 4 diameters but not exceeding 8 diameters	1/2 turn	2/3 turn	5/6 turn
Over 8 diameters but not exceeding 12 diameters[b]	2/3 turn	5/6 turn	1 turn

Nut rotation is relative to bolt, regardless of the element (nut or bolt) being turned. For bolts installed by ½ turn and less, the tolerance should be plus or minus 30°; for bolts installed by ⅔ turn and more, the tolerance should be plus or minus 45°.

TABLE 5

Turn-of-the-Nut Rotation

(6) Calibrated-Power-Wrench Method of tightening. When calibrating power wrenches, they shall be adjusted to stall-out, or cut-out completely, when a bolt tension of 5% in excess of the value shown in Table 4 is reached. The wrenches shall be calibrated by tightening not less than three typical bolts of each size from the lot to be installed, in a device capable of indicating actual bolt tension and shall be furnished by the Contractor (Skidmore-Wilhelm Bolt Calibrator or equal). The wrenches shall be calibrated at least twice each working day for each bolt diameter being installed. Wrenches shall be recalibrated when significant changes are made in the equipment or hose length, or when a significant difference is noted in the surface condition of the bolts, nuts or washers.

After proper calibration, the following procedures shall be followed:

(a) Tighten all bolts not used as fit-up bolts to the tension required in Table 4.

(b) Follow steps (d) and (e) shown in Subsection (3).

A490 bolts and galvanized A325 bolts shall not be reused. Other A325 bolts may be reused if approved by the Engineer. Retightening previously

tightened bolts which may have been loosened by the tightening of adjacent bolts will not be considered as reuse.

447.7. **Inspection.** Procedures for calibration of wrenches and installation of bolts shall be as approved by the Engineer. The inspector will observe the bolt installation to determine that these procedures are followed.

Bolts tightened by the turn-of-the-nut method shall have the outer face of the nut match-marked with the protruding bolt point before final tightening, thus affording the inspector visual means of noting the actual rotation. Such marks shall be made by the operator with a keel, crayon, or spot of paint, after the bolts have been brought up to snug-tight.

The following procedure shall be used to inspect the calibrated power-wrench method of bolt tightening:

Calibrated power-wrench shall be recalibrated as necessary to assure that they are tightening the bolts to the required minimum. During actual bolt tightening, every connection shall have a minimum of 5 percent of the bolts, but not less than one bolt, checked. If any bolt check indicates less than the rotation required by Table 5, the wrench shall be recalibrated and the bolts in the connection shall be re-impacted with the recalibrated wrench as necessary to assure proper tension in all bolts.

The wrench shall be returned to spot check (about 1 in 15) previously tightened bolts which may have been loosened by the tightening of subsequent bolts. Retightening shall continue until all bolts are tightened to the prescribed amount.

When lock-pin and collar fasteners are used or other procedures for tightening threaded bolts are approved by the Engineer, an inspection procedure shall be established to provide a method to assure compliance with the tension requirements of Table 4.

447.8. **Measurement and Payment.** No direct compensation will be made for the installation of bolts or fasteners. Payment will be subsidiary to the pertinent items requiring the use of High Strength Bolts.

Measurement and payment for the bolts required for structural steel joints will be in accordance with the Item, "Metal for Structures".

ITEM 448

STRUCTURAL WELDING

448.1. **Description.** This item shall govern for the field welding of structural steel and reinforcing steel.

Provisions are made herein for the welding of the types of steel listed in Table 2, using the manual shielded metal-arc process, semi-automatic (manual) gas metal-arc welding and flux cored arc welding processes. Other welding processes may be permitted with the specific approval of the Engineer and with qualification of the welding procedure.

Shop fabrication and welding shall be in accordance with the Item, "Steel Structures", and SDHPT Bulletin C-5.

448.2. **General.** All welds including tack welds to be incorporated therein shall be made by a certified welder. Tack welds shall be cleaned and fused thoroughly with the final weld. Defective, cracked or broken tack welds shall be removed.

Certification for welders shall be in conformance with the requirements of SDHPT Bulletin C-6. Miscellaneous welds may be made by a welder qualified in accordance with Article 448.16.

Welds shall be as required by the contract or erection drawings. The location or size shall not be changed without approval of the Engineer.

The welder shall place his identification mark with crayon or paint near the groove welds made by him.

No welding will be allowed when the air temperature is lower than 20 F, when surfaces are wet or exposed to rain, snow, or wind, or when operators are exposed to inclement conditions that will hamper good workmanship.

Any moisture present at the point of welding shall be driven off in accordance with Table III, before welding commences. Wind breaks shall be required for the protection of all welding operations.

There shall be no temporary welds for transportation, erection or other purposes on main members, except at location more than one-sixth the depth of the web from the flanges of beams and girders or as shown on SS-MEBR Plan Sheet or as approved by the Engineer.

On A514/A517 steel, all groove welds in main members and in flanges of beams and girders subject to tensile stress or reversals of stress shall be finished smooth and flush on all surfaces, including edges, by grinding in the direction of applied stress leaving the surface free from depressions. Chipping may be used provided it is followed by such grinding. Parts joined by groove welds connecting plates of unequal thickness or width shall have a smooth transition between offset surfaces at a slope not greater than one in four with the surface of either part. The surfaces shall be ground so that the radii at the points of transition will be 4 inches minimum.

All groove welds, except when produced with the aid of backing, shall have the root of the initial weld gouged, chipped or otherwise removed to

sound metal before welding is started from the second side, except that back gouging will not be required when welding steel piling or armor joints with E 6010 electrodes. The back side shall be thoroughly cleaned before placing back-up pass.

When backing for welds is left in place to become a part of the structure, it shall be a single length insofar as possible. Where more than a single length is needed, they shall be joined by full penetration butt welds. The surfaces of this butt weld shall be ground flush as necessary to obtain proper fit-up in the weld joint.

Before welding over previously deposited metal, all slag shall be removed, and the weld and adjacent base metal shall be cleaned. This requirement shall apply equally to successive layers, successive beads and the crater area.

Arc strikes outside the area of permanent welds must be avoided on all steels. Where they do occur, resulting cracks and blemishes shall be ground out to a smooth contour and checked to insure soundness.

Stringer bead technique shall be used where possible for groove welds on all types of steel. Weaving will not be permitted for A514/A517 steel except in vertical welding, where a weave not exceeding two electrode diameters is permissible for manual shielded metal-arc process.

In all welding processes, the progression for all passes in vertical welding shall be upward using a back step sequence.

Groove welds shall begin and terminate at the ends of a joint on extension bars. Edge preparation and thickness of extension bars shall be the same as that of the member being welded and shall extend a minimum of three-fourths inch beyond the joint. Extension bars shall be removed with a cutting torch or arc-air gouging upon completion and cooling of the weld, and the flange edges shall be ground smooth.

Any defects exposed by the grinding shall be cleaned, filled with weld metal, and reground to a uniform finish. All grinding shall be parallel to the flange. Excess grinding of the parent metal shall be avoided.

448.3. **Filler Metal.** Electrodes for manual shielded metal-arc welding shall conform to the requirments of the latest edition of "Specifications for Mild Steel Covered Arc-Welding Electrodes", AWS A5.1, or to the requirements of the latest edition of "Specifications for Low Alloy Steel Covered Arc-Welding Electrodes", AWS A5.5.

All electrodes and combination of electrode and shielding for gas metal-arc welding for producing weld metal with a minimum specified yield point not exceeding 60,000 psi shall conform to the requirements in the latest edition, "Specification for Mild Steel Electrodes for Gas Metal-Arc Welding",

AWS A5.18, AWS A5.28, or "Specification for Mild Steel Electrodes for Flux Cored Arc Welding", AWS A5.20, applicable for the classifications producing weld metal having a minimum impact strength of 20 ft-lb, Charpy V-notch, at a temperature of 0 F or below.

For weld metal with a minimum specified yield strength exceeding 60,000 psi, the Contractor shall demonstrate that each electrode and flux or combination of electrode and shielding medium proposed for use will produce low alloy weld metal having the mechanical properties listed in Table 1 in the as welded condition.

The mechanical properties shall be determined from a multiple pass weld made in accordance with the test requirements of the latest edition of AWS A5.18, AWS A5.28, or AWS A5.20 as applicable.

GMAW Grade	FCAW Grade	Tensile Strength psi - Min	Yield Strength psi - Min	Elongation, % in 2 inches Min	Impact Strength ft-lb at 0F-Min
ER80S	E80T	80,000	65,000	18	20
ER90S	E90T	90,000	78,000	17	20
ER100S	E100T	100,000	90,000	16	20
ER110S	E110T	110,000	98,000	15	20

TABLE 1

Required Mechanical Properties for GMAW and FCAW Electrodes

The mechanical property tests for Grades ER100S, ER110S, E100T and E110T shall be made using ASTM A514/A517 base metal.

A list of approved electrodes and flux electrode combinations will be maintained by the Department. All electrodes used on Department projects must be on the approved list. For approval of electrodes, the manufacturer shall submit to the Materials and Tests Engineer, 38th and Jackson Streets, Austin, Texas, 78703, certified copies of all tests required by the pertinent AWS Specifications. Tests shall be made on electrodes of the same class, size and brand which were manufactured by the same process and with the same materials as the electrodes to be furnished. Tests must be made and approval renewed every 12 months.

For sizes of electrodes not requiring tests by AWS Specifications, test reports shall be furnished for electrodes of the nearest size and of the same classification. The request for approval shall include the manufacturer's certification that the process and material requirements were the same for manufacturing the tested electrodes and those to be furnished, and new test reports, shall be submitted if any changes are made in process or materials during the effective period.

Class of electrodes required will be as shown in Table 2. Electrodes shall be used with the type of current, the polarity and in the positions permitted by AWS A5.1 and A5.5 for manual shielded metal-arc welding. AWS A5.18 or A5.28 and A5.20 Specifications shall govern for gas metal-arc welding and flux cored arc welding.

Type of Steel	Main Members		Secondary Members		
	Groove & Fillet Welds		Groove & Fillet Welds		
Steel Piling, A53 Pipe, A500, A501, Armor Joints	E6010 E6011 E7016 E7018	E60T-8 E70S-1B ER70S-2 ER70S-3 ER70S-6 ER70S-7	E60XX E70XX E70S-1B E70S-2 E70S-3 E70S-6 E70U-1	E60T-8 E7XT-1 E7XT-5 E7XT-6 E7XT-8	ER70S-2 ER70S-3 ER70S-6 ER70S-7
A36, A441, A572 Grade 50 A588, A242 Deck Plates API Pipe	E7016 E7018 E7XT-1 E7XT-5 E7XT-6 E7XT-8	ER70S-2 ER70S-3 ER70S-6 ER70S-7	E7016 E7018 E7XT-1 E7XT-5 E7XT-6 E7XT-8	ER70S-2 ER70S-3 ER70S-6 ER70S-7	
A514/A517 2½" Thick or Less	E11018M E110T	ER110S	E11018M E110T	ER110S	
A514/A517 Over 2½" Thick	E10018M E100T	ER100S	E10018M E100T	ER100S	
A500, A242, A618 Weathering Steel	E8018,C-3 E80T(3)	ER80S(3)	E8018,C-3 E80T(3) ER80S(3)		
Reinforcing Steel	E7016	E7018			
A572 Grades 60 and 65 for Light Towers	E8016 E8018	ER80T ER80S			

(1) Use of the same type electrode with the next higher mechanical properties, in accordance with AWS A5.1 or A5.5, than those listed will be permitted.

(2) In joints involving base metals of different yield points or strengths, low hydrogen electrodes applicable to the lower strength base metal may be used.

(3) Deposited weld metal for weathering steel shall have the following chemical composition: C, max. %, 0.12; Mn, %, 0.51/1.30; P, max. %, 0.03; S, max %, 0.04; Si, % 0.35/0.80; Cu, %, 0.30/0.75; Ni, %, 0.40/0.80; Cr, %, 0.45/0.70.

TABLE 2

Classifications of Electrodes Permitted

Before use, all electrodes with low hydrogen coverings conforming to AWS A5.1 shall be dried for not less than two hours between 450 and 500 F and electrodes with low hydrogen coverings conforming to AWS A5.5 for not less than one hour at a temperature between 700 and 800 F. Immediately after drying, electrodes shall be stored in ovens held at a temperature of at least 250 F. E70 electrodes not used within four hours, E80 within two hours, E90 within one hour, E100 and E110 within one-half hour after removal from the storage oven shall be redried before use. Electrodes with flux which has been wet, cracked or otherwise damaged, shall not be used. When used for welding A514/A517 steel, electrodes shall be dried at least one hour at temperatures between 700 and 800 F before being used. Electrodes may be redried only once.

Suitable facilities for drying and storage of electrodes shall be furnished at the job site, along with thermometers for checking and controlling the oven temperature.

In humid atmospheres, the times allowed for use without redrying may be reduced.

When a gas or gas mixture is used for gas metal-arc or flux cored arc welding, it shall be of a welding grade having a dew point of -40F or lower. The gas manufacturer shall furnish certification to the Engineer that the gas or gas mixture is suitable for the intended application and will meet the dew point requirements.

Welding wire coils removed from the original package, shall be protected or stored to keep their characteristics or welding properties intact. Rusty coils, or portions of coils that are rusty shall not be used.

Any deviation from the above electrode designation, shall be approved by the Engineer.

448.4 Assembly and Fit-Up. For any welding process, the parts to be joined by fillet welds shall be brought into as close contact as possible, and shall not be separated more than three-sixteenths inch. If the separation is one-sixteenth inch or greater, the leg of the fillet weld shall be increased by the amount of the separation. The separation between faying surfaces of lap joints and of butt joints landing on backing strips shall not exceed one-sixteenth inch.

Splices of beams and girders joined by groove welds shall be carefully aligned with the center of gravity of both members coinciding or each flange vertically offset equally. Beams and girders with offset webs shall be fit with the webs aligned and the flanges offset laterally.

When flanges are offset, or abutting parts differ in thickness or width by more than one-eighth inch, the joint shall be made with the slope of the weld metal to each surface, with a transition not exceeding one in four.

Suitable allowance shall be made for shrinkage and the joint shall never be restrained on both sides in any welding process.

All butt splices shall be made before welding of diaframs or sway bracing in a particular section of a unit. Diaframs and sway bracing may be welded in a unit behind the splice welding to provide stability except where such welding interferes with butt splice adjustments such as at a drop-in segment of a continuous unit. All splices shall be made before welding of beams or girders to shoes.

For manual shielded metal-arc welding, the fit-up procedure listed below shall be used for manual shielded metal-arc welding of groove welds for butt joints:

> Members shall be spaced to provide a three-sixteenth inch root opening at the nearest point. When, at other points of the joint, the spacing provides up to and including a seven-sixteenth inch opening, correction may be made by buildup not exceeding one-eighth inch on each bevel nose. Openings exceeding seven-sixteenth inch shall require rebeveling of the joint to bring it within the maximum buildup limits prescribed above. Buildups must be allowed to cool before proceeding with the welding.
>
> All members shall be brought into correct alignment and held in position by acceptable clamps while being welded.

Deviations from the above fit-up procedures shall be approved by the Engineer.

448.5. Procedure. Shrinkage and distortion shall be controlled through the use of an approved procedure. Passes shall be made symmetrically and shall alternate between both sides of the joint.

For manual shielded metal-arc welding, beam and girder splices shall be made using the sequences shown in Figure 1, except that some members will require fewer or more passes than shown. Welds shall be alternated from side to side to prevent heat buildups on one flange edge. The passes must be arranged between the top and bottom flange to maintain balance and symmetry.

The sequence used in welding of splices in all I-beams shall be to first place four tacks (1-1/2" to 2") in the web.

For I-beam or for built-up girders, place passes one, two and three in the top flange, followed by passes four, five and six in the bottom flange (See Figure 1).

Gouge out and replace passes one and four, which always are placed in the overhead position, before welding on the web. Next, place passes seven

and eight in the web after aligning girder webs with short tacks at approximately 8 inches on centers. (I-beam web is already tacked at this stage).

Alignment clamps may be removed when sufficient weld has been placed to hold the members together, and welding is completed using the sequence shown in Figure 1.

When welding the root passes of beam and girder splices, E7010 electrodes may be used, provided the work is preheated in accordance with Table 3, Note (2). After the root passes are backed up, the E7010 electrode pass shall be completely removed by arc-air gouging and replaced using low hydrogen electrode.

When this procedure is used, it shall be a continuous operation and back gouging and rewelding shall be completed on each splice before starting on another one. The use of E7010 electrodes will not be permitted for welding A514/A517 steel.

For haunch girder splices adjacent to the haunch section, the welding, once started, shall be continuous until a minimum of 50% of the welding in both flanges is completed.

Deviation from the above sequence of weld passes shall be approved by the Engineer.

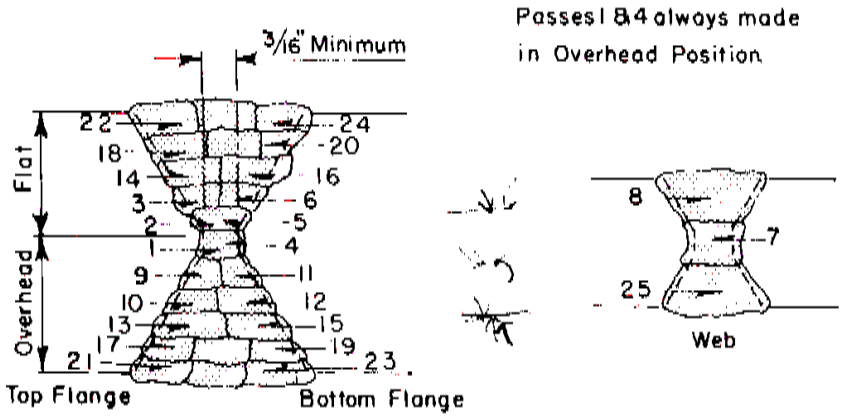

FIGURE 1

WELDING PROCEDURE FOR SPLICES FOR MATERIAL UP TO 50,000 PSI YIELD STRENGTH USING MANUAL SHIELDED METAL-ARC PROCESS

Welding procedures for any special connections shall be approved by the Bridge Division.

Procedures for all gas metal-arc and flux cored arc welding shall be submitted to the Engineer for approval and shall be qualified prior to any field welding.

All Gas Metal-Arc and Flux Cored Arc Welding procedures shall be qualified in accordance with Sections 5 and 7 of SDHPT Bulletin C-5. For each joint to be used in construction, the joint details, electrode classification or grade, electrode diameter, voltage, amperage, travel speed, order and relative position of passes, number and thickness of layers, gas flow, dew point of gas, back gouging, method of cleaning and other pertinent information shall be clearly presented in the Procedure Specification. Fillet welds shall conform to details shown in Figure 2.

Procedures for welding on ASTM A514/A517 steel shall be submitted to the Bridge Engineer, 11th and Brazos Streets, Austin, Texas, 78701, for approval and qualified in accordance with the SDHPT Bulletin C-5 prior to starting work. Variables to be reported shall include welding process, plate thickness, grade of steel, weld position, joint details, type and size of electrode, number and location of passes, welding sequence, back gouging, current and voltage per pass, welding speed, heat input, preheat and maximum interpass temperature. The heat input and maximum interpass temperature shall not exceed the recommendations of the Steel Producer.

The classification and size of electrode, arc length, voltage and amperage shall be suitable for the thickness of the material, type of groove, welding positions and other circumstances attending the work.

(1) Manual shielded metal-arc welding process.

(a) The maximum size of electrode shall be as follows provided the welder has been certified for its use by the Department.

1. 5/16 inch for all welds made in the flat position except root passes.
2. 1/4 inch for horizontal fillet welds.
3. 1/4 inch for root passes of fillet welds made in the flat position and of groove welds made in the flat position with backing and with a root opening of 1/4 inch or more.
4. 5/32 inch for welds made with EXX14 and low hydrogen electrodes in the vertical and overhead positions.
5. 3/16 inch for root passes of groove welds and for all other welds not included under 1, 2, 3 and 4 above.

(b) The root pass size shall be large enough to prevent cracking. The maximum thickness of layers subsequent to the root pass in fillet welds and of all layers in groove welds shall be:

1. 1/4 inch for root passes of groove welds.
2. 1/8 inch for subsequent layers of welds made in the flat position.
3. 3/16 inch for subsequent layers of welds made in the vertical, overhead and horizontal positions.

(c) The maximum size fillet weld which may be made in one pass shall be:

1. 3/8 inch in the flat position.
2. 5/16 inch in horizontal or overhead positions.
3. 1/2 inch in the vertical position.

(2) Manual (semi-automatic) gas metal-arc welding and flux cored arc welding process.

(a) The maximum size electrode used shall be as follows:

1. 5/32 inch for the flat and horizontal positions.
2. 3/32 inch for the vertical position.
3. 5/64 inch for the overhead positions.

(b) The thickness of weld layers, except root and surface layers shall not exceed 1/4 inch. When the root opening of a groove weld is 1/2 inch or greater, a multiple pass split-layer technique shall be used. The split-layer technique shall be used in making all multiple pass welds when the width of the layer exceeds 5/8 inch for gas metal-arc welding or 3/4 inch for flux cored arc welding.

(c) The welding current, arc voltage, gas flow, mode of metal transfer and speed of travel shall be such that each pass will have complete fusion with adjacent base metal and weld metal, and there will be no overlap, excessive porosity or undercutting.

(d) Gas metal-arc welding or flux cored arc welding with external gas shielding shall not be done in a draft or wind. An approved shelter of a material and shape capable of reducing the wind velocity in the vicinity of the welding to a maximum of 5 miles per hour shall be furnished by the Contractor.

(e) The maximum size of a fillet weld made in one pass shall be:

1. 1/2 inch for the flat and vertical position.

2. 3/8 inch for the horizontal position.

3. 5/16 inch for the overhead position.

(3) Preheat.

Preheat ahead of welding both groove and fillet welds (including tack welding) will be required as shown in Table 3.

Preheat and interpass temperatures must be sufficient to prevent crack formation. The preheat temperatures shown in Table 3 are minimums and higher preheats may be necessary in highly restrained welds.

When the base metal is below the required temperature, it shall be preheated so the parts being welded are not less than the specified temperature within 3 inches of the point of welding.

For all groove welds, preheat temperature shall be measured on the side opposite to which the heat is applied at points about three inches away from the joint.

Preheating equipment shall be adequate to maintain the entire joint at or above the specified temperature. When possible, a joint shall be completely welded before it is allowed to cool below the specified temperature but shall always be welded sufficiently to prevent cracking before cooling is permitted.

Usually preheat and interpass temperatures shall not exceed 400 F for thickness up to 1 1/2 inches and 450 F for greater thickness. These temperatures shall never be exceeded on A514/A517 steels.

The welder shall have and use approved equipment for checking preheat and interpass temperatures at all times while welding is in progress.

Thickness of Thickest Part at Point of Welding	Manual or Semi-Automatic Gas Metal-Arc Welding, Flux Cored Arc Welding or Manual Shielded Metal-Arc Welding With Low Hydrogen Electrodes	
	ASTM A 36; A 242; A 441 A 572 Grades 42, 45, and 50; A 588	ASTM A 514/517
To 3/4, incl.	50F	50F
Over 3/4 to 1½, incl.	70F	125F
Over 1½ to 2½, incl.	150F	175F
Over 2½	225F	225F

(1) These temperatures are the minimum required for the thinner material shown for each increment, and higher preheat on a step basis will be required for the thicker material within each increment. Preheat and interpass temperatures must be sufficient to prevent crack formation and welding shall be carried continuously to completion or to a point that will

assure freedom from cracking before the joint is allowed to cool below the minimum specified preheat and interpass temperature. Temperature above those shown may be required for highly restrained welds.

(2) When E7010 electrodes are permitted for tacking or temporary root pass, the material shall be preheated according to the following:

Thickness of Thickest Part	Preheat for Tacking or Temporary Root Pass
1/2" and Less	150 F
9/16" through 3/4"	200 F
13/16" through 1 1/2"	300 F
Over 1 1/2"	400 F

(3) When joining steels of different strengths or thickness with groove welds, the preheat and interpass temperatures for the higher strength steel and the average plate thickness shall be used. For fillet welds, the preheat shall be used for the higher strength steel and the thickest plate being welded.

(4) When the base metal temperature is below 32 F, preheat to at least 70 F and maintain this minimum temperature during welding.

(5) Heat input when welding A514/A517 steel shall not exceed the steel producer's recommendations.

(6) When moisture is present on the base metal it shall be preheated to 200 F before welding is started.

TABLE 3

MINIMUM PREHEAT AND INTERPASS TEMPERATURE FOR MANUAL SHIELDED METAL-ARC WELDING, FLUX CORED ARC WELDING OR GAS METAL-ARC WELDING

448.6. Quality of Welds. Weld metal shall be sound throughout.

There shall be no cracks in any weld or weld pass.

There shall be complete fusion between the weld metal and the base metal and between successive passes throughout the joint.

Welds shall be free from overlap and the base metal free from undercut more than one one-hundredth inch deep when its direction is transverse to the primary stress in the part that is undercut. Undercut shall not be more than one thirty-second inch deep when its direction is parallel to the primary stress in the part that is undercut.

All craters shall be filled to the full cross section of the welds.

All welds on A514/517 steel shall be visually examined for longitudinal or transverse cracks not less than 48 hours after completion of welding.

448.7. Corrections. When welding is unsatisfactory or indicates inferior workmanship, the following corrective measures will be required by the Engineer whose specific approval shall be obtained for making each correction.

When requirements prescribe the removal of part of the weld or a portion of the base metal, removal shall be by oxygen gouging or arc-air gouging.

Oxygen gouging shall not be used on A514/517 steel or for A588 weathering steel.

Backgouging of splices in beams and girders or cutouts of defective welds shall be done by arc-air gouging by a welder qualified to make beam and girder splices.

Where corrections require the deposition of additional weld metal, the sides of the area to be welded shall have sufficient slope to permit depositing new metal.

Defective or unsound welds shall be corrected either by removing and replacing the entire weld, or as follows:

Excessive convexity. Reduce to size by grinding off the excess weld metal.

Shrinkage cracks. Cracks in base metal, craters and excessive porosity. Remove defective portions of base and weld metal down to sound metal and replace with additional sound weld metal.

Undercutting, undersize, and excessive concavity. Clean and deposit additional weld metal.

Overlapping and incomplete fusion. Remove and replace the defective portion of weld.

Slag inclusions. Remove the parts of the weld containing slag and replace with sound weld metal.

Removal of adjacent base metal during welding. Clean and form full size by depositing additional weld metal.

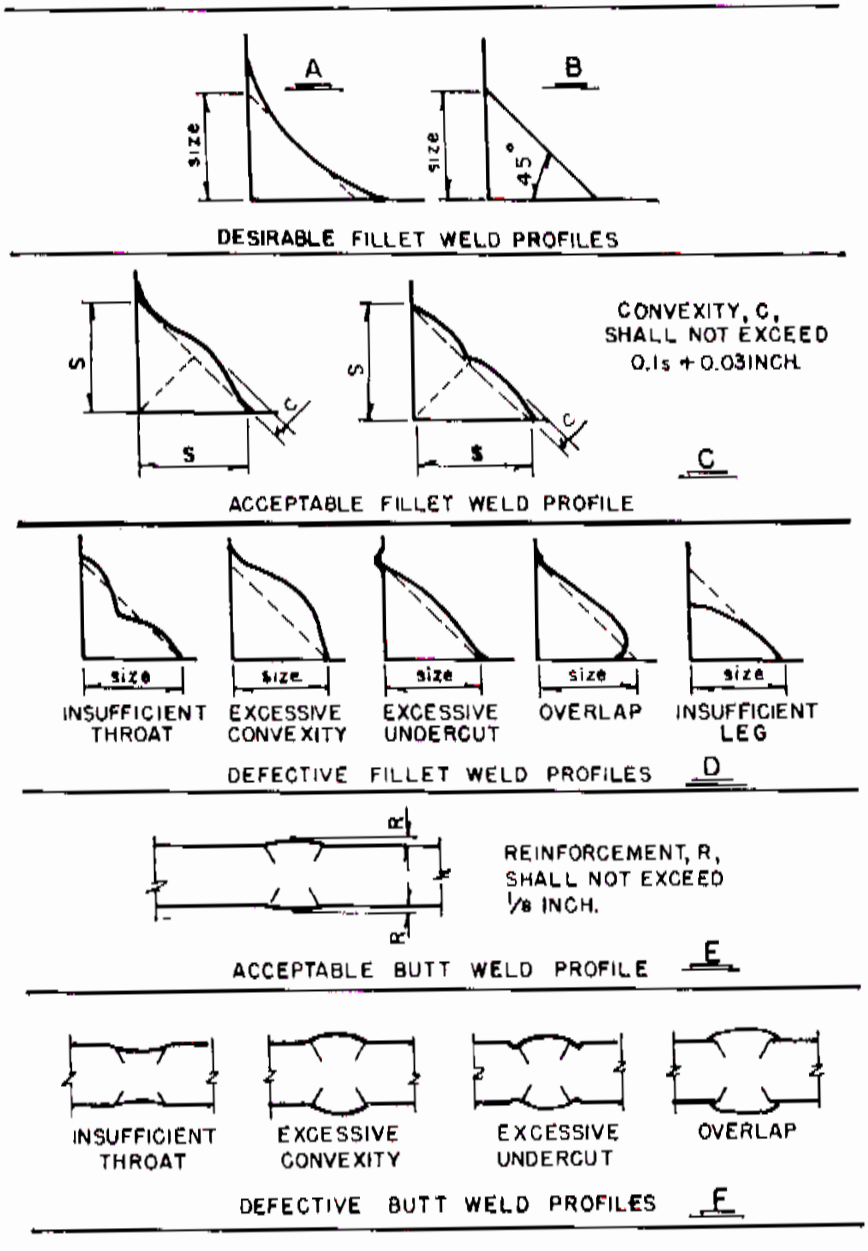

FIGURE 2
Weld Profiles

Where corrections require the deposition of additional weld metal, the electrode used shall be smaller than that used for making the original weld. Surfaces shall be cleaned thoroughly before rewelding.

A cracked weld shall be removed throughout its length, unless the extent of the crack can be ascertained to be limited, in which case the weld metal shall be removed 2 inches beyond each end of the crack and repairs made.

Where work performed after the making of a deficient weld has made the weld inaccessible or has caused new conditions making the correction of the deficiency dangerous or ineffectual, the original conditions shall be restored by removal of welds or members, or both, before making the necessary corrections, or else the deficiency shall be compensated by additional work according to a revised design approved by the Engineer.

Improperly fitted and misaligned parts shall be cut apart and rewelded.

Members distorted by the heat of welding shall be straightened by mechanical means or by the carefully supervised application of a limited amount of localized heat. Heated areas shall not exceed 1200 F as measured by Tempil-sticks or other approved methods for steel up to 65,000 psi yield strength. Parts to be heat straightened shall be substantially free of stress from external forces, except when mechanical means are used in conjunction with the application of heat.

Heat straightening of A514/517 steel shall be done only under rigidly controlled procedures, subject to the approval of the Engineer. In no case shall the maximum temperature of the steel exceed 1100 F. Sharp kinks and bends shall be cause for rejection of the material.

448.8. **Radiographic Inspection.** Radiographic testing required in the field shall be done at the expense of the Contractor by an approved Laboratory, as defined by the Item, "Definition of Terms", having prior approval of the Materials and Tests Engineer. The testing shall include furnishing all materials, equipment, tools, labor and incidentals necessary to perform the required testing. The Department may require further tests as necessary in accordance with Item 5.9, and may perform additional testing, including other types.

Radiographic equipment, procedures, resulting radiographs, identification marks, penetrameters, examination, reports and weld surface preparation shall be in accordance with SDHPT Bulletin C-5. The Engineer will examine and interpret the resulting radiographs.

Radiography shall be done within the time interval specified by the Engineer. Field welds on A514/A517 steel shall not be radiographed until a minimum of 48 hours after completion of the weld.

For field welds, of splices in material with a specified yield strength of less than 65,000 psi, radiographic inspection will be made of the full flange width of 25 percent of all flange splices and of 1/3 the depth of the web of 25 percent of all web splices on each structure (17 inches minimum length). If unacceptable work is found, an additional radiograph (penalty shot) shall be made on a section welded by the same operator just prior to and just following the section containing the defect. Welds requiring repairs shall be retested by radiography after repairs are made. Necessary repairs shall be made prior to any further work being done.

For field welds of splices in material with a specified yield strength greater than 65,000 psi, radiographic inspection shall be made on all flange and web splices. Welds requiring repairs shall be retested by radiography a minimum of 48 hours after repairs are made.

All radiography (penalty shots and retakes), required because of unacceptable welding, shall be performed at the expense of the Contractor.

When radiographic inspection of particular welds is required by the plans, this shall be in addition to the radiographic inspection required herein.

All resulting radiographs shall become the property of the Department and remain with the Engineer.

All groove welds designed to carry primary stresses shall be subject to radiographic inspection. When subjected to such inspections, the presence of any of the following defects in excess of the limits indicated will result in rejection of the defective weld until corrected.

(1) Sections of welds shown to have any cracking, regardless of length or location, incomplete fusion, overlapping, or inadequate penetration shall be judged unacceptable.

(2) Inclusions less than one-sixteenth inch in greatest dimension including slag, porosity and other deleterious material, shall be permitted if well dispersed so that the sum of the greatest dimensions of the inclusions in any linear inch of welded joint shall not exceed three-eighth's inch.

(3) Inclusions one-sixteenth inch or larger in greatest dimension shall be permitted provided such defects do not exceed the limits shown on Figure 3 or in paragraph (2) above.

(4) There shall be no inclusion greater than one-sixteenth inch within one inch of the edge of part or member at the joint or point of restraint.

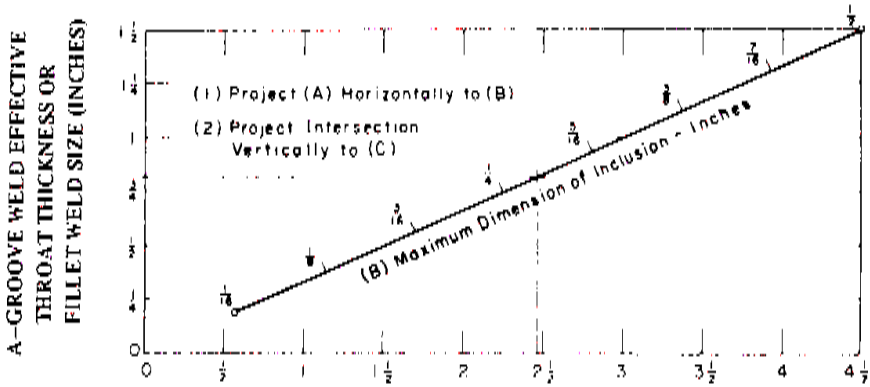

C—MINIMUM CLEARANCE MEASURED ALONG THE LONGITUDINAL AXIS OF THE WELD BETWEEN EDGES OF POROSITY OR FUSION-TYPE DEFECTS (INCHES).
(Larger of Adjacent Defects Governs)

NOTES:

(1) The distance from the edge of an inclusion to the edge of a plate or to any intersecting weld shall be equal to or greater than the clearance between inclusion.

(2) Inclusions with any dimension greater than 1/2 inch are not acceptable.

(3) For joint thickness greater than 1-1/2 inches, the minimum allowable dimension and spacing of inclusions shall be the same as for 1-1/2 inch joints.

(4) Values of (B) obtained by projecting horizontally from (A) are maximum values. Any value of (B) smaller than the maximum is satisfactory.

(5) Values of (C) obtained by projecting vertically from (B) are minimum values. Any value of (C) larger than the minimum is satisfactory.

FIGURE 3
STANDARDS FOR ALLOWABLE INCLUSIONS

Definitions:

Porosity signifies gas pockets or any similar generally globular type voids.

Fusion-type defect signifies slag inclusions and similar elongated defects.

REINFORCING STEEL

448.9. General. Provisions are made herein for the welding of reinforcing steel by the manual shielded metal-arc process. Other processes may be permitted with the specific approval of the Engineer or may be specified on the plans. When the Cadwell process is permitted, a "C" series splice shall be used with grade 40 reinforcing steel, and a "T" series splice shall be used with grade 60 reinforcing steel, unless specified otherwise on the plans.

Splicing of reinforcing steel by welding shall be done only at locations shown on the plans.

448.10. Base Metal. Reinforcing steel to be welded shall be new billet steel conforming to ASTM Designation: A615, and shall also conform to the following chemical composition.

Maximum Carbon	0.40 Percent
Maximum Manganese	1.30 Percent

Mill test reports will be required in accordance with the Item, "Reinforcing Steel".

448.11. Filler Metal. Low hydrogen electrodes as specified in Table 1 will be required for all welding of reinforcing steel. Drying of electrodes shall be as specified in Article 448.3.

448.12. Preheat and Interpass Temperature. Minimum preheat and interpass temperatures shall be as shown in Table 4.

Carbon Range	No. 7 & Smaller	No. 8 & Larger
Up to and including 0.30	None	100
0.31 to 0.35 inclusive	None	150
0.36 to 0.40 inclusive	100	250
Unknown	250	400

TABLE 4

Preheat and Interpass Temperature
for Reinforcing Steel

For widening projects, use carbon content and bar size of new steel to determine preheat required.

448.13. Joint Types. For all bars No. 8 and larger, butt splices will be required. For No. 7 bars and smaller, lap splices will be required.

Fillet welds in lap splices shall be a minimum of 4 inches in length and shall be welded on each side of the lap joint. For bars No. 5 and smaller,

welding from one side of the lap will be permitted by the Engineer, when it is impractical to weld from both sides of the joint, but in this case the weld shall be a minimum of 6 inches in length.

Lap welds shall meet the requirements specified in Table 5.

Where possible, all butt splices shall be made in the flat position. All welds for butt splices, except horizontal welds on vertical bars shall be as shown in Figures 4 and 5. The back-up strip will be required when access to the splice is from the top only. When bars may be rotated or access to the splice is available from two sides the double bevel splice may be made and this type weld requires gouging out the root pass similar to a flange splice on structural steel. The root pass may be made using E7010 electrodes for all double beveled splices and the root pass shall be completely removed prior to welding the opposite side. The steel shall be preheated to 400 F if E7010 electrodes are used. Horizontal splices, on vertical bars, shall be as shown in Figure 6.

Bar Size	"a"	"b" (Max.)	"t" (Min.)	"c" (Max.)	Electrode Size
No. 4	.04 in.	1/8 in.	1/8 in.	1/16 in.	1/8 in.
No. 5	.05 in.	1/8 in.	3/16 in.	1/16 in.	5/32 in.
No. 6	.06 in.	1/8 in.	1/4 in.	1/16 in.	5/32 in.
No. 7	.07 in.	3/16 in.	5/16 in.	1/16 in.	5/32 in.

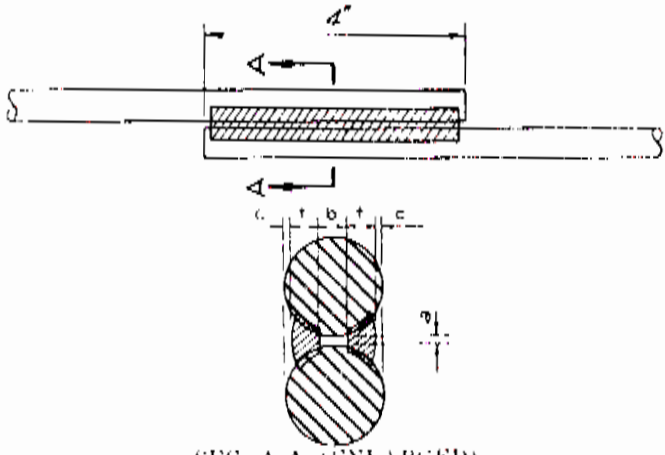

SEC. A-A (ENLARGED)

TABLE 5

Required Dimensions for Lap Splices

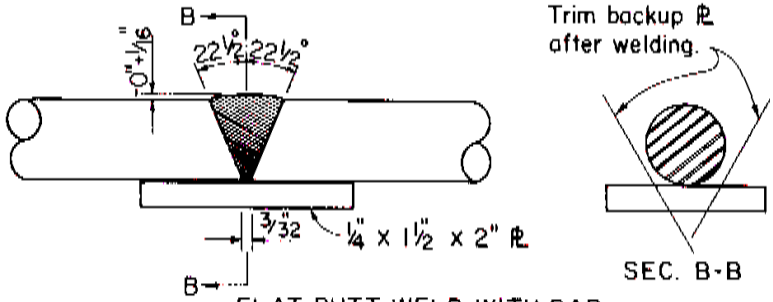

FLAT BUTT WELD WITH BAR
IN HORIZONTAL POSITION
FIGURE 4

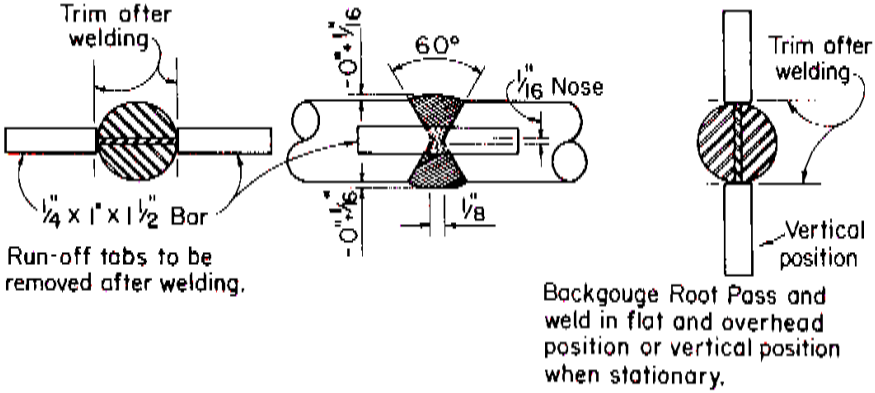

DOUBLE BEVELED BUTT WELD WITH BAR
IN HORIZONTAL POSITION
FIGURE 5

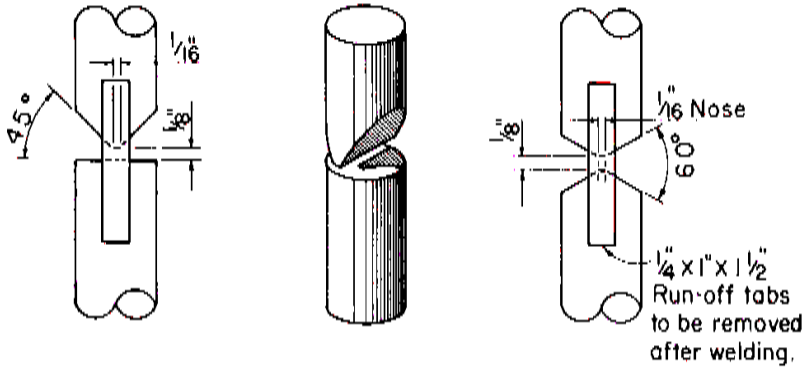

Note: Bars may be double beveled to form a 60° angle similar to the Double Beveled Butt Weld shown in Figure 5 for this vertical bar splice.

BUTT WELD WITH BAR IN VERTICAL POSITION
FIGURE 6

448.14. Widening Projects. In general, the new reinforcing steel shall be either lap or butt spliced directly to the bar to be extended. When the reinforcement in the old portion of a structure is found to be of the wrong spacing, dowel bars long enough to develop the welded lap or butt splice and also develop the bar in bond, as required in the Item, "Reinforcing Steel", shall be welded to the old steel, and the new reinforcement placed at the correct spacing without welding to the old steel. No measurement or payment will be made for the dowels but will be subsidiary to the other items in the contract.

Both old and new reinforcement shall be cleaned thoroughly prior to the preparation of the joint.

448.15. Radiographic Inspection. When so designated on the plans, welded butt splices shall be radiographed. Radiographic testing required in the field shall be done at the expense of the Contractor by an approved Laboratory, as defined by the Item, "Definition of Terms", having prior approval of the Materials and Tests Engineer. The testing shall include furnishing all materials, equipment, tools, labor and incidentals necessary to perform the required testing. The Department may require further tests as necessary in accordance with Article 5.9, and may perform additional testing, including other types. Weld quality shall be as follows: There shall be no cracks and the sum of the greatest dimensions of porosity and fusion-type defects shall not exceed one-tenth of the nominal bar diameter in inches.

The Engineer will examine and interpret the resulting radiographs, which shall become the property of the Department and remain with the Engineer.

STRUCTURAL AND REINFORCING STEEL

448.16. Welder Qualification. All welders shall be certified before working on any material which is to be incorporated into a Department project, except for miscellaneous welds as defined below. Each welder must have certification papers showing the type of work for which he is certified in accordance with SDHPT Bulletin C-6 and will not be permitted to do any type of work not covered by such papers.

Miscellaneous welds of the following types may be made by a welder who is certified for structural or reinforcing steel, or a qualified welder:

Armor joints and their supports, Screed Rail and Form Hanger Supports where permitted on Steel units, Reinforcing Steel to R-Bars for lateral stability between Prestressed Beams, Spirals or Bands to Reinforcing Bars in Drilled Shaft cages, Permanent Metal Deck forms, additional steel added in railing when slip form construction is used and other similar miscellaneous members that have no load carrying capacity in the completed structure.

A qualified welder is an experienced welder who is capable of making welds of sound quality, but does not have certification papers. Prior to welding operations, the Resident Engineer's personnel shall check the welder's ability by a job site Miscellaneous Weld Qualification Test. The Contractor shall furnish all of the material and equipment necessary for this test.

The Miscellaneous Weld Qualification Test shall consist of the following:

The welder shall make a single pass fillet weld in the vertical position 1/4 inch maximum size approximately 2 inches long on one-half inch plate using 5/32 inch low hydrogen electrodes in the position shown in Figure 7. The welder shall stop and start again within the 2" length of fillet weld.

The specimen shall be visually examined and the fillet weld shall present a reasonably uniform appearance free of cracks, overlap and undercut. (See Figure 2). There shall be no porosity visible on the surface of the weld.

The specimen shall be ruptured as shown in Figure 8 by the application of a force or by striking with a hammer.

The fractured surface of the weld shall show complete penetration into the root of the joint and shall exhibit no incomplete fusion to the base metal nor any inclusion or porosity larger than 3/32 inch in its greatest dimension.

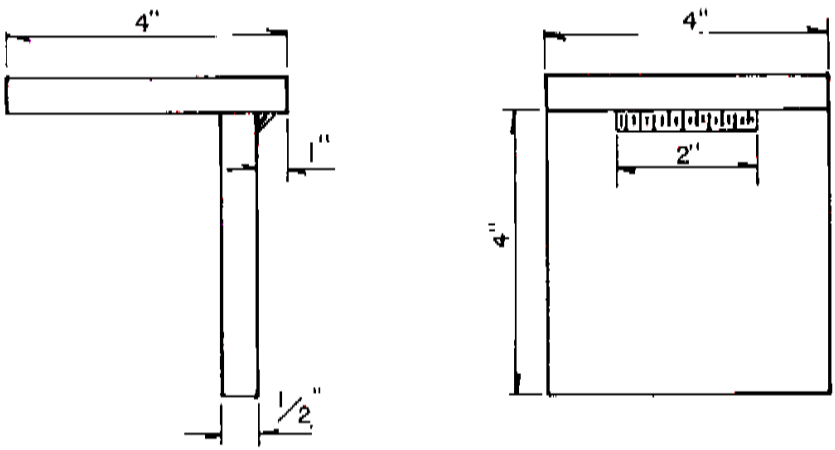

FIGURE 7

Fillet Weld-Break Specimen
Miscellaneous Qualification

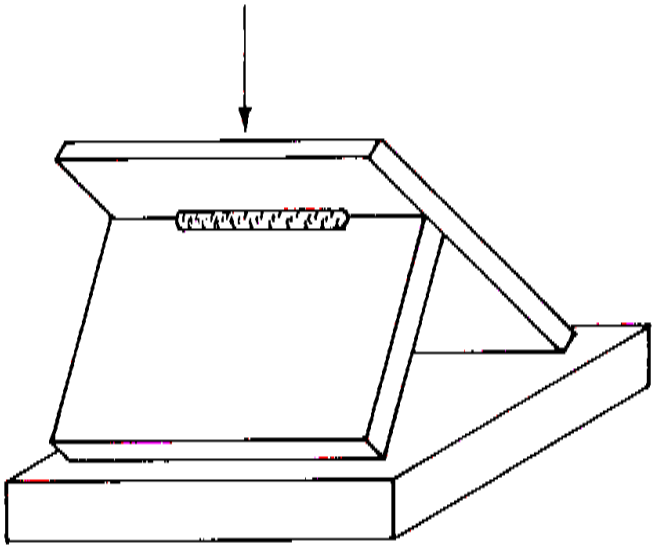

FIGURE 8

Method of Rupturing Specimen-Miscellaneous Qualification

If a welder fails to meet the requirements of this test, a retest may be allowed under the following conditions:

(1) An immediate retest may be made consisting of two test welds, as described above, and both test specimens shall meet all of the requirements specified.

(2) A retest may be made after thirty days, provided there is evidence that the welder has had further training or practice. In this case the test shall be a single specimen.

Qualification by the test herein specified for miscellaneous welding shall be effective immediately upon satisfactory completion thereof and shall remain in effect for the duration of the project.

Before welding on A514/A517 steel, each welder must present evidence, satisfactory to the Engineer, that he has had at least three months satisfactory experience welding this type of steel over one inch thick. In lieu of such experience, each welder, providing he has previously qualified for welding with low-hydrogen electrodes or has used the proposed welding process, shall have completed a training course in welding A514/A517 steel prior to taking the welder qualification test.

Tests for certification of welders for manual shielded metal-arc welding shall be as prescribed by SDHPT Bulletin C-6. Tests shall be given by an approved laboratory. For field welding, certification by an approved laboratory will be accepted for a period of one month from the time of cer-

tification. During this period, the welder will be permitted to work on Department projects provided his work is satisfactory. If his work is satisfactory during this period, the Department will issue him certification papers which will permit the welder to work on Department projects as long as he continues to do satisfactory work.

A welder must have passed the Basic Qualification Test for Structural Welding in the vertical (3G) and overhead position (4G) in accordance with SDHPT Bulletin C-6 prior to welding on any load carrying members. Also, he must demonstrate to a Department welding inspector a thorough knowledge of the required welding procedures together with his ability and desire to follow them and make welds of sound quality and good appearance. Quality of the welds will be checked by radiography.

To work on field splices of beams and girders, a welder must be certified for and be capable of making groove welds in both the vertical and overhead position when using the manual shielded metal-arc process.

For manual (semi-automatic) gas metal-arc welding or flux cored arc welding, welder qualification tests for certification shall qualify using an approved procedure in accordance with SDHPT Bulletin C-5 and tested in accordance with SDHPT Bulletin C-6 as follows:

(1) Basic Test-Certification for groove welds for unlimited thickness material will also qualify a welder for any equal or lower strength steel or for fillet welding in the position in which he is certified using the same electrode and combination of shielding used for the test.

(2) Welders shall be certified in the vertical and overhead position to work on field splices of beams or girders.

(3) Tests for certification shall be given by an approved laboratory. Certification papers for gas metal-arc welding or flux cored arc welding issued by an approved laboratory will be handled in a manner similar to that used for the manual shielded metal-arc process.

(4) Welders shall be qualified for each process to be used. Qualification for flux cored arc welding will not qualify a welder for gas metal-arc welding or vice versa.

(5) Qualification for welding with any grade electrode will automatically qualify a welder for the use of lower grades of electrodes using the same process, i.e., qualification with Grade ER80S/E80S electrode will qualify for Grade ER70S, but not vice versa.

The certification papers issued by the Department are the property of the Department and may be cancelled at any time.

Radiographic inspection shall be made of all qualification test plates of groove welds for the "Basic Qualification Test". If this inspection indicates any lack of fusion, incomplete penetration, and defects one-sixteenth of an inch or larger in greatest dimension, or if the sum of the greatest dimensions of defects less than one-sixteenth of an inch in greatest dimension exceeds three-eighths of an inch in any linear inch of weld, the weld shall be considered as failing the soundness test. This radiographic inspection shall apply only to that portion of the welds between the discard strips of the specimens as indicated in Figures 13 and 14 of Appendix B of SDHPT Bulletin C-6. The specimen plates shall be wide enough to provide a minimum of six inches of effective weld length for radiographic testing. Mechanical testing will be in accordance with SDHPT Bulletin C-6.

448.17. **Measurement and Payment.** No measurement or payment will be made under this item for the work prescribed but shall be considered subsidiary to the various other bid items called for in the contract.

ITEM 450

RAILING

450.1. **Description.** This item shall govern for the construction of concrete, steel, or aluminum railing, or a combination of these materials on bridges, culverts, walls, or incidental structures as shown on the plans.

In general, railing shall include that portion of the structure erected on and above the roadway or along the edges of walks, curbs, and/or slabs for the protection of traffic and pedestrians, and shall include any tie-in anchorage to approach railing or guard fence.

Railing, including the necessary anchorage, shall be in accordance with these specifications and the details shown on the plans.

450.2. **Materials.** All materials shall conform to the requirements of the Items, "Concrete for Structures", "Reinforcing Steel", and "Metal for Structures", as the case may be.

450.3. **Construction.**

(1) **General.** Railing shall be of the classification and type specified conforming with the requirements of this item and shall be constructed in accordance with details, alignment, and grade designated on the plans. Unless otherwise provided, railing shall not be placed until falsework, if any, for the span has been released. During construction, care shall be exercised to insure proper functioning of expansion joints.

Unless otherwise shown on the plans, railing shall be vertical.

If the plans include details of both steel and aluminum designs for the same type of railing, the Contractor has the option of furnishing either type. The option chosen (steel or aluminum) shall be furnished for all railing of that type in the entire contract.

(2) **Metal Rail.** Fabrication and erection of railing shall conform to the pertinent provisions of the Item, "Steel Structures", and to the requirements of this item.

Splicing of members will be permitted only as provided by the plans. All splice locations and details shall be shown on the shop or erection drawings.

For metal railings, shop or erection drawings shall be prepared and forwarded for approval in accordance with the requirements of the Item, "Steel Structures", and those shown in the plans on the pertinent rail details.

Shop welding shall be in accordance with the Item, "Steel Structures", and SDHPT Bulletin C-5. Field welding, when required, shall be in accordance with the Item, "Structural Welding".

Railing materials shall be stored above the ground on platforms, skids, or other supports and kept free from grease, dirt and contact with dissimilar metals. Care shall be taken at all times to avoid scratching, marring, denting, discoloring, or otherwise damaging the railing.

To facilitate bending or straightening, aluminum materials other than castings may be heated not to exceed 400 F for a period not exceeding 30 minutes.

Welding of aluminum materials shall be done by an inert gas shielded, electric arc welding process using no welding flux. Torch or flame cutting of aluminum will not be permitted.

Pipe rail and posts shop fabricated into panels shall be mounted in a jig clamped in their true relative position, accurately spaced with respect to each other and while assembled shall be completely welded or bolted, as the case may be. When required by the plans, as each rail section is completely assembled and connected, the adjacent section shall be set in its proper relative position with the ends engaged and remain in this position until completely connected. Each pair of sections shall be matchmarked so they may be erected in the same order in which they were fabricated.

The fabricated elements for deep beam railing shall conform to the dimensions and cross section shown on the plans. The rail shall be straight and free from warp. Maximum deviation from straightness of either edge of a full length section shall be one-half of an inch. Rail elements shall be jointed and connected to the rail posts as shown on the plans. Lapped elements shall have the lap in the direction of traffic in the adjacent lane.

Castings shall be true to pattern in form and dimensions and shall be of the materials specified on the plans and governing specifications.

Castings shall be permanent mold castings of uniform quality and condition, free from cracks and defects such as blow holes, porosity, hard spots or shrinkage effects which are extensive enough to materially affect their suitability for the intended use. The castings shall be free of all burrs, fins, discoloration and mold marks, and shall, when finished, have a smooth and uniform appearance and texture.

Castings shall be produced under radiographic control, consisting of a radiographic examination of them, until proper foundry technique is established for each mold to produce a product free from harmful internal defects. Radiographic examination of production castings will be made as necessary to insure maintenance of satisfactory quality.

When required, the castings shall be heat-treated to produce material with the properties specified. The whole casting shall be heat-treated, not a portion only.

All castings shall be permanently marked on the web or top of base with the lot number and with heat treat lot identification. Such markings shall be sufficient to correlate the castings with the mill test reports.

Mill test reports shall be furnished showing the chemical composition, tensile strength, elongation and number of pieces for each casting lot.

To provide more uniform materials and to reduce the number of samples required to establish material compliance, the entire number of acceptable posts cast from each lot shall be furnished to the project, except where a portion of a lot is required to complete the shipment. The mill test report shall indicate the number of posts represented by each lot and furnished to the project.

For aluminum, a lot of castings shall consist of not more than 1,000 pounds of trimmed castings when produced from batch type furnaces, or 2,000 pounds when produced from a continuous furnace during a period not exceeding 8 consecutive hours.

Minor defects in aluminum castings may be repaired by an approved inert gas welding process.

(3) **Concrete Railing.** The concrete portions of railing shall conform to provisions of the Item, "Concrete Structures", and to the requirements of this item. Provisions shall be made in constructing forms to provide for checking and correction of railing lines and grades after concrete has been placed but before initial set, and the finish floating of the railing tops shall not disturb the form alignment after the final check. Particular care shall be exercised in other construction operations to avoid disturbing or vibrating

the span with the newly placed railing. For precast members, care shall be taken to preserve true and even edges and corners.

Reinforcing steel for railing shall conform to the pertinent provisions of the Item, "Reinforcing Steel".

Concrete railing may be constructed with slip-forms with equipment approved by the Engineer. Sensor control for both line and grade must be provided. Whether slip-formed, cast-in-place or precast, the concrete may be cured wth membrane curing compound.

450.4. Tests. One post from each cast aluminum post lot shall be selected by the Engineer for test purposes and shall meet the requirements of the Item, "Metal for Structures".

For deep beam rail elements, a sample of the rail may be taken from each project or from each shipment to a project. Samples of bolts and nuts may also be required. Tests shall be in accordance with AASHTO M-180.

450.5. Protective Coating. Unless otherwise noted on the plans, all portions of steel railing shall be galvanized. When painting is specified on the plans, the type and coating thickness shall be in accordance with the paint system shown on the Specification Data Sheet and conforming with the Item, "Cleaning, Paint and Painting".

Galvanized railing shall be hot dip galvanized after fabrication in accordance with ASTM Designation: A123 and A153, except that, unless otherwise specified on the plans, any deep beam rail element may be galvanized before fabrication in accordance with ASTM Designation A525. The weight of galvanized coating on deep beam rail element shall not be less than 1.80 ounces per square foot of double exposed surface (single spot test).

Aluminum railing and galvanized steel railing shall not require field painting. Prior to final acceptance, extrusion marks, grease, and dirt shall be cleaned from the railing.

After erection, any damaged galvanizing on steel posts and rail elements shall be thoroughly cleaned and painted with two coats of zinc dust-zinc oxide paint conforming to the requirements of Federal Specification TT-P-641b or repaired by the application of repair compounds meeting Federal Specification O-G-93 (Stick only) in accordance with the manufacturer's recommendations.

Where fabrication is done after galvanizing, and when specifically required by the plans, the cut edges and bolt holes shall be cleaned by brushing and the cleaned area shall be treated as specified above.

450.6. Measurement. Railing of the classification and type designated will be measured by the linear foot in accordance with the dimensions and details as shown on the plans. For this item adequate calculations have

been made in accordance with Article 9.1. If no adjustment is required by Article 450.7., additional measurements or calculations will not be required.

450.7. Payment. The quantity to be paid for will be that quantity shown on the contract plans and in the proposal, except as may be modified by the following:

Either party to the contract may request an adjustment of the quantities shown on the contract plans (by each separate structure), if the quantities, measured as outlined in Article 450.6., vary from those shown on the contract plans by more than 5 percent. Adjustments of quantities will not be subject to the provisions of Article 4.5.

The party to the contract which requests an adjustment shall present to the other, three copies of field measurements and calculations showing the revised lengths for the structure or structures in question. These revised lengths of railing, when proven correct, together with all other railing under the same bid item, shall constitute the final quantity for which payment will be made.

Payment for revised quantities due to a change in design will be paid for at the unit price bid per linear foot measured as provided in Article 450.6. Adjustments of quantities will be subject to the provisions of Article 4.5.

This price shall be full compensation for furnishing, preparing and placing of all concrete, expansion joint material, reinforcing steel, structural steel, aluminum, cast steel, pipe, anchor bolts, anchorage devices for attaching Metal Beam Guard Fence, and all other materials required in the finished railing, and for all labor, tools, hardware, equipment, paint and painting, galvanizing and incidentals necessary to complete the work in the manner and in accordance with the details specified in the contract.

ITEM 451

REMOVING AND REPLACING RAILING

451.1. Description. This item shall govern for the removal of existing railing, modified as indicated on the plans, and replacing it on finished bridges at locations indicated on the plans in accordance with these specifications and the details shown on the the plans.

451.2. Construction Methods. Existing railing shall be removed in such a manner that it will not be damaged and shall be placed carefully on adequate blocking in a storage area approved by the Engineer so that it will not interfere with traffic or construction. Any of the materials of the railing that are lost, damaged beyond repair, or broken by the Contractor shall be replaced at his expense.

Railing shall be replaced as shown on the plans, and as directed by the Engineer. New anchor bolts and washers, repairing, etc., shall be provided where necessary to place the railing in the new position.

After erection, painted steel railing shall be cleaned thoroughly of loose scale, rust, dirt and other foreign matter, spot painted, and repainted as specified on the plans and in accordance with the Item "Cleaning, Paint and Painting".

Galvanized steel railing shall be cleaned thoroughly to an acceptably uniform color. Galvanizing damaged in removal or replacement or galvanizing which has been damaged previously shall be cleaned thoroughly of rust or other foreign matter and the cleaned area shall be painted with two coats of zinc dust-zinc oxide paint conforming to the requirements of Federal Specification TT-P-641b, or shall be repaired by application of galvanizing repair compounds meeting Federal Specification O-G-93 (Stick only) in accordance with the manufacturer's recommendations.

When designated on the plans, galvanized railing shall be cleaned, a wash primer applied to a dry film thickness of 2 to 5 mils, and painted in accordance with the Item, "Cleaning, Paint and Painting". The wash primer shall comply with Federal Specification MIL-C-14504.

Aluminum railing shall be cleaned to a uniform color, but will not require painting.

451.3. Measurement. Removing and replacing railing will be measured by the linear foot of railing, complete in place. Measurement will be made upon the face of the rail in place in accordance with dimensions as shown on the plans.

451.4. Payment. The work performed as prescribed by this item, measured as provided above, will be paid for at the unit price bid for "Removing and Replacing Railing", of the type specified, which price shall be full compensation for salvaging the existing railing and rebuilding it complete in place as shown on the plans, for furnishing all additional materials, paint and painting, and for all labor, tools, hardware, equipment, and incidentals necessary to complete the work.

ITEM 452

REMOVING RAILING

452.1. Description. This item shall govern for the removal and disposal of railing which is not to be reused on the structure, but is to be completely replaced with other railing. The removal may be on one side only, or on both sides of the structure. All railing considered salvable shall become the pro-

perty of the Department and shall be stockpiled as directed by the Engineer.

452.2. **Construction Methods.** The existing railing shall be removed to the lines and grades as shown on the plans by the use of air driven equipment or other suitable means. The use of explosives will not be permitted. Care shall be taken to avoid damage to that portion of the concrete that is to remain in place. Any concrete removed beyond the neat lines, or lines established by the Engineer, shall be replaced at the Contractor's expense.

Existing reinforcing steel in concrete posts, not to be used as dowels, shall be cut off a minimum of 1 inch below the surface of the concrete. The concrete removed in making the cut-off shall be replaced in a manner satisfactory to the Engineer.

The top of the concrete where railing is removed shall be refinished in such a manner as to leave a neat surface.

Old concrete which is removed shall be loaded, hauled, and neatly stored at pre-designated sites, or otherwise disposed of as directed by the Engineer.

Work performed under this specification shall be performed at such time, and prosecuted in such manner that will cause a minimum of inconvenience to traffic.

452.3. **Measurement.** Existing railing removed as prescribed above will be measured by the linear foot in its original position.

Railing to be removed on the side of the structures to be widened will not be measured under this item, but will be measured under the Item, "Extending Concrete Structures".

452.4. **Payment.** The work performed as prescribed by this item and measured as provided under "Measurement" above, will be paid for at the contract unit price bid for "Removing Railing", of the type specified, which price shall be full compensation for removing all materials, loading, hauling, unloading and satisfactorily disposing of the material, for cutting back old post reinforcing bars, for refinishing the top and roadway face of the old curb and for all labor, tools, equipment, manipulations and incidentals necessary to complete the work.

ITEM 453

TEMPORARY RAILING

453.1. **Description.** This item shall govern for the installation of temporary railing, at the locations shown on the plans, in conformity with plan details and the requirements of this item.

453.2. Material. Temporary railing shall be constructed of materials and to details specified on the plans.

Steel shapes, plates and deep-beam members shall be in satisfactory condition for the use intended. Portions of permanent railing to be used later on the permanent structures may be used subject to the requirements of this item.

Paint for portions of the temporary railing which are to be later used in the permanent railing shall conform to the Item, "Cleaning, Paint and Painting".

When a portion of the temporary railing is to be furnished by the Department, such portions to be furnished will be shown on the plans.

453.3. Construction. The temporary railing shall be erected on that side of the existing structure where widening operations are to begin prior to the removal of the existing railing, curb and portion of the slab. The rail and posts shall be constructed in accordance with the details shown on the plans.

After erection, all parts not galvanized shall be thoroughly cleaned and painted. Portions of the railing which are to become a part of the permanent rail shall receive paint in accordance with the paint system shown in the plans for the permanent rail. Other portions of the rail shall be painted with one coat of commercial grade aluminum paint unless otherwise specified on the plans.

After completion of the widening on one side of bridges to be widened on both sides, the temporary railing shall be moved to the other side and erected, prior to the removal of the existing railing and curb.

Any railing material furnished by the State will be delivered free of charge to the bridge site or stored at a site designated on the plans.

The Contractor shall maintain the temporary railing in a first class condition until all work on the structure has been completed.

All holes drilled through or into existing concrete for erection of temporary railing shall be filled with mortar and finished in an acceptable manner.

Upon removal of the railing, materials furnished by the State shall be stored near the bridge site as directed by the Engineer for subsequent removal by State Forces.

Prior to installation on the structure, the portion of permanent railing which was used as temporary railing, shall be reworked, if necessary, to provide railing for the new structure as intended by the plans and specifications. Portions damaged beyond repair shall be replaced at the Contractor's expense.

453.4. Measurement. Temporary railing, constructed complete in place, moved as required by the plans, maintained and finally removed will be measured as one lump sum for all railing furnished under this item.

453.5. Payment. The work performed as prescribed by this Item measured as provided above, will be paid for at the lump sum contract price bid for "Temporary Railing", which price shall be full compensation for furnishing all materials except those designated on the plans to be furnished by others, for all preparation, hauling and erection, painting, maintaining, moving the railing as required, for removing the railing, stockpiling the rail material on the right-of-way when required, and for all labor, tools, equipment, and incidentals necessary to complete the work.

ITEM 458

WATERPROOFING

458.1. Description. This item shall govern for the furnishing and placing of waterproofing on abutments, retaining walls, backwalls, and substructure footings in accordance with the plans and these specifications.

Type 1 waterproofing shall consist of a butyl rubber membrane applied to a surface with a proper adhesive, without protective planking, and in accordance with the details shown on the plans. Unless otherwise specified, the thickness shall be one-sixteenth of an inch.

Type 2 waterproofing shall consist of one asphaltic primer coat and one mopping of asphalt.

Type 3 waterproofing shall consist of one asphaltic primer coat and two moppings of asphalt. At construction joints of foundation structures when so indicated on the plans, the primer and two moppings of asphalt shall be supplemented by two layers of treated cotton fabric 15 inches wide with a third mopping of asphalt placed over the outer layer of fabric.

Type 4 waterproofing shall consist of a self-adhering polyethylene with a rubberized asphalt mastic material.

Type 5 waterproofing shall consist of a single component, coal tar modified, urethane coating.

When Type 10 waterproofing is shown on the plans, the Contractor may furnish either Type 1, Type 4, or Type 5.

458.2. Materials.

(1) General. Except as otherwise provided, materials shall be sampled and tested for the specified properties by the current method recommended by the American Society for Testing Materials.

The acceptance of any materials by the Engineer shall not prevent their subsequent rejection if found defective. Any material not meeting the specification requirements shall immediately be removed from the work at the Contractor's expense.

All materials to be furnished by the Contractor shall be delivered on the work site not less than 3 weeks before they are to be applied, so they may be tested and analyzed. No materials shall be used until they have been accepted by the Engineer.

(2) **Asphalt for Mopping Above Ground.** Asphalt for mopping above ground shall be homogeneous, free from water, and shall meet the following requirements:

Softening point (ring and ball Method)--145 to 170 F.

Penetration: at 115 F, 50 g, 5 sec—not more than 110.

at 77 F, 100 g, 5 sec--25 to 40.
at 32 F, 200 g, 60 sec—not less than 10.

Flash point (open cup) –not less than 400 F.

Loss on heating at 325 F, 50 g, 5 hr—not more than 0.5 percent.

Penetration at 77 F, 100 g, 5 sec of residue after heating at 325 F , as compared with penetration of asphalt before heating--not less than 80 percent.

Ductility: at 77 F elongated at rate of 5 cm per min not less than 10 cm.

Solubility in trichlorethylene—min 99 percent.

(3) **Asphalt for Mopping Below Ground.** Asphalt for mopping below ground shall be homogenous, free from water, and shall have the following properties:

Penetration at 77 F, 100 gr, 5 sec	80 to 100
Softening point (ring and ball Method)	110 to 125 F
Ductility of pure bitumen at 77 F elongated at rate of 5 cm per min	Min 70 cm
Flash point	Min 450 F
Loss on heating at 325 F, 50 gr, 5 hr	Max 1.0%
Penetration at 77 F, 100 gr, 5 sec of residue after heating at 325 F as compared with penetration of asphalt before heating	Min 50%
Pure bitumen soluble in trichlorethylene	Min 99.0%

(4) **Asphaltic Primer.** Asphaltic primer shall be free from water and shall meet the following requirements:

Furol viscosity at 77 F, seconds, - 25 to 75
Distillate, as volume percent of the primer:
Off at 437 F . . . . . not less than 35
Off at 680 F . . . . . not more than 65
680 F distillate residue
Penetration at 77 F, 100 g, 5 seconds - 20 to 50
Solubility in trichlorethylene, % minimum - 99

(5) **Plastic Cement.** Plastic cement shall be composed of semi-solid asphalt dissolved in a suitable volatile solvent and stiffened with mineral stabilizers and fillers.

The asphalt forming the base of plastic cement shall be a petroleum asphalt, the pure bitumen of which shall meet the following minimum requirements:

Penetration at 77 F, 100 gr, 5 sec	30—100
Ductility at 77 F, 5 cm per min, cm, min	100 cm

It shall be free from water, oxidized petroleum, residuals from the cracking process, sludge asphalt, tar or pitch products, or derivatives thereof.

Plastic cement shall meet the following requirements:

	Percent By Weight
Water, not more than	0.5%
Petroleum asphalt, not less than	30.0%
Mineral stabilizers and fillers, not less than	15.0%
Petroleum Solvent, not more than	30.0%

The consistency of plastic cement shall permit ready spreading with a trowel without drawing or pulling, or extrusion through a suitable nozzle under a pressure of 50 lbs or more per square inch.

When applied in a layer one-sixteenth to one-eighth of an inch thick, plastic cement shall set within 24 hours to a tough, plastic coat, free from blisters.

After drying for 72 hours a patch of plastic cement one-sixteenth to one-eighth of an inch thick, applied to the material it is to be used upon, shall not blister or sag more than one-fourth inch upon exposure at a temperature of 140 F for 5 hours.

After drying for 72 hours and exposure at a temperature of 140 F for 5

hours, a patch of the cement one-sixteenth to one-eighth of an inch thick shall be plastic and adhere well to metal or concrete upon exposure at a temperature of 32 F for one hour.

After drying for 24 hours and exposure at a temperature of 140 F for 24 hours and then cooling to a temperature of 70 to 77 F, a patch of the cement one-sixteenth to one-eighth of an inch thick shall not crack or break from the metal, when bent over a mandrel one inch in diameter.

(6) Butyl Rubber Membrane.

(a) Membrane. Butyl rubber membrane shall be furnished in rolls of sufficient length and width to cover the area shown on the plans with a minimum of splices and shall conform to the following requirements:

Thickness-nominal	1/16", unless otherwise noted on plans	
Color	Black	
Specific gravity	1.20±0.03	ASTM D 297
Tensile Strength	1200 psi (min)	ASTM D 412
Modulus at 300% elongation	600 psi (min)	ASTM D 412
Elongation	300% (min)	ASTM D 412
Tear resistance, die B	150 lbs. per in. (min)	ASTM D 624
Hardness, shore A	55± 5 with 5-sec interval before reading	ASTM D 2240
Ozone resistance, 70 hr at 100 F in 50 PPHM Ozone; 20% elongation	no cracks*	ASTM D 1149
Heat aging, 7 days at 240 F	70% of original properties	
Maximum vol. swell (Tricresyl Phosphate Immersion) 72 hr at 212 F	10%	ASTM D 571
Operating temperature range	-40 F to 275 F	
Water absorption, vol. change	less than 1%	

*Manufacturer certification of conformance to ozone resistance is required.

(b) **Adhesive.** Adhesive for butyl rubber shall be as recommended by the manufacturer of the butyl rubber membrane. It shall remain elastic at temperatures above minus 40 F and shall be compatible with the materials to which it is bonded.

(c) **Splicing Cement.** Cement for splicing shall be a butyl compound as recommended by the manufacturer of the butyl rubber membrane. It shall be of self-vulcanizing butyl rubber conforming to the following requirements:

Viscosity, No. 3 Zahn Cup (77 F)	100 to 150 seconds
Total Solids	30%

Coverage of cement application (Min) shall be 50 sq ft per gallon.

(d) **Butyl Gum Tape.** Butyl gum tape for splicing butyl membrane shall be black, unvulcanized butyl rubber with an 8-mil polyethylene film backing. The tape shall be 30 mils (± 4) thick, including the backing.

(7) **Treated Cotton Fabric.**

(a) **Fabric.** Fabric shall consist of high-grade cotton cloth saturated thoroughly and uniformly with asphalt complying with one of the types specified in ASTM D449, Asphalt Used in Damp Proofing and Waterproofing. In the process of manufacture, the dry cotton fabric shall be thoroughly and uniformly saturated with bitumen at a temperature and speed that will not injure the fabric. This shall be accomplished by passing the fabric through the saturant or by spraying with saturant, calendering in the presence of heat, and then cooling before winding on a core.

The roll shall be capable of being unrolled easily at ambient temperatures above 50 F without sticking together in such a manner as to injure the fabric.

(b) **Treated Fabric.** Treated cotton fabric shall meet the following requirements:

Width of roll: Min 30 in; Max 38 in.

Gross weight of roll: Min 35 lbs; Max 80 lbs.

Average weight per square yard: Not less than 10 ounces.

Moisture content: Not more than four percent of net weight.

Tensile strength at 70 F in either direction (grab method): No less than 50 lbs per linear inch.

Elongation without fracture: When measured by rule or scale, not

less than 10 percent; when measured by autographic recording device, not less than 8 percent.

Pliability at 32 F: Shall not crack when bent over a 1/16 inch mandrel through an arc of 180 degrees in one direction and then through 360 degrees over the same mandrel in the opposite direction.

Average loss on heating asphalt treated fabric (exclusive of moisture): Not more than 4 percent.

Weight of saturant in a square yard of treated fabric: Not less than one and six tenths times the weight of a square yard of untreated moisture-free fabric.

(8) **Self-adhering Polyethylene.** The self-adhering polyethylene shall consist of a minimum 4 mil thickness of polyethylene coated on one side with a layer of adhesive rubberized asphalt and a protective membrane for the adhesive surface until ready for use. Polyethylene rubberized asphalt shall have a tensile strength of 300 psi when tested in accordance with ASTM D146, Section 12.1, Felts, and will be furnished in rolls of sufficient width and length to satisfy job requirements. Material shall be black in color and shall have a net thickness not less than 60 mils excluding the protective release paper membrane.

(9) **Coal Tar Modified Urethane Coating.** This material shall be designed so that it will cure to form a tough, flexible coating without addition of a catalyst. The material shall not evidence any lumping or skinning or any separation of pigments or fillers which cannot be easily redispersed by stirring. When tested in accordance with Test Method Tex-615-J. The coating shall evidence the following properties:

Viscosity at 77 F, Poises, maximum 500
Peel Strength, lbs/inch, minimum 20
Wet Strength, psi, minimum 150
Resistance to flow on vertical
Surface–no flow or sag of 30 mil thickness. Adhesion between coats: must not evidence tendency to separate.

458.3. Construction Methods.

(1) **General.** Waterproofing material shall be stored in a manner to preclude damage. The material shall be kept dry at all times and shall be stored in a warm area prior to use in cold weather and out of direct sunlight in hot weather.

Unformed surfaces to be waterproofed shall have a wood float finish. All concrete surfaces to be waterproofed shall cure for not less than seven days

before waterproofing application.

Concrete surfaces to be waterproofed shall be clean, dry, smooth and free of fins, sharp edges and loose material. Grinders shall be used, if necessary, to remove protrusions that would puncture the waterproofing membrane. There shall be no depressions or pockets in horizontal surfaces of finished waterproofing.

The area to be waterproofed shall be thoroughly cleaned of all dust and loose material just prior to application of the waterproofing. Once applied, the waterproofing shall be protected against damage from any source.

(2) **Type 1.** Type 1 waterproofing shall not be applied in wet weather, or when the ambient temperature is below 50 F, without written permission of the Engineer. The rubber membrane shall be free from punctures, pockets or folds.

The membrane shall be turned into drainage holes and castings without break. Special care shall be taken to make the waterproofing effective along the sides and ends of members to be waterproofed.

Expansion joints and other grooves shall be filled with plastic cement conforming to these specifications. Joints shall be dried and cleaned immediately before they are filled. They shall be overfilled slightly to allow for shrinkage in drying.

The butyl membrane shall be installed by first applying the adhesive as recommended by the butyl rubber membrane manufacturer to the surface to be waterproofed and at necessary splices in a solid area extending from the edges back about 36 inches. Apply the butyl rubber membrane. Press the membrane firmly and uniformly in place against the previously applied adhesive. Avoid wrinkles and buckles. All splices, laps and flashing shall be made in accordance with the butyl rubber manufacturer's recommended procedures.

Where waterproofing is required by the plans as a protection for back of abutments, retaining walls or footings, "Below Ground" moppings of asphalt as provided herein shall be used.

(3) **Type 2.** When Type 2 waterproofing is specified, the asphalt primer shall be in place at least 24 hours and shall be dry prior to the asphalt mopping. The primer shall be well worked in to give a uniform coating. The asphalt for mopping shall be heated in kettles equipped with armored thermometers to permit uniform covering, but shall not be heated above 350 F. While being heated the asphalt shall be stirred frequently. The mop coating shall require not less than 4 gallons per 100 square feet of surface. If imperfections appear in the coating additional coatings shall be applied until the imperfections are corrected.

(4) **Type 3.** When Type 3 waterproofing is specified, the asphalt primer shall be in place at least 24 hours and shall be dry prior to the first asphalt mopping. The primer shall be well worked in to give a uniform coating. The asphalt for mopping shall be heated in kettles equipped with armored thermometers to permit uniform covering, but shall not be heated above 350 F. While being heated the asphalt shall be stirred frequently. Minimum coverage for each mop coating shall be 4 gallons per 100 square feet of surface. If imperfections appear in the coating, additional coatings shall be applied until the imperfections are corrected.

At construction joints, the surfaces to be waterproofed shall be mopped in sections. While the first mopping of asphalt is still hot, a strip of cotton fabric shall be laid on the mopping and pressed into place. Each mopping thereafter shall be so applied that it will completely cover and seal the cotton fabric. End laps of the cotton fabric shall be not less than 12 inches.

(5) **Type 4.** Type 4 waterproofing shall be applied in the following manner:

> Unwrap the roll and press the adhesive surface into contact with the concrete, horizontally, secure the free end, then unroll slowly, using hand pressure to smooth the membrane in place and help make a tight bond with the concrete. Adjacent strips shall be overlapped a minimum of 1 inch over the previously laid strip. Backfilling may be started as soon as the initial horizontal strip has been applied.

(6) **Type 5.** Type 5 waterproofing shall be applied in two coats to produce a minimum cured film thickness of 60 mils. Unless otherwise specified on the plans, the application may be made using a roller, squeegee, brush or spray equipment. Application of the second coat shall be made in not less than 16 hours after the initial coat. The manufacturer's instructions shall be followed with regard to the maximum time allowed between coats and any treatment of the initial coat required if this maximum time should be exceeded. Ambient temperature at time of application of the waterproofing shall be not less than 40 F.

Backfilling shall not commence until the second coat has cured sufficiently that it will not be damaged by the backfilling operation.

458.4. Measurement. When shown in the plans and proposal as a bid item, measurement of waterproofing of the type specified on the plans will be made by the square yard of the waterproofing, complete in place.

When not included in the plans as a bid item waterproofing will not be measured but will be subsidiary to the Item, "Retaining Walls".

458.5. Payment. Payment for waterproofing will be made at the contract unit price bid per square yard for "Waterproofing" of the type

specified on the plans measured as prescribed above. Such payment shall be full compensation for furnishing all materials, equipment, tools, labor and incidentals necessary to complete the work.

ITEM 459

RAILROAD WATERPROOFING

459.1. This item shall govern for the furnishing and placing of Type RR-1, Type RR-2 and Type RR-3 waterproofing on concrete and steel bridge decks of railroad structures in accordance with the plans and these specifications.

(1) **Type RR-1.** This type of waterproofing shall consist of a butyl rubber membrane with a protective course of asphalt plank or asphalt mat of the specified thickness.

(2) **Type RR-2.** This type of waterproofing shall consist of a rubberized asphalt and plastic-film membrane protected by two layers of three-eighths inch thick asphaltic panels.

(3) **Type RR-3.** When Type RR-3 waterproofing is specified on the plans, the Contractor may furnish either Type RR-1 or Type RR-2.

459.2. **Materials.**

(1) **General.** Except as otherwise provided, materials shall be sampled and tested for the specified properties by the current method recommended by the American Society for Testing Materials.

The acceptance of any materials by the Engineer shall not prevent their subsequent rejection if found defective. Any material not meeting the specification requirements shall immediately be removed from the work at the Contractor's expense.

All materials to be furnished by the Contractor shall be delivered on the work not less than 3 weeks before they are to be applied, so they may be tested and analyzed. No materials shall be used until they have been accepted by the Engineer.

(2) **Asphalt for Mopping Above Ground.** Asphalt for mopping above ground shall be homogeneous and free from water. It shall be the product obtained by the distillation of crude asphaltic base petroleum with steam agitation, supplemented if necessary with oxidation by air, but without the addition, during any stage of the process of manufacture, of any fluxing material other than a native asphalt or a straight steam refined asphaltic residual. It shall meet the following requirements:

Softening point (ring and ball Method)—145 to 170 F.
Penetration: at 115 F, 50 g, 5 sec—not more than 110.
at 77 F, 100 g, 5 sec—25 to 40.
at 32 F, 200 g, 60 sec—not less than 10.
Flash point (open cup)—not less than 400 F.
Loss on heating at 325 F, 50 g, 5 hr—not more than 0.5 percent.
Penetration at 77 F, 100 g, 5 sec of residue after heating at 325 F, as compared with penetration of asphalt before heating—not less than 80 percent.
Ductility: at 77 F elongated at rate of 5 cm per min not less than 10 cm.
Solubility in trichlorethylene—min 99 percent.

(3) **Plastic Cement.** Plastic cement shall be composed of semi-solid asphalt dissolved in a suitable volatile solvent and stiffened with a mineral filler consisting essentially of short fiber asbestos or other inert material.

The asphalt forming the base of plastic cement shall be a petroleum asphalt, the pure bitumen of which shall meet the following minimum requirements:

Penetration at 77 F, 100 gr, 5 sec	30
Ductility at 77 F, 5 cm per min	100 cm

It shall be free from water, oxidized petroleum, residuals from the cracking process, sludge asphalt, tar or pitch products, or derivatives thereof.

Plastic cement shall meet the following requirements:

	By Weight
Petroleum asphalt, not less than	38%
Short Fiber Asbestos, not less than	25%
Petroleum Solvent, not more than	25%

The consistency of plastic cement shall permit ready spreading with a trowel without drawing or pulling, or extrusion through a suitable nozzle under a pressure of 50 lbs or more per square inch.

When applied in a layer one-sixteenth to one-eighth of an inch thick, plastic cement shall set within 24 hours to a tough, plastic coat, free from blisters.

After drying for 72 hours a patch of plastic cement one-sixteenth to one-eighth of an inch thick, applied to the material it is to be used upon, shall not blister or sag more than one-fourth inch upon exposure at a temperature of 140 F for 5 hours.

After drying for 72 hours and exposure at a temperature of 140 F for 5 hours, a patch of the cement one-sixteenth to one-eighth of an inch thick

shall be plastic and adhere well to metal or concrete upon exposure at a temperature of 32 F for one hour.

After drying for 24 hours and exposure at a temperature of 140 F for 24 hours and then cooling to a temperature of 70 to 77 F, a patch of the cement one-sixteenth to one-eighth of an inch thick shall not crack or break from the metal, when bent over a mandrel one inch in diameter.

(4) **Mineral Filler.** Mineral filler shall be finely ground limestone or silica meeting the following requirements:

Passing a 200 mesh sieve	Not less than 75 percent
Passing a 30 mesh sieve	Not less than 100 percent

(5) **Butyl Rubber Membrane.** Butyl rubber membrane shall be furnished in rolls of sufficient length and width to cover the area shown on the plans with a minimum of splices and shall conform to the following requirements:

(a) Butyl rubber membrane shall be 1/16 inch thick unless otherwise specified on the plans.

(b) Rubber membrane shall be a compound butyl elastomer of the IIR Family (Iso butylene-Iso prene rubber) conforming to the following requirements:

Color	Black	
Specific gravity	1.20±0.03	ASTM D 297
Tensile strength	1200 psi (min)	ASTM D 412
Modulus @ 300% elongation	600 psi (min)	ASTM D 412
Elongation	300% (min)	ASTM D 412
Tear resistance, die B	150 psi (min)	ASTM D 624
Hardness, Shore A	55±5 with 5-sec interval before reading	ASTM D 2240
Ozone resistance, 70 hr @ 100 F in 50 PPHM Ozone; 20% elongation	no cracks*	ASTM 1149
Heat aging, 7 days @ 240 F	70% of original properties	
Maximum vol. swell (Tricresyl Phosphate Immersion) 72 hr@ 212 F	10%	ASTM D 571
Operating temperature range	—40 F to 275 F	
Water absorption, vol. change	less than 1%	

*Manufacturer certification of conformance to ozone resistance is required.

(c) **Adhesive.** Adhesive for securing butyl rubber membrane and the protective cover shall be as recommended by the manufacturer of the butyl rubber membrane. It shall be compatible to the membrane waterproofing and with the materials to which it is bonded. It shall remain workable to its brittle point (-40 F).

(d) **Cement.** Cement for splicing rubber membrane shall be a self-vulcanizing butyl rubber compound conforming to the following requirements:

Viscosity No. 3 Zahn Cup (77 F) . . . . . 100 to 150 sec
Total Solids . . . . . 30% (min)

Cement shall be applied at a minimum rate of 2 gal. per 100 sq. ft.

(e) **Butyl Gum Tape.** Butyl gum tape for splicing butyl membrane shall be black, unvulcanized butyl rubber with an 8-mil polyethylene film backing. The tape shall be 30 mils (± 4) thick, including the backing.

(6) **Asphalt Plank.** Asphalt plank shall be a mixture of asphalt, mineral matter and organic fiber, but not wood fiber, and shall meet all requirements of ASTM Designation: D 517 for plain asphalt plank.

The plank shall be of uniform width and thickness with sides straight and all edges square.

The standard width and length of plank for the thickness specified shall normally be as follows:

Thickness	Width	Length
½ inch	12 inches	48 inches
1 inch	8 inches	72 inches
1 inch	10 inches	60 inches

Shorter lengths for one inch thickness may be acceptable provided no length shipped is less than 36 inches.

Shipments of asphalt plank shall be loaded so that deformation caused by irregular supports is avoided and blocking shall be used if necessary to prevent shifting while in transit.

Finished thickness of asphalt plank shall not be less than one inch when used as protective course.

(7) **Asphalt Mat.** Asphalt mat shall consist of a core of blended airblown asphalt, organic fibers and mineral fillers, a covering of asphalt-saturated felts and an exterior coating of weather resistant oxidized asphalt. The mats shall be furnished in widths of 4 feet and not less than 8 feet long except for end pieces cut to length required. They shall be uniform in thickness and free from imperfections which may affect serviceability. The mat surfaces shall be dusted with mica, talc or similar materials to prevent sticking or damage to them during shipment or handling. The thickness of the mats shall be one half of an inch or one inch.

Finished thickness of asphalt mat shall not be less than one inch when used as protective course.

(8) **Cold Asphalt-Base Emulsion.** Cold asphalt-base emulsion shall consist of a nonvolatile organic base asphalt mixed with mineral fillers, asbestos fiber or other suitable materials, to form a quick setting mastic material capable of being applied and bonded to asphalt plank surfaces at temperatures of 50 F or above and meeting the following requirements:

Net weight per gallon, lb	8.4	ASTM D 1010
Nonvolatile Matter (24 hrs at 105±5 C)		
Min, Percent by Weight	50	ASTM D 1010
Water, Max, Percent by Weight	50	ASTM D 244
Final Set, Hour	Within 24	ASTM D 1010
Flexibility at 25±2 C Over a ½-inch mandrel through an arc of 180 degrees:		
Cracking, flaking or loss of adhesive	None	ASTM D 1010
Water Resistance:		ASTM D 1010
Blistering	None	
Reemulsification	None	
Loss of Adhesive	None	

(9) **Rubberized Asphalt and Plastic-Film Membrane.** This material shall consist of a preformed rubberized asphalt and plastic film with primer and cold applied rubberized asphalt mastic and asphaltic panel protection. Unless otherwise specified on the plans the membrane shall conform to the following requirements:

1. Performance Requirements, Properties

	Requirements	*Test Method*
Membrane	0.060 in thick, min.	
Permeance-Perms (grains/sq ft/hr/in hg)	0.1 max.	ASTM E 96, Method B
Water Absorption—72 hrs (% by wt.)	0.25% max.	ASTM D 1228
Accelerated aging—400 hr min.	no deterioration	ASTM D 822 & ASTM E 42 (procedure 4f)
Exposure to fungi in soil—16 weeks	unaffected	GSA-PBS-40711 (spec.)
Pliability—180 degree bend over 1/4-in mandrel—35 F	unaffected	ASTM D 146
Peel Adhesion —7 days dry +7 days @ 120 F +7 days dry (lb/in width)	5.0 min.	TT-S-00230 Modified
Peel Adhesion —7 days dry +7 days @ 120 F +7 days water immersion (lb/in width)	5.0 min.	TT-S-00230 Modified
Crack bridging on application (in.)	3/16	
Cycling over crack at —35 F (crack opened and closed from 0 to ¼")	100 cycles min.	TT-S-00230 Modified & TT-S-227 Modified
Puncture Resistance (lb)	40 min.	ASTM E 154

2. Certification

Manufacturer shall furnish certification that materials meet specification requirements.

3. Samples

A square foot sample shall be furnished for testing when required, for each 2000 sq ft of membrane to be supplied.

(10) Primer, Mastic and Semi-mastic. These materials shall be as recommended by the membrane manufacturer.

(11) Asphaltic Panels. Asphaltic panels shall be three-eighths inch

thick, not less than three feet wide by six feet long and shall meet the following requirements:

1. **Manufacture.** Each panel is formed as a 5-layer member, including a core of a selected blend of asphalt and inorganic mineral filler particles, a bottom reinforcing cover of asphalt-saturated felt and on the top, a cover of asphalt-saturated felt or fiberglass mat that is weather coated and has bond breaking film or coating.

   Asphalt and inorganic mineral filler particles shall be blended to form the core, with the asphalt forming the matrix of the blend to carry the particles. The mineral filler particles function to impart increased density and enhance stiffness and body in the core.

   The inorganic mineral filler particles constitute an aggregate bound in the asphalt matrix which will permit points of ballast rock to penetrate a short distance into the core to secure a good seating position. The aggregate will then resist further penetration and will support the ballast rock.

2. **Workmanship.** The protection course shall be free from defects affecting its serviceability and appearance; it shall have straight edges and square corners.

3. **Properties.** Asphaltic panels shall have the dimensions specified or shown on the plans. Tolerance of ± 1/16 inch in thickness, ± 1/8 inch in width and ± 1/4 inch in length shall be permitted.

Weight per sq. ft. minimum (0.375 inch thickness)	2.60 lb. per sq. ft.
Weight per sq. ft. minimum (0.50 inch thickness)	3.50 lb. per sq. ft.
Water absorption, max., ASTM D 545 (10)	1.0%
Thickness of asphalt weather-coating, rivuleted average, inches	0.020 minimum
Asphalt saturated felt liners	Max. 15 lb. per 100 sq. ft. after saturation
Asphalt content, core ASTM D 147 (3.1) (4.1)	50-60% by weight
Inorganic mineral filler particle content, core ASTM D 147 (3.1) (4.1)	Min 25% by weight
Resistance to decay, ASTM E 154 (10) (11)	No effect
Flexibility	No cracking or breaking

Brittleness at 39 F-43 F, ASTM D 994 (7.2) . . . . . No cracking or shattering
Heat distortion ASTM D 994 (7.1) . . . . . 0.3125 inch max.
Mineral Filler

Carefully selected and graded inorganic mineral filler particles shall be blended with the asphalt to form the matrix of each panel.

Weathercoating

Asphaltic weathercoating shall be flowed on the exterior top surface of the protection course. This coating shall be rivuleted in surface, shall be of sufficient thickness to provide complete dimensional stability to the material, when stored outdoors in direct sunlight. A suitable bond breaking film or coating shall be applied, to function as a release sheet. During installation, the asphalt-saturated felt side shall be placed against the membrane waterproofing; the side with the bond breaking film or coating shall be exposed to the ballast rock.

Resistance to Penetration, Dynamic Loading

The degree of resistance to penetration, when tested in accordance with ASTM D 1883, modified as described below, shall meet the following requirements:

Temperature, F	Dynamic Load, Lb	Penetration, In.
100	225	0.10 maximum
77	350	0.10 maximum
40	600	0.10 maximum

Pertinent modifications to ASTM D 1883:

Section 2.1 Loading Machine — as described, except that the movable head is capable of traveling at a uniform rate of 0.025 inches per minute.

Section 2.7 Penetration Piston — as described, except that the diameter of the piston shall be 1.0 inches.

Section 2.8 Gauges — as described.

Section 3 — Sample — Test three specimens 6 inches x 6 inches, cut from each board sample.

Section 4 — Preparation of Test Specimens — The test specimens shall be conditioned in a chamber maintained at the selected test temperature (± 3 F.) for a minimum of 2 hours prior to testing.

Section 5.1 — The test specimen, after conditioning, shall be immediately placed on the platform of the loading machine and the piston placed in the center of the specimen.

Section 5.2 — As described.

Section 5.3 — Apply the load on the penetration piston so that the rate of penetration is approximately 0.025 inches per minute. The penetration shall be recorded at an applied load reading of 40 lb, intervals, except where the load increases too fast to record (40 F. test).

4. **Inspection.** Samples from each lot shall be examined for appearance, straightness of edges and squareness of corners, and measured for width and length. They shall be calipered at four standard points each, with a micrometer having flat bearing surfaces at both contact points of not less than 1/4 inch diameter. The average of the readings shall be considered the thickness of the protection course.

5. **Flexibility Test.** Three specimens 3 inches by 12 inches shall be conditioned at 77 ± 5 F for not less than 2 hours immediately prior to being subjected to test.

   Place specimen with the 12-inch dimension perpendicular to and centered over the axis of a horizontal cylinder having a diameter of 19 ± 1 inches.

   Clamp one end and grasp the other end of the samples and bend around the cylinder at the uniform rate to complete bend in 60 ± 10 seconds until the specimen is in full contact with the surface of the cylinder.

   Examine for any cracking or breaking of the sample.

459.3. Construction Methods.

(1) **General.** Waterproofing material shall be stored in a manner to preclude damage. The material shall be kept dry at all times and shall be stored in a warm area prior to use in cold weather and out of direct sunlight in hot weather.

Asphalt planks, asphalt mats and asphaltic panels shall be stored so as to prevent warping and breaking.

Concrete decks and other unformed concrete surfaces to be waterproofed shall have a wood float finish. All concrete surfaces to be waterproofed shall cure for not less than seven days before waterproofing application.

Steel or concrete deck surfaces to be waterproofed shall be clean, dry, smooth and free of fins, sharp edges, and loose material. Grinders shall be used, if necessary, to remove protrusions that would puncture waterproofing membrane. The surfaces shall be free of such contaminants as form release agents, wax base curing compounds, oil and grease; if these contaminants are present, they shall be removed by abrasive blast cleaning. There shall be no depressions or pockets in horizontal surfaces of finished waterproofing.

Unless otherwise required expansion joints and other grooves shall be filled with plastic cement conforming to these specifications. Joints shall be dry and clean when filled. They shall be over-filled slightly to allow for shrinkage in drying.

The area to be waterproofed shall be thoroughly swept, vacuumed or air blown to remove all dust, dirt and loose foreign material. After the deck is clean, it shall be maintained in a clean condition until completion of waterproofing.

After the deck waterproofing work has started, no vehicular or equipment traffic shall be allowed on the bridge until after the work is complete and an adequate ballast cushion has been placed on the deck. The waterproofing shall be protected against damage from any source.

(2) **Type RR-1.** Type RR-1 waterproofing shall not be applied in wet weather, or when the ambient temperature is below 50 F, without written permission of the Engineer. The rubber membrane shall be free from punctures, pockets or folds.

The membrane shall be turned into drainage castings without break. Special care shall be taken to make the waterproofing effective along the sides and ends of girders and at stiffeners, gussets, etc. Grooves shall be filled with plastic cement.

The butyl membrane shall be installed by first applying the adhesive as recommended by the butyl rubber membrane manufacturer to ballast retainers, ends of deck and at necessary splices in a solid area extending from the edges back about 36 inches. Apply the butyl rubber membrane. Press the membrane firmly and uniformly in place against the previously applied adhesive. Avoid wrinkles and buckles. All splices, laps and flashing shall be made in accordance with the butyl rubber manufacturer's recommended procedures.

As soon as practicable after membrane placement, its protective cover shall be placed. The membrane surface shall be cleaned of all dirt and other foreign material just prior to placing the cover material. A coating of cold Asphalt-Base Emulsion shall be applied over the butyl rubber membrane at

the minimum rate of 4 gallons per 100 square feet of surface and place the asphalt plank or mat thereon.

The minimum thickness of protection shall be one inch and shall consist of asphalt plank or asphalt mat laid as provided hereafter. As successive planks are laid, the edges and ends of adjacent planks already laid shall be coated heavily with cold asphalt emulsion. The planks shall be laid tight against those previously laid so that the emulsion will completely fill the joints and be squeezed out the top. After all planks have been laid, any joints not completely full shall be filled with emulsion. When two layers of planks are used to obtain the required one inch cover thickness, the vertical joints of the second layer shall be offset not less than 4 inches transversely and one foot longitudinally from the joints in the lower layer.

Asphalt mat protection shall be applied in the same manner, except that the longitudinal butt joints in a single layer shall be staggered approximately 2 feet. When more than one thickness of asphalt mat is required, the same procedure shall be followed with all vertical joints offset at least one foot. A follow-up coating of asphalt emulsion approximately 6 inches in width shall be placed over all joints of the top layer.

Where deck waterproofing is carried over the back wall and down the back of the abutment for only several feet for the purpose of providing a proper flashing for the deck waterproofing, "Above Ground" moppings of asphalt as provided herein shall be used.

(3) **Type RR-2.** Type RR-2 waterproofing shall not be done when ambient, substrate or material temperatures are below 40 F or above 100 F; when wet or damp surfaces will restrict the full bonding of materials or when it is not possible to obtain first class workmanship.

Primer shall be applied to concrete decks with a brush or roller at a rate of 250 to 350 square feet per gallon until the surface is completely coated. Primer shall dry one hour or more, until tack-free, prior to application of membrane. If not covered with membrane within 36 hours, the surface shall be re-primed.

Steel decks shall not be primed.

Construction and control joints shall be covered by 16 gage galvanized sheet metal, of the width shown on the plans, centered on the joint. Joints in sheet metal shall be lapped 2 inches and corners of sheet metal shall be rounded to a 1/2 inch radius.

An inverted strip of membrane (plastic side down) 6 inches wider than the sheet metal shall be centered over the sheet metal and the joint. This shall then be covered over with a full width of membrane placed rubberized-

asphalt side down centered on the joint prior to placing membrane over the entire deck surface.

Inside corners shall be filled with a 1/2 inch fillet of mastic.

All inside and outside corners shall receive an initial 12 inch wide strip of membrane placed rubberized-asphalt side down and centered along the axis of the corner.

Membrane shall be laid with laps parallel to the long direction of the deck. If there is a deck slope normal to the laps, membrane shall be laid from the low point to the high point across the fall line so that the laps shed water as do shingles on a roof. Membrane shall be rolled onto the surface using care to eliminate any wrinkles or air spaces so that a smooth surface results. Succeeding strips of membrane shall be laid with a minimum 2-1/2 inch side and end overlap.

The 2-1/2 inch overlap shall be rolled down firmly and completely using a rubberized wheel-type roller weighing approximately 100 lbs.

Membrane applied to sloping or vertical surfaces shall be rolled down firmly over the entire area covered.

Outside edges of membrane shall be rolled as specified in the two preceding paragraphs and shall be finished with a trowelled bead of mastic.

Areas within 6 inches of drains and protrusions shall receive a double layer of membrane and mastic shall be liberally applied to the seams and the contact area between the membrane and drain or protrusion.

A careful inspection of the membrane shall be made and any holes, tears, misaligned or wrinkled seams or other discontinuities shall be patched with a piece of membrane extending at least 2-1/2 inches beyond the imperfection.

Membrane protection shall be placed as soon as possible after completion of the membrane application, but not more than five days later.

Semi-mastic shall be used to bond asphaltic panels to membrane and together. The bond coat shall be applied with a brush at a rate of 150 square feet per gallon to completely coat the surface. Asphaltic panels shall be placed while the bond coat is still tacky.

The first layer of asphaltic panels on the horizontal surface shall be laid on the bond coat with joints staggered not less than 18 inches, another bond coat, as specified in the preceding paragraph, shall be applied filling all joints in the asphaltic panels, and a second layer of asphaltic panels shall be laid with joints staggered not less than 18 inches from the joints in the first layer. Following application of the bond coat, one layer of asphaltic

panels shall then be placed and rolled firmly on any sloping or vertical surfaces. All joints in asphaltic panels shall be laid tight and shall be completely sealed with semi-mastic at the completion of the work.

459.4. Measurement. Measurement of waterproofing of the type specified on the plans will be made by the square yard of the waterproofing complete in place.

459.5. Payment. Payment for waterproofing will be made at the contract unit price bid per square yard for "Waterproofing" of the type specified on the plans measured as prescribed above. Such payment shall be full compensation for furnishing all materials, equipment, tools, labor and incidentals necessary to complete the work.

ITEM 460

CORRUGATED METAL PIPE

460.1. Description. This item shall govern for furnishing corrugated metal pipe conforming to these specifications, of the sizes, type and dimensions required on the plans; installing such pipe as designated on the plans or by the Engineer in conformity with the lines and grades given. This item shall include the furnishing and construction of such joints, and such connections to new or existing pipes, catch basins, endwalls, etc., as may be required to complete the work as shown on the plans. Pipe shall be full circle or pipe arch type as shown on the plans. The location of private driveway and side road pipe may be varied as deemed necessary by the Engineer.

460.2. Materials. Unless otherwise specified on the plans or required herein, corrugated metal pipe may be galvanized steel, aluminized steel, aluminum or precoated galvanized steel conforming to the following:

Galvanized Steel	AASHTO M 218
Aluminized Steel	AASHTO M 274
Aluminum	AASHTO M 197
Precoated Galvanized Steel	AASHTO M 246

Where reference is made herein to gage of metal, the reference is to U. S. Standard Gage for uncoated sheets. Tables in AASHTO M 218 and AASHTO M 274 list thicknesses for coated sheets in inches. The Tables in AASHTO M 197 list thicknesses in inches for clad aluminum sheets.

Sampling and testing of metal sheets and coils used for corrugated metal pipe shall be in accordance with Test Method Tex-708-I.

Damaged spelter coating shall be repaired by thoroughly wire brushing the damaged area and removing all loose, cracked or weld-burned spelter coating. The cleaned area shall be painted with a zinc dust-zinc oxide paint conforming to Federal Specifications TT-P-641b.

Damaged aluminized and/or polymer coating shall be repaired in accordance with the manufacturer's recommendations.

460.3. Fabrication.

(a) **Steel Pipe.** Galvanized or aluminized steel pipe shall be full circle or arch pipe conforming to AASHTO Designation: M 36, Type I, Type IA or Type II as specified on the plans.

It may be fabricated with circumferential corrugations, lap joint construction with riveted or spot welded seams or it may be fabricated with helical corrugations with continuous helical lock seam or ultra high frequency resistance butt-welded seams.

(b) **Aluminum Pipe.** Pipe shall conform to the requirements of AASHTO Designation: M 196, Type I, Type IA, circular pipe, or Type II, pipe arch as specified on the plans.

It may be fabricated with circumferential corrugations, lap joint construction with riveted or spot welded seams or it may be fabricated with helical corrugations with a continuous helical lock seam.

Portions of aluminum pipe that are to be in contact with concrete or metal other than aluminum, shall be insulated from these materials by a coating of bituminous material meeting the performance requirements set forth in Subarticle 460.7.(1). The coating applied to the pipe or pipe arch to provide an insulation between the aluminum and other material shall extend a minimum distance of one foot beyond the area of contact.

(c) **Precoated Galvanized Steel Pipe.** Pipe shall be full circle or arch pipe conforming to AASHTO Designation: M 245, Type I, Type IA or Type II as specified on the plans.

It may be fabricated with circumferential corrugations, lap joint construction with riveted seams or it may be fabricated with helical lock seams.

Unless otherwise noted on the plans, both the inside and outside coating shall be a minimum of 10 mils.

460.4. Selection of Gages. The plans will provide a summary indicating the location and length for all pipe. For full circle pipe, the diameter, permissible corrugations and required gages will be shown. For pipe arch, the design size and permissible corrugations only will be shown, since the shape and minimum gage for pipe arch shall be as designated in Tables A, B or C for the specified design size and corrugation for steel pipe, and in Table D for aluminum pipe.

Design Size	*Span Inches	*Rise Inches	Minimum Cover Inches	Minimum Gage Required	Coated Thickness Inches	Equivalent Diameter Full Circle Pipe Inches
1	17	13	12	16	0.064	15
2	21	15	12	16	0.064	18
3	28	20	12	16	0.064	24
4	35	24	12	16	0.064	30
5	42	29	12	14	0.079	36
6	49	33	12	14	0.079	42
7	57	38	12	12	0.109	48
8	64	43	12	12	0.109	54
9	71	47	12	10	0.138	60

*The fill heights for all sizes of pipe arch are limited to a maximum of 7 feet.

A tolerance of plus or minus one inch or 2 percent of equivalent circular diameter, whichever is greater, will be permissible in span and rise, with all dimensions measured from the inside crests of the corrugations.

Table A
STEEL PIPE ARCH
2 2/3-INCH BY 1/2-INCH CORRUGATIONS
H-20 LOADING

Design Size	*Span Inches	*Rise Inches	Minimum Cover Inches	Minimum Gage Required	Coated Thickness Inches	Equivalent Diameter Full Circle Pipe Inches
7	53	41	12	**14	0.064	48
8	60	46	12	**14	0.064	54
9	66	51	12	**14	0.064	60
10	73	55	12	**14	0.064	66
11	81	59	12	14	0.079	72
12	87	63	12	14	0.079	78
13	95	67	12	12	0.109	84
14	103	71	18	12	0.109	90
15	112	75	18	12	0.109	96
16	117	79	18	12	0.109	102
17	128	83	24	10	0.138	108
18	132	87	24	10	0.138	114
19	142	91	24	10	0.138	120

*The fill heights for all sizes of pipe arch are limited to a maximum of 10 feet.

A tolerance of plus or minus 1 inch or 2 percent of equivalent circular diameter, whichever is greater, will be permissible in span and rise, with all dimensions measured from the inside crests of the corrugations.

**16 gage may be used if the required pipe arch shape can be produced to the satisfaction of the Engineer.

Table B
STEEL PIPE ARCH
3-INCH BY 1-INCH CORRUGATIONS
H-20 LOADING

Design Size	*Span Inches	*Rise Inches	Minimum Cover Inches	Minimum Gage Required	Coated Thickness Inches	Equivalent Diameter Full Circle Pipe Inches
11	81	59	12	12	0.109	72
12	87	63	12	12	0.109	78
13	95	67	12	12	0.109	84
14	103	71	18	12	0.109	90
15	112	75	18	12	0.109	96
16	117	79	18	12	0.109	102
17	128	83	24	10	0.138	108
18	137	87	24	10	0.138	114
19	142	91	24	10	0.138	120

*The fill heights for all sizes of pipe arch are limited to a maximum of 10 feet.

A tolerance of plus or minus one inch or 2 percent of equivalent circular diameter, whichever is greater, will be permissible in span and rise, with all dimensions measured from the inside crests of the corrugations.

Table C

STEEL PIPE ARCH
5-INCH BY 1-INCH CORRUGATIONS
H-20 LOADING

Design Size	*Span Inches	*Rise Inches	Minimum Cover Inches	Minimum Gage Required	Coated Thickness Inches	Equivalent Diameter Full Circle Pipe Inches
1	17	13	12	16	0.060	15
2	21	15	12	16	0.060	18
3	28	20	12	14	0.075	24
4	35	24	12	14	0.075	30
5	42	29	18	12	0.105	36
6	49	33	18	12	0.105	42
7	57	38	18	10	0.135	48
8	64	43	18	10	0.135	54
9	71	47	18	8	0.164	60

*All dimensions are measured from the inside crests of the corrugations. A tolerance of plus or minus one inch or 2 percent of the equivalent circular diameter, whichever is greater will be permissible in span and rise.

*The fill heights for all sizes of pipe arch are limited to a maximum of 7 feet.

Table D

ALUMINUM PIPE ARCH
2 2/3-INCH BY 1/2-INCH CORRUGATIONS
H-20 LOADING

460.5. **Coupling Bands.** Except as otherwise required herein, coupling bands and other hardware for galvanized or aluminized steel pipe shall conform with the requirements of AASHTO Designation: M 36 for steel pipe and AASHTO Designation: M 196 for aluminum pipe. Field joints for each type of corrugated metal pipe shall maintain pipe alignment during construction and prevent infiltration of side material during the life of the installation.

Coupling bands shall be not more than 3 nominal sheet thicknesses lighter than the thickness of the pipe to be connected and in no case lighter than 0.052 inch for steel or 0.048 inch for aluminum.

Coupling bands shall be made of the same base metal and coating (metallic or otherwise) as the pipe.

Coupling bands shall lap equally on each of the pipes being connected to form a tightly closed joint after installation.

Pipes furnished with circumferential corrugations shall be field jointed with corrugated locking bands. This includes pipe with helical corrugations which has reformed circumferential corrugations on the ends. The locking bands shall securely fit into at least one full circumferential corrugation on each of the pipe ends being coupled. The minimum width of the corrugated locking bands shall be as shown below for the corrugation which corresponds to the end circumferential corrugations on the pipes being joined:

10½ inches wide for 2 2/3 inch x 1/2 inch corugations.
12 inches wide for 3 inch x 1 inch corrugations.

Helical pipe without circumferential end corrugations will be permitted only when it is necessary to join a new pipe to an existing pipe which was installed with no circumferential end corrugations. In this event pipe furnished with helical corrugations at the ends shall be field jointed with either helically corrugated bands or with bands with projections (dimples). The minimum width of helically corrugated bands shall conform to the following:

12 inches wide for one-half inch deep helical end corrugations.
14 inches wide for one inch deep helical end corrugations.

Bands with projections shall have circumferential rows of projections with one projection for each corrugation. The width of bands with projections shall be not less than the following:

12 inches wide for pipe diameters up to and including 72 inches. The bands shall have two circumferential rows of projections.

16 1/4 inches wide for pipe diameters of 78 inches and greater. The bands shall have four circumferential rows of projections.

Unless otherwise shown on the plans, all bolts for coupling bands shall be 1/2 inch diameter. Bands 12 inches wide or less will have a minimum of 2 bolts, and bands greater than 12 inches wide shall have a minimum of 3 bolts.

Galvanized bolts may be hot dip galvanized in accordance with the requirements of AASHTO Designation: M 232, mechanically galvanized to provide the same requirements as AASHTO Designation: M 232, or electrogalvanized per ASTM A 164 Type RS.

460.6. Designation of Type. The types of pipe will be indicated on the plans by the use of one of the following descriptions:

Corrugated Galvanized Steel Pipe or Pipe Arch

Corrugated Galvanized Steel Pipe or Pipe Arch (Bituminous Coated)

Corrugated Galvanized Steel Pipe or Pipe Arch (Bituminous Coated, Paved Invert)

Corrugated Galvanized Steel Pipe or Pipe Arch (Bituminous Coated, Smooth Lining)

Corrugated, Aluminum Coated (Aluminized Type 2) Steel Pipe or Pipe Arch

Corrugated, Aluminum Coated (Aluminized Type 2) Steel Pipe or Pipe Arch (Bituminous Coated)

Corrugated, Aluminum Coated (Aluminized Type 2) Steel Pipe or Pipe Arch (Bituminous Coated, Paved Invert)

Corrugated Aluminum Pipe or Pipe Arch

Corrugated Aluminum Pipe or Pipe Arch (Bituminous Coated)

Corrugated Aluminum Pipe or Pipe Arch (Bituminous Coated, Paved Invert)

Corrugated Aluminum Pipe or Pipe Arch (Bituminous Coated, Smooth Lining)

Corrugated Galvanized Steel Pipe or Pipe Arch (Polymer Coated)

When designated as Corrugated Metal Pipe without a type or coating designation, the Contractor may furnish any of the above types.

460.7. Protective Coating.

(1) **Bituminous Coated.** Bituminous coated pipe or pipe arch shall conform to this specification both as to base metal and fabrication; and in addition shall be coated inside and out with a bituminous coating which shall meet the performance requirements set forth herein and with AASHTO M-190. The pipe shall be uniformly coated inside and out to a minimum thickness of 0.05 inch, measured on the crests of the corrugations.

When specified as smooth lining, the pipe shall receive additional bituminous material applied to the full inner circumference, to form a smooth inside lining, with a minimum thickness of one-eighth of an inch above the crest of the corrugations.

The bituminous coating shall adhere to the metal tenaciously; shall not chip off in handling; and shall protect the pipe from deterioration as evidenced by samples prepared from the coating material succesfully meeting the Shock Test and Flow Test in accordance with Test Method Tex-522-C.

(2) **Paved Invert.** Where a paved invert is specified, the pipe, or pipe arch, in addition to the fully coated treatment described above, shall receive additional bituminous material, of the same specification as above, applied to the bottom quarter of the circumference to form a smooth pavement with a minumum thickness of one-eighth of an inch above the crests of the corrugations.

460.8. Construction Methods. Corrugated metal pipe culverts shall be constructed from the specified materials in accordance with the following method and procedure.

(1) **Excavation.** All excavation shall be in accordance with the requirements of the Item, "Structural Excavation", except where tunneling or jacking methods are shown on the plans or permitted by the Engineer. When pipes are laid in a trench, the trench when completed and shaped to receive the pipe, shall be of sufficient width to provide free working space for satisfactory bedding and jointing and thorough tamping of the backfill and bedding material under and around the pipe.

The Contractor shall make such temporary provision as may be necessary to insure adequate drainage of the trench and bedding during the construction operation.

(2) **Foundation.** The pipe shall be bedded in a foundation of stable earth material carefully and accurately shaped to fit the lower part of the pipe exterior for at least ten percent of its overall height. When requested by the Engineer, the Contractor shall furnish a simple template for each size and shape of pipe to be placed for use in checking the shaping of bed-

ding. The template shall consist of a thin plate or board cut to match the lower half of the cross section of the pipe.

Where rock, in either ledge or boulder form exists within a depth of 0.75D below the pipe, where D is the diameter of full circle pipe and the span dimension for pipe arch, it shall be removed below grade and replaced with suitable materials so that a slightly yielding compacted earth cushion is provided below the pipe of a thickness not less than one half of an inch per foot of fill height over the pipe, with a minimum of 12 inches and a maximum of 0.75D.

Where the soil encountered at the established grade is quicksand, muck or similar unstable material, such unstable soil shall be removed and replaced in accordance with the requirements of the Item, "Structural Excavation".

In any case cement stabilized materials for backfill will not be permitted to come into contact with any uncoated aluminum or aluminized pipe surface.

(3) **Laying Pipe.** Unless otherwise authorized by the Engineer, the laying of pipes on the prepared foundation shall be started at the outlet end, the separate sections firmly joined together, with outside laps of circumferential joints pointing upstream and with longitudinal laps on the sides. Any metal in joints which is not protected by galvanizing or aluminizing shall be coated with a suitable asphaltum paint. Proper facilities shall be provided for hoisting and lowering the sections of pipe into the trench without damaging the pipe or disturbing the prepared foundation and the sides of the trench. Any pipe which is not in alignment or which shows any undue settlement after laying, or is damaged, shall be taken up and relaid without extra compensation.

Multiple installations of corrugated metal pipe and pipe arches shall be laid with the center lines of individual barrels parallel. Unless otherwise indicated on the plans, the following clear distances between outer surfaces of adjacent pipes shall be maintained:

Diameter of Pipe	Clear Distance Between Pipes Full Circle and Pipe Arch	Pipe Arch Design No.
18″	1′-2″	2
24″	1′-5″	3
30″	1′-8″	4
36″	1′-11″	5
42″	2′-2″	6
48″	2′-5″	7
54″	2′-10″	8
60″-84″	3′-2″	9
90″-120″	3′-5″	10 & Over

(4) **Connections.** Where new structures are constructed as extensions to structures in place or are jointed to existing structures, the construction shall include all work necessary to provide a proper connection between the new structure and the old as indicated on the plans, including coating of the connection with bituminous material when required.

(5) **Reuse of Existing Headwalls.** When existing headwalls and aprons are specified on the plans for reuse, the portion to be reused shall be severed from the existing culvert, and moved to the new position previously prepared, by approved methods.

Connections shall conform to the requirements for joining sections of pipes as indicated herein or as shown on the plans. Any headwalls, aprons or pipe attached to the headwall damaged during moving operations shall be restored to their original condition at the Contractor's expense. The Contractor, if he so desires, may remove and dispose of the existing headwalls and aprons and construct new headwalls at his own expense, in accordance with the pertinent specifications and design indicated on the plans or as furnished by the Engineer.

(6) **Backfilling.** Backfilling for the metal pipe structure is a critical phase of the construction, and strict adherence to construction methods is required. After the metal pipe structure has been completely assembled on the proper line and grade and headwalls constructed when required by the plan details, selected material from excavation or borrow shall be placed along both sides of the completed structure(s) equally, in uniform layers not exceeding 6 inches in depth (loose measurement), wetted if required and thoroughly compacted between adjacent structures and between the structure(s) and the sides of the trench, or for a distance each side of the structure(s) equal to the diameter of the pipe. Backfill material shall be compacted to the same density requirements as specified for the adjoining sections of embankment in accordance with the governing specifications therefor. Above the three-fourths point of the structure, the fill shall be placed uniformly on each side of the pipe in layers not to exceed 12 inches.

For backfilling, until a minimum cover of 12 inches is obtained, only hand operated tamping equipment will be allowed within vertical planes 2 feet beyond the horizontal projection of the outside surfaces of the structure. Pipe damaged by the Contractor's backfilling operation shall be removed and replaced by the Contractor at no additional cost to the State.

Unless otherwise shown on the plans or permitted in writing by the Engineer, no heavy earth moving equipment will be permitted to haul over the structure until a minimum of 4 feet of permanent or temporary, compacted fill has been placed thereon. Pipe damaged by the Contractor's equipment shall be removed and replaced by the Contractor at no additional cost to the State.

During the backfilling operations, special emphasis is placed upon the need for obtaining uniform backfill material and uniform compacted density throughout the length of the structure so that unequal pressure will be avoided. Extreme care is to be taken to insure proper backfill under the structure.

Prior to adding each new layer of loose backfill material, until a minimum of 12 inches of cover is obtained, an inspection will be made of the inside periphery of the structure for local or unequal deformation caused by improper construction methods. Evidence of such will be reason for such corrective measures as may be directed by the Engineer.

460.9. Measurement. Corrugated Metal Pipe of the type specified, will be measured by the linear foot. Such measurements will be made between the ends of the barrel along its flow line. Where spurs or branches or connections to existing pipe lines are involved, measurement of the spur or new connecting pipe will be made from the intersection of its flow line with the outside surface of the pipe into which it connects. Where inlets, headwalls, catch basins, manholes, junction chambers, or other structures are included in lines of pipe, that length of pipe tieing into the structure wall will be included for measurement but no other portion of the structure length or width will be so included.

For multiple pipes, the measured length will be the sum of the lengths of the barrels, measured as prescribed above.

When actual field measurement is required by Article 460.10, measurement will be made by the linear foot of pipe in place between the ends of the pipe along its flow line as installed. If no adjustment is required under Article 460.10., no additional measurement or calculations will be made.

In the event of a change in design which either increases or decreases the quantity of pipe, the variation in quantity will be measured as prescribed above and the quantity shown on the plans and in the propsoal will be increased or decreased as the case may be.

460.10. Payment. Payment for corrugated metal pipe measured as prescribed above, will be made at the contract unit price bid per linear foot for the various sizes of "Corrugated Metal Pipe" or "Corrugated Metal Pipe Arch", of the material and protective coating as indicated in the plans and proposal, and of the gages shown in the plans.

The quantity to be paid for will be that quantity shown on the contract plans and in the proposal, except as may be modified by the following:

Either party to the contract may request an adjustment of the quantities shown on the contract plans (by each separate bid item) if the

quantities calculated as outlined in Article 460.9., vary from those shown on the contract plans by more than 5 percent.

The party to the contract which requests an adjustment shall present, to the other, two copies of field measurements and calculations showing the revised length for the structure or structures in question. These revised lengths of pipe, when proven correct, together with all other pipe under the same bid item, shall constitute the final quantity for which payment will be made. Quantities revised in this manner will not be subject to the provisions of Article 4.5.

Payment for revised quantities due to a change in design will be paid for at the unit price bid per linear foot measured as provided in Article 460.9. Quantities revised in this manner will be subject to the provisions of Article 4.5.

Payment shall be full compensation for furnishing and transporting the pipe; for all required coatings and invert paving; hauling and placing of select material where required for bedding pipe in rock excavation; the preparation and shaping of beds; hauling, placing and joining of pipes; for all connections to existing structures; for moving and reusing headwalls where required by the plans, and for all other items of materials, labor, equipment, tools and incidentals necessary to complete the culvert in accordance with the plans and these specifications, except excavation and backfill which will be paid for in accordance with the Item, "Structural Excavation". Where pipes are laid on a skew or where pipe ends are cut to the fill slope, full compensation for cutting the ends parallel with the centerline of the highway or the fill slope shall be considered as included in the price bid per linear foot for the designated item of pipe and no additional allowance will be made therefor.

ITEM 461

STRUCTURAL PLATE STRUCTURES

461.1. Description. This item shall consist of furnishing and installing structural plate pipes, pipe arches, arches, underpasses, box culverts and special shapes conforming to these specifications, of the sizes, out dimensions and material required by the plans, at the places designated on the plans or by the Engineer, in conformity with established lines and grades. Structural plate pipes shall be furnished round or elongated, as indicated on the plans.

461.2. Materials and Manufacture.

(1) **Plates.** The plates and fasteners used for construction of structural plate pipes, pipe arches, arches, underpasses, box culverts and special shapes shall conform to AASHTO Designation: M 167 for galvanized corrugated steel structures, and to AASHTO Designation: M 219 for aluminum alloy structures.

Steel fasteners may be mechanically galvanized, or hot-dip galvanized, in accordance with the subarticle, Galvanizing, of the Item, "Metal for Structures".

Steel plates shall consist of structural units of corrugated galvanized metal. Single plates shall be furnished in standard sizes to permit structure length increments of 2 feet. Plates will have approximately a 2 inch lip beyond each end crest, which results in the actual length of a given structure being approximately 4 inches longer than the nominal length, except when skewed or beveled. Footings for arches shall be designed and constructed to accommodate this additional length.

Aluminum plate shall consist of structural units of corrugated aluminum alloy. For aluminum alloy structures, cut plates shall be furnished on structure ends to permit structure length increments of one foot.

Plates shall be formed to provide bolted lap joints. The bolt holes shall be so punched that all plates having like dimensions, curvature, and the same number of bolts per foot of seam shall be interchangeable. Each plate shall be curved to the proper radius so that the cross-sectional dimensions of the finished structure will be as indicated on the plans. Joints shall be staggered so that not more than three plates are jointed at any one point. Unless otherwise specified, bolt holes along those edges of the plates that will form longitudinal seams in the finished structure shall be (a) staggered in rows 2 inches apart, with one row in the valley and one in the crest of the corugations and not less than four bolts per foot for galvanized steel structures or (b) in rows 1-3/4" apart with 2 bolts in each valley and on each crest and not less than 16 bolts per three feet for aluminum alloy structures. Bolt holes along those edges of the plates that will form circumferential seams in the finished structure shall provide for a bolt spacing of not more than 12 inches. The minimum distance from center of hole to edge of the plate shall be not less than 1-3/4 times the diameter of the bolt. The diameter of the bolt holes in the longitudinal seams shall not exceed the diameter of the bolt by more than one-eighth inch. Plates for forming skewed or sloped ends

shall be cut so as to give the angle of skew or slope specified. Burned edges shall be free from oxide and burrs, shall present a workmanlike finish and legible identification numerals shall be placed on each plate to designate its proper position in the finished structure.

(2) **Metal Headwalls.** The material for metal headwalls shall comply with requirements shown on the plans.

(3) When required, aluminum alloy inverts, toe walls, footings and closure plates shall conform to the material requirements for the aluminum structural plate structure. Extruded aluminum transverse stiffeners shall conform to ASTM Designation: B 221, Alloy 6061-T6.

(4) **Concrete.** Concrete and reinforcing steel shall conform to the Items, "Concrete for Structures" and "Reinforcing Steel". Unless otherwise shown on the plans, concrete for footings and headwalls shall be Class "A". Riprap for slope protection and for invert paving, when required, shall be Class "B" concrete, with reinforcement as specified on the plans, and shall conform to the requirements of the Item, "Riprap".

(5) Material for membrane curing shall conform to the Item, "Membrane Curing".

461.3. Visual Inspection. The Contractor shall furnish an itemized statement of the number and size of plates in each shipment. From this list a visual inspection shall include an examination of the plates for deficiency in size, radius of curvature specified, and any evidence of poor workmanship as outlined herein. The inspection may include the taking of samples for chemical analysis and determination of weight of spelter coating. The plates making up the shipment shall fully meet the requirements of these specifications. Any plates failing to do so will be rejected.

461.4. Mill and Factory Inspection. If the Engineer so elects, he may have the material inspected and sampled in the rolling mill or in the shop where fabricated. He may require from the mill the chemical analysis of any plate. The inspection, either in the mill or in the shop, shall be under the direction of the Engineer. The Engineer or his representative shall have free access to the mill or shop for inspection and every facility shall be extended to him for this purpose. Any material which has been previously rejected at the mill or shop and included in a later lot will be cause for rejection unless it has been satisfactorily repaired.

461.5. Workmanship. Structural plates on which the spelter coating has been damaged, or which show defective workmanship, shall be rejected, except that damaged areas of spelter coating deemed by the Engineer to be of a minor nature may be repaired by painting with a zinc dust-zinc oxide paint conforming to Federal Specification TT-P-641 b. The requirement applies not only to the individual plates but to the shipment as a whole. The

following defects are considered to be poor workmanship. The presence of any or all of them in any individual structure plate will be cause for rejection:

(a) Uneven laps,
(b) Elliptical shaping (unless specified),
(c) Variation from a straight center line,
(d) Ragged edges,
(e) Loose, uneven lined or spaced bolts,
(f) Illegible brand,
(g) Bruised, scaled or broken spelter coating, or
(h) Dents or bends in the metal itself.

461.6. Design.

(1) **Gage or Minimum Thickness and Corrugations for Structural Plate.** The gage or minimum thickness and permissible corrugations of metal plates to be furnished for each structure will be shown on the plans.

(2) **Skewed Structures.** The end skew shall not exceed 45 degrees. When the skew of arches is more than 15 degrees, the length of the structure shall be such that no portion of the live load will be carried by the cut portion of the arch end. Where right of way or other conditions do not permit the required length, the cut end shall be supported by a rigid headwall designed to meet the conditions. When the skew angle of pipes exceeds 20 degrees, and the structure has the ends cut to fit a slope, the ends shall be reinforced with concrete riprap or other suitable end treatment as indicated on the plans or as directed by the Engineer. If headwalls are required, the plates shall be anchored to the headwall with not less than three-fourths inch diameter by 6 inch minimum length bolts, at not over 19 inch centers. If structures are to have skewed ends, bevels, step-bevels or other special end treatment, this information will be shown on the plans.

(3) **Multiple Structures Installed in Parallel Lines.** Where multiple lines of pipes, pipe arches or box culverts greater than 48 inches in diameter or span are used, they shall be spaced so that adjacent sides of the pipe shall be at least one-half diameter or three feet apart, whichever is less, to permit adequate compaction of backfill material. For diameters up to and including 48 inches, the minimum spacing shall be not less than 24 inches.

(4) **Substructure for Arches.** The substructure for structural plate arches shall be as detailed on the plans.

461.7. Designation of Type. The type(s) of structure will be indicated on the plans by one of the following descriptions:

Structural Plate Pipe (Galv. Steel)
Structural Plate Pipe (Alum.)
Structural Plate Pipe Arch (Galv. Steel)

Structural Plate Pipe Arch (Alum.)
Structural Plate Arch (Galv. Steel)
Structural Plate Arch (Alum.)
Structural Plate Underpass (Galv. Steel)
Structural Plate Underpass (Alum.)
Structural Plate Box Culvert (Galv. Steel)
Structural Plate Box Culvert (Alum.)

When designated as one of the above types without the material being shown, such as;

Structural Plate Pipe
Structural Plate Pipe Arch
Structural Plate Arch
Structural Plate Underpass
Structural Plate Box Culvert

the Contractor may furnish the structure in either galvanized steel, or aluminum.

461.8. Construction Methods. Structural plate structures, shall be constructed from the specified materials in accordance with the plans and this item.

(1) Excavation. Unless otherwise required, all excavation shall be in accordance with the requirements of the Item, "Structural Excavation". Trenches for pipes, pipe arches, underpasses or box culverts shall be of sufficient width to provide free working space for erection and thorough tamping of the backfill and bedding material under and around the structure. If the quality of the native soil is less than that of the proposed backfill material, the excavation shall extend, to each side of the barrel, a minimum horizontal distance of half the span or two-thirds of the total rise, whichever is greater. The Contractor shall make such temporary provisions as may be necessary to insure adequate drainage of the trench and bedding during the construction operation.

(2) Foundations, Structural Plate Structures with Metal Inverts. These structures shall be bedded in a foundation of sandy earth material carefully and accurately shaped to fit the lower part of the pipe for at least ten percent of its overall height, except that the length of bedding arc need not exceed the width of the bottom plate. The sandy material shall be at least three inches in thickness so as to obtain uniform seating of the corrugations on the pipe bed. For culverts the bedding specified herein shall be the full width of the invert.

Where rock, in either ledge or boulder formation, is encountered, it shall be removed below grade and replaced with a compacted earth cushion having a thickness of not less than one-half inch per foot height of fill over the

top of the pipe, with the minimum allowable thickness of 12 inches and a maximum of 24 inches under the pipe. Where the soil encountered at the established grade is a quicksand, muck or similar unstable material, it shall be removed and replaced in accordance with the requirements of the Item, "Structural Excavation". Special bedding, when required, shall be as shown on the plans.

(3) **Foundations, Structural Plate Structures with Reinforced Concrete Footings.** Footings for these structures shall be formed and finished to true lines and grades as established by the Engineer. Anchors or slots (for box culverts) shall be set to true line and grade when placing concrete for each substructure unit. The work of placing substructure units shall conform to the requirements of the Item, "Concrete Structures", the Item, "Concrete for Structures", and the Item, "Reinforcing Steel".

Footings shall be placed entirely on either (a) rock, shale or similarly hard material, or (b) firm soil or compacted soil cushion. When part of the founding area is rock, it shall be undercut and replaced with a minimum 12 inch thick compacted soil cushion. When a thin layer of soil is partially covering rock within the bearing area and when practical to do so, the soil may be removed and the footings placed directly on rock in accordance with details shown on the plans.

(4) **Erection.** Structural plate structures shall be installed in accordance with the plans and with this item.

Any steel in joints which is not protected by galvanizing shall be coated with suitable asphaltum paint.

Pipes and/or plates shall be handled carefully to avoid damage to any protective coating. Damaged coatings shall be repaired.

Anchor bolts used for anchoring plates to headwalls or other concrete end treatment shall be three-fourths inch diameter by six inch minimum length on not more than 19 inch centers.

No plates for arch structures shall be placed until the substructure has cured for a minimum of three days.

When all plates are in position, all bolts not already in place shall be inserted and all nuts tightened progressively and uniformly, beginning at one end of the structure. All nuts shall be tightened a second time to a torque of not less than 150 ft-lbs nor more than 300 ft-lbs for steel bolts and not less than 100 ft-lbs nor more than 150 ft-lbs if using aluminum bolts. It is essential that bolts be well tightened. If an impact wrench is used, a sufficient number of bolts should be checked with a long-handled, structural or socket wrench or a torque wrench to insure that they are properly tightened. All service bolts used in drawing the plates together shall be replaced with standard high strength bolts.

(5) **Shape Control.** The Contractor shall furnish acceptable shape control devices for monitoring the horizontal and vertical shape of the structure(s). The shape shall be kept within two percent of design measurements (span or rise, whichever is greater) or 5 inches whichever is less during erection and backfilling.

(6) **Backfilling.** Backfilling and/or construction of the embankment around and over the pipe is a critical phase of the construction and strict adherence to these construction methods is required. Backfilling and/or embankment construction around the pipe shall be performed in accordance with the Item, "Structural Excavation", except as modified herein.

Within vertical planes two feet beyond the horizontal limits of the structure and until a minimum of two feet of cover has been compacted over the structure, only hand operated, mechanical tamping equipment will be permitted.

Unless otherwise shown on the plans or permitted in writing by the Engineer, no heavy earth moving equipment will be permitted to haul over the structure until a minimum of 4 feet of permanent or temporary, compacted fill has been placed thereon. Plates or structures damaged by the Contractor's equipment or backfilling operation shall be removed and replaced by the Contractor at his expense.

During the backfilling operations, extreme care shall be taken to avoid unequal pressures and to obtain uniformly compacted backfill material of uniform density throughout the length of the structure and to insure proper backfill under the structure.

Prior to adding each new layer of loose backfill material, until a minimum two feet of cover is obtained, an inspection will be made of the inside periphery of the structure to determine any local or unequal deformation caused by improper construction methods.

The structure shall be backfilled so that when backfill is complete the inside dimensions shall be within tolerances set forth in shape control, Article 461.8.(5). In the case of arches (does not apply to pipe arches) when backfilling is completed before headwalls are placed, the first material shall be placed midway between the ends of the arch, forming as narrow a ramp as possible until the top of the arch is reached. The ramp shall be constructed evenly from both sides, and the backfilling material shall be thoroughly compacted as it is placed. After the two ramps have been constructed to the top of the arch, the remainder of the backfill shall be deposited from the top of the arch both ways from the center, to the ends and as evenly as possible on both sides of the arch. If the headwalls are built before the arch is backfilled, the fill material shall be placed first adjacent to one headwall until the top of the arch has been reached, after which the fill shall be dumped from

the top of the arch toward the other headwall, with care being taken to deposit the material evenly on both sides of the arch.

For multiple structures the same backfill phases will be performed for all structures more or less simultaneously. Backfilling between the barrels will usually require that the material be placed with a crane and bucket or other suitable equipment. Backfill material shall not be dropped from a height, or concentrated in such an amount prior to distribution over the top arc, that damage to the flexible structure will result. Compaction of this backfill shall be with hand operated tampers or other acceptable equipment.

461.9. Measurement. Structural plate pipes, pipe arches, arches, underpasses or box culverts of the gage or minimum thickness, and corrugation required by the plans, will be measured by the linear foot of each structure, along its flow line between the ends of the structure.

For multiple structures, the measured length will be the sum of the lengths of barrels as prescribed above.

Aluminum alloy inverts, toe walls, footings, closure plates and stiffeners, when required, will be considered a part of the requirements of the structure, and will not be measured for payment.

461.10. Payment. Payment for "Structural Plate Pipes, Pipe Arches, Arches, Underpasses or Box Culverts", measured as prescribed above, will be made at the unit price bid for the various sizes, gage or minimum thickness, and of the required material, if specified, of the various items required by the plans, complete in place.

This payment shall be full compensation for furnishing, transporting and erecting; for handling and placing of select fill material; for all bolts, nuts, washers, anchor bolts and anchor channels or angles; for furnishing all aluminum alloy inverts, toe walls, footings, closure plates and stiffeners, when required; and for all other items of material, labor, equipment, tools and incidentals necessary to complete the various installations in accordance with these specifications.

ITEM 462

CONCRETE BOX CULVERTS

462.1. Description. This item shall govern the materials used, and the constructing, furnishing and placing of concrete box culverts at the locations shown, and in accordance with the details on the plans. Unless otherwise shown on the plans, the Contractor shall have the option of furnishing cast-in-place, precast (formed) or precast (machine-made) box culverts.

When cast-in-place box culverts are used they shall conform to the details of the culvert designs shown in the plans. When precast box culverts of either type are used, they shall conform to the details of the precast box designs shown in the plans.

The requirements of the Items, "Concrete Structures" and "Concrete for Structures" shall govern for cast-in-place concrete culverts and for precast (formed) box culverts except where otherwise specified herein.

462.2. Materials.

(1) **Concrete.** Unless otherwise shown on the plans, Class "A" concrete shall be used for cast-in-place and precast (formed) box culverts conforming to the requirements of the Items, "Concrete Structures" and "Concrete for Structures", except that Class "S" concrete will be required for direct traffic box culverts.

Concrete for precast (machine-made) box culverts shall meet the requirements of ASTM: C76, Sections: Cement, Aggregates and Mixture and shall have a minimum 28 day compressive strength of 4,000 psi. Lightweight coarse aggregate, meeting the requirements of this Item, may be used in lieu of natural coarse aggregate. Lightweight fine aggregate will not be permitted. When lightweight coarse aggregate is used, the concrete shall have a minimum splitting tensile strength of 425 psi, in addition to a 28 day compressive strength of 4000 psi, and shall contain entrained air as directed by the Engineer.

When Type II cement is required by the plans, it shall be used in the concrete.

(2) **Reinforcement.** Reinforcing steel shall conform to the requirements of the Item, "Reinforcing Steel" and the details shown on the plans.

(3) **Jointing.** Materials for jointing shall conform to the requirements of the Item, "Reinforced Concrete Pipe Culverts".

(4) **Membrane Curing.** Materials for membrane curing shall conform to the Item, "Membrane Curing".

(5) **Admixtures.** Unless otherwise shown on the plans, air entraining, water reducing and/or retarding admixtures may be used. They shall conform with the requirements of the Item, "Concrete Admixtures."

(6) **Lightweight Coarse Aggregate.** Lightweight coarse aggregate shall have strong durable particles, conforming to the requirements contained herein. When tested by approved laboratory methods, lightweight coarse aggregate shall conform to the following:

(a) **Gradation** — The coarse aggregate shall conform to the grading requirements shown in Table 1.

PERCENT RETAINED ON SIEVE				
3/4"	1/2"	3/8"	#4	#8
0-10	–	45-80	90-100	95-100

Table 1—Coarse Aggregate Gradation

(b) Unit Weight — The maximum dry loose unit weight shall not exceed 55 pounds per cu. ft. If the unit weight of any shipment of lightweight aggregate differs by more than 4 percent from that of the sample submitted for acceptance, the shipment may be rejected. Tests shall be in accordance with Test Method Tex-404-A, except that the aggregate shall be tested in an oven-dry condition.

(c) Wear — The wear shall be not more than 35 percent when tested in accordance with Test Method Tex-410-A.

(d) Freeze-Thaw Test — The freeze-thaw loss shall not exceed 7 percent when tested in accordance with Test Method Tex-432-A.

(e) Potential Reactivity — Aggregate shall be innocuous when prepared and tested in accordance with ASTM Designation: C 289.

(f) Drying Shrinkage — The drying shrinkage of concrete specimens, prepared and tested in accordance with Test Method Tex-422-A shall not exceed 0.07 percent.

(g) Pressure Slaking Test — The pressure slaking value of the aggregate shall not exceed 6 percent when prepared and tested in accordance with Test Method Tex-431-A.

Tests (a) and (b), are field control tests. A minimum of one test per 60 cubic yards of lightweight aggregate will be required.

Tests (c), (d), (e), (f) and (g) are source qualification tests.

462.3 Fabrication. Forms for precast (machine-made) box culverts shall be made of steel. Forms for cast-in-place and precast (formed) box culverts may be either wood or steel. Forms shall be mortar-tight and of sufficient strength to prevent excessive bulging or misalignment of adjacent boxes. They shall be constructed to permit their removal without damage to the concrete. Offsets at form joints shall not exceed one-eighth of an inch. Forms shall be clean and free of extraneous matter when concrete is placed.

Positive means of supporting steel cages in place throughout forming and concrete placement will be required and subject to the approval of the Engineer. Welding of reinforcing steel will be permitted only where shown on the plans. Welding shall be done by a qualified welder in accordance with the requirements of the Item, "Structural Welding."

Precast (machine-made) box culverts shall be cast by a process which will provide for uniform placement of the concrete in the forms and compaction by mechanical devices which will assure dense concrete. Concrete shall be mixed in a central batch plant or other approved batching facility from which the quality and uniformity of the concrete can be assured. Ready-Mix concrete will not be acceptable for use in precast (machine-made) box culverts.

Curing of precast box culverts shall be by any one or a combination of the following methods:

(1) **Steam Curing.** Culvert sections will be placed in a curing chamber, free from outside drafts, and cured in a moist atmosphere maintained by the injection of steam for such time and at a temperature as necessary for proper curing. The curing chamber shall be constructed to allow full circulation of steam around the entire section. Steam outlets shall be positioned so that the live steam is not applied to the concrete.

(2) **Water Curing.** Culvert sections may be water-cured by covering with water saturated cotton mats, polyethylene sheeting or polyethylene burlap blankets, by a system of perforated pipe or mechanical sprinklers, by porous hose or by other methods that will keep the sections moist during the curing period. Water for curing shall be in accordance with the requirements of the Item, "Concrete for Structures".

(3) **Membrane Curing.** Type 1 membrane curing compound may be used for interim curing or for complete curing. All surfaces shall be kept moist prior to the application of the curing compound and shall be damp when the compound is applied.

When used for interim curing, the curing compound shall be applied to the outside surface of the section upon removal of forms. It shall also be applied to the inside surface or a suitable covering may be placed over the end opening to protect the inside of the section against rapid drying.

When used for complete curing, curing compound shall be applied to all surfaces of the section, but not later than 24 hours after casting.

Curing shall not be delayed longer than one hour after the concrete has been placed in the forms, nor more than one-half hour after removal of forms, unless interim curing is applied.

Precast box culverts (machine-made) shall be continuously cured for a minimum period of three curing days and until the design strength has been attained. Curing of precast box culverts may be interrupted for no more than 30 minutes for form removal, and no more than 4 hours for removal to a storage area and resumption of curing. Precast box culverts (machine-made) shall be protected from freezing during curing period.

A curing day is defined as a calendar day when the temperature, taken in the shade away from artificial heat, is above 50 F for at least 19 hours, or for colder days, if satisfactory provisions are made to maintain the temperature at all surfaces of the concrete above 50 F for the entire 24 hours.

Test cylinders shall be cured at the same time and in the same manner as the sections.

Not more than four lifting holes may be provided in each section to facilitate handling. They may be cast-in, cut into the fresh concrete after form removal, or drilled, and shall not be more than 2 inches in diameter or 2 inches square. Cutting or displacement of reinforcement will not be permitted. Spalled areas around the holes shall be repaired. Concrete box culverts shall be given an "Ordinary Surface Finish" in accordance with the Item, "Concrete Structures".

Precast box culverts of either type, made in a plant, shall bear the following marking:

(1) The name or trade mark of the manufacturer;

(2) The date of manufacture;

(3) When required elsewhere herein, a match mark for proper installation; and

(4) If lifting holes are not provided, one end of each section shall be clearly marked on the inside and outside walls to indicate the top and/or bottom as it will be installed.

Marking shall be indented into the culvert section or may be painted thereon with waterproof paint.

462.4. Testing. For testing of precast (machine-made) box culverts, a minimum of 4 test cylinders for design compressive strength shall be made for each day's production run of each size and class of culvert section. Strength tests for each production run will be based on the average strength of 2 cylinders which may be tested anytime after completion of the specified curing period. When design strength is attained on the initial test, further tests on that run will not be required. Should the initial test fail to meet the design strength, subsequent tests shall be made at 28 days unless additional test cylinders were made during production of that run. Failure to attain design compressive strength by the 28 day test will result in rejection of the run represented by the test. Equipment required for testing for precast (machine-made) box culverts shall be furnished by the fabricator. Cylinders for compressive strength tests shall be made in accordance with Test Method Tex-707-I.

Testing of precast (formed) culvert sections or cast-in-place culverts shall conform to Article 421.9.

462.5. Fabricating Tolerances. Tolerances for precast sections of either type shall conform to the following:

The inside vertical and horizontal dimensions shall not vary from plan requirements by more than ± one-half of an inch.

The horizontal or vertical plane at each end shall not vary from perpendicular by more than one-half of an inch, measured on the inside faces of the section.

The sides of a section at each end, shall not vary from being perpendicular to the top and bottom by more than one-half of an inch when measured diagonally between opposite interior corners of the end section.

The thickness of walls and slabs shall not be less than that required by the plans, except that an occasional deficiency not greater than one-quarter of an inch will be acceptable. If proper jointing is not affected, thicknesses in excess of plan requirements are acceptable.

The straightness of the tongue and groove, at the mating surface shall not vary by more than one-quarter of an inch.

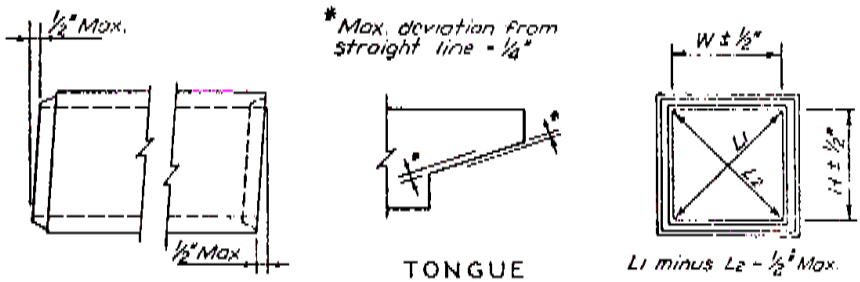

TOLERANCES

Deviations from the above tolerances will be acceptable if the sections can be fitted at the plant or job site and it is determined that an acceptable joint can be made. For this condition an acceptable joint is:

When two sections are fitted together on a flat surface, in proper alignment and in the position they will be installed, the longitudinal opening at any point shall not exceed one inch. Sections fitted together at the plant and accepted in this manner shall be match-marked for installation.

462.6. Defects and Repair. Fine cracks or checks on the surface of the member which do not extend to the plane of the nearest reinforcement will not be cause for rejection unless they are numerous and extensive. Cracks which extend into the plane of the reinforcing steel but are acceptable otherwise, shall be repaired in an approved manner.

Small damaged or honeycombed areas which are purely surface in nature may be repaired. Excessive damage, honeycomb or cracking will be subject to structural review. Repairs shall be sound, properly finished and cured in conformance with the pertinent specifications. When fine cracks or hairchecks on the surface indicate poor curing practices, further production of precast sections shall be discontinued until corrections are made and proper curing provided.

462.7. Storage and Shipment. Precast sections shall be stored on level blocking in a manner acceptable to the Engineer. No load shall be placed upon them until design strength is reached and curing completed. Shipment of sections may be made when the design strength and curing requirements have been met.

462.8. Construction Methods. Excavation and backfill shall be in accordance with the requirements of the Item, "Structural Excavation" or the Item, "Excavation and Backfill for Sewers", except where tunneling or jacking methods are required or permitted by the plans.

Precast concrete sections shall be bedded on a foundation of firm and stable material accurately shaped to conform to their base. When required by the plans, special bedding material shall be provided.

Unless otherwise shown on the plans, the Contractor may use any of the jointing materials, except rubber gaskets, and shall comply with the jointing requirements specified in the Item, "Reinforced Concrete Pipe Culverts".

When precast box culverts are used to form multiple barrel structures, they shall be placed in conformance with the details shown on the plans. Material to be used between barrels shall be as required on the plans.

Connections of precast sections to cast-in-place culverts or to any required headwalls, wingwalls, riprap or other structure shall conform to the details shown on the plans.

Lifting holes shall be filled with mortar or concrete and cured to the satisfaction of the Engineer.

462.9. Measurement. Concrete box culverts of each size and type shall be measured by the linear foot in place. The measurement will be the flow line length, along the centerline, between the ends of the culvert.

When concrete box culverts are used in multiple barrel structures, the measured length will be the sum of the lengths of all barrels measured as described above.

For the quantities measured under this item, adequate calculations have been made in accordance with Article 9.1. If no adjustment is required by Article 462.10, additional measurements or calculations will not be required.

Measurement required by a change in design will be computed as specified herein.

462.10. **Payment.** The quantity to be paid for, will be that quantity shown on the contract plans and in the proposal, regardless of errors in calculation, except as may be modified by the following:

(1) When the plan quantity for a complete single or multiple box structure is in error by 5 percent or more, a recalculation will be made and the corrected quantity included for payment. Quantities revised in this manner will not be subject to the provisions of Article 4.5.

(2) When quantities are revised by a change in design the 'plan quantity' will be increased or decreased by the amount involved in the design change. Quantities revised in this manner will be subject to the provisions of Article 4.5.

The party to the contract requesting the adjustment shall present to the other, two copies of the description and location, together with calculations of the quantity for the structure element involved. When this quantity is certified correct by the Engineer, it will become the revised plan quantity.

The unit price bid per linear foot for the various sizes and types of "Concrete Box Culvert", shall be full compensation in place for constructing, or furnishing and transporting sections; the preparation and shaping of bed; jointing of sections; for connections to existing structures; concrete, reinforcing steel and all other items of material, labor and equipment, tools and incidentals necessary to complete the work in accordance with the plans and specifications except excavation and backfill, which shall be in accordance with the Item, "Structural Excavation", or the Item, "Sewer Excavation". When sections are laid on a skew, full compensation for cutting the ends when required by the plans, shall be included in the unit price bid per linear foot, measured in accordance with Article 462.9.

ITEM 463

LONG SPAN STRUCTURAL PLATE STRUCTURES

463.1. Description. This item shall govern for furnishing and installing long span structures in accordance with these specifications and the details shown on the plans. Unless otherwise shown on the plans, the structure(s) may be of steel or aluminum.

The plans will designate the shape, the span and rise, the minimum gage of metal, footing design if required, two types of longitudinal stiffener designs for steel structures, either of which may be used, and a transverse stiffener design for steel or aluminum structures when appropriate.

463.2. Materials. The materials for steel and aluminum long span structures shall conform to the Item, "Structural Plate Structures".

The material for metal headwalls shall comply with requirements shown on the plans.

Concrete and reinforcing steel shall conform to the Items, "Concrete for Structures", and "Reinforcing Steel". Unless otherwise shown on the plans, concrete for footings and headwalls shall be Class "A". Concrete for longitudinal stiffeners (thrust beams) shall be Class "B" and shall be reinforced in accordance with the plans. Riprap for slope protection and for invert paving, when required, shall be Class "B" concrete, with reinforcement as specified on the plans, and shall conform to the requirements of the Item, "Riprap". Concrete will not be required in metal longitudinal stiffeners.

Material for membrane curing shall conform to the Item, "Membrane Curing".

463.3. Designation of Type and Size. The type and size of structures will be indicated on the plans by one of the following descriptions:

Horizontal Ellipse (Galv. Steel) (span x rise)
Horizontal Ellipse (Alum.) (span x rise)
Low Profile Arch (Galv. Steel) (span x rise)
Low Profile Arch (Alum.) (span x rise)
High Profile Arch (Galv. Steel) (span x rise)
High Profile Arch (Alum.) (span x rise)
Inverted Pear (Galv. Steel) (span x rise)
Inverted Pear (Alum.) (span x rise)
Pipe Arch (Galv. Steel) (span x rise)
Pipe Arch (Alum.) (span x rise)

When designated as one of the above types and sizes without the material being shown, such as;

Horizontal Ellipse (span x rise)
Low Profile Arch (span x rise)
High Profile Arch (span x rise)
Inverted Pear (span x rise)
Pipe Arch (span x rise)

the Contractor may furnish the structure in either galvanized steel or aluminum.

463.4. Construction Methods.

(1) Excavation. Structural excavation and backfill shall be done in accordance with the requirements of the Item, "Structural Excavation" and the additional requirements herein.

The excavation will be of sufficient width to provide ample working space for erection and proper compaction of backfill and bedding material. The Contractor shall provide adequate drainage of the cut and bedding during the construction operation.

If the quality of the native soil is as good or better than the proposed backfill material, excavation shall be to the limits set forth in the Item, "Structural Excavation". If the quality of the native soil is less than that of the proposed backfill material, the excavation shall extend, from each side of the barrel, a minimum horizontal distance of one-half the span or two-thirds of the rise, whichever is greater.

When a horizontal ellipse or other shape with metal invert is specified, the structure shall be placed on a shaped bed of select granular material so that a slightly yielding cushion is formed under the bottom plates with the fill material under the haunches being well compacted.

Concrete footings when required for long span structures shall be placed entirely on either rock or firm soil. When the footing area is partially rock and partially soil, the rock shall be removed below grade and replaced with suitable materials so that a slightly yielding, compacted earth cushion is provided below the footing for a minimum of 12 inches.

The distance between multiple structures shall be as shown on the plans.

(2) Erection and Shape Control. Erection of long span structural plate structures shall be in accordance with the Item, "Structural Plate Structures," and with this Item. Lateral ties, struts and/or falsework may be required on some structures to maintain proper shape and alignment during the erection and backfill operations.

Monitoring of the structure shape throughout erection and backfill requires careful observations of the symmetry and uniform curvature of the periphery of the structure. If there is any tendency toward loss of symmetry in shape or loss of curvature in the structure periphery, even though the structure is within the tolerances stated herein, construction involving the structure shall cease until a proper course of action is established.

The Contractor shall furnish acceptable devices for monitoring the horizontal and vertical shape of the structure(s). A minimum of 5 monitoring devices shall be furnished at transverse sections, with one at each longitudinal stiffener, one at the top of the structure, and one at each mid span of the top arc. These shall be installed at each end, and as a minimum, on 24 foot increments for the entire structure length.

For the shape factor furnished (shape factor = Rt/Rs, when Rt is the radius of the top arc and Rs is the radius of the side arc), unless otherwise shown on the plans, the allowable sag from design shape, during erection, as a percentage of the rise shall not exceed:

Shape factor of up to 2.74,	4%
Shape factor 2.75 through 3.24,	2%
and Shape factor 3.25 and greater	1%

Shape shall be checked at least after each two, one foot compacted lifts of backfill, with the upward movement of the top of the structure during backfilling, not to exceed 2 percent of the rise, not more than 50% loss of the midordinate of the side plates, nor more than 25% deviation of any midordinate of the top plates, all measured from the design shape. Selective top loading of the structure may sometimes be required to prevent distortion in excess of tolerances given herein.

(3) **Backfilling**. Backfilling is a critical phase of construction of long span structures and strict adherence to the specified construction and backfill procedures is required. The backfill material to be used adjacent to and over the structure to the minimum required cover (as shown on the plans) shall be a select granular type material such as:

a. a well graded sand and gravel, preferably sharp, rough or angular if possible, or

b. a uniform sand or gravel.

Plastic soils will not be permitted. The structure backfill material shall conform to one of the following soil classifications as follows and as defined in Table 1:

1. For height of fill less than 12 feet, A-1, A-3, A-2-4 and A-2-5 may be used.
2. For height of fill of 12 feet and more, A-1 and A-3 may be used.

General Classification	Granular Materials (35% or less passing No. 200)				
	A-1		A-3	A-2	
Group Classification	A-1-a	A-1-b	A-3	A-2-4	A-2-5
Sieve Analysis, Percent Passing:					
(No. 10)	50 max.		--	--	
(No. 40)	30 max.	50 max.	51 min.	--	
(No. 200)	15 max.	25 max.	10 max.	35 max.	35 max.
Characteristics of Fraction Passing 0.425 mm (No. 40)					
Liquid Limit	--		--	40 max.	41 min.
Plasticity index	6 max.		N.P.	10 max.	10 max.
Usual Types of Significant Constituent Materials	Stone Fragments, Gravel and Sand		Fine Sand	Silty or Clayey Gravel and Sand	

Table 1

CLASSIFICATION OF SOILS AND SOIL-AGGREGATE MIXTURES

The backfill material shall be compacted to 90 percent density as determined by Test Method Tex-114-E at optimum moisture content. It may not be possible to develop this compacted density in the first lift of material over the top arc (Phase 2) due to the influence of the flexible structure; therefore, density in at least the first lift over the top arc (Phase 2) will be the highest density attainable using equipment authorized herein.

The backfill pattern and sequence, up to at least the depth of minimum required cover, shall be in three phases as shown in Figure 1.

The first phase of the backfill operation will be to backfill under the haunches and/or along the sidewalls of the structure. Backfill material will be placed in maximum 8-inch horizontal layers simultaneously along each side of the structure until the height of backfill has reached the top of the longitudinal stiffeners, or that longitudinal seam (edge of structure crown) where the top arc plates connect to the side arc plates.

The second phase will be to work simultaneously symmetrically from both sides of the structure with light track type equipment pushing material over the crown until three 12 inch layers of backfill have been placed and compacted uniformly over the crown. The light track type equipment shall not exceed 20,000 pounds gross weight with a track pressure less than 1700 pounds per square foot.

After the crown has been uniformly covered, Phase three will be to continue to place horizontal layers of backfill (maximum 12″ layers, compacted) which extend laterally from the crown and compact over the crown and at the sides of the structure using hand-operated or light tractor drawn

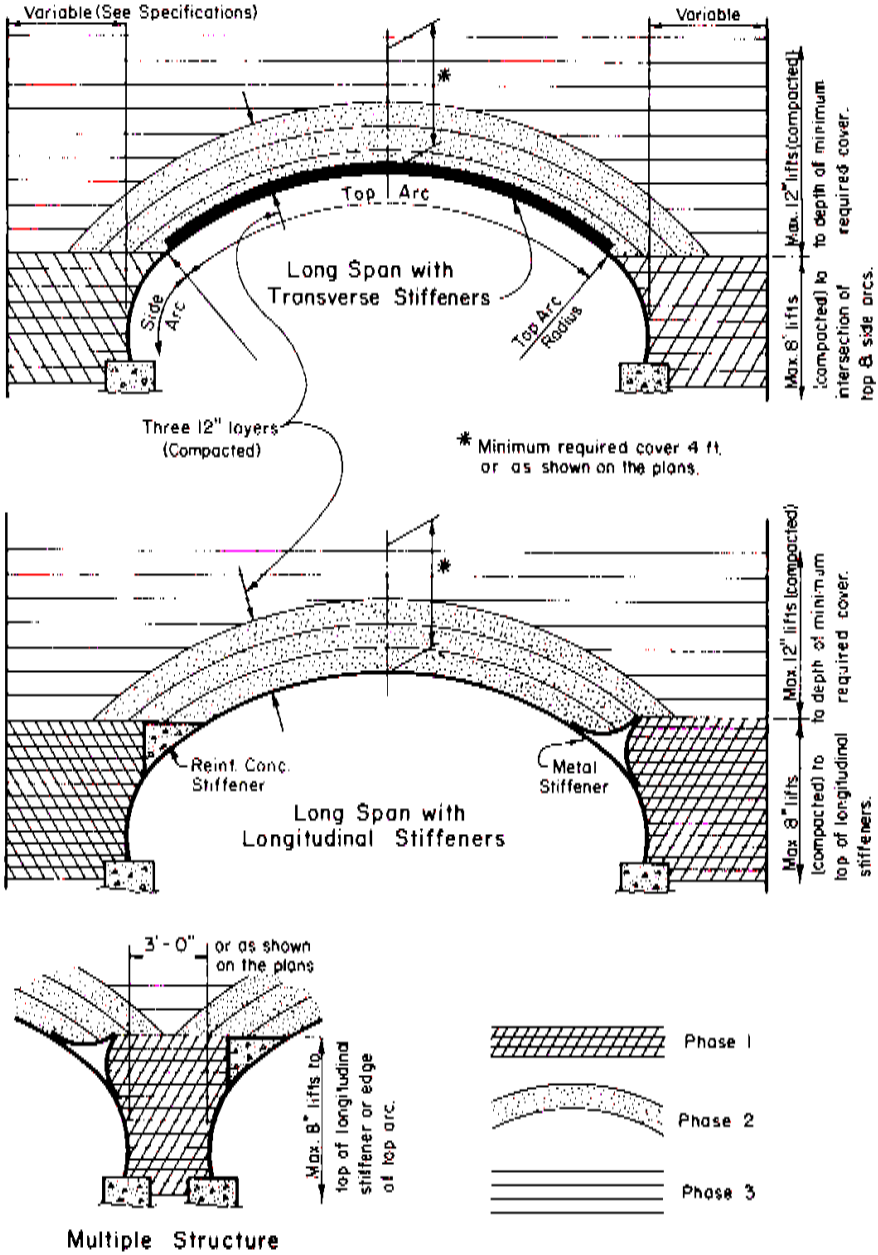
Variable (See Specifications)
Variable
Top Arc
Long Span with
Transverse Stiffeners
Side Arc
Top Arc Radius
Max. 12" lifts (compacted) to depth of minimum required cover.
Max. 8" lifts (compacted) to intersection of top & side arcs.
Three 12" layers (Compacted)
* Minimum required cover 4 ft. or as shown on the plans.
Reinf. Conc. Stiffener
Metal Stiffener
Long Span with
Longitudinal Stiffeners
Max. 12" lifts (compacted) to depth of minimum required cover.
Max. 8" lifts (compacted) to top of longitudinal stiffeners.
3'-0" or as shown on the plans
Max. 8" lifts to top of longitudinal stiffener or edge of top arc.
Multiple Structure
Phase 1
Phase 2
Phase 3

Fig. 1

compaction equipment working at the same time on each side of the structure at the same longitudinal location, until at least the minimum required depth of cover is attained. Wheel type equipment will not be allowed over the crown of the structure until Phase 3 is complete. For multiple structures the same backfill phases will be performed for all structures more or less simultaneously. Backfilling between the barrels will usually require that the material be placed with a crane and bucket or other suitable equipment. Backfill material shall not be dropped from a height, or concentrated in such an amount prior to distribution over the top arc, that damage to the flexible structure will result. Compaction of this backfill shall be with hand operated tampers or other acceptable equipment.

Any damage to the structure caused by equipment and/or backfill procedures not in compliance with this specification, shall be corrected or replaced to the Department's satisfaction at the entire expense of the Contractor.

(4) **Concrete.** Curing of all concrete shall be in accordance with the Item, "Concrete Structures". Membrane curing will be permitted. Concrete used in longitudinal stiffeners shall be a minimum of three days of age before backfilling against or over the stiffener can be done.

463.5. Measurement. Long span structural plate structures of each size and type specified will be measured by the linear foot of each individual structure (each separate structure in case of multiple installations), measured along the structure centerline as installed, as the average length of the top and bottom centerline lengths.

Metal headwalls of each size and type will be measured by the square foot of the actual area of the headwall in place.

Unless otherwise noted on the plans, concrete for any required headwalls will be measured by the cubic yard in accordance with the Item, "Concrete for Structures".

Unless otherwise noted on the plans reinforcing steel for any required headwalls will be measured by the pound in accordance with the Item, "Reinforcing Steel."

Concrete riprap, including reinforcement, will be measured by the cubic yard in accordance with the Item, "Riprap".

Structural excavation will be measured by the cubic yard in accordance with the Item, "Structural Excavation".

Concrete, reinforcing steel and/or metal for longitudinal or transverse stiffeners, for foundations and/or for backfill between multiple structures, if required by the plans, will not be measured for payment.

463.6. Payment. Payment for long span structural plate structures, measured as prescribed above, shall be made at the unit price bid per linear foot for the various sizes and types required.

Payment for metal headwalls, measured as prescribed above, shall be made at the unit price bid per square foot of metal headwall.

Payment for concrete for headwalls, measured as prescribed above, shall be made at the unit price bid per cubic yard of the class of concrete specified for headwalls in accordance with the Item, "Concrete for Structures".

Reinforcing steel for headwalls, measured as prescribed above, shall be paid for at the unit price bid per pound in accordance with the Item, "Reinforcing Steel".

Concrete riprap, including reinforcement, measured as prescribed above, will be paid for at the unit price bid per cubic yard in accordance with the Item, "Riprap".

Payment for structural excavation, measured as prescribed above, shall be at the unit price bid per cubic yard in accordance with the Item, "Structural Excavation".

This payment shall be full compensation for furnishing, transporting, and erecting the metal structure; for constructing foundations; for handling and placing and compacting of backfill material; for all bolts, nuts, washers, hook bolts, anchor channels or angles; for longitudinal stiffeners, for tranverse stiffeners when required, for furnishing alignment control devices; for concrete, reinforcing steel and all other items of material, labor, equipment, tools and incidentals necessary to complete the various installations.

ITEM 464

REINFORCED CONCRETE PIPE CULVERTS

464.1. Description. This item shall govern for the furnishing and placing of reinforced concrete pipe culverts and for the material and incidental construction requirements for reinforced concrete pipe sewers. The culvert pipe shall be installed in accordance with the requirements of these specifications, to the lines and grades shown on the plans, and shall be of the classes, sizes and dimensions shown thereon. The installation of pipe shall include all joints or connections to new or existing pipe, headwalls, etc., as may be required to complete the work. The location of private driveway and side road pipe may be varied as deemed necessary by the Engineer.

464.2. Materials.

(1) **General.** Except as modified herein, materials, manufacture and design of pipe shall conform to ASTM Designation: C76 or C655 for circular pipe; ASTM Designation: C506 for arch pipe, or ASTM Designation: C507 for elliptical pipe. All pipe shall be machine made or cast by a process which will provide for uniform placement of the concrete in the form and compaction by mechanical devices which will assure a dense concrete. Concrete shall be mixed in a central batch plant or other approved batching facility from which the quality and uniformity of the concrete can be assured. Transit mixed concrete will not be acceptable for use in precast concrete pipe.

Unless otherwise shown on the plans, not more than two holes may be placed in the top section of pipe for lifting and placing. The holes may be cast, cut, or drilled in the wall of the pipe. The holes shall not exceed 3 inches in diameter at the inside surface of the pipe wall. Not more than one longitudinal wire or two circumferential wires may be cut per layer of reinforcing steel when locating lift holes in the pipe wall. After the pipe is in place, lift holes shall be filled with concrete or mortar to the satisfaction of the Engineer.

(2) **Design.** Circular pipe shall be of the class or D-Load specified on the plans. Regardless of the design specified, the Contractor may furnish pipe to either C-76 or C-655 specification. For concrete pipe arch or elliptical pipe, the minimum design shall conform to Table A or B.

Design Size	Equiv. Dia. In.	Rise In.	Span In.
1	18	13 1/2	22
2	21	15 1/2	26
3	24	18	28 1/2
4	30	22 1/2	36 1/4
5	36	26 5/8	43 3/4
6	42	31 5/16	51 1/8
7	48	36	58 1/2
8	54	40	65
9	60	45	73
10	72	54	88

TABLE A*
Arch Pipe

Design Size	Equiv. Dia. In.	Rise In.	Span In.
1	18	14	23
2	24	19	30
3	27	22	34
4	30	24	38
5	33	27	42
6	36	29	45
7	39	32	49
8	42	34	53
9	48	38	60
10	54	43	68

TABLE B*
Horizontal Elliptical Pipe

*Minimum height of cover required is 2 feet.
*Maximum height of cover is 8 feet.
*Minimum required D load design is 1350-D (Class III).

The plans will provide a summary indicating the locations and length for all pipe. In addition, the diameter, required D-load and/or class for full circle pipe, and/or the design size for pipe arch or elliptical pipe will also be shown.

(3) **Physical Test Requirements.** The acceptability of the pipe shall be determined by the results of the physical tests outlined herein; by appropriate material tests required in ASTM Designations: C76, C506, C507, or C655; by absorption tests on selected samples from the wall of the pipe; and by inspection of the finished pipe to determine its conformance with the required design and its freedom from defects. Three-Edge Bearing tests shall be performed on one pipe for each 100 pipe or fraction thereof of each type, size, class or D-load for the load to produce a 0.01 inch crack and, at the discretion of the Engineer, the ultimate load. Pipe which has been tested only to the formation of 0.01 inch crack shall be marked "TEST" and accepted for use.

As an alternate to the Three-Edge Bearing test, concrete pipe 60 inches in diameter and larger may be accepted on the basis of compressive strength of cores cut from the wall of the pipe. The Manufacturer shall furnish facilities and personnel for taking the cores and determining the compressive strength of the samples. Three-Edge Bearing tests and core tests shall be in accordance with ASTM Designation: C497. The Manufacturer shall plug and seal coreholes in the pipe wall, after testing, in a manner satisfactory to the Engineer.

When testing pipe with lift holes the pipe will be positioned in the test machine with the lift holes on top.

(4) **Sizes and Permissible Variations.**

(a) Variations in diameter, size, shape, wall thickness, reinforcement, placement of reinforcement, laying length and the permissible underrun of length shall be in accordance with the applicable ASTM Specification for each type of pipe as referred to previously.

(b) Where rubber gasket pipe joints are to be used, the Design of the Joints and Permissible Variations in Dimensions shall be in accordance with ASTM Designation: C443.

(5) **Workmanship and Finish.** Pipe shall be substantially free from fractures, large or deep cracks and surface roughness. The ends of the pipe shall be normal to the walls and centerline of the pipe within the limits of variations allowed under Subarticle 464.2.(4).(a) herein.

(6) **Curing.** Pipe shall be cured in accordance with the applicable ASTM Specification for each type of pipe as referred to herein.

(7) **Marking.** The following information shall be clearly marked on each section of pipe:

(a) The class or D-load of pipe.

(b) The date of manufacture.

(c) The name or trade mark of the manufacturer.

(d) One end of each section of pipe with elliptical reinforcement shall be clearly marked during the process of manufacture or immediately thereafter on the inside and the outside of opposite walls to show the location of the "top" or "bottom" of the pipe as it should be installed, unless the external shape of the pipe is such that the correct position of the top and bottom is obvious. Marking shall be indented on the pipe section or painted thereon with waterproof paint.

(8) **Minimum Age for Shipment.** Pipe shall be considered ready for shipment when it conforms to the requirements of the tests specified herein.

(9) **Inspection.** The quality of materials, the process of manufacture, and the finished pipe shall be subject to inspection and approval by the Engineer at the pipe manufacturing plant. In addition, the finished pipe shall be subject to further inspection by the Engineer at the project site prior to and during installation.

(10) **Causes for Rejection.** Pipe shall be subject to rejection for failure to conform to any of the specification requirements. Individual sections of pipe may be rejected because of any of the following:

(a) Fractures or cracks passing through the shell, except for a single end crack that does not exceed the depth of the joint.

(b) Defects that indicate imperfect proportioning, mixing and molding.

(c) Surface defects indicating honeycombed or open texture.

(d) Damaged ends, where such damage would prevent making a satisfactory joint.

(11) **Repairs.** Pipe may be repaired if necessary, because of occasional imperfections in manufacture or accidental injury during handling and will be acceptable if, in the opinion of the Engineer, the repairs are sound and properly finished and cured and the repaired pipe conforms to the requirements of the specifications.

(12) **Rejections.** All rejected pipe shall be plainly marked by the Engineer and shall be replaced by the Contractor with pipe which meets the requirements of these specifications. Such rejected pipe shall be removed immediately from the site of work.

(13) Jointing Materials. Unless otherwise specified on the plans the Contractor shall have the option of making the joints using any of the following materials:

(a) Mortar. Mortar for joints shall be in accordance with the section, "Jointing", of this Item.

(b) Cold Applied, Plastic Asphalt Sewer Joint Compound. This material shall be suitable for jointing concrete pipe. It shall consist essentially of natural and/or processed asphalt base, suitable volatile solvents, and inert filler, a portion of which shall be asbestos fiber. The consistency is to be such that the ends of the pipe can be coated with a layer of the compound up to one-half inch thick by means of a trowel. It shall cure to a firm, stiff plastic condition after application. The material shall be of a uniform mixture and any small separation occurring in the container before use must be readily stirred back to form a uniform mix.

This material shall meet the following requirements when tested according to Test Method Tex-526-C:

Asphalt Base, 100-(% Volatiles + % Ash), % by wt	28-45
Volatiles by 212 F Evaporation, 24 hrs, % by wt	10-26
Mineral Matter determined as Ash, % by wt	30-55
Consistency, Cone Penetration, 150 g, 5 sec, 77 F	150-275

(c) Rubber Gaskets. These gaskets shall conform to ASTM Designation: C361 or C443, with the provision that the Contractor shall furnish the Engineer the Manufacturer's Certificate of Analysis.

(d) Cold Applied Preformed Plastic Gaskets. This material shall be suitable for sealing joints of tongue and groove concrete pipe. The gasket sealing the joint shall be produced from blends of refined hydrocarbon resins and plasticizing compounds reinforced with inert mineral filler and shall contain no solvents, irritating fumes or obnoxious odors. The gasket joint sealer shall not depend on oxidizing, evaporating, or chemical action for its adhesive or cohesive strength, and shall be supplied in extruded rope-form of suitable cross-section. The size of the plastic gasket joint sealer shall be in accordance with the manufacturer's recommendations and sufficient to obtain the squeeze-out as described under Article 464.3. The gasket joint sealer shall be protected by a suitable wrapper so designed that when removed at the proper time, the jointing material will maintain its integrity.

The chemical composition of the gasket joint sealing compound as shipped shall meet the following requirements when tested in accordance with the test methods shown:

Composition	Test Method	Typical Analysis
Bitumen (Petroleum Plastic content) (% by weight)	ASTM D-4	50 — 70
Ash-Inert Mineral Matter (% by weight)	Tex — 526-C	30 — 50
Volatile Matter (@ 325 F) (% by weight)	Tex — 506-C	2.0 Max.

The gasket joint sealing compound when immersed for 30 days at ambient room temperature separately in 5 percent solution of caustic potash, a mixture of 5 percent by hydrochloric acid, a 5 percent solution of sulfuric acid, and a saturated H_2S solution shall show no visible deterioration.

The physical properties of the gasket joint sealing compound as shipped shall meet the following requirements:

Property	Test Method	Typical Analysis	
Specific Gravity @ 77 F	ASTM D-71	1.20 Min	1.35 Max
Ductility @ 77 F (cm) Min	Tex — 503-C	5.0 Min	
Softening point	Tex — 505-C	275 F Min	
Penetration			
32 F (300 g) 60 Sec	Tex — 502-C	75 Min	
77 F (150 g) 5 Sec	Tex — 502-C	50 Min	120 Max
115 F (150 g) 5 Sec	Tex — 502-C		150 Max
Flashpoint C.O.C. F	Tex — 504-C	600F	
Fire Point C.O.C. F	Tex — 504-C	625F	

(e) For jointing materials (b), (c) and (d) as described above, the Contractor shall furnish the Engineer the Manufacturer's Certificate of Compliance.

464.3. Construction Methods. Reinforced concrete pipe culverts shall be constructed from the specified materials in accordance with the following methods and procedure:

(1) Excavation. All excavation shall be in accordance with the requirements of the Item, "Structural Excavation", except where tunneling or jacking methods are shown on the plans or permitted by the Engineer. When pipe is placed in a trench, the Contractor shall make such provisions as required to insure adequate drainage of the trench to protect the bedding during construction operations.

(2) Bedding. Bedding shall be in accordance with Class C Bedding unless the bedding classification is otherwise specified on the plans. The various classes of bedding shall be prepared as follows:

(a) Class A (Concrete Cradle) Bedding. In this class of bedding the lower part of the pipe exterior, as shown in Figure 1, shall be bedded in a continuous cradle constructed of Class B concrete, in accordance with the

Item, "Concrete for Structures", having a minimum thickness under the pipe of one fourth the nominal inside diameter or a thickness of 6 inches whichever is less, and extending up the sides of the pipe for a height equal to one fourth of the outside diameter. The cradle shall have a width at least equal to the outside diameter of the pipe plus 8 inches and shall be constructed monolithically without horizontal construction joints. The pipe shall be placed in the concrete cradle before the concrete has taken its initial set.

(b) **Class B Bedding.** The pipe shall be bedded, as shown in Figure 2, on fine granular materials over an earth foundation, accurately shaped by means of a template to fit the lower part of the pipe exterior for at least 15 percent of its overall height. Selected materials from excavation or borrow shall then be placed along both sides of the pipe equally in layers not more than 6 inches thick and compacted by mechanical tamps or rammers for the remainder of the lower 30 percent of the overall height of the pipe.

(c) **Class C Bedding.** The pipe shall be bedded, as shown in Figure 3, in a foundation of stable earth material accurately shaped to fit the lower part of the pipe exterior for at least 10 percent of its overall height. The Engineer may require use of a template if necessary to secure reasonably accurate shaping of the foundation material.

(d) **Rock or Other Incompressible Foundation.** Where ledge rock, rocky or gravelly soil, hard pan, or other unyielding material is encountered at the structure site, such materials shall be removed prior to bedding the pipe. Where Class A bedding is specified, these materials shall be excavated to the bottom of the concrete cradle. Where Class B or Class C bedding is specified, the hard materials shall be excavated as illustrated in Figure 4 for a minimum of 8 inches below the bottom of the pipe or one half of an inch for each foot of fill over the top of the pipe, whichever is greater, but not more than three fourths of the nominal diameter of the pipe. The width of the excavation shall be one foot greater than the outside diameter of the pipe. It shall be replaced with suitable granular materials and lightly compacted and shaped as required for the specified class of bedding.

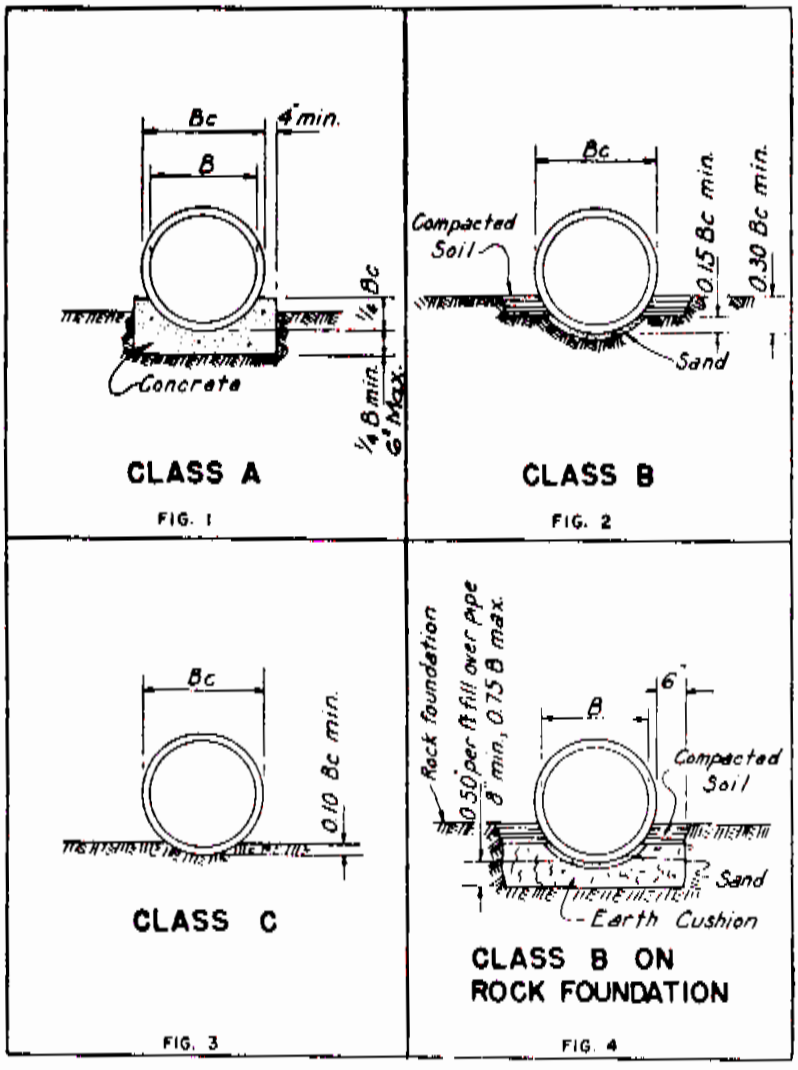

(e) **Unstable Materials.** Where the soil encountered at the established grade is quicksand, muck, or similar unstable material, unless special construction methods are called for on the plans or in the special provisions, such unstable soil shall be removed and replaced in accordance with the requirements of the Item, "Structural Excavation".

(f) **Flat Bottom Pipe.** If the pipe is shaped such that the bottom is flat for a width equal to at least 40 percent of its external diameter, the circular shaping of the trench as required for Class B and Class C bedding will not be required and the pipe may be bedded on sand (Class B) or on natural earth (Class C) which has been shaped flat to receive the pipe, with uniform bearing under the entire length of each joint. For Class B bedding the sand cushion shall extend a minimum of 6 inches on each side beyond the flat bottom.

(3) **Laying Pipe.** Unless otherwise authorized by the Engineer, the laying of pipe on the prepared foundation shall be started at the outlet end with the spigot or tongue end pointing downstream and shall proceed toward the inlet end with the abutting sections properly matched, true to the established lines and grades. Where bell and spigot pipe are used, cross trenches shall be cut in the foundation to allow the barrel of the pipe to rest firmly upon the prepared bed. These cross trenches shall be not more than two inches larger than the bell ends of the pipe. Proper facilities shall be provided for hoisting and lowering the sections of pipe into the trench without disturbing the prepared foundation and the sides of the trench. The ends of the pipe shall be carefully cleaned before the pipe is placed. As each length of pipe is laid, the mouth of the pipe shall be protected to prevent the entrance of earth or bedding material. The pipe shall be fitted and matched so that when laid in the bed it shall form a smooth, uniform conduit. When elliptical pipe with circular reinforcing or circular pipe with elliptical reinforcing is used, the pipe shall be laid in the trench in such position that the markings "Top" or "Bottom", shall not be more than 5 degrees from the vertical plane through the longitudinal axis of the pipe.

Multiple installations of reinforced concrete pipe shall be laid with the center lines of individual barrels parallel. When not otherwise indicated on plans, the following clear distances between outer surfaces of adjacent pipe shall be used.

Diameter of Pipe	18"	24"	30"	36"	42"	48"	54"	60" to 84"
Clear Distance Between Pipes	0'-9"	0'-11"	1'-1"	1'-3"	1'-5"	1'-7"	1'-11"	2'-0"

(4) **Jointing.**

(a) Joints sealed with Portland cement mortar shall be made as follows:

Mortar shall consist of one part cement, two parts sand and sufficient water to make a plastic mix. The pipe ends shall be cleaned and wetted before making the joint. The lower half of the bell or groove and the upper half of the tongue or spigot shall be plastered with mortar. After the pipes are mated and pulled or pushed up tight, mortar shall be packed into the joint from both inside and outside the pipe. The inside shall be finished smooth and flush with adjacent joints of pipe. Over the joint outside the pipe, a bead shall

be formed at least one inch on either side of the joint and of semicircular cross section for tongue and groove joints, but for bell and spigot joints, the mortar shall form a 45° fillet between the outer edge of the bell and the spigot. Mortar joints shall be cured by keeping them wet for at least 48 hours or until the backfill has been completed, whichever comes first. No jointing shall be done when the atmospheric temperature is at or below 40 F. Mortared joints shall be protected against freezing for at least 24 hours.

At the Contractor's option, and with the approval of the Engineer, for pipes which are large enough for a man to enter, pipe may be furnished with the groove not less than one-half of an inch and not more than three-fourths of an inch longer than the tongue. Such pipe may be laid without mortar joints and backfilled. Care shall be exercised to avoid displacing the joints during the backfilling operations. After the backfilling has been completed, the space between the end of the tongue and the groove shall be cleaned of all foreign material, thoroughly wetted and filled with mortar around the entire circumference of the pipe and finished flush.

The Contractor shall make available for the use of the Engineer an appropriate rolling device similar to an automobile mechanic's "Creeper" for conveyance through the small size pipe structures.

No mortar banding on the outside of pipe will be required for side drain culverts. No joint material will be required for temporary culverts.

Mortar joints will be required for irrigation wells, vents and similar vertical structures.

(b) Joints using Cold Applied, Plastic Asphalt Sewer joint compound shall be made as follows:

Both ends of the pipes shall be clean and dry and shall be coated with a suitable primer of the type recommended by the manufacturer. After the pipe has been set to proper line and grade in the trench, a one-half of an inch thick layer of the compound shall be troweled or otherwise placed on the groove end of the pipe covering not less than two-thirds of the joint face around the entire circumference. Next the tongue end of the next pipe shall be shoved home with sufficient pressure to make a tight joint. After the joint is made any excess mastic projecting into the pipe shall be removed. Backfilling of pipe laid with asphalt mastic joints may proceed as soon as the joint has been inspected and approved by the Engineer. Special precautions shall be taken in placing and compacting backfill to avoid damage to the joints.

(c) Joints using Rubber Gaskets shall be made as follows:

Where rubber gasket pipe joints are required by the plans the joint assembly shall be made according to the recommendations of the gasket manufacturer. Water tight joints will be required when using rubber gaskets. Backfilling may begin when approved by the Engineer.

(d) Joints using Cold Applied Preformed Plastic Gaskets shall be made as follows:

Before laying the pipe in the trench, the plastic gasket shall be attached around the tongue or groove near the shoulder or hub of each joint. The protective wrapper shall be removed at the proper time so that the gasket may be pressed firmly to the clean, dry surface of the pipe. The joint sealer must be placed in such a manner that no dirt or other deleterious materials will come in contact with the joint sealing material.

After the tongue is correctly aligned with the flare of the groove, the wrapper or wrappers on the gasket shall be removed and the pipe shall be pulled or pushed home with sufficient force to cause evidence of squeeze-out of the gasket material on the inside or outside around the complete pipe joint circumference. Any joint material pushed out into the interior of the pipe that would tend to obstruct the flow shall be removed. (Pipe shall be pulled home in a straight line with all parts of the pipe on line and grade at all times.) Backfilling of pipe laid with plastic gasket joints may proceed as soon as the joint has been inspected and approved by the Engineer. Special precautions shall be taken in placing and compacting backfill to avoid damage to the joints.

When the atmospheric temperature is below 60 F, plastic joint seal gaskets shall either be stored in an area warmed to above 70 F, or artificially warmed to this temperature in a manner satisfactory to the Engineer. Gaskets shall then be applied to pipe joints immediately prior to placing pipe in trench, followed by connection to previously laid pipe.

(5) **Backfilling**. After the pipe has been placed, bedded and jointed as specified, filling and/or backfilling shall be done in accordance with the applicable requirements of the Item, "Structural Excavation". When mortar joints are specified, no fill or backfill shall be placed until the jointing material has been cured for at least six hours. Special precautions shall be taken in placing and compacting the backfill to avoid any movement of the pipe or damage to the joints. For side drain culverts and all other culverts where joints consist of materials other than mortar, immediate backfilling will be permitted.

(6) **Reuse of Headwalls and Aprons.** When existing headwalls are specified on the plans for reuse, the portion to be reused shall be severed from the culvert and moved to the new position previously prepared by hoisting with a crane, rolling, or other approved methods. Connections shall conform to the requirements for joining sections of pipes as designated herein or as shown on the plans. Any portion of the headwalls or pipe attached to headwall damaged during the moving operations by the Contractor shall be restored to its original condition at his entire expense. The Contractor, if he so desires, may remove and dispose of the existing headwalls and construct new headwalls at his expense in accordance with the pertinent specifications and design indicated on the plans or as furnished by the Engineer.

(7) **Protection of Pipe.** Unless otherwise shown on the plans or permitted in writing by the Engineer, no heavy earth moving equipment will be permitted to haul over the structure until a minimum of 4 feet of permanent or temporary, compacted fill has been placed thereon. Pipe damaged by the Contractor's equipment shall be removed and replaced by the Contractor at no additional cost to the State.

464.4. Measurement. Reinforced concrete pipe will be measured by the linear foot. Such measurement will be made between the ends of the pipe barrel along its flow line. Where spurs or branches, or connections to existing pipe lines are involved, measurement of the spur or new connecting pipe will be made from the intersection of its central axis with the outside surfaces of the pipe into which it connects. Where inlets, headwalls, catch basins, manholes, junction chambers, or other structures are included in lines of pipe, that length of pipe tying into the structure wall will be included for measurement but no other portion of the structure length or width will be so included.

For multiple pipes, the measured length will be the sum of the lengths of the barrels measured as prescribed above.

When actual field measurement is required by Article 464.5., measurement will be made by the linear foot of pipe in place as prescribed above. If no adjustment as required under Article 464.5. is necessary, no additional measurement or calculation will be made.

In the event of a change in design which either increases or decreases the quantity of pipe, the variation in quantity will be based on revised plan dimensions and the quantity shown on the plans and in the proposal will be increased or decreased as the case may be.

464.5. Payment. Payment for concrete pipe measured as prescribed above will be made at the contract unit price bid for the various sizes of "Reinforced Concrete Pipe", "Reinforced Concrete Pipe, Arch" and "Reinforced Concrete Pipe, Elliptical" of the D-load or class specified.

The quantity to be paid for will be that quantity shown on the contract plans and in the proposal, except as may be modified by the following:

Either party to the contract may request an adjustment of the quantities shown on the contract plans (by each separate bid item) if the quantities, measured as outlined in Article 464.4., vary from those shown on the contract plans by more than 5 percent.

The party to the contract which requests an adjustment shall present, to the other, two copies of field measurements and calculations showing the revised length for the structure or structures in question. These revised lengths of pipe when proven correct, together with all other pipe under the same bid item, shall constitute the final quantity for which payment will be made. Quantities revised in this manner will not be subject to the provisions of Article 4.5.

Payment for revised quantities due to a change in design will be paid for at the unit price bid per linear foot measured as provided in Article 464.4. Quantities revised in this manner will be subject to the provisions of Article 4.5.

Payment shall be full compensation for furnishing and transporting the pipe; hauling and placing of earth cushion material where required for bedding pipe in rock excavation; for the preparation and shaping of beds; for hauling, placing and jointing of pipes; for end finish; for moving and reusing headwalls; for all connections to existing structures and for all other items of materials, labor, equipment, tools, and incidentals necessary to complete the culvert or storm sewer in accordance with the plans and these specifications, except excavation and backfill, which will be paid for in accordance with the Item, "Structural Excavation". The excavation of rock or other incompressible materials, as may be required by Subarticle 464.3.(2).(d). will be measured and paid for as "Structural Excavation". Where pipes are laid on a skew, or where pipe ends are cut to fill slope, full compensation for cutting the ends parallel with the centerline of the highway or the fill slope shall be considered as included in the price paid per linear foot for the designated item of pipe and no additional allowance will be made therefor.

ITEM 465

PIPE SEWERS

465.1. Description. This item shall consist of furnishing all pipe and/or materials for and constructing precast concrete, corrugated metal pipe or monolithic concrete pipe sewer mains, laterals, stubs, and inlet leads including all applicable work such as excavating, bedding, jointing, materials, testing, etc., prescribed under the Items, "Excavation and

Backfill for Sewers", "Reinforced Concrete Pipe Culverts", and "Corrugated Metal Pipe". The sewers shall be of the sizes, types, strengths and dimensions shown on the plans or as designated by the Engineer, and shall include all joints or connections to new or existing pipes, sewers, manholes, inlets, etc., as may be required to complete the work.

465.2. Materials.

(1) **Pipe.** Concrete pipe 12 inches diameter and over shall conform to the D-load or class specified on the plans and in accordance with the Item, "Reinforced Concrete Pipe Culverts".

Concrete pipe smaller than 12 inches diameter shall conform to the requirements of ASTM Designation: C 14.

Corrugated metal pipe shall conform to the Item, "Corrugated Metal Pipe". The galvanized steel smooth liner for Type 1A pipe shall be polymer coated with a minimum of 10 mils on each side. The outer liner shall be galvanized, unless otherwise shown on the plans.

After delivery along the trenches, the pipe and specials will be subjected to a rigid inspection for transportation and handling damages incurred after acceptance at the source of manufacture. Pipe may be repaired if necessary and will be acceptable if, in the judgement of the Engineer, the repairs are sound and properly completed, and the repaired pipe conforms to the requirements of these specifications.

(2) **Concrete.** All concrete other than materials for pipe shall be Class "C" concrete conforming to the requirements of the Item, "Concrete Structures", and the Item, "Concrete for Structures".

(3) **Mortar.** Mortar shall be composed of one part Portland cement and two parts sharp, clean mortar sand suitably graded for the purpose, but conforming in other respects to the provisions of the Item, "Concrete for Structures", for fine aggregate. Hydrated lime or lime putty may be added to the mix but in no case shall it exceed ten percent by weight of the total dry mix.

(4) **Reinforcing Steel.**

(a) Reinforcing steel and the placing thereof shall conform to the requirements of the Item, "Reinforcing Steel".

(b) Circumferential reinforcing hoops for monolithic reinforced concrete pipe sewers shall conform to the details shown on the plans. Unless indicated otherwise on the plans, the longitudianl reinforcement shall be continuous throughout the length of the sewer and all bar splices shall be a minimum of twenty bar diameters length.

465.3. Construction of Pipe Sewers.

(1) **Installation of Pipe.** No pipe shall be installed in the trench until the excavation has been completed as required on the plans, the bottom of the trench shaped and prepared for the required bedding, and the trench approved for condition, line, and grade by the Engineer.

The Contractor shall furnish and place in position all necessary batter boards for controlling the work as directed by the Engineer. The batter boards must be approved by the Engineer, and shall be adequately supported. The boards and all location stakes must be protected from damage and/or change of location. The Contractor shall furnish good, sound, twilled lines for use in achieving lines and grades, and the necessary plummets and graduated poles be of a form and material approved by the Engineer.

The Contractor may furnish laser beam control for line and grade, in lieu of the above, when approved by the Engineer.

All pipes shall be laid and jointed in the dry, regardless of the type of joint or joint material used.

The pipes shall be laid and fitted together in the trench to accurate line and grade as shown on the plans.

Concrete pipe shall be laid with the tongue end downstream. The tongue end of one pipe joint shall project the full depth into the groove end of the next downstream pipe joint in such a manner that earth does not get into the annular space around the tongue.

(2) **Joints.** All joints shall conform to the requirements of the Items, "Reinforced Concrete Pipe Culverts" and "Corrugated Metal Pipe".

(3) **Connections.** Connections of pipe sewer to existing sewers or sewer appurtenances shall be as shown on the plans or directed by the Engineer. Connections shall be made to prevent the occurrence of bi-metallic corrosion or any other corrosion that can result by joining incompatible materials. The bottom of the existing structure shall be mortared or concreted if necessary, to eliminate any drainage pockets created by the new connection, and in general accord with details for the new structure as shown on the plans. Where the sewer is connected into old structures which are to remain in service, any damage to the structure resulting from the work of making the connection shall be restored by the Contractor to the satisfaction of the Engineer.

(4) **Stub Ends.** Stubs, for connnection to future work not covered by plans, shall be finished by building a watertight two course brick plug into the free end of the pipe, or with a precast concrete plug.

(5) **Control of Ground Water.** Sewers shall be built in the dry. If it becomes necessary to employ additional sheathing or to provide concrete

bedding below sub-grade to accomplish this objective, such additional provisions shall be approved by the Engineer, and shall be provided by the Contractor without additional compensation.

(6) Forms for Monolithic Pipe Sewers. There shall be provided suitable collapsible centers or forms with smooth surfaces rigidly braced for strength. The bracing shall be adequate to prevent deviations from the correct lines during construction. All steel forms shall be made accurately and neatly. Similar parts in each longitudinal section of form shall be interchangeable. Bent plates requiring close fit shall be rolled and fabricated to the correct curves prior to assembling. Suitable forms shall be provided for bends in the sewer. Steel filler plates shall be furnished as required. All steel center forms or "pans" must be approved by the Engineer prior to use in construction. If, during construction, any forms become dented or warped or in any other manner unsuitable for use, such forms may be rejected by the Engineer until such time that the Contractor reconditions the forms making them suitable for further use.

All wooden forms shall be built of clean, sound, cured lumber, reasonably free from knots, dressed on all sides, and neatly fitted. Forms for interior surfaces of sewers shall be lined or faced with 1 inch x 4 inch S4S timber. The form surface shall be watertight and fastened securely to the ribs or supports. No forms built up in the trench or ribs with separate pieces of wooden lagging will be allowed except for specials or curves. No center or form shall be used which is not clean and of proper shape and strength. Before placing concrete or reinforcement, the forms shall be coated with lubricants to prevent adherence to the concrete.

Circular forms shall be set on concrete blocks of proper thickness with dimensions approximately 6 inch x 6 inch and spread on about 5-foot centers along the sewer and shall have a groove of size and depth to provide for proper support and cover of reinforcement.

(7) Concrete Placement for Monolithic Pipe Sewers. After the trench has been excavated in accordance with the Item, "Excavation and Backfill for Sewers", that portion of the sides of the trench that will be in contact with the concrete shall be hand trimmed and shaped to conform to the section of the sewer to be constructed. The bottom of the trench shall be fine graded to the grade established. Below the grade line so established, backfill will not be permitted. When timber sheathing or flooring is employed, proper allowances for timber thickness shall be made.

Upon completion of the trench and following inspection and approval by the Engineer, the Contractor shall place the reinforcing steel and forms (adequately braced in proper position) and place concrete. The top of the sewer shall be finished by hand with a wooden float. The thickness of the top shall be checked with a wire gage.

Horizontal joints will not be permitted unless shown on the plans. Each run of concrete shall end against a vertical header which shall remain in place for a minimum period of eight hours. Longitudinal reinforcement shall continue through the header for a minimum distance of twenty bar diameters.

465.5. Measurement. The longitudinal measurement of pipe sewers will be along the pipe flow line to the inside faces of manholes, inlets, and box sewers or box culverts, and in the case of intersecting pipe spurs, branches, laterals, or trunks, the measurement will be made to the intersection of the pipe flowlines. Stubs will be measured along the pipe flowline from the end of the stub to the appropriate terminal as described above.

All pipe sewer mains, laterals, leads, and stubs will be measured as prescribed above and classified as pipe sewers for the purpose of payment.

465.6. Payment. Payment for pipe sewers, measured as prescribed above, will be made at the unit price bid per linear foot for the various sizes of "Pipe Sewers", of the type specified, complete in place except that excavation shall be paid for as required under the Item, "Excavation and Backfill for Sewers".

Such payment shall be full compensation for furnishing all concrete materials, reinforcing steel, precast concrete pipe, corrugated metal pipe, mortar, and for all other materials, tools, labor, equipment, and incidentals required to perform the applicable work prescribed herein.

ITEM 466

METAL END SECTION

466.1. Description. This item shall consist of furnishing and installing metal end sections conforming to the requirements outlined herein and as shown by the plan details, at the locations shown on the plans, for use with corrugated metal pipe.

466.2. Materials and Manufacture. All materials and fabrication of metal end sections shall meet the governing requirements for the Item, "Corrugated Metal Pipe". All steel sheet metal parts shall be galvanized and the minimum gage shall be as shown by the plan details.

466.3. Construction Methods. Metal end sections shall be installed at the locations shown on the plans unless otherwise directed by the Engineer.

Methods and procedure shall conform to the governing requirements for the Item, "Corrugated Metal Pipe". Excavation and backfill shall be in accordance with the Item, "Structural Excavation".

466.4. Measurement. Complete and accepted work as prescribed by this item shall be measured as each metal end section of the size and coating specified, complete in place with coupling band and toe plate as shown on the plans. Required excavation and backfill will not be measured, but will be subsidiary to this item.

466.5. Payment. The work performed and material furnished as prescribed by this item, measured as provided herein shall be paid for at the contract unit price bid for each "Metal End Section", of the size specified, which price shall be full compensation for furnishing all materials, including coupling bands and toe plates, when required for excavation and backfill, and for all labor, equipment, tools and incidentals necessary to complete the work.

ITEM 467

PRECAST END SECTION

467.1. Description. This item shall govern for the furnishing and installing of "Precast End Sections" for use with concrete pipe, conforming to the requirements contained herein and as shown by the plans, at the locations shown on the plans.

467.2. Materials and Manufacture. Materials, design, reinforcement and fabrication of end sections shall meet the requirements of ASTM C76, Class II Reinforced Concrete Pipe, Wall B.

467.3. Construction Methods. Precast end sections shall be installed at the locations shown on the plans, in accordance with the Item, "Reinforced Concrete Pipe Culverts". Excavation and backfill shall be in accordance with the Item, "Structural Excavation" or "Sewer Excavation", and the requirements of the plans.

467.4. Measurement. Complete and accepted work as prescribed by this item shall be measured as each precast end section of the size specified, complete in place as required by the plans. No measurement will be made for the excavation and backfill required.

467.5. Payment. The work performed and material furnished as prescribed by this item, measured as provided herein , shall be paid for at the contract unit price bid for each "Precast End Section" of the size specified, which price shall be full compensation for furnishing all materials, labor, equipment, tools, excavation and backfill and incidentals necessary to complete the work.

ITEM 468

FLARED CONCRETE INLET

468.1. Description. This item shall consist of furnishing and installing flared concrete inlets for hydraulic improvement of the upstream end of the structure. They shall conform to the requirements outlined herein and as shown by the plan details, at the locations shown on the plans.

468.2. Materials and Manufacture.

(1) **General.** Except as modified herein, materials, manufacture and design of flared concrete inlets shall conform to ASTM Designation: C 507, Reinforced Concrete Elliptical Culvert, Storm Drain, and Sewer Pipe.

(2) **Design.** The cross-sectional shape of the mouth of the tapered inlet shall be elliptical with the major axis 1.5 times the minor axis. The minor axis shall equal the nominal diameter of the culvert barrel. The elliptical shape at the mouth shall, in a distance of 1.5 times the diameter of the culvert barrel, transition to a circular section equal to the nominal diameter of the culvert barrel. The circular end shall have a tongue so formed that it will permit effective jointing and placement with a circular concrete pipe barrel without appreciable irregularities in the flow line. The shell thickness, the amount of circumferential reinforcement and the strength of the flared concrete inlet shall be as designated in Table I.

(3) **Physical Test Requirements.** Acceptability of the flared concrete inlets for all sizes shall be determined by the results of material tests as required in Sections 5, 6, and 7 of the ASTM Designation: C 507; by crushing tests on cores taken from the barrel of the completed and cured flared inlet; by absorption tests on samples from the wall of the flared inlet; and by inspection of the finished flared inlet including amount and placement of reinforcement, to determine its conformance with the design prescribed in these specifications and its freedom from defects. The manufacturer shall furnish facilities and personnel for taking the cores from the flared inlet and for determining the compressive strength of the samples.

When the cores cut from a section of the flared inlet successfully meet the strength requirement, the core-holes shall be plugged and sealed by the

manufacturer in a manner such that the flared inlet will meet all of the test requirements of ASTM Designation: C 507. Flared Inlets so sealed will be accepted for use.

Internal Diameter of Circular End	Internal Dimensions of Elliptical End	Minimum Wall Thickness	Minimum Reinforcement, Sq. In. per Linear Ft.	
			Inner Cage	Outer Cage
in.	in.	in.	Concrete Strength = 4000 psi	
18	18x27	3 1/4	0.26	
24	24x36	3 3/4	0.24	0.24
30	30x45	4 1/2	0.26	0.26
36	36x54	5	0.33	0.33
42	42x63	6	0.45	0.45
48	48x72	6 1/2	0.53	0.53
54	54x81	7	0.61	0.61
			Concrete Strength = 5000 psi	
60	60x90	7 1/2	0.70	0.70
66	66x99	8 1/2	0.88	0.88
72	72x108	9	0.95	0.95

NOTE 1: Single cage reinforcement, providing tension steel at top, bottom, and springline, shall be permitted in lieu of double cage reinforcement. The area of such reinforcement shall be 112% of the tabulated inner cage area.

NOTE 2: The above reinforcement and wall thickness meets the minimum requirements for at least a Class III concrete pipe. This design is sufficient for a fill height above the inlet of 13 feet. For strength requirements not shown, a special design for reinforcement is necessary.

TABLE 1

468.3. Construction Methods. Flared concrete inlets shall be installed at the locations shown on the plans unless otherwise directed by the Engineer. Methods and procedure shall conform to the governing requirements of specification for the pipe barrel to which the flared inlet is attached. Excavation and backfill shall be in accordance with the Item, "Structural Excavation".

468.4. Measurement. Complete and accepted work as prescribed by this item shall be measured as each flared concrete inlet of the size specified, complete in place as shown on the plans. The size specified shall be the nominal diameter of the circular end. Required excavation and backfill will not be measured, but will be subsidiary to this item.

468.5. Payment. The work performed and materials furnished as prescribed by this item, measured as provided herein shall be paid for at the contract unit price bid for each "Flared Concrete Inlet" of the size specified which price shall be full compensation for furnishing all material for excavation and backfill and for all labor, equipment, tools and incidentals necessary to complete the work.

ITEM 469

FLARED METAL INLET

469.1. Description. This item shall consist of furnishing and installing flared metal inlets for hydraulic improvement of the upstream end of the structure. They shall conform to the requirements outlined herein and as shown by the plan details, at the locations shown on the plans.

469.2. Materials and Manufacture. All materials and fabrication of flared metal inlets shall meet the governing requirements for the Item, "Corrugated Metal Pipe".

469.3. Design. The cross-sectional shape of the mouth of the tapered inlet shall be elliptical with the major axis 1.5 times the minor axis. The minor axis shall equal the nominal diameter of the culvert barrel. The elliptical shape at the mouth shall, in a distance of 1.5 times the diameter of the culvert barrel, transition to a circular section equal to the nominal diameter of the culvert barrel. The circular end shall have a circular section that has a maximum length of six inches. The flared metal inlet shall be of the gage specified on the plans.

469.4. Construction Methods. Flared metal inlets shall be installed at the locations shown on the plans unless otherwise directed by the Engineer. Methods and procedure shall conform to the governing requirements for the Item, "Corrugated Metal Pipe". Excavation and backfill shall be in accordance with the Item, "Structural Excavation".

469.5. Measurement. Complete and accepted work as prescribed by this item shall be measured as each flared metal inlet of the size specified, complete in place as shown on the plans. The size specified shall be the nominal diameter of the circular end. Required excavation and backfill will not be measured, but will be subsidiary to this item.

469.6. Payment. The work performed and material furnished as prescribed by this item, measured as provided herein shall be paid for at the contract unit price bid for each "Flared Metal Inlet" of the size specified, which price shall be full compensation for furnishing all materials for excavation and backfill and for all labor, equipment, tools and incidentals necessary to complete the work.

ITEM 470

MANHOLES AND INLETS

470.1. Description. This item shall govern for the construction of manholes and inlets complete in place or to the stage detailed on the plans and the materials used therein, including the installation, and when required, the furnishing of frames, grates, rings and covers. Junction boxes shall be classified as manholes.

When approved by the Engineer the Contractor may furnish prefabricated manholes, inlets, risers and/or appurtenances.

470.2. Types. The various types of manholes and inlets are designated on the plans by letters or by numbers indicating the particular design of each. Each type shall be constructed in accordance with the details shown on the plans and to the depth required by the profile and schedules given.

470.3. Stages of Construction. All types of manholes and inlets may be built either complete in one stage or in two stages hereinafter described as Stage I Construction and Stage II Construction.

Stage I Construction shall consist of that portion of manholes and inlets designated as such on the plans. Stage I Construction shall include the furnishing and installation of a temporary wooden cover for both manholes and inlets and the required manhole steps in accordance with the details shown on the plans. Only that portion of the total depth included in Stage I Construction as designated on the plans shall be constructed under Stage I Construction.

For Inlet Units, Stage I Construction shall consist of furnishing and installing the sewer pipe from the storm sewer to a point below the top of curb as indicated on the plans including the furnishing and installation of a temporary precast concrete plug for the exposed end of the sewer pipe.

Stage II Construction shall consist of that portion of the complete manhole or inlet not covered under Stage I. This shall include the remaining wall height and top of manhole or inlet including the installation of frames, grates, rings and covers, the furnishing and installation of manhole steps, curb beams and/or collecting basins in accordance with the plans and specifications.

470.4. Materials.

(1) **Concrete.** Concrete for manholes and inlets shall be Class "A" concrete when used with precast pipe sewer construction and Class "C" concrete when used with monolithic pipe sewer construction conforming to the requirements of the Item, "Concrete Structures", and the Item, "Concrete for Structures", except as otherwise provided on the plans.

(2) **Mortar.** Mortar shall be composed of one part Portland cement and two parts clean, sharp mortar sand suitably graded for the purpose by conforming in other respects to the provisions of the Item, "Concrete for Structures" for fine aggregate. Hydrated lime or lime putty may be added to the mix but in no case shall it exceed 10 percent by weight of the total dry mix.

(3) **Reinforcing Steel.** Reinforcing steel shall conform to the requirements of the Item, "Reinforcing Steel".

(4) **Structural Steel.** Structural steel shall conform to the requirements of the Item, "Steel Structures" and the Item, "Metal for Structures".

(5) **Brick.** Bricks shall be of first quality, sound, hard-burned, perfectly shaped brick. Shale bricks, if used, shall be homogeneous, thoroughly and uniformly burned. Bricks shall not absorb more than 16 percent of water by weight when submerged in water for 24 hours, having been in a completely dry state prior to placing in water. Clay brick shall conform to the requirements of ASTM Designation: C 32, Grade NA or equal. Concrete brick meeting the requirements of ASTM Designation: C 55, Grade A, shall be acceptable.

(6) **Concrete Blocks.** Concrete blocks when shown on the plans shall conform to the requirements of ASTM Designation: C 139.

(7) **Frames, Grates, Rings and Covers.** Frames, grates, rings and covers shall conform to the requirements of the Item, "Frames, Grates, Rings and Covers".

(8) **Cast Iron or Aluminum.** Cast iron for supports, steps and inlet units shall conform to the shape and dimensions shown on the plans. The castings shall be clean and perfect, free from sand or blow holes, or other defects. Cast iron castings shall conform to the requirements of "Gray Iron Castings" ASTM Designation: A 48, Class 30. Steps may be either cast iron conforming to the requirements of "Gray Iron Castings" ASTM Designation: A 48, Class 30, or "Ductile Iron Castings" conforming to ASTM Designation: A 536, Grade 65-45-12, or aluminum conforming to the requirements of ASTM Designation: B 221, Alloy 6005-T5.

(9) **Timber.** Timber for temporary covers when used with Stage I Construction shall be sound, new or used timber of minimum 3 inch nominal thickness, reasonably free of knots and warps.

(10) **Other Materials.** When prefabricated manholes and/or inlets are permitted, other materials such as concrete or fiberglass, will be considered. When of precast concrete, the manholes or inlets shall conform to the Item, "Headwalls, Inlets and Manholes". When of fiberglass or other material, the Contractor shall submit to the Engineer, complete design and material criteria so that a structural analysis can be made.

470.5. Construction Methods.

(1) **General.** All concrete work shall be performed in accordance with the requirements of the Item, "Concrete Structures", unless otherwise specified. Forms will be required for all concrete walls, except where the nature of the surrounding material is such that it can be trimmed to a smooth vertical face (the outside form for concrete bases supporting brick walls may be omitted with approval by the Engineer). Where brick is used in wall construction, cast iron steps shall be mortared into the joints as shown on the plans. Where concrete is used in wall construction, the steps shall be cast into the wall when the concrete is placed. All brick work shall be laid with one half of an inch "shoved" joints. Plastered or buttered joints are prohibited. Every fifth course of brick shall be a header course or bond course with the long axis of such course laid perpendicular to the long axis of the preceding four courses.

(2) **Manholes and Inlets for Precast Concrete Pipe Sewers.** The construction of manholes and inlets for precast concrete pipe sewers shall be done as soon as is practicable after sewer lines into or through the manhole or inlet locations are completed. All sewers shall be cut neatly at the inside face of the walls of the manhole or inlet and pointed up with mortar.

(3) **Manholes and Inlets for Monolithic Pipe Sewers.** Bases for manholes and inlets on monolithic pipe sewers may be placed monolithic with the sewer or, at the Contractor's option, may be placed after the sewer is constructed.

(4) **Manholes for Box Sewers.** Bases for manholes for box sewers shall be cast as an integral part of the sewer. The manholes may be constructed prior to backfilling or, if the Contractor so elects, the manhole opening may be covered temporarily with timber to facilitate the compaction of backfill for the sewer as a whole with tractor equipment. Thereafter, required excavation for the manhole shall be made and the manhole constructed and backfilled in accordance with the plans. Manholes for box sewers shall include all manhole steps required in the wall of the sewer.

(5) **Inverts.** The inverts passing out or through the manhole or inlet shall be shaped and routed across the floor of the manhole or inlet as shown on the plans. This shaping may be accomplished by adding and shaping mortar or concrete after the base is cast or by placing the required additional material with the base.

(6) **Finishing Complete Manholes and Inlets.** Manholes and inlets shall be completed in accordance with the plans. Backfilling to original ground elevation shall be in accordance with the provisions of the Item, "Structural Excavation" or the Item, "Excavation and Backfill for Sewers".

(7) **Finishing Stage I Construction.** Stage I Construction shall be completed by constructing the walls to the elevations shown on the plans and backfilling to required elevations in accordance with the requirements of the Item, "Structural Excavation" or the Item, "Excavation and Backfill for Sewers".

(8) **Stage II Construction.** Subgrade and base course construction shall be completed over manholes constructed as provided for Stage I. Stage II Construction of manholes or inlets shall consist therefore of excavating to expose the top of Stage I Construction and completing the manhole or inlet in accordance with the plans and these specifications, including backfill and cleaning of all debris from the bottom of the manhole or inlet.

(9) **Inlet Units.** Cast iron or steel inlet units shall be installed in conjunction with the construction of concrete curb and gutter. Prior to placing concrete for curb and gutter, the inlet units shall be set securely in position. Openings for the inlets and recesses in curb and gutter, as indicated on the plans, shall be formed in conjunction with the curb and gutter forms. Concrete for curb and gutter adjacent to the inlets shall be placed using care to secure thoroughly compacted concrete around the inlet castings and formed openings and recesses without displacement of the inlet units in the forms.

470.6. Measurement.

All manholes and inlets satisfactorily completed in accordance with the plans and specifications will be measured by each manhole or inlet, complete, or by each manhole or inlet completed to the stage of construction required by the plans.

Extension to inlets will be measured by each extention separately from the inlet.

Excavation and backfill will not be measured under this item but will be measured as required by the Item, "Structural Excavation", or the Item, "Excavation and Backfill for Sewers", as the case may be.

Frames, grates, rings and covers will be measured as required under the Item, "Frames, Grates, Rings and Covers".

470.7. Payment.

(1) **Manholes, Complete.** Payment for complete manholes of the type shown on the plans in place and in accordance with these specifications and measured as prescribed above will be made at the unit price bid for each "Manhole, Complete", of the type specified.

(2) **Inlets, Complete.** Payment for inlets of the type shown on the plans in place in accordance with these specifications and measured as

prescribed above will be made at the unit price bid for each "Inlet, Complete", or "Inlet Unit", of the type specified. Payment for inlets with extensions of the length shown on the plans and measured as prescribed above shall be made at the unit price bid for each "Inlet Extension".

(3) **Manholes, Stage I.** Payment for Manholes, Stage I in place in accordance with these specifications and measured as prescribed above will be made at the unit price bid for each "Manhole, Stage I", of the type specified.

(4) **Manholes, Stage II.** Payment for Manholes, Stage II in place in accordance with these specifications and measured as prescribed above will be made at the unit price bid for each "Manhole, Stage II", of the type specified.

(5) **Inlets, Stage I.** Payment for Inlets, Stage I in place in accordance with these specifications and measured as prescribed above will be made at the unit price bid for each "Inlet, Stage I", of the type specified.

(6) **Inlets, Stage II.** Payment for Inlets, Stage II in place in accordance with these specifications and measured as prescribed above will be made at the unit price bid for each "Inlet, Stage II", of the type specified.

Payments as provided under the methods above shall be full compensation for furnishing all concrete, reinforcing steel brick, mortar, aluminum and castings, and for all other materials, tools, equipment and incidentals required to perform the applicable work prescribed above. Frames, grates, rings and covers will be paid for separately as required under the Item, "Frames, Grates, Rings and Covers".

ITEM 471

FRAMES, GRATES, RINGS AND COVERS

471.1. Description. This item shall govern for the furnishing and installation of frames, grates, rings and covers for inlets, manholes and other structures in accordance with the plans and specifications.

471.2. Materials. Welded steel grates and frames shall conform to the member size, dimensions and details shown on the plans and shall be welded into an assembly in accordance with those details. Steel shall conform to the requirements of ASTM Designation: A 36 or equal.

Castings, whether Carbon-Steel, Gray Cast Iron or Ductile Iron shall conform to the shape and dimensions shown on the plans and shall be clean substantial castings, free from sand or blow holes or other defects. Surfaces of the castings shall be free from burnt-on sand and shall be reasonably smooth. Runners, risers, fins, and other cast-on pieces shall be removed from the castings and such areas ground smooth. Bearing surfaces between

manhole rings and covers or grates and frames shall be cast or machined with such precision that uniform bearing shall be provided throughout the perimeter area of contact. Pairs of machined castings shall be matchmarked to facilitate subsequent identification at installation.

Steel castings shall conform to the requirements of the specifications for "Mild to Medium Strength Carbon Steel Castings for General Application", ASTM Designation: A 27. Grade 70-36 shall be furnished unless otherwise specified.

Cast iron castings shall conform to the requirements of "Gray Iron Castings", ASTM Designation: A 48, Class 30.

Ductile iron castings shall conform to the requirements of "Ductile Iron Castings" ASTM Designation: A 536. Grade 60-40-18 shall be used unless otherwise specified.

Commercial type frames, rings, risers and/or appurtenances may be used with prior approval of the Engineer.

471.3. Construction Methods. Frames, grates, rings and covers shall be constructed of the materials as specified and in accordance with the details shown on the plans and shall be placed carefully to the lines and grades indicated on the plans or as directed by the Engineer.

All welding shall conform to the requirements of the Item, "Structural Welding". Frames, grates, rings and covers shall be given one coat of a commercial grade primer and two coats of commercial grade aluminum paint. Painting of gray iron castings will not be required, except when used in conjunction with structural steel shapes.

Commercial grade galvanized bolts and nuts shall be used. The zinc coating shall be uniform in thickness, smooth and continuous.

471.4. Measurement. Frames, grates, rings and covers, when a part of the complete manhole, will not be measured for payment but will be considered subsidiary to the Item, "Manholes and Inlets". When not a part of a new or complete manhole frames, grates, rings and covers shall be measured by the unit of each "Grate", "Frame", "Grate and Frame", "Frame and Cover", or "Ring and Cover", complete in place.

471.5. Payment. When payment is required in accordance with Article 471.4. herein, payment for frames, grates, rings and covers will be made at the unit price bid for each "Grate", "Frame", "Grate and Frame", "Frame and Cover", or "Ring and Cover" as the case may be unless otherwise shown on the plans, which price shall be full compensation for furnishing all materials, tools, equipment, labor and incidentals necessary to complete the work.

ITEM 472

RELAYING CULVERT PIPE

472.1. **Description.** This item shall govern for the removal and reinstallation of existing culvert pipe or pipe sewer. Pipe in place and designated for use in new work, shall be removed from the existing locations, transported to the new locations, cleaned, and installed as noted on the plans and in accordance with this specification, in such manner as to prevent damage to the pipe and fittings. Unless otherwise provided on the plans, any culvert pipe or fittings and concrete headwalls designated for reuse, damaged by the Contractor shall be replaced by the Contractor at his own expense and without additional compensation.

472.2. **Construction Methods.** The installation of all pipes shall conform to the requirements of the specification for the type or kind of pipe to be relaid. Connections shall be made to existing structures as called for on the plans, and when the connection is to an existing pipe of the same type as that to be relaid, the connection shall conform to the requirements for jointing sections of pipe as described in the pertinent pipe specifications. The connection between reinforced concrete pipe and corrugated metal pipe shall be made with a suitable concrete collar having a minimum thickness of 4 inches.

The top and bottom of reinforced concrete pipe shall be marked prior to being moved and when relaid shall be placed in the same position with reference to top and bottom as before it was removed.

When headwalls and aprons are specified on the plans for reuse, the portion to be reused shall be severed from the culvert and moved to the new position previously prepared by hoisting with a crane, rolling, or other approved methods. Connections shall conform to the requirements for joining sections of pipes as designated herein. Any portion of the headwalls and aprons damaged during the moving operations by the Contractor shall be restored to their original condition at his entire expense. The Contractor, if he so desires, may remove and dispose of the existing headwalls and construct new headwalls at his expense in accordance with the pertinent specifications and design indicated on the plans or as furnished by the Engineer.

472.3. **Measurement.** Relaid pipe shall be measured by the linear foot of complete and accepted pipe in place in accordance with these specifications. Such measurements shall be made between the ends of the pipe barrel along the flow line as installed. Where spurs or branches, or connections to existing pipe lines are involved, measurement of the spur or connecting pipe shall be made from the intersection at its central axis with the outside sur-

face of the pipe into which it connects. Where inlets, catch basins, manholes, or other structures are included in lines of pipe, that length of pipe provided for tie into the structure wall shall be included for measurement but no other portion of the structure length or width shall be so included.

Excavation for taking up existing pipes for relaying or moving is considered incidental to the pay items involved and will not be measured for payment. Excavation in natural ground for installing culvert pipe or pipe sewer to be relaid will be measured as prescribed in the Item, "Structural Excavation", or the Item, "Excavation and Backfill for Sewers".

472.4. **Payment.** Payment for relaying culvert pipe measured as prescribed above will be made at the contract unit price bid for "Relaying Culvert Pipe 18 inch Diameter and Under", "Relaying Culvert Pipe Over 18 inch Diameter", or "Relaying Pipe Sewer", of the size specified, as the case may be, which payment shall be full compensation for excavating and removing the pipe from its original location; excavation, hauling and placing of select material where required for bedding pipe in rock excavation; the preparation and shaping of beds; hauling, placing and joining of pipe; for moving and reusing headwalls; for all connections to existing structures and for all other items of materials, labor, equipment, tools, and incidentals necessary to complete the work in accordance with the plans and these specifications, except excavation and backfill for relaying which will be paid for in accordance with the Item, "Structural Excavation", or the Item, "Excavation and Backfill for Sewers". Where pipes are laid on a skew, or where pipe ends are cut to fit the fill slopes, full compensation for cutting the ends parallel with the centerline of the highway, or to the fill slopes, shall be considered as included in the price paid per linear foot for the designated item of pipe relaid and no additional allowance will be made therefor.

ITEM 473

LAYING CULVERT PIPE

473.1. **Description.** This item shall govern for the installation of culvert pipe, furnished by the Department, at the locations and to the line and grades shown on the plans or as designated by the Engineer. Pipe furnished the Contractor may be salvaged or new pipe or a combination of both. Any pipe damaged by the Contractor shall be replaced at his own expense without additional compensation.

473.2. **Construction Methods.** The installation of concrete pipe shall conform to the requirements of the Item, "Reinforced Concrete Pipe Culverts" and corrugated metal pipe shall be installed in accordance with

the requirements of the Item, "Corrugated Metal Pipe". Connections shall be made to existing structures as called for on the plans, and when the connection is to an existing pipe of the same type as that to be laid, the connection shall conform to the requirements for jointing sections of pipe as described in the pertinent pipe specifications. The connection between reinforced concrete pipe and corrugated metal pipe shall be made with a suitable concrete collar having a minimum thickness of 4 inches.

473.3. Measurement. Pipe laid under these specifications will be measured by the linear foot of complete and accepted pipe in place. Such measurement will be made between the ends of the pipe barrel along the flow line as installed. Where spurs or branches, or connections to existing pipe lines are involved, measurement of the spur or connecting pipe will be made from the intersection of its central axis with the outside surface of the pipe into which it connects. Where inlets, manholes, or other structures are included in lines of pipe, that length of pipe provided for tie into the structure wall will be included for measurement but no other portion of the structure length or width will be so included.

Excavation in natural ground for installing culvert pipe will be measured as prescribed in the Item, "Structural Excavation".

473.4. Payment. Payment for laying culvert pipe measured as prescribed above will be made at the contract unit price bid for "Laying Culvert Pipe", which payment shall be full compensation for excavating, hauling, and placing of select material where required for bedding pipe in rock excavation; the preparation and shaping of beds; hauling, placing and joining of pipe; for all connections to existing structures, cutting pipe to proper length, and for all other items of materials, labor, equipment, tools, and incidentals necessary to complete the work in accordance with the plans and these specifications, except excavation and backfill for laying which will be paid for in accordance with the Item, "Structural Excavation". Where pipes are laid on a skew, or where pipe ends are cut to fit the fill slopes, full compensation for cutting the ends parallel with the centerline of the highway, or to the fill slopes, shall be considered as included in the price paid per linear foot for the designated item of pipe laid and no additional allowance will be made therefor.

ITEM 474

SLOTTED DRAIN

474.1. Description. This item shall govern for furnishing and installing slotted drains and slotted drain outfall connections, conforming to the requirements herein and as detailed in the plans.

474.2. Materials and Manufacture. The slotted drain shall be fabricated from full circle, helically corrugated, welded seam pipe, or from full circle, circumferentially corrugated, riveted or welded lap joint pipe. Fabrication shall be in accordance with the details shown in the plans, except as may be modified with permission of the Engineer.

The slotted drain outfall shall be full circle pipe of either type specified above, or may be from full circle pipe with a continuous lock seam.

All materials and fabrication of the slotted drains and slotted drain outfall shall conform to the provisions of the Item, "Corrugated Metal Pipe". The slotted drain and slotted drain outfall shall be of 16 gage corrugated, galvanized steel pipe unless otherwise shown on the plans. Grate assemblies shall conform to the details shown in the plans and with the provisions of ASTM Designation: A 36, and shall be galvanized after fabrication in accordance with ASTM Designation: A 123.

Areas where the grate is welded to corrugated pipe shall be painted with a good quality asphalt base aluminum paint. All welding shall be in accordance with the Item, "Structural Welding".

474.3. Construction Methods. The slotted drains and slotted drain outfalls shall be installed at the locations, lines, and grades shown in the plans unless otherwise directed by the Engineer. Methods and procedures shall conform to the details shown in the plans and to the governing requirements for the Item, "Corrugated Metal Pipe". Trenches for slotted drains and slotted drain outfall shall be backfilled as shown in the plans with low strength concrete (minimum two-sack cement per cubic yard) or as directed by the Engineer. Slotted drain and slotted drain outfall shall be furnished in 20-foot lengths wherever practical to minimize the number of joints required. Where pipes with slotted drain are to be joined together, the pipe ends shall have circumferential corrugations. The width of the locking band shall be not less than 10 1/2 inches. The locking devices shall be centered on the locking band and shall consist of 2 1/2″ x 1 1/2″ x 3/16″ angles, at least 2″ in length with the long leg spot welded to the locking band. One 1/2″ diameter bolt will be required to secure the band. The locking band shall be sized so that there is sufficient clearance between the ends of the band and the vertical sides of the slotted drain, in order for the locking band to be securely tightened around the pipes being joined. The slotted drain will terminate at least 1/2″ from the end of the pipe to provide a space between the ends of the drains, for the locking band bolt.

474.4. Measurement. Acceptable "Slotted Drain" and "Slotted Drain Outfall" will be measured by the linear foot. Such measurement will be made between the ends of the pipe along its centerline.

Quantities for "Slotted Drain" and "Slotted Drain Outfall" as shown on the plans and in the proposal shall be considered as final quantities and no further measurement will be required, unless revised by the Engineer during construction.

474.5. **Payment.** Payment for "Slotted Drain" measured as prescribed above will be made at the unit price bid per linear foot for the various sizes of pipe. Payment for "Slotted Drain Outfall" measured as prescribed above will be made at the unit price bid per linear foot for the various sizes of pipe.

The quantity to be paid for will be the quantity shown on the plans unless revised by the Engineer in accordance with Article 474.4. herein.

Such payment shall be full compensation for furnishing and transporting the drain pipe, hauling, excavating, placing, joining, and backfilling of pipes; band couplers; and for all other items of materials, labor, equipment, tools, and incidentals necessary to complete the applicable work prescribed herein.

ITEM 475

HEADWALLS, WINGWALLS, INLETS AND MANHOLES

475.1. **Description.** This item shall govern for the materials used and for constructing, furnishing and placing headwalls, inlets, wingwalls and manholes at the locations shown, and in accordance with the details shown on the plans. Junction boxes shall be classified as manholes. Unless otherwise shown on the plans, the Contractor shall have the option of furnishing cast-in-place, precast (formed) or precast (machine-made) headwalls, wingwalls, inlets and manholes, hereinafter described as concrete units.

475.2. **General.** Cast-in-place and precast (formed) concrete units shall conform to the requirements of the Item, "Manholes and Inlets", the Item, "Concrete Structures", the Item, "Reinforcing Steel" and the Item, "Concrete for Structures". Concrete units shall be of the various types shown on the plans and designated by letters or by numbers to indicate the particular design of each. Each type shall be constructed in accordance with the details shown on the plans, or approved by the Engineer, to the depth required by the profiles and schedules given.

Precast (machine-made) manholes shall meet the requirements of ASTM Designation C 478. Precast (machine-made) headwalls, wingwalls and inlets shall conform to the provisions contained herein for precast (machine-made) units.

475.3. **Materials.** Unless otherwise shown on the plans, concrete for cast-in-place and precast formed concrete units shall be class "A" conform-

ing to the requirements of the Item. "Concrete for Structures" except that Class "C" concrete shall be required when a unit is used with monolithic pipe sewer construction.

Concrete for precast machine-made units shall meet the requirements of ASTM Designation C 76, Sections: Reinforced Concrete, Cement, Aggregate, Mixture and Concrete Test Requirements for Concrete, and shall have a minimum 28 day compressive strength of 4,000 psi. Vibrating equipment used in making concrete test cylinders must be approved by the Engineer.

Concrete strength tests required for each run will be based on the average strength of two cylinders tested at either 7, 14 or 28 days. When compression tests are requested earlier than 28 days, the minimum number of test cylinders required shall be as follows:

6 cylinders when the first test is at 7 days.
4 cylinders when the first test is at 14 days
2 cylinders when the first test is at 28 days.

When the design strength for a run is attained by either the 7 or 14 day tests, further tests for that run will not be required.

Failure to attain design strength by the 28 day test will result in rejection of the run represented by the tests.

During the production of the precast machine-made units, at least one test (2 cylinders) shall be made to represent each group of 10 complete units, or fraction thereof, of each continuous run of production but not more than one test for each type and each size unit will be required in a single day. A continuous run of production may extend over a weekend shut down in production; however, a shut down for 5 days or more will not be considered a continuous run.

Reinforcing steel shall conform to the requirements of the Item, "Reinforcing Steel", and the details shown on the plans. A positive means of holding the steel cages in place throughout production of the concrete units shall be provided and shall be subject to approval of the Engineer. Welding of reinforcing steel will not be permitted unless specifically shown on the plan details and shall conform to the requirements of the Item, "Structural Welding". The maximum variation in the position of the reinforcement shall be plus or minus 10 percent of the wall thickness or plus or minus one half inch whichever is lesser. In no case, however, shall the cover over the reinforcement be less than shown on the plans.

475.4. Forms. Forms for precast (machine-made) concrete units shall be made of steel and shall comply with the requirements of the Item, "Concrete Structures".

475.5. Casting Tolerances. Allowable casting tolerances for concrete units shall not vary more than one-fourth of an inch, plus or minus, from the dimensions and configuration shown on the plans. Thickness in excess of that required shall not be cause for rejection provided that such excess thickness does not interfere with proper jointing or operation as determined by the Engineer.

475.6. Marking. The following information shall be clearly marked on each section of precast unit prior to leaving the casting yard:

(1) The date of manufacture.

(2) The name or trade-mark of the manufacturer.

475.7. Storage and Shipment. Precast units shall be stored on level blocking in a manner acceptable to the Engineer. No loads shall be placed on them until design strength is reached. Shipment of acceptable units may be made when the 28 day strength requirements have been met.

475.8. Rejection. Precast units may be rejected for non-conformity with any part of these specifications and also for any of the following reasons:

(1) Fractures or cracks passing through the shell, except for a single end crack that does not exceed the depth of the joint.

(2) Surface defects indicating honeycombed or open texture.

(3) Damaged or mis-shaped ends, where such damage would prevent making a satisfactory joint.

All rejected units shall be so marked by the Engineer and shall be replaced by the Contractor with acceptable ones meeting the requirements herein. Rejected units shall be removed immediately from the site of work.

475.9. Repairs. Occasional imperfections in manufacture or accidental injury during handling may be repaired and will be acceptable if, in the opinion of the Engineer, the repairs are sound and properly finished and cured and the repaired units conform with the requirements of these specifications.

475.10. Construction Methods. All excavation shall be in accordance with the requirements of the Item, "Structural Excavation" or the Item, "Excavation and Backfill for Sewers".

Precast concrete units shall be bedded on foundations of firm and stable material accurately shaped to conform to their bases.

The Contractor shall provide adequate means to lift and place the concrete units. Lifting holes may be formed during production, or punched through the fresh concrete immediately after stripping forms; however, care shall be taken not to damage the unit by spalling large areas. All lifting holes shall be repaired as outlined in Article 475.9 herein.

Connections to new or existing structures shall be made in accordance with details shown on the plans. Jointing material shall be in accordance with the Item, "Reinforced Concrete Pipe Culverts", or as specified on the plans.

Frames, grates, rings and covers, when required by the plans for use in a concrete unit, shall be installed in accordance with the Item, "Frames, Grates, Rings and Covers".

475.11. Measurement. Precast and cast-in-place units of each size and type, satisfactorily completed in accordance with the plans and specifications will be measured by each manhole, inlet, wingwall or headwall, complete, or by each manhole or inlet completed to the stage of construction required by the plans.

Extension to the inlets will be measured by each extension separately from the inlet.

Excavation and backfill, unless otherwise noted on the plans, will be measured as required by the Item, "Structural Excavation", or the Item, "Excavation and Backfill for Sewers", as the case may be.

Frames, grates, rings and covers, unless otherwise noted on the plans, will be measured as required under the Item, "Frames, Grates, Rings and Covers".

475.12. Payment. Payment for complete manholes of the types shown on the plans, in place and in accordance with these specifications and measured as prescribed above, will be made at the unit price bid for each "Manhole, Complete" of the type specified.

Payment for Inlets of the types shown on the plans, in place in accordance with these specifications and measured as prescribed above, will be made at the unit price bid for each "Inlet, Complete" of the type specified. Payment for inlet extensions of the lengths shown on the plans and measured as prescribed above shall be made at the unit price for each "Inlet Extension."

Payment for Manholes, Stage I, in place in accordance with these specifications and measured as prescribed above, will be made at the unit price bid for each "Manhole, Stage I" of the type specified.

Payment for Manholes, Stage II, in place in accordance with these specifications and measured as prescribed above, will be made at the unit price bid for each "Manhole, Stage II" of the type specified.

Payment for Inlets, Stage I, in place in accordance with these specifications and measured as prescribed above, will be made at the unit price bid for each "Inlet, Stage I" of the type specified.

Payment for Inlets, Stage II, in place in accordance with these specifications and measured as prescribed above, will be made at the unit price bid for each "Inlets, Stage II" of the type specified.

Payment for headwalls or wingwalls of the type shown on the plans, in place and in accordance with these specifications and measured as prescribed above, will be made at the unit price bid for each "Culvert Headwall or Wingwall" of the type specified.

Payment as provided above shall be full compensation for furnishing, transporting and placing all concrete, reinforcing steel, brick, mortar and castings for shaping of bed, jointing to the new or existing structures; for all other materials, tools, equipment, labor and incidentals necessary to perform the applicable work prescribed above, except, unless otherwise noted on the plans, excavation and backfill and frames, grates, rings and covers will be paid for under the Item, "Structural Excavation", the Item, "Excavation and Backfill for Sewers" or the Item, "Frames, Grates, Rings and Covers", as the case may be.

ITEM 476

JACKING, BORING OR TUNNELING PIPE

476.1. Description. This item shall govern for the furnishing and installation of pipe by the methods of jacking, boring or tunneling as shown on the plans and in conformity with this specification.

476.2. Materials. Pipe may be either corrugated metal pipe conforming to the Item, "Corrugated Metal Pipe", or reinforced concrete pipe, conforming to the Item, "Reinforced Concrete Pipe Culverts", and of the size, type, and class specified on the plans, or other types as may be specified by the Engineer or designated on the plans.

476.3. Construction.

(1) Jacking. If the grade of the pipe at the jacking end is below the ground surface, suitable pits or trenches shall be excavated for the purpose of conducting the jacking operations and for placing end joints of the pipe. Wherever end trenches are cut in the sides of the embankment or beyond it, such work shall be sheathed securely and braced in a manner satisfactory to the Engineer to prevent earth caving.

Where pipe is required to be installed under railroad embankments or under highways, streets, or other facilities by jacking or boring methods, construction shall be made in such a manner that will not interfere with the operation of the railroad, street, highway, or other facility, and shall not weaken or damage any embankment or structure. During construction

operations, barricades and lights to safeguard traffic and pedestrians shall be furnished and maintained, as directed by the Engineer, until such time as the backfill has been completed and then shall be removed from the site.

Heavy duty jacks suitable for forcing the pipe through the embankment shall be provided. In operating jacks, even pressure shall be applied to all jacks used. A suitable jacking head, usually of timber, and suitable bracing between jacks and jacking head shall be provided so that pressure will be applied to the pipe uniformly around the ring of the pipe. A suitable jacking frame or back stop shall be provided. The pipe to be jacked shall be set on guides, properly braced together, to support the section of the pipe and to direct it in the proper line and grade. The whole jacking assembly shall be placed so as to line up with the direction and grade of the pipe. In general, embankment material shall be excavated just ahead of the pipe and material removed through the pipe, and the pipe forced through the embankment with jacks, into the space thus provided.

The Contractor shall furnish for the Engineer's approval, a plan showing his proposed method of handling, including the design for the jacking head, jacking support or back stop, arrangement and position of jacks, pipe guides, etc., complete in assembled position. The approval of this plan by the Engineer will not relieve the Contractor from his responsibility to obtain the specified results.

The excavation for the underside of the pipe, for at least one third of the circumference of the pipe, shall conform to the contour and grade of the pipe. A clearance of not more than 2 inches may be provided for the upper half of the pipe. This clearance is to be tapered off to zero at the point where the excavation conforms to the contour of the pipe.

The distance that the excavation shall extend beyond the end of the pipe depends on the character of the material, but it shall not exceed 2 feet in any case. This distance shall be decreased on instructions from the Engineer, if the character of the material being excavated makes it desirable to keep the advance excavation closer to the end of the pipe.

The pipe, preferably, shall be jacked from the low or downstream end. Lateral or vertical variation in the final position of the pipe from the line and grade established by the Engineer will be permitted only to the extent of 1 inch in 10 feet, provided that such variation shall be regular and only in one direction and that the final grade of flow line shall be in the direction indicated on the plans.

If the Contractor desires, he may use a cutting edge of steel plate around the head end of the pipe extending a short distance beyond the end of the pipe with inside angles or lugs to keep the cutting edge from slipping back onto pipe.

When jacking of pipe is once begun, the operation shall be carried on without interruption, insofar as practicable, to prevent the pipe from becoming firmly set in the embankment.

Any pipe damaged in jacking operations shall be removed and replaced by the Contractor at his entire expense.

The pits or trenches excavated to facilitate jacking operations shall be backfilled immediately after the jacking of the pipe has been completed.

(2) **Boring.** The boring shall proceed from a pit provided for the boring equipment and workmen. Excavation for pits and installation of shoring shall be as outlined above under "Jacking". The location of the pit shall meet the approval of the Engineer. The holes are to be bored mechanically. The boring shall be done using a pilot hole. By this method an approximate 2 inch pilot hole shall be bored the entire length of the crossing and shall be checked for line and grade on the opposite end of the bore from the work pit. This pilot hole shall serve as the centerline of the larger diameter hole to be bored. Excavated material will be placed near the top of the working pit and disposed of as required. The use of water or other fluids in connection with the boring operation will be permitted only to the extent to lubricate cuttings; jetting will not be permitted.

In unconsolidated soil formations, a gel-forming colloidal drilling fluid consisting of at least 10 percent of high grade carefully processed bentonite may be used to consolidate cuttings of the bit, seal the walls of the hole, and furnish lubrication for subsequent removal of cuttings and installation of the pipe immediately thereafter.

Allowable variation from line and grade shall be as specified under "Jacking". Overcutting in excess of one inch shall be remedied by pressure grouting the entire length of the installation.

(3) **Tunneling.** Where the characteristics of the soil, the size of the proposed pipe, or the use of monolithic sewer, would make the use of tunneling more satisfactory than jacking or boring, or where called for on the plans, a tunneling method may be used.

The excavation for pits and the installation of shoring shall be as outlined above under "Jacking".

The lining of the tunnel shall be of steel of sufficient strength to support the overburden. The Contractor shall submit his proposed liner method to the Engineer for approval. Approval by the Engineer shall not relieve the Contractor of the responsibility for the adequacy of the liner method.

The space between the liner plate and the limits of excavation shall be pressure-grouted or mud-jacked.

Access holes for placing concrete shall be spaced at maximum intervals of 10 feet.

(4) **Joints.** If corrugated metal pipe is used, joints may be made by field bolting or by connecting bands, whichever is feasible. If reinforced concrete pipe is used, the joints shall be mortared from the inside, after installation as specified in the Item, "Reinforced Concrete Pipe Culverts".

476.4. **Measurement.** Jacking, boring or tunneling pipe will be measured by the linear foot of pipe complete in place. Such measurement will be made between the ends of the pipe along the flow line as installed.

476.5. **Payment.** The work performed and materials furnished as prescribed by this item, measured as provided under "Measurement" will be paid for at the unit price bid per linear foot for "Jacking or Boring Pipe" or "Jacking, Boring or Tunneling Pipe" as the case may be, of the type, size, and class specified on the plans, which price shall be full compensation for furnishing all materials, pipe liner materials required for tunnel operations, for all preparation, hauling and installing of same, and for all labor, tools, equipment, and incidentals necessary to complete the work, including excavation, backfilling and disposal of surplus material.

ITEM 477

SAFETY END TREATMENT

477.1. **Description.** This item shall govern for the materials to be furnished and for the construction of Safety End Treatment on structures where required by the plans.

477.2. **Materials.** Unless otherwise shown on the plans materials shall conform to the following:

Concrete - "Concrete Structures" and "Concrete for Structures" Unless otherwise noted on the plans, concrete shall be Class "A".
Reinforcing Steel - "Reinforcing Steel"
Corrugated Metal Pipe - "Corrugated Metal Pipe"
Concrete Pipe - "Reinforced Concrete Pipe Culverts" Minimum D-load 1000.
Pipe Runners - ASTM A53, Grade B or equivalent strength pipe or tube.
Bolts and Nuts - ASTM A307
Plates and Angles - ASTM A36

Unless otherwise noted on the plans, all pipe, plates, angles, nuts and bolts shall be galvanized in accordance with ASTM A123 or A153 whichever is pertinent.

477.3. Types of End Treatment.

1. Type I end treatment will consist of reinforced concrete wingwalls, apron slabs and pipe runners as shown on the plans.

2. Type II end treatment will consist of corrugated metal pipe or reinforced concrete pipe, with the ends tapered to the proper slope as shown on the plans. Type II end treatment may or may not include pipe runners, but when required will be as shown on the plans.

477.4. Construction. Construction shall be in accordance with the details shown on the plans and in accordance with the governing items which control the various construction methods required.

Headwalls designated for reuse that are damaged by the Contractor's operation shall be replaced by the Contractor at his expense. The Contractor may provide new headwalls at his expense, in lieu of salvaging and reusing existing headwalls.

Damaged galvanizing shall be repaired by the Contractor in accordance with Article 460.2. of the Item, "Corrugated Metal Pipe".

When riprap headwalls or collars are required they shall be in accordance with the plans and the Item, "Riprap".

Any required structural excavation shall be in accordance with the Item, "Structural Excavation".

Removal of portions of in place structures when required, shall be in accordance with the Item, "Removing Old Structures". The extension of concrete structures, when required, will be in accordance with the Item, "Extending Concrete Structures".

477.5. Measurement. Safety end treatment will be measured by 'each' safety end treatment of the type specified, or by 'each' safety end treatment of the type and size specified, as the case may be, complete in place.

(1) Measurement of Type I End Treatment for new structures will include the concrete and reinforcing steel required for headwalls, wingwalls and apron slabs, and for pipe runners and miscellaneous hardware.

(2) Measurement of Type I End Treatment for existing structures will include removing a portion of the old structure as required, in addition to that required in (1) above.

(3) Measurement of Type II End Treatment will include all pipe from the point of the beginning of bevel to the end of pipe, and pipe runners if required. Other pipe in the complete installation will be measured under the appropriate bid item.

In addition, safety end treatment of either type may be classed as to the size of structure, for measurement, in which case the type and size must be shown.

Structural excavation will not be measured but will be considered subsidiary to this item.

Any riprap headwalls or collars required by the plans will not be measured but will be considered subsidiary to this Item.

477.6. **Payment.** Payment for "Safety End Treatment, Type I", for "Safety End Treatment, Type I, (Size)", for "Safety End Treatment, Type II" or for "Safety End Treatment, Type II, (Size)" as the case may be will be paid for at the unit price bid for "Each" for the particular classification as measured herein.

This payment shall be full compensation for the breaking and removing of all concrete, when required, for all concrete, reinforcing steel, corrugated metal pipe, reinforced concrete pipe, riprap or riprap collars, pipe runners, nuts, bolts, plates and angles as may be required, for all structural excavation, galvanizing and for all labor, tools, equipment and incidentals necessary to complete the work.

ITEM 479

ADJUSTING MANHOLES AND INLETS

479.1. **Description.** This item shall govern for the furnishing of materials and for adjusting, abandoning or capping existing sewer manholes or inlets, where required by the plans. Manholes and inlets shall be adjusted to positions and/or elevations as shown on the plans or as ordered by the Engineer and in accordance with these specifications. Subject to the approval of the Engineer, prefabricated steel extension rings may be furnished for the adjustment of manholes.

479.2. **Materials.** Manholes or inlet rings, plates, grates and covers, and brick in good condition, removed from the manholes and inlets in the process of abandonment, capping or adjustment, may be re-used. Additional materials required shall conform to the pertinent provisions for those materials of the Item, "Manholes and Inlets". When prefabricated steel extension rings are furnished, the material shall be ASTM A 36 or equal.

479.3. **Construction.** Manholes or inlet rings, covers, plates, and grates shall be removed carefully and the contact areas shall be cleaned of all mortar and grease. Rings, covers, plates, or grates broken in the process of removal and cleaning shall be replaced in kind by the Contractor at his expense.

When prefabricated steel extension rings are furnished, they shall be either of the one-piece or two-piece type as necessary for the amount of adjustment. They shall be installed in accordance with the manufacturer's instructions.

If the adjustment involves lowering the top of a manhole or inlet, a sufficient depth of brick courses or concrete shall be removed to permit reconstruction on a batter not exceeding 1 inch horizontal to 2 inches vertical. In the case of brickwork, the mortar shall be cleaned from the top course of brick remaining in place and from all brick to be re-used and the manhole or inlet rebuilt to the original top dimensions. The manhole or inlet ring, cover, plate, or grate shall then be installed with top conforming to the proposed new surface of street or grading as the case may be.

If the adjustment involves raising the elevation of the top of manhole or inlet, the top course of brick shall be cleaned of mortar and built up vertically to the new elevation using new brick, brick salvaged from other manhole or inlet adjustments, or Class "A" Concrete, and the ring, cover, plate, or grate installed with top conforming to the proposed new surface of street or grading as the case may be.

If abandonment of an inlet or manhole is required, it shall be removed to an elevation a minimum of one foot below subgrade elevation or as otherwise indicated on the plans, and capped or backfilled from the flow line to subgrade with special sewer backfill as specified in the Item, "Excavation and Backfill for Sewers".

If capping of an inlet or manhole is required by the plans, the capping shall be in accordance with the details shown on the plans.

All workmanship and finish shall be in accordance with the applicable provisions of the Item, "Manholes and Inlets".

Excavation and backfill shall conform to the requirements of the Item, "Excavation and Backfill for Sewers".

479.4. Measurement. Manholes or inlets completely adjusted, abandoned, or capped as prescribed above, will be measured by the unit of each manhole or inlet adjusted. The excavation and backfill involved will not be measured for payment.

479.5. Payment. Each manhole or inlet adjusted, measured as prescribed above, complete in accordance with these specifications, will be paid for at the unit price bid for "Adjusting Manholes", "Adjusting Inlets", or "Adjusting Manholes and Inlets", as the case may be, which price shall be full compensation for furnishing all required materials, including backfill as required, excavation, tools, labor, equipment, and incidentals required to complete the work.

ITEM 480

CLEANING EXISTING STRUCTURES

480.1. **Description.** This item shall govern for the removal of all extraneous material within the limits of the existing structures at locations shown on the plans.

480.2. **Construction.** The work may be performed by hand or mechanical methods or a combination of methods in order to completely expose all inside surfaces of culvert barrels and/or culvert pipes.

The work shall be performed in a manner which will not move the structure out of position nor damage any portion thereof. Any movement or damage done shall be corrected by repairing or replacing the damaged or moved portion of the structure as directed by the Engineer, at the entire expense of the Contractor.

Material removed from the structure shall be disposed of by the Contractor. If approved by the Engineer, material removed may be placed on the roadway slopes adjacent to the structure.

The Contractor shall so schedule this work that final cleaning shall be performed just prior to final acceptance of the project.

480.3. **Measurement.** The work, as prescribed by this item, will be measured by each structure cleaned, regardless of the number of barrels and/or lines of pipe at any one location, or by the cubic yard for material removed. If measurement is by the cubic yard, the volume of material to be removed will be computed by the method of average end areas.

480.4. **Payment.** All work performed and measured as provided under Measurement will be paid for at the unit price bid per each, and/or per cubic yard, for "Cleaning Structures" which price shall be full compensation for all excavation, disposal of excavated material, for furnishing all labor, tools, equipment and incidentals necessary to complete the work.

ITEM 481

PVC PIPE

481.1. **Description.** This item shall govern for the furnishing and installing of PVC pipe, including all fittings, painting when necessary, and all necessary incidentals to do the work in accordance with the plans and this specification.

481.2. **Material.** The plastic pipe and fittings shall meet the requirements of ASTM D 3034 "Standard Specification for Type PSM Poly

Vinyl Chloride (PVC) Sewer Pipe and Fittings" and the pipe shall be of SDR-35 of the nominal pipe size shown on the plans.

The Contractor shall furnish manufacturer's certification that the pipe and fittings furnished to the project meet the ASTM requirements above.

Pipe and fittings shall be free from defects which, in the judgement of the Engineer, would hinder their ability to function as planned.

The dimensions of the PVC pipe shall be as shown on the plans. The fittings supplied shall properly fit the pipe supplied and shall be of the same color as the pipe prior to required painting.

481.3. **Construction Methods.** The pipe shall be installed at the locations and to the lines, grades and dimensions shown on the plans or as revised by the Engineer.

All fittings shown on the plans and any other fittings necessary to properly install the pipe, including splice fittings, if necessary, shall be attached to the pipe by solvent welding according to the manufacturer's recommendations.

Splicing will not be allowed unless the required length of a straight section of pipe exceeds 30 feet. This requirement may be waived by the Engineer for special conditions.

Devices required to attach the pipe to portions of structures or to other types of pipe shall be as shown on the plans or as approved by the Engineer.

Any excavation and backfilling required for installation of the pipe shall be performed according to the Item, "Structural Excavation", or the Item, "Excavation and Backfill for Sewers" as the case may be.

After installation all pipe and fittings which will be exposed to view in the completed structure shall be cleaned and painted as specified on the plans.

481.4. **Measurement.** PVC pipe will be measured by the linear foot along the centerline of the pipe as installed, for the various sizes required. Any excavation and backfill required will not be measured for payment, but shall be subsidiary to this item.

481.5. **Payment.** Payment for PVC pipe measured as prescribed above will be made at the unit price bid per linear foot for "PVC Pipe" of the various sizes required. Payment shall be full compensation for furnishing and installing the PVC pipe, for all fittings, hangers, clamps, straps, anchors, guard plates, excavation and backfill, painting, labor, tools, equipment and incidentals necessary to complete the work.

ITEM 483

SCARIFYING CONCRETE BRIDGE SLAB

483.1. Description. This item shall govern for scarifying concrete bridge slabs to the depths required by the plans, and for the removal and disposal of the cuttings produced.

483.2. Equipment. The scarifying equipment shall be of the rotary or drum type, and shall be self-propelled with sufficient power, traction, and stability to maintain accurate depth of cut and slope. It shall be capable of accurately establishing profile grades along each edge of the machine by referencing from an existing surface by means of a ski or matching shoe, or from an independent grade control. It shall have an automatic system for controlling cross slope at a given rate, and shall have a manual system which can uniformly vary the depth of cut while the machine is in motion. It shall be equipped with means to control dust created by the cutting action.

Unless otherwise permitted by the Engineer, the machine shall be equipped with integral loading and reclaiming devices to immediately remove the cuttings from the surface of the roadway and discharge them into a truck, all in one operation.

In any case adequate equipment (mechanical street sweepers, loaders, trucks, water trucks, etc.) and personnel shall be provided to insure that all cuttings are removed within the time limit established by the Engineer, or as required by the plans.

483.3. Construction Methods. The existing concrete slab at locations shown in the plans or designated by the Engineer shall be scarified to the depths shown in the plans. The depth shall be measured from the level of the existing surface to the high points on the scarified surface.

The Engineer may require that the concrete scarifying operation be referenced from an independent grade control in those areas where he deems this type of control to be appropriate. For this type of operation, the independent grade control shall be established and maintained by the Contractor in a manner acceptable to the Engineer.

The cuttings shall be placed in a disposal site acceptable to the Engineer.

483.4. Surface Texture. After the existing concrete slab has been scarified, it shall present a uniform rough surface suitable for bonding a concrete overlay. It is the intent of this specification that the surface have a chipped appearance rather than a ground appearance.

483.5. Measurement. This item will be measured by the square yard of scarified area of existing concrete surfaces.

Uniform cuts and tapered cuts of varying depth made in accordance with the plans will be measured by the square yard for the nominal depth of scarifying specified.

483.6. **Payment.** Payment for "Scarifying Concrete Bridge Slab", measured as prescribed above, will be paid for at the unit price bid per square yard, which price shall be full compensation for removing all material to the depths shown, texturing the surface, loading, hauling, unloading, and satisfactorily storing or disposing of the cuttings, and for all labor, tools, equipment, manipulation and incidentals necessary to complete the work.

ITEM 485

WET SANDBLASTING

485.1. **Description.** This item shall govern for furnishing of materials, equipment, and application of wet sandblasting in the cleaning of an existing concrete structure. The work described under this item shall include the thorough cleaning of concrete surfaces including the removal of disintegrated and spalled concrete.

485.2. **Materials.** The material to be used shall be finely graded, absolutely clean particles of silica sand. Unless otherwise shown on the plans, the size of the particles shall completely pass a 30 mesh sieve and be completely retained on the 40 mesh sieve. The water used shall be fresh and clean. Compressed air, when used, shall be filtered.

485.3. **Equipment.** The equipment shall consist of an air compressor, piping, hoses equipped with a special nozzle to combine water, sand and compressed air, and a material hopper capable of regulating sand flow. The hopper shall have controls which will permit immediate stoppage of sand flow, to allow the surface to be rinsed free of surface contaminants by combined air and water pressure.

Other equipment which will provide an acceptably clean surface may be used with prior approval of the Engineer.

485.4. **Construction Methods.** Minimum air pressure at the nozzle shall be 70 psi. Water pressure at the water ring shall be normal hydrant pressure (±100 psi). The sand shall be blown into the vortex of a stream of water. The minimum sand nozzle opening shall be ¼ inch. High pressure water blast, with or without sand, will be permitted if it can be demonstrated to the satisfaction of the Engineer that the method will produce the required cleaning.

485.5. Experience of Workmen. Only experienced nozzlemen shall be employed. No nozzlemen will be termed experienced unless he has done satisfactory work of a similar type for a sufficient period of time to be fully qualified to properly perform the work in accordance with this specification.

485.6. Measurement and Payment. Work performed and materials furnished as prescribed by this item shall not be measured or paid for directly but shall be considered subsidiary to the various bid items in the contract.

ITEM 492

TIMBER PRESERVATIVE AND TREATMENT

492.1. Description. This item shall govern for the preservative, and for the seasoning, preparation and treatment of piles, posts, timbers, lumber and service poles when treatment is specified on the plans or called for in the specifications. Unless otherwise specified on the plans, the preservative and retention shall be as shown in Table 1 of this item.

492.2. Materials. Except as otherwise provided herein, American Wood-Preservers' Association (AWPA) Standard Specification shall govern for materials and methods of treatment, including seasoning, incising, preservatives, treatment and inspection for treatment. Pretreated stock will not be accepted by the Inspector except in emergencies. In such case, special permission must be obtained from the Engineer.

492.3. Paintability. All guard posts and sign posts shall be steam cleaned after treatment to assure paintability. Timber other than guard posts and sign posts shall be cleaned for paintability when so required by the plans.

492.4. Treatment of Cuts. When it is necessary to bore holes or to cut pressure treated materials after treatment, or when any treated surface is badly scarred, the hole, cut or scarred surface shall be given a multi-application of a concentrated solution of the same type preservative as that used in the original treatment, as specified in AWPA Standard M4. The supplier of the timber products shall furnish suitable liquid preservative for field treatment upon request from the Engineer. Heating of the preservative and method of application to the damaged or cut areas shall be as specified in AWPA Standard M4.

492.5. Inspection. Inspectors representing the Department shall have access to all parts and facilities of plants used in the conditioning and treating of forest products. The supplier shall provide the necessary assistance for the proper inspection of the materials being furnished.

Product	Creosote (AWPA P1) Lbs. Per Cu. Ft.	Creosote Coal Tar Solution (AWPA P12) Lbs. Per Cu. Ft.	Penta-chlorophenol (AWPA P8 & P9) Lbs. Per Cu. Ft.	(1) ACA CCA (AWPA P5) Lbs. Per Cu. Ft.	Treating Specifications (AWPA Standard Specification Numbers)
TIMBER PILING					C3
For Land or Fresh Water Use (Including Foundation Piles)					
Southern Pine	12 by Assay (0 to 3.0" Zone)		0.6 Dry Penta by Assay (0 to 3.0" Zone)		
Douglas Fir	17 by Assay (0 to 1.0" Zone)		0.85 Dry Penta by Assay (0 to 1.0" Zone)		
For Use in Coastal Waters					
Southern Pine	20 by Assay (0 to 3.0" Zone)	20 by Assay (0 to 3.0" Zone)			
West Coast Douglas Fir	20 by Assay (0 to 2.0" Zone)				C18
GUARD FENCE POSTS-ROUND					C5
Southern Pine	8 by Assay (0.5 to 2.0" Zone)		0.4 Dry Penta by Assay (0.5 to 2.0" Zone)	0.4 by Assay (0.5 to 2.0" Zone)	
POSTS FOR WIRE FENCE-ROUND					C5
Southern Pine	8 by Assay (0 to 1.0" Zone)		0.4 Dry Penta by Assay (0 to 1.0" Zone)	0.4 by Assay (0 to 1.0" Zone)	
TIMBER DELINEATOR POSTS-ROUND					C5
Southern Pine	8 by Assay (0 to 1.0" Zone)		0.4 Dry Penta by Assay (0 to 1.0" Zone)	0.4 by Assay (0 to 1.0" Zone)	
TIMBER FOR SIGN POSTS	8		0.4	0.4	C5
BRIDGE TIMBERS & FENDER TIMBERS					C2
Southern Pine	12		0.4	0.4	
Douglas Fir	8		0.4	0.4	
LUMBER OTHER THAN BRIDGE TIMBERS & FENDER TIMBERS					C9
Southern Pine	8		0.4	0.4	
Douglas Fir	8		0.4	0.4	
SERVICE POLES					C4
Southern Pine	8 by Gauge or weight		0.4 by Gauge or weight	0.6 by Gauge or weight	

NOTE: (1) ACA: Ammoniacal Copper Arsenite
CCA: Chromated Copper Arsenate

Table 1
MINIMUM NET RETENTION OF PRESERVATIVE

492.6. **Identification.** Each piece or bundle of treated timber products shall bear a legible brand mark or tag indicating the name of the treater, date of treatment and the specification symbol to which the treatment conforms.

492.7. **Measurement and Payment.** Payment for all work prescribed herein will be included in the unit prices bid for "Timber for Structures", "Timber Piling", "Timber Post Guard Fence", or other Timber Products, as the case may be.

ITEM 495

RAISING EXISTING STRUCTURE(S)

495.1. **Description.** This item shall govern for raising an existing structure(s) as indicated on the plans.

495.2. **Materials.** Materials for steel pedestals and fabric bearing pads shall comply with the requirements of the Item, "Metal for Structures" and the Item, "Steel Structures". Materials for repairing concrete damaged during the Contractor's raising operations shall be in accordance with the Item, "Concrete Structures" and the Item, "Concrete for Structures". Anchor bolts or portions of anchor bolts being replaced shall conform to the requirements of the Item, "Metal for Structures". New elastomeric bearings, when required by the plans shall be in accordance with the Item, "Elastomeric Materials".

495.3. **Construction Methods.** The work under this item shall be done in accordance with the plans, these specifications, and as directed by the Engineer. The Contractor shall be responsible for any damage to the structure caused by his operation in the process of raising the bridge and shall repair such damage without additional compensation.

Before starting the work of raising the bridge, the Contractor shall submit to the Engineer for his approval detail plans showing the method, materials and equipment proposed for this item of work. Such approval shall not relieve the Contractor of any responsibility for the successful completion of the work nor for any liability for replacement of damaged portions of the structure should the approved method result in damage to the structure.

The proposed construction method shall conform to the following:

(1) The arrangement of points of load application shall be such that the allowable stresses for bearing, shear and bending will not be exceeded for any material required to carry the load. An impact factor of 100 percent of the dead load shall be added in calculating bearing and shear.

(2) Suitable cribbing, falsework or other support shall be provided to prevent the various spans or units from excessive dropping due to jack failure or other causes during raising operations and until the span or unit is released to the finished substructure.

(3) All spans shall be jacked from the existing bent cap, or from temporary falsework, unless specifically noted otherwise in the plans.

(4) For prestressed concrete beam simple spans.

a. Raising the prestressed beam spans by jacking against the end diaframs or against the bottom of the slab will be permitted provided extreme care is taken to reduce sudden overloads; a minimum of two jacks per beam spacing per bent will be required.

b. Vertical forces for lifting the unit shall be applied to the bottom flange of the existing beams, end diaframs and/or bottom of the slab, so that one end of the span is raised simultaneously. One end of a simple span shall not be raised more than 6 inches above the opposite end at any time.

(5) For continuous I-beam or plate girder units.

a. Vertical forces for lifting each span or unit shall be applied to the bottom flange of the beams or to structural steel struts welded to webs of beams, as near the ends of the spans or centerline of bearings as possible, and in such a manner as to raise the entire span or unit simultaneously. At no time during raising operations for the continuous steel unit shall the relative elevations of the various points on the unit deviate more than one and one half inches (1½") from the existing relative elevations.

b. Prior to raising the existing structure, all anchor bolt nuts shall be loosened and removed or cut to allow free vertical movement of the structure.

c. All anchor bolts damaged, cut off, or missing shall be replaced by either butt welding to existing bolts or by drilling into the existing concrete cap a minimum of 12 inches and grouting in new bolts of the same diameter as the existing bolts. All anchor bolt nuts damaged or lost shall be replaced.

d. All welding required shall conform to the requirements of the Item, "Structural Welding".

(6) Adequate external guides or force shall be provided to assure true vertical lifting and prevent drifting of the unit during the jacking operation.

495.4. Measurement. All work and materials required for "Raising Existing Structure" will be measured by the lump sum, except that material for steel pedestals will be measured by the pound in accordance with the Item, "Metal for Structures".

495.5. Payment. The work performed and material furnished under this item and measured as provided under "Measurement" will be paid for at the unit price bid for "Raising Existing Structure", which price shall be full compensation for all shoring, falsework, jacking, labor, tools and all incidental equipment required to complete the job and for furnishing all material except new pedestals. Pedestals will be paid for in accordance with the Item, "Metal for Structures". New fabric pads and/or elastomeric bearings when required will be subsidiary to the unit price bid for "Raising Existing Structure".

ITEM 496

REMOVING OLD STRUCTURES

496.1. Description. This item shall provide for the removal and disposal of old structures or portions of old structures, as noted on the plans, and shall include all excavation and backfilling necessary to complete the removal. The work shall be done in accordance with the provisions of these specifications.

496.2. Method of Removal.

Culverts or Sewers. Pipe for reuse shall be removed by careful excavation of all material on the top and sides so that the pipe will not be damaged. Removal of sewer appurtenances shall be included for removal with the pipe. Those pipe which are deemed unsatisfactory for reuse by the Engineer may be removed in any manner the Contractor may select.

Concrete Structures. Concrete structures or concrete portions of structures shall be removed by blasting and/or sledging the concrete into sizes not larger than one cubic foot.

When an existing concrete structure is to remain in use, the removal of any portions thereof shall be in accordance with Article 430.3.

Concrete portions of structures below the permanent ground line, which will not interfere in any manner with the proposed construction, may be left in place, but removal shall be carried at least 2 feet below the permanent ground line and neatly squared off. Reinforcement shall be cut off close to the concrete.

Steel Structures. Steel structures or steel portions of structures shall be dismantled in sections as determined by the Engineer. The sections shall be

of such weight and dimensions which permit convenient handling, hauling, and storing. Rivets and bolts connecting steel railing members, steel beams of beam or girder spans and steel stringers of truss spans shall be removed by cutting the heads with a "cold cut" then punched or drilled from the hole, or by a method that will not injure the members for re-use and will meet the approval of the Engineer. The removal of rivets and bolts from connections of truss members, bracing members, and other similar members in the structure will not be required unless specifically called for on the plans or special provisions and the Contractor shall have the option of dismantling these members by flame-cutting the members immediately adjacent to the connections. Flame-cutting will not be permitted when plans or special provisions call for the structure unit to be salvaged in such a manner to permit re-erection. In such case all members shall be carefully dismantled without damage and matchmarked with paint in accordance with the diagram furnished by the Engineer prior to dismantling, and all rivets and bolts shall be removed from the connections in the manner specified in the first portion of this paragraph.

Timber Structures. Timber structures or timber portions of structures to be reused shall be removed with as little damage to the timber as possible. All bolts and nails shall be removed from such lumber as deemed salvable by the Engineer.

Unless otherwise specified on the plans, timber piles shall be either pulled or cut off at a point not less than 2 feet below ground line, with the choice between these two methods resting with the Contractor.

Brick or Stone Structures. Brick or stone structures or stone portions of structures shall be removed by blasting and/or sledging the masonry into sizes not larger than one cubic foot.

Portions of such structures below the permanent ground line, which will not in any manner interfere with the proposed construction, may be left in place, but removal shall be carried at least 2 feet below the permanent ground line and neatly squared off.

Salvage. All material such as pipe, timbers, railings, etc., which the Engineer deems as salvable for reuse, and all structural steel shall be carefully placed in neat piles along the right of way at convenient loading points which will not intefere with traffic or construction. All of these materials shall be the property of the Department.

The I-beams, girders, stringers, etc., which are to be put in storage or specified for reuse, shall be blocked off the ground in an upright position to protect the members against damage.

Materials, other than structural steel, which are not deemed salvable by the Engineer, shall become the property of the Contractor and shall be

removed to suitable disposal sites off of the right of way arranged for by the Contractor, or otherwise disposed of in a manner satisfactory to the Engineer.

Where temporary structures are necessary for a detour adjacent to the present structure, the Contractor will be permitted to use the material in the old structure for the detour structure, but he shall dismantle and stack or dispose of the material as required above as soon as the new structure is opened for traffic.

The bidder's attention is called to Article 7.9 regarding responsibility in the use of explosives.

Backfill. All excavation made in connection with this item and all openings below the natural ground line caused by the removal of old structures or portions thereof shall be backfilled to the level of the original ground line, unless otherwise provided on the plans.

That portion of the backfill which will support any portion of the roadbed or embankment shall be placed in layers of the same thickness as those required for placing embankment. Material in each layer shall be wetted uniformly if required and shall be compacted to the density required in the adjoining embankment. In places inaccessible to blading and rolling equipment, mechanical or hand tamps or rammers shall be used to obtain the required compaction.

That portion of the backfill which will not support any portion of the roadbed or embankment shall be placed as directed by the Engineer in such manner and to such state of compaction as will preclude objectionable amounts of settlement.

496.3. Measurement. The work as provided for by this item shall be measured as each individual structure to be removed, except that pipe sewers may be measured as each structure, or may be measured by the linear foot. When measured by either method, removal shall include all appurtenances thereto.

496.4. Payment. The work as prescribed for in this item shall be paid for at the unit price bid each for "Removing Old Structures, Large", "Removing Old Structures, Small', or "Removing Old Structures (Pipe)", per linear foot, which price shall be full compensation for all work, labor, tools, equipment, excavation, backfilling, materials, and incidentals necessary to complete the work.

ITEM 497

DISPOSAL OF SALVAGEABLE MATERIAL

497.1. **Description.** This item shall govern for the sale to the Contractor of all structural steel, steel railing, timber or any other material salvaged from existing structures which have been removed in accordance with the Item, "Extending Concrete Structures", the Item, "Removing Old Structures" or as otherwise stated in the plans. The approximate quantity of materials to be salvaged will be shown on the plans. It will be the Contractor's responsibility to have all materials designated for sale removed from the site prior to final acceptance of the project.

497.2. **Measurement.** All salvaged structural steel, steel railing, timber or other material designated for sale to the Contractor will be measured as a lump sum unit.

497.3. **Payment.** The Contractor shall pay to the State Department of Highways and Public Transportation the lump sum bid for "Salvaged Material (Credit Item)". The amount bid will be deducted from the Contractor's estimate upon removal of the salvaged materials from the project site.

ITEM 498

PLANT INSPECTION LABORATORY
(Equipped)

498.1. **Description.** This item shall govern for the furnishing of an inspection laboratory. A commercial fabricating plant from which the Contractor proposes to obtain prestressed concrete products, and any job site prestressing plant (pretensioning or post-tensioning), shall provide an inspection laboratory, available for the use of the State, equipped as specified herein.

498.2. **General Requirements.** The laboratory shall be provided prior to beginning the casting of any prestressed concrete units required by the contract.

The building and equipment shall be maintained so that it will continue to function properly for its intended use.

Department personnel and the Contractor's personnel shall not be housed in the same office or laboratory space.

498.3. Laboratory Building.

(1) **Commercial Fabricating Plants.** The building furnished shall be approved by the Engineer. It shall be partitioned to provide a separate laboratory and office. Laboratory and office space for plant operations requiring two inspection personnel shall be not less than 400 square feet. For operations requiring three or more inspection personnel, the laboratory and office space shall be not less than 600 square feet. The building shall be water tight, adequately lighted, heated and ventilated with restroom facilities incorporated. Curing, capping and testing facilities for concrete cylinders may be housed in the same building but partitioned off from the laboratory and office space, or contained in space convenient to the office and laboratory. If curing, capping and testing facilities are housed in the same building the space required for these facilities will be in addition to the above requirements for laboratory and office space. The building shall be situated to give visibility to plant operations unless otherwise approved by the Engineer.

(2) **Job Site Plant.** A laboratory building shall be furnished for inspection of prestressing operations. The building shall be a Type C structure as described in the Item, "Structure for Field Office and Laboratory", and shall be approved by the Engineer. It shall be water tight; well lighted, heated and ventilated; equipped with restroom facilities, and situated so the plant operations are visible therefrom, unless otherwise approved by the Engineer.

498.4. Equipment.

(1) **Commercial Fabricating Plants.** Equipment furnished shall be as follows:

(a) A sink with running water and adequate work tables.

(b) A compression machine meeting the requirements of ASTM Designation C39 except that the dial shall be graduated in 500 lb. increments, and the load read to the nearest increment.

(c) A scale or balance as required by Test Method Tex-401-A.

(d) For moisture and specific gravity determination, a gas pressure moisture content tester, a supply of 1 and 2 quart glass jars, pycnometer tops, wide spout funnel and siphon bulb.

(e) A complete set of sieves as required by Test Method Tex-401-A.

(f) A mechanical sieve shaker, to accommodate the size of sieves furnished above.

(g) A thermostatically controlled electric or gas oven capable of maintaining a temperature of 230 F ± 9 F at loaded capacity.

(h) A minimum of 12 permanent cylinder molds for each line to be produced for each day's run. Molds shall be 6 inches by 12 inches, made of cast iron, sheet iron, or tubing, a minimum of one-fourth of an inch thick, and equipped with quick acting clamps, or heavy thumb screws, for assembling and disassembling. Steel base plates shall be provided with means for securing to the mold. Either glass or steel top plates will be required. The assembled mold and base plate shall be mortar tight. The molds shall not vary from the prescribed diameter by more than 1/16 inch nor from the prescribed height by more than 1/4 inch.

(i) One small shovel and trowel for making concrete cylinders.

(j) Six round aggregate pans.

(k) Capping equipment meeting the requirements of ASTM Designation: C617.

(l) Equipment for determining the diameter of a cylinder to the nearest 0.01 inch.

(m) A thermostatically controlled curing tank, capable of maintaining water temperature between 70 F and 90 F, and large enough to accommodate a minimum of six cylinders for each placement for at least 14 days of consecutive run.

In lieu of a curing tank, a moist cabinet and/or room meeting the requirements of ASTM Designation: C511.

(n) Equipment as required by Test Method Tex-404-A for running unit weight.

(o) A slump mold and tamping rod as required by Test Method Tex-415-A.

(p) All of the equipment required for performing the sand equivalent test in Test Method Tex-203-F.

(q) If elevated temperature curing is used, one remote reading thermometer and one recording thermometer will be required for each 100-foot length of casting bed in simultaneous use. At least one standby thermometer of each type will be required for emergency use. The same equipment shall be used from November 1 thru March 31 for any kind of curing method.

(2) **Job Site Operations.** Equipment items, (a), (b), (h), (k), (l), (m), and (q) as required above for Commercial Fabricating Plants shall be furnished by the Contractor. Other items required shall be furnished by the State. In lieu of providing a compression testing machine as described above, the Contractor may provide, at his expense, to have test cylinders tested by an approved Commercial Laboratory. Moisture content of the aggregate may be determined by the pycnometer method.

(3) **General.** All equipment furnished shall be subject to the approval of the Engineer. In lieu of the above and with written permission of the Engineer, the Contractor may provide other suitable equipment and/or facilities for testing.

All equipment shall be calibrated properly and housed in a weatherproof enclosure. Recalibrations of any equipment furnished by the Contractor shall be done when directed by the Engineer at the expense of the Contractor.

498.5. Measurement and Payment. No payment will be made to the Contractor for the work, materials or equipment involved in providing the "Plant Inspection Laboratory (Equipped)" for central fabricating plants or for job site operations, but will be considered subsidiary to the various bid items in the contract.

ITEM 500

MOBILIZATION

500.1. Description. This item shall consist of the mobilization of personnel, equipment and supplies at the project site in preparation for beginning work on other contract items. Mobilization shall include, but is not limited to, the movement of equipment, personnel, material, supplies, etc. to the project site and the establishment of office and other facilities necessary prior to beginning the work.

500.2. Measurement. Measurement of the Item, "Mobilization" as specified herein will be by the "Lump Sum", as the work progresses.

500.3. Payment. Partial payments of the "Lump Sum" bid for mobilization will be as follows. The adjusted contract amount for construction items as used below is defined as the total contract amount less the lump sum bid for Mobilization.

(1) When 1% of the adjusted contract amount for construction items is earned, 50% of the mobilization lump sum bid or 5% of the total contract amount, whichever is less, will be paid.

(2) When 5% of the adjusted contract amount for construction items is earned, 75% of the mobilization lump sum bid or 10% of the total contract amount, whichever is less, will be paid. Previous payment under this item will be deducted from the above amount.

(3) When 10% of the adjusted contract amount for construction items is earned, 90% of the mobilization lump sum bid or 15% of the total contract amount, whichever is less, will be paid. Previous payments under this item will be deducted from the above amount.

(4) Upon completion of all work under this contract, payment for the remainder of the lump sum bid for "Mobilization" will be made.

ITEM 502

BARRICADES, SIGNS AND TRAFFIC HANDLING

502.1. Description. This item shall consist of providing, installing, moving, replacing, maintaining, cleaning and removing upon completion of

work, all barricades, signs, barriers, cones, lights, signals and other such type devices and of handling traffic as indicated in the plans or as directed by the Engineer.

502.2. **Construction Methods.** All barricades, signs and other types of devices listed above shall conform to details shown in the plans or those indicated in the Texas Manual on Uniform Traffic Control Devices (TMUTCD).

For this project a Traffic Control Plan (TCP), responsive to the Texas MUTCD, has been established. The Contractor may propose his own TCP. If his plan is approved by the Engineer, it may be used. Prior to beginning work, the Contractor shall designate, in writing, a competent person who will be responsible and available on the project site or in the immediate area to insure compliance with the TCP. The Engineer will designate a qualified Departmental person to observe implementation and who will have authority to assure compliance with the TCP.

502.3. **Measurement.** Barricades, Signs and Traffic Handling will be measured by the unit of measure "month" as indicated in the plans.

502.4. **Payment.** The work and materials as prescribed by this item, measured as provided under "Measurement" will be paid for at the unit price bid for "Barricades, Signs and Traffic Handling". This price shall be full compensation for furnishing all labor, materials, supplies, equipment and incidentals necessary to complete the work as specified.

Payment will be made on the following basis:

(1) The total payment for this item will not exceed 10 percent of the total contract amount prior to the final estimate. The portion of the contract amount for this item in excess of 10 percent of the total contract amount will be paid on the final estimate.

(2) Payment for this item will begin on the first payable monthly construction estimate after barricades, signs and traffic handling devices have been installed in accordance with the Traffic Control Plan and construction has begun.

(3) Monthly payment will be made each succeeding month for this item provided the barricades, signs and traffic handling devices have been installed and maintained in accordance with the Traffic Control Plan until the contract amount for Barricades, Signs and Traffic Handling has been paid unless adjusted by paragraph (4).

(4) The quantity under this item will not exceed the total plan quantity except when additional work is added by an approved field change. No increase in quantity will be allowed for this item unless the additional quantity is included in the field change adding the additional work. Also when

work is suspended for the convenience of the Department, through no fault of the Contractor, additional quantity may be paid when approved by field change.

(5) An overrun of the plan quantity for this item will not be allowed for approving designs, testing, material shortages, closed construction seasons, curing periods, test periods, failure to complete the work prior to payment of the amount allowed by (1) and (3) above nor delays caused directly or indirectly by requirements of the contract.

(6) If the contract is completed prior to payment of the amount allowed by (1) and (3) above, the balance due will be paid on the final estimate. When the plans establish pay items for particular work called for in the TCP and/or plans, that work will be measured and paid for under the governing items.

ITEM 504

STRUCTURE FOR FIELD OFFICE AND LABORATORY

504.1. Description. This item shall govern for the erection or furnishing of a building to be used by the Engineer during the construction of the project as a Field Office, Field Laboratory or Field Office and Laboratory.

504.2. General Requirements. The types and number of structures required will be as shown on the plans.

The building shall be provided immediately after work on the project is begun and shall remain in place until the project is accepted by the State as complete, unless its earlier removal is authorized by the Engineer. It shall be floored and roofed, weather-tight and constructed in a workmanlike manner. All windows shall be screened and a screen door provided in addition to the regular door.

The building shall be constructed or furnished near the site of the work, at a location acceptable to the Engineer and shall be an independent unit, detached from any office, storage or warehouse building occupied by the Contractor. The building shall be for the sole use of the Engineer.

Should the building be destroyed or damaged in any manner, except through causes due to negligence of the Engineer, the Contractor shall immediately restore it. Upon the completion of the project the building shall be removed from the project site.

Unless specified otherwise on plans, the buildings shall be electrically wired for lights, outlets and plugs and piped for water and fuel as directed by the Engineer. The Contractor shall furnish and install equipment, electricity, water, fuel, adequate air conditioning, heating and an exhaust fan as

directed by the Engineer. A substantial workbench and a table, each no less than 3 feet wide and 8 feet long, shall be provided. The building shall be serviced with sewer or septic tank with connections and shall contain a rest room properly partitioned and furnished with, as a minimum, a flush toilet and a lavatory. When approved by the Engineer, a portable toilet may be furnished and serviced in lieu of a flush toilet.

A rental building meeting specified minimum requirements, at a suitable location and acceptable to the Engineer, may be furnished by the Contractor instead of the individual buildings required by this item.

504.3. **Type of Structure.**

(1) **Type A Structure, Field Laboratory.** This building shall be not less than 10 feet by 20 feet and 8 feet high. The building shall be partitioned into a minimum of two rooms, each room furnished with an exterior door and a minimum of two windows. The building shall contain a small platform not less than 18 inches long and 12 inches wide mounted on a post of not less than 6-inch by 6-inch lumber, extending through the floor and firmly fixed in the ground.

(2) **Type B Structure, Field Office and Laboratory.** This building shall provide a minimum of five hundred forty (540) square feet of gross floor area. The floor area will be partitioned into a minimum of three rooms and furnished with doors, floor covering, and a minimum of two windows in each room. The building shall have two exterior doors.

(3) **Type C Structure, Field Office.** This building shall not be less than 12 feet wide by 32 feet long and 8 feet high. The floor area will be partitioned into a minimum of two rooms and furnished with doors, floor covering, and a minimum of 2 windows in each room. The building shall have 2 exterior doors.

(4) **Type D Structure.** This building shall be as described on plans.

504.4. **Measurement and Payment.** Work performed and materials furnished as prescribed by this item will not be measured nor paid for directly but will be considered subsidiary to the various bid items in the contract.

ITEM 506

TEMPORARY EROSION, SEDIMENT AND WATER POLLUTION CONTROL

506.1. **Description.** This item shall consist of temporary soil erosion, sediment and water pollution control measures deemed necessary by the Engineer for the duration of the contract. The temporary pollution-control provisions contained herein shall be coordinated with the permanent soil-

erosion-control features specified elsewhere in the contract to the extent practical to assure economical, effective and continuous erosion control throughout the construction and post construction period. These control measures shall at no time be used as a substitute for the permanent control measures unless otherwise directed by the Engineer and they shall not include measures taken by the Contractor at his expense under Subarticles 4(a) through (e) to control conditions created by his construction operations. The temporary measures shall include dikes, dams, berms, sediment basins, fiber mats, jute netting, temporary seeding, straw mulch, asphalt mulch, plastic liners, rubble liners, baled-hay retards, dikes, slope drains and other devices specified by the Engineer.

506.2. Items of Work and Materials. The estimated items of temporary erosion control will be indicated on the plans; however, the Engineer may increase or decrease the quantity of these Items as the need arises. The materials will be specified in the plans, standard specifications, special specifications or special provisions. The Engineer may specify other materials and work as the need arises.

506.3. Preconstruction Conference. Prior to the start of the applicable construction, the Contractor shall submit for approval his schedules for accomplishment of soil-erosion-control work and his plan to keep the area of erodible-earth material to a minimum. He shall also submit for acceptance his proposed method of soil-erosion control on construction and haul roads and material sources and his plan for disposal of waste materials. No work shall be started until the soil-erosion control schedules and methods of operations have been reviewed and approved by the Engineer.

506.4. Construction Requirements. The Engineer has the authority to define erodible earth and the authority to limit the surface area of erodible-earth material exposed by preparing right of way, clearing and grubbing, the surface area of erodible-earth material exposed by excavation, borrow and embankment construction operations (except for commercial operations) and to direct the Contractor to provide temporary pollution-control measures to prevent contamination of adjacent streams, other watercourses, lakes, ponds or other areas of water impoundment. Such work may involve the construction of temporary berms, dikes, dams, sediment basins, slope drains and use of temporary mulches, mats, seeding or other control devices or methods directed by the Engineer as necessary to control soil erosion.

The Contractor will be required to incorporate all permanent soil-erosion-control features into the project at the earliest practicable time as outlined in his accepted schedule. Temporary pollution-control measures shall be used to prevent or correct erosion that may develop during construction prior to installation of permanent pollution-control features, but are not associated with permanent control features on the project.

The Engineer will limit the area of preparing right of way, clearing and grubbing, excavation, borrow and embankment operations (other than in commercially-operated sources) to be proportional to the Contractor's capability and progress in keeping the finish grading, mulching, seeding and other such permanent pollution-control measures current in accordance with the accepted schedule. Should seasonal conditions make such limitations unrealistic, temporary soil-erosion-control measures shall be performed as directed by the Engineer. The amount of surface area of erodible-earth material exposed at one time shall not exceed 750,000 SF for each Excavation operation, 750,000 SF for each Material Source operation (other than from commercially-operated sources), 750,000 SF for each Preparing of Right of Way operation or 750,000 SF for each Clearing and Grubbing operation, unless otherwise shown on the plans or with prior approval by the Engineer in writing.

The Contractor shall maintain the top of the earth work in all roadway sections through all construction stages in such a manner as to permit the runoff of precipitation to the outer edges. When directed by the Engineer, earth berms shall be constructed along the top and/or bottom edges of embankment or cuts to intercept the runoff water at the close of the day's grading operations. Earth berms shall be compacted to the satisfaction of the Engineer. Temporary slope drain facilities shall be provided to carry the runoff to the bottom of the slopes. The slope drains may be of flexible or rigid construction, but shall be capable of being readily shortened or extended as the cut or fill progresses. Pipe and/or sheeting shall be provided at the entrance to the temporary slope drains, and where necessary, energy dissipators shall be provided at the outlet. Open drains shall be stabilized as necessary to prevent erosion. On embankments with flat slopes where slope drains are impractical, temporary grasses and/or mulch stabilization shall be constructed concurrently with the embankment formation.

Should preventive measures fail to function effectively, the Engineer will require the Contractor to act immediately to bring the erosion and siltation under control by whatever additional temporary means are necessary.

The Contractor shall also conform to the following practices and controls. All labor, tools, equipment and incidentals to complete the work will not be paid for directly but shall be considered as subsidiary work to the various items included in the contract.

(a) Waste or disposal areas and construction roads shall be located and constructed in a manner that will minimize the amount of sediment entering streams.

(b) Frequent fordings of live streams will not be permitted; therefore, temporary bridges or other structures shall be used wherever an apprecia-

ble number of stream crossings are necessary. Unless otherwise approved in writing by the Engineer, mechanized equipment shall not be operated in live streams.

(c) When work areas or material sources are located in or adjacent to live streams, such areas shall be separated from the stream by a dike or other barrier to keep sediment from entering a flowing stream. Care shall be taken during the construction and removal of such barriers to minimize the muddying of a stream.

(d) All waterways shall be cleared as soon as practicable of falsework, piling, debris or other obstructions placed during construction operations that are not a part of the finished work.

(e) The Contractor shall take sufficient precautions to prevent pollution of streams, lakes and reservoirs with fuels, oils, bitumens, calcium chloride or other harmful materials. He shall conduct and schedule his operations so as to avoid or minimize siltation of streams, lakes and reservoirs and to avoid interference with movement of migratory fish.

506.5. Measurement and Payment. In the event that temporary erosion, sediment and water-pollution-control measures required on projects are due to the Contractor's negligence, carelessness or failure to install permanent controls as a part of the work as scheduled, and are ordered by the Engineer, such work shall not be measured for payment but shall be performed by the Contractor at his own expense.

Where the work to be performed on projects involving earthwork, preparing right of way or clearing and grubbing, is not attributed to the Contractor's negligence, carelessness or failure to install permanent controls and falls within the specifications for a bid item in the contract, the units of work shall be measured and paid for in accordance with the appropriate specification. Should the work not be comparable to the work under the applicable contract bid items, the Contractor shall be ordered to perform the work on a force-account basis in accordance with Article 9.4., "Force Account", or by agreed unit prices.

In case of failure on the part of the Contractor to control soil erosion, pollution and/or siltation, the Engineer reserves the right to employ outside assistance or to use State forces to provide the necessary corrective measures. Such incurred direct costs plus project engineering costs will be deducted from any money due or to become due to the Contractor.

Temporary pollution control may include construction work outside the right of way where such work is necessary as a result of roadway construction such as material-source operations, haul roads and equipment-storage sites. Temporary pollution control work outside the right of way will not be measured for payment but shall be performed by the Contractor at his own expense.

ITEM 508

CONSTRUCTING DETOURS

508.1. Description. This item shall govern for the construction, maintenance and removal, if required, of detours of the length, and to the lines, grades and typical cross section shown on the plans. The work shall be done in accordance with the provisions of this specification.

508.2. Materials. The material for the required embankment shall be procured from the roadway excavation or borrow sources specified or as directed by the Engineer and sprinkled, compacted and shaped to conform to the typical section as specified or determined satisfactory and acceptable by the Engineer.

Any pipe required for temporary drainage across the detour will be furnished by the Contractor, and will become the property of the Contractor upon removal.

Permanent pipe for use on this project may be used temporarily for the detour, if the sequence of work will permit. When, in the opinion of the Engineer, pipe so used is damaged such that it will not be acceptable in the completed project, it will remain the property of the Contractor and shall not be incorporated in the final project.

508.3. Construction. The detours shall be constructed at the locations and to the lines and grades as shown on the plans and it shall be the entire responsibility of the Contractor to provide for the passage of traffic in comfort and safety as required or as directed by the Engineer.

Flexible base material shall be deposited on the subgrade, sprinkled, bladed, compacted and shaped to conform to the typical sections shown on the plans and as specified in the pertinent flexible base item.

The finished base shall receive surfacing where specified on the plans in accordance with the pertinent surfacing items.

After detours are no longer needed for traffic, the materials shall become the property of the Contractor to be disposed of off the project; however, if approved by the Engineer the materials may be disposed of by spreading along the adjacent roadway slopes. When specified on the plans, the materials (embankment, base and surfacing) may be reused within the roadway construction or stockpiled for future use, in which case the salvaging or stockpiling will be performed in accordance with the pertinent bid items.

508.4. Measurement. Constructing Detour as prescribed for this item will be measured by the method described as either Class 1, 2, 3 or 4 as follows and as specified on the plans.

When Class 1 measurement is specified, constructing detour will be measured by the 100-foot station of detour constructed complete in place.

When Class 2 measurement is specified, constructing detour will be measured as each detour constructed complete in place.

When Class 3 measurement is specified, constructing detour will be measured by the 100-foot station of completed detour. Embankment, flexible base and surfacing, where required, will be measured in accordance with the pertinent bid items.

When Class 4 measurement is specified, constructing detour will be measured as each completed detour. Embankment, flexible base and surfacing, where required, will be measured in accordance with pertinent bid items.

508.5. **Payment.** The work performed as prescribed by this item, measured as provided under "Measurement" will be paid for at the unit price bid for "Constructing Detours" of the class indicated on the plans. The price bid for Class 1 and/or Class 2 detours shall be full compensation for furnishing all material required including flexible base and surfacing; all work, labor, tools, equipment; all excavation and hauling of excavated material; all royalty, sprinkling and compacting; furnishing, installing and removing pipe; maintenance of detour; removal of detour where required, except as noted below; and incidentals necessary to complete the work. The price bid for Class 3 and/or Class 4 detours shall be full compensation for furnishing all work, labor, tools and equipment; furnishing, installing and removing pipe; maintenance of detour, removal of detour where required, except as noted below; and incidentals necessary to complete the work except that embankment, flexible base and surfacing will be measured and paid for in accordance with other pertinent bid items.

When the plans require the base and the surfacing to be removed and incorporated in the final roadway or stockpiled, after use on the detour, this work will be performed, measured and paid for in accordance with the pertinent bid items shown on the plans for salvaging, replacing or stockpiling materials.

When the plans require the embankment to be removed and incorporated in the final roadway or stockpiled, after use on the detour, this work will be performed, measured and paid for in accordance with the pertinent bid items shown on the plans.

ITEM 510

ONE-WAY TRAFFIC CONTROL

510.1. **Description.** This item shall govern for "One-Way Traffic Control" as directed by the Engineer and as specified herein.

510.2. **"One-Way Traffic Control".** The Contractor shall furnish a pilot vehicle, driver and four flaggers for the purpose of expediting the safe and efficient passage of traffic through the work under one-way controls. The flaggers shall possess the qualifications and meet the requirements set forth in the TMUTCD. The Contractor will be furnished one set of signs by the Department to be attached to the pilot vehicle. The Contractor will also be furnished with two stop signs and a supply of printed cards describing the nature of the work for the use of the flaggers. Two flaggers shall be stationed at each end of the work area. The first flagger shall stop all oncoming traffic. The second flagger will provide the driver of each vehicle with a printed card. The flagger will instruct the driver to follow the pilot vehicle and to not pass the car ahead.

510.3. **Measurement.** "One-Way Traffic Control", performed as provided above, will be measured by the hour the combination of flaggers and pilot vehicle, as described above, works as directed by the Engineer.

510.4. **Payment.** The equipment furnished and operated as prescribed by this item and measured as provided under "Measurement" will be paid for at the unit price bid for "One-Way Traffic Control", which price shall be full compensation for furnishing and operating all equipment; for pilot vehicle driver; for four flaggers; and for all labor, fuel, tools and incidentals necessary to satisfactorily perform the work.

ITEM 512

PORTABLE CONCRETE TRAFFIC BARRIER

512.1. **Description.** This item shall govern for furnishing and placing precast concrete traffic barrier at the locations designated in the plans; and for moving the precast barrier from one location and placing the barrier in a new location as required by the plans. Precast barrier furnished by the Contractor shall be constructed in accordance with the details shown on the plans and to the requirements herein. Barrier sections which are to be furnished by the State will be at a site designated on the plans.

512.2. **Materials.** All materials used in the construction of precast concrete traffic barrier shall conform to the requirements of the Items, "Concrete for Structures", "Reinforcing Steel", "Concrete Admixtures" and "Membrane Curing". Class of concrete shall be as shown on the plans.

512.3. Construction Methods. Prior to the beginning of casting, the Contractor shall give the Engineer ample notice as to the location of the casting site and the date on which the work will begin.

The barrier sections shall conform to the dimensions and cross sections shown on the plans. Steel forms shall be used. Formwork shall be in accordance with the Item, "Concrete Structures". The bottom surface of the barrier shall have a rough texture similar to a wood float finish.

Mixing, placing, and finishing of concrete shall be in accordance with the Item, "Concrete Structures". Concrete shall be form cured or water cured for a minimum of four curing days or may be cured with Type 1-D, Class B, membrane curing compound.

Forms may be removed after the concrete has reached sufficient strength to prevent physical damage to the member. Curing shall not be interrupted for more than 30 minutes. When strength requirements have been met, the barrier sections may be moved to a storage area and placed on blocking to prevent damage.

Barriers shall be installed in accordance with details shown on the plans.

When portable barrier, not designated for permanent use, is no longer required on the project, it shall be stored by the Contractor at a site designated on the plans.

512.4. Defects and Breakage. Concrete traffic barrier, including any required hardware, damaged or lost in the process of fabricating, curing, handling, or placing shall be repaired or replaced as directed by the Engineer. All replacements and repairs shall be made at the Contractor's expense.

512.5. Measurement. Measurement of the barrier will be by the linear foot, based on the nominal lengths of the barrier segments as shown in the plans.

512.6. Payment. The work performed and materials furnished and measured as provided above will be paid for at the unit price bid for "Concrete Traffic Barrier (Portable)", which price shall be full compensation for furnishing and installing the barrier, including the furnishing of all materials and for all manipulation, labor, tools, equipment and incidentals necessary to complete the work.

The work performed in removing the barrier, either from a stockpile or from an existing location on the highway facility, resetting in a new location, and measured as provided above, will be paid for at the unit price bid for "Concrete Traffic Barrier (Move and Reset)", which price shall be full compensation for moving the barrier, repairing the roadway, resetting the barrier in the new location, connecting the barrier sections together, and for all manipulations, labor, tools, equipment and incidentals necessary to complete the work.

The work performed in removing the barrier from an existing location, placing it in a designated area and measured as provided above will be paid for at the unit price bid for "Concrete Traffic Barrier (Remove)", which price shall be full compensation for removing the barrier from roadway or structure, stockpiling it in the designated area, repairing the roadway, and for all manipulations, labor, tools, equipment and incidentals necessary to complete the work.

ITEM 514

CONCRETE TRAFFIC BARRIER

514.1. Description. This item shall govern for the construction of concrete traffic barrier in conformance with the details, locations, lines and grades shown on the plans.

Unless otherwise required on the plans, the barrier may be cast-in-place using conventional forms, may be slipformed or may be constructed of precast concrete segments.

514.2. Materials. The class of concrete shall be as specified on the plans. Concrete shall conform to the requirements of the Item, "Concrete for Structures". Class "A" and Class "C" concrete shall be air-entrained.

Reinforcing steel shall conform to the requirements of the Item, "Reinforcing Steel".

Admixtures shall conform to the Item, "Concrete Admixtures".

Membrane curing shall conform to the Item, "Membrane Curing".

514.3. Construction Methods.

(1) General. Before construction, plans of formwork and method of construction shall be submitted to the Engineer for review and approval.

Any required excavation shall be done in accordance with the Item, "Structural Excavation".

Reinforcing steel shall be placed in accordance with the requirements of the Item, "Reinforcing Steel", and the details shown on the plans. When slipform placement is used, additional bars approved by the Engineer may be welded, by a qualified welder, to the reinforcing steel cage required by the plans.

Forms for conventionally formed barrier and for precast segments shall

be of steel except that wood forms may be used for curves and transitions. Formwork shall be in accordance with the Item, "Concrete Structures".

Drilled shaft foundations, when required, shall be constructed in accordance with the Item, "Drilled Shaft Foundations", and the details shown on the plans.

Mixing, placing, and finishing of concrete shall be in accordance with the Item, "Concrete Structures". Concrete shall be form cured or water cured for a minimum of four curing days or may be cured with Type 1-D, Class B, membrane curing compound.

All exposed surfaces of the barrier shall receive a Class A, Class B, or Class C (two-rub system) finish as specified in the Item, "Surface Finishes for Concrete".

Barriers shall be installed in accordance with details shown on the plans.

Concrete, mortar, curing compound, oil or substances which have spilled or leaked onto the roadway shall be removed by the Contractor to the satisfaction of the Engineer.

(2) **Cast-in-Place Barrier.**

(a) **Conventionally Formed Barrier.** Forms shall be accurately set to the required line and grade, secured by a method not detrimental to the roadway pavement and maintained in a true position during concrete placement. Forms may be removed after the concrete has reached sufficient strength to prevent physical damage to the barrier.

(b) **Slipformed Barrier.** Concrete traffic barriers may be constructed by the use of slipform equipment provided that the finished barrier is true to the specified line and grade within a tolerance of ± 1/4-inch in 10 feet.

The barrier shall present a smooth, uniform appearance in its final position, and shall conform to the horizontal and vertical lines shown on the plans or directed by the Engineer. Any unsatisfactory section of the barrier shall be removed and replaced at the Contractor's expense.

The concrete shall be vibrated and worked until adequately consolidated and free of honeycomb. The concrete shall be of such consistency after slipforming that it will maintain the shape of the barrier without support. Prior to the beginning of operations, the Contractor shall insure that a continuous supply of concrete is available to the slipform machine to minimize starting and stopping. Concrete that is furnished the slipform machine shall not exceed 1-1/2-inch slump, unless directed otherwise by the Engineer.

The slipform machine shall be guided by vertical and horizontal sensors that ride along a wire line. A grade line gauge or pointer shall be attached to the machine in such a manner that a continual comparison can be made between the barrier being placed and the established grade line. The slipform

machine shall not exceed the speed recommended by the manufacturer. In lieu of sensor controls, the slipform machine may be operated on rails or supports set at the required grade.

(3) **Precast Segments.** Prior to the beginning of casting, the Contractor shall give the Engineer ample notice as to the location of the casting site and the date on which the work will begin. Forms may be removed after the concrete has reached sufficient strength to prevent physical damage to the member. Curing shall not be interrupted for more than 30 minutes. When strength requirements have been met, the barrier sections may be moved to a storage area and placed on blocking to prevent damage.

514.4. **Defects and Breakage.** Concrete traffic barrier damaged in the process of fabricating, curing, handling, or placing shall be repaired or replaced as directed by the Engineer. All replacements and repairs shall be made at the Contractor's expense.

514.5. **Measurement.** "Concrete Traffic Barrier" of the various types including the terminal sections will be measured by the linear foot, complete in place. The barrier type providing for two longitudinal half sections will be measured along the center line between the two halves.

514.6. **Payment.** The work performed and materials furnished as prescribed by this Item, measured as provided under "Measurement", will be paid for at the unit price bid for "Concrete Traffic Barrier" of the type specified, which price shall be full compensation for furnishing and placing all materials, including drilled-shaft foundations, and for all excavation, manipulation, labor, tools, equipment and incidentals necessary to complete the placement of the concrete barrier rail.

When the contract does not include a bid item for asphaltic concrete pavement, the means of lateral support for the concrete traffic barrier will not be paid for directly but shall be subsidiary to this item.

ITEM 516

VEHICULAR IMPACT ATTENUATOR ASSEMBLY
(Steel Barrel)

516.1. **Description.** This item shall govern for the furnishing and installation of an assembly of collapsible steel barrels. The barrel assembly will in general be located in the gores of diverging roadways in front of fixed objects. The steel barrel vehicular impact attenuator assembly shall be constructed in accordance with the plans and these specifications at the locations shown in the plans.

516.2. **Materials.** All materials shall be new. The barrels called for in the plans shall be commercially available 55-gallon tight head drums of

20-gauge steel for the top, bottom and sides. The drums shall weigh approximately 35 pounds each prior to the removal of a 7-inch diameter hole which shall be punched or cut in the center of the top and bottom of each drum. Filling and dispensing fittings that are normally furnished in drum tops will not be required. The outside of the drums shall be white in color unless otherwise specified on plans. Oval spacers and barrel spacers shall be painted with an approved white paint.

Where required, concrete for foundations, back up walls and anchors shall be Class A Concrete in accordance with the Item, "Concrete for Structures". Steel reinforcement, anchor fittings and cables shall meet the requirements of the Item, "Reinforcing Steel" or "Metal for Structures", whichever is applicable.

Upon application to the Engineer, and with his approval, steel drums of heavier gauge material will be permitted provided that alternate cut-out patterns in the top and bottom of the heavier gauge drums are used. The Engineer will furnish the alternate cut-out patterns upon application. The cut-out patterns will vary depending upon the weight of drums furnished.

The Contractor shall furnish for approval manufacturer's certificates or literature for all items of the barrel assembly that are stock items prior to fabrication and installation of the barrel assembly.

All fabricated steel parts other than barrels and spacers used in the vehicular impact attenuator assembly shall be galvanized. Commercial galvanizing will be acceptable.

516.3. Construction. The steel barrel assembly shall be fabricated and installed in accordance with the details shown in the plans.

516.4. Measurement. Completed and accepted work as described by this item and in accordance with details in plans shall be measured as each vehicular impact attenuator assembly installation complete in place.

516.5. Payment. The work performed and material furnished as prescribed by this item, measured as provided under "Measurement" shall be paid for at the unit price bid for "Vehicular Impact Attenuator Assembly" which price shall be full compensation for all labor, equipment, tools, incidentals, and services, and for furnishing all materials necessary to complete the work, including barrels, spacers where required, banding material, cable, fittings and attachment of same as shown on plans, and foundations, back up walls, anchors, anchor fittings and reinforcing steel where required.

ITEM 518

VEHICULAR IMPACT ATTENUATOR ASSEMBLY
(Sand-Filled Plastic Barrels)

518.1. **Description.** This item shall govern for the furnishing and installation of an assembly of individual, impact-absorbent, frangible-plastic sand-filled barrels. The sand-filled plastic barrels shall be free standing and placed in a prescribed array of specified weights in individual barrels in accordance with the plans and these specifications at the locations shown in the plans. The selection of Type A or Type B vehicular impact attenuator assembly will be at the Contractor's option.

518.2. **Operating Characteristics.** The operating characteristics of the barrel, or barrels, shall be such as to absorb the kinetic energy from a moving vehicle by a dispersible sand content and shattering or fracturing of the plastic barrels.

The barrels shall be furnished in the color of Federal Yellow unless otherwise specified on the plans.

The Contractor shall furnish for approval manufacturer's certificates or literature for all items of the assembly that are stock items prior to fabrication and installation of the vehicular impact attenuator assembly.

518.3. **Materials.** All material shall be new. The plastic barrels shall be commercially available.

(1) **Type A Vehicular Impact Attenuator Assembly.**

(a) **Barrels.** The barrels shall be approximately 36 inches in height and diameter. The barrels shall consist of an outer cylinder approximately 5/16-inch thick enclosing two compartments. The upper compartment shall contain sand and the lower compartment shall contain a core made of plastic. Each barrel shall have a weatherproof, press-fit 0.125 gauge lid riveted in place to prevent theft. A plastic disc bottom capable of supporting the assembly shall be required on soft ground only. The sand compartment shall be separated from the core compartment with a 40-inch circular flexible seal, slotted to retain the sand and to pass any free water contained in the sand compartment. The two compartments shall also be separated by an intermediate 35-inch diameter stiff plastic disc capable of spreading the sand load over the core in the lower compartment. Where no core is required, a seal shall be used at ground level with turned up edges overlapping at slits as in the other barrels with cores.

Each of the various elements forming the assembled barrel shall be made of high density polyethylene material or a type of plastic that is suitable for the function of each particular element. The barrel elements shall be manufactured so as to permit easy assembly in the field.

The cores shall be supplied in depths of 11½ inches, 16½ inches, or 20½ inches. The depth of core to be used will depend on the amount of sand-fill called for according to the following table. The cores shall be capable of supporting their respective sand loads.

Barrel Height, in.	Core Depth, in.	Sand-Fill Weight, lb.
36	20½	200
36	20½	400
36	16½	700
36	11½	1400

(b) Sand-Fill Material. The sand-fill material shall be clean, dry concrete sand or of a type acceptable to the Engineer. The weight of sand required to fill each barrel shall be as shown in the plans or as directed by the Engineer.

(2) Type B Vehicular Impact Attenuator Assembly.

(a) Barrels. Each barrel shall be molded from plastic and shall contain sand in a stable position. Barrels may be molded in one piece or may be molded in two separate components called a stabilizer or inner container. When used, the inner container shall shatter upon impact, shall be wine glass shaped, molded in one piece, and approximately three feet in height. The height of the stems shall be varied to produce inner containers which contain and support without leakage 200 lb., 400 lb., 700 lb., and 1400 lb. sand masses as shown in the plans. Inner containers shall be placed inside of outer containers, or stabilizers, in an array. The stabilizer shall shatter upon impact and shall be molded in one piece with approximately three feet height and approximately three feet diameter at the top.

When barrels are molded in one piece, the single piece module shall be frangible upon impact but otherwise support and contain 200 lb., 400 lb., 700 lb., and 1400 lb. sand masses at the proper height without leakage.

(b) Lid. Each barrel shall have a weatherproof lid which shall be clamped securely or riveted in place to prevent theft.

Each of the various elements forming the assembled barrel shall be made of high density polyethylene material or a type of plastic suitable for the function of each particular element.

The thickness of all parts shall be 1/4 in., ± 1/16 in.

(c) Sand-fill Material. The sand-fill material shall be clean, dry concrete sand or of a type acceptable to the Engineer. The weight of sand required to fill each barrel shall be as shown in the plans or as directed by the Engineer.

518.4. **Construction.** The sand-filled plastic barrel assembly shall be fabricated and installed in accordance with these specifications and with the details shown in the plans.

Where practical, for convenience in future replacements, the Contractor will be required to outline (in contrasting color paint) the location of the barrels and mark the weight of sand in each barrel as indicated on the specific site plan.

518.5. **Measurement.** Completed and accepted work as described by this item and in accordance with details in the plans shall be measured as each vehicular impact attenuator assembly installation, complete in place.

518.6. **Payment.** The work performed and material furnished as prescribed by this item, measured as provided under "Measurement", shall be paid for at the unit price bid for "Vehicular Impact Attenuator Assembly" which price shall be full compensation for all labor, equipment, tools, incidentals and services, and for furnishing all materials necessary to complete the work described by this item.

Where required, special foundations, support pads, back-up walls, etc., will be measured and paid for in accordance with pertinent bid items.

ITEM 520

WEIGHING AND MEASURING EQUIPMENT

520.1. **Description.** This item shall govern for the weighing and measuring equipment utilized where materials are specified to be measured or proportioned by weight or volume.

520.2. **General Requirements.** Except as modified herein, all scales and scale installations shall meet the requirements of the latest revision of the National Bureau of Standards Handbooks 44 and 112 (published by the U.S. Department of Commerce and available from the Superintendent of Documents, U.S. Government Printing Office, Washington, D.C. 20402), except that the required accuracy shall be 0.4 percent of the load being weighed or 1 graduation on the dial of the scale. The Contractor shall provide personnel, facilities and equipment for checking the scales to the satisfaction of the Engineer.

All scales shall be checked prior to beginning of operations, after each move and at such other times, when in the opinion of the Engineer there is a question as to their accuracy or adequacy, and at least once each 6 months. Plant operations shall cease during the checking operation. When inaccuracy or inadequacy is discovered, scale use will not be resumed until corrective measures have been completed and/or the scales calibrated as pro-

vided by this item. Whenever equipment is adjusted, the adjustments shall be so made as to bring performance errors as close as practicable to zero value.

For use of State inspection forces in checking the scales during operation, the Contractor shall furnish four 50-pound weights. In addition, the Contractor shall furnish four 5-pound weights and four 2-pound weights to be used in checking cement, asphalt and small platform scales. All weights shall be checked and certified by the Texas Department of Agriculture, Weights and Measures Section as meeting the Maintenance Tolerances for Avoirdupois Weights specified in Handbook 44. All scales shall be satisfactorily insulated against shock, vibrations or movement of other operating equipment in the plant.

In lieu of the above specified weights for checking the scales, the Contractor may furnish a report of calibration from a commercial scale company, approved by the Engineer, certifying that the scales meet the requirements of this item. This report of calibration will be required at least once each 6 months.

The weighing containers shall be sufficiently tight to prevent leakage of the contents and shall be of sufficient capacity to hold a complete batch without wasting or leveling by hand and shall be so designed that the entire batch will discharge quickly into the mixer. The weighing containers shall be so constructed that if in charging, an excess is introduced into the weighing containers, it may be removed by the operator. The weighing containers shall be provided with a close fitting and quick operating cut-off gate, so that there will be no leakage of the contents into the mixer, and shall be satisfactorily attached to the batching scales.

520.3. Equipment. Any electronic device which has been adapted for weighing that meets the calibration requirements of Article 520.2, will be acceptable. This type of scale may be substituted for any of the equipment described in this section.

(1) Truck Scales. Truck scales shall consist of a set of standard platform truck scales capable of weighing the load as a single draft; that is, the total weight of the truck or truck-trailer combination shall not be determined by adding together the weights obtained by separately weighing each end of such truck or by weighing individual elements of such truck or coupled combination. The Contractor shall provide a weather-tight building of sufficient size to house the Contractor's weigher and the State's checker.

(2) Aggregate Batching Scales. The scales used for weighing aggregate shall be equipped with a quick adjustment at zero to provide for any change in tare. The scales shall be provided with pointers or "tell-tale" indicators of the springless dial type to indicate full load for each aggregate. The dial or "tell-tale" device shall be in full view of the operator while charging the weigh box and he shall have convenient access to all controls.

(3) **Portable Platform Scales.** Portable platform scales shall conform to the general requirements of this specification, except that they will not be required to be checked after each move or set-up within a given project, unless directed by the Engineer.

Type A. This type shall consist of a portable platform scale having a container fastened securely to the platform.

The capacity of this type of scale shall be not less than 500 pounds. The weighing capacity may be obtained by means of a weigh beam and loose weights.

When this type of scale is used, the Contractor shall provide a container of approximately the same size as the platform for weighing the aggregate, or he may provide an elevated hopper, the base of which is approximately the size of the platform from which the aggregates may be discharged.

If the hopper is provided, it shall be of such design that the aggregates will be completely and quickly discharged and shall be of such construction that the position of the aggregates while being weighed will not affect the accuracy of the weights.

The Contractor will not be permitted to increase the size of the original platform by constructing another platform on top of the original unless provision is made to set the tare weight of the container or hopper separately from the batch weight. Separate scales for fine and coarse aggregate will be required.

Type B. This type shall consist of a portable platform scale having a platform sufficiently large to permit the weighing of loaded wheelbarrows or carts.

The capacity of this type of scale shall be not less than 800 pounds. The weighing capacity may be obtained by means of a weigh beam and loose weights. The scale shall preferably be equipped with a double weigh beam, in order that the tare weight of the wheelbarrow or other vehicle for transporting the aggregates may be set off on the weigh beam separately from the batch weights. When the scale is equipped with a single beam or a single beam and a tare beam, separate scales shall be provided for fine and coarse aggregates.

When this type of equipment is designed to weigh more than one kind of material on the same scale, it shall be equipped with separate charging beams and a tare beam. Each charging beam shall be equipped with a release lever to throw the beam in and out of service. This type of scale may also be equipped with a "tell-tale" dial meeting the requirements of these specifications.

(4) **Suspended Hopper**. This type shall consist of a weighing container or hopper completely suspended from the scale equipment. Suitable provisions shall be made for leveling the scale equipment.

The appliances used for placing materials within or upon the weighing equipment shall so regulate and control the quantity supply that accurate adjustment to the weights required can be secured with little expenditure of time and labor. A convenient means shall be provided for the addition or the removal of small amounts of material to adjust the quantity to the exact weight per batch.

(5) **Cement Weighing Equipment**. Where bulk cement is used it shall be batched by weight. The scales shall be of rugged construction. Provision shall be made for indicating to the operator that the required load in the weigh box or container is being approached, which device shall indicate at least the last 50 pounds of load. Where a closed type cement weigh box is used, the cement weighing scales shall be provided with a springless dial to indicate when the weigh box is empty. This indicator for the empty condition of the weigh box shall be in continuous operation. The weigh box shall be fitted with an approved vent, a tightly covered inspection opening of not less than 12 inches by 12 inches. The box and scales shall be maintained in a condition to meet the requirements for accuracy of weight.

Where Portland cement to be mixed with subgrade, subbase or base material is not batched by weight and bulk cement is furnished, each truck shall have the weight of cement certified by a bonded public weigher or the Contractor shall place a set of standard platform truck scales or hopper scales at a location approved by the Engineer.

(6) **Belt Scales.** Belt scales used for proportioning aggregate into asphaltic mixtures shall be accurate to within 1.0 percent, average of 3 test runs, where no individual test run shall exceed 2.0 percent when checked as outlined in Test Method Tex-920-K. Material tests shall be performed at least once each six months. Simulated belt loading tests may be used as expeditious checks of scale accuracy between material tests. The manufacturer's operation and maintenance manual shall be made available to the Engineer.

(7) **Automatic Proportioning Devices.**

(a) **Portland Cement Concrete.** When required by the plans or special provisions, batching plants shall be equipped to proportion by weight, aggregates and bulk cement, by means of automatic proportioning devices of an approved type.

The scales shall be automatic to the extent that the only manual operation required for proportioning the aggregates for one batch shall be a single operation of a switch or a starter.

The bulk cement batcher and aggregate batcher shall be so interlocked that a new batch cannot be started until all weigh hoppers are empty, the scale at zero and the discharge gates closed. The interlock shall permit no part of the batch to be discharged until all aggregate hoppers and the cement hopper have been filled with the correct charge. The discharge gate on the cement hopper shall be so designed as to permit regulating the flow of the cement into the aggregate as directed by the Engineer.

Material discharged from the bins shall be controlled by gates or by mechanical conveyors. The means of withdrawal from the bins and the discharge from the weigh box shall be so interlocked that not more than one bin can discharge at a time; that the order of discharge can be changed as directed by the Engineer; and that the weigh box cannot be tripped until the required quantity from each of the bins has been deposited therein. Should a separate weigh box be used for each size aggregate, all may be operated and discharged simultaneously.

When the discharge from the bin is controlled by gates, each gate shall be actuated automatically so that the required weight is discharged into the weigh box after which the gate shall automatically close and lock.

The automatic weighing device shall be so designed that the number of proportions required may be set at the same time and that proportions and the sequence of weighing individual sizes may be changed without delay. The locking mechanisms or devices shall be so arranged that they may be locked at the direction of the Engineer.

When shown on the plans, automatic scales shall be equipped with a recorder capable of printing the weight of each proportion and the total batch weight.

Automatic proportioning devices shall comply with the general requirements for scales. In order to check the accuracy of batch weights, the gross weight and tare weight of batch trucks, truck mixers and truck agitators shall be determined when directed by the Engineer. The equipment shall be weighed on truck scales conforming to the requirements of Subarticle 520.3.(1). of this specification.

(b) Asphaltic Mixtures.

1. Weigh-batch Plant. When specifically indicated on the plans, asphaltic mixture mixing plants used in the production of asphaltic base and surface mixtures shall be equipped with approved fully automatic devices for the batching and cycling operations. There shall be interlock cut-off circuits to interrupt and stop all operations at any time there is a malfunctioning of any part of the control system.

The automatic proportioning controls shall include the necessary equipment for accurately proportioning batches of the various components of the

mixture into each batch. The mixture shall be proportioned by weight except that an asphalt meter, measuring by volume, may be used in lieu of an asphalt scale. Visible dial scales shall be provided to show the weights of each batch ingredient. If an asphalt meter is used, a suitable digital readout shall be provided to show the amount of asphalt used.

Over and under asphalt and aggregate weight check sensors shall be included in the proportioning system to check the accuracy of the asphalt and aggregate bin weights. The over-under tolerance limits for aggregate shall be selected by the Engineer after the amounts of the various ingredients have been determined for a batch of mixture. The equipment shall be capable of a tolerance range of ±0.5% to ±2% as applied to the material being weighed. The tolerance limits for asphalt shall be ±1% of the total asphalt being weighed. The tolerance limits for the no-load condition shall be ±1 scale graduation for the aggregate scales and ±3 graduations for the asphalt scales. The tolerances shall be locked in such manner that the settings for the over and under sensors cannot be altered or bypassed without the written approval of the Engineer. The system shall incorporate provisions for a manual check which the operator would perform periodically as requested by the Engineer.

At least one set of scale dials shall be provided, one dial for aggregate and one dial for asphalt. The scale dials shall be divided into increments not to exceed 1/1000 of the total dial capacity. The scale dials may be located either in the dust proof control room or on the plant near the weighing hopper. In either location, the scale dials shall accurately indicate the weight in the weighing hopper from zero load to the maximum batch weights.

If the scale dials are located on the plant outside the control room, there shall be provided either an identical set of scale dials inside the control room or digital weight indicators which for either type shall duplicate within a tolerance of ± one graduation for aggregate scales and ± one graduation for asphalt scales any reading of the scale dial indicators located outside on the plant. Wherever located, the scale dials shall be so positioned that the dial and indicators are in full view of the operator in the electronic control room. The normal weight of a batch of aggregate shall be not less than one-half the aggregate scale dial capacity.

The automatic proportioning system shall be provided with low bin indicators arranged in such manner that under normal working operations the batching operation will be automatically stopped when the level of material in any supply bin is not sufficient to complete the weighing of a complete batch of the asphaltic mixture.

The system shall include a batch counter which can be preset for determining the number of batches which may be desired in one uninterrupted production sequence, and a counter to show the number of batches for the day's run.

The mixer shall have an accurate time-locking device to control the operation of a complete mixing cycle by locking the weigh box gate(s) after charging the mixer. It shall remain locked until the mixing cycle is complete, the mixture has been dumped, and the mixer discharge gate is closed. The timing device shall automatically control the dry and wet mixing period in accordance with the governing specification.

The control of the timing shall be adjustable and capable of being preset at the time intervals directed by the Engineer. Changes in mixing time shall be made only when approved in writing by the Engineer.

The aggregate dryer and asphalt tank heaters shall be equipped with burners that are automatically controlled by thermostats. This automatic equipment shall control the heat of the materials within the specified tolerances. Manual controls shall be used only as directed by the Engineer.

Temperature recording devices shall be supplied to record the temperatures of the aggregate prior to the mixing operation and the asphalt near the discharge valve into the mixer unit.

The automatic heat control panel and the temperature recording devices shall be located inside the dust-proof control room.

Automatic controls shall be housed in a dust-proof room located in such manner that the mixer discharge chute is in full view of the operator.

If at any time the automatic control devices become inoperative, the plant operations will be allowed to continue under manual controls for not more than two days of operation, at which time all plant operations shall cease until the necessary repairs are made. Continuous and frequent breakdowns of the automatic control devices shall be cause for suspending operations until the devices are properly repaired.

When specifically provided for in the plans, the proportioning system shall be equipped with an automatic digital record printer and will record batch weights and print out the required information on a continuous tape or ticket through the use of a printing calculator. When requested by the Engineer, the Contractor shall demonstrate the accuracy of the printout device, within a tolerance of ± one graduation for asphalt scales. The printout accuracy shall also apply to the no-load condition.

In the event of a breakdown of the recording equipment, the pay weights shall be determined by weighing the mix in the trucks on approved platform and recording scales or by calculated batch weights for a maximum period of not more than two working days. Continuous and frequent breakdowns of the recording equipment shall be cause for suspending operations until the recorder is properly repaired.

Each individual ticket or continuous tape shall contain the following readable information printed automatically by the digital record printer:

Date

Project Identification Code Number. (This number will be supplied by the Department and will have a maximum of 4 digits.)

Time of day to the nearest minute at intervals not greater than for each truck load, or at intervals not greater than 10 batches when material is being deposited into a storage bin.

Mix Design Number.

Zero scale record for aggregate and asphalt to be printed at intervals not greater than before each truck loading or at intervals not greater than 10 batches when material is being deposited in a storage bin.

Weight of each aggregate for each batch recorded accumulatively or separately.

Total weight of all aggregate in each batch.

Weight of asphalt in batch.

Total of batch weights (combined mixture of asphalt and aggregate) for the day and/or any part of a day as required by the Engineer. This printing will be required on the tape or ticket at the times specified herein during each day of operation.

Total of either the aggregate or the asphalt for the day and/or any part of a day as requested by the Engineer. This printing will be required on the tape or ticket at the times specified herein during each day of operation.

One copy of the tape shall be provided the Engineer at the end of each day's run. If tickets are used, the Engineer shall be furnished three tickets with each truck load.

The recording unit shall be in the same room as the automatic batching console unit. The recording unit may be separate from the console.

2. **Continuous Mixing Plant.** Continuous mixing plants shall provide satisfactory means to afford positive interlocking or mechanical control between the flow of aggregate through the gates and flow of asphaltic material through the asphalt meter. Means shall be provided to check the rate of flow of the asphaltic material by scale weight per revolution.

When shown on the plans, devices capable of automatically sampling and weighing the quantity of each hot bin aggregate size and sampling, weighing, or metering the asphaltic material fed to the pugmill during either a known number of revolutions of the plant or a known interval of time shall be installed as part of the plant equipment. In addition, each aggregate hot bin, mineral filler bin, and the asphaltic material feed line shall

have interlock circuits such that the plant operations will be stopped if either aggregate or asphaltic material flow is discontinued or reduced.

The plant shall proportion size of aggregate to the pugmill with such accuracy that the weight of material from each hot bin shall not deviate from the design value by an amount more than 1.5% of the total weight of asphaltic concrete delivered per revolution or interval of time. Where the separate addition of mineral filler is required, it shall be added so as not to deviate more than 0.5% on the basis stated above for aggregates. The asphaltic material shall be added so as not to deviate more than 0.1% on the basis stated above for aggregates. In no case shall the total weight of asphaltic concrete vary from the design weight by more than ± 2% of the design weight.

3. **Drum Mix Plant.** Drum mix plants shall provide satisfactory means to assure positive interlock between dry weight of aggregate flow and the flow of asphaltic material to the drum mixer.

The total aggregate feed shall be weighed continuously by a belt scale meeting the requirements of this specification. Provisions shall be made for introducing the moisture content of the total aggregate feed into the belt scale weighing signal and correcting wet aggregate weight to dry aggregate weight. The proportioning system shall be capable of adjusting the flow of asphaltic material to compensate for any variation in the dry weight of aggregate flowing into the drum mixer. Automatic digital readings of both the dry weight of aggregate flow and asphaltic material flow shall be displayed and totaled in appropriate units of weight and time.

The automatic proportioning system shall be provided with bin flow indicators arranged in such manner that under normal working conditions a signal will automatically be given when flow of aggregate from any cold aggregate bin is interrupted.

The drum mixer burner and asphalt tank heaters shall be automatically controlled by thermostats. This automatic equipment shall control the heat of the materials within the specified limits. Plants shall be equipped to record mixture temperature as it leaves the drum mixer.

(8) **Asphaltic Material Bucket.** The asphaltic material bucket shall be of sufficient size to hold the necessary asphaltic material for one batch. If the material is measured by weight, the bucket shall be properly attached to the scales. If the proportioning is by volume based on weight, the measuring bucket used shall be of the over-flow type and shall meet the requirements of the Engineer. The valves at the asphaltic material bucket shall be of a quick cut-off type that do not leak.

(9) **Asphalt Meter.**

(a) **Weigh-batch Plant.** Pressure type flow meters for volumetric mea-

surement of asphalt shall automatically measure the asphaltic material within an accuracy of 1.0 percent when tested in accordance with Test Method Tex-921-K. The meter shall be so constructed that any setting may be locked and the meter will automatically reset itself to this setting after the discharge of the asphaltic material to the batch. A thermometer shall be installed in the asphalt line to accurately measure the temperature within plus or minus 5 F over a range from 50 F to 400 F. Provisions of a permanent nature shall be made for checking the accuracy of meter output, including scales and container of such size that a full batch of asphaltic material may be weighed.

(b) **Continuous and Drum Mix Plants.** Asphalt flow meters shall provide an automatic digital display of the volume or weight of asphaltic material which has passed through the line leading to the spray bar. The meter shall register within an accuracy of 1.0 percent when checked in accordance with Test Method Tex-921-K. Accuracy of asphalt flow meters shall be checked at least once each six months.

(10) **Water.** The measuring device for measuring water by volume shall indicate the quantity in gallons and fractions thereof for asphaltic mixtures. The quantity shall be measured in gallons for Portland cement concrete. When a volumetric tank or bucket is used for measuring the water, the supply inlet shall cut off automatically and remain off until the container has emptied completely and the discharge line to the mixer is closed. When water is measured by weight, the weigh bucket shall be properly attached to scales meeting the general requirements of this specification. When a pressure type flow meter for volumetric measurement of the water is used, it shall be so constructed that any setting may be locked and the meter shall be capable of being manually or automatically reset to the locked setting after the addition of water to each batch.

Regardless of the method of water measurement used, the operating mechanism shall regulate the quantity of water required for any given batch to within plus or minus 0.2 percent of the total batch for bituminous mixtures and to within plus or minus 1 gallon of the specified quantity of water required for Portland cement concrete mixes. Provisions of a permanent nature shall be made for checking the accuracy herein specified.

520.4. Measurement and Payment. The furnishing, erection, checking, calibration and operation of items listed under this specification will not be measured and paid for directly but shall be considered subsidiary to other bid items.

ITEM 522

READY-MIX PLANTS

522.1. **Description.** This item shall govern for the plant facilities, equipment and operation of Ready-Mix Plants.

522.2. **Materials.** All materials for concrete placed in structures shall conform to the requirements of the Item, "Concrete for Structures".

All materials for concrete placed in pavements shall conform to the requirements of the Items of "Concrete Pavement".

522.3. **General.** It shall be the Contractor's responsibility to furnish concrete meeting all requirements of the specifications. Concrete not meeting the slump, workability and consistency requirements of the specifications shall not be placed in the structure or pavement.

Ready-Mixed Concrete shall be mixed and delivered by means of one of the following approved methods:

(1) Mixed completely in a stationary mixer and transported to the point of delivery in a truck agitator or a truck mixer operating at agitation speed (Central-Mix Concrete).

(2) Mixed completely in a truck mixer and transported to the point of delivery at mixing and/or agitating speed (Transit-Mix Concrete), subject to the following provisions:

(a) Truck mixers will be permitted to transport concrete to the job site at mixing speed if equipped with double actuated counters which will separate revolutions at mixing speed from total revolutions.

(b) Truck mixers equipped with a single actuated counter counting total revolutions of the drum shall mix the concrete at the plant not less than 50 nor more than 70 revolutions at mixing speed, transport it to the job site at agitating speed and complete the required mixing before the concrete is placed.

(3) Mixed completely in a stationary mixer and transported to the job site in approved nonagitating trucks with special bodies. This method of transporting will be permitted for concrete pavement only.

522.4. **Class of Plants.** The class of plant shall be in accordance with one of those specified herein. Unless the class and type of plant is specifically indicated on the plans, either class of central or transit mix plant may be furnished. A central mix plant may always be used when a transit mix plant is specified.

(1) A Class 1 plant shall be for the exclusive use of the Department for a single project and when required, will be designated on the plans as one of the following:

(a) Class 1A—Central-Mix Plant

(b) Class 1B—Transit-Mix Plant

(2) A Class 2 plant shall be for the exclusive use of the Department for more than one project as specified by the Engineer and when required, will be designated on the plans as one of the following:

(a) Class 2A—Central-Mix Plant

(b) Class 2B—Transit-Mix Plant

(3) A Class 3 plant shall be a commercial plant designated for the exclusive use of the Department during continuous placements only, as specified by the Engineer, but available for commercial work during other periods and when required, will be designated on the plans as one of the following:

(a) Class 3A—Central-Mix Plant

(b) Class 3B—Transit-Mix Plant

(4) A Class 4 plant shall be a commercial plant, either central-mix or transit-mix.

Classes 1 and 2 plants shall be located on or near the project as approved by the Engineer. All classes of plants shall be located to meet time requirements for hauling and placing concrete.

522.5. **Certification of Plant.** Before mixing and hauling concrete to Departmental projects, the plant will be thoroughly inspected and must be approved by the Engineer. All scales, water measuring devices, mixers, agitators, hoppers and storage bins shall be in satisfactory operating condition and together with the method of operation, storage facilities, materials and any other necessary item required in the manufacture and delivery of concrete will be inspected for approval by the Engineer.

Weighing and measuring equipment shall be in good working condition, properly calibrated and shall meet all requirements of the Item, "Weighing and Measuring Equipment".

Admixture dispensing equipment shall be as specified in the Item, "Concrete Admixtures".

A metal plate(s) shall be attached in a prominent place on each truck mixer plainly showing the various uses for which it was designed. The data shall include the drum's speed of rotation for mixing and agitating and the capacity of the unit for complete mixing and/or agitating only. A copy of

the manufacturer's design, showing dimensions and arrangement of blades, shall be available at the plant at all times. Accumulations of hardened concrete and worn or damaged blades shall be corrected in accordance with Subarticle 522.6.(2)(a).

If, at any time, the equipment and/or facilities fail to meet specified requirements, approval of the plant will be withdrawn until the defects are corrected and the plant reapproved.

522.6. Equipment.

(1) Batching Plant. The batching plant shall be provided with adequate bins for batching all aggregates and materials required by the specifications.

Bulk cement shall be weighed on a scale separate from those used for other materials and in a hopper entirely free and independent of that used for weighing the aggregates.

Admixtures shall be measured and dispensed as specified in the Item, "Concrete Admixture".

(2) Mixers and Agitators.

(a) General. Mixers shall be of an approved stationary or truck-type capable of combining the ingredients into a thoroughly mixed and uniform mass.

Facilities shall be provided to permit ready access to the inside of the drum for inspection, cleaning and repair of blades.

Mixers and agitators shall be subject to daily examination for changes in condition due to accumulation of hardened concrete and/or blade wear. Any hardened concrete shall be removed to the satisfaction of the Engineer before the mixer is permitted for use. Worn blades and/or fins of any of the configurations shown in Figure 1, if in one single unit, shall be repaired or replaced with new blades or fins when they are worn as much as 10% from the original height of the manufacturer's design.

In some instances the manufacturer or the ready mix company may have added blade or fin extensions similar to those shown in Figure 1. When these additions are clearly added to the original blade or fins as extensions, by welding or bolting, they do not require repair or replacement as specified herein.

Any original blade or fin with holes therein must be repaired or replaced.

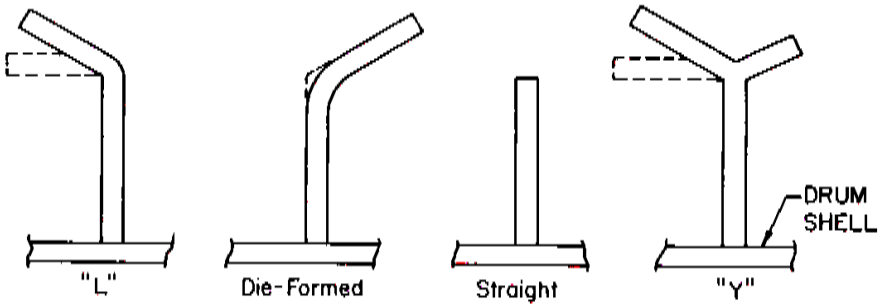

FIGURE 1

(b) Stationary Mixers. These shall conform to the requirements of Article 421.11. Truck mixers mounted on a stationary base will not be considered as a stationary mixer.

(c) Truck Mixers. In addition, truck mixers shall comply with the following requirements:

All truck mixers shall be equipped with actuated counters by which the proper number of revolutions of the drum as specified in Article 522.3. may be readily verified. The counters shall be read and recorded at the start of mixing at mixing speeds.

Each unit shall have adequate water supply and accurate metering or gauging devices for measuring the amount used.

(d) Agitators. Concrete agitators shall be of the truck-type, capable of maintaining a thoroughly mixed and uniform concrete mass and discharging it within the same degree of uniformity specified for mixers. Agitators shall comply with all of the requirements for truck mixers except for the actual mixing requirements.

522.7. Operation of Plant and Equipment.

(a) General. The production and delivery of ready-mixed concrete shall equal or exceed the rate approved by the Engineer for continuous placements. In all cases, the delivery of concrete to the placement site shall assure compliance with the time limits in the applicable specifications for depositing successive batches in any monolithic unit. The Contractor shall satisfy the Engineer that adequate standby trucks are available.

(b) Central Mix Plants. When a stationary mixer is used in a central mix plant for the entire mixing operation, unless otherwise specified by the Engineer, the concrete shall be mixed not less than 50 seconds nor more than 90 seconds, measured from the time the last material enters the mixer to the time discharge of the concrete into hauling equipment begins. The mixer shall be charged so that some of the mixing water will enter the drum

in advance of the cement and aggregate. The entire contents of the drum shall be discharged before any materials of the succeeding batch are introduced.

Additional mortar, consisting of one sack of cement, three parts of sand and sufficient water, shall be added to the initial batch of concrete mixed and after each wash out. Retempering or remixing of concrete will not be permitted. Spilling of materials from the mixer drum during charging or mixing shall be corrected by additional aprons and baffles or by reducing the size of the batch.

(c) **Transit-Mix Trucks.** When transit-mix concrete is used the mixing speed shall be attained as soon as all ingredients are in the mixer. Each complete batch (containing all the required ingredients) shall be mixed not less than 70 nor more than 100 revolutions of the drum at mixing speed.

A portion of the mixing water, required by the batch design to produce the desired slump, may be withheld and added at the job site, but only with permission of the Engineer and under his supervision. When water is added at the job site, 25 revolutions (minimum) at mixing speed, will be required to uniformly disperse the additional water throughout the mix. Water used to flush down the blades after charging shall be accurately measured and included in the quantity of mixing water. The introduction of the initial mixing water, except blade washdown water and that permitted in this Article shall be prior to or simultaneous with the charging of the aggregates and cement.

Mixing and agitating speed shall be as designated by the mixer manufacturer. All revolutions after prescribed mixing shall be at agitating speed. Except for short periods of time during discharge, the drum shall be kept in continuous motion from the time mixing is started until the discharge is completed.

Additional mortar, consisting of one sack cement, three parts sand and sufficient water, shall be added to the batch to coat the drum of the transit mixer or agitator truck. This shall be required for every load of concrete.

The loading of transit mixers shall not exceed 63 percent of the drum volume. When used as an agitator only, the loading of truck mixers shall not exceed 80 percent of the drum volume.

(d) **Storage of Materials.** Adequate storage facilities shall be provided for all Department approved materials. Intermixing with nonapproved materials either in stockpiles or bins will not be permitted. Aggregates from different sources shall be stored in separate stockpiles. Where space is limited, stockpiles shall be separated by physical barriers.

Aggregates shall be stockpiled in a manner which prevents segregation

and maintained as nearly as possible in a uniform condition of moisture. To provide uniformity, each aggregate stockpile shall be reworked with suitable equipment when required by the Engineer.

522.8. **Mixer Performance Test.** Mixers producing concrete, which is acceptably uniform to the satisfaction of the Engineer, need not be tested. All other mixers shall be tested as specified herein.

Mixers failing these tests will not be permitted on further work until corrective measures are taken. Corrective measures may include mixing smaller loads, requiring a more efficient charging sequence, blade repair, drum cleanout or other measures necessary to comply with the performance requirements.

Transit mixers shall be capable of satisfactorily mixing a complete design batch (containing all the required ingredients) within 70 to 100 mixing speed revolutions of the drum. Performance tests shall be made under these conditions without additional water added.

In making a performance test, the variation within a batch will be determined for each concrete property listed in Table 1 as the difference between the highest and the lowest value obtained from different portions of the batch. The comparison will be between two representative samples, taken after discharge of approximately 15 percent and 85 percent respectively of the maximum load recommended by the manufacturer. Both samples shall be obtained within a period of 15 minutes or less.

Concrete Property	Requirement, expressed as maximum permissible difference in results of tests of samples taken from two locations in the concrete batch.
Weight per cubic foot calculated to an air-free basis	1.0 lb.
Air content, percent by volume of concrete	1.0
Slump	
If average slump is 4 in. or less	1.0 in.
If average slump is 4 to 6 in.	1.5 in.
Coarse aggregate content, portion by weight of each sample retained on No. 4 sieve, percent	6.0

TABLE 1—REQUIREMENTS FOR UNIFORMITY OF CONCRETE

522.9. **Measurement and Payment.** No direct compensation will be made for concrete produced under the requirements of this item. Payment will be made under the various items for which prices are provided in the contract.

ITEM 524
HYDRAULIC CEMENT

524.1. **Description.** This item shall govern the requirements of Portland cement and masonry cement. The various materials shall conform to the requirements herein.

524.2. **Cement.**

(1) **Portland Cement.** Type I, Type II and Type III Portland cements shall conform to all the requirements of ASTM Designation C 150 with the following modifications:

(a) The specific surface area of Types I and II shall not exceed 2000 square centimeters per gram as measured by the Wagner Turbidimeter Test Method Tex-310-D. With each shipment, the Contractor shall furnish the Engineer a statement as to the specific surface area of the cement, expressed in square centimeters per gram. When Type II cement is used in concrete piling or prestressed concrete members, the above limit on specific surface area is waived.

(b) The Gillmore time of set test shall govern.

(c) When the cement is to be used in concrete with aggregates that may be deleteriously reactive, the alkali content ($Na_2O + 0.658\ K_2O$) of the cement shall not exceed 0.60 percent.

(2) **Masonry Cement.** Masonry cement shall conform to the requirements of ASTM Designation C 91.

524.3. **General.**

(1) **Shipment and Storage.** All shipments of bagged or bulk cement shall be accompanied by bills of lading and shipping invoices stating the type, brand and source of manufacture. Bags of Portland cement shall contain 94 pounds net. A barrel shall be considered as containing 376 pounds net. Cement which has become partially air set, lumpy or caked will be rejected. All cement shall be stored in weatherproof buildings or bins which will protect it from dampness. Different brands or different types of cement, or the same brand or type from different mills shall not be mixed in storage. Bulk shipments of either truck or rail shall be sealed at the time of loading and shall have seals intact at point of delivery.

(2) **Basis of Acceptance.** Cement may be accepted for use prior to testing provided it is from a prequalified source. A manufacturer shall become qualified by establishing a history of satisfactory quality control as evi-

denced by results of tests performed by the Materials and Tests Laboratory and upon approval of production and storage facilities by the Materials and Tests Engineer. Continued acceptance of cement from a prequalified source will remain in effect as long as all test results on job samples conform to specification requirements. Failure of cement to meet specification requirements shall be just cause to remove a manufacturer from the prequalified status. In this event, all cement from that source will be subject to testing prior to use. This procedure will continue until the Materials and Tests Engineer has determined that adequate quality control has been reestablished. Cement from non-prequalified sources will require sampling and testing prior to use.

524.4. **Measurement and Payment**. No direct payment will be made for the materials furnished under this item, but will be considered subsidiary to the various bid items in the contract.

ITEM 526

MEMBRANE CURING

526.1. **Description**. This item shall govern for the curing of concrete pavement, medians, islands, concrete riprap, cement stabilized riprap, concrete structures and other concrete as indicated on the plans by an impervious liquid membrane forming method.

526.2. **Materials**. The liquid forming membrane curing compound shall consist of a type compound and a vehicle and shall meet the requirements specified in ASTM Designation: C 309, except as modified herein and tested in accordance with Test Method Tex-219-F.

(1) **Type Compound**

Type 1-D: clear, or translucent, with fugitive dye, and

Type 2: white pigmented

(2) **Vehicle. The vehicle shall be either:**
Class A, no restrictions on vehicle solids material, or,

Class B, vehicle solids restricted to all resin material.
Resin will be as defined in ASTM Definitions D 883, Terms Relating to Plastics.

(3) **General Characteristics**

The material shall have a minimum flash point of 80 F when tested by the "Standard Test Method for Flash Point By Pensky-Martens Closed Tester," ASTM Designation: D 93.

It shall be of such consistency that it can be satisfactorily applied as a fine mist through an atomizing nozzle by means of approved pressure spraying equipment at atmospheric temperatures above 40 F.

The material shall be of such a nature that it will not react deleteriously with the concrete nor its components. Type 1-D compound shall be distinctly visible upon the concrete surface not less than 4 hours nor more than 7 days after application.

Type 2 compound shall not settle out excessively or cake in the container and shall be capable of being mixed to a uniform consistency by moderate stirring and shall exhibit a daylight reflectance of not less than 60 percent of that of magnesium oxide when tested as specified.

The compound shall produce a firm, continuous, uniform moisture-impermeable film free from pinholes and shall adhere satisfactorily to the surfaces of damp concrete. It shall, when applied to the damp concrete surface, at the rate of coverage specified herein, dry to touch in not more than 4 hours and shall not be tacky or track off concrete after 12 hours. It shall adhere in a tenacious film and when sprayed, in a single application at the specified rate, on the vertical face of damp concrete, shall not run off or appreciably sag.

The compound shall not disintegrate, check, peel or crack during the required curing period. It shall not peel or pick up under traffic and shall disappear from the surface of the concrete by gradual disintegration.

The permissible percentage moisture loss when tested for water retention shall not exceed:

24 hours after application . . . . . 2 percent
72 hours after application . . . . . 4 percent

The Materials and Tests Engineer may waive any portion of the testing procedures when in his judgement this waiving will not affect the acceptance decision.

526.3 Packaging.

The compound shall be delivered to the job only in the manufacturer's original sealed containers. The manufacturer shall legibly mark these with the brand name of the compound, the type of compound and class of vehicle, and a batch number or symbol with which test samples may be correlated. All approved containers will be stamped with the D-9 monogram, the laboratory number and the date after which retesting is required.

526.4 Construction Methods. The membrane curing compound shall be applied after the surface finishing has been completed, and immediately after the free surface moisture has disappeared. The surface shall be sealed with a single uniform coating of the specified type of curing compound ap-

plied at the rate of coverage recommended by the manufacturer and directed by the Engineer, but not less than 1 gallon per 180 square feet of area. The Contractor shall provide satisfactory means and facilities to properly control and check the rate of application of the compound.

The compound shall be thoroughly agitated during its use and shall be applied by means of approved mechanical power pressure sprayers. The sprayers used to apply the membrane to concrete pavement shall travel at uniform speed and be mechanically driven. The equipment shall be of such design that it will insure uniform and even application of the membrane material. The sprayers shall be equipped with satisfactory atomizing nozzles. Only on small miscellaneous items will the Contractor be permitted to use hand-powered spray equipment. For all spraying equipment, the Contractor shall provide facilities to prevent the loss of the compound between the nozzle and the concrete surface during the spraying operations.

The compounds shall not be applied to a dry surface and if the surface of the concrete has become dry, it shall be thoroughly moistened prior to application of membrane by fogging or mist application. Sprinkling or coarse spraying will not be allowed.

At locations where the coating shows discontinuities, pinholes, or other defects, or if rain falls on the newly-coated surface before the film has dried sufficiently to resist damage, an additional coat of the compound shall be applied immediately at the same rate of coverage specified herein.

To insure proper coverage, the Engineer shall inspect all treated areas after application of the compound for the period of time designated in the governing specification for curing, either for membrane curing or for other methods. Dry areas are identifiable because of the lighter color of dry concrete as compared to damp concrete. All suspected areas shall be tested by placing a few drops of water on the suspected areas. If the water stands in rounded beads or small pools which can be blown along the suface of the concrete without wetting the surface, the water-impervious film is present. If the water wets the surface of the concrete as determined by obvious darkening of the surface, or by visible soaking into the surface, no water-impervious film is present. Should the foregoing test indicate that any area during the curing period is not protected by the required water-impervious film, an additional coat or coats of the compound shall be applied immediately, and the rate of application of the membrane compound shall be increased until all areas are uniformly covered by the required water-impervious film.

When temperatures are such as to warrant protection against freezing, curing by this method shall be supplemented with an approved insulating material capable of protecting the concrete for the specified curing period.

If at any time there is reason to believe that this method of curing is unsatisfactory or is detrimental to the work, the Contractor, when notified, shall immediately cease the use of this method and shall change to curing by one of the other methods specified under this contract.

526.5 **Measurement and Payment.** Work and materials prescribed herein will not be paid for directly but shall be included in the unit price bid for the items of construction in which these materials are used.

ITEM 528

AUTOMATIC SCREED CONTROLS FOR ASPHALTIC-CONCRETE SPREADING AND FINISHING MACHINE

528.1. **Description.** This item shall govern the requirements for automatic screed control systems for asphaltic-concrete spreading and finishing machines. Asphaltic-concrete spreading and finishing machines shall be equipped with an approved automatic dual longitudinal screed control system and a transverse screed control system. The longitudinal controls shall be capable of operating from any longitudinal grade reference including a stringline, ski, mobile stringline, or matching shoe. The Contractor shall furnish all equipment required for grade reference. It shall be maintained in good operating condition by personnel trained in the use of this type of equipment. The equipment shall be capable of constructing a finished surface within specified tolerances.

528.2. **Surface Requirements.** The automatic grade control device shall produce a finished surface meeting the requirements of the surface test on the items of work for which a spreading and finishing machine is required. Skin-patching on wearing surface course will not be permitted unless approved by the Engineer, and sections of pavement exceeding the minimum tolerance shall be corrected at the Contractor's expense.

528.3. **Construction Procedure.** Unless otherwise shown on the plans or directed by the Engineer, the grade reference used by the Contractor may be of any type approved by the Engineer. Control points if required by the plans or Engineer will be established for the finished profile by the Engineer. These points will be set on both sides of the course being laid, when necessary, at intervals not to exceed 50 feet. The Contractor shall set the grade reference for the sensor of the automatic control to follow from the control points established by the Engineer and the grade reference shall have sufficient support so that the maximum deflection shall not exceed 1/16 inch per 25 feet.

528.4. Measurement and Payment. The furnishing, erecting, checking and certifying, maintaining and operating of equipment and work required by this specification will not be measured nor paid for directly, but shall be considered subsidiary to other bid items.

ITEM 530

CONCRETE CURB, GUTTER, CURB AND GUTTER, SIDEWALKS AND DRIVEWAYS

530.1. Description. This item shall govern for curb, gutter, combined curb and gutter, sidewalks and/or driveways, with or without reinforcing steel, composed of Portland cement concrete constructed on approved subgrade, foundation material or finished surface in accordance with the lines and grades established by the Engineer and in conformance with details shown in plans.

As used in this item, the word "curb" refers to concrete curb, concrete gutter and combined concrete curb and gutter.

530.2. Materials. Concrete used in conventionally formed construction shall be Class "A" Concrete meeting the requirement of the Item, "Concrete for Structures", or concrete as specified in the Items of "Concrete Pavement".

Concrete for extruded construction shall be Class "C", meeting the requirements of the Item, "Concrete for Structures", except that the coarse aggregates shall meet the requirements of Grade 8, of the Item, "Concrete for Structures".

Reinforcing steel, if required, shall conform to the requirements of the Item, "Reinforcing Steel", or the Items of "Concrete Pavement". Expansion joint filler shall be premolded material meeting the requirements of the Item, "Concrete Structures", or material meeting the requirements specified in the Items of "Concrete Pavement".

Membrane curing materials shall meet the requirements of the Item, "Membrane Curing". Admixtures shall meet the requirements of the Item, "Concrete Admixtures".

530.3. Construction Methods. For conventionally formed concrete, the subgrade, foundation, or pavement surface shall be shaped to line, grade and cross section and, if considered necessary by the Engineer, hand tamped and sprinkled. If dry, the subgrade or foundation material shall be sprinkled lightly immediately before concrete is deposited thereon.

Outside forms shall be of wood or metal, of a section satisfactory to the Engineer, straight, free of warp and of a depth equal to the depth required. They shall be securely staked to line and grade, and maintained in a true

position during the depositing of concrete. Inside forms for curbs shall be of approved material, shall be of such design as to provide the curb required, and shall be rigidly attached to the outside forms.

The reinforcing steel, if required, shall be placed in position as required by the plans. Care shall be exercised to keep all steel in its proper location.

After the concrete has been struck off and after it has become sufficiently set, the exposed surfaces shall be thoroughly worked with a wooden float. The exposed edges shall be rounded by the use of an edging tool to the radius indicated on plans. Unless otherwise specified on the plans, when the concrete has become sufficiently set, the inside form for curbs shall be carefully removed and the surface shall be plastered with a mortar consisting of one part of Portland cement and two parts fine aggregate. The mortar shall be applied with a template made to conform to the dimensions as shown on plans. All exposed surfaces shall be brushed to a smooth and uniform surface.

Sidewalks shall be constructed in sections of the lengths shown on plans. Unless otherwise provided by the plans, no section shall be of a length less than 8 feet and any section less than 8 feet shall be removed by the Contractor at his own expense. The different sections shall be separated by a premolded or board joint of the thickness shown on the plans, placed vertically and at right angles to the longitudinal axis of the sidewalk. Where the sidewalk or driveways abut a curb or retaining wall, approved expansion material shall be placed along their entire length. Similar expansion material shall be placed around all obstructions protruding through sidewalks or driveways. Sidewalks shall be marked into separate sections, each 4 feet in length, by the use of approved jointing tools.

Curbs, gutters and curb and gutters shall be placed in sections of 50 feet maximum length unless otherwise shown on the plans. Joints shall be constructed at such locations and of the type as directed and specified on the plans.

For extruded concrete construction, the concrete shall be placed by an extrusion machine approved by the Engineer. When placement is directly on subgrade or foundation materials the foundation shall be hand-tamped and sprinkled if considered necessary by the Engineer. If the concrete is placed directly on the surface material or pavement, such surface shall be thoroughly cleaned. If required by plan details, the cleaned surface shall then be coated with an approved adhesive or other coating as specified at the rate of application shown.

The line shall be maintained from a guideline set by the Contractor from survey marks established by the Engineer. The outline shall strictly conform to the details shown on plans. The forming tube of the extrusion machine shall be readily adjustable vertically during the forward motion of

the machine to provide required variable heights necessary to conform to the established grade line. To provide a continual check on the grade, a pointer or gauge shall be attached to the machine in such a manner that a comparison can be made between the extruded work and the guideline. Other methods may be used if approved in writing by the Engineer.

The approved mix shall be fed into the machine in such a manner and at such consistency that the finished work will present a well-compacted mass with a surface free from voids and honeycomb and true to established shape, line and grade.

Any additional surface finishing specified and/or required shall be performed immediately after extrusion. Joints shall be constructed at such locations as directed by the Engineer and to the details shown on plans.

When sidewalks are to be placed adjacent to a curb or a curb and gutter, the sidewalk and curb or curb and gutter may be placed monolithically in one pass of the machine provided the work is satisfactory to the Engineer.

All concrete placed under the item shall contain 7% ± 1½% entrained air. The completed work shall be cured for a period of not less than 72 hours by one of the methods specified in the Item, "Concrete Pavement (Water Cement Ratio)", excluding "Asphalt Curing", or in accordance with the requirements of the Item, "Membrane Curing".

530.4. **Measurement.** Work and accepted material as prescribed by this item for concrete curb, concrete gutter or concrete curb and gutter will be measured by the linear foot, complete in place.

Work and accepted material as prescribed by this item for concrete sidewalk shall be measured by the linear foot or by the square yard of surface area, complete in place, as indicated on the plans.

Work and accepted material as prescribed by this item for concrete driveway shall be measured by the square yard of surface area, complete in place.

530.5. **Payment.** The work performed and materials furnished as prescribed by this item and measured as provided under "Measurement" will be paid for at the unit price bid for "Concrete Curb", "Concrete Gutter" or "Concrete Curb and Gutter" of the type indicated on the plans or for "Concrete Sidewalks" of the width when indicated on the plans, or "Concrete Driveways". The price for each item shall be full compensation for cleaning and coating the base; furnishing and applying all water, mortar, adhesives or other material, including reinforcing steel and dowel bars, if required; for furnishing, loading and unloading, storing, hauling and handling all ingredients, including all freight and royalty involved; for mixing, placing, finishing, sawing, cleaning and sealing joints and curing all concrete; for furnishing all materials for sealing joints and placing joints

and joint-filler material in proper position; and for all manipulations, labor, equipment, appliances, tools, traffic provisions and incidentals necessary to complete the work.

ITEM 532
CONCRETE RETARDS

532.1. **Description.** This item shall govern for Portland cement concrete retards, constructed at such places as shown on plans or as designated by the Engineer, in accordance with these specifications and in conformity with lines, grades, depth and other details shown on the pertinent typical sections.

532.2. **Materials.** All concrete materials used in construction under this item shall conform to the requirements of the Item, "Concrete for Structures", except that when indicated on the plans, processed material from the base source, meeting the grading requirements established by the base course specification, may be used. All material shall be approved by the Engineer before being incorporated into the work.

532.3. **Construction Methods.** Prior to placing the concrete, the excavation for retards shall be made to proper section, and if considered necessary by the Engineer, the bottom of excavation shall be hand tamped and sprinkled. The excavated area for retards shall be moist when the concrete is placed.

Unless otherwise shown on plans, materials and proportions for concrete used in construction under this item shall conform to the requirements as specified for Class "B" concrete under the Item, "Concrete for Structures".

When the plans indicate that the use of base course material as aggregate will be permitted, the proportions of cement and aggregate will be as shown on the plans.

After the concrete has been placed, compacted and shaped to conform to the dimensions of typical sections shown on the plans, and after it has become sufficiently set, it shall be given a moderately rough finish by floating with a wood float.

No mortar or concrete work shall be done when the temperature is below 35 F and all work shall be protected from freezing. After completion of the retard, all exposed surfaces shall be covered with burlap, cotton mats or other approved covering and kept wet for a period of 3 days. Type 2, Class "A" curing compound conforming to the requirements of the Item, "Membrane Curing", will be permitted when applied to all exposed surfaces.

Material excavated from the trench shall be uniformly spread on adjacent areas, or otherwise disposed of as directed by the Engineer.

532.4. **Measurement.** Concrete Retards will be measured by the cubic yard, complete in place.

532.5. **Payment.** The work performed and materials furnished as prescribed by this item, measured as provided under "Measurement", will be paid for at the unit price bid for "Concrete Retards", which price shall be full compensation for all excavation; furnishing, hauling and placing all materials required in the construction (including any royalty costs); disposal of excavated material; and for all manipulation, labor, tools, equipment and incidentals necessary to complete the work.

ITEM 534

CONCRETE FOR STRUCTURE APPROACH SLABS

534.1. **Description.** This item shall govern for concrete structure approach slabs with reinforcement as shown on the plans, with or without curb as required, with or without slab support as required, constructed as herein specified on an approved subgrade or other base courses in accordance with this specification, in conformity with the thickness, details and typical cross sections shown on the plans and to the lines and grades established by the Engineer.

534.2. **Materials.** Unless otherwise specified on plans, materials and proportions for concrete used in construction for this item shall conform to the requirements as specified for Class "A" Concrete in the Item, "Concrete for Structures", or concrete as specified in the Items of "Concrete Pavement". Reinforcing steel, if required, shall conform to the requirements as specified in the Item, "Reinforcing Steel", or in the Items of "Concrete Pavement". Expansion joint filler shall be premolded material meeting the requirements specified in the Item, "Concrete Structures", or material meeting the requirements specified in the Items of "Concrete Pavement".

534.3. **Construction Methods.** The subgrade or foundation for the structure approach slab and component parts shall be excavated or shaped to line, grade and cross section and if considered necessary in the opinion of the Engineer, shall be compacted or hand tamped and sprinkled. If dry, the subgrade or foundation material shall be sprinkled lightly immediately before concrete is deposited thereon.

Outside forms shall be wood or metal of a section satisfactory to the Engineer, straight, free of warp, and of a depth equal to or greater than the depth of the specified section. The forms shall be securely staked to line and grade and maintained in a true position during the depositing of concrete. Inside forms for curbs shall be of approved material, shall be of such design to provide the curb required and shall be rigidly attached to the outside forms.

The reinforcing steel shall be placed in positions as shown on typical sections or design details. Care shall be exercised to keep all steel in its proper location.

The concrete shall be mixed, placed, consolidated, cured and finished as specified in the Item, "Concrete for Structures", or as specified in the Items of "Concrete Pavement".

534.4. **Measurement.** The quantities of concrete which constitute the complete and accepted work will be measured by the cubic yard in place. Only accepted work will be included and the dimensions used for measurement will be those shown on the plans or ordered in writing by the Engineer.

534.5. **Payment.** Work performed and materials furnished as prescribed by this specification, measured as provided under Measurement, will be paid for at the unit price bid per cubic yard for "Concrete for Structure Approach Slabs" which price shall be full compensation for excavation necessary in preparation of the subgrade, disposal of excavated material, preparation of subgrade; for furnishing, hauling and mixing all concrete materials; for placing, consolidating, curing and finishing all concrete; for all grouting and pointing; for furnishing and placing all drains and expansion joints and for all labor, tools, equipment and incidentals necessary to complete the work including reinforcing steel.

ITEM 536

CONCRETE MEDIANS AND DIRECTIONAL ISLANDS

536.1. **Description.** This item shall govern for cast in place concrete medians and/or concrete directional islands, with or without reinforcement, constructed on designated or prepared foundations in conformity with the lines and grades established by the Engineer, and to the details shown on the plans.

536.2. **Materials.** All concrete and concrete ingredients shall conform to the requirements for the class of concrete indicated on the plans as specified in the Item, "Concrete for Structures" or in the Items of "Concrete Pavement", except concrete used in an extrusion machine shall conform to the requirements of the Item, "Concrete Curb, Gutter, Curb and Gutter, Sidewalks and Driveways". Joint materials shall conform to the requirements of the Item, "Concrete Structures" or the Items of "Concrete Pavement". If reinforcing steel is required by the plans, it shall conform to the requirements of the Item, "Reinforcing Steel".

536.3. Construction Methods. The concrete shall be placed on the prepared foundation to the grade and dimensions specified. Forms, where required, shall be of wood or metal, straight, free of warp and of a depth equal to the depth of required section. They shall be securely held in place, true to line and grade, during the concrete placing operations. Reinforcing steel and/or dowels if specified shall be securely held in position.

Concrete shall be mixed and placed in a manner satisfactory to the Engineer. Each section shall be placed to the dimensions indicated on the plans. When required by the plans, the section shall be separated from adjacent curbs or adjoining sections by expansion or contraction joints of the type and size specified. When indicated on the plans or permitted by the Engineer, an extrusion machine may be used to form curbs or sections of the median or island.

After the concrete has been struck off and has set sufficiently, the exposed surfaces shall be thoroughly worked with a wooden float. Exposed edges shall be rounded to the required radius by the use of edging tools.

When the concrete has set sufficiently, the forms shall be carefully removed and the surface thus exposed shall be pointed up where necessary, then wetted and rubbed with a wood block to remove all form marks and other irregularities, producing a smooth, uniform finish. When directed by the Engineer, mortar consisting of one part Portland cement and two parts fine aggregate shall be used to plaster exposed surfaces. The mortar shall be applied with a template made to conform to the desired cross section shown on the plans. Cold weather placing of concrete shall be governed by conditions specified under the Item, "Concrete for Structures".

Immediately after finishing operations are completed, the surface shall be cured with Type 2, Class "A" curing compound for a period of 3 days in accordance with the requirements of the Item, "Membrane Curing". Other methods of curing as outlined in the Items of "Concrete Pavement", excluding "Asphalt Curing", and the Item "Concrete Structures" will be acceptable.

536.4. Measurement. Concrete Medians and/or Concrete Directional Islands will be measured by the linear foot or by the square yard complete in place.

536.5. Payment. The work performed and materials furnished as prescribed above and measured as provided under "Measurement" will be paid for at the unit price bid for "Concrete Median" or "Concrete Directional Island" which price shall be full compensation for cleaning and moistening median surfaces, furnishing, hauling, and placing all materials; for furnishing and placing reinforcing steel; for furnishing and placing joint materials; for curing and for all manipulations, labor, equipment, tools and incidentals necessary to complete the work.

ITEM 538

RIGHT OF WAY MARKERS

538.1. **Description.** This item shall govern for constructing, installing and/or removing and replacing reinforced concrete right of way markers on right of way lines at points designated on plans or as directed by the Engineer.

538.2. **Materials.** Right of way markers shall be either precast or cast in place of Class "A" Concrete conforming to the requirements of the Item, "Concrete for Structures".

Reinforcing steel shall conform to the requirements of the Item, "Reinforcing Steel".

The bronze disks where required may be purchased from the Department and charged to the Contractor at a price shown on the plans. Reimbursement to the State will be accomplished by making deductions from the Contractor's estimates for the actual cost of bronze disks purchased. Bronze disks are stored by the Department in regional warehouses.

Every effort will be made to maintain a stock of disks at each location and the disks usually will be shipped from the warehouse nearest to the required destination. The right is reserved to ship from any warehouse in case of necessity. Shipments will be made direct to the Contractor at the location designated by the Contractor with transportation charges to be paid by the Consignee. The Contractor shall place his order for disks through the District Engineer. Disks not used which were purchased from the Department may be returned to the District Warehouse upon completion of the contract and credit will be given.

Bronze disks purchased on the open market shall not be used unless they have been inspected and approved by the Engineer. It is the Contractor's responsibility to order bronze disks sufficiently in advance of work to insure delivery of disks meeting the Engineer's inspection requirements.

Markers to be used in "Removing and Replacing Right of Way Markers" shall be obtained in the removal of those existing on the old right of way.

538.3. **Construction Methods.** Right of way markers shall be cast and finished in accordance with the requirements of the Item, "Concrete Structures", except that a surface finish will not be required for the portion of the markers to be placed below the ground line. The shape and dimensions of the markers and the placement of steel shall be in accordance with details shown on the plans.

Markers shall be installed at designated points to the depth, lines and grades established by the Engineer, and as shown on plans. Backfilling shall be thoroughly tamped in 6-inch layers.

The Contractor will be required to exercise due care in the removal of right of way markers to prevent damage and will be required to replace markers damaged due to his carelessness at his expense.

538.4. **Measurement.** "Right of Way Markers", "Installing Right of Way Markers", or "Removing and Replacing Right of Way Markers", will be measured as each marker, complete in place.

538.5. **Payment.** The work performed and material furnished as prescribed by this item, measured as provided under "Measurement", will be paid for at the unit price bid for "Right of Way Markers", of the type specified, which price shall be full compensation for furnishing all materials, all preparation and erection, all hauling, and for all manipulation, labor, tools, equipment and incidentals necessary to complete the work.

When bids are requested for "Installing Right of Way Markers", satisfactory markers will be furnished the Contractor free of charge at sources indicated on plans for installation at designated points. The work, performed as prescribed by this item, and measured as provided under "Measurement", will be paid for at the unit price bid for "Installing Right of Way Markers", which price shall be full compensation for all hauling and erection, and for all manipulation, labor, tools, equipment and incidentals necessary to complete the work.

When bids are requested for "Removing and Replacing Right of Way Markers", markers will be removed from the old right of way line and installed at new locations as shown on plans. The work performed as prescribed above, measured as provided under "Measurement" will be paid for at the unit price bid for "Removing and Replacing Right of Way Markers", which price shall be full compensation for the removal of all existing markers as designated on the plans and the installation of such markers at new locations as shown on plans or as directed by the Engineer, which price shall be full compensation for removal, transportation to new locations, installation at new locations, and for all manipulation, labor, tools, equipment and incidentals necessary to complete the work.

ITEM 540

METAL BEAM GUARD FENCE

540.1. **Description.** This item shall govern for furnishing one line of metal beam rail element supported on timber or steel posts. Metal beam guard fence (barrier) shall consist of two or more lines of rail element sup-

ported on timber or steel posts. Metal beam guard fence and metal beam guard fence (barrier) shall be constructed of materials and workmanship as prescribed by these specifications, at such places as shown on the plans or as designated by the Engineer, and in conformity with the plans and typical details shown. Where shown on details the rail element shall be blocked out from the posts with spacers.

540.2. **Materials.**

(1) **Rail Elements.** The rail elements shall be of the deep-beam type fabricated to develop continuous beam strength and shall consist of metal plate or sheet formed into a beam not less than 12 inches wide and 3 inches deep as shown in the standard drawing of the plans. The beam shall be free from warp. When tested with a straight edge or string along either edge of a 12-1/2 foot sectional length of beam, the maximum deviation of the beam edges from the straight edge shall not exceed 1/2-inch at any point.

The steel for the rail elements shall conform to the requirements of AASHTO M-180. The rail shall be of a 10 gauge nominal thickness (0.1345 ± 0.008 inch) or shall be 12 gauge (0.1046 ± 0.008 inch) as shown on plans.

The rail element may be galvanized before or after fabrication in accordance with the requirements of ASTM Designation: A 123 or A 525, whichever is applicable, except that the galvanized coating shall not be less than 1.80 ounces per square foot of double exposed surface (single spot test).

Rail elements shall contain not more than 0.04 percent phosphorous nor more than 0.05 percent sulphur.

When specified on the plans, metal beam guard fence rail element will be salvaged from other parts of the job and shall be furnished free of charge to the Contractor for use on this job. This rail element shall not be subject to the above requirements, but shall meet requirements as directed by the Engineer. Only those rail elements determined by the Engineer to be acceptable shall be used on this project.

(2) **Posts.** The posts shall be either timber or steel as indicated on the plans and shall meet one of the following requirements.

Timber Posts. Timber posts and spacers, where spacers are required, shall be Southern Yellow Pine. All posts shall be round. Posts shall not be less, in any place, than 7 inches in diameter. The diameter shall be determined by means of a circumference-diameter tape. The average diameter at the base of the dome shall not exceed the specified diameter by more than 1 inch. The diameter at the butt of any post shall not exceed the diameter at the base of the dome of that post by more than 2 inches. The supplier shall stencil in the butt of each post the nominal diameter of the top 7 inches. The stenciled numeral shall be 1 inch high. The length of the posts shall not

vary more than 1 inch from the specified length. They shall be the length shown on the plans; the bottom and the top shall be fabricated as shown on the plans.

For domed posts, the dome shall be approximately hemispherical in shape and the radius of the dome of each post shall be one-half the diameter of the posts at the base of the domed portion. The dome shall be smooth and the distance from the top of the dome to the base of the dome shall not vary more than 1 inch at any location. For beveled posts, no posts will be accepted with less than 10 degree bevel. A tolerance of +5 degrees will be permitted. The posts shall be machine peeled and trimmed of all knots and knobs and shall be straight and smooth. The posts and spacers, where spacers are required, shall be sound and free from defects such as injurious ring shakes, unsound or loose knots, or other defects which might impair their strength and durability. Sound knots will be permitted provided they are not in clusters and they do not exceed one-third of the small diameter or least dimensions. Any defect or combination of defects which would be more injurious than the maximum allowable knot will not be permitted. A line drawn from the center of each end of the post shall not fall outside the center of the post at any point more than 1-1/4 inches.

Timber posts and spacers, where spacers are required, shall be bored and cut to the dimensions shown on the plans before being treated. They shall be treated with pentachlorophenol treatment, ACA treatment, CCA treatment or, if shown on the the plans and if they are not to be painted, with creosote treatment, all in accordance with the Item, "Timber Preservative and Treatment".

Timber posts and spacers, where spacers are required, shall be painted with two coats of good quality aluminum paint after the guard fence is erected unless specified otherwise on the plans.

When specified on the plans, timber posts for this item will be furnished free of charge to the Contractor by the Department at locations shown on the plans. Such posts shall not be subject to the above requirements, but shall meet requirements as directed by the Engineer. Posts furnished and not bored shall be bored by the Contractor. Unless specified otherwise on the plans, posts shall be painted with two coats of good quality aluminum paint after the guard fence is erected.

Steel Posts. Steel posts and spacers, where spacers are required, shall be of the rolled sections as shown on the plans. The posts and spacers, where spacers are required, shall be structural steel conforming to the requirements of ASTM Designation: A 36. The top of all posts shall be beveled, or square as required by detail and drilled or punched for bolts for rail attachments.

Steel posts and spacers, where spacers are required, shall be galvanized and shall conform to the requirements of ASTM Designation: A 123.

(3) **Fittings.** Fittings shall consist of bolts, nuts and washers and shall conform to the details shown on the plans and shall comply with the requirements as specified herein.

All bolts and nuts used shall be made by either the open hearth or electric furnace process and shall conform to the requirements of ASTM Designation: A 307. They shall be either hot-dip galvanized to conform to ASTM Designation: A 153, Class C or D, or mechanically galvanized to conform to ASTM Designation: B 454, Class 40.

Unless specified otherwise on plans, the concrete for terminal anchor posts or for embedment of other posts in concrete, where embedment is required, shall meet the requirements for Class "A" Concrete as specified in the Item, "Concrete for Structures". The rail element for the terminal anchor section shall be of the same materials as the rail element used throughout the project.

(4) **End Shoes.** End shoes, where required, shall conform to the details shown on the plans and to the materials and galvanizing requirements specified for rail elements.

540.3. **Sampling and Testing.** A sample of the rail and terminal section may be taken for each project or for each shipment to a project. Samples of bolts and nuts may also be required. All samples shall be furnished to the Department free of charge. The plate or sheet shall be sampled and tested in accordance with the requirements of ASTM Designation: E 8. For galvanized articles the weight of coating shall be determined by stripping in accordance with ASTM Designation: A 90.

The uniformity of the zinc coating shall be determined by visual inspection. If, in the opinion of the Engineer, visual examination is not conclusive, the uniformity of the coating may be determined by magnetic thickness gauge measurement, in accordance with ASTM Designation: E 376 or by the Preece Test as described in ASTM Designation: A 239. When the Preece Test is used, all items designated in ASTM Designation: A 153 as Class B-2, B-3, C and D shall withstand a minimum of four one-minute dips. All other items shall withstand a minimum of six one-minute dips.

540.4. **Construction Methods.** The posts shall be set plumb and firm to the line and grade shown on the plans. Unless the plans call for setting in concrete, the posts shall be backfilled by thoroughly tamping the material in 4 inch layers. The rail elements shall be erected to produce a smooth, continuous rail paralleling the line and grade of the roadway surface or as shown on the plans. The rail elements shall be joined end to end by bolts and lapped in the direction of traffic in the lane adjoining the guard fence.

When designated on the plans, the rail elements shall be curved before erection. Holes for special details may be field-drilled or punched, when approved by the Engineer.

Driving will be an acceptable method of attaining the established line and grade for posts. A structural-steel driving head suitable for the type and size of post being driven shall be used. Wood cushion blocks shall be used as necessary to prevent damage to the post. Rope mat, belting or other similar cushioning material may be used in addition to wood cushion blocks. Before driving timber posts, the ground adjacent to the post shall be excavated to a depth of 6 inches below finished shoulder grade, and after placing, each post shall be painted, where required by the plans, from 6 inches below the ground surface to 2 inches above, with one brush-coat application of hot asphalt, finished to a neat line at the top. Pilot holes may be required or permitted. The size and depth shall be determined by the Contractor with the approval of the Engineer based on results of trial operations of the first few posts driven. Loosened soil around the post shall be thoroughly tamped and any void between the soil and the post resulting from the driving shall be filled with suitable material and thoroughly compacted as directed by the Engineer.

Where posts are driven, the driving may be performed with power hammers (steam, compressed air or diesel) or gravity hammers approved by the Engineer.

Salvaged galvanized rail elements shall be thoroughly cleaned by means of steam cleaning, soap and water and rotating brushes, or other means as required to remove all dirt, grease, road oil, etc., from the surface of the rail element.

After erection, all parts of galvanized-steel posts, spacers where spacers are required, washers, bolts and rail elements on which the galvanizing has become scratched, chipped or otherwise damaged shall be thoroughly cleaned by wire brushing the damaged area to remove all loose, cracked or bruised spelter coating. The cleaned area shall be painted with two coats of zinc dust-zinc oxide paint conforming to the requirements of Federal Specification TT-P-641b or shall be repaired by application of galvanizing-repair compounds meeting Federal Specification 0-G-93 (Stick only) in accordance with the manufacturer's recommendations.

Where fabrication is done after galvanizing and where required by plans the cut edges and bolt holes shall be cleaned by brushing and the cleaned area shall be painted with two coats of zinc dust-zinc oxide paint conforming to the requirements of the Federal Specification TT-P-641b or shall be repaired by application of galvanizing-repair compounds meeting Federal Specification O-G-93 (Stick only) in accordance with the manufacturer's recommendations.

540.5. Measurement. This item will be measured by the linear foot of fence, complete in place, measurement being made upon the face of the rail in place, from center to center of end posts, from terminal-anchor sections, or, in the case of structure-railing connection, from the points shown on the plans except as follows: Where bids are requested for "Terminal-Anchor Sections", measurement will be made as each section, complete in place, each section consisting of a terminal-anchor post and one 25-foot rail element, as shown on the plans.

540.6. Payment. The work performed and material furnished as prescribed by this Item measured as provided under "Measurement", will be paid for at the unit price bid for "Metal Beam Guard Fence", "Metal Beam Guard Fence (Barrier)", "Metal Beam Guard Fence (Barrier) (Blockout)" or "Metal Beam Guard Fence (Blockout)", of the gauge specified which price shall each be full compensation for furnishing all materials, except salvaged rail elements where specified on the plans and timber for all posts furnished by the Department, including necessary boring for preparation, hauling and erection and painting of same; for setting posts in concrete when specified, and spacers where required and for all labor, tools, equipment and incidentals necessary to complete the work, including driving posts, excavating, backfilling and disposing of surplus material.

When bids are requested for "Terminal-Anchor Section" measured as provided under "Measurement", payment will be made at the unit price bid for "Terminal-Anchor Section" which shall be full compensation for furnishing the turn-down rail element, anchor assembly, terminal-anchor post and foundations or for installing the salvaged turn-down rail element anchor assembly, terminal-anchor post and foundations; and for all labor, tools, equipment and incidentals necessary to complete the work including excavation, backfilling and disposal of surplus materials.

ITEM 542

REMOVING METAL BEAM GUARD FENCE

542.1. Description. This item shall govern for the removal of existing metal beam guard fence and its storage at locations shown on plans or as directed by the Engineer.

542.2. Construction Methods. All rail elements shall be carefully removed in original lengths and neatly stacked. All fittings shall be removed from the posts and the metal rail. The posts shall then be loosened and pulled. Removal of all materials shall be performed in such manner that they will not be marred or damaged.

Posts which are set in concrete may be cut off 1 foot below new subgrade elevation and the concrete and bottom of post left in place. Any concrete less than 1 foot below subgrade shall be removed.

Eyebolts anchored to deadmen need not be removed but may be cut off or bent down at an elevation at least 1 foot below subgrade elevation and left in place along with the deadman.

All materials thus removed and salvaged shall be neatly stored at designated sites or disposed of as directed by the Engineer.

The Contractor will not be required to haul the salvaged material beyond the limits of the project unless otherwise specified on the plans.

542.3. **Measurement.** "Removing Metal Beam Guard Fence" or "Removing Metal Beam Guard Fence (Barrier)", will be measured by the linear foot. Measurement will be made upon the face of the fence in its original position from center to center of end posts. Where bids are requested for "Removing Terminal-Anchor Sections", measurement will be made as each section, complete in place, each section consisting of a terminal-anchor post and one 25 foot rail element.

542.4. **Payment.** The work performed as prescribed by this item, measured as provided under "Measurement", will be paid for at the unit price bid for "Removing Metal Beam Guard Fence", "Removing Metal Beam Guard Fence (Barrier)" or "Removing Terminal-Anchor Section" which price shall be full compensation for removing all materials, loading, hauling, unloading and satisfactorily storing; and for all manipulation, labor, tools, equipment and incidentals necessary to complete the work.

ITEM 544

REMOVING TIMBER POST GUARD FENCE

544.1. **Description.** This item shall govern for the removing of existing guard fence posts that have been placed on the road and the stockpiling of these posts at a designated location within the limits of the project.

544.2. **Construction Methods.** Guard fence posts shall be loosened and pulled. The removal of these posts shall be performed in such manner that they will not be marred or damaged. All posts shall be cleaned and neatly stored at designated sites as directed by the Engineer. The storage sites will be within the limits of the project.

544.3. **Measurement.** "Removing Timber Post Guard Fence" will be measured as each individual post removed.

544.4. **Payment.** The work performed as prescribed by this item and measured as provided under "Measurement" will be paid for at the unit price bid for "Removing Timber Post Guard Fence", which price shall be full compensation for removing and cleaning the existing posts, hauling and stockpiling, and for all labor, tools, equipment and incidentals necessary to complete the work.

ITEM 550

CHAIN LINK BARRIER FENCE

550.1. **Description.** This item shall consist of one line of chain link fabric supported on posts and constructed of material and workmanship as prescribed by this specification at such places as shown on the plans or as designated by the Engineer and in accordance with the plans and typical details shown.

550.2. **Materials.** All materials shall meet the requirements as indicated below:

(1) **Fabric.** Fabric and appurtenances shall meet the following requirements.

(a) The fabric width and height shall be as shown on the plans. The overall height of the fence when erected shall be the height above grade as shown on the plans. Unless otherwise shown on the plans, the fabric shall be woven into an approximately two-inch mesh such that in a vertical dimension of 23 inches along the diagonals of the openings there shall be at least seven meshes. The fabric shall have a knuckled finish for the top and bottom selvages. The wire in the fabric shall withstand a minimum tensile strength test of 75,000 pounds per square inch after galvanizing or aluminum coating. Except as provided herein, the chain-link-fence fabric shall conform to the specifications of ASTM Designation: A 392, Class I or ASTM Designation: A 491. The wire in the fabric shall be of the gauge specified on the plans.

(b) Between posts, the fabric shall be fastened to a top and bottom tension wire by steel wire ties of the gauge and spacing shown on the plans. The tension wire shall be at least 7-gauge galvanized coil spring steel of good commercial quality.

(2) **Posts, Braces and Gates.** Except for thin-wall, high-strength pipe posts, steel pipe used for posts and gate frames shall conform to the specifications of ASTM Designation: A 120. Thin-wall, high-strength pipe posts shall be manufactured by cold rolling using steel strip conforming to ASTM Designation: A 569. Steel sections used for posts and gate frames shall be a good commercial quality weldable steel. All material shall be new, and no used, re-rolled or open-seam material will be acceptable. All posts shall meet

the weight and length requirements shown on the plans. The fabric bands and wire ties shall conform to the gauge and spacing as shown on the plans and shall be of suitable design to fasten fabric to the posts. Wire ties of the gauge shown may be used in lieu of fabric bands. All fittings required for posts shall be pressed or rolled steel, forged steel, malleable iron or wrought iron of good commercial quality and spaced as shown on the plans. The cable shall be manufactured of galvanized annealed steel. The wire shall be cylindrical in form and shall be free from scales, inequalities, flaws and splits.

(a) **Line Posts.** Line posts may be either H-column, T-section, C-section or tubular. Tubular line posts shall be fitted with watertight malleable iron caps.

(b) **Terminal Posts.** All end, corner and pull posts shall be known as terminal posts and shall be of either round or square sections. All terminal posts shall be furnished with watertight malleable iron caps. Fabric shall be fastened to terminal posts by steel stretcher bars and stretcher bar bands fitted with carriage bolts and nuts of the size and spacing shown on the plans.

(c) **Gate Posts.** Gate posts shall be either round or square. All gate posts shall be furnished with watertight malleable iron caps. The fabric shall be attached to the gate posts by means of steel stretcher bars and stretcher bar bands fitted with carriage bolts and nuts of the size and spacing shown on the plans.

(d) **Gates.** The gate frames shall be fabricated from sections either round or square of the size and weight specified on the plans and shall be filled out with the same type fabric specified for the chain link fence. All gates shall be equipped with approved malleable iron or steel latches, stops and center rest. A satisfactory locking device suitable for padlocking shall be provided. The gates shall be hung by at least two steel or malleable iron hinges securely fastened to the posts. Hinges shall not twist or turn under the action of the gate, shall be capable of allowing a full 180-degree opening turn, shall be so arranged that a closed gate cannot be lifted off the hinges to obtain entry, and shall be easily operated by one person. All gates shall be equipped with a positive stop which will not permit any portion of the gate to swing over an adjacent traffic lane and shall be equipped with a positive means of maintaining the gate in a closed position.

(e) **Cables.** The cable shall be composed of seven wires. The diameter of the finished cable shall not be less than 3/8 inch. Cables shall be installed on all terminal posts, as shown on the plans, and shall extend to the adjacent posts. All corner and pull posts shall have cables on each side, if shown on the plans. All cables shall be installed with a 3/8 inch drop-forged eye-and-eye or eye-and-clevis turnbuckle.

550.3. Galvanizing and Aluminum Coating. All materials used in "Chain Link Barrier Fence" shall be hot-dip galvanized to meet the following requirements, except that fabric may be aluminum-coated. The zinc used for the coating shall conform to ASTM Designation: B 6 and shall be at least equal to the grade designated as "Prime Western".

The uniformity of the coating shall be determined by visual inspection. If, in the opinion of the Engineer, visual examination of the zinc coating is not conclusive, he may use the Preece Test as described in ASTM Designation: A 239. When so tested, all items shall withstand a minumum of six one-minute dips except for those items designated in ASTM Designation: A 153 as Class B-2, B-3, C and D which shall withstand a minimum of four one-minute dips.

Visual inspection shall be made to determine the quality of the coating. Excessive roughness, blisters, sal ammoniac spots, bruises and flaking, if present to any considerable extent, shall provide a basis for rejection. Where practicable, all inspection and tests shall be made at the place of manufacture prior to shipment and shall be so conducted as not to interfere unnecessarily with the progress of the work.

Damaged zinc coating shall be repaired by thoroughly wire-brushing the damaged area and removing all loose, cracked or weld-burned zinc coating. The cleaned area shall be painted with two coats of zinc-oxide-zinc-dust paint conforming to the requirements of Federal Specification TT-P-641b or approved equal. The paint shall be furnished by the Contractor at his expense.

(1) **Fabric.** The fabric shall be hot-dip galvanized after weaving to conform to ASTM Designation: A 392, Class 1, or the fabric may be aluminum-coated in accordance with ASTM Designation: A 491.

Fabric may be aluminum-coated with a minimum weight of coating of 0.40 ounce per square foot, or may have a zinc coating of not less than 1.2 ounces per square foot of the actual surface. The weight of zinc coating shall be determined in conformance with ASTM Designation: A 90. The weight of aluminum coating shall be determined in conformance with ASTM Designation: A 428.

(2) **Posts, Braces and Gates.** All posts, except for thin-wall, high-strength pipe posts, braces, frames and gates shall be hot-dip galvanized inside and outside in conformance with ASTM Designation: A 120 or A 123.

Thin-wall, high-strength pipe posts shall be externally hot-dip galvanized with a minimum weight coating of 0.9 oz. per sq. ft. After galvanization, thin-wall, high-strength pipe posts shall also be externally chromated by total immersion followed by application of clear polyurethane finish. Internally, thin-wall, high-strength pipe posts shall have either a hot dip

galvanized coating or a zinc base coating with thickness 0.5 mil plus or minus 0.2 mil. The coating shall be 81 percent zinc powder by weight.

(3) **Fittings, Bolts and Other Miscellaneous Hardware.** All fittings, bolts and miscellaneous hardware shall be either hot-dip galvanized in conformance with ASTM Designation: A 153, Class C or D, or mechanically galvanized in conformance with ASTM Designation: B 454, Class 40.

(4) **Tension Wire.** Tension wire shall have a minimum coating of 0.8 ounce per square foot of uncoated surface when tested in conformance with ASTM Designation: A 90.

(5) **Pull Cable.** Pull cable shall have a minimum coating of 0.8 ounce per square foot of uncoated individual-wire surface when tested in conformance with ASTM Designation: A 116.

550.4. **Sampling and Testing.** The Contractor shall furnish, upon request of the Engineer, samples of each component part of the fence including fittings. These samples shall be subjected to the galvanizing, weight, and where required, strength tests. A sample may be taken for each project or for each shipment to a project, when requested by the Engineer.

If any specimen tested fails to meet the requirements of this specification, two additional specimens shall be cut from the remainder of the sample and tested, both of which shall meet the requirements in every respect or the lot represented by the sample may be rejected.

550.5. **Construction Methods.** The Chain Link Barrier Fence shall be erected to lines and grades established by the Engineer in accordance with the details shown on the plans. The fence shall be true to line, taut and shall comply with the best practice for fence construction of this type.

(1) **Erection of Posts.** Posts shall be set plumb and permanently positioned and anchorages firmly set before fabric is placed. Posts shall be set in Class "B" Concrete, unless otherwise specified on the plans. Concrete and equipment therefor shall conform to the requirements of the Item, "Concrete for Structures". Hand mixing of concrete will be permitted on batches under 1/2 cubic yard. All batches exceeding this volume shall be machine mixed.

Concrete footings shall be carried down to at least the depth, and shall be not less than the dimensions shown on the plans. Where rock is encountered within the required depth to which the post is to be erected, a hole of a diameter slightly larger than the largest dimension of the post may be drilled into the rock and the post grouted in. The regular dimensioned concrete footing as shown on plans shall then be placed between the top of the rock and required grade shown on the plans. Posts shall be ap-

proximately centered in their footings. All concrete shall be placed promptly and compacted by tamping or other approved methods.

If the ground is firm enough to permit excavation of the post hole to neat lines, the concrete may be placed without forms by completely filling the hole. Under these conditions the earth coming in contact with the concrete shall be moistened to a depth of at least 2 inches prior to placing concrete. No curing will be required other than covering concrete with not less than 4 inches of loose moist material, free of clods and gravel, immediately after placing concrete.

Where the ground cannot be satisfactorily excavated to neat lines, forms must be used for footings. Under these conditions, when the soil is not moist, not less than one gallon of water shall be poured into each hole and as soon as this water has been absorbed, the concrete shall be placed. Not later than 24 hours after the concrete has been placed, the forms shall be removed. As soon as each form is removed, the footing shall be backfilled, with moistened material, and thoroughly tamped. The top of the concrete shall then be covered with not less than 4 inches of loose moistened material. All excess material from footings, including loose material used for curing, shall be disposed of in a manner satisfactory to the Engineer.

Pull posts shall be placed not over 500 feet apart in straight runs and at each vertical angle point, all as directed by the Engineer. Corner posts shall be placed at each horizontal angle point. Corner and pull posts shall have horizontal braces and tie rods as specified above and as indicated on the plans.

(2) **Erection of Fabric.** After all posts have been permanently positioned and anchorages firmly set, with the cables drawn taut with the turnbuckles, the fabric shall be placed by securing one end and applying sufficient tension to the other to remove all slack before making attachments. Fabric shall be fastened as shown on the plans and, unless otherwise specified on the plans, the bottom of the fabric shall be placed a normal distance of two inches above the ground line; however, over irregular ground this distance may vary between one inch and six inches for a distance not to exceed eight feet. Any necessary backfilling required, in order to comply with these provisions, will be considered as incidental work.

(3) **Electrical Grounds.** The fence shall be grounded where a power line passes over the fence. The ground shall consist of a copperweld rod 8 feet long and a minimum of 5/8-inch in diameter driven, or drilled in, vertically until the top of the rod is approximately 6 inches below the top of the ground. A No. 6 solid copper conductor shall be brazed to the rod and to the fence in such a manner that each element of the fence is grounded.

Grounds shall be placed at intervals not to exceed 1000 feet in straight runs. Each section of fence shall have at least one ground.

550.6. **Measurement.** Chain Link Barrier Fence of each height specified will be measured by the linear foot of fence measured at the bottom of the fabric along center line of fence from center to center of terminal posts, excluding gates. Gates will be measured as each gate, complete in place.

550.7. **Payment.** The work performed and material furnished as prescribed by this Item, measured as provided under "Measurement" will be paid for at the unit price bid for "Chain Link Barrier Fence" of the height specified which prices shall each be full compensation for furnishing and installing all fencing materials (except gates) including all miscellaneous fittings, pull cables, post caps, line wires, connection clips or wires; digging postholes and grouting in rock where required; furnishing and placing concrete for setting posts; furnishing and installing all electrical grounds; all hauling and handling charges; and for all manipulations, excavation, backfilling and disposal of surplus material.

Gates measured as provided under "Measurement" will be paid for at the unit price bid for "Pedestrian Gate" or "Vehicular Gate", of the type, height and opening specified which price shall each be full compensation for furnishing all materials; fabricating, preparation, hauling, handling charges and erecting, including all miscellaneous fittings, braces, latches, gate hinges, stops and center anchorage; and for all manipulations, labor, tools, equipment and incidentals necessary for complete installation.

ITEM 552

WIRE FENCE

552.1. **Description.** This item shall govern for constructing one line of fence supported on metal or wood posts in accordance with the details and at the locations shown on the plans. The fence shall consist of barbed wire or a combination of woven fence fabric and barbed wire as specified on the plans.

552.2. **Materials.**

(1) **Metal Posts and Braces.** Steel pipe used for posts and braces shall conform to the specifications of ASTM Designation: A 120. Steel sections used for posts and braces shall be a good commercial quality weldable steel. All material shall be new and no used, rerolled or open seam material will be acceptable. All posts and braces shall meet the weight and length requirements shown on the plans. Galvanized steel sections shall conform to ASTM Designation: A 123. All posts and braces, except galvanized products, shall be painted with an approved anti-corrosive paint and after installation all areas where the paint coat has been damaged shall be spot-

coated with paint of the same color as the shop coat. No other painting will be required. All fittings required for posts and braces shall be pressed or rolled steel, forged steel, malleable iron or wrought iron of good commercial quality and shall conform to the details shown on the plans.

(a) **Metal Line Posts, Pull Posts and Braces for Pull Posts.** Metal posts and braces shall be "H" column, tubular or any other approved shape and shall be properly adapted to provide means for attaching the fencing to the posts in a manner that will not damage the posts nor fencing material. Metal line posts, pull posts and braces for pull posts shall each be of the weight and dimensions shown on the plans. Line posts shall be provided with tapered anchor plates securely attached thereto. The anchor plates shall be of the area, size and weight shown on the plans. The anchor plate may be omitted provided the post is set in a concrete footing as shown on the plans.

(b) **Metal Corner, End and Gate Posts.** Metal corner, end and gate posts and braces shall be any one of the shapes specified for line posts. Metal posts shall each be of the weight and dimensions shown on the plans.

(2) **Untreated Wood Posts and Braces.** Untreated wood posts and braces shall be pine, cedar or mesquite of the length and size shown on the plans and shall be cut from sound timber. Posts shall have a minimum diameter as indicated on the plans and shall be approximately round, shall be trimmed of all knots and knobs and shall be straight and relatively smooth. The posts shall be free from defects such as injurious ring shakes, unsound or loose knots, splits or other defects that might impair their strength and durability. Sound knots will be permitted provided they are not in clusters and do not exceed one-third of the small diameter or least dimension of the posts. A line drawn from the center of each end of the post shall not fall outside the center of the post at any point more than 2 inches.

Braces shall be similar to the regular posts and shall be notched in place. Other types of braces, equal in strength and durability, may be used when approved by the Engineer.

(3) **Treated Wood Posts and Braces.** Treated wood posts and braces shall be pine or fir timber of the size and dimensions shown on the plans. The timber shall be sound and free from all decay, shakes, splits or any other defects which would weaken the posts or braces or otherwise make them structurally unsuitable for the purposes intended.

The posts and braces shall be round, square or sawed rectangular shape. The slope of grain in sawed, square or rectangular posts for the full length shall not exceed one in ten and knots shall be sound, tight, well spaced and shall not exceed one-third of the small diameter or least dimension of the post. A line drawn from the center of each end of the post shall not fall outside the center of the post at any point more than 2 inches. All posts and

braces shall have a creosote, pentachlorophenol, ACA or CCA treatment, all in accordance with the Item, "Timber Preservative and Treatment", with the minimum net retention of preservative in accordance with the amounts shown for "POSTS FOR WIRE FENCE-ROUND, Southern Pine". Posts shall be inspected at time of treatment. Round posts and braces shall be peeled to remove all outer bark and all inner cambium bark, except that occasional strips of bark may remain if not over 1/2-inch wide or over 3 inches long. All knots shall be trimmed flush with the sides, spurs and splinters removed and the ends cut square. The allowable taper from end to end of round posts and braces shall not exceed 1-1/2-inches.

(4) **Gates and Gate Posts.** Gates and gate posts shall be of the materials and to the dimensions detailed on the plans.

(5) **Barbed Wire.** Barbed wire shall conform to ASTM Designation: A 121, Class 1. The barbed wire shall consist of two strands of 12-1/2-gauge wire, twisted with two-point 14-gauge barbs spaced not more than 5 inches apart, or may be as specified on the plans for high tensile wire.

(6) **Wire Mesh.** Wire mesh fabric shall conform to ASTM Designation: A 116, Class 1. The wire mesh shall be of the height and design shown on the plans. The top and bottom wires shall be 10-gauge minimum and the intermediate wires and vertical stays shall be 12-1/2-gauge minimum.

552.3. **Miscellaneous.** Galvanized bolts and nuts for attaching braces and straps to metal posts and suitable galvanized devices for holding barbed wire and wire mesh firmly in position shall be of good commercial quality and design.

Staples used to secure barbed wire and wire mesh fabric to wood posts shall be not less than 1-1/2-inches long and the wire from which they are made shall be galvanized.

552.4. **Construction Methods.** Fence posts shall be spaced at the intervals and set to the depth shown on the plans. Posts shall be set in a vertical position. Corner and pull posts shall be braced in two directions. End and gate posts shall be braced in one direction. Where alignment changes 30-degrees or more, a corner post shall be installed. At alignment angles varying from 15 to less than 30-degrees, the angle post shall be braced to adjacent line posts by diagonal tension wires. Where steel posts are specified, a pull post assembly shall be installed at approximately 500-foot intervals and where wood posts are specified the spacing of pull post assemblies shall be approximately 1000-feet, unless otherwise shown on the plans. Metal line posts may be driven in place providing such driving does not damage the posts. Metal corner, end, pull posts and braces shall be set in Portland cement concrete footings crowned at the top to shed water. All posts shall be placed the minimum depth below ground as shown on the plans or as directed by the Engineer. Posts shall be set plumb and firm to

the line and grade shown on the plans. Backfilling shall be thoroughly tamped in 4-inch layers. The timber post braces shall be notched as shown on plans.

The corner, end or angle post assembly shall be installed before stretching the wire between line posts. At all grade depressions where stresses tend to pull the posts out of the ground, the fencing shall be snubbed or guyed at the critical point by means of a double 9-gauge galvanized wire connected to each horizontal line of barbed wire or to the top and bottom wire or wire mesh fabric, and to a deadman weighing not less than 100 pounds, buried in the ground as shown on plans. The fencing shall be stretched before being snubbed and guyed. Existing cross-fences shall be connected to the new fences and corner posts with braces which shall be placed at junctions with existing fences. The barbed wire and wire fabric shall be drawn taut and fastened to posts with galvanized ties or staples as specified on the plans.

552.5. **Measurement.** Fencing shall be measured by the linear foot of wire fence, measured at the bottom of the fabric along the centerline of the fence from center to center of end posts, excluding gates. Gates will be measured as each gate, complete in place.

552.6. **Payment.** The work performed and material furnished as prescribed by this item, measured as provided under "Measurement" will be paid for at the unit price bid for "Wire Fence" of the type shown on the plans, which price shall each be full compensation for furnishing and installing all fencing materials (except gates); for all preparation, hauling and installing of same; and for all labor, tools, equipment and incidentals necessary to complete the work, including excavation, backfilling and disposal of surplus material.

Gates measured as provided under "Measurement" will be paid for at the unit price bid for "Gate" of the type, height and opening shown on the plans, which price shall be full compensation for furnishing all materials; for fabricating; for all preparation, hauling and erection; for all labor, tools, equipment and incidentals necessary for a complete in-place gate installation.

ITEM 556

PIPE UNDERDRAINS

556.1. **Description.** This item shall govern for pipe underdrains embedded in filter material, constructed at such places as shown on the plans or as directed by the Engineer and in accordance with lines and grades established by the Engineer.

556.2. Materials.

(1) Pipe. The pipe shall be of the type shown on the plans and the size indicated shall be the inside diameter. The pipe shall meet the following requirements:

Type 1. Vitrified Clay or Concrete Pipe.

The pipe may be either thoroughly and perfectly burned or glazed vitrified clay or non-reinforced concrete. The pipe shall be of first quality hub-and-spigot style, sound, without warps or cracks or other imperfections and shall be sufficiently tough so that it may be cut with a chisel and hammer.

Type 2. Clay Drain Tile.

Standard clay drain tile shall conform to the specifications of AASHTO Designation: M 179.

Type 3. Concrete Drain Tile.

Butt-end concrete drain tile shall conform to the specification of ASTM Designation: C 412. Tongue and groove concrete drain tile shall conform to the specifications of ASTM Designation: C 118.

Type 4. Perforated Asbestos-Cement Pipe.

Asbestos-cement pipe and fittings shall conform to the specifications for Asbestos-Cement Perforated Underdrain Pipe of ASTM Designation: C 508.

Couplings shall be the sleeve type suitable for holding the pipe in alignment without the use of sealing compounds or gaskets. The coupling need not be of the type that effectively seals the joints. Tapered couplings will be acceptable.

Type 5. Perforated Clay Pipe.

Perforated clay pipe shall conform to the specifications for standard strength perforated clay pipe of AASHTO Designation: M 65 except that extra strength clay pipe may be substituted for standard strength clay pipe.

Type 6. Perforated Corrugated Metal Pipe.

Perforated corrugated metal pipe shall be fabricated from corrugated galvanized sheets and shall comply with AASHTO Designation: M 36 and with the following modifications: The pipe may conform to any one of the types specified in M 36.

Type 7. Perforated Corrugated Metal Pipe (Bituminous Coated).

The pipe shall conform in all particulars to the requirements specified

above for perforated corrugated metal pipe. The pipe shall be uniformly coated inside and out with a bituminous coating to a minimum thickness of 0.05 inch.

The bituminous material used to coat the pipe shall meet the following requirements when tested in accordance with Test Method Tex-522-C:

Solubility, % by wt. in Trichloroethylene	99.5 min.
Brittleness Test	Pass
Flow, inches	0.25 max.

Type 8. Perforated Bitumenized-Fiber Drainage Pipe.

Perforated Bitumenized-Fiber Drainage Pipe shall conform to the specification requirements of ASTM Designation: D 2818.

Type 9. ABS Perforated Pipe.

ABS pipe shall be extruded and the fittings molded from virgin acrylonitrile-butadiene-styrene (ABS) plastic material conforming to ASTM Designation: D 1788, Type 4, except that the minimum heat deflection temperature is 180 F. The Contractor shall furnish certified test reports as evidence that the material used for the project meets ASTM requirements. The dimensions of ABS pipe shall be as shown in Table 1. Fittings shall conform to the manufacturer's standard for the particular size of pipe required.

TABLE I

NOMINAL SIZE, IN.	INSIDE DIA. IN., MIN.	THICKNESS OF BARREL IN., MIN.
4	3.82	0.19
6	5.70	0.28

Perforations shall conform to the requirements for Type 5 pipe underdrains. The crushing strength of ABS pipe shall meet or exceed the minimum values in Table II when tested in accordance with the flat-plate loading method as outlined in ASTM Designation: 2412.

TABLE II

NOMINAL SIZE, IN.	MIN. STRENGTH LB. IN.
4	179
6	604

The pipe shall withstand at least 35 percent vertical deflection without rupture of the pipe wall, and the stiffness shall equal or exceed the values at 5 percent deflection. Vertical deflection shall be computed as follows:

$$\text{Percent Deflection} = \frac{\text{Reduction Vert. I.D.}}{\text{Nominal I.D.}} \times 100$$

The ends of ABS pipe, couplings and fittings shall be perpendicular or square to the longitudinal axis of the main body within a maximum angle of 3 degrees. The outer and inner surface of the pipe shall be free from blisters, voids and discontinuities.

Type 10. Perforated Corrugated Polyethelene Plastic Tubing. Tubing shall comply with AASHTO Designation: M 252.

(2) Filter Material. Filter material for use in backfilling trenches under, around and over underdrains shall consist of hard, durable, clean sand, gravel, crushed stone, crushed shell or other material specified on the plans and shall be free from organic matter, clay balls or other deleterious matter. Unless otherwise shown on plans crushed limestone will not be permitted.

The percent composition by weight of the filter material in place shall conform to the following gradings:

PERCENT RETAINED ON SIEVE

Sieve Size	Type A	Type B	Type C	Type D	Type E	Type F
2"	—				Shall con-	As
1-1/2"	—		0-10		form to the	Shown
3/4"	—	0-10	20-40		Item, "Aggre-	on
3/8"	—	15-35	—	0	gate for Sur-	Plans
No. 4	0-10	35-55	40-60	0-5	face Treat-	
No. 8				0-20	ments" of	
No. 16				15-50	the type and	
No. 30				40-75	grade as	
No. 50				70-90	shown on	
No. 100				90-100	plans	

That portion of the filter material of Type A, B or C that is finer than No. 4 sieve shall be graded as follows:

Sieve Size	Percent Retained
No. 4	—
No. 20	35-65
No. 50	75-100

The loss by decantation shall not exceed one percent on the material retained on the No. 4 sieve and shall not exceed four percent on the material

passing the No. 4 sieve. Type E material shall conform to the Item, "Aggregate for Surface Treatments". Unless otherwise shown on the plans, Type B or Type C filter material, at the option of the Contractor, shall be used around underdrains. If Type A or Type D filter material is specified, it shall not be placed within 6 inches of any perforation. If Type E filter material is specified it shall not be placed within 6 inches of the water bearing strata.

556.3. **Construction Methods.** The excavation of each trench shall begin at its outlet and proceed toward its upper end. The trench must not be excavated below the proposed grade line and shall be located as indicated on the plans or as directed by the Engineer, and true to line and grade. The trench shall be dressed with a tile-hoe or shovel in such manner that a groove will be made to conform to the shape of the pipe. When perforated metal pipe is used and the trench is founded in pervious material, a thin layer of tamped impervious material shall be placed on the bottom of the trench as shown on the plans or indicated by the Engineer. If the bottom of the trench is founded on impervious material the tamped layer shall be omitted. The sections shall be jointed with band couplers. All perforated pipe shall be laid with the perforations on the sides below the horizontal axis with the perforated sections centered on the flow line.

When clay or concrete pipe is used and the trench is founded in pervious material, a bottom course of the specified filter material shall be placed and tamped to a uniform depth of 2 inches. The pipe shall then be firmly embedded in the filter material, hub end upgrade, and the spigot firmly centered into the adjacent hub end or in the case of butt-end type drains with an open joint of approximately 3/8 inch.

The open pipe joints shall then be covered with approved two-ply tar paper strips not less than 6 inches in width and of sufficient length to permit the ends being turned outward and laid flat on the bottom course of filter material on each side for a distance of 3 inches. When the trench is founded in impervious material the 2 inch bottom course of filter material shall be omitted, the pipe laid directly in the trench and filter material placed in the trench to a depth of 2 inches on each side of the pipe. The two-ply tar paper strips shall then be placed as specified above.

Asbestos-cement pipe shall be laid as specified above for clay and concrete pipe, and the sections shall be joined by couplers. No tar paper strips shall be used.

After the pipes have been laid and approved, the filter material shall be carefully placed to the depth shown on the plans and in such manner as not to displace the pipe or joint covering around and over the pipe. The depth of filter material shall in no case be less than 12 inches above the bottom of the pipe and such depth shall be placed where no dimension is shown on the

plans. The remainder of the trench shall be backfilled with suitable materials which shall be tamped in layers not exceeding 4 inches.

Approved plugs shall be placed in the upper ends of all pipes and all exposed ends of underdrains shall be covered with 1/2-inch galvanized hardware cloth as directed by the Engineer.

When required by the plans, concrete riprap or headwalls of the dimensions shown on the plans shall be constructed at the outlet ends of the pipe underdrains. Concrete materials and proportions shall conform to the requirements specified for Class "B" Concrete as set out in the Item, "Concrete for Structures".

Perforated ABS pipe shall be jointed by couplers or solvent welding according to the manufacturer's recommendation. No tar paper strips shall be used.

556.4. Measurement. Work and accepted materials for "Pipe Underdrains" will be measured by the linear foot of pipe measured along the slope and shall include the length of all elbows, wyes, tees and other branches.

"Underdrain Excavation" shall be measured in cubic yards by the method of average end areas calculated from limits of excavation as shown on the plans or if not indicated on the plans shall be computed within the following limits:

(1) The horizontal limits for computing pay quantities shall be as shown in the following table:

Depth of Trench (Feet)	Limits of Excavation for Payment, Dist. in Ft. Outside Neat Lines of Pipe Underdrain
0 to 6	1.00
6 to 10	1.50
10 to 15	2.00
Over 15	2.50

(2) The upper limits for computing pay quantities of "Underdrain Excavation" shall be the ground surface as it exists prior to start of construction operations except where the excavation is performed within roadway or ditch excavation areas, "Underdrain Excavation" will include only materials below or outside the limits of the completed road section.

(3) The lower limits for computing pay quantities of "Underdrain Excavation" shall be a plane at the lower limits of the pipe.

"Filter Material" shall be measured by the cubic yard complete in place. Horizontal limits for computing quantities shall be the same as specified for "Underdrain Excavation".

556.5. **Payment.** Work performed and materials furnished as prescribed by this item and measured as provided under "Measurement" will be paid for at the unit price bid for "Pipe Underdrains" of the type and size specified. The unit price shall be full compensation for furnishing and placing all materials; for all plugs and screens; and for all labor, tools, equipment and incidentals necessary to complete the work except "Underdrain Excavation" and "Filter Material".

All underdrain excavation measured as provided under "Measurement" will be paid for at the unit price bid for "Underdrain Excavation" which price shall be full compensation for all excavating, bracing and removal of same, backfilling of trench, disposal of excess materials and all labor, tools, equipment and incidentals necessary to complete the work.

Filter material measured as provided under "Measurement" will be paid for at the unit price bid for "Filter Material" or "Filter Material" of the type specified. The unit price shall be full compensation for furnishing and placing all filter material including tamping, all labor, tools, equipment and incidentals necessary to complete the work.

All riprap or headwalls required by the plans will be measured and paid for in accordance with the provisions of the Items of "Riprap" or "Concrete for Structures".

ITEM 575

EPOXY

575.1 **Description.** This Item shall govern for various types of epoxy materials suitable for highway use. All of these materials consist of a resin component and a hardener component which must be mixed just prior to use to produce the finished epoxy. Unless otherwise indicated, these materials should not be used if the substrate temperature is below 50 F. The specific materials covered by this Item are as follows:

(1) Traffic marker adhesives
(2) Concrete adhesives
(3) Binder for producing epoxy grout or concrete
(4) Epoxy for crack injection
(5) Epoxy coating for concrete
(6) Surface sealing of cracks

575.2 Epoxy Materials Requirements.

(1) **General.** Epoxy materials described herein shall be in accordance with Department D-9-6100 specifications. Additional information regarding epoxy characteristics and copies of specification D-9-6100 are available from the State Department of Highways and Public Transportation, Materials and Tests Engineer, 38th and Jackson Streets, Austin, Texas 78703.

(2) **Packaging, Labeling and Storage.** The components shall be packaged in suitable, well-sealed containers clearly labeled as to the type material and the ratio of the components to be mixed by volume. Any special instructions regarding mixing shall be included. The label shall show resin or hardener component, the brand name, name of manufacturer, lot or batch number, date of packaging and the quantity contained therein. Caution warnings regarding contact of the epoxy with skin and eyes must be included on the labels.

The epoxy components must be stored at temperatures between 60 F and 100 F. Any material which shows evidence of crystallization, lumps, skinning, extreme thickening, or settling of pigments which cannot be readily redispersed with normal agitation shall not be used.

(3) **Mixing.** Prior to use, each component shall be stirred to redisperse any settling or separation of the fillers and liquid portions. The components shall then be placed immediately in the proper reservoir when used in automatic mixing and dispensing equipment. For application by other means, the components must be properly proportioned and mixed until a uniform color and appearance are obtained. Unless otherwise indicated, no addition of solvents is allowed.

575.3 Application and Surface Preparation. Requirements on application and preparation of the surface upon which the epoxy is to be placed shall be as directed in the applicable specification item.

575.4. Epoxy System. The materials covered by this specification and their intended use are shown below.

(1) **Traffic Marker Adhesive System.** This system consists of five basic types of epoxy adhesive for bonding ceramic, plastic or metal markers to roadway or bridge surfaces.

Types I and I-M - Rapid Setting Marker Adhesive (for use when a very fast set is required or if markers must be placed when pavement temperature is below 50 F.

Types II, II-M and II-MA - Medium Setting Marker Adhesive.

Types III and III-M - Standard Setting Marker Adhesive.

Types IV and IV-M - Slow Setting Marker Adhesive (for use where setting time is not a consideration).

Those adhesives designated as Types I through IV are intended for hand mixing and application. On projects where the adhesive is to be handled by automatic metering, mixing and application equipment, Types I-M through IV-M, which are designated specifically for machine application, shall be used. Type II-MA adhesive is designed for placement of all-weather markers. For all types of marker adhesives, the resin component shall be pigmented white and the hardener component black.

The type of adhesive to be used for placing ceramic or plastic markers on a specific project shall be designated by the Engineer, based upon the setting time required under the prevailing weather and traffic conditions.

(2) **Concrete Adhesives System.** This system consists of three types of epoxy adhesive with different viscosities designed to bond fresh Portland cement concrete to existing Portland cement concrete, hardened concrete to hardened concrete and steel to fresh or hardened concrete.

Type V - Standard (medium viscosity) for applying to horizontal and vertical surfaces. This material is suitable for surface sealing of fine cracks in concrete.

Type VI - Low viscosity for application with spray equipment to horizontal surfaces.

Type VII - Paste consistency for overhead application and where a high build-up is required. This material is suitable for surface sealing of cracks in concrete which are veed out prior to sealing and for grouting of dowel bars where clearance is 1/16 inch or less.

Any specific coloring of resin and hardener components shall be as directed by the Engineer.

(3) **Epoxy Binder System.** This system is intended for mixing with selected aggregates to produce an epoxy mortar or concrete for grouting dowel bars or repairing spalls and other defects in existing Portland cement concrete.

Type VIII - Shall comply with the requirements for Type VI epoxy except that the mixing ratio of resin and hardener shall be as specified by the manufacturer and the requirement for ability to bond fresh Portland cement concrete to hardened concrete does not apply.

The aggregates used with the epoxy binder to form the epoxy mortar or concrete must be clean and surface dry.

(4) **Crack Injection System.** This system is a low viscosity epoxy material designed for pressure injection into cracks in existing concrete to restore the structural integrity. The system shall be capable of bonding to damp surfaces. This system is designated as Type IX epoxy.

(5) **Epoxy Coating System.** This is a high-solids epoxy coating de-

signed for application by brush or roller. The material can also be applied by airless spray by addition of a maximum of five percent toluene solvent at the direction of the Engineer.

Type X — Epoxy coating for waterproofing of pier caps. This material may also be used to coat the interior concrete block walls of comfort stations and as a coating for concrete picnic tables and benches.

575.5 **Measurement and Payment.** No direct measurement or payment will be made for the work to be done or for the materials to be furnished under this item, but they shall be considered subsidiary to the particular items required by the plans and specifications.

ITEM 576

EXCAVATION AND FORM WORK

576.1. **Description.** This item shall govern for excavation, grading, leveling, backfill and form work required to construct the various structures and installation of this contract, except for roadway items covered by other bid items.

The Contractor shall carry on his work with special care at all times to maintain the natural surroundings and existing structures in an undamaged condition. Trees and planting shall be protected by barriers where necessary and trucks and equipment shall be restricted to areas designated by the Engineer.

576.2. **Construction Methods.** No excavation shall be made through existing paving, sidewalks, concrete curbs and gutters unless otherwise noted on plans. Electrical and plumbing lines crossing these areas shall be bored or jacked under the finished surfaces in an approved manner unless otherwise noted on plans. Boring by means of a high pressure water jet will not be permitted. Conduits installed for lines under paving shall be of material and of diameters as called for on plans.

Excavation in sodded areas shall be backfilled with materials similar to that in the adjacent soil, compacted so no settlement will occur, and replanted with sod to match the adjacent planting.

Minimum depth for all underground electrical lines shall be 24 inches below the finish grade line, unless otherwise shown on the plans. Depth for plumbing lines shall be established on the job to conform as required to the natural grades and existing conditions, unless otherwise shown on the plans.

All foundation walls shall be formed true to line with straight sides and all other details formed to shapes shown on plans.

The location of the various structures and the elevation of foundations, slabs and footings are indicated on the plans along with the existing grades and the proposed finish grade lines. These shall establish the volume of excavation work, filling and grading work to be performed.

The finished grade shall slope away from each structure, to the limits indicated on the plans, with a maximum slope of 1 to 6, unless otherwise shown on plans or as directed by the Engineer.

All excavation shall be inspected and approved by the Engineer before concrete is placed. The suitability of various strata encountered for foundations shall be determined by the Engineer.

The Contractor shall remove all water which may accumulate in the excavations and shall construct all shoring necessary during the prosecution of the work.

Fill for the finished site grading shall be top soil stripped from excavated areas on this site or transported material having the same characteristics as the existing top soil on this site. This material shall be applied in layers, sloping away from all structures and compacted to the density of the surrounding soil.

The area to be occupied by each building structure shall be stripped of topsoil to a depth necessary to remove all vegetation, but not less than 6" below the existing grade. All roots, boulders and underground debris shall be removed from this area.

The bottom of this excavation shall be dense, undisturbed soil suitable for supporting the fill material and building slab above. If deemed necessary by the Engineer, the bottom of the excavation shall be compacted by means of a mechanical hand tamper, vibrating roller or a wheeled vehicle. Regardless of whether compacted or not, the bottom of the excavation shall be brought to optimum moisture content and shall be maintained in this condition until the application of the fill material.

Material for backfill beneath each building structure shall be suitably inert material having a Plasticity Index not exceeding 12 when tested in accordance with Departmental testing procedures. The material may be processed or pit-run material but shall meet with the approval of the Engineer. Material shall be placed in not greater than 6 inch layers with each layer thoroughly compacted before applying succeeding layers.

Trenches through the compacted fill for forming the floor beams under the building may be dug with a trenching machine or excavated by hand. Care should be exercised to prevent caving of the trench sides. All loose fill material shall be removed from beam trenches before pouring concrete.

The Contractor shall remove and adequately store all sod from excavated areas and shall replace all sod after final filling and grading. Additional sod of the same species as the original shall be furnished and installed by the Contractor as may be necessary. Minimum planting shall consist of sprigging or spot-sodding on 12 inch centers.

Forms shall be built true to dimensions shown, with proper allowances and provisions made for openings, inserts and other features shown and detailed.

Forms shall generally be of well seasoned dimension lumber framing, faced with exterior grade plywood providing a smooth face for concrete. Braces, shores and supports shall be provided so that forms will support all loads until the concrete has reached adequate strength.

Forms for all slabs on grade shall be set so that sufficient slope is provided to adequately drain water to the outside edge.

Where slopes for any of the various structures are not shown on the plans, the Contractor shall consult the Engineer as to the proper slope to provide.

A deflection greater than 1/4 inch in any form after concrete is in place shall be cause for removal of all concrete against the deflected form, and the realigning and re-shoring of that form at the direction of the Engineer.

Slab screeds shall be of nominal 2 inch lumber and shall be set at the exact slab thickness called for.

All underfloor piping and conduit shall be placed in the compacted fill beneath the floor slab and shall be in accordance with local codes.

Connections shall be brought to proper height above finished floor line before concrete is poured.

All excavations for utility lines beneath the floor shall be backfilled material and tamped to proper density.

576.3. **Measurement and Payment.** The work performed, materials furnished and all labor, tools, equipment and incidentals necessary to complete the work under this item will not be measured nor paid for directly but will be considered subsidiary to the various bid items of the contract.

ITEM 578

DRINKING FOUNTAIN

578.1. **Description.** This item shall govern for all materials and work necessary for the installation of the drinking fountain as shown on the plans and as provided for in the specifications for this project.

578.2. **Materials.** Brick, stone, concrete, aggregates, plumbing items, and incidental materials shall conform to the requirements of the Items, "Arbor Unit", and "Water Mains and Drains", and/or as shown on the plans.

If specified on plans, a commercial, prefabricated drinking fountain, of the size and type specified, shall be furnished and installed.

578.3. **Construction.** The drinking fountain shall be constructed of the materials shown on the plans and to the same quality of workmanship stipulated for the Item "Arbor Unit".

When a commercial, prefabricated drinking fountain is specified on the plans, the fountain shall be installed in strict accordance with the construction details shown on the plans, and/or the manufacturer's installation diagrams.

578.4. **Measurement.** Work and accepted material as prescribed by this item shall be measured as each unit of drinking fountain complete in place. The drinking fountain shall consist of the individual drain and disposal system, or the drain line from the drinking fountain to the main drain line, whichever is shown on the plans, the fountain structure and slab, and the length of pipe to and including the gate valve and covered valve box.

578.5. **Payment.** The work performed and materials furnished, as prescribed by this item, measured as provided above, shall be paid for at the unit price bid for "Drinking Fountain". Said payment shall be full compensation for furnishing, preparing, hauling, and installing all materials, for excavation and backfill, for all plumbing, piping, and specialty items, and for all labor, tools, equipment, and incidentals necessary to complete the work.

ITEM 580

ARBOR UNIT

580.1. **Description.** This item shall govern for all materials, work and incidentals necessary to construct, in place, an arbor unit structure of the type shown on the plans, complete with fixtures specified on the plans.

580.2. Materials. Each arbor unit shall be constructed of the materials designated on the plans in accordance with the details shown on the plans. When specified on the plans, building materials shall match the materials used in the existing park structures. The materials designated on the plans shall conform to the following applicable specifications.

All concrete shall be Class "A" conforming with the Item, "Concrete for Structures". Placing and finishing of concrete shall be as specified in the Item, "Concrete Structures".

Bar reinforcement shall conform to ASTM Designation: A 615, Grade 40 and wire fabric reinforcement shall conform to ASTM Designation: A 185 in accordance with the Item, "Reinforcing Steel".

Brick shall be Grade SW, Type FBX as specified in ASTM Designation: C 216 unless otherwise noted on the plans and shall be of the size and type indicated on the plans. Fire Brick shall be a standard brand meeting the approval of the Engineer. Brick samples shall be submitted to the Engineer for approval before any brickwork is initiated.

Stone materials for masonry of the type shown on the plans shall be sound, durable, free from structural defects and shall be free from earth, clay, oil or other foreign substances. Stone shall be of the type, shape and sizes designated on the plans. Stone samples shall be submitted to the Engineer for approval before any stonework is inititated.

Lightweight concrete block shall conform with ASTM Designation: 90, Grade N, Type 1, Loadbearing, for compressive strength and absorption. All units shall be of the size, type, and shape shown on the plans. All units shall be free from chips, cracks or other defects which would impair the strength and performance, or mar the appearance of the construction. The lightweight concrete block manufacturer must be approved by the Engineer. Filler for concrete blocks shall be as specified on the plans.

All timber, dimensioned or otherwise, shall be sound, new, kiln dried in good condition, straight and free from defects which would mar its appearance or impair its strength.

All timber shall be inspected by the Engineer prior to acceptance for use. Visual inspection by the Engineer will be acceptable for the purpose of this item.

Square and rectangular structural tubing shall conform to ASTM Designation: A 500, Grade B. Size and shape shall be designated on the plans. Round structural tubing shall be of the size and weight designated on the plans and shall be in conformance with ASTM Designation: 501, unless otherwise noted on the plans. All miscellaneous steel items shall conform to ASTM Designation: A 36.

Minimum surface preparation shall be in conformance with Steel Structures Painting Council current specification SSPC-SP2-63T, hand tool cleaning. Prime coat paint shall be equal in performance to Federal Specification TT-P-636d.

All wood shingles shall be hand split, western red cedar shakes sized as shown on the plans.

Roofing felt under wood shingles shall be 15 lb. dry, unsaturated deadening felt. Roof sheathing shall be as specified on the plans.

Materials used for metal roof decking shall conform to the requirements of the Metal Roof Deck Technical Institute, and shall be of the size, type, and kind shown on the plans.

Materials for corrugated cement asbestos roofing shall be as specified on the plans, with a nominal thickness of 3/8 inch, minimum weight of 3.7 lbs. per sq. ft., and corrugated on 4.2 inch centers.

Fasteners shall be 1/4 inch by 3 inch cadmium plated stove bolts with neoprene and steel washers and steel nuts or other fasteners as may be indicated on the plans.

Primer shall be as specified on the plans.

Flashing shall be of the type and kind designated on the plans and shall be installed as detailed on the plans.

Park Stoves may be obtained from the Department. Each Park Stove purchased from the Department will be charged to the Contractor at the price noted on the plans. Reimbursement to the Department will be accomplished by making deductions from the Contractor's partial payments for the actual cost of each Park Stove. Shipments will be made direct to the Contractor at the location designated by the Contractor with shipping charges paid by him. The Contractor shall place his order for Park Stoves with the Engineer.

Park Stoves may be purchased on the open market, but shall not be used until inspected and approved by the Engineer.

Paint for Park Stoves shall be fire resistant, zinc grey of a good commercial grade.

When a Fireplace or an Incinerator is called for on the plans, the metal on said fixtures shall be coated with a black paint of a good commercial grade.

All reducing oils and thinners for paints and primers shall be as prescribed by the manufacturer of the product being used.

Exterior Gloss Enamel shall be as specified on the plans.

Epoxy coating shall be in accordance with the Item, "Epoxy".

Epoxy may be purchased either from the Department or on the open market. Epoxy Coating purchased on the open market shall not be used until inspected and approved by the Engineer.

Epoxy purchased from the Department shall be charged to the Contractor at the price shown on the plans. Reimbursement to the Department will be accomplished by making deductions from the Contractor's partial payments for the actual cost of the epoxy purchased. The Contractor may place his order for epoxy with the Engineer. Shipments will be made direct to the Contractor at the location designated by the Contractor with the transportation charges to be paid by the Consignee. Epoxy not used, in unopened containers, which was purchased from the Department may be returned to the District Warehouse upon completion of the contract, for credit of the purchase price.

The Contractor shall furnish all tinting colorants required for epoxy coatings. Tinting colorants shall be universal type as specified on the plans.

580.3. **Construction Methods.** Each Arbor Unit shall be constructed at the location designated on the plans. Locations of Arbor Units may be varied upon written directions from the Engineer, when site conditions warrant such variations. Prior to construction, the Engineer will stake the location of each Arbor Unit. The elevation of the floor slab of each Arbor Unit shall be as indicated on the plans unless otherwise directed by the Engineer.

The area to be occupied by each Arbor Unit shall be excavated to a minimum of 6 inches below the bottom of the concrete floor slab, unless otherwise stated on the plans. Backfill material shall be caliche, sandy loam, gravel, sand or other material approved by the Engineer. Backfill shall be placed in accordance with the Item, "Structural Excavation". All concrete work shall be done in accordance with the Item, "Concrete Structures". Excavation and form work for this construction shall be in accordance with the Item, "Excavation and Form Work".

When directed by the Engineer, the Contractor shall furnish mill test reports or other certification that structural steel meets the requirements of these specifications.

Welding shall be performed only by welders approved by the Engineer. All welding shall conform to the requirements of the SDHPT Bulletin C-5.

Metal anchor plates or anchors as indicated on plans shall be embedded in the concrete slab. The arbor supports shall be appropriately and permanently attached to these plates or anchors.

Masonry work shall include the furnishing of materials, labor, and equipment required for the laying of all applicable masonry units and all masonry work as shown on plans, or called for in the specification.

The Contractor shall install all grates, frames, louvers, grills, bolts, anchors, electrical ducts and boxes, flashing, and any other special equipment or architectural features, where these items are to be constructed in masonry walls or in other parts of the structure as detailed on the plans.

Mortar for masonry work, unless otherwise specified, shall conform to requirements of ASTM Designation: C 270, Type N, composed of 1 volume of Portland cement to which is added 1 volume of hydrated lime and 6 volumes of mortar sand; or 1 volume of masonry cement and 3 volumes of mortar sand. Masonry cement shall conform to requirements of the Item, "Hydraulic Cement". Hydrated lime shall conform to ASTM Designation: C 207, Type S. Materials of the same manufacturer shall be used for the entire project.

Mortar sand shall conform to requirements of ASTM Designation: C 144 and C 270 for mortar strength. Sand shall have the following sieve analysis:

	Percent Passing	
Sieve Size	**Natural**	**Manufactured**
No. 4	100	100
No. 8	95 to 100	95 to 100
No. 16	60 to 100	60 to 100
No. 30	35 to 80	35 to 70
No. 50	15 to 85	20 to 40
No. 100	2 to 15	10 to 25
No. 200	None	0 to 10

Additives to the mortar shall be as specified on the plans.

All water for mortar mix shall be potable water. Water content in mortar mix shall be the amount required to obtain a workable plastic mortar. Mixture shall be mixed for a minimum period of 3 minutes in a drum-type batch mixer. Mortar shall be used within one hour after mixing. Mortar not used within one hour shall be discarded; retempering will not be permitted. Mortar boxes shall be cleaned at the end of each day's work.

Upon completion of each day's work, all masonry shall be thoroughly cleaned with stiff brushes and clean water, and rinsed thoroughly after washing. Any other method of cleaning masonry must meet the approval of the Engineer.

Roofing work shall include the furnishing of all materials, labor, and equipment necessary to construct and install the Arbor Unit roof, as shown on the plans, in conformance with the following applicable procedure.

(a) **Corrugated Asbestos Roofing.** Corrugated asbestos roofing shall be erected by the straight joint method, whereby side laps and head laps form straight lines, unless otherwise shown on plans. Roofing sheets shall be furnished with cut corners as required for this type of erection. Fasteners shall be installed 12 inches on centers as eave bearings and 18 inches on centers at head laps and intermediate bearings.

All holes for fasteners shall be drilled through the crest of corrugations.

When specified on the plans to be painted, one or both surfaces, as specified, of the asbestos roofing shall receive one prime coat and two coats of enamel.

(b) **Metal Roofing.** Metal roofing shall be erected as specified on plans, or as recommended by the manufacturer.

Metal roofing shall be painted when so specified on the plans. When roofing is specified to be painted, roofing shall receive one prime coat and two coats of enamel and shall meet the approval of the Engineer.

(c) **Wood Shingle Roofing.** Roofing felt shall be applied over roof sheathing with galvanized roofing nails through tin washers, spaced 12 inches on center, both directions. Felts shall be lapped 18 inches. After dry sheeting entire roof, one additional layer of felt shall be mopped with roofing asphalt.

Shingles shall be laid 8 inches to weather, in parallel courses over prepared deck. Starter course shall be doubled, with bottom course of sawed shingles as detailed on plans. All joints shall be broken with at least 2 inches side lap. All shingles shall be laid not less than 1/8 inch apart.

Hot-dipped zinc coated shingle nails with large head and corrugated shank of adequate length for the thickness of the shingles shall be used. Each 4 inch in width or fraction thereof shall contain a nail. No shingle shall contain less than 2 nails.

Concrete floor, all caps on masonry, and all concrete surfaces to be coated with epoxy shall be steel troweled and shall be given a fine broom finish.

Concrete shall cure for 2 days before forms are removed. Concrete shall cure for 7 days minimum before epoxy coating is applied, unless otherwise specified on the plans.

All surfaces to receive epoxy coating shall be cleaned with toluene and allowed to dry a minimum of 10 minutes before applying epoxy.

Two coats of epoxy shall be applied to surfaces designated. The first coat of epoxy shall cure for a minimum of 12 hours after application. Before applying second coat, the first coat shall be washed with toluene and allowed to dry for 10 minutes.

All steel surfaces shall be painted, unless otherwise specified on the plans. Steel shall be cleaned in conformance with Steel Structures Painting Council current specification SSPC-SP2-63T, hand tool cleaning. Steel shall be prime coated and shall be painted with two coats of enamel, after the Engineer approves the cleaned steel.

Color scheme shall be as selected by the Engineer.

When specified on the plans, Litter Barrel Stands will be furnished by the Department to the Contractor, free of charge at the site. The Contractor shall erect each Litter Barrel Stand as directed by the Engineer. The Contractor shall coat each Litter Barrel Stand with 2 coats of zinc grey paint of a good commercial grade.

580.4. **Measurement.** "Arbor Unit" will be measured as each unit, complete in place.

580.5. **Payment.** The work performed and material furnished as prescribed by this item, measured as provided above, shall be paid for at the unit price bid for "Arbor Unit", of the types specified on the plans. Said price shall be full compensation for furnishing, preparing, hauling and erecting all materials; for transportation, freight, excavation and backfilling; and for all labor, tools, equipment and incidentals necessary to complete the work.

ITEM 582

WATER MAINS AND DRAINS

582.1. **Description.** This item shall govern for all materials and work necessary for the installation of all exterior water mains, all sanitary sewer lines, drain lines, and any and all distribution lines connected to the various structures as shown on the plans.

582.2. **Materials.** Each piping system shall be installed using the materials designated on the plans and in details for each particular system. The materials so designated shall be furnished in accordance with the following applicable specification.

Unless otherwise specified on the plans, 1/2 inch PVC pipe shall be Class 315, 3/4 inch or larger PVC pipe shall be Class 200. All thermoplastic PVC pipe shall fulfill the requirements of ASTM Designation: D 2241, Class 315 with SDR-13.5 or Class 200 with SDR-21.

Where specified on plans, Schedule 40 PVC pipe shall be PVC 1120 and shall fulfill the requirements of ASTM Designation: D 1785, Schedule 40 PVC pipe.

For sizes 1½ inch and larger with continuous piping lengths in excess of 100 feet, ring and bell joint piping shall be used. Dimension ratio shall conform to ASTM Designation: D 2241. Piping shall be extruded from 12454-B PVC resin. Rubber gaskets shall conform to ASTM Designation: D 1869. Piping shall conform to ASTM Designation: D 1784.

All PVC pipe and fittings that transport potable water must bear the seal (or "NSF" mark) of the National Sanitation Foundation, or other accredited laboratory, indicating approval for use in transporting potable water.

PVC Welding Solvent and Solvent Thinner shall fulfill the requirements of ASTM Designation: D 2564.

Galvanized Steel pipe shall fulfill the requirements of ASTM Designation: A 120, Schedule 40, standard galvanized steel pipe with galvanized malleable iron screwthread fittings.

Cast iron pipe shall be service weight cast iron soilpipe and shall fulfill the requirements of ASTM Designation: A 74 and ASA Specification A 40-1, with bell spigot joints. Joints shall be made with neoprene compression gaskets conforming to ASTM Designation: C 564. The above shall apply to all CI pipe unless otherwise specifically noted on plans.

Vitrified clay pipe shall fulfill the requirements of ASTM Designation: C 13. Where specifically called for on plans, Extra Strength VCP shall fulfill the requirements of ASTM Designations: C 200 and C 425.

Valves shall be bronze and shall bear the manufacturer's name, conspicuous brand, or trademark. Each valve shall be rated for a minimum of 125 psi, stream working pressure, and must bear a clear indication of the working pressure for which it is designed. Valves shall be of the type and size as specified on the plans.

Quick Coupling Valves and Couplers shall be as specified on plans.

Valve Boxes and Covers shall be the type and size as required by local plumbing ordinance. If no plumbing ordinance is in effect, Valve Boxes and Covers shall be as specified on the plans.

Sprinkler Heads shall be of the type and size specified on the plans. Sprinkler Heads shall be installed at locations shown, and in accordance with details shown on the plans.

Sprinkler-Control System shall be in accordance with the materials specified, and in accordance with the details shown on the plans.

582.3. **Construction Methods.** Care shall be exercised in handling, loading, unloading and storing pipe and fittings. All material, to which this specification applies, must be stored under cover until used. All pipe must be transported in a vehicle with a bed long enough to allow pipe lengths to lie flat. Pipe shall not be subjected to undue bending or concentrated load at any point. Any section of pipe that has been dented or damaged shall be discarded until the damaged section of pipe is cut out. The undamaged sections of pipe shall be rejointed with a coupling. Pipe fittings shall be protected from the weather during construction prior to the time that they are welded or joined to the pipe.

All pipe shall be placed in a trench with a minimum of 18 inch cover, except as otherwise specifically noted on the plans. All pipe shall have a firm, uniform bearing for the entire length of each pipeline. The Contractor shall take precautionary measures to prevent uneven settlement of each pipeline.

Wedging or blocking of pipe will not be permitted. All rock, lumber, and rubbish shall be removed from the trenches. If trench or surrounding soil is extremely rocky, the pipe shall be bedded in sand or other approved material.

Pipe shall not be laid when there is water in the trench, or when the atmospheric temperature is 32 F or below.

All foreign matter shall be removed from the inside of the pipe before welding or coupling. Pipe shall be kept clean during installation.

All solvent-welded joints in PVC piping shall be made in strict accordance with the written recommendation of the pipe manufacturer.

Solvent-welding of PVC pipe and fittings will not be allowed when atmospheric temperature is 40 F or lower, or when atmospheric temperature is 90 F or higher. Manufacturer's recommendations for ring gasketed joints shall govern the installation requirements for continuous run piping lengths in excess of 100 linear feet, with sizes of 1½ inch and larger.

After twice applying welding-solvent to the thoroughly etched surfaces of PVC pipe and fitting, the pipe or fitting shall be rotated one quarter turn to insure complete and even distribution of the welding-solvent. The joint shall be held together for a minimum of 15 seconds to insure that the joint is fully welded.

Where metal connections are made to PVC pipe, a non-hardening pipe dope recommended by the pipe manufacturer shall be used in making the metal-to-PVC connections. All metal-to-metal joints shall be made prior to metal-to-PVC joints.

All pipelines crossing under roadways shall be encased in the type and size of encasement pipe indicated on plans. Casings shall extend a minimum of 3 feet beyond each curb or edge of shoulder.

All water, sewer and drain lines shall be installed in accordance with Rule .005 Water Distribution, paragraph C, Location of Mains, as published by the Texas Department of Health, Water Hygiene Division.

All backfill material shall be free of rocks, debris, and earth clods. All areas where existing topsoil is disturbed by construction operations, including damage from vehicles and equipment, shall be repaired to the satisfaction of the Engineer using existing topsoil on the site. All topsoil shall be fine granular, friable material suitable for re-establishment of turf. Topsoil and the placement thereof, when used to repair areas disturbed by construction under this item, shall be subsidiary to this item and will not be paid for directly.

582.4. **Testing.** Each water system shall be tested for leaks before backfilling trenches; however, sufficient backfill material may be placed in trenches between fittings to insure stability of the lines under pressure. In all cases, fittings and couplings must be open to visual inspection for the full period of the test. No testing shall be done until the last solvent-welded PVC joint has been allowed to set and cure for 12 hours. All valves at drinking fountains shall be closed and all risers to hydrants and quick-coupling valves shall be properly capped before testing. All pipe, fittings and valves shall be subjected to 150 psig hydrostatic pressure for 24 hours and proved tight.

Air pressurizing method will not be allowed. If leaks occur, the joint(s) or fitting(s) shall be replaced and the test repeated until the systems prove to be tight. After backfill is placed each system shall be cleaned by flushing all pipelines.

582.5. **Disinfection.** After testing and backfill have been completed, the potable water system, upon final completion, shall be disinfected. The solution for disinfecting shall contain not less than 50 parts per million of available chlorine.

The chlorinating solution shall be household bleach, labeled to indicate 5.25 percent available chlorine. This solution shall be introduced into the potable water lines at a minimum rate of 1-1/2 pints per 100 gallons of water pumped through the system. The method of introducing the disinfectant solution and the time at which this operation is to begin shall be as approved by the Engineer.

The disinfectant solution shall remain in the system for a period of 24 hours, during which time, all valves, faucets, and fountains on the potable water system shall be opened and closed several (not less than 6) times. After the 24 hour period, the lines shall be flushed with water from the permanent water source until there is no detectable odor or taste of chlorine from any outlet.

The disinfection procedure shall be repeated whenever repairs are made to the potable water system.

582.6. **Measurement.** The various bid items of this specification will be measured as follows:

A. Water main, of each type and size specified, will be measured by the linear foot, complete in place. Thrust blocks, fittings, couplings, and valves and valve boxes shall be subsidiary to the respective types and sizes of pipe.

B. Drain line, of each type and size specified, will be measured by the linear foot, complete and in place. Fittings, couplings, clean-outs, and any drain headwalls shall be subsidiary to the attached type and size of pipe.

C. Quick-coupling valves will be measured as each quick-coupling valve, complete and in place. Risers, coupler keys, impact sprinklers, hose swivel-ell, hose bibbs, swing joints, and concrete protectors shall be subsidiary thereto.

D. Sprinkler heads of the type and size specified will be measured as each sprinkler head, complete and in place. Swing-joints, drain sumps if specified, risers and concrete protectors shall be subsidiary thereto.

E. Sprinkler-Control System will be measured as each sprinkler-control system, complete and in place.

F. Casing of the type and size specified will be measured by the linear foot, complete and in place.

582.7. **Payment.** The work performed and materials furnished as prescribed by this item, and measured as provided under "Measurement" will be paid for as follows:

Water main will be paid for at the unit price bid per linear foot, for the particular type and size of water main specified on the plans. No separate payment will be made for thrust blocks, fittings, couplings, valves, or valve boxes.

Drain line will be paid for at the unit price bid per linear foot for the particular type and size of drain line specified on the plans. No separate payment will be made for fittings, couplings, clean-outs, or drain headwalls.

Payment for the Quick-Coupling Valves will be made at the unit price bid for each Quick-Coupling Valve of the size specified. No separate payment will be made for risers, coupler keys, impact sprinklers, hose swivel-ells, faucets, hose bibbs, swing joints, or concrete protectors.

Payment for the Sprinkler Heads will be made at the unit price bid for each Sprinkler Head of the type and size specified. No separate payment will be made for swing-joints, drain sumps, risers, or concrete protectors.

Sprinkler-Control system will be paid for at the unit price bid per Sprinkler-Control system.

Casing will be paid for at the unit price bid per linear foot, for the type and size specified on the plans.

Payment, as provided for above, shall be full compensation for all work, testing, disinfection, furnishing and installing all materials, accessories, and incidentals necessary to complete the work prescribed in this specification as shown on the plans. Said payment shall also be full compensation for all excavation and backfilling, all freight, loading, unloading, and handling of materials, tools and equipment necessary to complete the work.

ITEM 584

SEPTIC SYSTEM

584.1. Description. This item shall govern for the furnishing and installation of all material, equipment, labor and incidentals necessary to complete the septic system as shown on the plans and stipulated in the specifications including installation of septic tank and drain field pipe and all materials.

584.2. Material and Construction Methods. Material and equipment used in the "Septic System" shall meet the following requirements:

Dimensions, reinforcing and appurtenances for the various structures required for the septic tank and drainage system shall be as shown on the plans. Concrete for all structures shall be Class A as specified by the Item, "Concrete for Structures". Reinforcing shall be as specified by the Item, "Reinforcing Steel". Construction of all structures shall conform to the Item, "Concrete Structures".

All excavation, grading, forming, backfilling and resodding involved in this item shall be as specified by the Item, "Excavation and Form Work".

Inlet and outlet elevations for all underground concrete structures shall be as indicated on the plans and shall be approved by the Engineer before concrete placements are made. Slope for sewer line to septic tank must be uniform. Slope for effluent and waste lines must be uniform. Perforated drain field piping shall be installed level or as indicated on the plans.

Fittings for all underground concrete structures shall be service weight cast iron, in accordance with ASTM Designation: A 74.

Effluent lines downstream from septic tanks shall be of the material designated on the plans and shall conform to the Item, "Water Mains and Drains".

Perforated piping for drain fields shall be 4 inch diameter plastic pipe and fittings conforming to Commercial Standards Specification CS 228. Perforated drain pipe shall have a minimum two rows of 1/2 inch holes, not more than 90 degrees apart on three inch to six inch centers. All material shall be certified to withstand a 1000 lb. crush load.

Drain field absorption trenches shall be laid out and excavated in accordance with details on the plans. Where bottoms of trenches have become compacted from digging operations, the bottom areas shall be scarified with a coarse rake before placing the first level of gravel fill.

Backfill used for absorption trenches shall be clean washed gravel or crushed stone screened to provide particle sizes of from 1/2 inch to 2-1/2 inch. Coarse aggregate for concrete, screened to the above gradation, may be used when approved by the Engineer.

Gravel shall be provided below, around and above the perforated drain line to the dimensions shown on plan details. The top surface of gravel fill shall be separated from the soil backfill by a layer of biodegradable paper or a two inch thick layer of straw.

The top of the trenches shall be backfilled with topsoil and shall be hand-tamped in 6 inch layers. The top shall be overfilled with 4 to 6 inches of earth to prevent surface water from collecting in the absorption trenches.

584.3. **Measurement.** "Septic System" shall be measured as each complete unit in place as shown on the plans, including septic tank and all material necessary for the drain field installation.

584.4. **Payment.** The work performed and materials furnished as prescribed by this item, measured as provided under measurement, shall be paid for at the unit price bid for "Septic System", which price shall be full compensation for furnishing, preparing, hauling, handling and installing all material; for all excavation and backfilling; and for all labor, tools, equipment and incidentals necessary to complete the "Septic System" ready for use.

ITEM 588

RECREATIONAL VEHICLE SANITARY UNIT

588.1. **Description.** This item shall govern for the furnishing and installation of all material, equipment, labor and incidentals necessary to complete a Recreational Vehicle Sanitary Unit as shown on the plans and provided for in the specifications for this project.

588.2. **Materials.**

(1) Concrete shall be Class "A" as specified by the Item, "Concrete for Structures". Formwork, concrete placement, curing, etc. shall be as specified by the Item, "Concrete Structures".

(2) Reinforcing Steel shall be as specified by the Item, "Reinforcing Steel".

(3) Pipe and fittings for water and sewer lines shall be of the sizes, types and dimensions as shown on the plans and shall conform to the requirements specified by the Item, "Water Mains and Drains".

(4) Incidental materials and equipment shall be as specified on the plans.

588.3. **Construction Methods.** The unit shall be constructed to the lines and grade at the location shown on the plans. The location of the unit may be moved or shifted when directed by the Engineer in writing.

588.4. **Measurement.** Recreational Vehicle Sanitary Unit shall be measured as each unit complete in place as shown on the plans.

588.5. **Payment.** The work performed and materials furnished, as prescribed by this item, measured as provided under measurement, shall be paid for at the unit price bid for "Recreational Vehicle Sanitary Unit". This payment shall be full compensation for furnishing, preparing, hauling, handling and installing all material and equipment; for all excavation and backfilling; and for all labor, tools, equipment and incidentals necessary to complete the "Recreational Vehicle Sanitary Unit" to the satisfaction of the Engineer, and ready for use.

Any Illumination Assembly to be erected, when shown on the plans, in the Sanitary Unit shall be measured and paid for in accordance with the Items "Rest Area Illumination Assemblies", "Roadway Illumination Assembly Foundations", "Duct Cable" and other pertinent items.

Valves, water supply line and sewage line outside the limits shown on the plans will be measured and paid for in accordance with the Item, "Water Mains and Drains".

ITEM 590

CHAIN LINK SECURITY FENCE

590.1. Description. This item shall govern for furnishing the quantities of chain link fencing and gates as shown on the plans, including all posts, bracing and accessories as called for herein and the installation of all items, complete in every respect, at the location shown on the plans.

590.2. Materials.

(1) Wire fabric for fencing shall be 9 gauge steel with a minimum tensile strength of 80,000 psi. Mesh size shall be 2 inch ± 1/16 inch between parallel wires. Top edge of fabric shall be twisted and barbed on 6 foot height fencing and shall be knuckled selvage on 4 foot fencing. Bottom edge of all fencing shall be twisted and barbed.

(2) Fabric ties of same material as fabric shall be furnished in sufficient quantity to fasten fabric to top tension wire or to top rail at 18 inch intervals. Ties shall be furnished to fasten the fabric to bottom tension wire at 18 inch intervals. The fabric shall be tied to line posts at 15 inch intervals.

(3) Line posts shall be furnished in sufficient quantity to provide a maximum spacing between posts of 10 feet.

Fabric Height	Pipe Section		H-Beam Section		Imbedment
	Size	Wt./ft.	Size	Wt./ft.	Length
4 ft.	1.90″ O.D.	2.72#	1.875″x1.625″	2.70#	24″
6 ft.	2.375″ O.D.	3.65#	2.25″x1.95″	4.10#	24″

(4) Corner posts, pull posts and end posts:

Fabric Height	Pipe Section		Imbedment Length
	Size	Wt./ft.	
4 ft.	2.375″ O.D.	3.65#	30″
6 ft.	2.875″ O.D.	5.79#	36″

(5) Gate Posts.

Gate Leaf	Pipe Section		Imbedment Length
	Size	Wt./ft.	
to 6 ft.	2.875″ O.D.	5.79#	36″
6 to 13 ft.	4.0″ O.D.	9.10#	36″
13 to 18 ft.	6.625″ O.D.	18.97#	42″

(6) Post caps for pipe sections shall be designed to exclude all moisture. Where barbed wire is specified, extension arms shall be integral with post caps. Where top rail is specified, post caps shall have an opening for top rail. All post caps shall have a 2 inch skirt for rigidity.

(7) Top rail, where called for, shall be 1.625 inch O.D. steel pipe weighing 2.27#/foot. Top rail shall be furnished in random lengths not less than 18 feet per section and shall be joined with outside sleeve, steel couplings not less than 6 inches long and having a wall thickness of not less than 0.70 inch. Couplings shall be designed to allow for expansion movement of the top rail.

(8) Tension wire for top finish, where no top rail is specified, shall be 7 gauge high carbon steel wire. Tension wire shall be furnished for bottom edge of all fence fabric.

(9) Trussed bracing shall be furnished for each panel adjacent to a terminal, pull, corner or gate post. Compression member shall be 1.625 inch O.D. pipe as specified for top rail material. Tension members shall be 3/8 inch diameter steel rods with turnbuckles.

For 6-foot fences with top tension wire, braced panels shall consist of horizontal pipe brace, located approximately 4 inches below top of fabric, a diagonal pipe brace, attached at the midpoint of the terminal post and at the bottom of the adjacent line post, and a truss rod, attached to the top of the adjacent line post, extending diagonally to the bottom of the terminal post.

For 6-foot fences with top rail, braced panels shall consist of a horizontal pipe brace, midway between top and bottom of fence fabric, with a truss rod extending from midpoint of the line post diagonally to bottom of terminal post.

Four-foot fences with top rail shall be braced with a truss rod connected to the bottom of the terminal post and extending to top of adjacent line posts.

Four-foot fences without top rail shall have a horizontal brace pipe at the top of the fabric and a diagonal truss rod installed as described above.

(10) Gates shall be fabricated from 1.90 inch O.D. pipe weighing 2.72#/foot. Fabric on gates shall be the same as that specified for fencing. The following accessories shall be furnished for each gate:

Corner and tee fittings of malleable iron or pressed steel having means for attaching diagonal bracing members.

Hinges of malleable iron providing for full 180 degree swing with bottom hinges to be ball and socket type.

Diagonal braces consisting of 3/8 inch diameter truss rods with turnbuckles, two to each gate frame. Vehicle gates shall have vertical 1.90 inch O.D. pipe brace at center of each gate leaf.

Latches for single gates shall have a single fork latch with padlock eye; double leaf gates shall have two fork latches mounted on center plunger rod with padlock eye.

Hold backs shall be provided for each leaf of vehicular gates, employing a semi-automatic hold back catch to be anchored at least 12 inches into a 12 inch diameter by 24 inch deep concrete footing.

A malleable iron center rest, designed to receive the plunger rod, to be anchored at least 12 inches into a 12 inch diameter by 24 inch deep concrete footing, shall be provided for all double leaf gates.

The top of all gate frames shall align with the fencing top rail. Vehicular gates shall be 4 inches greater in overall height than the adjacent fencing so as to extend to within 2 inches of pavement between 6 inch curbs, if curbs are designated on the plans.

(11) Barbed wire, where specified, shall be 12-1/2 gauge with barbs spaced approximately 5 inches apart. Three strands of barbed wire will be required where barbed wire top is specified.

Barbed wire support arms shall be at an angle of 45 degrees from vertical and shall have clips for attaching 3 strands of barbed wire. Each support arm shall be of sufficient strength to support a 200 lb. weight applied at the outer strand of barbed wire.

(12) Stretcher bars shall be not less than 3/16 inch by 3/4 inch flat steel and not more than 2 inches shorter than the fabric height. One stretcher bar shall be provided for each gate and end post. Two stretcher bars shall be provided for each corner and pull post. Stretcher bars shall be attached to terminal posts with 1 inch x 1/8 inch flat steel bands with 3/8 inch carriage bolts at intervals not exceeding 15 inches.

(13) Miscellaneous fittings and fasteners shall be furnished in sufficient quantities to erect all fencing materials in a proper manner.

(14) All fencing materials shall be approved by the Engineer to be in accordance with the specification before they are erected. When requested by the Engineer, samples of any fencing component shall be furnished by the Contractor for testing.

If base metals or fabricated items originate in foreign countries, the Contractor shall provide written notification to the Engineer of the origin of this material.

590.3. Galvanizing and Aluminum Coating. All material used in "Chain Link Security Fence" shall be hot dip zinc coated as specified by the following, except that the fabric may be aluminum coated:

All posts and pipe: ASTM Designation: A 120 (1.8 oz/sf).

All H-beam sections: ASTM Designation: A 123 (2.0 oz/sf).

Fence fabric: ASTM Designation: A 392, Class 1 (1.2 oz/sf) or ASTM Designation: A 491 (0.40 oz/sf).

Tension wire, barbed wire: ASTM Designation: A 121, Class III (0.80 oz/sf).

Post caps, stretcher bars, miscellaneous fittings: ASTM Designation: A 153.

Weight of zinc coating for all items shall be determined in accordance with ASTM Test Designation: A 90 except for core wire which shall have a galvanized coating weighing not less than 0.35 ounces of zinc per square foot.

590.4. Construction Methods.

(1) Clearing and Grading. The Contractor shall perform all clearing of brush, rocks and debris which may be necessary for the installation of this fencing.

The Engineer will stake out the locations for corner posts and terminal posts in this installation. The fencing panels between corner and terminal posts shall generally follow the finished ground elevations. However, the Contractor shall grade off minor irregularities in the path of the fencing as necessary to limit the variation of grade under the bottom edge of fence fabric to a distance of not more than six inches and not less than two inches to the ground.

(2) Post Spacing. Maximum spacing for line posts shall be 10 feet-0 inches. Pull posts shall be located not more than 500 feet apart and at each change in direction exceeding 20 degrees, both horizontally and vertically. Runs of fencing over 500 feet but less than 1000 feet shall have a pull post in the center of the run.

(3) Postholes. Holes for concrete footings for all posts shall be drilled to the dimensions listed in the following tables:

Holes for Line and End Posts

Type Post	Fabric Height	Min. Hole Diameter	Min. Hole Depth	Post Embedment
Line	4′	9″	30″	24″
Line	6′	9″	30″	24″
End	4′	12″	36″	30″
End	6′	12″	42″	36″

Holes for Gate Posts

Gate Post Size	Min. Hole Diameter	Min. Hole Depth	Post Embedment
2.875″ O.D. x 5.79#	12″	42″	36″
4″ O.D. x 9.10#	18″	42″	36″
6.625″ O.D. x 18.97#	18″	48″	42″

Where solid rock is encountered without an overburden of soil, line posts shall be set a minimum depth of 12 inches, and end, corner, gate and pull posts a minimum of 18 inches into the solid rock. The hole shall have a minimum diameter one inch greater than the largest dimension of the post section to be set.

After the post is set and plumbed, the hole shall be filled with grout consisting of one part Portland cement and three parts clean, well graded sand. Other grouting materials may be used if approved or specified by the Engineer. The grout shall be thoroughly worked into the hole so as to leave no voids. The grout shall be crowned to carry water from the post.

Where solid rock is covered by an overburden of soil or loose rock, the posts shall be set to the full depth shown in Table above unless the penetration into solid rock reaches the minimum depths specified above, in which case, the depth of penetration may be terminated. Concrete footings shall be constructed from the solid rock to the top of the ground. Grouting will be required on the portion of the post in solid rock.

Excavated material from footings shall be spread neatly and uniformly to leave the area adjacent to the fence as sightly as possible.

(4) Concrete for Footings. Concrete for footings shall be Class "B" concrete in accordance with the Item, "Concrete for Structures", unless otherwise specified on plans.

All concrete footings shall be cast up to finish grade and crowned 1 inch to shed water. Excess concrete not used in the footings, and any other construction debris, shall be removed from the site.

(5) Fabric Erection. The fence fabric shall be erected by securing one end and applying sufficient tension to the other end to remove all slack before making attachments. The fabric shall be cut and each span shall be attached independently at all corner posts and pull posts.

Fastening to end, pull, corner and gate posts shall be with stretcher bars which shall be secured to the posts with stretcher bar bands at intervals not exceeding 15 inches.

Fence fabric shall generally follow the finished contour of the site with the bottom edge of fabric located 2 inches above the grade. In uneven areas the ground shall be graded so that the maximum distance between bottom of fabric and ground is limited to 6 inches.

(6) **Electrical Grounds.** Grounding rods shall be at least 5/8 inch diameter by 8 feet long "copperweld" rods driven or drilled into the soil so that the top of the rod is approximately 6 inches below grade. A No. 6 solid copper conductor shall be clamped to the ground rod and the bottom tension wire of the fence with cast bronze clamps with bronze or stainless steel bolts and washers.

Each 1000 foot of fence shall be provided with a ground located near the center of the run. At least one electrical ground shall be installed for each fenced enclosure.

A ground shall be provided directly under the point where a power line passes over the fence.

590.5. Measurement. "Chain Link Security Fence", of the height specified, will be measured by the linear foot of fence measured at the bottom of the fabric along the centerline of fence from center to center of end posts, excluding gates. Gates will be measured as each gate, complete in place.

590.6. Payment. The work performed and material furnished as prescribed by this item, measured as provided under "Measurement" will be paid for at the unit price bid for "Chain Link Security Fence" of the height specified, which price shall be full compensation for furnishing and installing all fencing materials, except gates, including all miscellaneous fittings, braces, post caps, line wires, connection clips or wires; digging post holes and grouting in rock where required; furnishing and placing concrete for setting posts; furnishing and installing all electrical grounds; all hauling; and for all manipulations, labor, tools, equipment and incidentals necessary to complete the work, including excavation, backfilling and disposal of surplus material.

Gates measured as provided under "Measurement" will be paid for at the unit price bid for "Pedestrian Gate" or "Vehicular Gate", of the type, height and opening specified, which price shall be full compensation for fur-

nishing all materials; fabricating, preparation, hauling, and erecting all miscellaneous fittings, braces, latches, gate hinges, stops and center anchorages; and for all manipulations, labor, tools, equipment and incidentals necessary for a complete installation.

ITEM 610

ROADWAY ILLUMINATION ASSEMBLIES

610.1. **Description.** This item shall govern for the materials and equipment used and for the installation of the various types of roadway illumination assemblies as shown on the plans.

The term "Assembly" as used herein shall constitute the complete assemblage of parts, equipment and miscellaneous items, except foundations, erected as provided in the plans and in accordance with these specifications, forming a complete and independent lighting unit.

610.2. **Materials.** All materials furnished, assembled, fabricated or installed under this item shall be new, unless otherwise indicated, and in strict accordance with the details shown on the plans.

The Contractor shall furnish six sets of shop drawings of the complete assembly in accordance with the Item, "Steel Structures", except that the drawings will be submitted to the Department at the project address, along with certification that all materials used in the fabrication are in accordance with the plans and specifications. No work shall be performed in the shop prior to approval of the above drawings by the Engineer. Any purchase of material prior to fabrication authorization shall be at the Contractor's risk.

610.3. **Construction Methods.** Roadway Illumination Assemblies shall be fabricated and placed in accordance with the details and dimensions shown on the plans or as directed by the Engineer.

The careful erection and aligning of the poles furnished under this item shall be considered an essential feature of the installation of the assembly and shall be as near to true alignment as practicable.

All circuits shall test clear of faults, grounds and open circuits.

After satisfactory completion of the above tests and insulation resistance tests required under the Items, "Electrical Conductor" and "Duct Cable", the illumination system shall be placed in operation. Final acceptance of the system will not be made until the system has operated satisfactorily for a period of 14 days (this includes energizing and de-energizing the lighting circuits at dusk and dawn). Pole knockdowns, except those caused by Contractor's equipment, and minor failures of lamps and ballasts will not be cause for modifying or restarting the 14-day test period. Final acceptance inspection of the system will be made at the end of a satisfactory 14-day test period. Final acceptance of the system will not relieve the contractor of the responsibility for replacement of knockdown poles and failed lamps and ballasts which occur prior to the end of the 14-day test period.

The Contractor will be relieved of the responsibility for maintenance of the system following the successful 14-day test period.

The Contractor will not be required to pay for electrical energy consumed by the system during the period of trial operation.

610.4. **Measurement.** Roadway Illumination Assemblies will be measured as each of the several types of assemblies, complete in place.

610.5. **Payment.** Work performed and material furnished as prescribed by this item and measured as provided under "Measurement" will be paid for at the unit price bid for "Roadway Illumination Assemblies" of the types specified, which price shall be full compensation for furnishing, installing and testing all luminaries, ballasts, poles, lamps, conductors and internal connections of equipment and for all manipulations, labor, tools, equipment and incidentals necessary to complete the work.

ITEM 612

RELOCATING ROADWAY ILLUMINATION ASSEMBLIES

612.1. **Description.** This item shall govern for the materials and equipment to be furnished and for the methods to be followed in relocating roadway illumination assemblies.

612.2. **Materials.** All materials furnished by the Contractor under this item shall be in strict accordance with the details shown on the plans.

612.3. **Construction Methods.** Safe construction and operating practices in accordance with recommendations of the National Electrical Safety Code shall be maintained.

The illumination assemblies shall be removed from the foundations in such a manner so as to prevent scarring or marring of standards in any way. The Contractor shall construct a new foundation at the proposed location of the illumination assembly, and the existing foundation will be cut off a minimum of one foot below subgrade or otherwise removed as directed by the Engineer. The new foundation shall be constructed as shown on the plans.

Where salvage of all or part of the existing underground conduit, duct cable and/or conductor is required, the Contractor shall make every effort to prevent damage to either conduit, duct cable and/or conductor. Should damage occur to conduit, duct cable and/or conductor, and in the opinion of the Engineer adequate precautions had not been exercised by the Contractor during the salvage operation, the Contractor shall at his expense furnish new conduit, duct cable and/or conductor to replace the sections so

damaged. All splices, where permitted, shall be made with approved manufactured splicing kits. In the case of direct-burial conductors, the location of the splice shall be noted on the final plans and marked in the field with a permanent marker. Splices in duct cable conductors will only be made in ground boxes.

The careful erection and aligning of the poles under this item shall be considered an essential feature of the installation of the assembly and shall be as near to true alignment as practicable.

The Contractor shall provide new No. 12 Type THW or Type TW conductors that are internal to the roadway illumination assembly and furnish and install new fused connectors for installation at the relocated site as indicated in the plans. The Contractor shall also furnish and install new lamps in relocated assemblies. This work will be considered subsidiary to this item.

All circuits shall test clear of faults, grounds and open circuits.

After satisfactory completion of the above tests, the illumination system shall be placed in operation. Final acceptance of the system will not be made until the entire system has operated satisfactorily for a period of not less than 14 days (this includes energizing and de-energizing the lighting circuits at dusk and dawn). The Contractor will not be held responsible for failures outside the scope of his work. Pole knockdowns, except those caused by Contractor's equipment, and minor failures of lamps and ballasts will not be cause for modifying or restarting the 14-day test period.

The Contractor will be relieved of the responsibility for maintenance of the system following the successful 14-day test period.

The Contractor will not be required to pay for electrical energy consumed by the system during the period of trial operation.

612.4. Measurement. Relocating Roadway Illumination Assemblies will be measured as each assembly removed and reinstalled in a new location.

New foundations will be measured under the Item, "Roadway Illumination Assembly Foundations".

New conduit, except as noted under "Construction Methods" for conduit damaged due to negligence, will be measured under the Item, "Conduit".

New duct cable will be measured under the Item, "Duct Cable", except as noted under "Construction Methods" for duct cable damaged due to negligence.

New conductor will be measured under the Item, "Electrical Conductor", except as noted under "Construction Methods".

No measurement will be made for salvaging or relocating existing conduit, duct cable and/or conductor.

612.5. Payment. The work performed as prescribed by this item, measured as provided under "Measurement", will be paid for at the unit price bid for "Relocating Roadway Illumination Assemblies", which price shall be full compensation for salvaging and relocating the existing conduit, duct cable and/or conductor; removing existing foundations; erecting and connecting illumination assemblies; furnishing and installing new lamps, conductor and fused connectors; and for all manipulations, labor, tools, equipment and incidentals necessary to complete the work, except as noted below.

New foundations, measured as provided under "Measurement", will be paid for in accordance with the provisions governing the Item, "Roadway Illumination Assembly Foundations".

New conduit, measured as provided under "Measurement", will be paid for in accordance with the provisions governing the Item, "Conduit".

New duct cable, measured as provided under "Measurement", will be paid for in accordance with the provisions governing the Item, "Duct Cable".

New conductors, measured as provided under "Measurement", will be paid for in accordance with the provisions governing the Item, "Electrical Conductor".

ITEM 613

HIGH MAST ILLUMINATION POLES

613.1. Description. This item shall govern for furnishing materials, fabricating and erecting high mast illumination poles, in accordance with the details and dimensions shown on the plans or as directed by the Engineer.

613.2. Materials. All materials furnished, assembled, fabricated or installed under this item shall be new, unless otherwise indicated, and in strict accordance with the details shown on the plans.

613.3. Construction Methods. The Contractor shall furnish six sets of shop drawings of the complete pole in accordance with the Item, "Steel Structures", to the Bridge Engineer, State Department of Highways and Public Transportation, 11th and Brazos Streets, Austin, Texas, 78701, along with certification that all materials used in the fabrication are in accordance with the plans and this specification.

Fabrication and welding shall be in accordance with the Item, "Steel Structures", and with the SDHPT Bulletin C-5, except that the longitudinal seam weld in the pole shall be a minimum of 85 percent penetration as established by radiography or ultrasonic testing by the fabricator.

The careful erection and aligning of the poles furnished under this item is considered an essential feature of the installation of the assembly. Poles shall be fabricated, assembled and installed to the following tolerances:

Straightness: 1/4 inch per 100 feet of length per fabricated section.

Base plate to pole perpendicularity: ± 1/8 inch per 24 inches.

Lap joint: 90 percent of required lap, minimum.

Erected alignment: within 12 inches of plumb condition.

Tolerances for alternate designs shall meet tolerances shown herein.

Fabricated sections requiring field-welded joints shall be assembled in the shop and match-marked prior to galvanizing or painting. Match-marks shall be stencilled in each piece with a steel stencil. Fabricated sections requiring lap joints need not be shop assembled.

During erection of the poles the Contractor shall provide and install sufficient temporary slings, chains or wire rope to prevent unintentional separation of the pole sections.

613.4. Measurement. High Mast Illumination Poles will be measured as each of the several types complete in place.

613.5. Payment. Work performed and materials furnished, as prescribed by this item and measured as provided under "Measurement", will be paid for at the unit price bid for "High Mast Illumination Poles" of the types specified, which price shall be full compensation for furnishing, fabricating, galvanizing, assembling and erecting the pole upon a foundation, and any other materials or equipment required for a complete installation, and for all labor, tools, equipment and incidentals necessary to complete the work.

ITEM 614

HIGH MAST ILLUMINATION ASSEMBLIES

614.1. Description. This item shall govern for the furnishing and assembling of all materials on the Item, "High Mast Illumination Poles", for a complete high mast illumination assembly.

The term "assembly" as used herein shall constitute the complete as-

semblage of parts, equipment and miscellaneous items, except foundations and pole shafts, erected as provided in the plans and in accordance with these specifications, forming a complete and independent lighting unit.

614.2. **Materials.** All materials furnished, assembled, fabricated or installed under this item shall be new, unless otherwise indicated, and in strict accordance with the details shown on the plans.

The Contractor shall furnish six sets of shop drawings of the complete assembly in accordance with the Item, "Steel Structures", except that the drawings shall be submitted to the Chief Engineer of Highway Design, State Department of Highways and Public Transportation, 11th and Brazos Streets, Austin, Texas, 78701, along with certification that all materials used in the fabrication are in accordance with the plans and specifications. No work shall be performed in the shop prior to approval of the above drawings by the Engineer. Any purchase of material prior to fabrication authorization shall be at the Contractor's risk.

The Contractor shall also make brochure submittals on the following: lighting units and ballasts, wire rope and clips, electrical cable, electrical fittings (receptacles, caps, connector bodies), cable grips, drill motor, winch and transformers.

Brochures shall be submitted for approval at the same time and in the same manner as the shop drawings.

614.3. **Construction Methods.** High Mast Illumination Assemblies shall be fabricated and placed in accordance with the details and dimensions shown on the plans, or as directed by the Engineer.

The Floodlight Mounting Ring and Ring Support Assembly shall be shop-assembled after galvanizing and while under no duress shall be match-marked and numbered by stamping in the metal.

All circuits shall test clear of faults, grounds and open circuits.

After satisfactory completion of the above tests, the illumination system shall be placed in operation. Final acceptance of the system will not be made until the entire system has operated satisfactorily for a period of not less than 14 days (this includes energizing and de-energizing the lighting circuits at dusk and dawn). Minor failures of lamps and ballasts will not be cause for modifying and restarting the 14-day test period.

The Contractor will be relieved of the responsibility for maintenance of the system following the successful 14-day test period.

The Contractor will not be required to pay for electrical energy consumed by the system during the period of trial operation.

The Contractor will not be required to pay for electrical energy consumed by the system during the period of trial operation.

614.4. Measurement. High Mast Illumination Assemblies will be measured as each of the several types of assemblies, complete in place.

614.5. Payment. The work performed and materials furnished, as prescribed by this item and measured as provided under "Measurement", will be paid for at the unit price bid for "High Mast Illumination Assemblies" of the types specified, which price shall be full compensation for furnishing, installing and testing all lighting units, ballasts, lamps, obstruction lights, hoisting assembly, power drive assembly and any other materials and equipment required for a complete installation and for all labor, tools, equipment and incidentals necessary to complete the work.

The furnishing and erection of the pole shaft will be paid for under the Item, "High Mast Illumination Poles".

ITEM 616

ROADWAY ILLUMINATION ASSEMBLY FOUNDATIONS

616.1. Description. This item shall govern for the materials and equipment used and for the construction of the various types of foundations as shown on the plans.

616.2. Materials. All materials furnished, assembled, fabricated or installed under this item shall be new and in strict accordance with pertinent specifications and the details shown on the plans.

616.3. Construction Methods. Foundations for roadway illumination assemblies shall be constructed to the dimensions shown on the plans or as directed by the Engineer.

After the foundation has been placed and before final payment is made, the area around the foundation shall be backfilled, compacted and all paving or surface treatment which may have been disturbed by the construction operations shall be replaced in a manner satisfactory to the Engineer. The site shall be left in a neat and sightly condition.

616.4. Measurement. Roadway Illumination Assembly Foundations will be measured as each assembly foundation of the various types, complete in place.

616.5. Payment. Foundations constructed as prescribed by this item and measured as provided under "Measurement", will be paid for at the unit price bid for "Roadway Illumination Assembly Foundations", of the type or types specified, which prices shall each be full compensation for fur-

nishing and installing all materials, including ground rods, anchor bolts, reinforcing steel, conduit, grout, washers and nuts; excavating and backfilling, replacing flexible base, concrete, sod, seal or other surface treatment; and for all labor, tools, equipment and incidentals necessary to complete the work.

ITEM 618

CONDUIT

618.1. **Description.** This item shall govern for the furnishing and placing of conduit of the types and sizes indicated on the plans, including junction boxes, fittings, expansion joints, attachments and incidentals.

618.2. **Materials.** All conduit and fittings shall meet the requirements of the National Electrical Code and shall be listed by Underwriters Laboratories, and shall be marked in accordance with the applicable requirements of the NEC.

Junction boxes, expansion joints and conduit fittings shall be fabricated from a material similar to the connecting conduit unless indicated otherwise on the plans and shall be listed by Underwriters Laboratories.

Rigid metal conduit shall be steel, hot-dipped galvanized inside and outside. When tested in accordance with ASTM Designation: A 90, zinc coating shall be a minimum of 1.5 ounces per square foot. Electrical metallic tubing and intermediate metal conduit shall be steel, hot-dipped galvanized on the outside and protected on the inside with a suitable corrosion-resistant material. Fittings shall be rain-tight. Set screw and pressure cast fittings will not be permitted.

Polyvinyl chloride and high-density polyethylene conduit shall meet the requirements of NEMA Standard TC-2 and UL 651, and the requirements of NEC for Rigid Nonmetallic Conduit. Unless otherwise noted on the plans, PVC and HDP conduit shall be heavy-wall (Schedule 40).

Flexible conduit shall be liquid-tight metal meeting requirement of NEC and shall be UL-listed. Where conduit system is metallic, all lengths of flexible metal conduit shall be fitted with bonding jumpers.

618.3. **Construction Methods.** The conduit, junction boxes, fittings and incidentals shall be placed in accordance with the lines, grades, details and dimensions shown on the plans, or as directed by the Engineer. Installation of conduit shall be in accordance with the requirements of NEC. Conduit

placed for concrete encasement shall be secured and supported in such a manner that the alignment will not be disturbed during placement of the concrete. No concrete shall be placed until all of the conduit ends have been capped and all box openings closed.

Where conduit is threaded in the field, a standard conduit cutting die with a 3/4 inch taper per foot shall be used. Conduit placed on structures shall be firmly fastened within 3 feet of each outlet box, junction box or fitting and at other locations as required by the NEC.

When required by the Engineer, immediately prior to installation of conductors or final acceptance, a spherical template having a diameter of not less than 75 percent of the inside diameter of the conduit shall be drawn through the conduit to insure that the conduit is free from obstruction; then all conduit ends shall be closed using permanent type caps.

618.4. **Sampling and Testing.** When tests are required, sampling and testing will be in accordance with the Department's Manual of Testing Procedures.

618.5. **Measurement.** Conduit of the types and sizes specified on the plans will be measured by the linear foot along the main line of the conduit except that flexible metal conduit will not be paid for directly but will be subsidiary to the various pay items. No measurement will be allowed under this item for conduit used in circuit protector assemblies, service poles, transformer stations or roadway illumination assembly foundations.

618.6. **Payment.** Conduit, measured as provided under "Measurement", will be paid for at the unit price bid for "Conduit", of the types and sizes specified, which prices shall each be full compensation for furnishing and installing all conduit, jacking, boring, excavating, backfilling, replacing pavement or surface treatment and marking location of conduit; for furnishing and installing all fittings, outlet boxes, bends, expansion devices, junction boxes, attachment devices and incidentals, and for all labor, tools, equipment and incidentals as necessary to complete the work.

ITEM 620

ELECTRICAL CONDUCTOR

620.1. **Description.** This item shall govern for the furnishing and placing of all electrical conductors required on the plans, except conductors specifically covered by other items in the contract.

620.2. **Materials.** Electrical conductors shall be copper of the size and type indicated in the plans. All conductors shall meet the requirements of Article 310 of the NEC and shall be listed by UL for the type indicated.

Unless otherwise noted in the plans, all insulated conductors shall be 600 volt rated and shall be approved for wet locations. Bare conductors size AWG No. 6 and larger shall be stranded. All insulated conductors shall be stranded and shall be marked in accordance with UL and NEC requirements. For bare conductors, the Contractor shall furnish evidence that the conductor meets NEC standards and is UL-listed.

620.3. **Construction Methods.** The conductors shall be installed in accordance with the details on the plans or as directed by the Engineer. Conductors shall be continuous, without splices, from terminal to terminal. Splicing will be permitted only in junction boxes or ground boxes. Splices in ground boxes or other locations subject to moisture shall be made with suitable materials as shown in the plans or as approved by the Engineer.

When required by the Engineer, the Contractor shall assist in making insulation resistance tests on the conductor prior to making up final connections.

620.4. **Measurement.** Unless otherwise shown on plans, Electrical Conductor will be measured by the linear foot of single conductor, complete in place, the measurement being made along the conduit in which the conductor is placed. No measurement will be allowed under this item for conductors used in connecting the components of transformer stations, service poles, circuit protector assemblies or conductors used in roadway illumination assemblies.

620.5. **Payment.** Unless otherwise shown on plans, Electrical Conductor, measured as provided under "Measurement", will be paid for at the unit price bid for "Electrical Conductor", of the specified size and type, which price shall be full compensation for furnishing and installing all conductors, for pulling through conduit or duct, testing and splicing, and for all labor, tools, equipment and incidentals necessary to complete the work.

When shown on plans, direct payment will not be made but shall be considered subsidiary to the various bid items.

ITEM 622

DUCT CABLE

622.1. **Description.** This item shall govern for the fabrication, furnishing and placing of all duct cable required on the plans.

Duct cable as used herein shall consist of a complete assembly of conductors of the types and sizes specified, enclosed in a high density or medium density polyethylene duct which meets the requirements set forth in this item.

622.2. Materials. Bare conductors shall be copper, annealed, uncoated and conforming to the NEC. Conductors No. 6 AWG and larger shall be stranded.

Insulated conductors shall be copper, annealed, coated or uncoated and shall be NEC Type TW, THW or THWN. Insulated conductors shall be color-coded for circuit identification purposes.

The duct shall be compounded from high density or medium density polyethylene and shall meet the requirements of NEMA Standard TC-7 for Type III duct.

The complete assembly shall be packaged on reels having sufficient diameter to prevent injecting permanent set or injury. The duct shall be the size indicated on the plans, but in no case shall the sum of the cross-sectional area of the individual conductors exceed 40 percent of the interior cross-sectional area of the duct. Each reel shall be adequately identified and reflect the voltage, insulation, number of conductors, conductor size, length, duct size and the trade name under which it is produced.

Before installation on this project, the Contractor shall furnish conclusive evidence to the Engineer that all duct cable complies with the requirements set forth in this specification or indicated in the plans. Individual conductors shall be marked in accordance with NEC standards.

622.3. Construction Methods. The duct cable shall be installed in accordance with these specifications and the details on the plans or as directed by the Engineer. The duct cable will be placed by open trench methods at the depth indicated on the plans, except at locations where the duct cable is to be enclosed in conduit. The trench will be backfilled and compacted in accordance with the Item, "Excavation and Backfill for Sewers". Where it becomes necessary to disturb paved surfaces or riprap, the Contractor will be required to saw the edges of the trench prior to excavation or operations. The Contractor, unless otherwise specifically relieved of the responsibility, shall replace all sod, pavement structure, pavement, riprap or other materials disturbed by his operations. Materials and methods used shall be approved by the Engineer. The duct cable shall be continuous, without splices, from terminal to terminal, and bends will be formed with large radii to provide free movement of conductors. The entire installation will be accomplished in a neat and workmanlike manner. When required by the Engineer, the Contractor shall assist in making insulation resistance tests prior to making up final connections.

622.4. Measurement. Unless otherwise shown on plans, Duct Cable of the types and sizes specified on the plans will be measured by the linear foot complete in place, the measurement being made along the trench or conduit in which the duct cable is placed and shall extend to the end of the conductor group from which the duct has been removed.

622.5. Payment. Unless otherwise shown on plans, Duct Cable, measured as provided under "Measurement", will be paid for at the unit price bid for "Duct Cable", of the specified size and type, which price shall be full compensation for furnishing and installing all duct cable, for pulling through conduit, excavating and backfilling the trenches, replacing base material, seal, riprap, pavement, topsoil, sod or other surface treatment, and for all labor, tools, equipment and incidentals necessary to complete the work.

When shown on plans, direct payment will not be made but shall be considered subsidiary to the various bid items.

ITEM 624

GROUND BOX

624.1. Description. This item shall govern the construction, furnishing and installation of precast ground boxes in accordance with locations and details shown on the plans. Unless otherwise noted on plans, ground boxes shall be precast concrete or precast fiberglass at the option of the Contractor. Only one type ground box shall be used.

624.2. Materials. Precast Concrete Ground Boxes: Concrete used in the construction of the ground boxes shall be Class A conforming to the requirements of the Item, "Concrete for Structures". Reinforcing steel used in the construction of the ground boxes shall conform to the requirements of the Item, "Reinforcing Steel".

Precast Fiberglass Ground Boxes: Fiberglass ground boxes shall be constructed from a reinforced plastic mortar comprised of sand, gravel and polyester resin bonded by fiberglass. Boxes shall be capable of withstanding a 5,000-pound single load over a 10 inch x 10 inch area.

624.3. Construction Methods. The construction and installation of the ground boxes shall be carried out in compliance with the requirements herein stated and in conformity with the details shown on the plans. Upon completion of the work, each installation shall present a neat and workmanlike finished appearance.

624.4. Measurement. Unless otherwise shown on plans, Ground Boxes will be measured as each ground box, complete in place.

624.5. Payment. Unless otherwise shown on plans, work performed and materials furnished as prescribed in this item, measured as provided under "Measurement", will be paid for at the unit price bid for "Ground Box",

"Ground Box (Concrete)", or "Ground Box (Fiberglass)", which shall be full compensation for the required excavation and backfill, for construction, furnishing and installing the precast ground box and for all other details and incidentals necessary to complete the work.

When shown on plans, direct payment will not be made but shall be considered subsidiary to the various bid items.

ITEM 626

CIRCUIT PROTECTOR ASSEMBLY

626.1. **Description.** This item shall govern for the furnishing and placing of Circuit Protector Assemblies as shown on the plans.

The term "Assembly", as used herein, shall constitute the complete assemblage of parts, equipment and miscellaneous items as provided for in the plans, forming a complete and independent circuit protection unit.

626.2. **Materials.** All materials furnished, assembled, fabricated or installed under this item shall be new and in strict accordance with the details shown on the plans.

626.3. **Construction Methods.** Circuit Protector Assemblies shall be assembled and placed in accordance with the details and dimensions shown on the plans or as directed by the Engineer.

626.4. **Measurement.** Circuit Protector Assemblies will be measured as each assembly, complete in place.

626.5. **Payment.** Work performed and materials furnished as prescribed by this item, measured as provided under "Measurement", will be paid for at the unit price bid for "Circuit Protector Assembly", which price shall be full compensation for furnishing all materials, installing and connecting all parts including enclosures, switches, breakers, conduit, fittings, conductor, brackets, bolts, hangers, hardware and for all manipulation, labor, tools, equipment and incidentals necessary to complete the work.

ITEM 628

SERVICE POLES

628.1. **Description.** This item shall govern for the furnishing and placing of service poles as shown on the plans.

The term "Service Poles", as used herein, shall constitute the complete assemblage of parts, equipment and miscellaneous items as provided for in the plans, forming a complete and independent point of service for the various circuits.

628.2. **Materials.** All materials furnished, assembled, fabricated or installed under this item shall be in strict accordance with the details shown on the plans.

628.3. **Construction Methods.** Service poles shall be assembled and placed in accordance with the details and dimensions shown on the plans or as directed by the Engineer.

628.4. **Measurement.** Service Poles will be measured as each service pole, of the various types, complete in place.

628.5. **Payment.** Work performed and materials furnished as prescribed by this item, measured as provided under "Measurement", will be paid for at the unit price bid for "Service Poles", of the type or types specified, which price shall be full compensation for furnishing all material, placing and connecting all components including enclosures, switches, breakers, conduit, fittings, conductor, brackets, bolts, hangers, hardware and for all manipulation, labor, tools, equipment and incidentals necessary to complete the work.

ITEM 630

TRANSFORMER STATIONS

630.1. **Description.** This item shall govern for the furnishing and placing of transformer stations as shown on the plans.

The term "Transformer Station", as used herein, shall constitute the complete assemblage of parts, equipment and miscellaneous items as provided for in the plans, forming a complete and independent point of transformation and service.

630.2. **Materials.** All materials furnished, assembled, fabricated or installed under this item shall be in strict accordance with the details shown on the plans.

630.3. **Construction Methods.** Transformer Stations shall be assembled and placed in accordance with the details and dimensions shown on the plans or as directed by the Engineer.

630.4. **Measurement.** Transformer Stations will be measured as each transformer station, of the various types, complete in place.

630.5. **Payment.** Work performed and materials furnished as prescribed by this item, measured as provided under "Measurement", will be paid for at the unit price bid for "Transformer Stations", of the type or types specified, which price shall be full compensation for furnishing all material, placing and connecting all components including poles, cross arms, braces, cut-outs, arrestors, transformers, controller, light-sensitive control

device, breakers, switches, conduit, fittings, conductor, hangers, hardware and for all manipulation, labor, tools, equipment and incidentals necessary to complete the work.

ITEM 632

INSTALLATION OF HIGHWAY TRAFFIC SIGNALS

632.1. **Description.** This item shall govern for the entire construction of a highway traffic signal installation with, where applicable, illumination in accordance with the layouts and details shown on the plans and with the traffic signal equipment specifications included herein.

632.2. **Scope of Work.** This item shall include all labor, materials, tools, equipment, and any incidentals necessary to complete the installation of highway traffic signals in the limits of the project. All electrical wire fittings and other materials shall conform to the requirements of the National Electrical Code and any additional requirements of the local municipal or utility codes. All materials shall be new.

632.3. **Electrical Requirements:**

(1) **Power Connection.** The Contractor shall make all arrangements for connection to the power supply including any permits required for the work to be done under the Contract. Any required materials not provided by the power company shall be supplied and installed by the Contractor in accordance with the plans. Unless otherwise called for in the plans, the power connection shall be made to a 120 volt, single-phase, 60 cycle A.C. supply. The wire used for the power connection shall at least be the minimum size indicated on the plans and shall be insulated for 600 volts. The common wire shall be coded white and the positive wire shall be coded black.

(2) **Conduit.** Unless otherwise shown on the plans, all conductors shall be in conduit except when in metal poles. All conduit and fittings shall be of the sizes and types shown on the plans. Each section of conduit shall bear evidence of approval by Underwriter's Laboratories. The Contractor may, at his own expense, use conduit of larger size than specified on the plans providing that the larger size is used for the entire length of the conduit run. Conduit terminating in posts or pedestal bases shall extend vertically, approximately 2 inches above the concrete foundation. Field bends in rigid metal conduit shall have a minimum radius of 12 diameters of the nominal size of the conduit. Each length of galvanized rigid metal conduit, where used, shall be reamed and threaded on each end and couplings shall be made up tight. PVC conduit shall be joined by the solvent-weld method in accordance with the conduit manufacturer's recommendation. No reducer couplings shall be used unless specifically indicated on the plans. All conduit terminations shall be fitted with bushings.

All conduit and fittings shall have the burrs and rough places smoothed and shall be clean and free of obstructions before the cable is installed. Ends of conduit shall be capped or plugged until starting of wiring. Upon request by the Engineer, the Contractor shall draw a full-size metal brush, attached by swivel joint to a pull tape through metal conduit and a spherical template having a diameter not less than 75 percent of the inside diameter through PVC conduit to insure that the conduit is clean and free from obstructions. A nylon or non-metal pull tape shall be used in pulling cables and conductors through PVC conduit. Metal tapes will not be permitted in PVC conduit. The conduits shall be placed as shown on the plans or as directed by the Engineer. Unless otherwise shown on the plans or directed by the Engineer, conduit placed in an open trench shall be placed at least 18 inches deep.

Conduit placed for concrete encasement shall be secured and supported in such a manner that the alignment will not be disturbed during placement of the concrete. No concrete shall be placed until all of the conduit ends have been capped and all box openings closed.

PVC conduit which is to be placed under existing pavement, sidewalks, and driveways shall be placed by first providing a void through which the PVC conduit shall be inserted. The void may be accomplished by either boring or jacking a mandrel. Where conduit is to be placed under existing pavement, the jacking method is to be used unless approval is given by the Engineer for placement of conduit by boring. If it is determined by the Engineer that it is impractical to place the conduit as outlined above due to unforseen obstructions, permission will be granted by the Engineer for the Contractor to cut the existing pavement.

Pits for jacking or boring shall not be closer than 2 feet to the back of the curb or the outside edge of the shoulder unless otherwise directed by the Engineer. The jacking and boring method used shall not interfere with the operation of street, highway, or other facility, and shall not weaken or damage any embankment, structure, or pavement. Boring is to be done by mechanical means providing a maximum one-inch overcut for the conduit to be placed, and use of water or other fluids in connection with the boring operation will be permitted only to the extent to lubricate cuttings. Water jetting will not be permitted.

(3) **Wiring.** All wire and cable shall conform to the requirements of type and gauge shown on the plans unless specifically covered by other items of this contract. Except for span wire suspended cables and electrical wiring within steel signal poles, all cables and single conductor wire within 21 feet above the ground shall be placed in metal conduit. Power lines carried down poles shall be placed in metal conduit. Power entrance to a ground mounted controller shall be made through underground conduit.

Wiring for the controller shall consist of connecting to its terminals (1) wires to signals, (2) wires to detectors, (3) the power wires, and (4) the ground wires. Other wiring for the controller shall be as required by the wiring diagrams and instructions furnished with the controller by the manufacturer.

Wiring for the signals shall consist of connecting the terminal block in each individual section to the common terminal block in each signal face assembly and, where applicable, connecting the common terminal block in each individual signal section to the terminal block in the signal face assembly terminal compartment. All connecting wires and all conductors running from any terminal points located in the pole or transformer base to the signal face assembly terminals shall be No. 12 stranded American Wire Gauge. No aluminum wiring will be permitted.

The ends of all wires which are to be attached to terminal posts shall be provided with self-insulated solderless terminals that meet the requirements of the UL test specifications. Numbered identification tags of metal, plastic, or tape shall be placed around each wire adjacent to wire ends in the controller, signal heads, and signal pole base terminal boxes.

Unless otherwise called for in the plans, splices will be permitted in the wires of signal and detector conductors only in the transformer base or handhole of each signal pole and at terminal points shown or called for in the plans. If, however, the lead-in conductors from the detectors to the controller are of a different type than the detector leads, a watertight splice acceptable to the Engineer may be made in a pullbox adjacent to the detector location. Any other splices may be made only with written permission of the Engineer. All splices shall be water tight.

(4) **Grounding and Bonding.** The signal housing, controller housing, signal common and service common shall be grounded. All grounding shall be as shown on the plans and/or as may be indicated in the manufacturer's specifications and wiring diagrams. All grounding devices used shall conform to the requirements of the National Electrical Code. The service common at the pole from which the power is taken shall be grounded. Metal conduit and metal signal posts or pedestals shall be bonded to form a continuous system and shall be effectively grounded. Bonding jumpers shall be No. 6 copper wire or equal.

632.4. Concrete. All concrete materials and their preparations shall be in accordance with the requirements of the Item, "Concrete for Structures" and the additional requirements herein. All concrete shall be Class "A". Materials for drilled shaft foundations shall be in accordance with the Item, "Drilled Shaft Foundations".

Reinforcing steel shall conform to the requirements of the Item, "Reinforcing Steel". The sizes and dimensions shall be as shown on the plans.

632.5. Concrete Foundation for Controller and Signal Posts.

(1) Excavation for all required foundations shall be done in accordance with lines and depths indicated on the plans. All loose material shall be removed from the excavation before the concrete is placed. Any water shall be removed by pumping or bailing. The use of explosives will not be permitted.

(2) Foundations shall be constructed to the dimensions shown on the plans or directed by the Engineer. Care shall be used to insure that the top of the finished foundation is level. Anchor bolts and conduits shall be held rigidly in place by a template until the concrete is set. A mechanical vibrator shall be used for compacting and working in concrete. After the concrete has been placed and the top struck off, it shall be covered with wet cotton or burlap mats, for not less than 96 hours. All bracing and templates for anchor bolts shall remain in place for 96 hours after the concrete is poured. During that time, the anchor bolts and conduit shall not be subjected to any applied strain.

(3) Backfill shall be tamped with mechanical tamps in 6 inch layers to the density of the surrounding ground. Where excavation is made in the surfaced shoulder, the shoulder shall be replaced with material equal to the original construction.

(4) All excavated material not required for backfill shall be promptly removed and disposed of by the Contractor outside the limits of the project.

(5) No concrete shall be placed when the atmospheric temperature is at or below 40 F (taken in shade away from artificial heat) unless permission to do so is given by the Engineer. Curing and placement of concrete at temperatures of less than 40 F, when such placement is permitted by the Engineer, shall be in accordance with the requirements of the Item, "Concrete for Structures".

632.6. Cleaning, Paint and Painting. All cleaning, paint and painting, where required, shall conform to the requirements of the Item, "Cleaning, Paint and Painting". The metal-pipe conduit and exposed conduit fittings which are not galvanized shall be given one coat of No. 802 Aluminum paint after they are in place.

No painting will be required for controller housings or signal heads except those parts on which the paint has been scratched or marred, and such parts shall be given two coats of high-grade enamel or paint of the same color as the factory paint.

632.7. Preservation of Sod, Shrubbery and Trees. The Contractor shall assume full responsibility for the preservation of all sod, shrubbery and trees at the site during the installation.

All sod and shrubbery that are removed shall be carefully preserved and replaced in their original position. Damaged sod or shrubbery shall be replaced by the Contractor at his own expense.

632.8. **Removal and Replacement of Curbs and Walks.** The Contractor shall secure permission from the proper authority and the approval of the Engineer before cutting into or removing any walks or curbs, which might be required in making the installation.

After the work is completed, the Contractor shall restore any curbs or walks which have been removed to the equivalent of their original condition and to the satisfaction of the Engineer.

632.9. **Disposition of Keys for Controllers and Instruction Manual for the Controller.** When the project is complete, the keys for the controller cabinets shall be delivered to the Engineer.

The Instruction Manual and wiring diagrams for the controller furnished shall be left inside the controller cabinet.

632.10. **Measurement.** The complete signal installation as indicated on the plans and as described herein when completely installed will be measured by the complete traffic signal installation.

632.11. **Payment.** Payment shall be made at the contract lump sum bid for "Installation of Highway Traffic Signals", which price shall be full compensation for furnishing, placing and testing all materials and equipment and for all tools, labor, equipment, and incidentals necessary to complete the work.

ITEM 634

PLYWOOD SIGNS (Type A)

634.1. **Description.** This item shall govern for plywood signs having sign blanks made from high density plastic-faced plywood and having sign faces reflectorized with flat surface reflective sheeting.

634.2. **Materials.** Copies of Departmental Material Specifications are available from the State Department of Highways and Public Transportation, Materials and Tests Division, 38th and Jackson St., Austin, Texas, 78703.

(1) **Sign Blanks.** Sign blanks shall be in accordance with Departmental Specification, D-9-7100, "Plywood Sign Blanks".

Sign faces are not acceptable if the variation of the surface in any direc-

tion exceeds an amount equal to 1/8-inch per foot of defect in width or height as the case may be. Any vertical or horizontal misalignment between panel faces shall not be greater than 1/16-inch.

(2) **Sign Face Reflectorization.** Sign faces shall be reflectorized with flat surface reflective sheeting and shall be of the color shown on the plans. The sheeting shall be of the same manufacture for all signs of the same classification throughout the project and shall be in accordance with Departmental Specification D-9-8300, "Flat Surface Reflective Sheeting", Type A.

(3) **Sign Message.** The sign message shall be of the size, type and color shown on the plans.

(a) Screen processing ink approved by the Department's Material and Test Division shall be used for sign messages applied to sign faces by the screen process. Messages shall have clean, sharp edges with no runs or sags and shall be of sufficient thickness to completely cover the background material. Screen inks shall conform to Departmental Specification D-9-8300, "Flat Surface Reflective Sheeting".

(b) Reflectorized removable legend specified on the plans for various signs shall conform with Departmental Specification, D-9-8400, "Reflectorized Removable Legend".

(c) Reflectorized sheeting legend, specified on the plans for various signs, shall be made from material conforming to Departmental Specification D-9-8300, "Flat Surface Reflective Sheeting".

(d) When sheet aluminum signs are required as a part of the message, they shall conform with the plans and with the Item, "Aluminum Signs (Type A)".

(4) **Hardware.** All bolts, nuts, washers, lock washers, and other hardware used in making the signs which are not specifically covered on the plans shall be galvanized steel, stainless steel or aluminum in conformance with Departmental Specification D-9-7120, "Sign Hardware". Dissimilar metals shall be so selected or insulated as to prevent corrosion.

(5) **Sign Post Connections.** All sign post or support connections shall be capable of developing the full strength of the sign and they shall be stainless steel, galvanized steel, or aluminum, in conformance with Departmental Specification D-9-7120, "Sign Hardware". Dissimilar metals shall be so selected or insulated as to prevent corrosion.

634.3. Fabrication.

(1) **Working Drawings.** Prior to fabrication the Contractor shall submit for approval of the Engineer five prints of the working drawing for each sign using removable reflectorized legend, except that when there are two

or more signs of identical design, a working drawing for only one of the signs need be submitted. The working drawings shall show the details of the panels, frames, wind beams, stiffeners, joint backing plates, splices, if any, fasteners, brackets, sign post or support connections, and methods of attaching legend to the sign face. In addition, the working drawing shall show letter height and interline spacing of the legend in sufficient detail to check against the plans.

(2) Sign blanks shall be cut to the proper size and shape shown on the plans for the various signs. Thickness of the sign blanks shall be as shown on the plans. Unless otherwise shown on the plans, no panel shall have a face dimension less than 2′-0″. Signs 4′ x 8′ or smaller in either dimension shall be of one-piece construction.

(3) All sign blanks or sign panel fabrication, including cutting, drilling, and edge routing shall be completed prior to application of reflective materials.

(4) Reflective Sheeting shall be applied to sign faces in conformance with the recommended procedures of the manufacturer of the sheeting.

Whenever a sign face is comprised of two or more panels, the reflective sheeting on adjacent panels must be matched carefully for color to provide uniform appearance and brilliance both day and night. Because one roll of sheeting may be sufficient to cover several panels, each panel shall be match-marked consecutively as sheeting is applied from any one sheeting roll. Panels shall then be assembled consecutively as shown below to construct the completed sign:

TYPICAL ASSEMBLY

△ — Matchmarks

L — Left edge of sheeting as it comes off the roll.

R — Right edge of sheeting as it comes off the roll.

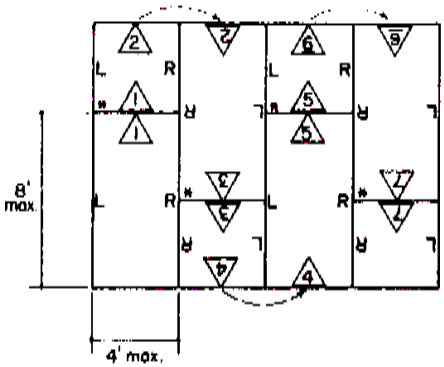

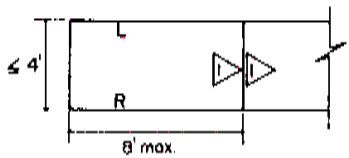

* Note: Staggered Horizontal Joints are preferred; however a single horizontal joint across the sign face is permissible.

Nonconformance with this assembly procedure may result in non-uniform shading and an undesirable contrast between adjacent widths of applied sheeting which will not be acceptable. When splicing of sheeting is necessary, the number of splices shall be held to a minimum consistent with the sheeting widths furnished by the manufacturer. The minimum dimension for any one piece of sheeting material shall be 1′-0″.

(5) **Cutting, Handling and Storing Sign Blanks and Panels.** High density exterior type plywood panels may be fabricated with standard woodworking equipment. Precaution shall be taken to prevent overlay surfaces from coming in contact with any substance which would inhibit adhesion of reflective sheeting. Fabrication of all plywood signs shall be accomplished in a uniform and workmanlike manner.

(6) Sign identification decals shall be coded and attached to the sign panels after fabrication as specified in the plans.

634.4. Erection.

(1) Prior to erection, all bolt heads and hardware showing on sign faces shall be covered with reflective sheeting or painted similar in color to the sign face.

(2) Completed sign blanks and panels shall be handled and stored in such manner that corners, edges and faces are not damaged. Any mars, scratches or other damage to the sign faces which are not visible when viewed, as outlined in the Department's *MANUAL OF TESTING PROCEDURES*, at a distance of fifty feet, shall be acceptable. Finished sign faces shall be stored off the ground in a vertical position and protected from the weather until properly erected.

(3) Sign identification decals shall be coded after erection as specified in the plans.

634.5. Cleaning. The signs shall be cleaned prior to inspection. The signs shall be washed with a cleaning solution acceptable to the manufacturer of the sign coating to remove all grease, oil, dirt, smears, streaks, finger marks, and other foreign particles prior to shop inspection and prior to final inspection, after erection.

634.6. Sampling and Testing. Sampling and testing will be in accordance with the Department's *MANUAL OF TESTING PROCEDURES.*

634.6. Measurement. Plywood Signs (Type A) will be measured by the square foot. Measurement will be made to the nearest 0.01 square foot of the area of the vertical front face of the signs erected as determined from the plans and the specifications with no deductions for rounding off corners. No measurement will be made for area in excess of this minimum area.

634.8. Payment. Payment for Plywood Signs (Type A) shall be made at the unit price bid per square foot for "Plywood Signs (Type A)" as specified, which price shall be full compensation for furnishing the high density sign blanks and/or panels; fabrication of the blanks and/or panels; furnishing and application of reflective sheeting to the faces of blanks and/or panels; application of message to the sign faces as required by the plans; furnishing and fabrication of frames, wind beams, stiffeners, and/or joint backing strips that are required; furnishing all bolts, rivets, screws, fasteners, clamps, brackets and sign post or support connections; assembling and erecting the signs, washing and cleaning the signs after erection; and all other labor, materials, and incidentals necessary to provide signs complete and attached to the sign posts or supports.

ITEM 636

ALUMINUM SIGNS (Type A)

636.1. Description. This item shall govern for aluminum signs which are of one piece construction made from sheet aluminum, and which have the face side reflectorized.

636.2. Materials. Copies of Departmental Material Specifications are available from the State Department of Highways and Public Transportation, Materials and Tests Division, 38th and Jackson St., Austin, Texas, 78703.

(1) Sign Blanks. Sheet aluminum sign blanks shall conform with Departmental Specification D-9-7110, "Aluminum Sign Blanks", and shall be of the thickness shown on the plans.

(2) Sign Face Reflectorization. Sign face reflectorization shall be of the color shown on the plans.

Flat surface reflective sheeting shall be used for reflectorization of sign faces with messages applied by the screen process, using process ink, in conformance with the plans. Flat surface reflective sheeting shall be of the same manufacture for all signs of the same classification throughout the project.

Flat surface reflective sheeting shall conform with Departmental Specification D-9-8300, "Flat Surface Reflective Sheeting", Type A.

(3) Hardware for Attaching Aluminum Signs (Type A) to Guide Signs. Attachments of Aluminum Signs (Type A) to guide signs as a part of the guide sign message shall be made by screws of stainless steel, galvanized steel, or aluminum, in conformance with Departmental Specification D-9-7120, "Sign Hardware". Dissimilar metals shall be so selected or insulated as to prevent corrosion.

When required by the plans, aluminum hardware used for signs located in coastal and heavy industrial atmospheres shall be given a dichromate sealed finish conforming with the requirements of Departmental Specification D-9-7120, "Sign Hardware".

636.3. Fabrication.

(1) **Cutting and Handling.** Sign blanks shall be cut to the proper size and shape as shown on the plans, shall be free of buckles, warps, burrs, dents, cockles, and other defects resulting from fabrication, and shall be essentially a plane surface.

The sign blanks shall not be handled except by device or clean canvas gloves between all cleaning operations and the application of the reflective material. There shall be no opportunity for the blanks to come in contact with grease, oils, or contaminants prior to the application of the reflective material.

(2) **Application of Reflective Sheeting to Sign Faces.** Sheeting shall be applied to sign faces in conformance with the recommended procedures of the manufacturer of the sheeting. When splicing of sheeting is necessary, the number of splices shall be held to a minimum consistent with the sheeting widths furnished by the manufacturer, and the minimum dimension for any one piece of sheeting shall be 1'-0".

(3) **Sign Message.** Sign messages shall be the size and color shown on the plans. Screen processing ink approved by the Department's Materials and Tests Division shall be used for sign messages applied to sign faces by the screen process. Messages shall have clean, sharp edges with no runs or sags and shall be of sufficient thickness to completely cover the background material. Screen inks shall conform to Departmental Specification D-9-8300, "Flat Surface Reflective Sheeting".

636.4. Sign Identification Decals. Sign identification decals shall be affixed to each independently mounted sign panel and coded after fabrication and after erection as specified in the plans.

636.5. Sign Post Connections. Sign post connections shall conform with the designs shown on the plans.

636.6. Cleaning. The signs shall be cleaned prior to inspection. The signs shall be washed with a cleaning solution acceptable to the manufacturer of the sign coating to remove all grease, oil, dirt, smears, streaks, finger marks, and other foreign particles prior to shop inspection and prior to final inspection, after erection.

636.7. Sampling and Testing will be in accordance with the Department's *MANUAL OF TESTING PROCEDURES.*

636.8. Measurement. Aluminum Signs (Type A) will be measured by the square foot. Measurement will be made to the nearest 0.01 square foot of the area of the vertical front face of the signs erected as determined from the plans and specifications, with no deductions for rounding off corners, and no measurement will be made for area in excess of this minimum area.

636.9. Payment. Payment for Aluminum Signs (Type A) shall be made at the unit price bid per square foot for "Aluminum Signs (Type A)" which price shall be full compensation for furnishing sheet aluminum sign blanks; fabrication of the sign blanks, treatment of the sign blanks required by this specification; furnishing and applying reflective sheeting to the sign faces; screening of messages as required by the plans; furnishing the sign connections; washing and cleaning the signs after erection; and furnishing all other materials, labor and incidentals necessary to provide signs completed and attached to the sign support or guide sign as specified on the plans.

ITEM 638

ALUMINUM RAILROAD

CROSSBUCK SIGN PANEL ASSEMBLY

638.1. Description. This item shall govern for railroad crossbuck sign panel assemblies which are made from aluminum and which have the face side reflectorized.

638.2. Materials. Copies of Departmental Material Specifications are available from the State Department of Highways and Public Transportation, Materials and Tests Division, 38th and Jackson St., Austin, Texas, 78703.

(1) **Sign Panels.** Extruded aluminum railroad crossbuck sign panels and sheet aluminum supplemental track number signs shall be of the thickness shown on the plans and shall conform with Departmental Specification D-9-7110, "Aluminum Sign Blanks".

Panels shall be dimensioned as shown in the plans.

(2) **Sign Face Reflectorization.** Sign face reflectorization shall be of the color shown on the plans.

Flat surface reflective sheeting shall be used for reflectorization of sign panels and shall conform with Departmental Specification D-9-8300, "Flat Surface Reflective Sheeting", Type C. All sheeting shall be of the same manufacture for all railroad crossbuck assemblies on this project.

(3) **Sign Support Connections and Hardware.** Sign support connections shall be as shown on the plans and shall conform with Departmental Specification D-9-7120, "Sign Hardware".

All bolts, nuts, washers, lock washers, fasteners, and other hardware used in making the signs which are not specifically covered on the plans shall be galvanized steel, stainless steel, or aluminum, subject to the condition that dissimilar metals shall be so selected or insulated as to prevent corrosion.

638.3. Fabrication.

(1) **Cutting and Handling.** All fabrication of sign panels including cutting and drilling or punching of holes shall be completed prior to metal degreasing and application of the reflective material.

The sign panels shall not be handled except by device or clean canvas gloves between all cleaning operations and the application of the reflective material. There shall be no opportunity for the panels to come in contact with grease, oils, or contaminants prior to the application of the reflective material.

(2) **Application of Reflective Sheeting to Sign Faces.** Reflective sheeting shall be applied without splices to the sign faces in conformance with the recommended procedures of the manufacturer of the reflective sheeting.

(3) **Sign Message.** The sign message shall be of the size, type and color shown on the plans. Processing ink used in applying the message shall be approved by the Department's Materials and Tests Division. The message shall have clean, sharp edges with no runs or sags and shall be of sufficient thickness to completely cover the background material. Screen inks shall conform to Departmental Specification D-9-8300, "Flat Surface Reflective Sheeting".

638.4. Cleaning. The signs shall be cleaned prior to inspection. The signs shall be washed with a cleaning solution acceptable to the manufacturer of the sign coating to remove all grease, oil, dirt, smears, streaks, finger marks, and other foreign particles prior to shop inspection and prior to final inspection, after erection.

638.5. Sampling and Testing. Sampling and testing will be in accordance with the Department's *MANUAL OF TESTING PROCEDURES.*

638.6. Measurement. Aluminum Railroad Crossbuck Sign Panel Assembly will be measured by each two-panel crossbuck assembly and supplemental track number sign when required, complete and attached to the sign supports.

638.7. Payment. Work performed and materials furnished as prescribed by this item, measured as prescribed under "Measurement", shall be paid for at the unit price bid per sign for "Aluminum Railroad Crossbuck Sign Panel Assembly", which price shall be full compensation for furnishing aluminum sign panels; fabrication of the panels; treatment of the

sign panels required by this specification; furnishing and applying reflective sheeting to the sign panels; screening of the message as required by the plans; furnishing the sign post connectors; washing and cleaning of the signs after erection; and furnishing all other materials, labor and incidentals necessary to provide signs completed and attached to the sign supports.

ITEM 640

PLYWOOD SIGNS (Type 0)

640.1. Description. This item shall govern for the composition, application, sampling, testing, measurement and payment of complete, in place plywood overhead guide signs.

640.2. Materials. Copies of Departmental Material Specifications are available from the State Department of Highways and Public Transportation, Materials and Tests Division, 38th and Jackson St., Austin, Texas, 78703.

(1) **Background Materials Choice.** Unless otherwise specified in the plans, the Contractor shall have the option to utilize either Class C or D non-reflective background coatings conforming with Departmental Specification D-9-8500, "Non-reflective Background Coatings". The background coating on all plywood overhead guide signs for any one project, however, shall be of the same generic material for each color.

(2) **Sign Panel Substrate.** Sign panels are usually, but not restricted to, multi-piece plywood panel construction and normally have a green background coating on the face side. The thickness of the plywood panel shall be 5/8 inch or as shown on the plans.

Unless otherwise shown in the plans, no panel shall have a face dimension less than 2'-0". The number of panels per completed sign shall be kept to a minimum. Plywood shall conform with Departmental Specification D-9-7100, "Plywood Sign Blanks".

Sign faces are not acceptable if the variation of the surface in any direction exceeds an amount equal to 1/8 inch per foot of defect in width or height as the case may be. Misalignment between panel faces shall not be greater than 1/16 inch.

(3) **Frames, Stiffeners, Wind Beams, Joint Backing Strips and Fasteners.** Frames, stiffeners, wind beams, joint backing strips and fasteners shall be stainless steel, galvanized steel, or aluminum, in conformance with Departmental Specification D-9-7120, "Sign Hardware". Dissimilar metals shall be so selected or insulated as to prevent corrosion.

(4) **Sign Message.** The sign message shall be of the size, type and color shown on the plans.

Reflectorized removable legend specified on the plans for various signs shall conform with Departmental Specification D-9-8400, "Reflectorized Removable Legend".

When sheet aluminum signs are required as a part of the sign message, they shall be reflectorized and shall conform with the plans in size and shape and with the Item, "Aluminum Signs (Type A)", latest revision thereto. Sheet aluminum signs shall be attached to guide signs by screws or bolts as shown on the plans.

(5) **Sign Support Connections and Hardware.** Sign support connections shall be as shown on the plans or of the Contractor's choice subject to approval by the Engineer.

Connections shall be capable of developing the full strength of the sign.

If not specifically addressed on the plans, all bolts, nuts, washers, lock washers, and other hardware used in making the signs or support connections shall be galvanized steel, stainless steel, or aluminum, in conformance with Departmental Specification D-9-7120, "Sign Hardware".

640.3. Fabrication.

(1) **Working Drawings.** Prior to fabrication, the Contractor shall submit for approval of the Engineer six prints of the working drawings for each plywood overhead guide sign except that when there are two or more signs of identical design, the required print of the working drawings for only one of the signs need be submitted. The working drawings shall show the details of the panels, frames, wind beams, stiffeners, joint backing plates, splices, fasteners, brackets, sign support connections, dichromate-sealed finish for aluminum hardware where required by the plans, and methods of attaching the message to the sign face. The splice bars and wind beams shall be similar to those used by the Department as standards for roadside plywood guide signs. In addition, the working drawing shall show interline spacing of the message in sufficient detail to check against the plans.

(2) **Splicing.** Where required, splicing shall be as shown on working drawings furnished by the Contractor, subject to approval by the Engineer. Bolts or fasteners shall be flush with the face side to provide a smooth, even surface for the application of background coating.

(3) **Fastening.** The pieces of substrate used in making the sign shall be fastened to frames, stiffeners, wind beams, or joint backing strips as shown on the plans or on working drawings furnished by the Contractor subject to approval by the Engineer.

(4) **Panel Preparation.** All preparation of substrates used in making the signs, including cutting and drilling or punching of holes, except holes for attaching removable reflectorized legend, shall be complete prior to degreasing and application of background coating.

(5) Background Coatings. Surface preparation of background substrate prior to application of various background coatings shall be as recommended by the manufacturer of the specific coating and approved by the Engineer.

Application of the various coatings to the substrate shall be according to the manufacturer's recommendations approved by the Engineer.

The acrylic polymer film (Class D) may be factory overlaid or vacuum overlaid by the sign panel fabricator.

640.4. Erection. Completed sign blanks and panels shall be transported, handled and stored in such a manner that corners, edges and faces are not damaged. Any mars, scratches or other damage to the sign faces which are not visible when viewed as outlined in the *MANUAL OF TESTING PROCEDURES* at a distance of fifty (50) feet, shall be acceptable. Finished sign faces shall be stored off the ground in a vertical position and protected from the weather until properly erected.

Prior to erection, all bolt heads and hardware showing on sign faces shall be painted similar in color to the sign face.

640.5. Cleaning. The signs shall be cleaned prior to inspection. The signs shall be washed with a cleaning solution acceptable to the manufacturer of the sign coating to remove all grease, oil, dirt, smears, streaks, finger marks, and other foreign particles prior to shop inspection and prior to final inspection, after erection.

640.6. Sampling and Testing. Sampling and testing will be in accordance with the Department's *MANUAL OF TESTING PROCEDURES* unless otherwise specified herein.

640.7. Measurement. Plywood Signs (Type 0) will be measured by the square foot. Measurement will be made to the nearest 0.01 square foot of the area of the vertical front face of the signs erected as determined from the plans and specifications, with no deductions for rounding off corners. No measurement will be made for area in excess of this minimum area.

640.8. Payment. Payment for Plywood Signs (Type 0) shall be made at the unit price bid per square foot for "Plywood Signs (Type 0)" which price shall be full compensation for furnishing sign panels; fabrication of the panels, any treatment of sign panels that might be required prior to application of the background coating; application of the background coating to the sign panels, the message and attaching to the sign faces; furnishing and fabrication of frames, wind beams, stiffeners, and/or joint backing strips that are required; furnishing all bolts, rivets, screws, fasteners, clamps, brackets and sign support connections; assembling and erecting the signs; washing and cleaning the signs after erection; and all other labor, materials and incidentals necessary to provide signs complete and attached to the sign supports.

ITEM 642

ALUMINUM SIGNS (Type 0)

642.1. Description. This item shall govern for the composition, application, sampling, testing, measurement and payment of complete, in place aluminum overhead guide signs.

642.2. Materials. Copies of Departmental Material Specifications are available from the State Department of Highways and Public Transportation, Materials and Tests Division, 38th and Jackson St., Austin, Texas, 78703.

(1) Background Materials Choice. Unless otherwise specified in the plans, the Contractor shall have the option to utilize either Class A, B, C, or D non-reflective background coatings conforming to Departmental Specification D-9-8500, "Non-reflective Background Coatings". The background coating on all aluminum overhead guide signs for any one project, however, shall be of the same generic material for each color.

(2) Sign Panel Substrate. Sign substrates shall be extruded aluminum and shall meet the requirements specified below. Aluminum for aluminum signs shall conform with the requirements of Departmental Specification D-9-7110, "Aluminum Sign Blanks", or similar alloy approved by the Engineer which is suitable for background coating to meet the specifications contained herein.

Extruded aluminum sign panels shall have a minimum thickness of 0.078 inch. Panels shall be of a 12-inch width except that one 6-inch width panel per sign may be used to obtain the specified overall sign height. Adjacent panels shall be attached to each other by means of bolts. The normal final background coating color is green but may be other colors as shown in the plans.

Sign faces are not acceptable if the variation of the surface in any direction exceeds an amount equal to 1/8 inch per foot of defect in width or height as the case may be. Any vertical or horizontal misalignment between panel faces shall not be greater than 1/16 inch.

(3) Stiffeners, Wind Beams and Fasteners. Stiffeners, wind beams and fasteners shall be stainless steel, galvanized steel, or aluminum, in accordance with Departmental Specification D-9-7120, "Sign Hardware". Dissimilar metals shall be so selected or insulated as to prevent corrosion.

(4) Sign Message. The sign message shall be of the size, type and color shown on the plans.

Reflectorized removable legend specified on the plans for various signs shall conform with Departmental Specification D-9-8400, "Reflectorized Removable Legend".

When sheet aluminum signs are required as a part of the sign message, they shall be reflectorized and shall conform with the plans in size and shape and with the Item, "Aluminum Signs (Type A)", latest revision thereto.

Sheet aluminum signs shall be attached to guide signs by screws or bolts as shown on the plans.

(5) **Sign Support Connections and Hardware.** Sign support connections shall be as shown on the plans or of the Contractor's choice subject to approval by the Engineer.

Connections shall be capable of developing the full strength of the sign.

If not specifically addressed on the plans, all bolts, nuts, washers, lock washers, and other hardware used in making the signs or support connections shall be galvanized steel, stainless steel or aluminum in accordance with Departmental Specification D-9-7120, "Sign Hardware". Dissimilar metals shall be so selected or insulated to prevent corrosion.

642.3. Fabrication.

(1) **Working Drawings.** Prior to fabrication, the Contractor shall submit for approval of the Engineer six prints of the working drawings for each aluminum overhead guide sign except that when there are two or more signs of identical design, the required prints of the working drawings for only one of the signs need be submitted. The working drawings shall show the details of the panels, wind beams, stiffeners, splices, fasteners, brackets, sign support connections, dichromate-sealed finish for aluminum hardware where required by the plans, and methods of attaching the message to the sign face.

In addition, the working drawings shall show interline spacing of the message in sufficient detail to check against the plans. Accompanying the working drawings, the Contractor shall submit the following: the manufacturer's name, the extrusion number, a dimensional cross section of the panel, and the manufacturer's calculated moment of inertia and section moduli for each type of extruded panel the Contractor proposes to use. Extrusions should be designed to the maximum spacing of sign supports shown in the plans.

(2) **Splicing.** Where splicing is required, the splicing shall be done by rivets, bolts, or other fasteners as shown on working drawings furnished by the Contractor subject to approval by the Engineer. Rivets or other fasteners shall be flush with the face side to provide a smooth, even surface for the application of background coating.

(3) **Fastening.** The pieces of substrate used in making the sign shall be fastened to stiffeners or wind beams as shown on the plans or on working drawings furnished by the Contractor subject to approval by the Engineer.

(4) **Panel Preparation.** All preparation of substrates used in making the signs, including cutting and drilling or punching of holes, except holes for attaching removable reflectorized legend, shall be complete prior to degreasing and application of background coating.

(5) **Background Coatings.** Surface preparation of the face side of the background substrate prior to application of various background coatings shall be as recommended by the manufacturer of the specific coating and approved by the Engineer. The face side of aluminum extrusion flanges shall be cleaned and prepared in the same manner as the sign panel face.

Application of the various coatings to the substrate shall be as per manufacturer's recommendations approved by the Engineer.

The acrylic polymer film (Class B) shall be applied to the face and a minimum of 1/2 of the outside face of aluminum extrusion flanges. The film may be factory overlaid or vacuum overlaid by the sign panel fabricator.

Thermoplastic or thermosetting polyester coatings (Class C) shall be shop applied and oven baked with proper pretreatment and primer (when recommended by coating manufacturer). The coating shall be applied to the sign face and outside surfaces of extrusion flanges. The back and/or inside surfaces of the extrusion flanges are not to be coated; unavoidable overspray in these areas may be permissible. Spray application shall be performed by air, airless or electrostatic techniques. Curing shall be performed in a "continuous or batch" oven according to coating manufacturer's recommendations and at no time shall 700 F be exceeded. The dry film thickness of the finish coating shall be a minimum of 0.004 inch and a maximum of 0.012 inch. The coating shall be uniform throughout and free of blemishes, blisters, pinholes, cracks, sags and crazing.

Polyvinylidene Flouride Plastic Thermosetting coatings (Class D) shall be shop-applied and oven-baked with proper pretreatment and primer. The coating shall be applied to the sign face and outside surfaces of extrusion flanges. The back and/or inside surface of extrusion flanges are not to be coated; unavoidable overspray in these areas may be permissible. Spray application shall be performed by air, airless, or electrostatic techniques. Curing shall be performed in a "continuous or batch" oven according to manufacturer's instructions. The dry film thickness of the coating shall be a minimum of one (1) mil (0.2-0.3 mil primer and 0.8 mil minimum of the top coat). The coating shall be uniform throughout and free of blemishes, blisters, sags or crazing.

642.4. Erection. Completed sign blanks and panels shall be transported, handled and stored in such a manner that corners, edges and faces

are not damaged. Any mars, scratches or other damage to the sign faces which are not visible when viewed as outlined in the *MANUAL OF TESTING PROCEDURES* at a distance of fifty (50) feet, shall be acceptable. Finished sign faces shall be stored off the ground in a vertical position and protected from the weather until properly erected.

Prior to erection, all bolt heads and hardware showing on sign faces shall be painted similar in color to the sign face.

642.5. Cleaning. The signs shall be cleaned prior to inspection. The signs shall be washed with a cleaning solution acceptable to the manufacturer of the sign coating to remove all grease, oil, dirt, smears, streaks, finger marks, and other foreign particles prior to shop inspection and prior to final inspection, after erection.

642.6. Sampling and Testing. Sampling and testing will be in accordance with the Department's *MANUAL OF TESTING PROCEDURES*, unless otherwise specified herein.

642.7. Measurement. Aluminum Signs (Type 0) will be measured by the square foot. Measurement will be made to the nearest 0.01 square foot of the area of the vertical front face of the signs erected as determined from the plans and specifications, with no deductions for rounding off corners, and no measurement will be made for area in excess of this minimum area.

642.8. Payment. Payment for Aluminum Signs (Type 0) shall be made at the unit price bid per square foot for "Aluminum Signs (Type 0)" which price shall be full compensation for furnishing sign panels; fabrication of the panels, any treatment of sign panels that might be required prior to application of the background coating; application of the background coating to the sign panels, the messages attaching to the sign faces; furnishing wind beams and stiffeners that are required, furnishing all bolts, rivets, screws, fasteners, clamps, brackets, and sign support connections; assembling and erecting the signs; washing and cleaning the signs after erection; and all other labor, materials and incidentals necessary to provide signs complete and attached to the sign supports.

ITEM 644

CONFORMABLE SHEETING REFLECTORIZED SIGNS

644.1. Description. This item shall govern for the furnishing and installation of signs made solely of reflective sheeting which has a pressure-sensitive adhesive backing that allows the sign to be affixed to such surfaces as are shown in the plans.

644.2. Materials. Copies of Departmental Material Specifications are available from the State Department of Highways and Public Transportation, Materials and Tests Division, 38th and Jackson St., Austin, Texas, 78703.

The reflective sheeting shall be capable of being applied to and used on rough, porous surfaces such as concrete, asphalt, steel, brick, and wood for the purpose of posting overhead clearances for bridges. The material must be a product suitable for use in these exposure conditions and must conform to Departmental Specification D-9-8300, "Flat Surface Reflective Sheeting", Type D.

644.3. Fabrication. The message as shown on the plans shall be screened on the reflective sheeting in accordance with the sheeting producer's recommended practices utilizing screen inks approved by the Department. Screen inks shall conform to Departmental Specification D-9-8300, "Flat Surface Reflective Sheeting".

644.4. Installation. Signs will be installed as shown on the plans or as directed by the Engineer. Before application, the surface must be prepared to the satisfaction of the Engineer in accordance with the manufacturer's instructions.

Whenever the sign is applied over expansion joints, deep cracks or seams, it is to be slit to avoid tearing or lifting. Any applied sign that has wrinkles, air pockets, ragged edges, tears or bends shall be removed and replaced at the sole cost of the Contractor. The installation as a whole shall be carried out in conformance with requirements herein stated and with details and dimensions shown in the plans. Upon completion, the work shall present a neat and workmanlike appearance.

644.5. Sampling and Testing. Sampling and testing will be in accordance with the Department's *MANUAL OF TESTING PROCEDURES.*

644.6. Measurement. Conformable Sheeting Reflectorized Signs will be measured to the nearest 0.01 square foot of material in place. No deductions for rounding off sign radii corners will be made.

644.7. Payment. The materials furnished and work performed as prescribed by this item, measured as provided under "Measurement" shall be paid for at the unit price bid for "Conformable Sheeting Reflectorized Signs" which price shall be full compensation for furnishing all labor, tools, equipment, and incidentals necessary to fabricate and install the signs and to otherwise complete the work.

ITEM 646

ROADSIDE TRAFFIC SIGN SUPPORTS (STEEL PIPE)

646.1. Description. This item shall govern for supports of steel pipe which are used for traffic signs normally erected at a minimum height of seven (7) feet from the top of the pavement edge to the bottom of the lowest sign on the support.

646.2. Materials. The sign supports shall be made from new galvanized steel pipe. The size and specifications for the pipe and galvanizing requirements shall be as shown on the plans. Galvanizing shall be done after fabrication and punching or drilling of any holes that may be permitted by the plans or by the Engineer.

646.3. Construction Methods. The length of each post for each traffic sign shown on the plans shall be verified by the Contractor before ordering in order to meet the existing field conditions and to conform with sign-mounting heights shown on the plans. Should it be necessary to field cut a steel post to shorten it, the cut end shall be placed in the concrete foundation.

Pipe sign supports shall be built up as required by the plans. Any part of the pipe which has bare metal exposed or from which the galvanizing has been knocked or chipped off down to bare metal in fabrication, transit, or erection shall be repaired, in accordance with the manufacturer's recommendations, by application of galvanizing repair compounds meeting Federal Specification O-G-93 (Stick only) or zinc dust-zinc oxide meeting Federal Specification TT-P-641b.

The sign supports shall be located as shown on the plans, except that the Engineer may shift a sign support where necessary to secure a more desirable location. The Engineer will stake all sign support locations.

Sign supports shall be erected at the direction of the Engineer so that the sign faces will normally be vertical and, if necessary, angled sufficiently away from perpendicular to the roadway when attached to the supports in order to prevent specular glare. If specular glare is apparent on the mounted signs under nighttime inspection, corrective adjustments in the sign orientation shall be made at the direction of the Engineer.

The multi-section pipe post supports may, at the Contractor's option, be cast in the concrete foundation with or without the upper post section attached. However, if installation is made with the upper post section attached, the support shall not be exposed to traffic until the sign is properly affixed.

The pipe stub post shall be set carefully in the foundation holes, and if directed by the Engineer, shall be held in place by an approved form or template before the concrete for the foundation is placed. The forms and templates, if used, shall not be removed until the concrete has aged at least twenty-four (24) hours. No sign shall be attached to the posts until the concrete has aged at least seven (7) curing days or until otherwise permitted by the Engineer. A curing day shall be as defined in the Item, "Concrete Structures".

Milepost marker posts, in material other than rock, shall be driven to the depth shown on the plans. A suitable cap shall be provided and after driving, the top of the posts shall have substantially the same cross sectional dimensions as the body of the posts. Battered heads will not be permitted, and any posts bent or otherwise damaged to the extent that they are, in the opinion of the Engineer, unfit on the finished work, shall be removed from the site and replaced by the Contractor at his own expense.

If rock is encountered at a depth less than the minimum depth shown on the plans, the holes for the milepost marker posts shall be drilled not less than six (6) inches in diameter and to the depth shown on the plans. The post shall be vertically aligned in the center of the hole which shall then be backfilled with a suitable material thoroughly tamped in four inch layers.

Springing or raking of posts to secure proper alignment will not be permitted.

The Contractor shall be responsible for the correctness of shop fit and field connections. Post lengths shall be approved by the Engineer prior to the fabrication of any support.

646.4. Foundations. Foundations for all pipe posts, except the milepost marker post, shall conform with the Item, "Foundation for Traffic Signs". The milepost marker post shall be driven or drilled and backfilled as may be required. The milepost marker post shall not be set in concrete; it shall not be considered as having a foundation.

646.5. Measurement. The supports will be measured by the linear foot for the various sizes of pipe as erected. Measurement of lengths will be made along the center line from end of pipe to end of pipe, from end of pipe to center line of cross pipe of junction and from center of junction to center of junction.

646.6. Payment. Payment for the support shall be made at the unit price bid per linear foot for the various sizes of "Roadside Traffic Sign Supports (Steel Pipe)", which payment shall be full compensation for furnishing, fabricating, galvanizing and erecting the posts, including the driving or drilling and backfilling of the milepost marker post and all other details and incidentals, except foundations, necessary to provide the sign mounts complete and erected in place ready for the attachment of the sign(s).

ITEM 648

ROADSIDE TRAFFIC SIGN SUPPORTS
(Structural Steel)

648.1. Description. This item shall govern for supports of structural steel which are used for traffic signs normally erected at a minimum height of seven (7) feet from the top of the pavement edge to the bottom of the sign or the bottom of the sign lighting fixtures, when such fixtures are used, unless shown otherwise on the plans.

648.2. Materials. The sign supports shall be structural steel S and W shape I-beam posts as shown on the plans and shall conform to the requirements of the Item, "Metal for Structures".

All steel posts, bolts, nuts, washers (except shims) and plates (including cast-iron plates) shall be galvanized after fabrication in accordance with the plans. The metal shall be thoroughly cleaned and pickled before galvanizing. All holes in steel posts that may be permitted by the plans or by the Engineer shall be punched or drilled before the posts are galvanized.

The length of each post for each traffic sign shown on the plans shall be verified by the Contractor before ordering in order to meet the existing field conditions and to conform with sign mounting heights shown on the plans. Should it be necessary to field cut a steel post to shorten it, except those having base connections, the cut end shall be placed in the concrete foundation.

Any parts of steel posts which have bare metal exposed or from which galvanizing has been knocked or chipped off down to bare metal in fabrication, transit, erection or field alteration shall be repaired, in accordance with the manufacturer's recommendations, by application of galvanizing repair compounds meeting Federal Specification O-G-93 (Stick Only) or zinc dust-zinc oxide meeting Federal Specification TT-P-641b.

648.3. Fabrication. Fabrication shall be in accordance with the Item, "Steel Structures".

648.4. Construction Methods. The sign supports shall be located as shown on the plans, except that the Engineer may shift a sign support where necessary to secure a more desirable location. The Engineer will stake all sign support locations.

Sign supports shall be erected at the direction of the Engineer so that the sign faces will normally be vertical and if necessary, angled sufficiently away from perpendicular to the roadway when attached to the supports in order to prevent specular glare. If specular glare is apparent on the mounted signs under nighttime inspection, corrective adjustments in the sign orientation shall be made at the direction of the Engineer.

The multi-section steel supports for roadside traffic signs may, at the Contractor's option, be cast in the concrete foundation with or without the upper post section attached. However, if installation is made with the upper post section attached, the support shall not be exposed to traffic until the sign panel is properly affixed. The stub post sections for assembled supports shall be set carefully in the foundation holes and, if directed by the Engineer, shall be held in place by an approved form or template before the concrete for the foundation is placed. The stub post sections shall be so positioned that the projection above finished grade is as shown on the plans with the ear plates so positioned that when the upper post section is attached, using shims as required, the upper post section is vertical and plumb and properly oriented with the roadway. The forms and templates, if used, shall not be removed until the concrete has aged at least twenty-four (24) hours. No sign shall be attached to the support until the concrete has aged at least seven (7) days or until otherwise permitted by the Engineer. A curing day shall be defined as in the Item, "Concrete Structures".

The upper posts shall be attached to the stub post sections by bolts as shown on the plans. Care shall be exercised to insure that one flat washer on each bolt separates the matching ear plates of the upper and lower sections and a flat washer is positioned under the head and the nut of each bolt. With all supporting form work removed from the posts, the bolts shall be tightened following exactly the procedure and tightening to the torque values set forth in the plans.

Springing or raking of posts to secure proper alignment will not be permitted.

The Contractor shall be responsible for the correctness of shop fit and field connections. Post lengths shall be approved by the Engineer prior to the fabrication of any support.

648.5. **Foundations.** Foundations shall conform with the Item, "Foundations for Traffic Signs".

648.6. **Measurement.** The supports will be measured by the pound for the various sizes of structural steel beams as fabricated and erected. Measurement will include ear plates, bolts, nuts, washers, shims and cast-iron plates as required by the plans; no weight will be allowed for zinc applied to the steel in the process of galvanizing.

648.7. **Payment.** Payment for the supports shall be made at the unit price bid per pound for "Roadside Traffic Sign Supports (Structural Steel)", which payment shall be full compensation for furnishing, fabricating, and erecting the posts, including ear plates, bolts, nuts, washers, shims and cast-iron plates as required by the plans, and including galvanizing and all other details and incidentals, except foundations, necessary to provide the sign mounts complete and erected in place ready for the attachment of the sign(s).

ITEM 650

OVERHEAD SIGN SUPPORTS

650.1. Description.

(1) **General.** This item shall govern for the furnishing of overhead sign supports designed by the Department to provide a normal minimum clearance of seventeen feet, six inches (17'-6") between the highest point on the pavement and the lowest sign or the bottom of the lowest lighting fixture when such fixtures are used.

(2) **Types.** Overhead sign supports shall include the following types:

(a) Braced Tee

(b) Balanced Tee

(c) Bridge

(d) Cantilever

(e) Combined Bridge and Cantilever

For further identification of the types of overhead sign supports, see standard designs incorporated in the plans.

650.2. Shop Drawings. Prior to fabrication of sign supports, handrails, walkways, etc., approval by the Department of shop drawings shall be required.

Seven prints of the shop drawings showing the fabrication and erection details for each support shall be submitted to the Bridge Engineer, State Department of Highways and Public Transportation, Austin, Texas 78701.

The drawings shall be prepared on sheets 22 x 36 inches in size, with 1-1/2 inch left margin and other margins of 1/2 inch.

Each sheet shall have a title in the lower right corner which includes the sheet index data shown in the lower right corner of the project plans, names of the Fabricator and Contractor, and sheet numbering.

Drawings for only one support need be submitted for two or more supports in the submittal which are of identical design and dimensions.

The Contractor shall be responsible for the correctness and completeness of the drawings and for shop fit and field connections, even though the drawings have been approved by the Department.

650.3. Materials.

(1) **Support.** Overhead sign supports shall be of steel as shown on the plan sheets. Unless specified otherwise on the plan sheets, all steel shall conform with the Item, "Metal for Structures".

(2) **Brackets, Clamps, Bolts and Other Hardware.** Any brackets, clamps, bolts and other hardware used in fastening signs to the overhead sign supports shall be galvanized steel, stainless steel or aluminum, subject to the condition that dissimilar metals shall be so selected or insulated as to prevent corrosion.

(3) **Foundations.** For specifications governing foundations, see the Item, "Foundations for Traffic Signs".

(4) **Galvanization.** All parts and members of overhead sign supports that are fabricated from steel shall be galvanized in conformance with the Item, "Metal for Structures". Any holes in steel parts or members that may be permitted by the plans or by the Engineer shall be punched or drilled before the parts or members are galvanized. Any steel part or member from which galvanizing has been damaged in fabrication, in transit or in erection, and any steel part or member welded after galvanizing shall be repaired, in accordance with the manufacturer's recommendations, by application of galvanizing repair compounds meeting Federal Specification O-G-93 (Stick Only) or zinc dust-zinc oxide meeting Federal Specification TT-P-691b. Other zinc-rich coatings may be used for repair with the approval of the Engineer.

(5) **Foundation Anchor Bolts.** Steel for anchor bolts shall conform to ASTM Designation: A 36 or to other specifications for steel with a higher guaranteed yield point or yield stress as required by the plans or as elected by the Contractor. For such steel the minimum required elongation in a 2″ gage length on a standard 1/2″ round machined specimen shall not be less than 16% and tests will be required for each heat to verify the elongation and yield point. The amount of the yield stress used in the calculation of allowable anchor bolt stresses shall not exceed 55,000 psi. The embedded end of each foundation anchor bolt shall include a standard head or a standard nut that is tack-welded to the bolt on the side of the nut nearest the embedded end of the bolt. The length of anchor bolts shall be sufficient to allow embedment of 20 diameters from the top of sound concrete to the upper face of the nut or head.

650.4. Construction Methods.

(1) **Fabrication.** Fabrication of overhead sign supports shall conform with the Item, "Steel Structures", SDHPT Bulletin C-5, except that materials shall conform to requirements stated herein.

Any tubular member used in the sign support structure shall have both ends open.

(2) **Location and Positioning.** The sign supports shall be located as

shown on the plans, except that the Engineer may shift a support where necessary to secure a more desirable location. The Engineer shall stake all sign support locations.

The sign supports shall be so erected that the sign faces will normally be vertical when attached to the supports.

(3) **Anchor Bolt Setting.** Anchor bolts shall be held rigidly in position during placement of surrounding concrete using steel templates top and bottom, which shall remain in place. The templates shall clear the drilled shaft reinforcing and not interfere with concrete placement.

(4) **Erection of Posts or Towers.** When the posts or towers are placed on the concrete foundation, the nuts supporting the post or tower base plates shall be adjusted to bring the bottom of the base plate level with the top of the cap foundation and to bring the post or tower to a true vertical plane. The nuts on top of the base plate shall then be tightened securely. Springing or raking of posts or towers will not be permitted to make sign bridges or trusses fit between the posts or towers.

After the base plates of the post or tower are at their proper elevation and the post or tower is in a true vertical plane, a layer of lean Portland cement grout shall be worked thoroughly in the area to fill the void between the top of the concrete foundation and the bottom of the post or tower base plates and around the anchor bolts. The grout shall not cover any portion of the top of the concrete foundation beyond the edges of the base plates except for a bevel of approximately 12 to 12 extending from the bottom of the base plate to the top of the foundation. Grout shall be made from one part Portland cement and four parts of clean field or mortar sand, all of which passes a No. 10 sieve.

650.5. **Measurement.** Overhead Sign Supports will be measured as each unit complete in place, excluding foundations, of the various types (Braced Tee, Balanced Tee, Bridge, Cantilever, Bridge/Cantilever) and span lengths.

650.6. **Payment.** Payment for Overhead Sign Supports shall be made at the unit price bid per each for "Overhead Sign Support" of the various types (Braced Tee, Balanced Tee, Bridge, Cantilever, Bridge/Cantilever) and span lengths, which payment shall be full compensation for furnishing, fabricating and erecting the Overhead Sign Supports; for furnishing and placing anchor bolts, nuts and washers; for furnishing and placing the electrical conduit in the footing; and for all other details and incidentals necessary to provide an Overhead Sign Support in accordance with the specifications, plans or approved working drawings, complete in place and ready for the attachment of the sign(s).

ITEM 652

HIGHWAY SIGN LIGHTING FIXTURES

652.1. **Description.** This item shall govern for the furnishing and erection of highway sign lighting fixtures of the types specified in accordance with locations, spacings and dimensions shown on the plans.

652.2. **Materials.** All materials furnished, assembled, fabricated or installed under this item shall be new, unless otherwise indicated, and in strict accordance with the details shown on the plans and in compliance with the National Electrical Code.

652.3. **Construction Methods.** The installation of the highway sign lighting fixtures shall be carried out in conformance with the details shown on the plans. Upon completion of the work, each assembly shall present a neat and workmanlike finished appearance.

652.4. **Measurement.** The Highway Sign Lighting Fixtures will be measured as each unit of each type erected, complete in place.

652.5. **Payment.** Work performed and materials furnished as prescribed in this item, measured as provided under "Measurement", shall be paid for at the unit price bid for each "Highway Sign Lighting Fixture", of the type specified, which payment shall be full compensation for furnishing, installing and testing all fixtures complete with lamps, ballasts, ballast boxes, all conduit required for installing the fixtures, conductors between the fixtures and the base of the tower or post supporting the sign structure, brackets for mounting the fixtures on the sign structure, hardware, internal connections and for furnishing all labor, tools, equipment and incidentals necessary to provide the fixture complete in place and ready for operation.

ITEM 654

SIGN WALKWAY

654.1. **Description.**

(1) **General.** This item shall govern for sign walkways which shall consist of grating attached to supporting members and which shall be provided with a fold-down type handrail. Walkways shall be attached to and supported by the sign lighting brackets.

(2) **Design.** Sign walkways shall be of steel as shown on the plans.

Sign walkways shall be designed in accordance with the requirements of "*SPECIFICATIONS FOR THE DESIGN AND CONSTRUCTION OF STRUCTURAL SUPPORTS FOR HIGHWAY SIGNS*", published by the American Association of State Highway and Transportation Officials.

The handrail shall have such minimum safe live load capacity as to support a concentrated load of 150 pounds applied horizontally in any direction at the top of the top rail when the handrail is in a raised position.

654.2. **Materials.** Dissimilar metals in contact shall be so treated or insulated as to prevent corrosion.

The grating shall be open-type and shall have a skid resistant surface. The width shall be 24 inches with minor variations permitted to accommodate the manufacturer's pattern.

654.3. **Construction Methods.** Fabrication shall be in accordance with the Item, "Steel Structures". Steel parts shall be galvanized after fabrication in accordance with the Item, "Metal for Structures".

Assemblies and pieces shall be plainly marked to show their location in the finished structure. The parts shall be bundled for shipment to minimize risk of damage in transit.

Care shall be exercised in transportation, storage and erection to prevent damage. Any damage to galvanizing down to bare metal or any exposed bare metal shall be repaired, in accordance with the manufacturer's recommendations, by application of galvanizing repair compounds meeting Federal Specification O-G-93 (Stick Only) or zinc dust-zinc oxide meeting Federal Specification TT-P-641b. Other zinc-rich coatings may be used for repair with the approval of the Engineer.

654.4. **Measurement.** Sign Walkways will be measured by the linear foot of walkway in place.

654.5. **Payment.** Payment for Sign Walkways shall be made at the unit price bid per linear foot for "Sign Walkways", which payment shall be full compensation for furnishing, fabricating and erecting the walkway, including the railing, railing connections, latches, plates, bolts, nuts, washers and all incidentals necessary, including galvanizing, to provide a completed walkway in place as shown on the project plans and in compliance with the specifications.

ITEM 656

FOUNDATIONS FOR TRAFFIC SIGNS

656.1. **Description.** This item shall govern for the construction of concrete foundations for traffic signs.

656.2. **Materials.** All concrete materials shall be in accordance with the requirements of the Item, "Concrete for Structures", and the additional requirements herein. "Class A" concrete will be used with the exception that "Class B" may be used for roadside traffic sign supports. Materials for drilled shaft foundations shall be in accordance with the Item, "Drilled Shaft Foundations".

Reinforcing steel shall conform to the requirements of the Item, "Reinforcing Steel". The sizes and dimensions shall be as shown on the plans.

656.3. Construction Methods.

(1) **Drilled Shaft Foundations.** Drilled shaft foundation construction shall be in accordance with the Item, "Drilled Shaft Foundations".

(2) **Excavation.** All excavation required shall be done through whatever substances encountered, and to the dimensions and elevation shown on the plans or required by the site conditions as directed by the Engineer. This excavation shall be done in accordance with the Item, "Structural Excavation", except that it will not be measured for payment and it will be considered as subsidiary to the respective sign supports.

(3) **Reinforcing Steel.** Reinforcing steel shall be positioned as shown on the plans and in conformance with the Item, "Reinforcing Steel", except that it will not be measured for payment but will be considered as subsidiary to the respective sign supports.

(4) **Concrete.** The work shall be performed in conformance with the provisions of the Item, "Concrete Structures", and with the requirements herein.

Any posts to be imbedded in drilled shaft foundations shall be set carefully in the foundation holes, and if directed by the Engineer, shall be held in place by an approved template before the concrete for the foundation is placed. The forms and templates, if used, shall not be removed until the concrete has aged a minimum of 24 hours. Springing or raking of posts to secure proper alignment will not be permitted.

Electrical conduit where required, and anchor bolts of the size, length and number as shown on the plans shall be positioned before the concrete is placed. Anchor bolt groups shall be set and maintained in position with a template during the placement of that portion of concrete into which anchor bolts are embedded. Care shall be taken to obtain the orientation of the anchor bolts and spacing of the anchor bolt groups as shown on the plans.

All parts of the concrete foundations extending above the natural or finished ground line shall be given an ordinary surface finish in accordance with the Item, "Concrete Structures". If a higher type finish is specified in the plans, it shall be in accordance with the Item, "Surface Finishes for Concrete".

No structure or post shall be erected on a concrete foundation nor shall any traffic sign be attached to a sign post embedded in concrete until the concrete has aged at least seven curing days or until otherwise permitted by the Engineer.

(5) **Backfilling.** Backfilling shall be in accordance with the requirements of the Item, "Structural Excavation", and the additional requirements herein.

All backfilling shall be completed prior to the erection of any sign on the structure.

Where riprap, embankment protection or surfacing is removed for placing foundations for traffic signs, it shall be replaced with like material as directed by the Engineer.

656.4. Measurement. Acceptable drilled shaft foundations in place, will be measured as specified in the Item, "Drilled Shaft Foundations".

656.5. Payment. Non-reinforced drilled shaft foundations and reinforced drilled shaft foundations, when measured as specified above, shall be paid for in accordance with the Item, "Drilled Shaft Foundations".

The foregoing unit prices shall be full compensation for making all excavations; doing any necessary pumping; furnishing and placing all concrete and reinforcing steel; furnishing, placing and removing all forms; finishing and curing concrete; placing and compacting all backfill; replacing riprap, embankment protection and/or surfacing which has been removed; and furnishing all tools, labor, equipment and incidentals, including clean-up, necessary to complete the work.

ITEM 658

DELINEATORS AND OBJECT MARKERS

658.1. Description. This item shall govern for the furnishing and mounting of delineators and object markers in conformity with details shown in the plans and as described herein.

658.2. Materials. Copies of Departmental Material Specifications are available from the State Department of Highways and Public Transportation, Materials and Tests Division, 38th and Jackson St., Austin, Texas, 78703.

(1) Delineators. Delineators shall consist of one or two reflector units of the color specified for the various types as shown on the plans.

(2) Object Markers. Object markers shall consist of reflector units or reflectorized panels of the color specified for the various types as shown on the plans.

(3) Supply. All reflector units supplied to the project shall be of the same type and manufacture.

658.3. Physical Requirements.

(1) Type (a) Reflector Units. The sheeting for Type (a) reflector units shall be the high specific intensity type and shall conform to Departmental Specification, D-9-8300, "Flat Surface Reflective Sheeting", Type C. Re-

flective sheeting shall be applied to 0.063 inch aluminum blanks conforming with the dimensions shown on the plans. The mounting hardware shall consist of all bolts, nuts, plain washers, lock washers, fastening plates and brackets, as required by the plans or approved by the Engineer

(2) **Type (b) Reflector Units.** Centermount acrylic plastic prismatic reflector units shall meet the requirements of Departmental Specification D-9-8600, "Delineators and Object Markers".

658.4. **Construction Methods.** Delineators and object markers shall be mounted on supports in accordance with the plans or as directed by the Engineer.

658.5. **Sampling and Testing.** Sampling and testing will be in accordance with the Department's *MANUAL OF TESTING PROCEDURES.*

658.6. **Measurement.** Delineators and Object Markers will be measured as each of the several types as shown in the plans completely assembled and mounted on the support.

658.7. **Payment.** Work performed and materials furnished as prescribed by this specification, measured as provided under "Measurement", shall be paid for at the unit price bid for "Delineators and Object Markers" of the type, color and reflector unit specified, which price shall be full compensation for furnishing, fabricating, and installing on the support the delineators and/or object markers as shown on the plans and as specified herein, including housing, back plates, frames, reflector units, fastening plates or brackets where required and all bolts, nuts and washers.

ITEM 660

WINGED CHANNEL POSTS

660.1. **Description.** This item shall govern for the furnishing and erecting of galvanized winged channel posts for delineators, object markers, and milepost markers in accordance with the lines, grades, details and dimensions shown on the plans or as directed by the Engineer.

660.2. **Materials.** Copies of Departmental Material Specifications are available from the State Department of Highways and Public Transportation, Materials and Tests Division, 38th and Jackson St., Austin, Texas, 78703.

Winged channel posts shall conform to Departmental Specification D-9-7130, "Winged Channel Posts".

660.3. **Construction Methods.** Posts shall be erected so that the delineators or markers which are attached to them will be at elevations called for on the plans. Posts shall be true to line and grade and vertical.

In material other than rock, the posts shall be driven to the depth shown on the plans. A suitable cap shall be provided so that after driving, the top of the posts shall have substantially the same cross sectional dimensions as the body of the posts. Battered heads will not be permitted, and any posts bent or otherwise damaged to the extent that, in the opinion of the Engineer, they are unfit on the finished work, shall be removed from the site and replaced by the Contractor at his own expense.

If rock is encountered at a depth less than the minimum embedment depth shown on the plans, holes for the posts shall be drilled not less than six inches in diameter and to the depth shown on the plans. The posts shall be vertically aligned in the center of the hole that shall then be backfilled with a suitable material thoroughly tamped in four inch layers.

660.4. Measurement. Winged Channel Posts will be measured as each post of the various specified lengths and weights (lbs/ft) complete in place.

660.5. Payment. The work performed and material furnished as prescribed by this item, measured as provided under "Measurement", shall be paid for at the unit price bid for "Winged Channel Posts" of the stated length and weight (lbs/ft) which price shall be full compensation for furnishing, galvanizing, driving the posts or drilling holes and backfilling and for all other details and incidentals necessary to provide the posts complete and erected in place ready for the attachment of delineators, object markers, or milepost markers.

ITEM 662

CONSTRUCTION PAVEMENT MARKINGS

662.1. Description. This item shall govern for the placement, maintenance, and removal of pavement markings which are required during construction operations.

662.2. Materials. The material used in placement of standard markings in construction areas shall be distinctively visible when dry from a minimum distance of 300 feet in daylight conditions and from a minimum of 160 feet when illuminated by automobile low-beam headlights at night. Visibilities are to be measured when viewed from an automobile traveling on the roadway.

The day color as well as the nighttime reflected color of the markings shall be distinctly white or yellow as required and shall conform to the color requirements of all federal regulations. The markings shall exhibit uniform retroreflective characteristics.

Should the Contractor elect to use paint and glass beads for construction pavement markings, materials may be purchased from the Department if so indicated in the plans. The Contractor shall place his order for mater-

ials through the Project Engineer 15 days before materials are needed. The Contractor shall not use any materials furnished by the Department on any work which is not required by and which does not constitute a part of this contract.

662.3. **Placement and Maintenance.** Roadways which are closed to traffic during construction should be marked with standard pavement markings in accordance with the Texas MUTCD before traffic is allowed on the facility. Roadways which remain open to traffic while construction operations are in progress should be marked at the end of each day's work with standard markings in accordance with the Texas MUTCD in order to replace those markings that may have been covered or obliterated during the day's operation.

If it is not possible or practical to place standard markings as described above, markings in accordance with the provisions of the Item, "Abbreviated Pavement Markings", (except Measurement and Payment) shall be placed at the end of each day's work on surfaces other than seal coats. Traffic will be permitted on seal coat surfaces for a period of 72 hours before abbreviated markings are required; if, however, the Contractor intends to place the standard markings on seal coat surfaces within the 72-hour period, abbreviated markings need not be used. The use of abbreviated markings will be allowed for a period not to exceed two weeks at which time standard markings must be installed. The Contractor shall be responsible for the maintenance of abbreviated markings to the satisfaction of the Engineer.

The Contractor shall exercise diligence in placing the standard markings and shall maintain them as long as they are required for traffic operations through the construction area. Standard markings which, in the opinion of the Engineer, fail to meet the requirements of this specification shall be replaced as directed by the Engineer at the sole expense of the Contractor.

662.4. **Removal.** When construction operations will require the alteration of any pavement marking, the Contractor shall provide for the covering or complete obliteration of any conflicting markings to the satisfaction of the Engineer. Prior to the placement of any marking material that will require subsequent removal during construction, the Contractor will demonstrate the removability of the material to the satisfaction of the Engineer. Removal of the markings shall leave no discernible evidence of the marking ever having been in place. Payment for marking removal will be considered subsidiary to the Item, "Barricades, Signs and Traffic Handling", and will not be made directly.

662.5. **Measurement.** Construction Pavement Markings will be measured by any unit as specified in the plans, complete and in place.

662.6. **Payment.** The work performed and materials furnished as prescribed by this item, measured as provided under "Measurement", shall be

paid for at the unit price bid for "Construction Pavement Markings (Removable)" and/or "(Non-removable)" and/or "(Abbreviated)" of the various sizes, shapes, and colors as specified, which price shall be full compensation for furnishing all materials, labor, tools, equipment and incidentals necessary to place and maintain the markings as required.

ITEM 664

ABBREVIATED PAVEMENT MARKINGS

664.1. Description. This item shall govern for the placement, maintenance and removal of abbreviated markings which are to be placed on all roadways that are open to traffic and that do not have standard markings in place.

664.2. General Requirements. The pavement-marking material shall consist of an adhesive-backed reflective tape which can be applied to the pavement, or, as an alternate, a 12 to 15 mil wet-film application of paint with glass beads. Markings shall be of good appearance, have straight, unbroken edges and have a color that complies with all federal regulations.

664.3. Dimensions. Pavement markings shall be a minimum of 3-7/8 inches wide. Lengths and spacings will be as specified.

664.4. Color. The markings, as well as retroreflected light from the markings, shall be white or yellow as called for in the plans.

664.5. Visibility. When dry, the pavement markings (during daylight hours) shall be distinctively visible for a minimum of 300 feet unless sight distance is restricted by geometric roadway features.

When dry, the pavement markings (when illuminated by automobile low-beam headlights at night) shall be distinctively visible for a minimum of 160 feet unless sight distance is restricted by geometric roadway features.

The above day and night visibility requirements shall be met when viewed from an automobile traveling on the roadway.

664.6. Placement and Maintenance. At sunrise and sunset of each day, abbreviated markings meeting all specification requirements shall be in place on all roadways on which traffic is allowed and where suitable standard pavement marking is not in place. The transverse location of the line(s) formed by the markings shall be as determined by the Engineer.

Unless otherwise shown on the plans, the abbreviated markings shall be placed as follows:

Condition	Spacing	Length of Stripe
Straight	80 feet (approx.)	24 inch
Curve $> 2°$	40 feet (maximum)	24 inch
Curve $< 2°$	80 feet (maximum)	24 inch

The spacing of stripes may be modified by the Engineer. However, the maximum spacing specified above shall not be exceeded in any case.

The Contractor will be responsible for maintaining the abbreviated pavement markings for a maximum period of two weeks. If, however, the Contractor is also responsible for placing the standard pavement markings, the Contractor shall be responsible for maintaining the abbreviated pavement markings until standard pavement markings are in place.

664.7. Removal. Where removal is required, it will be accomplished as called for in the plans. Paint and beads should not be used where removal of abbreviated pavement markings may be required.

664.8. Measurement. Abbreviated Pavement Markings will be measured by the linear foot of markings placed.

664.9. Payment. The work performed and material furnished as prescribed by this item, measured as provided under "Measurement", shall be paid for at the unit price bid for "Abbreviated Pavement Markings", which price shall be full compensation for furnishing all materials, labor, tools, equipment and incidentals necessary to place the markings and for maintaining and/or removing the markings as required.

ITEM 666

THERMOPLASTIC PAVEMENT MARKINGS

666.1. Description. This item shall govern for the materials, composition, application, sampling, testing, measurement and payment of thermoplastic pavement markings of the color, length, thickness and width as specified in the plans and in accordance with the lines established by the Engineer.

666.2. General. Markings to be placed may be on roadways either free of traffic or open to traffic. On roadways already open to traffic, the markings shall be placed under traffic conditions that exist with a minimum of interference to the operation of the facility. Traffic control shall be as shown in the plans or as approved by the Engineer. All markings placed under traffic shall be protected from traffic damage and disfigurement.

When required by the Engineer, prior to beginning work on the thermoplastic pavement markings, a conference shall be held between the representatives of the Contractor and the Engineer to set up more completely the sequence of work to be followed and the estimated progress schedule.

666.3. General Characteristics. Pavement marking material shall be a product especially compounded for traffic markings. Each container shall

be clearly and adequately marked to indicate the color, weight, type of material, and lot or batch number (a lot or batch shall be considered as each individual mix or blend that produces a finished product ready for use).

When placed on the roadway, the markings shall not be slippery when wet, lift from pavement under normal weather conditions, nor exhibit a tacky, exposed surface. Cold ductility of the material shall permit normal road surface expansion and contraction without chipping or cracking.

The markings shall retain their original color, dimensions and placement under normal traffic conditions at road surface temperatures of 158 F and below.

When applied 1/8 inch thick, the setting to traffic time shall not exceed a characteristic straight-line curve, the lower limit of which is four minutes at 59 F road surface temperature, and the upper limit of which is ten minutes at 90 F road surface temperature. Both temperatures are to be measured at a maximum relative humidity of 90% and according to Texas Test Method Tex-829-B.

The markings shall essentially have a uniform cross-section. The density and quality of markings shall be uniform throughout their thickness. The applied markings shall be 95% free of holes and voids, and free of blisters for a minimum of 60 days after application.

The markings in place on the roadway shall be completely reflectorized both internally and externally. The marking, when observed in accordance with Texas Test Method Tex-828-B, shall exhibit uniform retrodirective reflectance.

666.4. Material Requirements. Copies of Departmental Material Specifications are available from the State Department of Highways and Public Transportation, Materials and Tests Division, 38th and Jackson St., Austin, Texas, 78703.

Materials shall conform to Departmental Specifications D-9-8220, "Thermoplastic, Hot Applied", and D-9-8290, "Glass Traffic Beads".

666.5. Equipment. The pavement marking material may be either spray applied or extruded hot to the pavement surface unless application method is specified on the plans.

The equipment shall be constructed to provide continuous mixing and agitation of the material. The shaping die or spray gun shall be equipped with a cut-off device remotely controlled to provide clean, square, marking ends and to provide a method for applying broken lines. The use of pans, aprons, or similar appliances which the die overruns shall not be permitted under this specification.

Equipment used to place four inch solid or broken line shall be capable of placing a minimum of 60,000 linear feet of marking per working day. Equipment used for placing markings in widths of other than four inches shall have capabilities similar to four-inch marking equipment. Equipment shall be maintained in satisfactory operating condition. Equipment shall be considered in unsatisfactory working condition if it fails to have an average hourly placement rate of 7,000 linear feet of acceptable four-inch solid or broken lines over any five consecutive working days of seven hours or more due to equipment malfunction. Upon notification by the Engineer of equipment in unsatisfactory operating condition, the Contractor shall repair and place such unsatisfactory equipment in satisfactory condition or replace with equipment meeting the requirements of this specification. Equipment used to place markings other than solid or broken lines shall have production capabilities satisfactory to the Engineer. The container must be so equipped and arranged as to satisfy the requirements of the National Fire Underwriters and the Texas Railroad Commission. The Contractor shall supply the Engineer with a thermometer for the project, capable of measuring the temperature of the pavement marking material to be applied.

Beads applied to the surface of the material shall be applied by an automatic bead dispenser attached to the pavement marking equipment in such a manner that the beads are dispensed uniformly and almost instantly upon the marking as the marking is being applied to the road surface. The bead dispenser shall be equipped with an automatic cut-off control, synchronized with the cut-off of the pavement marking equipment.

666.6. Construction Methods. The Contractor shall use a crew experienced in the work of installing pavement markings and shall supply all the equipment and materials necessary for the placement of the pavement markings.

The pavement marking material shall be applied within the material temperature limits recommended by the manufacturer.

The pavement markings shall be placed in proper alignment with guidelines established on the roadway. Deviation from the alignment established shall not exceed two inches and, in addition, the deviation in alignment of the marking being placed shall not exceed one inch per 200 feet of roadway nor shall any deviation be abrupt.

When deemed necessary by the Engineer to achieve specified alignment, the Contractor, at his expense, shall place any additional markings required to achieve alignment specified throughout both straight and horizontally-curved sections of roadway. Any and all additional markings placed on the roadway for alignment purposes shall be temporary in nature and shall not establish a permanent marking on the roadway. Materials used for alignment markings and equipment used to place such markings shall be approved by the Engineer.

During placement of the thermoplastic markings, glass traffic beads shall be uniformly applied to the surface of the markings at a rate sufficient to achieve the retrodirective reflective characteristics specified when observed in accordance with Texas Test Method Tex-828-B.

The pavement upon which the pavement markings are to be placed shall be cleaned and prepared, to the satisfaction of the Engineer, prior to placement of the markings.

Cleaning shall be by any effective method, approved by the Engineer, that completely and effectively removes contaminants, loose materials and conditions deleterious to proper adhesion. When blast cleaning is required, it shall be shown in the plans and shall be done in accordance with the Item, "Blast Cleaning". Portland cement concrete surfaces shall not be cleaned by grinding.

Portland cement concrete surfaces shall be further prepared after cleaning by completely sealing with an epoxy or a methylmethacrylate sealer placed sufficiently in advance of the thermoplastic to allow the release of all solvents. When epoxy sealer is used, the thermoplastic marking shall be applied before the sealer is completely cured.

When deemed necessary by the Engineer, asphaltic surfaces exhibiting polished aggregate shall be primed with a sealer, adhesive or adhesion promoter approved by the Engineer.

The material shall be installed in increments of 4, 6, 8, or 12-inch widths or otherwise shaped as shown in the plans. Deviation from specified width shall not exceed 1/8 inch except when due to undulations in the pavement surface, in which case the deviation in width shall not exceed 1/4 inch.

The material shall not prohibit adhesion of other thermoplastic markings if, at some future time, new markings are placed over existing material.

The application of hot-applied pavement markings shall be done only on a clean, dry pavement having a road surface temperature above 60 F for Portland cement concrete surfaces and above 50 F for asphaltic surfaces. When pavement marking application is by spray and operations cease for five minutes or more, the spray head must be flushed by spraying pavement marking material into a pan or similar container until the pavement marking material being sprayed out the nozzle is at the proper temperature for application. The pavement temperature shall be measured in accordance with Texas Test Method Tex-829-B.

Unless otherwise directed by the Engineer in writing, pavement marking materials shall not be placed on roadways between September 30 and March 1, subject to temperature and moisture limitations specified elsewhere herein.

Unless otherwise specified in the plans, the minimum thickness of spray-applied markings, as measured on a flat plate by micrometer or similar device shall be as shown in the following table:

Description of Surface	Minimum Thickness
Smooth: Portland cement concrete or fine-graded asphaltic concrete pavement	65 mils
Intermediate: Open-graded surface treatment, Grade 4 or 5 aggregate	70 mils
Coarse: Open-graded surface treatment Grade 1, 2 and 3 aggregate	80 mils

The thickness of the markings shall be uniform throughout their lengths and widths. Unless otherwise specified in the plans, the minimum thickness of the markings applied by extrusion, as measured above the plane formed by the pavement surface, shall not be less than 1/8 inch in the center of the marking and 3/32 inch at a distance of one-half inch from the edge. Maximum thickness shall be 3/16 inch. The Contractor shall supply a device, suitable to the Engineer, to measure thickness of the applied extruded markings.

666.7. Performance. Pavement markings shall meet all requirements of this specification for a minimum of 60 calendar days after installation. Pavement markings that fail to meet all requirements of this specification shall be removed and replaced at the expense of the Contractor. The Contractor shall replace all pavement markings failing the requirements of this specification within 30 working days following notification by the Engineer of such failing. All replacement pavement markings shall also meet all requirements of this specification for a minimum of 60 calendar days after installation.

666.8. Sampling and Testing. Sampling and testing will be in accordance with the Department's *MANUAL OF TESTING PROCEDURES.*

666.9. Measurement. Measurement of the markings will be made, for each color, by the linear foot of the various widths of solid and/or broken line, by the square foot of the various shapes or by any other unit as specified in the plans, complete in place.

666.10. Payment. The work performed and materials furnished as prescribed by this item, measured as provided under "Measurement", shall be paid for at the unit price bid for "Thermoplastic Pavement Markings", for each color, per linear foot of the various widths of solid and/or broken line,

per square foot of the various shapes, or per other unit as specified in the plans, complete in place. This price shall be full compensation for cleaning the pavement by any suitable means other than blast cleaning, for furnishing and placing all materials, and for all labor, tools, equipment and incidentals necessary to complete the work.

ITEM 668

RETROREFLECTIVE PREFABRICATED PAVEMENT MARKINGS

668.1. **Description.** This item shall govern for the composition, application, sampling, testing, measurement and payment of retroreflective prefabricated pavement markings of the color, shape, length, and width as specified in the plans and in accordance with the lines established by the Engineer, as well as for pavement preparation and traffic control during material application.

668.2. **Preconstruction Conference.** When required by the Engineer, prior to beginning work on the markings but after receipt by the Engineer of the information referred to in (1) above, a conference will be held between the representatives of the Contractor and the Engineer to set up more completely the sequence of work to be followed and the estimated progress schedule.

668.3. **Materials.** Copies of Departmental Material Specifications are available from the State Department of Highways and Public Transportation, Materials and Tests Division, 38th and Jackson St., Austin, Texas, 78703.

The pavement marking material shall conform to Departmental Specification D-9-8240, "Prefabricated Pavement Markings, Permanent".

668.4. **Construction.**

(1) **General.** The Contractor shall furnish all materials and equipment and, perform work or services necessary for complete and proper construction of the completed system of pavement markings required by the contract.

(2) **Seasonal Limitation.** Unless otherwise directed by the Engineer in writing, pavement marking materials shall not be placed on roadways between September 30 and March 1, subject to temperature and moisture limitations specified elsewhere herein.

(3) **Traffic Conditions.** Roadways on which markings are to be placed may be either free of or open to traffic. On roadways already open to traffic, markings will be placed under existing traffic conditions.

(4) **Dimensions.** Markings will be in accordance with the color, length, width, shape, configuration and location requirements of the plans and as directed by the Engineer.

(5) **Methods.** All material placement will be in accordance with material manufacturer's instructions that have been approved by the Engineer. In addition to the manufacturer's instructions, material placement will be in accordance with surface condition requirements, moisture and temperature requirements listed below.

(6) **Surface Preparation.** The pavement upon which the pavement markings are to be placed shall be cleaned and prepared, to the satisfaction of the Engineer, prior to placement of the markings. Cleaning shall be by any effective method, approved by the Engineer, that completely and effectively removes contaminants, loose materials, and conditions deleterious to proper adhesion. When blast cleaning is required, it shall be shown in the plans and shall be done in accordance with the Item, "Blast Cleaning". Surfaces shall be further prepared after cleaning by sealing or priming, as recommended by the manufacturer of the pavement marking material. Adhesive shall be of the type and quality recommended by the manufacturer of the pavement marking material and shall be approved by the Engineer. Portland cement concrete pavements shall not be cleaned by grinding.

(7) **Moisture.** Pavement to which material is to be applied shall be completely dry. When questionable, pavements will be considered dry if, on a sunny day after observation for 15 minutes, no condensation occurs on the underside of a one (1) square foot piece of clear plastic that has been placed on the pavement and weighted down on the edges.

(8) **Temperature.** Pavement and ambient air temperature requirements recommended by the material manufacturer will be observed. If no temperature requirements are established by the materials manufacturer, material will not be placed if the pavement temperature is below 60 F or if it is above 120 F.

(9) **Clean-Up.** At all times, the project site will be kept free of all unnecessary traffic hazards. Upon completion of the work, the Contractor shall remove all rubbish from the work site, and shall clean and restore the area to a manner acceptable to the Engineer. Also, all damage done by the Contractor during the prosecution of the work must be repaired. Before acceptance, the work site must be neat and in a presentable condition throughout. No extra compensation will be allowed for fulfilling these clean-up requirements.

668.5. Performance.

(1) **Adhesion.** Installed pavement markings shall adhere to the pavement sufficiently to prevent lifting, shifting, smearing, spreading, flowing or tearing by traffic.

(2) **Appearance.** In addition to complying with all requirements listed herein, pavement markings shall present a neat, uniform appearance, and shall be free of unsightly conditions caused by spread of excess adhesive. Markings shall be free of ragged edges and misshapen lines or contours.

(3) **Visibility.** The pavement marking material, in place on the roadway, shall have uniform and distinctive retroreflectance when observed in accordance with Texas Test Method Tex-828-B.

(4) **Observation Period.** Pavement markings shall meet all requirements of this specification for a minimum of 60 calendar days after installation. Pavement markings that fail to meet all requirements of this specification shall be removed and replaced at the expense of the Contractor. The Contractor shall replace all pavement markings failing the requirements of this specification within 30 working days following notification by the Engineer of such failing. All replacement pavement markings shall also meet all requirements of this specification for a minimum of 60 calendar days after installation.

668.6. **Sampling and Testing.** Sampling and testing will be in accordance with the Department's *MANUAL OF TESTING PROCEDURES.*

668.7. **Measurement.** Measurement of the markings will be made for each color by the linear foot of the various widths, by the square foot of the shapes or by any other unit as specified in the plans, complete in place.

668.8. **Payment.** The work performed and materials furnished as prescribed by this item, measured as provided under "Measurement", shall be paid for at the unit price bid for "Retroreflective Prefabricated Pavement Markings" for each color per linear foot of the various widths, per square foot of the various shapes or per other unit as specified in the plans, complete in place. This price shall be full compensation for cleaning the pavement by any suitable means other than blast cleaning, for furnishing and placing all materials, and for all labor, tools, equipment and incidentals necessary to complete the work.

ITEM 670

PAVEMENT MARKING
(Reflectorized Paint)

670.1. **Description.** This item shall govern for the installation of reflectorized paint pavement marking. The color and width of line shall be as specified in the plans.

670.2. **Materials.** The materials shall consist of paint and glass beads. Traffic paint and glass beads used shall be furnished by the Department, at no cost to the Contractor, and may be picked up by the Contractor as indicated in the plans. The Contractor shall place his order for materials through the Project Engineer 15 days before materials are needed. The Con-

tractor shall not use any materials furnished by the Department on any work which is not required by and which does not constitute a part of this contract. Materials not used which were furnished by the Department shall be returned to the Department upon completion of the contract.

670.3. **Construction Methods.** The Contractor shall use a crew experienced in the work of installing pavement markings and in the necessary traffic control for such operations on the roadway surface and shall supply all the equipment, personnel, traffic control, and materials (except paint and beads) necessary for the placement of the pavement markings as shown in the plans or as directed by the Engineer. All work shall be in conformance with the current edition of the Texas MUTCD.

The pavement surface to receive the pavement markings shall be thoroughly cleaned of all dirt, organic growth, or other material that will prevent adhesion of the paint to the roadway surface. Any blast cleaning shall be shown in the plans and shall be in conformance with and paid for under the Item, "Blast Cleaning".

The pavement markings shall be placed in the proper alignment with guides established on the roadway. Deviation from the alignment established shall not exceed two inches, and, in addition, the deviation in alignment of the marking being placed shall not exceed one inch per 200 feet of roadway nor shall any deviation be abrupt.

When deemed necessary by the Engineer, the Contractor, at his expense, shall place any additional pilot markings required to facilitate the placement of the permanent markings in the alignment specified. Any and all additional markings placed on the roadway for alignment purposes shall be temporary in nature and shall not establish a permanent marking on the roadway.

Materials used for pilot markings and equipment used to place such markings shall be approved by the Engineer.

Paint markings on the roadway that are not in alignment or sequence, as shown on the plans or as stated in this specification, shall be totally and completely removed by any effective method approved by the Engineer, except that grinding will not be permitted.

Paint shall be applied at a rate of not less than 15 gallons nor more than 20 gallons per mile of solid four-inch stripe. Application rate for solid eight-inch stripe shall be between 30 and 40 gallons per mile. (These rates yield wet film thicknesses from 15 to 20 mils.)

Beads shall be applied to the paint marking at a uniform rate sufficient to achieve the retroreflective characteristics specified when observed in accordance with Test Method Tex-828-B. All markings placed shall have

uniform and distinctive retroreflective characteristics. Under no circumstances shall the bead application rate be less than six pounds of beads per gallon of paint applied to the road surface.

Applied markings shall be protected from traffic until they have dried sufficiently so as not to be damaged or tracked by normal traffic movements.

670.4. Equipment. Paint striping equipment used to place four-inch solid or broken line shall have the capability of placing a minimum of 60,000 linear feet of marking per working day. Equipment used for placing markings in widths other than four inches shall have capabilities similar to four-inch marking equipment, and shall be capable of placing linear markings up to eight inches in width in one pass.

The equipment shall be maintained in satisfactory operating condition. Four-inch marking equipment will be considered as unsatisfactorily maintained if it fails to have an average hourly placement rate of 7000 linear feet in any five consecutive working days of seven hours or more.

The equipment shall be equipped so that one four-inch broken line and either one or two solid lines can be placed at the same time in alignment and spacing as shown on the plans.

The equipment shall be equipped with an automatic cut-off device (with manual operating capabilities) to provide clean, square marking ends and to provide a method of applying broken line in a stripe-to-gap ratio of 10 to 30. The length of the stripe shall not be less than 10 feet nor longer than 10.5 feet . The total length of the stripe-gap cycle shall not be less than 39.5 feet nor longer than 40.5 feet in variance from one cycle to the next, nor shall the average total length of a cycle for a road mile of broken line exceed 40.5 feet or be less than 39.5 feet.

The equipment shall be capable of placing lines of all widths with clean edges and of uniform cross-section. Four-inch lines shall be four inches plus or minus 1/8 inch. Eight-inch lines shall be eight inches minimum and 8-1/4 inches maximum in width.

The equipment shall be equipped with an outrigger or outriggers as required to place edgelines as called for in the plans.

The equipment shall be equipped with bead dispensers, one for each paint spray gun, placed on the equipment so that beads are applied to the paint almost instantly as the marking is being placed on the roadway surface. The bead dispensers shall be designed and aligned so that beads are applied uniformly to the entire surface of the marking. The bead dispensers shall be equipped with automatic cut-off controls, synchronized with the cut-off of the marking equipment.

Paint pots or tanks shall be equipped with an agitator that will keep the paint thoroughly mixed and may be either a pressurized or non-pressurized type.

670.5. Measurement. Work for Pavement Marking (Reflectorized Paint) will be measured by the linear foot of the various widths.

670.6. Payment. Work performed as prescribed by this item, measured as provided under "Measurement", shall be paid for at the unit price bid for "Pavement Marking (Reflectorized Paint)" per linear foot of the various widths specified. This price shall be full compensation for furnishing all labor, tools, equipment, materials other than traffic paint and beads, and incidentals necessary to complete the work specified, and for obtaining from a Department warehouse, at a location indicated on the plans, all traffic paint and beads or for returning to that warehouse, all paint and beads that are not used on the project.

ITEM 672

JIGGLE BAR TILE

672.1. Description. This item shall govern for the furnishing of jiggle bar tile complete in place in conformity with details shown in the plans and as described herein.

672.2. Material. Copies of Departmental Material Specifications are available from the State Department of Highways and Public Transportation, Materials and Tests Division, 38th and Jackson St., Austin, Texas, 78703.

Jiggle bar tile shall be of either a ceramic body or a plastic resin body construction. Jiggle bar tile shall be either reflectorized or nonreflectorized as specified in the plans. Jiggle bar tiles furnished for any one project shall be of the same material and manufacture and shall conform to the requirements of Departmental Specification D-9-4100, "Jiggle Bar Tile".

672.3. Type.

(1) Reflectorized. Reflectorized jiggle bar tile shall be of the following types:

(a) Type I-A. Type I-A shall contain one face that reflects amber light and the body other than the reflective face shall be yellow.

(b) Type I-C. Type I-C shall contain one face that reflects white light and the body other than the reflective face shall be white.

(c) Type II-A-A. Type II-A-A shall contain two reflective faces each of which shall reflect amber light, and the body other than the reflective faces shall be yellow. The reflective faces shall be located so that the direction of

reflection from one face shall be directly opposite to the direction of reflection of the other face.

(2) **Nonreflectorized.** Nonreflectorized jiggle bar tile shall be of the following types:

(a) **Type W.** Type W shall have a white body.

(b) **Type Y.** Type Y shall have a yellow body.

672.4. **Adhesive.** Adhesive used for placement of jiggle bar tile shall conform to the requirements of the Item, "Epoxy".

672.5. **Construction Methods.** The jiggle bar tile shall be installed where indicated in the plans or as directed by the Engineer. The surface on which tiles are to be placed shall be dry and shall be prepared by any method approved by the Engineer in order to be free from all forms of grease, oil, dirt and other materials deleterious to proper adhesion. The wet epoxy shall be applied in sufficient quantity so as to insure the following:

1. 100% of the bonding area of the tile shall be in contact with the epoxy.

2. The tile itself shall not contact the pavement surface but shall sit on an epoxy "cushion".

3. When the tile is pressed onto the pavement, adhesive shall be forced out around its entire perimeter.

Any excess adhesive or other foreign material on or in front of the reflective face(s) of the tile shall be removed so that reflectivity will not be impaired. Any individual jiggle bar tile placed that does not conform to the requirements of this specification and/or the plans shall be removed and replaced with tile conforming to these requirements at the Contractor's expense.

672.6. **Sampling and Testing.** Sampling and testing of jiggle bar tile and adhesive shall be in accordance with the Department's *MANUAL OF TESTING PROCEDURES*. Samples shall be submitted for testing prior to placing any tile on the roadway.

672.7. **Measurement.** Jiggle Bar Tile will be measured as each jiggle bar tile complete in place.

672.8. **Payment.** The work performed under this item and measured as provided under "Measurement" shall be paid for at the unit price bid for "Jiggle Bar Tile", of the type and material specified, which price shall be full compensation for all labor, materials, incidentals and services necessary to complete the work.

ITEM 674

PAVEMENT MARKERS
(Reflectorized)

674.1. Description. This item shall govern for the furnishing and installing of reflectorized pavement markers at locations designated on the plans or as directed by the Engineer.

674.2. Materials. Copies of Departmental Material Specifications are available from the State Department of Highways and Public Transportation, Materials and Tests Division, 38th and Jackson St., Austin, Texas, 78703.

The markers shall comply with the requirements of Departmental Specification D-9-4200, "Pavement Markers (Reflectorized)", and the adhesion requirements of Test Method Tex-611-J. Adhesive shall conform to the Item, "Epoxy". Markers supplied for any single project shall be of the same manufacture.

674.3. Marker types. Pavement markers shall be of the following types:

Type I-A shall contain one face that reflects amber light and the body other than the reflective face shall be yellow.

Type I-C shall contain one face that reflects white light and the body other than the reflective face shall be white, silver white or light gray.

Type I-R shall contain one face that reflects red light and the body other than the reflective face shall be white, silver white or light gray. The body may be one-half red on the side which reflects red light.

Type II-A-A shall contain two reflective faces each of which shall reflect amber light and the body other than the reflective faces shall be yellow.

Type II-C-R shall contain two reflective faces, one of which reflects white light and one of which reflects red light; the body other than the reflective faces shall be white, silver white or light gray or may be one-half white, silver white or light gray on the side that reflects white light and one-half red on the side that reflects red light.

The reflective faces of the Type II markers shall be located so that the direction of reflection from one face shall be directly opposite to the direction of reflection of the other face.

674.4. Construction Methods. The pavement markers shall be placed at locations in such a way that the color of the reflected light is in accordance with the plans or as directed by the Engineer.

The portion of the highway surface to which the marker is attached by the adhesive shall be prepared by any method approved by the Engineer in order to be free of dirt, curing compound, grease, oil, moisture, loose or unsound pavement and any other material which would adversely affect the bond of the adhesive.

The wet epoxy shall be applied in sufficient quantity so as to insure the following:

1. 100% of the bonding area of the marker shall be in contact with epoxy.

2. The marker itself shall not contact the pavement surface but shall sit on an epoxy "cushion".

3. When the marker is pressed onto the pavement, adhesive shall be forced out around its entire perimeter.

Any excess adhesive or other foreign material on or in front of the reflective face(s) of the marker shall be removed so that reflectivity will not be impaired.

When the project is complete, the markers shall be firmly bonded to the pavement, lines formed by the markers shall be true and the entire installation shall present a neat appearance.

674.5. Sampling and Testing. Sampling and testing will be in accordance with the Department's *MANUAL OF TESTING PROCEDURES.*

674.6. Measurement. Pavement Markers will be measured as each pavement marker complete in place.

674.7. Payment. The work performed and material furnished as prescribed by this item, measured as provided under "Measurement", shall be paid for at the unit price bid for "Pavement Markers (Reflectorized)", of the type specified, which price shall be full compensation for furnishing all materials, all preparation and installation and for all labor, equipment, tools and incidentals necessary to complete the work.

ITEM 676

TRAFFIC BUTTON

676.1. Description. This item shall govern for the furnishing of traffic buttons complete in place in conformity with details shown in the plans and as described herein.

676.2. Material. Copies of Departmental Material Specifications are

available from the State Department of Highways and Public Transportation, Materials and Tests Division, 38th and Jackson St., Austin, Texas, 78703.

Traffic buttons shall be made from a ceramic material and shall be reflectorized or nonreflectorized. The size, color(s), and direction of reflectivity of the button shall be as specified in the plans. Traffic buttons furnished for any one project shall be of the same manufacturer and shall conform to Departmental Specification, D-9-4300, "Traffic Buttons".

The adhesive used to bond the buttons to the pavement shall conform to the Item, "Epoxy".

676.3. Type.

(1) Reflectorized. Reflectorized traffic buttons shall be of the following types:

(a) Type I-A. Type I-A shall contain one face that reflects amber light and the body other than the reflective face shall be yellow.

(b) Type I-C. Type I-C shall contain one face that reflects white light and the body other than the reflective face shall be white.

(c) Type I-R. Type I-R shall contain one face that reflects red light and the body other than the reflective face shall be white.

(d) Type II-A-A. Type II-A-A shall contain two reflective faces oriented 180° to each other, each of which shall reflect amber light, and the body other than the reflective faces shall be yellow.

(e) Type II-C-R. Type II-C-R shall contain two reflective faces oriented 180° to each other, one of which reflects white light and one of which reflects red light. The body of the button other than the reflective face shall be white.

(2) Nonreflectorized. Nonreflectorized traffic buttons shall be of the following types:

(a) Type W. Type W shall have a white body.

(b) Type Y. Type Y shall have a yellow body.

676.4. Construction Methods. The traffic buttons shall be placed in accordance with the plans or as directed by the Engineer. The portion of the highway surface to which the button is attached by the adhesive shall be prepared by any method approved by the Engineer in order to be free of dirt, curing compound, grease, oil, moisture, loose or unsound pavement and any other material which would adversely affect the bond of the adhesive. The wet epoxy shall be applied in sufficient quantity so as to insure the following:

1. 100% of the bonding area of the button shall be in contact with epoxy.

2. The button itself shall not contact the pavement surface but shall sit on the epoxy "cushion".

3. When the button is pressed onto the pavement, adhesive shall be forced out around its entire perimeter.

Any excess adhesive or other foreign material on or in front of the reflective face(s) of the button shall be removed so that reflectivity will not be impaired.

When the project is complete, the button shall be firmly bonded to the pavement, lines formed by the buttons shall be true, and the entire installation shall present a neat appearance. Any individual button placed that does not conform to the requirements of this specification and/or plans shall be removed and replaced with buttons conforming to these requirements at the Contractor's expense.

676.5. Sampling and Testing. Testing will be in accordance with the Department's *MANUAL OF TESTING PROCEDURES*.

676.6. Measurement. Traffic Buttons will be measured as each traffic button complete in place.

676.7. Payment. The work performed and material furnished as prescribed by this item, measured as provided under "Measurement", shall be paid for at the unit price bid for "Traffic Buttons" of the type specified, which price shall include all labor, epoxy adhesive and all other materials and services necessary to complete the work.

ITEM 678

BLAST CLEANING

678.1. Description. This item shall govern for the blast cleaning of surface areas prior to the placement of pavement markings and/or for removal of existing pavement markings.

678.2. Material. Blasting medium shall be a quality commercial product capable of producing the specified surface cleanliness without the deposition of deleterious materials on the cleaned surface.

678.3. Equipment. All equipment shall be approved by the Engineer prior to use and shall be of sufficient capacity to efficiently and economically clean the roadway surface to the specified cleanliness. Equipment shall be power driven and in good operating condition. Equipment shall utilize

moisture and oil traps, in working order, of sufficient capacity to remove contaminants from the air and prevent deposition of moisture, oil or other contaminants on the roadway surface.

678.4. **Construction Methods.** The blast cleaning shall be performed only on that portion of the roadway surface specified in the plans. Widths, lengths and shapes of the blast cleaned surface shall be of sufficient size to include the full area of the specified pavement marking to be placed or removed.

(1) **Cleaning for Marking Placement.** Blast cleaning on Portland cement concrete surfaces shall be sufficient to remove all old pavement markings and any other contaminants. Over-blasting to the extent of possible damage to the roadway surface shall be held to a minimum. Very small particles of tightly adhering existing markings may remain in place if, in the opinion of the Engineer, complete removal of the small particles will result in pavement surface damage.

All surfaces other than Portland cement concrete surfaces required to be cleaned by blast cleaning, shall be blast cleaned sufficiently to remove loose and flaking conditions or markings on the roadway surface.

(2) **Removal of Existing Markings.** Existing pavement markings to be removed by blast cleaning as specified in the plans shall be removed by blasting to the extent that the pavement marking is either completely removed or obliterated to the satisfaction of the Engineer.

678.5. **Measurement.** Blast Cleaning in the areas as shown on the plans will be measured by the linear foot of the various widths, by the square foot of the various shapes, or by other unit as specified in the plans.

678.6. **Payment.** The work performed and material furnished as prescribed by this item, measured as provided under "Measurement", shall be paid for at the unit price bid per linear foot of the various widths, per square foot of the various shapes, or per other unit as specified in the plans for "Blast Cleaning", which price shall be full compensation for all materials, tools, equipment, labor and for all incidentals necessary to complete the work.

DIVISION I, DOCUMENTARY FORMS

NOTICE TO CONTRACTORS OF PROPOSED TEXAS HIGHWAY CONSTRUCTION

Sealed proposals addressed to the Engineer-Director, State Department of Highways and Public Transportation, for the improvement of certain highways in the counties listed in the respective notices attached hereto, will be received at the office of the Engineer-Director for Highways and Public Transportation, Austin, Texas, until the time specified in each respective notice, then publicly opened and read.

Detailed plans and specifications of the work may be examined and information may be obtained at the Engineer's office listed in each respective notice and at the office of the State Department of Highways and Public Transportation, Dewitt C. Greer State Highway Building, Austin, Texas. Those desiring individual plans may secure same from a commercial blue print company of Austin, Texas. Minimum wage rates have been, or will be, predetermined as required by law, and will be set forth in the bid proposals. All proposals must be secured from the Construction Engineer (File D-6) Austin, Texas.

Certified check, cashiers check, bank money order or bank draft on a state or national bank of the specified amount, made payable without recourse to the State Highway and Public Transportation Commission, must accompany each proposal as a guarantee that the bidder, if successful, will enter into contract, and make bond in accordance with requirements of the specifications. The right is reserved by the State Department of Highways and Public Transportation Commission to reject any or all proposals and to waive all technicalities.

All bids received will be retained by the State Department of Highways and Public Transportation, conditional bids will not be considered.

The State Department of Highways and Public Transportation hereby notifies all bidders that it will affirmatively insure that in any contract entered into pursuant to this notice, minority business enterprises will be afforded full opportunity to submit bids in response to this invitation and will not be discriminated against on the ground of race, color, sex, or national origin in consideration for an award.

* * * * *

NOTE: The items, descriptions and quantities for all projects shown in detail notice to Contractors are tentative only and are not necessarily listed in the same order and amounts as may be shown in the official proposal for the scheduled lettings. Preliminary estimated net cost of the project, together with the proposal guaranty are shown in each respective notice.

CONTRACTORS' NOTICE OF TEXAS HIGHWAY CONSTRUCTION

Sealed proposals for constructing _____ miles of _____

From _____

To _____

on Highway No. _____, covered by _____ in _____

_____ County, will be received at the State Department of Highways and Public Transportation, Austin, until 9:00 A.M., _____, 19____, and then publicly opened and read.

Plans and specifications including minimum wage rates as provided by Law are available at the office of _____, _____ Engineer, _____ Texas, and State Department of Highways and Public Transportation, Austin.

Usual rights reserved.

CONTRACTORS' NOTICE OF TEXAS HIGHWAY CONSTRUCTION

Sealed proposals for constructing _____ miles of _____

From _____ _____

To _____ _____

on Highway No. _____, covered by _____ in _____

_____ County, will be received at the State Department of Highways and Public Transportation, Austin, until 9:00 A.M., _____, 19____, and then publicly opened and read.

THIS CONTRACT IS SUBJECT TO THE WORK HOURS ACT OF 1962, PL-87-581 AND IMPLEMENTING REGULATIONS.

The State Department of Highways and Public Transportation, in accordance with the provisions of Title VI of the Civil Rights Act of 1964 (78 Stat. 252) and the Regulations of the U.S. Department of Transportation (15 C.F.R., Part 8), issued pursuant to such Act, hereby notifies all bidders that it will affirmatively insure that the contract entered into pursuant to this advertisement will be awarded to the lowest responsible bidder without discrimination on the ground of race, color, or national origin, and further that it will affirmatively insure that in any contract entered into pursuant to this advertisement, minority business enterprises will be afforded full opportunity to submit bids in response to this invitation and will not be discriminated against on the grounds or race, color or national origin in consideration for an award.

Plans and specifications including minimum wage rates as provided by Law are available at the office of _____, _____ Engineer, _____, Texas, and State Department of Highways and Public Transportation, Austin.

Usual rights reserved.

(Federal Aid
Other Than Interstate)

CONTRACTORS' NOTICE OF TEXAS HIGHWAY CONSTRUCTION

Sealed proposals for constructing_____, miles of _____

From_____

To _____

on Highway No. _____, covered by _____ in _____

_____ County, will be received at the State Department

of Highways and Public Transportation, Austin, until 9:00 A.M.,

_____ 19_____, and then publicly opened and read.

The State Department of Highways and Public Transportation, in accordance with the provisions of Title VI of the Civil Rights Act of 1964 (78 Stat. 252) and the Regulations of the U.S. Department of Transportation (15 C.F.R., Part 8), issued pursuant to such Act, hereby notifies all bidders that it will affirmatively insure that the contract entered into pursuant to this advertisement will be awarded to the lowest responsible bidder without discrimination on the ground of race, color, or national origin, and further that it will affirmatively insure that in any contract entered into pursuant to this advertisement, minority business enterprises will be afforded full opportunity to submit bids in response to this invitation and will not be discriminated against on the grounds of race, color, or national origin in consideration for an award.

Plans and specifications including minimum wage rates as provided by

Law are available at the office of_____, _____

Engineer,_____, Texas, and State Department of Highways and

Public Transportation, Austin.

Usual rights reserved.

THIS PROPOSAL ISSUED TO:

Control_____
Project_____
Highway _____
County_____

PROPOSAL TO THE STATE DEPARTMENT OF HIGHWAYS AND PUBLIC TRANSPORTATION COMMISSION

FOR THE CONSTRUCTION OF_____
IN_____ _____ _____ _____COUNTY, TEXAS

The Undersigned, as bidder, declares that the only person or parties interested in this proposal as principals are those named herein; that this proposal is made without collusion with any other person, firm, corporation; that he has carefully examined the form of contract, instructions to bidders, profiles, grades, specifications, and the plans therein referred to, and has carefully examined the locations, conditions and classes of materials of the proposed work; and agrees that he will provide all the necessary machinery, tools, apparatus, and other means of construction, and will do all the work and furnish all the materials called for in the contract and specifications in the manner prescribed therein and according to the requirements of the Engineer as therein set forth.

It is understood that the following quantities of work to be done are approximate only, and are intended principally to serve as a guide in figuring out the bids.

It is further understood that the quantities of work to be done and materials to be furnished may be increased or diminished as may be considered necessary, in the opinion of the Engineer, to complete the work fully as planned and contemplated, and that all quantities of work, whether increased or decreased, are to be performed at the unit prices set forth below except as provided for in the specifications.

It is further understood that the work is to be completed in full in _____ working days.

Accompanying this proposal is a certified check, cashier's check, bank money order or bank draft on a State or National Bank payable to the order of the State Department of Highways and Public Transportation Commission for_____Dollars ($_____).

State Department of Highways and Public Transportation
Form 419A Revised 4-78

BID PROPOSALS MUST NOT BE DISASSEMBLED

NOTICE TO CONTRACTORS

ANY CONTRACTORS INTENDING TO BID ON ANY WORK TO BE AWARDED BY THIS DEPARTMENT MUST SUBMIT A SATISFACTORY "FINANCIAL STATEMENT" AND "EXPERIENCE QUESTIONNAIRE" AT LEAST TEN DAYS PRIOR TO THE LETTING DATE.

UNIT PRICES MUST BE SHOWN IN WORDS FOR EACH ITEM LISTED IN THIS PROPOSAL.

PROJECT

COUNTY

PROPOSAL SHEET

STATE DEPARTMENT OF HIGHWAYS AND PUBLIC TRANSPORTATION
FORM 234-6 REV. 4-71

ALT.	ITEM CODE			ITEM DESCRIPTION AND UNIT BID PRICE WRITTEN IN WORDS	UNIT	APPROXIMATE QUANTITIES	DEPARTMENTAL USE ONLY
	ITEM NO.	SPEC CODE	S.Y. NO.				
				DLRS AND CENTS			
				DLRS AND CENTS			
				DLRS AND CENTS			
				DLRS AND CENTS			
				DLRS. AND CENTS			
				DLRS. AND CENTS			
				DLRS. AND CENTS			
				DLRS AND CENTS			
				DLRS AND CENTS			
				DLRS AND CENTS			
				DLRS. AND CENTS			

The check accompanying this proposal shall be returned to the bidder, unless in case of the acceptance of the proposal the bidder shall fail to execute and file a contract within fifteen days after its acceptance, in which case the check shall become the property of said Commission, and shall be considered as payment for damages due to delay and other inconveniences suffered by said Commission on account of failure of the bidder to execute contract. It is understood that the party of the first part reserves the right to reject any and all bids.

In the event of the award of a contract to the undersigned, the undersigned will make bonds for the full amount of the contract, to secure proper compliance with the terms and provisions of the contract, and to insure and guarantee the work until final completion and acceptance, and to guarantee payment of all lawful claims for labor performed and materials furnished in the fulfillment of the contract.

The work proposed to be done shall be accepted when fully completed and finished to the entire satisfaction of the State Engineer-Director.

The undersigned certifies that the bid prices contained in this proposal have been carefully checked and are submitted as correct and final.

_____
(Print Firm Name)

*Signed _____
(Title)

_____

_____
Address Zip Code

_____
Address Zip Code

IMPORTANT

CHECK RETURN INFORMATION ON
PAGE I MUST BE COMPLETED.

*NOTE: Signatures to comply with Article 2.5. of the standard specifications.

Form 419A Revised 7-75

PROJECT
COUNTY

State Department of Highways
and Public Transportation
Form 234-A 5-64-5M

ITEM - CODE			ITEM DESCRIPTION	UNIT	APPROXIMATE QUANTITIES	UNIT BID PRICE	EXTENSION
ITEM NO	DESC. CODE	S. P. NO					

State Department of Highways and Public Transportation
Form 389-A

Control _____
Project _____
Highway _____
County _____

CONTRACT

This agreement made this _____ day of _____, 19____, by and between the State of Texas, represented by the Engineer-Director, State Department of Highways and Public Transportation, party of the first part, and _____

_____

_____

his/their executors, administrators, heirs, successors or assigns, the Contractor, party of the second part.

WHEREAS, the State desires to enter into a contract for the highway improvement as shown and described in the plans, specifications and special provisions included herein or as far as the money available will construct in accordance with the provisions of the State Statutes, and

WHEREAS, the Contractor has been engaged in and now does such work and represents that he is fully equipped, competent and capable of performing the desired and herein outlined work and is ready and willing to perform such work in accordance with the unit prices listed herein and the provisions of the herein included specifications, special provisions and plans, now

WITNESSETH: That for and in consideration of the unit prices listed herein, a part of this contract, the Contractor agrees to do, at his own proper cost and expense, all the work necessary for the highway improvement as shown and described in the plans and in accordance with the provisions of the specifications and special provisions which are a part of this contract.

Time for completion of this contract shall be computed beginning _____, 19____.

The work to be constructed under this contract shall be completed in _____ working days.

And the State in consideration of the full and true performance of said work by the Contractor hereby agrees and binds itself to pay to the Contractor for the quantities of work performed in compliance with this contract at the respective unit prices set forth herein, subject to adjustment as herein provided. The following items of work and respective unit prices are those contained in the original proposal and are a part of this contract. The State limits its obligation hereunder to the funds available.

The Contractor expressly warrants that he has employed no third person to solicit or obtain this contract in his behalf, or to cause or procure the same to be obtained upon compensation in any way contingent, in whole or in part, upon such procurement, or in compensation for services in connection therewith, any brokerage commission or percentage upon the amount receivable by him hereunder; and that he has not in estimating the contract price demanded by him, included any sum by reason of any such brokerage, commission or percentage; and that all moneys payable to him hereunder are free from all obligations of any other person for services rendered, or supposed to have been rendered, in the procurement of this contract. He further agrees that any breach of this warranty shall constitute adequate cause for the annulment of this contract by the State or for the deduction from any sums due or to become due thereunder an amount equal to any brokerage, commission or percentage so paid or agreed to be paid or both.

In the employment of labor in the performance of this contract, preference shall be given, other conditions being equal, to honorably discharged service personnel, but no other preference or discrimination among citizens of the United States shall be made.

It is acknowledged and agreed by the parties hereto that this contract is the full and complete contract for the construction of the work called for and described herein.

IN WITNESS WHEREOF, the parties hereto have set their hands the date herein named.

STATE OF TEXAS
Party of the First Part

Certified as being executed for the purpose and effect of activating and/or carrying out the orders, established policies, or work programs heretofore approved and authorized by the State Department of Highways and Public Transportation Commission:

By: _____
Construction Engineer

Executed and approved for State Highways and Public Transportation Commission under authority of Commission Minute . . and Administrative Order No. .

RECOMMENDED FOR EXECUTION:

_____
Director, Finance

CONTRACTOR
Party of the Second Part

_____
(Print Firm Name)

By: _____
(Title)

By: _____
(Title)

By: _____
(Title)

State Department of Highways
and Public Transportation
Form 390-A Revised 4-81

PERFORMANCE BOND

KNOW ALL MEN BY THESE PRESENTS: That we _____ _____

_____ _____ _____

as principal, and the other undersigned as surety, as held and firmly bound

unto the State of Texas, in the penal sum of _____

_____ Dollars ($_____),

lawful money of the United States, well and truly to be paid to the State of Texas, and we bind ourselves, our heirs, successors, executors, and administrators, jointly and severally, firmly by these presents.

Whereas, the above bounden principal has entered into the foregoing contract with the State of Texas attached hereto, and whereas, under the law said principal is required before commencing the work provided for in said contract to execute a bond in the amount of said contract.

The condition of this obligation is such that if the above bounden principal, his or its heirs, successors, executors, and administrators shall well and faithfully do and perform each and every, all and singular, the work in accordance with the plans, specifications, and contract documents as provided in said contract aforesaid, then this obligation shall be null and void; otherwise to be and remain in full force and effect.

WITNESS our hands this the _____ day of _____, 19____.

_____
PRINCIPAL (Print Firm Name)

By: _____
(Title)

By: _____
(Title)

By: _____
(Title)

_____
SURETY (Print Firm Name)

*By: _____
(Title)

_____
SURETY (Print Firm Name)

*By: _____
(Title)

Approved as to form:
ATTORNEY GENERAL OF TEXAS

By: _____
Assistant Attorney General

*Note: If signed by an officer of the Surety Company there must be on file a certified extract from the by-laws showing that this person has authority to sign such obligation. If signed by an Attorney in Fact, we must have copy of power of attorney for our files.

State Department of Highways
and Public Transportation
Form 390-B Revised 4-81

PAYMENT BOND

KNOW ALL MEN BY THESE PRESENTS: That we _____

_____

as principal, and the other undersigned as surety, as held and firmly bound

unto the State of Texas, in the penal sum of _____

_____ Dollars ($_____),

lawful money of the United States, well and truly to be paid to the State of Texas, and we bind ourselves, our heirs, successors, executors, and administrators, jointly and severally, firmly by these presents.

Whereas, the above bounden principal has entered into the foregoing contract with the State of Texas attached hereto, and whereas, under the law said principal is required before commencing the work provided for in said contract to execute a bond in the amount of said contract solely for the protection of all claimants supplying labor and materials as defined by law, in the prosecution of the work provided for in said contract, for the use of each such claimant.

The condition of this obligation is such that if the above bounden principal, his or its heirs, successors, executors, and administrators shall well and faithfully make payments to each and every claimant as defined by law, supplying labor and materials as defined by law, in the prosecution of the work provided for in said contract aforesaid, then this obligation shall be null and void; otherwise to be and remain in full force and effect.

WITNESS our hands this the _____ day of _____, 19____.

_____
PRINCIPAL (Print Firm Name)

By: _____
(Title)

By: _____
(Title)

By: _____
(Title)

_____
SURETY (Print Firm Name)

*By: _____
(Title)

_____
SURETY (Print Firm Name)

*By: _____
(Title)

Approved as to form:
ATTORNEY GENERAL OF TEXAS

By: _____
Assistant Attorney General

*Note: If signed by an officer of the Surety Company there must be on file a certified extract from the by-laws showing that this person has authority to sign such obligation. If signed by an Attorney in Fact, we must have copy of power of attorney for our files.