UNION PACIFIC

BUILDING AMERICA®

ENGINEERING TRACK MAINTENANCE

Field Handbook

Revision: January 19, 2015

PB-22000H

DO YOU KNOW WHERE YOUR *RED ZONES* ARE?

A Red Zone is defined to be that area, within an arm's length of the track or any physical position, which places the employee in a life-threatening situation.

Every job or task will have its own set of Red Zones.

Make sure to identify the Red Zones in your job briefing and then be aware of entering the Red Zones as work progresses.

<u>Examples of Red Zones in Engineering are:</u>

- **Working within 15 feet of an adjacent live track.**
- **Working within 15 feet (in front of or behind) of a piece of on-track equipment.**
- **Working within 10 feet of the radius of any crane in use.**
- **Working within 20 feet of any switch / track panel being loaded or unloaded.**
- **Working on any bridge more than 12 feet above the ground / water or any other elevated structure more than 6 feet above the ground.**
- **Working at or through road crossings at grade.**
- **Working beneath any jacked, blocked or suspended machines, equipment or cars.**
- **Climbing or working on a pole.**

"Safety is* MY *Responsibility"

BUILDING AMERICA®

Engineering Department

"Safety is MY *Responsibility"*

<u>It is my responsibility to:</u>

- **Come to work with a clear mind and a positive attitude.**
- **Inspect the tools I use and make sure they are safe.**
- **Maintain the proper distance when following track cars, track machines and trains.**
- **Look out for myself and the people working close by.**
- **Use the proper lifting techniques when lifting and moving material. Get additional help or use a crane to lift or handle heavy objects.**
- **Wear my hardhat, hearing protection, eye protection, safety vest and respirator.**
- **Show up to work with the proper attire and protective footwear.**
- **Look out for trains, locomotives, cars or other moving equipment.**
- **Expect movement at any time, on any track, in either direction.**
- **Ensure that all people working with my gang, including contractors, have been included in our Job Briefing.**
- **Keep my work area clean and clean up after I have finished the job.**
- **Always keep my mind on what I am doing – a split second of inattention can result in a serious accident.**

"Shortcuts Hurt"

UNION PACIFIC RAILROAD
Engineering Track Maintenance Field Handbook

© Copyright Union Pacific Railroad, 2013. All rights reserved.

The Engineering Track Maintenance Field Handbook provides guidelines, procedures and policies for the maintenance of Union Pacific Railroad owned track and right of way. Engineering personnel responsible for maintaining the track and right of way should maintain a copy of this handbook and keep it available for reference.

The Engineering Track Maintenance Field Handbook is a tool that contains general maintenance information and it is intended to be used in conjunction with Standard Work Management on the UPRR Website. MyUP> UP Way> Standard Work

Engineering personnel responsible for maintenance and inspection of the track and right of way must exercise every effort to correct conditions not found in compliance with this publication. These guidelines, procedures and policies can be superseded by instructions issued via Special Instruction or General Order.

The Federal Railroad Administration's (FRA) Track Safety Standards are the legal minimum requirements to which the track structure is to be maintained and must be complied with at all times. FRA Track Safety Standards supersede any practice or guideline in this manual if less restrictive than FRA Track Safety Standards.

CONFIDENTIAL AND PROPRIETARY: **This document includes information confidential and proprietary to the Union Pacific Railroad. No part of this manual may be reproduced, transmitted, released, or used in any form or by any means, electronic or mechanical, including photocopying, recording, or information recording and retrieval systems, for any purpose other than as authorized by Union Pacific Railroad. It is advised that other railroads do not utilize this guide for their own maintenance as it is tailored to the Union Pacific Operations.**

REVISED CONTENT: **The content of this manual will be revised periodically. The latest revision may be found at the Engineering employee website under the Procedures and Standards tab. A Lotus Notes message will indicate when such revisions are available. For additional copies of this manual, request Publication PB-22000 or PB-22000H for the Field Handbook, on the UPRR e-procurement system.**

CORRECTIONS OR COMMENTS: **This publication may include technical inaccuracies or typographical errors. Please notify the Engineering Methods and Research group of errors/corrections by contacting one of the Senior Managers of Engineering Methods at ETMFH@up.com. This email can also be used for proposed changes.**

Engineering Methods & Research
Union Pacific Railroad
1400 Douglas Street, Stop 0910
Omaha, NE 68179

JOB BRIEFING GUIDELINES

Safety, Quality, and Productivity are the result of well planned and properly conducted job briefings.

STEP 1. Plan the Job Briefing.

A. Develop your own work plan by:
   1. Reviewing work or task to be accomplished.
   2. Checking the job location and work area.
   3. Breaking the work or task down into step-by-step procedures.
   4. Determining tool, equipment, and material requirements.
   5. Determining which safety rules or procedures are applicable.
   6. Determining proper form of On-track Safety, if it's necessary to foul the track.

B. Consider existing and potential hazards that might be involved as a result of:
   1. Job and weather conditions.
   2. The nature of the work to be done.
   3. The job location.
   4. The tools, equipment, and materials used.
   5. Equipment to be worked on.
   6. Traffic conditions and visibility.
   7. Time of day.
   8. Safety or personal protective equipment required.

C. Consider how work assignments will be made.
   1. Group assignments.
   2. Individual assignments.
   3. According to the abilities and experiences of individuals.

STEP 2. Conduct the Job Briefing

A. Explain work or task to employees.
   1. What is to be done.
   2. Why it is to be done.
   3. When it is to be done.
   4. Where it is to be done.
   5. How it is to be done.
   6. Who is to do it.
   7. What safety precautions are necessary.
   8. Type of On-Track Safety, including OTS for adjacent tracks.

B. Discuss existing or potential hazards and ways to eliminate or protect against them. Identify your Red Zones.

C. Make definite work assignments.
   1. Make sure employees understand assignments.
   2. Ask questions of the "how" and "why" type.

D. If special tools, materials, equipment, or methods are to be used, make sure employees know how to proceed safely.

E. Issue all instructions clearly and concisely; check to see that they are understood.

STEP 3. Job Briefing for Special Conditions.

A. Complex jobs.
   1. Brief only a portion of the job.
   2. Give additional briefing as the job progresses.

B. Changes in job conditions-when it becomes necessary to change plans and procedures as the job progresses, brief employees on these changes. (As an example: the weather condition changes.)

C. Changes in type of On-Track Safety.

STEP 4. Follow up by Supervisor.

It is important that frequent checks be made as the job progresses to be sure that:

A. Your plans are being followed and correct work methods used.

B. Each person is carrying out the assigned responsibilities.

C. Any hidden hazards have been identified and action initiated to eliminate; or determine what precautions are required.

STEP 5. Individual Responsibility.

All employees are responsible to see that the work plan is carried out according to the job briefing or modified when conditions changes.

TABLE OF CONTENTS

1.0 ROADBED

1.1 Cross Section 1-2
1.2 Drainage 1-2
1.2.1 General Considerations 1-2
1.2.2 Grade 1-2
1.3 Surface Drainage 1-2
1.3.1 Ditch Construction and Maintenance 1-2
1.3.2 Culverts 1-3
1.3.3 Grade Crossing Drainage 1-3
A. Surface Drainage at Grade Crossings 1-3
B. Surface Drainage at Multiple Grade Crossings 1-4
C. Subsurface Drainage at Grade Crossings 1-4
D. Removal From Service 1-4
1.3.4 Culvert Installation 1-5
1.3.5 Culvert Identification 1-5
1.3.6 High Water Levels 1-5
1.3.7 Berms and Levees 1-5
1.3.8 Erosion Control 1-5
1.4 Subsurface Drainage 1-5
1.4.1 Perforated Pipe 1-6
1.4.2 Engineering Fabric 1-7
1.5 Stability 1-7
1.5.1 Heaving and Soft Track 1-7
1.5.2 Embankment Stability 1-8
A. Unexpected Embankment Settling or Failure 1-8
1.5.3 Borrow Pits 1-8
1.6 Ballast 1-9
1.6.1 Purpose 1-9
1.6.2 Ballast Section 1-9
1.6.3 Sources and Gradation 1-10
1.6.4 Distribution 1-10
1.6.5 Stock Piling 1-12
1.6.6 Ballast Car Release 1-12
1.6.7 Spot Maintenance 1-13
1.6.8 Program Maintenance 1-13

2.0 TRACK GEOMETRY

2.1 Geometry Measurements 2-2
2.1.1 Post Derailment Track Measurements 2-2
2.1.2 Determine Designated Rail 2-2
2.2 Track Alignment 2-2
2.2.1 Designated Line Rail for Curved Track 2-2
2.2.2 Designated Line Rail for Tangent Track 2-2
2.2.3 Designated Line Rails for Turnouts and Crossovers 2-3
2.2.4 Staking Curves 2-3
2.2.5 Measuring Alignment 2-3
2.2.6 Alignment Limits 2-4
2.2.7 Restoring Uniform Alignment 2-5
2.2.8 Line Ordinates in Turnouts and Crossovers 2-5
A. Line Ordinates Behind Frog 2-6
2.3 Track Gage 2-6
2.3.1 Designated Gage Rail 2-6
2.3.2 Standard Gage 2-6
2.3.3 Measuring Gage 2-6
2.3.4 Gage Limits 2-7
2.3.5 Gage Rods 2-8
2.3.6 Restoring Standard Gage 2-8
2.3.7 Program Maintenance 2-9
2.4 Clearances 2-9
2.4.1 Measuring Track Centers 2-9
2.4.2 Minimum Track Centers 2-9
2.4.3 Track Centers in Crossover Switches 2-10
2.4.4 Minimum Clearances 2-11
2.4.5 Allowable Superelevation in Adjacent Tracks 2-11
2.5 Grade 2-11
2.5.1 Designated Grade Rail 2-12

2.5.2 Grade Stakes 2-12
2.5.3 Multiple Track Grade Crossings 2-12
2.5.4 Turnouts and Crossovers 2-12
2.5.5 Vertical Curves 2-12
2.6 Surface 2-12
2.6.1 Measuring Crosslevel and Superelevation 2-12
2.6.2 Measuring Warp (twist) 2-13
2.6.3 Tank Car Warp 2-14
2.6.4 Measuring Profile 2-14
2.6.5 Track Surface Limits 2-15
2.6.6 Spirals 2-17
2.6.7 Superelevation 2-18
2.6.8 Curve Markers 2-20
2.6.9 Restoring Surface 2-21
2.6.10 Surfacing Steel Tie Installations 2-22
2.6.11 Surfacing at Signal Detectors 2-22
2.6.12 Track Shims and Planks 2-23
2.7 Vehicle Track Interaction (VTI) 2-23
2.7.1 Hardware Used for VTI System 2-23
2.7.2 VTI Thresholds 2-24
2.7.3 Handling of VTI Exceptions 2-25
2.8 Performance Based Track Geometry (PBTG) 2-25
2.8.1 PBTG System 2-25
2.8.2 PBTG Exception Criteria 2-25
2.8.3 Track Evaluation Car PBTG Exception Report 2-25
2.8.4 Track Evaluation Car PBTG Recommended Action Report 2-26

3.0 TIES AND FASTENINGS

3.1 Ties 3-3
3.1.1 Types and Applications 3-3
A. Wood Ties 3-3
B. Concrete Ties 3-3
C. Steel Ties 3-3
D. Composite Ties 3-4
E. Borate Ties 3-4
3.1.2 Installation and Spacing 3-4
3.1.3 Switch Ties 3-6
A. Installing Switch Ties at Turnouts 3-6
B. Installing Switch Ties at New Turnout Locations 3-7
C. Installing Switch Ties in Crossover Switches 3-7
3.1.4 Head Block and Switch Machine Ties 3-7
3.1.5 Transition Zones 3-8
3.1.6 Tie Drilling 3-9
3.1.7 Defective Wood or Composite Ties 3-10
3.1.8 Non-Defective Tie Distribution 3-10
3.1.9 Joint Tie Support 3-10
A. Class 1 and 2 Tracks 3-10
B. Class 3, 4, 5 and 6 Tracks 3-11
3.1.10 Program Maintenance for Wood Ties 3-11
3.1.12 Defective Concrete Ties 3-12
3.1.13 Minimum Number of Non-Defective Concrete Ties 3-13
3.1.14 Maximum Number of Consecutive Non-Supportive Concrete Ties 3-14
3.1.15 UPRR Concrete Tie Rating Scale 3-15
3.2 Concrete Tie Maintenance 3-15
3.2.1 Rail Seat Abrasion 3-16
3.2.2 Concrete Tie Pads 3-18
3.2.3 Concrete Tie Abrasion Repairs 3-18
3.2.4 Concrete Tie Insulators 3-19
3.2.5 Concrete Tie Spring Rail Clips 3-20
3.2.6 Concrete Tie Shoulder Replacement 3-20
3.2.7 Concrete Switch Tie Lag Inspection 3-21
3.2.8 Concrete Switch Tie Lag Repair 3-21
3.2.9 Damaged Concrete Tie Temporary Shoulder Repair 3-23
3.2.10 Insulated Joints in Concrete Tie Track 3-23
3.3 Elastic Fasteners 3-24
3.3.1 Spring Clips 3-24
3.3.2 Safelok I Clips 3-25
3.3.3 Safelok III Clips 3-26

3.3.4 E-Clips 3-27
3.3.5 Vossloh Fastening System 3-27
A. Vossloh Fastening System Parts 3-27
B. Fastener Installation 3-28
C. Broken Lag Removal 3-29
D. Insert Replacement 3-30
E. Vossloh Joint Fastenings 3-30
F. Rail Relay on Ties with the Vossloh Fastening System 3-31
3.3.6 Insulated Joint Fastenings 3-31
3.3.7 Weld-On Shoulders 3-32
A. Installing Non-Insulated Weld-on Shoulders 3-32
B. Installing Insulated Weld-on Shoulders 3-32
C. Replacing Weld-on Shoulders 3-32
D. Welding Weld-on Shoulders 3-32
E. Installing Weld-on Shoulders in Various Applications 3-32
3.3.8 Hook-In Shoulders 3-33
3.4 Tie Plates 3-33
3.4.1 Double Shoulder Tie Plates 3-33
3.4.2 Tie Plate Requirements 3-33
3.4.3 Curve Blocks 3-34
3.4.4 Elastic Fastener Plates 3-34
3.5 Spikes and Screws 3-35
3.5.1 Spikes 3-35
3.5.2 Joint Spikes 3-35
3.5.3 Spike Pattern 3-35
A. Spiking Turnouts 3-36
B. Spiking Road Crossings 3-37
3.5.4 Lag Screws 3-37
3.5.5 Evergrip Lag Screw 3-37
3.6 Tie Mainteance… 3-38
3.6.1 Wood Tie Identification… 3-38

4.0 RAIL AND JOINTS

4.1 General 4-4
4.2 Rail Identification 4-4
4.2.1 Rail Branding 4-4
4.2.2 Rail Stamping 4-4
4.2.3 Hydrogen Elimination 4-4
4.2.4 Rail Chemistry 4-5
4.2.5 Rail Sections 4-6
4.3 Rail Relays and Wear Limits 4-6
4.3.1 Classification and Use of Secondhand Rail 4-6
A. Manufacturing Process Restrictions 4-7
B. Acceptable Lengths 4-8
C. Wear Measurement References 4-8
D. Weld Plant Classification Parameters 4-8
E. Internal Defects 4-8
F. Drilled Stick Rail 4-8
G. Marking of Classified Rails 4-8
H. Shipment Requirements of Stick Rail 4-8
4.3.2 Out-of-Face Rail Relays 4-8
4.3.3 Curve Rail Relays 4-8
4.3.4 Curve Rail Wear Limits 4-9
4.3.5 Curve Rating Process 4-10
4.3.6 Derailment Relays 4-11
4.4 Rail Handling and Placement 4-11
4.4.1 Rail Handling 4-11
4.4.2 Rail Train Operations 4-11
4.4.3 Rail Placement 4-11
4.4.4 Rail Placement for Loading 4-12
4.5 CWR Rail Laying Temperatures 4-12
A. Neutral Temperature 4-12
B. Temperature Differential 4-12
4.5.1 Laying CWR 4-13
A. Monitor Rail Movement 4-13
B. Heat Rail 4-14
C. Rail Anchoring 4-15
4.5.2 CWR String Indication 4-15
4.5.3 Laying CWR to Proper Neutral Temperature – New Construction 4-15
4.5.4 Installing Maintenance CWR 4-15

4.5.5 Installation of Track Panels 4-15
4.5.6 Installation and Adjustment of Track Panels at Derailments 4-16
4.5.7 Laying Bolted Rail 4-17
4.6 Inside Guard Rails 4-17
4.7 Track Bolts 4-17
4.7.1 Track Bolt Sizes 4-17
4.7.2 Track Bolt Installation 4-17
4.8 Joint Bars 4-18
4.8.1 Installation of Joint Bars 4-18
4.9 Compromise Joint Bars 4-18
4.9.1 Offset ("Handed") Joints 4-19
4.9.2 Step ("Non-Handed") Joint Bars 4-19
4.9.3 Compromise/Transition Rails 4-19
A. 141/133# Compromise/Transition Rails 4-20
B. 136# to 115# Compromise/Transition Rails 4-20
4.9.4 141# to 136# Transition Rails 4-20
4.10 Rail Joints 4-21
4.10.1 Permanent Joints 4-21
4.10.2 Joint Placement and Support 4-22
4.10.3 Rail Joint Stagger 4-22
4.10.4 Joint Counting Definitions 4-22
4.10.5 Pull-Aparts 4-23
4.10.6 Rail Drilling 4-23
4.10.7 Rail Mismatch 4-25
4.10.8 Rail Joint Gap 4-25
4.11 Insulated Joints 4-26
4.11.1 Types and Applications 4-26
A. Long Angle Projection (LAP) Insulated Joints 4-26
4.11.2 Poly-Coated and Fiberglass Insulated Joints 4-27
A. Poly-Coated Insulated Joints 4-27
B. Fiberglass Insulated Joints 4-27
4.11.3 I-Bond Installation 4-27
4.12 Cutting Rail 4-27
4.13 Field Welding (Thermite) 4-28
4.14 Reinforcing Weld Straps 4-30
4.15 In-Track Welding 4-30
4.16 Weld Tolerance Specifications 4-31
4.17 Rail Anchors 4-32
4.17.1 Anchor Types 4-33
4.17.2 Anchor Applications 4-33
4.17.3 Anchor Installation 4-34
4.17.4 Standard Box Pattern 4-34
4.17.5 Solid Box Pattern 4-35
4.17.6 Bridge Pattern 4-35
4.17.7 Turnout Pattern 4-36
4.17.8 Transition Pattern 4-37
4.17.9 Adjustment and Maintenance of Rail Anchor Patterns 4-37
4.18 Rail Defects 4-37
4.18.1 Defect Descriptions 4-37
A. Bolt Hole Break (BH) 4-37
B. Broken Base (BB) 4-37
C. Crushed Head or Flattened Rail (CH or FR) 4-38
D. Shell, Sliver Corrugation (SSC) and Battered Weld SSC (SSC-W) 4-38
E. Defective Weld (DPW, DFW, DIW, DWG). 4-39
F. Engine Burn Fracture (EBF) 4-40
G. Head-Web Separation (HW) 4-40
H. Horizontal Split Head (HSH) 4-40
I. Ordinary Break / Sudden Rupture (SR) 4-40
J. Piped Rail (PR) 4-41
K. Split Web (SW) 4-41
L. Transverse Defects 4-41
M. A Detail Fracture (DF) 4-41
N. Vertical Split Head (VSH) 4-42
O. Signal Bond Drilled (SBD) 4-42
P. Signal Bond Thermite (SBT) 4-42
Q. Signal Bond Electric (SBE) 4-42
R. Damaged Rail (DMG-R) 4-42
S. Critical Curve Wear (CCW) 4-43

4.18.2 Rail Testing Frequency 4-43
4.18.3 Defect Marking and Minimum Rail Removal 4-43
4.18.4 Non-Certified Rail Test 4-44
4.18.5 Rail Repair and Maintenance Plug Rail Replacement 4-44
A. Follow these requirements for defects that can be removed without a rail change 4-44
B. Immediate Thermite welding 4-44
C. Cut and Drill for Joint Bar Application – Defect welding out planned 4-45
D. Welding out a defect where a single cut was made or joint bars only were applied 4-45
E. Main Line Maintenance Replacement Rails 4-45
4.18.6 Remedial Action Required 4-46
4.18.7 Maintenance Replacement Rail Certification 4-54
A. Rails certified by field maintenance personnel 4-54
B. Maintenance rail is certified in the field at designated locations 4-55
C. Certified plug rail purchased from outside parties 4-55
D. Marking 4-55
E. New or Service Failed Rail 4-57
4.18.8 Relaying Second Hand Rail Cascaded via Rail Trains 4-57
4.18.9 Passing Trains over Broken Rails or Pull-Aparts 4-57
4.18.10 Temporary Repairs to Broken Rails and Pull-Aparts to Pass Trains 4-58
4.18.11 Broken Rail and Derailment Reporting 4-58
A. Service Failure Broken Rail Reporting 4-58
B. Broken Rail Derailment Reporting 4-59
4.19 Rail Lubrication 4-59
4.19.1 Methods of Lubrication 4-59
4.19.2 Lubricants 4-59
4.19.3 Locations for Rail Lubrication Application 4-59
4.19.4 Suspension of Lubrication for Program Maintenance and Grinding 4-60
4.20 Rail Grinding 4-60
4.20.1 General 4-60
4.20.2 Corrective, Maintenance, and Preventive Grinding 4-60
4.20.3 When to Grind and Type of Grinding 4-61
4.20.4 Grinding Requirements 4-61
4.20.5 Classification of Rail Condition for Grinding 4-61
4.20.6 Preparation 4-61
4.20.7 Grinding on Bridges 4-61
4.20.8 Service Unit Requirements for Assisting Production Rail Grinding 4-62
4.20.9 Service Unit Requirements for Assisting Switch Rail Grinding 4-62

5.0 TURNOUTS

5.1 Turnout Identification 5-3
5.1.1 General 5-3
5.1.2 Turnout Types 5-4
A. Standard Wood 5-4
B. Premium Wood 5-4
C. Concrete 5-4
5.1.3 Turnout Construction 5-4
5.1.4 Speeds through Turnouts 5-4
5.2 Switches 5-5
5.2.1 Switch Types 5-5
A. Hand-Operated 5-5
B. Spring-Operated 5-5
C. Electric Lock 5-5
D. Dual Control 5-5
5.2.2 Switch Targets 5-5
5.2.3 Switch Stands 5-5
5.2.4 Switch Stand Adjustment 5-6
5.2.5 Switch Machines and Hollow Steel Ties 5-7
5.2.6 Switch Locks 5-7
5.2.7 Switch Point Locks 5-8
5.2.8 Switch Point Clamps 5-8
5.2.9 Switch Point Rollers 5-8
5.2.10Switch Point Guards 5-8
5.3 Switch Rods 5-9
5.3.1 Connecting Rods 5-9
A. Connecting Rod Length 5-9
B. Connecting Rod Repairs 5-9
C. Connecting Rod Installation 5-9
D. Spring Switch Buffer Rod 5-10

5.3.2 Connecting Rod Bolts 5-10
5.3.3 Switch Rod Use 5-10
5.4 Switch Points 5-10
5.4.1 Switch Point Use 5-10
5.4.2 Switch Point Maintenance 5-12
5.4.3 Heel Blocks 5-13
5.4.4 Stock Rails 5-14
5.4.5 Stock Rail Replacement 5-14
5.4.6 Stock Rail Use 5-15
5.4.7 Plating in Turnouts 5-15
5.5 Frogs 5-15
5.5.1 Identification of Frogs by Number 5-16
5.5.2 Frog Types 5-16
A. Railbound Manganese Frog (RBM) 5-16
B. Rigid Bolted Frog 5-16
C. Spring Frog 5-16
D. Solid Manganese Self-Guarded Frog (SMSG) 5-17
E. Movable Point Frog (MPF) 5-17
F. Jump Frog 5-17
G. Crossing Frog (Diamond) 5-18
5.5.3 Frog Wear Non-Conformal Frogs (RBM, SMSG, Jump and Diamonds) 5-20
5.5.4 Frog Wear Conformal Frogs (Heavy Point RBM) 5-20
5.5.5 Frog Guard Rail Size and Length 5-21
5.5.6 Frog Grinding and Slotting 5-21
5.5.7 Frog Bolt Sizes and Torque 5-21
5.5.8 Frog Bolt Installation 5-22
5.5.9 Frog Gage Plates 5-23
5.5.10 Guard Check Gage 5-23
A. Gage Settings for Standard Point Frogs 5-24
B. Gage Settings for Heavy Point Frogs 5-24
5.5.11 Jump Frogs 5-25
5.5.12 Welding Repair of Guard Rails, Frogs and Diamonds 5-26
5.5.13 Spring Frog Inspection and Maintenance Procedures 5-26
A. Frog Body 5-26
B. Handling 5-27
C. Surface and Line 5-27
D. Toe Area of Frog 5-27
E. Spring Wing 5-27
F. Horns and Hold Downs 5-29
G. Spring Box Assembly 5-30
H. Spring Replacement 5-30
I. Hydraulic Retarder 5-31
J. Retarder Replacement 5-32
5.5.14 Welded Spring Manganese (WSM) Frogs 5-32
5.5.15 Movable Point Frog Inspection and Maintenance 5-33
A. Frog Body 5-33
B. Surface and Line 5-33
C. Frog Point Bolts 5-34
D. Slide Plate 5-34
E. Point Wear 5-34
F. Lubrication 5-35
5.6 Turnout Maintenance 5-35
5.6.1 Switch Rods 5-35
5.6.2 Switch Points 5-35
A. Switch Point Throw 5-36
B. Switch Point Fit 5-36
C. Switch Point Wear 5-36
5.6.3 Frog and Guard Rails 5-37
5.6.4 Lubrication 5-37
5.6.5 Cleaning 5-38
5.6.6 Switch Heaters 5-38
5.6.7 Component Warranty 5-38
5.7 Derails – Permanent & Portable 5-38
5.7.1 Installation of Permanent Derails 5-38
5.7.2 Hinged or Sliding Derail Installation 5-39
5.7.3 Use of Portable Derails 5-40
5.8 Foul Point 5-41
6.0 RIGHT OF WAY AND OTHER FACILITIES
6.1 General 6-2
6.1.1 Loading and Unloading Material 6-2

6.1.2 Housekeeping 6-3
6.1.3 Property Damage 6-3
6.2 Vegetation Control 6-3
6.2.1 General 6-3
6.2.2 Chemical Herbicides 6-3
6.2.3 Clearing for Sight Distances 6-3
6.3 Fire Protection 6-4
6.4 Roadway Signs 6-4
6.4.1 General 6-4
6.4.2 Whistle Signs 6-5
6.4.3 Standard Highway Crossing Signs (Crossbucks) 6-5
6.4.4 Clearance Warning Signs 6-6
6.5 Roadways 6-6
6.5.1 Grade Crossings 6-6
A. General 6-6
B. Crossing Warning Devices (Passive/Active) 6-7
C. Crossing Drainage 6-7
6.5.2 Right of Way Roads 6-7
6.6 Fencing 6-7
6.6.1 Livestock 6-7
6.6.2 Snow 6-7
6.7 Bridges and Culverts 6-8
6.7.1 Bridge Identification 6-8
6.8 Environmental 6-9
6.8.1 Hazardous Material and Waste Spills 6-9
6.8.2 Illegal Dumping 6-10
6.9 Fiber Optics 6-10

7.0 TRACK BUCKLING PREVENTION GUIDELINES

7.1 Causes of Track Buckling 7-3
7.1.1 Explanations and Terminology 7-3
7.1.2 Critical Parameters That Influence Track Buckling 7-4
7.1.3 Maintenance Activities and Conditions That Impact Track Buckles 7-4
A. Lowered Neutral Temperature 7-4
B. Addition of Rail and Field Welds 7-4
C. Loss of Longitudinal Resistance 7-4
D. Reduced Lateral Resistance 7-4
E. Maintenance on Curves 7-5
F. Surface and Alignment Deviations 7-5
G. Dynamic Train Forces 7-5
H. Poor Train Handling 7-6
7.1.4 Locations Where Track Buckles are Likely to Occur 7-6
7.1.5 Track Buckle Occurrences 7-6
7.2 Track Buckling Preventive Maintenance Schedule 7-7
7.3 Monitoring Temperature 7-8
7.3.1 Ambient Temperature 7-8
7.3.2 Rail Temperature 7-8
7.3.3 Relationship between Ambient Temperature and Rail Temperature 7-8
7.4 Inspecting the Track Structure 7-8
7.4.1 Where Rail Could Have Been Added 7-8
7.4.2 Where Major Track Work Has Been Performed 7-8
7.4.3 Fixed Track Structures 7-8
7.4.4 Where Trains Could Cause Longitudinal Rail Movement 7-8
7.4.5 Track Geometry Problems 7-8
7.4.6 Insufficient Anchors and Fasteners 7-9
7.4.7 Ballast Conditions 7-9
7.5 Inspecting for Tight Rail Conditions 7-9
7.5.1 Lateral Rail Movement 7-9
7.5.2 Vertical Rail Movement 7-9
7.5.3 Longitudinal Rail Movement 7-9
7.5.4 Rail Maintenance Problems 7-10
7.6 Extreme Weather CWR Inspections 7-10
7.6.1 Hot Weather Inspections 7-10
7.6.2 Cold Weather Inspections 7-10
7.7 Placing Blanket Heat Restrictions 7-11
7.7.1 Level 1 Heat Restrictions 7-11
7.7.2 Level 2 Heat Restrictions 7-11

7.7.3 Blanket Cold Weather Restrictions 7-11
7.7.4 Removal of Blanket Heat Restrictions 7-12
7.8 Placing Temporary Speed Restrictions Account of Track Work....7-12
7.8.1 General Requirements 7-12
7.8.2 Consolidation of Ballast 7-12
7.8.3 Responsibility for Placing Speed Restrictions 7-13
7.8.4 Multiple Maintenance Operations on Same Track....7-13
7.8.5 Special Air Brake and Train Handling Requirements....7-13
7.8.6 Speed Restriction Length for Disturbed Track 7-13
7.8.7 Rail Temperature Thresholds 7-13
7.8.8 Speed Restrictions for Track Panel Installations....7-14
7.8.9 Newly Constructed Track/Switches 7-14
A. Rail Temperature is Below or Forecasted Below the "Rail Temperature Required for Speed Restriction Behind Track Work" for the Subdivision....7-14
B. Rail Temperature is At or Above the Forecasted "Rail Temperature Required for Speed Restriction Behind Track Work" for the Subdivision....7-14
7.8.10 Undercut, Sledded or Plowed Track 7-14
A. Rail Temperature is Below or Forecasted Below the "Rail Temperature Required for Speed Restriction Behind Track Work" for the Subdivision....7-14
B. Rail Temperature is At, Above or Forecasted Above the "Rail Temperature Required for Speed Restriction Behind Track Work" for the Subdivision....7-14
7.8.11 Tie and Surfacing Operations with Tie Installation....7-15
A. Rail Temperature is Below or Forecasted Below the "Rail Temperature Required for Speed Restriction Behind Track Work" for the Subdivision....7-15
B. Rail Temperature is At or Above the Forecasted "Rail Temperature Required for Speed Restriction Behind Track Work" for the Subdivision....7-15
C. Hot Weather Instructions for System Tie Gangs....7-15
D. General Instructions for System Tie Gangs....7-15
E. Pull Safe Requirements for Tie Gangs 7-16
7.8.12 Track Consolidation with Track Stabilizers 7-17
7.8.13 Rail Relays 7-17
7.8.14 Maintenance Surfacing 7-17
7.8.15 Ordinary Maintenance....7-17
General Requirements 7-17
A. Rail Temperature is Below or Forecasted Below the "Rail Temperature Required for Speed Restriction Behind Track Work" for the Subdivision....7-17
B. Rail Temperature is At or Above the Forecasted "Rail Temperature Required for Speed Restriction Behind Track Work" for the Subdivision....7-17
7.8.16 Summary of Speed Restrictions for Track Work 7-19
7.8.17 Slow Order Codes 7-20
7.9 Track Buckling Preventive Maintenance 7-20
7.9.1 Managing CWR Events....7-21
7.9.2 Placing Reference Marks....7-22
7.9.3 Placing Spanning Reference Marks....7-22
7.9.4 Placing Pull Back Reference Marks....7-23
7.9.5 Maintaining Desired Rail Neutral Temperature Range 7-24
7.9.6 Rail Neutral Temperature Re-adjustment....7-24
7.9.7 Cold Weather Rail Neutral Temperature Readjustment 7-25
7.9.8 De-Stressing Rail....7-26
7.9.9 Managing Cut-in/Cut-out CWR 7-26
7.9.10 Monitoring Curve Movement 7-27
A. Surveyors....7-27
B. System Gangs....7-27
C. Maintenance Forces 7-27
D. Procedures to Place Maintenance Stakes around Curves 7-28
E. Non Pre-staked Curves and Cold Weather 7-28
7.9.11 Inspecting for Curve Movement 7-28
7.9.12 Adjusting Curve or Placing Speed Restriction Account of Curve Movement....7-28
7.9.13 De-stressing Curves 7-29
7.9.14 Adjusting Anchors 7-30
7.9.15 Eliminating Joints....7-30
7.9.16 Gauging Track....7-30
7.10 Reporting Track Buckling Activities....7-30
7.10.1 Reporting Maintenance Work in CWR 7-30
7.10.2 Report Rail Service Failed Broken Rail 7-30
A. Service Failure Broken Rail Reporting....7-30
B. Broken Rail Derailment Reporting 7-31
7.10.3 Report Rail Pull-aparts....7-31
7.10.4 Report Maintenance Rail Replacement 7-31
7.10.5 Report Cut-in/Cut-out Maintenance Rail....7-31

7.10.6 Welding Gangs 7-31
7.10.7 Report Curve Movement 7-32
7.10.8 Reporting Track Buckling Incidents 7-32
7.10.9 Required CWR Documentation 7-32
7.10.10 Rail Laying Temperature for Continuous Welded Rail Table and Blanket Speed Restrictions 7-33

8.0 TRACK INSPECTION REQUIREMENTS

8.1 Scope 8-3
8.2 Standards and Compliance 8-3
8.3 FRA Qualified Personnel 8-3
8.3.1 FRA 213.7 Qualification (Class of Track 1-5) 8-3
8.3.2 FRA 213.305(a) Qualification (Class of Track 6) 8-4
8.3.3 FRA 213.305(b) Qualification (Class of Track 6) 8-4
8.3.4 FRA 213.305-Additional Qualification Requirements 8-4
8.4 Track Inspection Responsibilities 8-4
8.4.1 Chief Engineer 8-4
8.4.2 Director Track Maintenance 8-4
8.4.3 Director Track Maintenance Inspection Guidelines 8-5
8.4.4 Managers Track Maintenance 8-5
8.4.5 Manager Track Maintenance Inspection Guidelines 8-5
8.4.6 Inspector Evaluations 8-5

8.5 Track Inspector Responsibilities 8-6
8.5.1 Track Inspection Frequencies 8-6
8.5.2 Other Inspection Requirements 8-7
8.5.3 Track Inspector Documents 8-7
8.5.4 Track Inspection Vehicles 8-7
8.5.5 Track Inspector Tools 8-8
8.5.6 Track Inspection Playbooks 8-8
8.5.7 Track Inspection Reporting 8-8
8.5.8 Relief Track Inspections 8-8
8.5.9 Track Inspection FRA Defect Reporting 8-8
8.5.10 Track Inspection Reporting - TMP 8-9
8.5.11 Remedial Action Definitions 8-9
8.5.12 Excepted Track 8-9
8.5.13 Track Inspection Defect Management 8-10
8.6 Track Inspection Guidelines 8-10
8.6.1 Ballast 8-10
8.6.2 Drainage 8-10
8.6.3 Vegetation 8-10
8.6.4 Gage 8-10
8.6.5 Geometry 8-11
8.6.6 Crossties 8-11
8.6.7 Rail Defects 8-11
8.6.8 Rail End Mismatch 8-11
8.6.9 Rail Joints 8-11
8.6.10 Joint Bar & Insulated Joint (IJ) Inspection Frequency 8-11
8.6.11 CWR Joint Bar Inventory 8-12
8.6.12 FRA Joint Bar Fracture Reporting in CWR 8-12
8.6.13 CWR Joint Bar Conditions 8-13
8.6.14 CWR Joint Inspections at Turnout Locations 8-13
8.6.15 Insulated Joint Bar Inspections 8-14
8.6.16 Compromise Rail Joint Inspections 8-14
8.6.17 Torch Cut Rail 8-14
8.6.18 Tie Plates 8-14
8.6.19 Rail Fastenings 8-14
8.6.20 Road Crossings 8-14
8.6.21 Bridges 8-15
8.6.22 Main Line Curves 8-15
8.6.23 Critical Lead Inspection and Maintenance Criteria 8-15
8.7 Turnout Inspection Guidelines 8-16
8.7.1 Switch Stand 8-16
8.7.2 Connecting Rod 8-16
8.7.3 Switch Points 8-16
8.7.4 Switch Point Throw 8-16

8.7.5 Switch Point Fit 8-17
8.7.6 Switch Point Wear 8-17
8.7.7 Switch Point Guards 8-17
8.7.8 Stock Rails 8-17
8.7.9 Switch Rods 8-17
8.7.10 Switch Plates 8-17
8.7.11 Heel Blocks 8-17
8.7.12 Frogs 8-18
8.7.13 Spring Frogs 8-18
8.7.14 Self-Guarded Frog 8-18
8.7.15 Guard Rails 8-18
8.7.16 Gage 8-18
8.7.17 Cross Level 8-18
8.7.18 Surface 8-18
8.7.19 Alignment 8-19
8.7.20 Inspect Switch Ties 8-19
8.7.21 Rails 8-19
8.7.22 Rail Anchors 8-19
8.7.23 Ballast 8-19
8.8 Annual Switch Inspections 8-19
8.8.1 Switch Health Rating 8-19
8.8.2 Annual Switch Inspection Responsibilities 8-19
8.8.3 Switch Inspection Guidelines 8-19
8.9 Special Inspections 8-20
8.9.1 Special Inspector Qualifications 8-20
8.9.2 Training 8-20
8.9.3 Identification of Structures 8-20
8.9.4 Notification Procedures 8-20
8.9.5 Initial Notification 8-20
8.9.6 Notifying Train Crews 8-20
8.9.7 Notifying Maintenance-of-Way Employees 8-21
8.9.8 Special Inspections—General Requirements 8-21
8.9.9 Performing Special Inspections 8-21
8.9.10 Special Inspections-Storms, Floods, Washouts, Mud/Rock Slides 8-21
8.9.11 Special Inspections—Right-of-Way Fires 8-22
8.9.12 Special Inspections—Earthquakes 8-22
8.9.13 Special Inspections - Hot Weather Inspections 8-23
8.9.14 Special Inspections - Cold Weather Inspections 8-23
8.10 FRA Inspection Guidelines 8-23
8.10.1 Identifying Exceptions - Defects 8-23
8.10.2 Identifying Exceptions - Violations 8-23
8.10.3 Violation Penalties 8-23
8.10.4 FRA Reports 8-24
8.10.5 FRA Report- Railroad Follow-Up Instructions 8-24
8.10.6 FRA Report - Violations 8-24
8.10.7 FRA Violation Investigation Procedures 8-24
8.10.8 FRA Requests for Information 8-25
8.10.9 FRA Electronic Inspection Record Review Guidelines 8-25
8.10.10 Signal Inspection Intervals and Record Keeping 8-25
8.11 Required Field Documentation – FRA Compliance 8-25
8.12 Derailment Investigation 8-25
8.13 Track Maintenance Planner - Engineering Defect Management Guidelines 8-25

GLOSSARY GLOSSARY-1

APPENDIX APPENDIX-1

INDEX INDEX-1

What is updated in the 2015 ETMFH? *Chapters 1-3*

2014 Engineering Track Maintenance Field Handbook Updates				
Section	**Page**	**Section Title**	**Update**	**Application**
1.6.4	1-10	Distribution	Ballast distribution update.	Plow tie to be used when unloading heavy amounts of ballast not just during new construction.
2.0		Geometry Changes	Limit charts have been updated.	Priority limits for classses 1 through 6 have been removed from the book.
2.3.3	2-7	Measuring Gage	Base gauge limits have been added.	Base gauge limits added.
2.3.4	2-7	Gage Limits	Table 2-1 Urgent Limits for tight gage removed.	Urgent Tight Gage has been removed.
2.4.4	2-11	Minimum Clearances	Standard Drawing number and top of rail clearance.	Standard Drawing 0038I referenced and clearance changed from 24' to 23'4".
2.6.2	2-14	Measuring Warp (twist)	Max warp in 6" elevated curves.	Max warp in 6" elevated curves updated to 1-1/2".
2.6.5	2-16	Track Surface Limits	Class 6 geometry tolerance update.	Class 6 deviation from zero crosslevel is now 15/16".
2.6.11	2-23	Surfacing at Signal Detectors	Surfacing operations updated.	Instructions on surfacing at signal detectors added to the book.
2.7.2	2-24	VTI Thresholds	Low Priority removed.	Low Priority removed.
2.8.4	2-26	Track Evaluation Car PBTG …	Instructions on PBTG mainteance items.	Verify PBTG mainteance items within 7 days.
3.1.1	3-3	Types and Applications	Wood tie table update.	9' wood ties were removed from the table due to standard change.
3.1.1	3-3	Types and Applications	Tie usage clarification note added.	Do not intermix wood ties with concrete ties to make permanent repairs.
3.1.1	3-3	Types and Applications	Road crossing tie usage updated.	Number of vehicles per road crossing back to 200 vehicles/day for concrete ties.
3.1.1	3-3	Types and Applications	Link to daily traffic count added.	Ability to determine daily traffic count at specific crossing.
3.1.1	3-4	Types and Applications	Composite ties	Composite ties cannot be gaged, must replace the tie.
3.1.1	3-4	Types and Applications	Update to the tie types and applications.	Borate ties added to the types of ties list.
3.1.2	3-5	Installation and Spacing	Clarification on spiking new tie installations added.	Ties may be spiked to standard base gage on the first pass due to curve worn rail.
3.1.10	3-11	Program Mntce. for Wood Ties	Personnel titles adjusted.	Accurate description of personnel.
3.1.13	3-14	Maxim. Number of …	Note added to table 3-P-2.	Standard track geometry and gage requirements still must be maintained.
3.2.9	3-24	CRSD	CRSD slow order update.	Installed on every 4th tie in tangent track up to 2 degrees and every other tie in curves over 2 degrees for a 25 MPH slow order. Speed depends on severity of tie damage.
3.2.9	3-24	CRSD	Installation note added.	If the system is loose, it is not installed correctly.
3.6	3-39	Tie Maintenance	Tie maintenance requirements added.	Section from the 2007 version added back in.
3.6.1	3-39	Wood Tie Identification	Pictures added to help identify tie location.	Year, Location, Treatment type.

*These updates and enhancements are highlighted in grey throughout the Engineering Track Maintenance Field Handbook (ETMFH).
*Please email ETMFH@up.com if you have any changes to propose.

What is updated in the 2015 ETMFH? *Chapters 4-8*

2014 Engineering Track Maintenance Field Handbook Updates				
Section	**Page**	**Section Title**	**Update**	**Application**
4.3.4	4-9	Curve Rail Wear Limits	Note added for curves over 3 degrees on 8 exception subdivisions.	Curves with 5/8" gage face wear or greater will be considered for replacement in listed subdivisions.
4.5.3	4-15	Laying CWR - New Construction	Laying CWR to Proper Neutral Temperature - New Construction added.	Section from the 2007 version added back in.
4.5.6	4-16	Track Panels	Panel installation rail neutral temperature adjustment simplified.	Use the rail temperature that was recorded at the time of the derailment as the RNT for the panelized section.
4.7.2	4-17	Track Bolt Installation	Track Bolt Installation requirements added.	Section from the 2007 version added back in.
4.9.3	4-20	Comp/Transition Rails	Table added.	Available Comp/Transition rails table added with item numbers.
4.10.8	4-25	Rail Joint Gap	Table 4-L updated for clarification.	Rail joint gaps reverted back to 2007 standards.
4.15	4-30	In-Track Welding	Note added to 4.15.5	Note on timing for abrasive rail saw use.
4.17.5	4-35	Solid Box Pattern	Table 4-P updated for clarification.	Solid box anchoring rules listed for special track components and structures by tie type.
4.18.1	4-43	Defect Descriptions	Critical Curve Wear (CCW) added.	Description, pictures and slow order requirement added for CCW.
4.18.2	4-43	Rail Testing Frequency	Minimum rail test frequency table added.	Table added for reference.
4.18.5	4-46	Rail Repair and Maintenance Plug...	6" base updated.	6" based updated to 133# and 136# rail sections.
4.18.6	4-47	Remedial Action Required	Bolt hole defect sizes changed and Flattened Rail clarification.	Table 4-R updated.
4.18.7	4-56	Maintenance Replacement Rail ...	Note added on change to FRA rule 213.237 (c).	
4.18.7	4-57	Maintenance Replacement Rail...	6" base updated.	6" based updated to 133# and 136# rail sections.
4.19.4	4-61	Rail Lubrication	Clarification of lubrication suspension due to program maintenance.	List of programs that require discontinuation of lubrication added.
4.20.9	4-63	Service Unit Requirements...	Notes 7. and 8. added to SU rail grinding support.	Instructions for road crossings and tie-up for rail grinder.
5.5	5-20	Frogs	Full flange bearing diamond added.	Full flange bearing diamond added to list of diamonds with usage.
5.5.6	5-22	Frog Bolt Sizes and Torque	Torque for 1-3/8" bolts raised to 2,200 ft/lbs from 2,000 ft/lbs.	This is the recommended torque from the bolt manufacturers and the track work suppliers.
5.5.7	5-22	Frog Bolt Installation	Frog nut and washer information updated.	New Lock Nuts and Cam Washer information added and instructions on diamond torquing contact.
5.5.13	5-33	WSM Frogs	WSM Inspections updated.	Inspect WSM welds during normal switch inspection.
5.9	5-41	Frog Grinding and Slotting	Frog Grinding and Slotting requirements added.	Section from the 2007 version added back in.
7.8.11	7-15	Tie and Surfacing Operations with ...	Speed restrictions after tie or surfacing operations updated.	Below rail temperature is now a F-1 and not a F-X.
7.8.14	7-17	Maintenance Surfacing	Maintenance surfacing defined.	Maintenance surfacacing defined.
7.8.15	7-17	Ordinary Maintenance	Ordinary Maintenance update.	Ordinary tie maintenance is now defined.
7.8.16	7-18	Speed Restrictions	Speed restrictions after tie or surfacing operations table updated.	Below rail temperature is now a F-1 and not a F-X in the table.
8.4.6	8-5	Inspector Evaluations	Updated to reflect TMP.	Updated to reflect TMP and where to find in the TMP.
8.12	8-25	Derailment Investigation	Instructions on how to get to derailment investigation system.	
8.13	8-25	Track Maintenance Planner...	Defect Management guidelines added.	Defect closure codes in the TMP.

*These updates and enhancements are highlighted in grey throughout the Engineering Track Maintenance Field Handbook (ETMFH).

*Please email ETMFH@up.com if you have any changes to propose.

1.0 ROADBED

1.1 Cross Section 1-2

1.2 Drainage 1-2
1.2.1 General Considerations 1-2
1.2.2 Grade 1-2

1.3 Surface Drainage 1-2
1.3.1 Ditch Construction and Maintenance 1-2
1.3.2 Culverts 1-3
1.3.3 Grade Crossing Drainage 1-3
A. Surface Drainage at Grade Crossings 1-3
B. Surface Drainage at Multiple Grade Crossings 1-4
C. Subsurface Drainage at Grade Crossings 1-4
D. Removal From Service 1-4
1.3.4 Culvert Installation 1-5
1.3.5 Culvert Identification 1-5
1.3.6 High Water Levels 1-5
1.3.7 Berms and Levees 1-5
1.3.8 Erosion Control 1-5

1.4 Subsurface Drainage 1-5
1.4.1 Perforated Pipe 1-6
1.4.2 Engineering Fabric 1-7

1.5 Stability 1-7
1.5.1 Heaving and Soft Track 1-7
1.5.2 Embankment Stability 1-8
A. Unexpected Embankment Settling or Failure 1-8
1.5.3 Borrow Pits 1-8

1.6 Ballast 1-9
1.6.1 Purpose 1-9
1.6.2 Ballast Section 1-9
1.6.3 Sources and Gradation 1-10
1.6.4 Distribution 1-10
1.6.5 Stock Piling 1-11
1.6.6 Ballast Car Release 1-11
1.6.7 Spot Maintenance 1-11
1.6.8 Program Maintenance 1-12

1.0 Roadbed

1.1 Cross Section

Maintain roadbeds, embankments, and excavations according to Standard Drawing Nos. 0001, 0002 and 0003, when practical.

1.2 Drainage

1.2.1 General Considerations

Roadbed drainage is the most important component of good track maintenance. To achieve proper drainage that diverts water away from the track, either direct the water parallel to and/or across the roadbed, or intercept and divert the water before it reaches the roadbed. To provide adequate drainage, consider the following:

- Maximum expected runoff from rain, melting snow, or other sources
- Track and roadbed conditions that will develop during freezing temperatures

Follow these requirements:

1. Keep water-carrying devices clear of debris to make sure that water can flow freely. Notify the Manager Track Maintenance if obstructions outside the railroad right of way interfere with water flow.
2. During heavy rainfall or runoff, monitor water-carrying devices to make sure they handle the flow of water. Enlarge any devices that cannot handle the water flow. Report such devices to the Manager Track Maintenance.
3. Do not allow adjacent land owners or other parties to divert water from their property into existing water-carrying devices or to construct such devices on the railroad right of way. Immediately report such activities to the Manager Track Maintenance.

1.2.2 Grade

The slope of the grade adjacent to the track structure directs water away from the track toward natural or man-made water-carrying devices.
Follow these requirements to ensure the correct grade:

1. Construct and maintain subgrade to a 2% cross slope. Ditches, subsurface drains, perforated pipe, rock drains, or other water-carrying devices should be installed and maintained at a minimum slope of 3 inches in every 100 feet of length.
2. When water-carrying devices run parallel to the track, make sure they conform to whichever of the following requirements is **greater**:
   - The requirements in step 1 above
   - The established grade of the track

1.3 Surface Drainage

1.3.1 Ditch Construction and Maintenance

IMPORTANT: At least 48 hours before performing work, call Union Pacific's *Call Before You Dig* hotline (800-336-9193) to determine if there are any fiber optic cables or other utilities in the work area.

After the UPRR Hotline has been contacted, each State has a one-call hotline that must also be contacted at least 48 hours before performing any work. Call the North American One Call Referral System (888-258-0808) to obtain the appropriate state one-call number. Call the state one-call center, who will notify all utility owners within the work area.

***Do not* begin excavation or construction along the railroad's right-of-way until all utilities in the work area have been located and protected by their owners.**

Follow these requirements when constructing and maintaining ditches:

1. Maintain side ditches that parallel the track to a depth of 3 feet below the top of the subgrade as shown in Figure 1-A.
2. Maintain ditches in earthen soils with a flat bottom as shown in Figure 1-A.

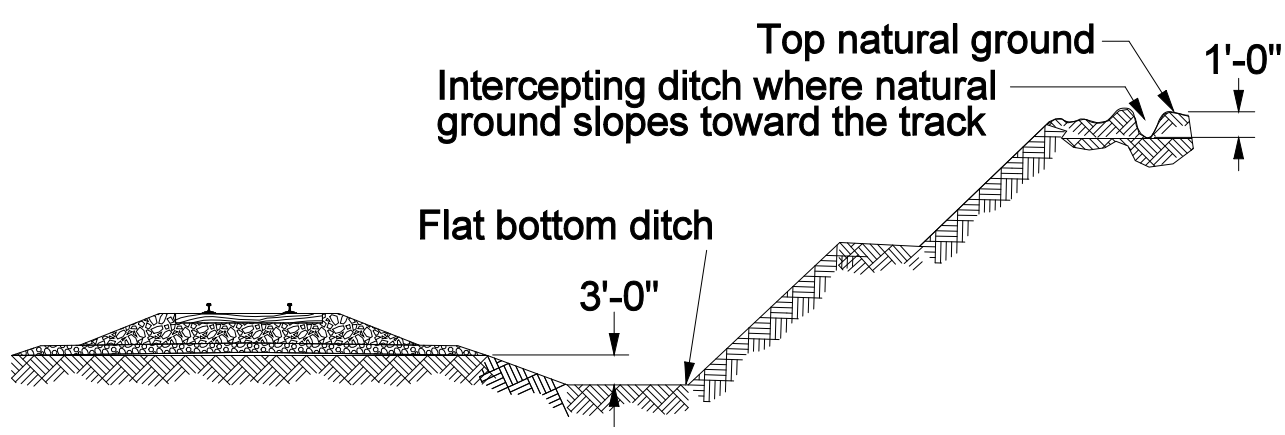

Figure 1-A

3. Maintain intercepting ditches to a minimum depth of 1 foot on top of slopes through deep cut sections where runoff from higher elevation erodes slopes as shown in Figure 1-A.
4. Direct the outlet ends of ditches away from the track structure to prevent erosion to ditches or the roadbed.
5. Cut ditches through heavy snow wherever a sudden thaw could cause excessive runoff toward the track structure.

NOTE: If grading or disturbing the soil will affect 1 acre or more; construction permits are required. Consult the Environmental Policy Guide prior to performing work to ensure that all requirements are met. Direct questions about grading/dirt work affecting storm water run-off to the Environmental Engineering Group.

1.3.2 Ditch Cleaning

Follow these requirements when cleaning ditches:

1. Start removing waste material from the outlet or bottom end of the ditch.
2. Whenever possible, use removed material to widen narrow embankments or replace material eroded from the roadbed.
3. When placing material on an embankment, distribute it evenly on the face of the slope by terracing up from the base of the fill.
4. When removing waste material from ditches, do **not** put it in the following locations:
   - On the slopes of cuts or other locations where it will wash back into the ditch or track
   - On the right of way where it will obstruct natural roadbed drainage
   - On the track's ballast section
5. When disposing of removed earthen material:
   - Grade it smoothly.
   - Do not raise shoulders above the existing subgrade.
6. If the waste material could be environmentally dangerous:
   - Isolate the waste material from the waterway.
   - Cover the material with plastic.
   - Get advice from the environmental representative on how to dispose of the material.

1.3.3 Culverts

Follow these requirements to ensure that culverts provide adequate drainage:

NOTE: Ensure the cover thickness over the top of the culvert to the bottom of the tie is at least one-half the thickness of the culvert diameter.

1. Keep culverts clear of obstructions at all times.
2. Make sure there are enough culverts and they are large enough to handle the maximum anticipated water flow.
3. If the roadbed appears to block the flow of water from one side of the track to the other, consider installing additional or larger culverts.
4. When a washout occurs during heavy runoff, determine whether existing devices are obstructed.
   - If they are, remove the obstructions.

     or
   - If they are not, install additional or larger culverts.

1.3.4 Grade Crossing Drainage

A. Surface Drainage at Grade Crossings

Follow these requirements to establish surface drainage at grade crossings:

1. Make sure that the first or second fully exposed tie crib off each end of a grade crossing has ballast removed for its entire length to a depth even with the bottom of the ties. See Figure 1-B.

NOTE: Box anchor wood ties next to all open cribs.

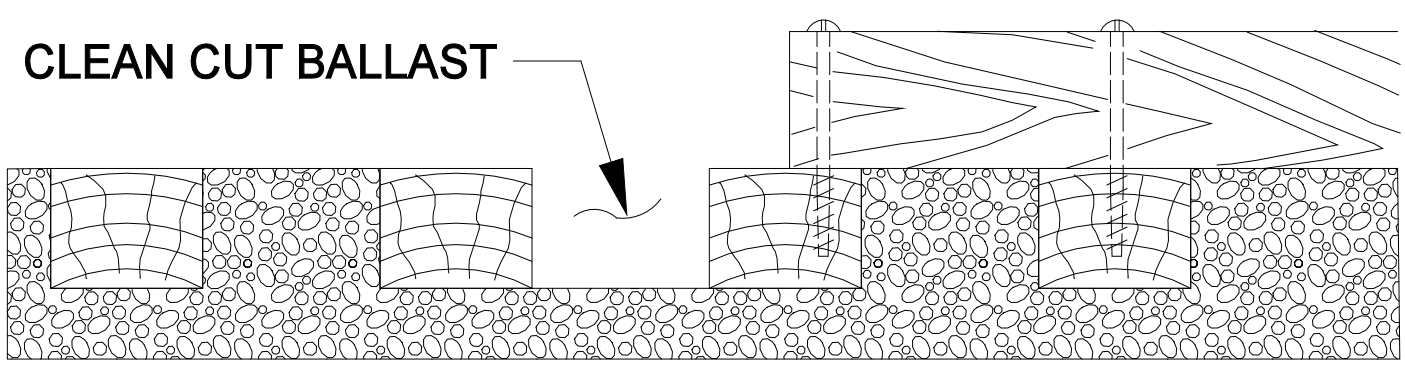

Figure 1-B

2. Slope trenches leading away from the end of each open tie crib on the four corners of the crossing to allow water to drain from the track.

B. Surface Drainage at Multiple Grade Crossings

Follow these additional requirements to establish surface drainage at multiple track grade crossings:

1. Make sure that open tie cribs line up in a straight line with adjacent tracks.
2. Trench between tracks to connect the open tie cribs as one continuous trench as shown in Figure 1-C.
3. Where the roadway does not cross the track at right angles, connect the open tie cribs as shown in Figure 1-D.

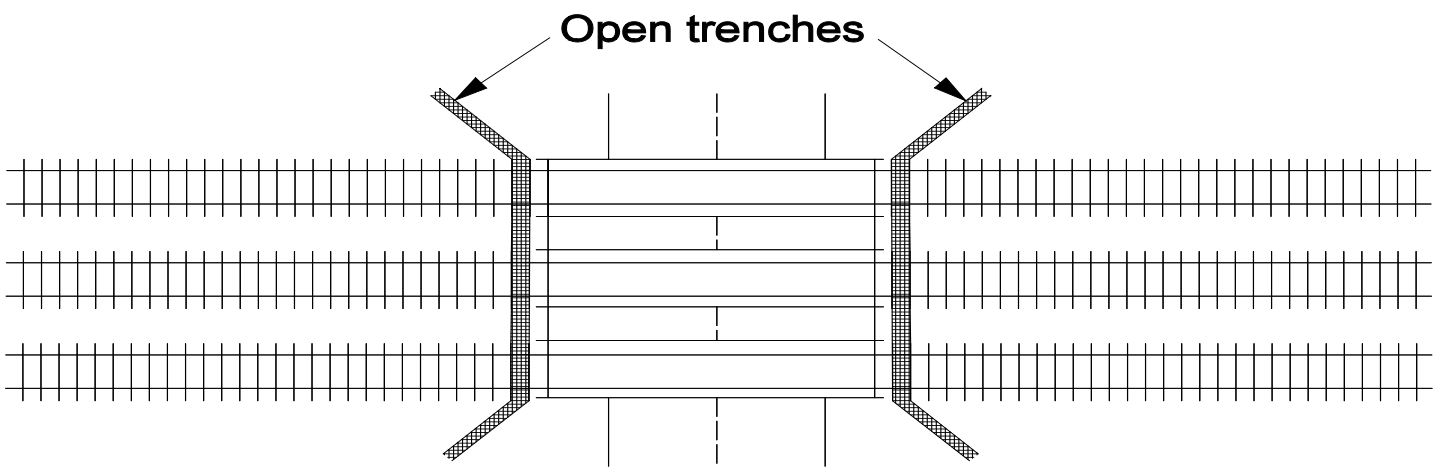

Figure 1-C

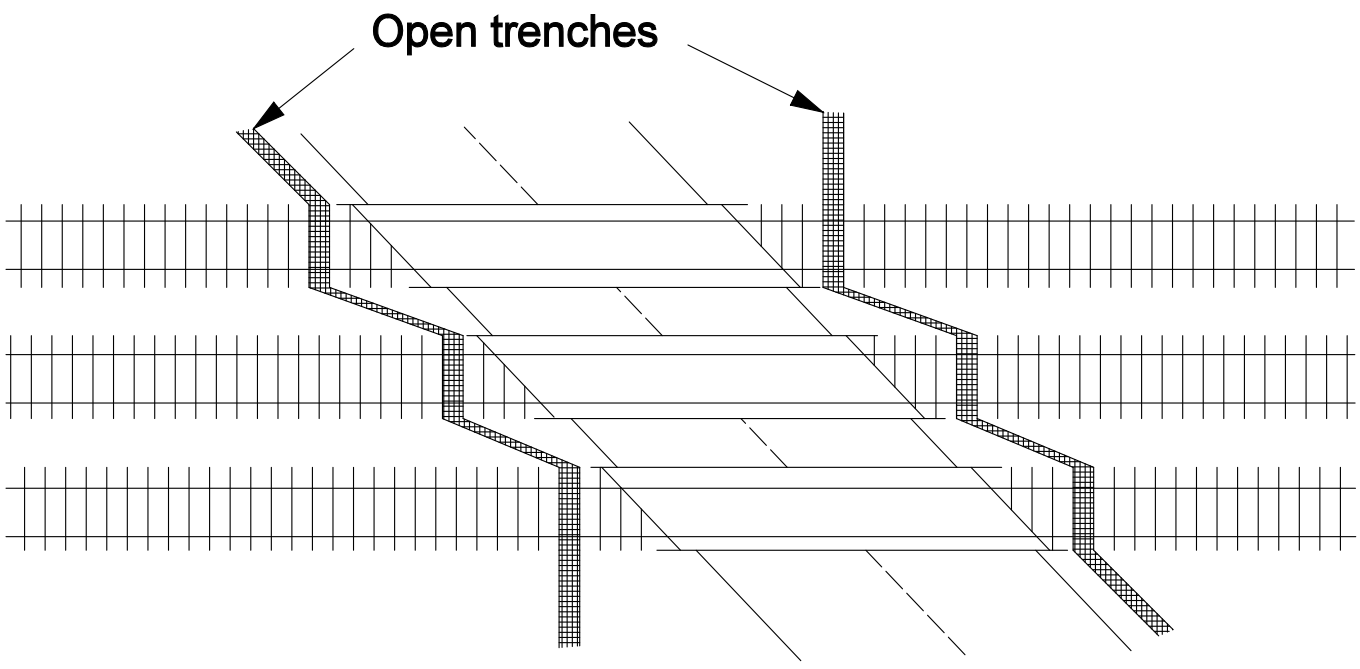

Figure 1-D

C. Subsurface Drainage at Grade Crossings

Follow these requirements to establish subsurface drainage at grade crossings:

1. Excavate trenches in the subgrade from the four corners of a grade crossing. Use a slope that provides drainage from the lowest point dug out when cross ties are renewed as shown in Figure 1-E.
2. Backfill trenches with clean ballast to a height even with the subgrade.

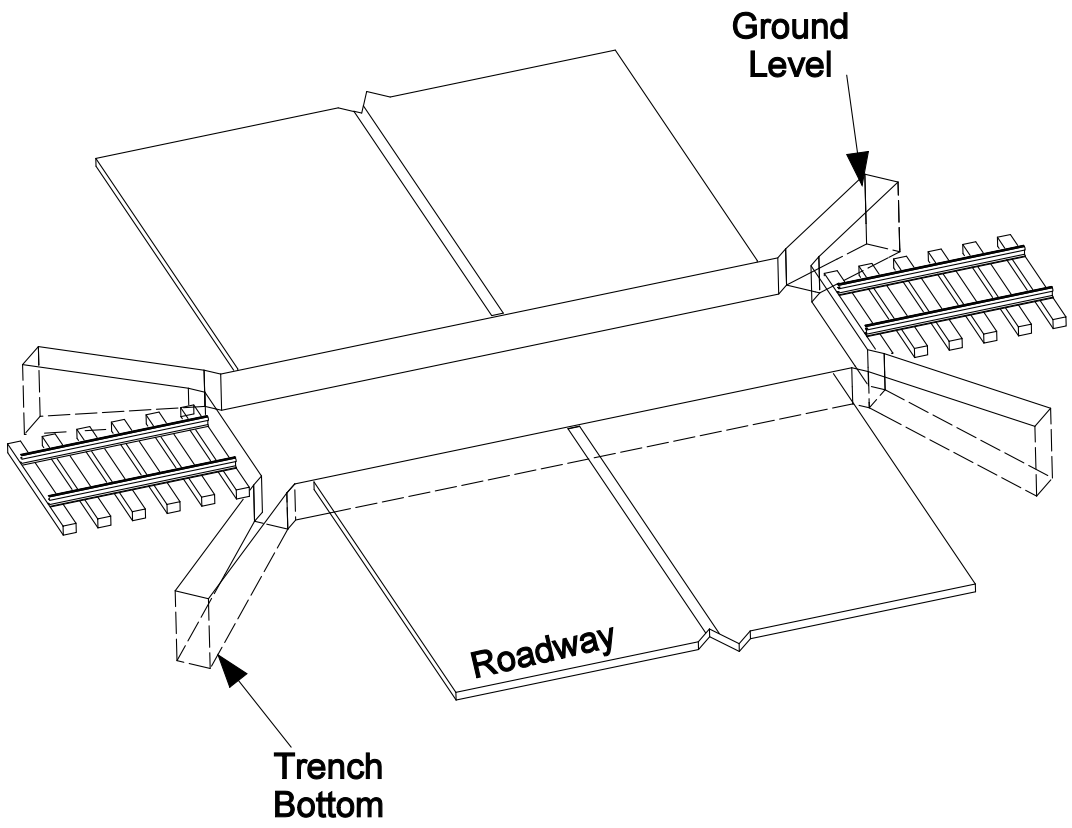

Figure 1-E

D. Removal From Service

Follow these requirements when retiring grade crossings from service:

1. Remove roadway approaches to grade crossings for at least 20 feet from the centerline of the track.
2. Contour the roadbed for drainage according to Standard Drawing Nos. 0001, 0002 and 0003.

1.3.5 Culvert Installation

The Track Department inspects and maintains culverts less than 48 inches in diameter.

1. When the open cutting method of installation is used, UPRR trenching and shoring standards must be complied with. Refer to CE Bulletin 124.0.
2. Establish flow line elevations to ensure proper drainage. Outlet elevation must be lower than inlet elevation.
3. Bedding for pipe needs to be an engineered select material (i.e. approved road base material) and well compacted in place.
4. If continuous length pipe cannot be used and the use of bands and/or connectors would be needed consult the Manager Bridge Maintenance for proper material and procedures.
5. Backfill pipe evenly with a select, compactable material.

1.3.6 Culvert Identification

All culverts on main tracks or industrial leads less than 48 inches in diameter must be identified per the following guidelines.

1. Tie closest to the center of a culvert location to be painted blue. In locations with multiple culverts, tie closest to the center of the culvert group is to be painted.
2. Krylon OSHA blue paint to be utilized to paint tie. Paint can be ordered in one gallon buckets in e-procurement item number 353-1450.
3. Entire exposed top surface of the tie to be painted. Do not paint the plates or rail.

1.3.7 High Water Levels

Follow these requirements at locations where water passes under the track structure during high water flow:

1. Take measurements at bridges, culverts, and other locations where water passes through the track at unusually high levels.
2. Record the distance between the surface of the water flow and the bottom of the track structure.
3. Report this information to the Manager Track Maintenance.

1.3.8 Berms and Levees

Construct and maintain berms or levees to divert water away from the roadbed or toward water-carrying devices in areas with high runoff.

1.3.9 Erosion Control

Follow these requirements to control erosion:

1. Seed embankments or other locations graded on the right of way with native grasses.
2. Use an apron of concrete or rock to protect the outlet ends of perforated pipes that direct water onto embankments.
3. Do not excavate material from the slopes of embankments.
4. Place rock or riprap at locations where material is being eroded and the water flow cannot be slowed or diverted.
5. When selecting the best size of material for controlling erosion, consider the following:
   - The amount and force of the water the material will be exposed to.
   - The equipment available for handling the material after it is unloaded.

See Table 1-A for stock materials for erosion control.

Stock Materials for Erosion Control	
Size	**Description**
2 to 5 in.	B stone
12 in. minus	A stone
4” x 12” minus	Class 1 riprap
12” x 24” minus	Class 2 riprap
24” x 36” minus	Class 3 riprap
36” x 36” minus	Class 4 riprap

Table 1-A

1.4 Subsurface Drainage

Install underground drainage systems in locations where side ditches cannot be effectively maintained, such as wet or narrow cuts, tunnels, station platforms, or yard tracks.

Follow these requirements to install devices for subsurface drainage:

1. When laying pipe as part of a subsurface drainage system, place the pipe at true grade so that the pipe outlet will drain water away from track structure.
2. When installing catch basins, risers, or manholes that are tied to drainage systems, set them at an elevation to adequately drain the intended area.

3. Place subsurface drainpipe at least 18 inches (where practicable) below ground level or the bottom of the rail.
4. When placing pipe into an excavated ditch:
   - Line the bottom of the ditch with compacted material.
   - Place the pipe on top of the compacted material and center it between the ditch sidewalls.
   - Backfill the ditch entirely with coarse ballast and place at least 24 inches of ballast (where practicable) on top of the pipe.

1.4.1 Perforated Pipe

Install perforated pipe in road crossings according to Standard Drawing Nos. 0301 and 0304 where required by contract agreement with public agencies or as otherwise provided in project plans. See Figure 1-F for the single track arrangement for drainage pipe installation and Figure 1-G for the double track arrangement for drainage pipe installation.

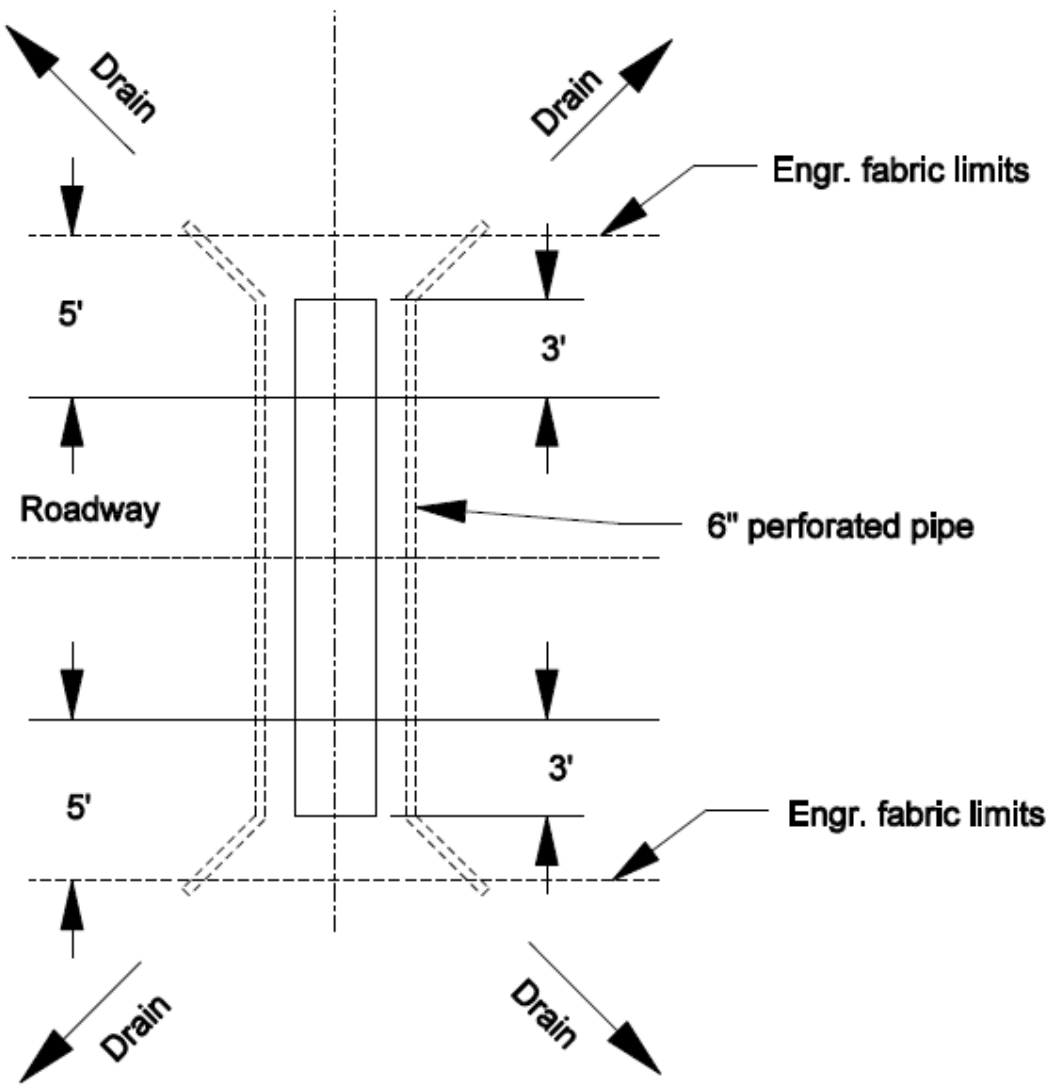

Single track arrangement for drainage pipe installation

Figure 1-F

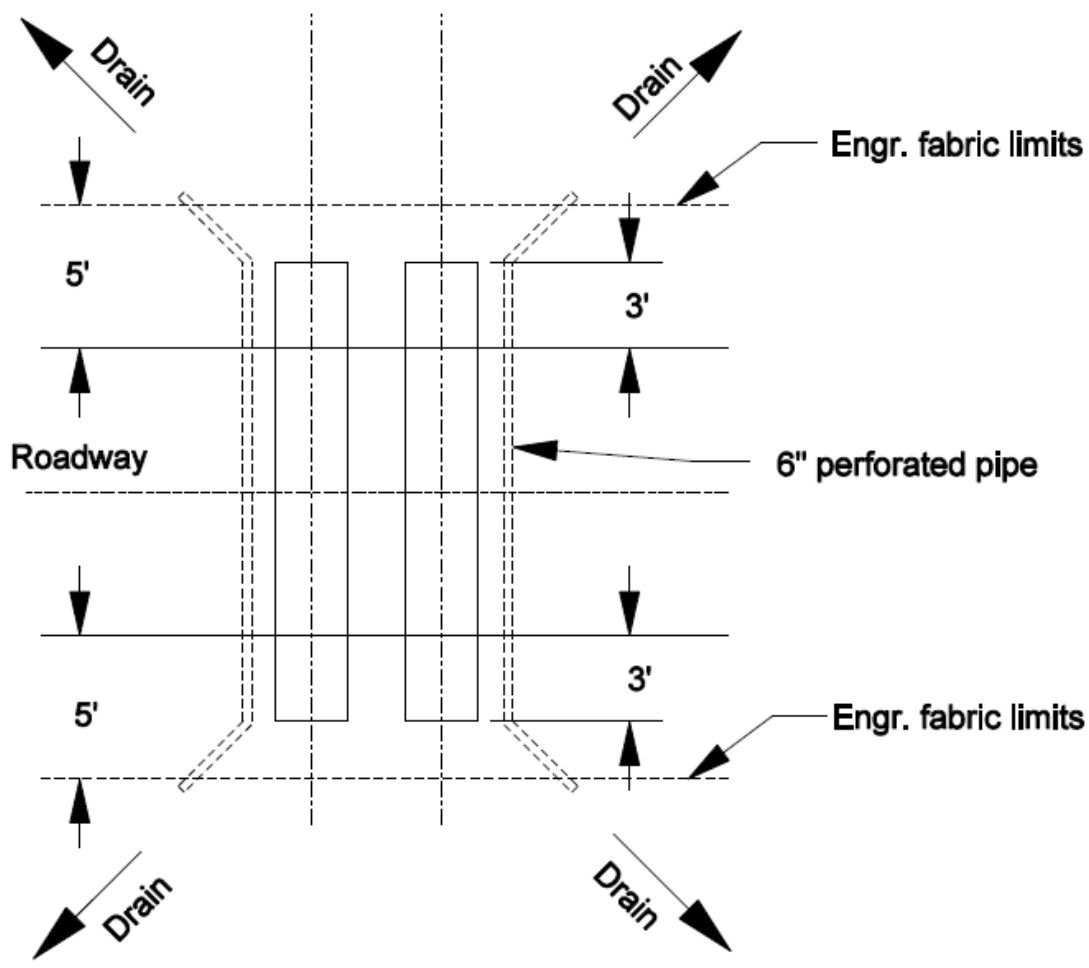

Double track arrangement for drainage pipe installation

Figure 1-G

Follow these requirements to install perforated pipe for subsurface drainage:

1. Make sure that connectors and elbows are the proper size and dimension for connecting standard length pipe sections.
2. Wrap perforated pipe in engineering fabric before installing it.
3. Place perforated pipe with the perforations facing down.
4. Keep perforated pipe ends clear of debris.
5. When burying perforated pipe beneath track to drain water laterally, wrap the open end of the pipe with engineering fabric.

6. Ensure that pipe outlets are installed at proper grade to allow water to flow away from crossing.

NOTE: You may install perforated pipe to supplement rock drains. Backfill all pipe installations with coarse ballast to restore the roadbed to its original profile.

1.4.2 Engineering Fabric

Install engineering fabric in road crossings according to Standard Drawing Nos. 0301 and 0304 where required by contract agreement with public agencies or as otherwise provided in project plans. Place engineering fabric at ground level as shown in Figure 1-H and extend it past the crossing panels as shown in Figure 1-F or 1-G.

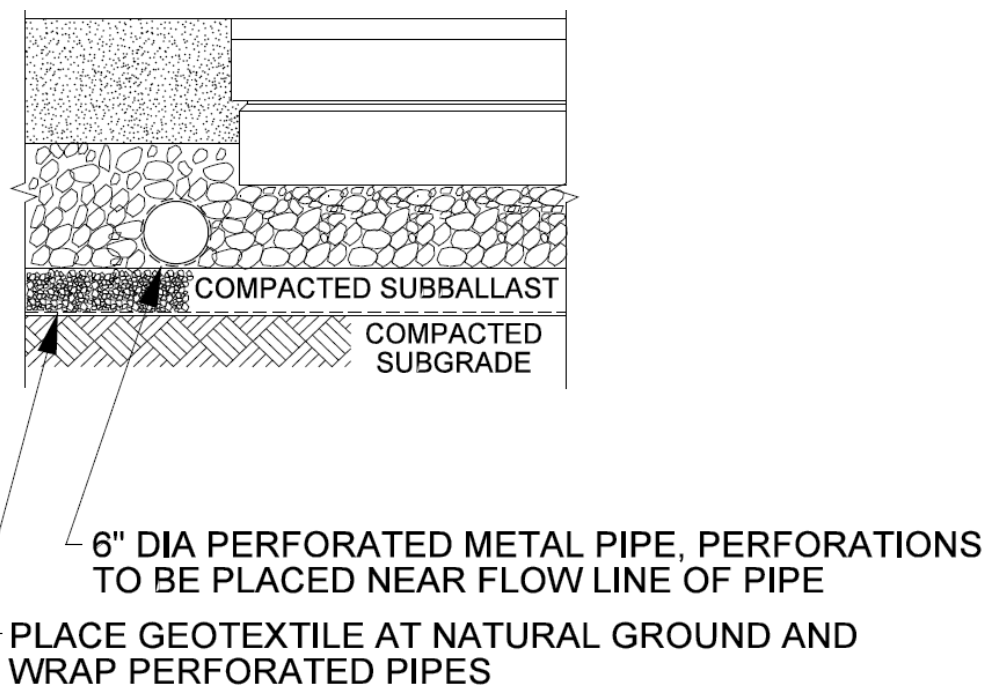

Figure 1-H

Follow these requirements to install engineering fabric for subsurface drainage:

1. Before applying engineering fabric, make sure the roadbed grade is free of sharp rocks and other debris.
2. Be careful not to puncture the fabric during or after installation.
3. Install engineering fabric at least 9 inches below the bottom of ties to keep it from being punctured by automatic tamper tools during insertions.
4. Do not install engineering fabric in multiple layers, except where required to overlap seams.
5. Overlap seams 2 feet when starting a new roll.
6. Before backfilling, stretch engineering fabric tightly to remove wrinkles.

NOTE: Do not use engineering fabric in place of adequate drainage devices or grading.

1.5 Stability

1.5.1 Heaving and Soft Track

Rock drains, or trench drains, may be constructed in place of other subsurface drainage systems to correct heaving and soft track according to Standard Drawing No. 0007. These drains provide a way for trapped water to drain away from the roadbed. The use of perforated pipe is optional.

Follow these requirements to construct rock drains:

1. Construct rock drains by excavating roadbed material and backfilling with coarse ballast.
2. Cut lateral rock drains at intervals of 20 to 50 feet.
3. Make sure the rock drain has an outlet for releasing accumulated water.
4. In cut sections of the roadbed:
   - Excavate rock drains parallel to the track on one or both sides.
   - Make excavations for the full length of the wet ground.
   - Make excavations that meet the following specifications:
     - 1 to 3 feet wide.
     - At least 15 inches below the bottom of the water pocket or frost line as shown in Figure 1-I.

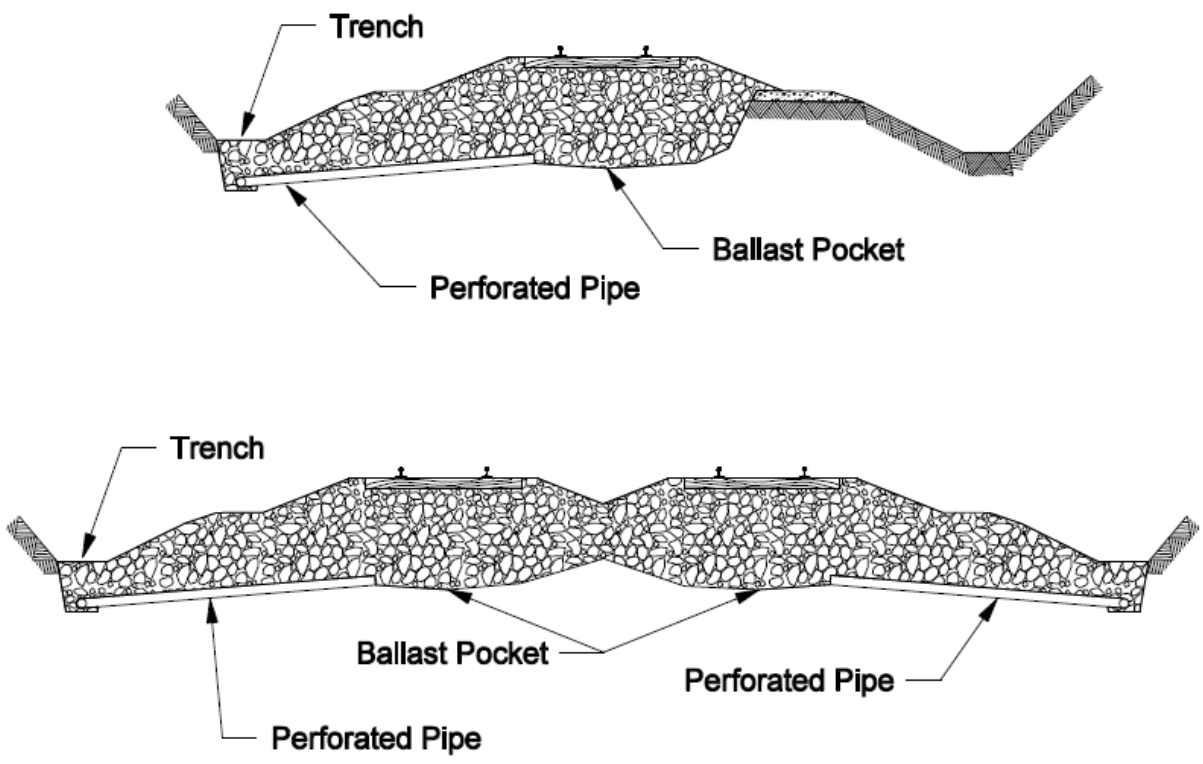

Figure 1-I

5. When cutting drains to both sides of the track, stagger the drains by centering them between the drains cut on the opposite side of the track as shown in Figure 1-J.

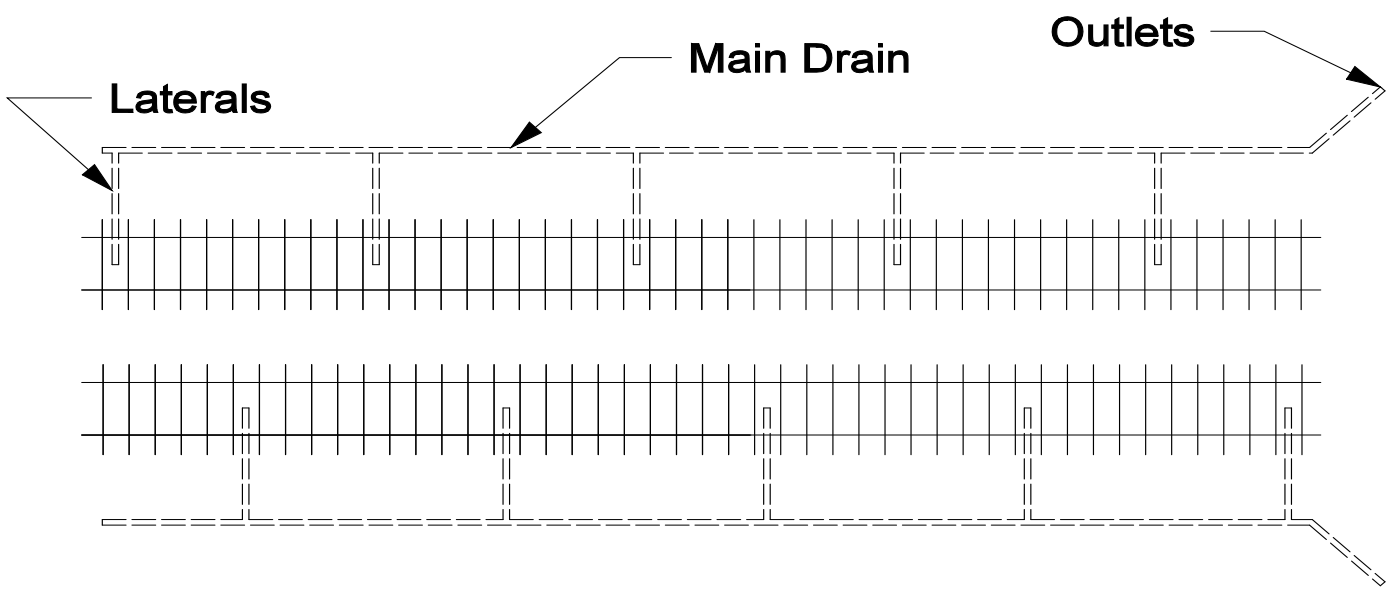

Figure 1-J

6. In fill sections of the roadbed:
   - Excavate rock drains laterally from the centerline of the track to one or both sides.
   - Make excavations that meet the following specifications:
     — 1 to 3 feet wide.
     — At least 15 inches below the water pocket or frost line as shown in Figure 1-K.

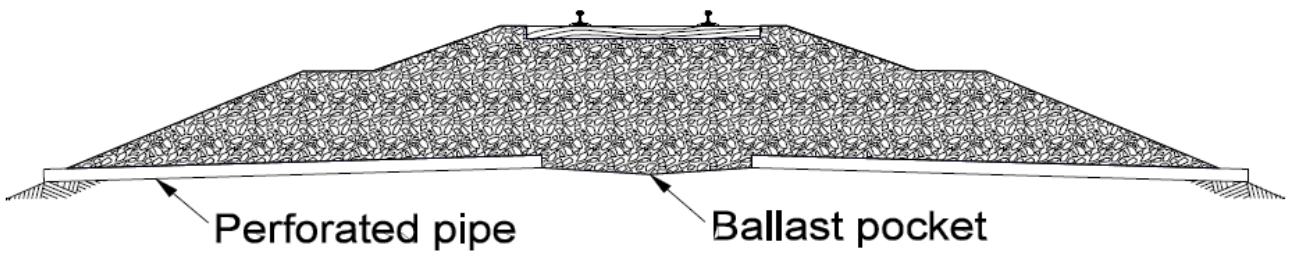

Figure 1-K

1.5.2 Embankment Stability

Follow these requirements when placing materials to stabilize embankments:

1. When unloading material on fills, distribute the material evenly on the face of the slope and terrace it up from the base.
2. **Do not** leave riprap or other fill material in the following locations:
   - On the top of embankments where the additional weight could cause a sudden and catastrophic failure
   - Near track where it could interfere with ballast regulators as they dress shoulders

A. Unexpected Embankment Settling or Failure

Follow these requirements if the roadbed settles unexpectedly or if an embankment fails:

1. Determine the content and stability of the roadbed and embankment before performing work at that location.
2. Report the situation to the Manager Track Maintenance.

> **NOTE: Do not alter the design of an embankment unless you have the approval of the Chief Engineer.**

1.5.3 Borrow Pits

Follow these requirements when borrowing material from the right of way:

1. Borrow dirt for grading from the outer edge of the right of way if material is suitable.
2. Make sure that borrowing will not cause water to collect where the material was excavated.
3. Leave pit excavation side walls no steeper than a 2 horizontal to 1 vertical (2 to 1) slope.

4. Keep at least 10 feet between the toe of embankments and pit excavations.

1.6 Ballast

1.6.1 Purpose

Ballast serves the following purposes:

1. Uniformly transmits and distributes the load of track and railroad rolling stock to the subgrade.
2. Restrains the longitudinal, lateral, and vertical displacement of track under loads imposed by railroad rolling stock and forces exerted by the rail.
3. Allows the track to drain quickly and prevents water from accumulating around the track structure.
4. Retards the growth of vegetation.
5. Reduces frost heaving of track caused by water from the subgrade.
6. Allows employees to correct irregularities in track surface and alignment.

1.6.2 Ballast Section

Maintain the ballast section according to Standard Drawing No. 0001 for wood tie track, No. 0002 for concrete tie track and No. 0003 for industrial track.
Follow these requirements to establish and maintain the ballast section:

1. Maintain tie cribs with ballast to a level 1 inch below the rail base. Maintain the ballast line on an even plane for the full length of the tie.
2. Maintain the side slope of the ballast line from the outermost edge of the shoulder to the top of the subgrade or subballast with a uniform 3 to 1 slope as shown in Figure 1-L.

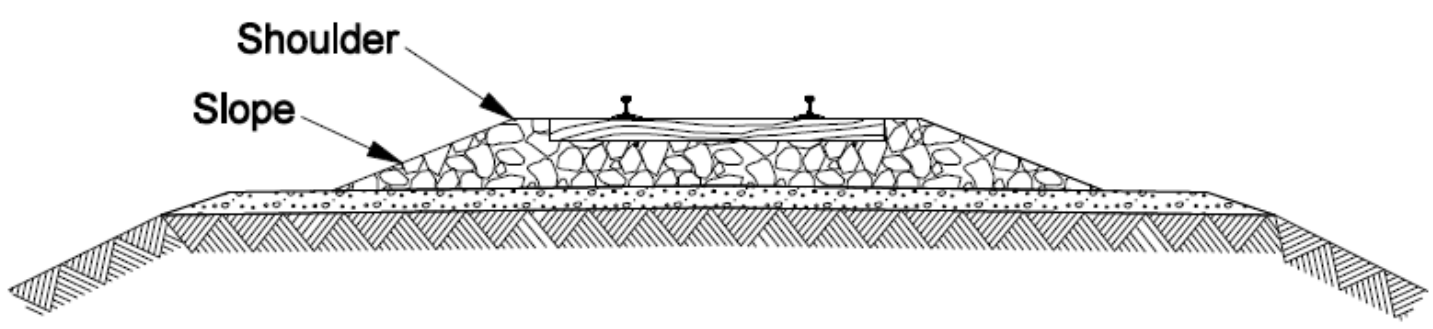

Figure 1-L

3. Construct the intersection of the ballast side slope lines between multiple tracks in a "V" shape as shown in Figure 1-M.

NOTE: This area may be leveled off between the body tracks of yards in terminals or other switching locations where employees frequently perform work between tracks.

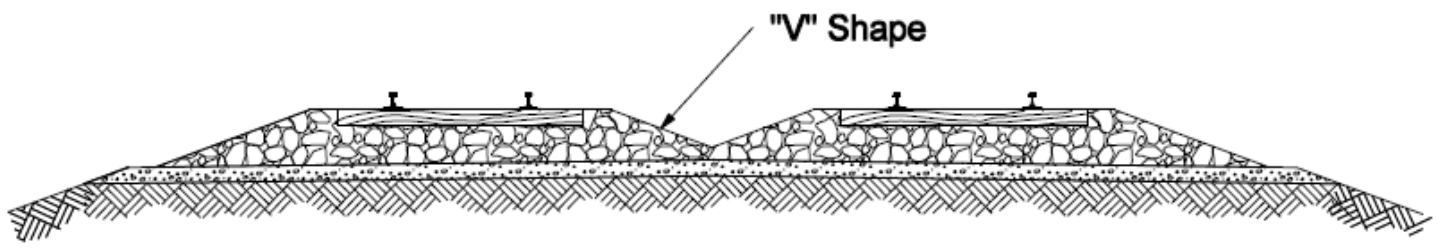

Figure 1-M

4. Keep flangeways clear of ballast through switches, derails, crossing frogs, and grade crossings.
5. Remove ballast from tie cribs to provide a minimum 3-inch clearance between the ballast and the operating linkage of turnouts and other devices. Maintain this clearance for the entire area through which the linkage travels during its operation.
6. Maintain the ballast shoulder to the specified width in Table 1-B as measured outward from the ends of ties.

Tie Type	Rail Type	Minimum Width
Wood/Composite	Jointed	9 in.
Wood/Composite	CWR	12 in.
Steel	CWR	
Concrete	CWR	

Table 1-B

7. Maintain ballast to the specified depth as measured below the horizontal surface of the tie bottom. See Table 1-C.

Tie Type	Traffic Density	Minimum Depth
Wood/Composite	Less than 10 MGT	8 in.
Wood/Composite	10 MGT or more	12 in.
Steel	All locations	10 in. *
Concrete	All locations	12 in.

Table 1-C

** NOTE: Measure downward from the center section of the tie and not from tie ends.*

1.6.3 Sources and Gradation

Obtain ballast from approved ballast pits. Determine the correct ballast size according to track type as shown in Table 1-D.

Track Type	Gradation	Ballast Type
Main and sidings	3/4 to 2-1/4 in.	1
All others	3/8 to 1-3/8 in.	2

Table 1-D

1.6.4 Distribution

1. Follow these requirements when distributing ballast:
   - Avoid moving trains over skeleton track. However, if movement is necessary, ensure that the train speed does not exceed 5 MPH.
   - Protect trains with a slow order over skeleton track where new ballast has been dumped until track has been surfaced and lined.
   - Distribute enough ballast to provide the designated shoulder width, shoulder slope, depth under ties, and full tie cribs.

     NOTE: Determine the required quantity of ballast based on the grade raise or track profile you want to achieve.

   - Whenever possible, distribute ballast before unloading ties for system tie projects.
2. When unloading ballast:
   - Regulate control-flow doors on ballast cars to minimize the amount of ballast that is redistributed by ballast regulators.
   - If ballast piles or ridges are above the top of the rail where they could be struck by rolling stock equipment, promptly level to top of rail before returning track to service.
   - If unloading heavy amounts of ballast, safely position a fair or better hardwood plow tie in front of the leading wheels of a loaded car.

     NOTE: Immediately remove ballast from bridge walkways, station platforms, grade crossings, and any part of turnouts that interferes with their use.

   - To keep an evenly distributed load in a ballast car with control flow doors, simultaneously regulate ballast flows from opposite sides of the car.

     NOTE: Avoid unloading the ballast car to one side only, particularly in curves. This can cause wheel climb or can cause the car to overturn.

3. Minimize or avoid distributing ballast in segments where:
   - The existing ballast shoulders exceed designated width.
   - There is a large amount of ballast between adjacent tracks.
   - Track raises are restricted to maintaining their existing grade.

     NOTE: These locations include open-deck bridges, snow sheds, station platforms, crossing frogs, interlocking, tunnels, overpasses, grade crossings, or other locations where track raises are restricted by vertical clearances.

4. Plow out and regulate ballast unloaded between rails within 90 days of unloading or before the winter freeze.

   NOTE: Ballast left between rails deteriorates ties, accelerates spikes working up in wood ties, inhibits inspections, and promotes ballast fouling.

5. When regulating ballast into track do not pull fouled ballast or dirt into the track structure.

6. Use Table 1-E to determine typical ballast quantities for program work on standard track.

Track Type	Tie Type	Project Type	Cars Per Mile
Main and sidings	Concrete	New Construction	82
Main and sidings	Wood/Composite	New Construction	68
Industry and yards	Wood/Composite	New Construction	46
Main and sidings	Concrete	TRT	50
Main and Sidings	Concrete	TRT with Undercut	35
Main and sidings	All	Sled/Undercut	30
Main and sidings	Wood/Composite	Ties	6
Main and sidings	All	TS&L	6
Industry and yards	All	Ties/TS&L	5
All	All	Rail Relays	4

Table 1-E

7. For information necessary for the Herzog automated dump trains go to intranet site at: Engineering>Track Maintenance>Manage>Project Plans>Capital Projects>MTP Planning Support Portal>Ballast>Herzog Ballast File Request System>Help.
8. Use Table 1-F to determine typical ballast quantities for track panels and special track work renewals.

Renewal Type	Number of Cars
Track Panels (3 each)	1
Crossing Frog	1
No. 7, 8.5, 9, 10, 11 Turnouts	2
No. 14, 15 Turnouts	3
No. 20, 24 Turnouts	4
No. 30 Turnout	5

Table 1-F

1.6.5 Stock Piling

Ballast should be kept free of soil and other contaminants. Excavate a pit beneath sidetrack in the following situations:

1. Only one side of a car equipped with control flow doors is accessible.
2. A bottom dump car is provided.

1.6.6 Ballast Car Release

Before releasing ballast cars to normal train service movement:

1. Completely unload ballast cars & lock doors in closed position.
2. Covered hopper cars in wrecker service must have tarp secured in the covered position.
3. Report inoperable (bad order) doors or cars as follows:
   - Obtain the car initial/number and brief defect description.
   - Use work train to set car out and report its number and location to DHCO; and notify MWOC (402-636-7434) and/or Track Planning Engineer - Ballast at (402) 544-5691.

Under no condition should any ballast car with an imbalanced load be released to normal train service movement. You must know this condition does not exist before you release!

Cars in unit train or wrecker service with inoperable doors, cars or tarps must be reported to MWOC (402-636-7434) when train is released.

Cars in manifest service with inoperable doors, cars or tarps must be reported to the Track Planning Engineer – Ballast at (402) 544-5691, who will report the car to DHCO and bill the car to the designated repair facility. Running repairs (wheels, brakes, safety appliances, etc.) can be made at a local repair track.

1.6.7 Spot Maintenance

Follow these requirements to perform spot maintenance on ballast:

1. If a location is holding water, correct it as soon as possible. Open up the ends of ties and clean them out to allow standing water to drain from the track.
2. Begin tie cribbing two to three tie cribs beyond the location being corrected. Fouled ballast is probably there, although it may not be visible yet.
3. Prevent fouled or muddy locations from growing as follows:
   - Crib ballast out from between one pair of ties at each end of the mud hole.

- Crib out 3 inches below the tie bottom for the full length of the tie and backfill with clean ballast.

NOTE: If water does not drain between cribbed ties, you may need to crib additional ties to drain water from the track.

4. Correct small fouled or muddy locations as follows:
   - Crib ballast out between ties for the full length of the mud hole.
   - Crib out 3 inches below the tie bottom for the full length of the tie.
   - Temporarily shift ties laterally and remove fouled material from under the tie's original location.
   - Re-space ties to their original location and backfill with clean ballast.
   - After cribbing is finished, surface and line track to ensure full bearing on ties.

1.6.8 Program Maintenance

To perform large-scale remediation of fouled ballast use plowing, raking, sledding, or undercutting operations.

Follow these requirements to perform program maintenance:

1. When track is removed for tie renewals or for correcting a fouled ballast condition, remove all ballast to the bottom of the pan on ballast deck bridges. Make sure that all weep holes are open and free of debris.
   - Do not disturb water proofing on ballast deck bridges.
2. Perform ballast shoulder cleaning operations to promote drainage by opening tie ends. Operate the wheels on the shoulder cleaner at least 6 inches below the bottom of ties.
3. Use a ballast regulator to plow shoulders in place of ballast shoulder cleaning for out-of-face surface and lining or tie program work. Pull all clean ballast from shoulders into the track before cutting the shoulder. Plow shoulders to a depth of 2 inches below the bottom of ties and slope down for drainage.
4. Scarify shoulders where shoulder plowing is impractical due to close track centers or other obstructions.

2.0 TRACK GEOMETRY

2.1 Geometry Measurements 2-2
2.1.1 Post Derailment Track Measurements 2-2
2.1.2 Determine Designated Rail 2-2

2.2 Track Alignment 2-2
2.2.1 Designated Line Rail for Curved Track 2-2
2.2.2 Designated Line Rail for Tangent Track 2-2
2.2.3 Designated Line Rails for Turnouts and Crossovers 2-3
2.2.4 Staking Curves 2-3
2.2.5 Measuring Alignment 2-3
2.2.6 Alignment Limits 2-4
2.2.7 Restoring Uniform Alignment 2-5
2.2.8 Line Ordinates in Turnouts and Crossovers 2-5
A. Line Ordinates Behind Frog 2-6

2.3 Track Gage 2-6
2.3.1 Designated Gage Rail 2-6
2.3.2 Standard Gage 2-6
2.3.3 Measuring Gage 2-6
2.3.4 Gage Limits 2-7
2.3.5 Gage Rods 2-8
2.3.6 Restoring Standard Gage 2-8
2.3.7 Program Maintenance 2-9

2.4 Clearances 2-9
2.4.1 Measuring Track Centers 2-9
2.4.2 Minimum Track Centers 2-9
2.4.3 Track Centers in Crossover Switches 2-10
2.4.4 Minimum Clearances 2-11
2.4.5 Allowable Superelevation in Adjacent Tracks 2-11

2.5 Grade 2-11
2.5.1 Designated Grade Rail 2-12
2.5.2 Grade Stakes 2-12
2.5.3 Multiple Track Grade Crossings 2-12
2.5.4 Turnouts and Crossovers 2-12
2.5.5 Vertical Curves 2-12

2.6 Surface 2-12
2.6.1 Measuring Crosslevel and Superelevation 2-12
2.6.2 Measuring Warp (twist) 2-13
2.6.3 Tank Car Warp 2-14
2.6.4 Measuring Profile 2-14
2.6.5 Track Surface Limits 2-15
2.6.6 Spirals 2-17
2.6.7 Superelevation 2-18
2.6.8 Curve Markers 2-20
2.6.9 Restoring Surface 2-21
2.6.10 Surfacing Steel Tie Installations 2-22
2.6.11 Surfacing at Signal Detectors 2-22
2.6.12 Track Shims and Planks 2-23

2.7 Vehicle Track Interaction (VTI) 2-23
2.7.1 Hardware Used for VTI System 2-23
2.7.2 VTI Thresholds 2-24
2.7.3 Handling of VTI Exceptions 2-25

2.8 Performance Based Track Geometry (PBTG) 2-25
2.8.1 PBTG System 2-25
2.8.2 PBTG Exception Criteria 2-25
2.8.3 Track Evaluation Car PBTG Exception Report 2-25
2.8.4 Track Evaluation Car PBTG Recommended Action Report 2-26

2.0 Track Geometry

2.1 Geometry Measurements

Geometry measurements indicate the standards to which track conforms when measured under load. When taking measurements on unloaded track to determine compliance with geometry standards, add the rail movement that occurs when track is under load.

Geometry defects, depending on severity are classified in two categories.

- **Urgent Condition:** A track structure irregularity that may or may not require immediate corrective action be taken. This irregularity must be verified within 7 calendar days to determine whether immediate remedial or corrective action is required.

  The following Urgent Defects require corrective action within 30 calendar days or remedial action is then required.

  - **Profile**
  - **Twist in a 31’ Chord**
  - **Variable Tank Car Warp**
  - **Wide Gage**
  - **Crosslevel**
  - **Warp in a 62’ Chord**
- **Critical Condition:** A track structure irregularity that may require immediate remedial or corrective action be taken prior to any movement of trains.

Note: Both Urgent and Critical defects require closure in the Track Maintenance Planner (TMP) system.

2.1.1 Post Derailment Track Measurements

1. Track measurements will be taken in conjunction with all mainline and siding geometry, Lateral over Vertical forces (L/V) or unknown caused derailments as part of the investigation process.
2. Measurements taken must indicate the condition of the track prior to repairs being made.
3. All references made to left or right rail are determined by facing in the direction that the derailed train was traveling. May not be the same as designated line rail used for derailment and train interaction modeling.
4. Record all measurements in inches to the nearest 1/16".
5. All evident lateral and vertical rail movement is to be added to all measurements taken on unloaded track.
6. Record crosslevel in respect to the amount the left-hand rail is above (+) or below (-) the right hand rail.
7. Record crosslevel measurements under load of engine or other equipment when swinging or improperly tamped ties are noted within the limits where measurements are taken.

These measurements should be documented on Post Derailment Track Measurement form PB-24004. This form may be ordered through e-procurement or found on the Engineering Website. MyUP > Reference > Derailment Investigation System > Post Derailment Track Geometry Measurement Sheet

2.1.2 Determine Designated Rail

When reading geometry or detector car reports and trying to determine which rail is the right rail and which rail is the left rail, position yourself with your back to the lower MP. While facing the higher MP, the rail on your right is the right rail and on your left is the left rail.

2.2 Track Alignment

Track alignment consists of tangent segments of track connected by curves. One rail of each track is designated as the line rail.

2.2.1 Designated Line Rail for Curved Track

The outer or high rail of curves is the line rail for referencing alignment.

2.2.2 Designated Line Rail for Tangent Track

Designate the line rail for referencing alignment on tangent track as follows:

- **Single Main Track**—Use the north rail of east/west tracks and the west rail of north/south tracks.
- **Two Main Tracks**—Use the outside rail of each track.
- **Three Main Tracks**—Use the outside rail of the outer tracks. Use the north rail of east/west tracks and the west rail of north/south tracks as the line rail for referencing alignment on the center track.
- **Four Main Tracks**—Use the outside rail of the outer tracks. Use the inside rail of the inner tracks as the line rail for referencing alignment on the center tracks.

- **All Other Applications**—Use the most practical line rail. Use this same rail throughout the tangent segment.

When lining tangent track between two curves of the same direction that are less than 1/4 mile apart, use the same line reference rail.

When lining into a fixed object that is less than 1/4 mile from the curve, use the same line reference rail as used in a curve.

NOTE: Examples of fixed objects are open deck bridges, crossing frogs, or other immovable objects.

2.2.3 Designated Line Rails for Turnouts and Crossovers

Use the straight side of turnouts as the designated line rail for referencing alignment through the straight side of switches when turnouts exist entirely on tangent track as shown in Figure 2-A.

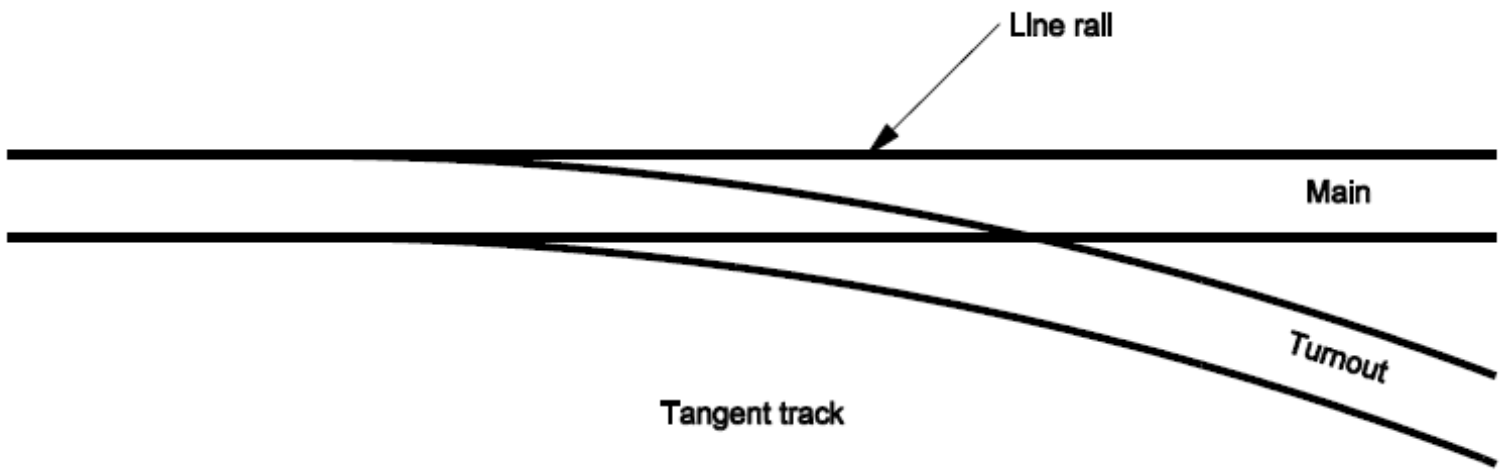

Figure 2-A

When any portion of a turnout is located on a curve, use the high or outer rail of the curve as the designated line rail as shown in Figure 2-B.

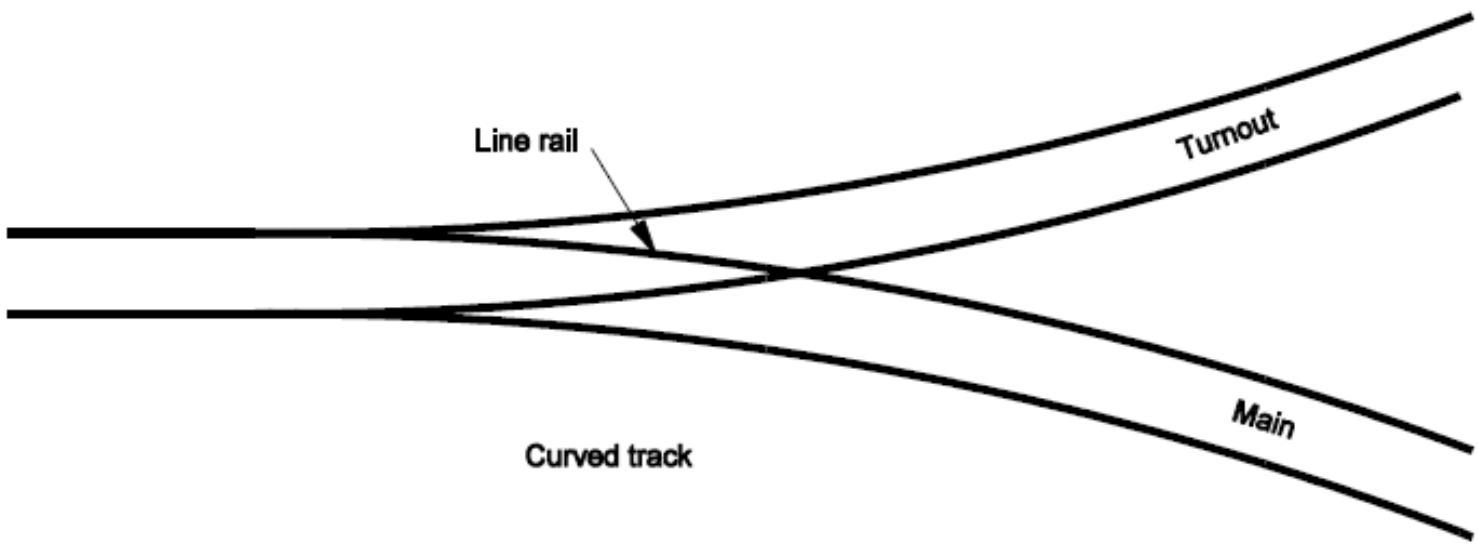

Figure 2-B

2.2.4 Staking Curves

Refer to section 7.9.10 “Monitoring Curve Movement” for Staking Curves

2.2.5 Measuring Alignment

Follow these requirements when measuring alignment:

1. Measure alignment on the designated line rail on the gage side of the rail head. Measure at a point 5/8 inch below the top of the rail head as shown in Figure 2-C.

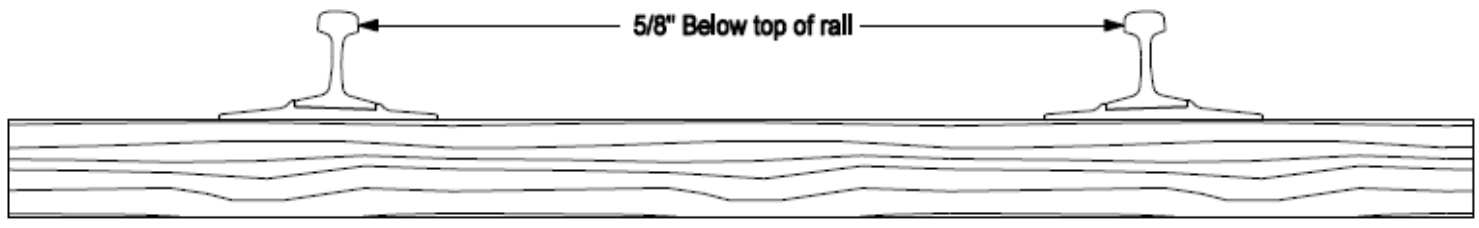

Figure 2-C

2. Record measurements at 15-1/2-foot intervals on the same rail for the full length of tangent and curved segments.
3. Use a 31-foot, 62-foot or 124-foot chord (Class 6 track) length to obtain track alignment measurements as shown in Figure 2-D.

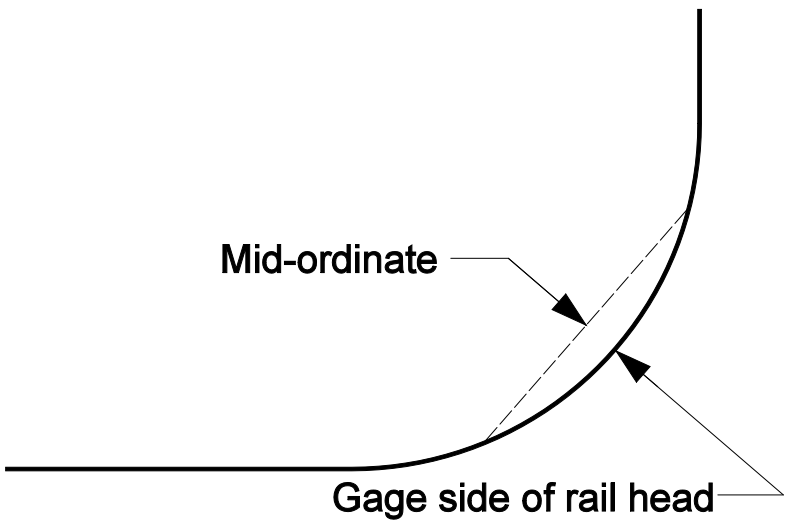

Figure 2-D

NOTE: The distance between the mid-ordinate or center of a 31-foot, 62-foot or 124-foot chord and the gage side of the rail head determines track alignment.

- When using a 31-foot chord, multiply readings by four.
- When using a 62-foot chord, note that the measurement in inches equals the degree of curvature, as shown in the examples in Table 2-A.

Examples of Converting Measurements to Degrees of Curvature		
Measurement	**31-foot Chord**	**62-foot Chord**
1 inch	4 degrees	1 degree
1-1/4 inches	5 degrees	1 degree – 15 minutes
1-1/2 inches	6 degrees	1 degree – 30 minutes
1-3/4 inches	7 degrees	1 degree – 45 minutes
2 inches	8 degrees	2 degrees

Table 2-A

4. Using Shims
   - To measure alignment on tangent track, you may need to place 1-inch or greater shims at the gage side of the rail where the ends of the 62-foot chord would normally contact the rail head.

NOTE: Shims offset the 62-foot chord to take the measurement at the mid-ordinate without contacting the rail head along the chord.

   - Subtract the shim thickness from the mid-ordinate measurement to determine the exact reading.

2.2.6 Alignment Limits

Do not allow alignment to deviate from uniformity more than the following thresholds for the applicable class of track. Measure deviations at the mid-ordinate of the designated chord length.

NOTE: The FRA does not consider a track segment with curvature of less than 0.5 degrees to be a curve; however, UPRR utilizes curves less than 0.5 degrees.

1. Single Alignment Deviation

Table 2-C Shows Urgent Conditions:

Class of Track	Tangent Track		Curved Track		All Track
	Deviation from mid-ordinate of 62' chord	**Deviation from mid-ordinate of 31' chord**	**Deviation from mid-ordinate of 31' chord**	**Deviation from mid-ordinate of 62' chord**	**124 chord**
1	4-3/4 inches	*N/A	*N/A	4-3/4 inches	*N/A
2	2-13/16 inches	*N/A	*N/A	2-13/16 inches	*N/A
3	1-5/8 inches	*N/A	1-3/16 inch	1-5/8 inch	*N/A
4	1-3/8 inches	*N/A	15/16 inch	1-3/8 inch	*N/A
5	11/16 inch	*N/A	7/16 inch	9/16 inch	*N/A
6	11/16 inch	7/16 inch	7/16 inch	11/16 inch	1-3/8 inch

Table 2-C **Measurements not applicable*

Table 2-D Shows Critical Conditions.

Class of Track	Tangent Track		Curved Track		All Track
	Deviation from mid-ordinate of 62' chord	**Deviation from mid-ordinate of 31' chord**	**Deviation from mid-ordinate of 31' chord**	**Deviation from mid-ordinate of 62' chord**	**124 chord**
1	5 inches	*N/A	*N/A	5 inches	*N/A
2	3 inches	*N/A	*N/A	3 inches	*N/A
3	1-3/4 inches	*N/A	1 1/4 inches	1-3/4 inches	*N/A
4	1-1/2 inches	*N/A	1 inch	1-1/2 inches	*N/A
5	3/4 inch	*N/A	1/2 inch	5/8 inch	*N/A
6	3/4 inch	1/2 inch	1/2 inch	5/8 inch	1-1/2 inch

Table 2-D **Measurements not applicable.*

2. Multiple Alignment Deviation – Class 6 track only
   - A multiple deviation is considered to exist when three or more non-overlapping deviations occur within a distance five times the specified chord length.
   - Uniformity at any point along the track is established by averaging the measured mid-chord offset values for nine consecutive points centered around that point and which are spaced according to the following chart:

Chord Length	*Spacing*
31’	7’9”
62’	15’6”
124’	31’0”

Table 2-E Shows Severity Conditions for Class 6 Track – Multiple Deviations

Class of Track 6	Deviation from mid-ordinate of 31' chord	Deviation from mid-ordinate of 62' chord	Deviation from mid-ordinate of 124' chord
Urgent	5/16”	7/16”	15/16”
Critical	3/8”	1/2”	1"

Table 2-E

2.2.7 Restoring Uniform Alignment

Follow these requirements to restore uniform alignment:

1. Correct track alignment in ballasted track by laterally shifting the track to uniform alignment while referencing the designated line rail.
2. Use laser systems with automatic tamping machines to align tangent track when provided.
   - Place the laser on fixed track structures such as open deck bridges or other immovable objects.
   - Verify track centers where the laser is placed before starting lining operations.
3. Correct track alignment of fixed track structures such as open deck bridges or other immovable objects by spike lining the designated line rail to uniform alignment.

NOTE: When spike lining to adjust alignment, monitor track gage and adjust as necessary to conform with established gage standards.

4. When aligning crossover switches that have long switch ties that extend under both tracks:
   - Reference the designated line rail on the straight side of the crossover switches.
   - To correct alignment of all other designated line rails in the crossover requiring adjustment, spike line the rail to uniformity.
5. When laterally shifting switches to uniform alignment:
   - Reference the designated line rail on the straight side of switches.
   - To correct alignment of the other designated line rail in the turnout requiring adjustment, spike line the rail to uniformity.

2.2.8 Line Ordinates in Turnouts and Crossovers

The designated line rail for referencing alignment through the turnout side of switches is the turnout side closure rail. The closure rail connects the switch point to the frog and continues from the heel of the frog through the last long switch tie.

Follow these requirements when establishing alignment in turnouts and crossovers:

1. To establish alignment through turnout side of switches through the last long switch tie, use line ordinates provided in the Engineering Track Standards book, Sections 7000–7099, Turnouts.

NOTE: Line ordinates denote the specific spread distance between gage lines of curved closure rails and adjacent rails on the straight side of turnouts. The spread distance establishes the proper alignment for the turnout side of switches.

2. Establish alignment for the turnout side of switches not having published ordinates as follows:
   a. Align the straight side of the turnout to the desired alignment.
   b. Stretch a string between the heel of the switch and the toe of the frog along the gage line.
   c. Measure the overall distance and divide into four equal parts.
   d. Offset the center ordinate at a right angle to the string 6 inches and spike in place.
   e. Offset each quarter ordinate at a right angle to the string 4-1/2 inches and spike in place as shown in Figure 2-E.

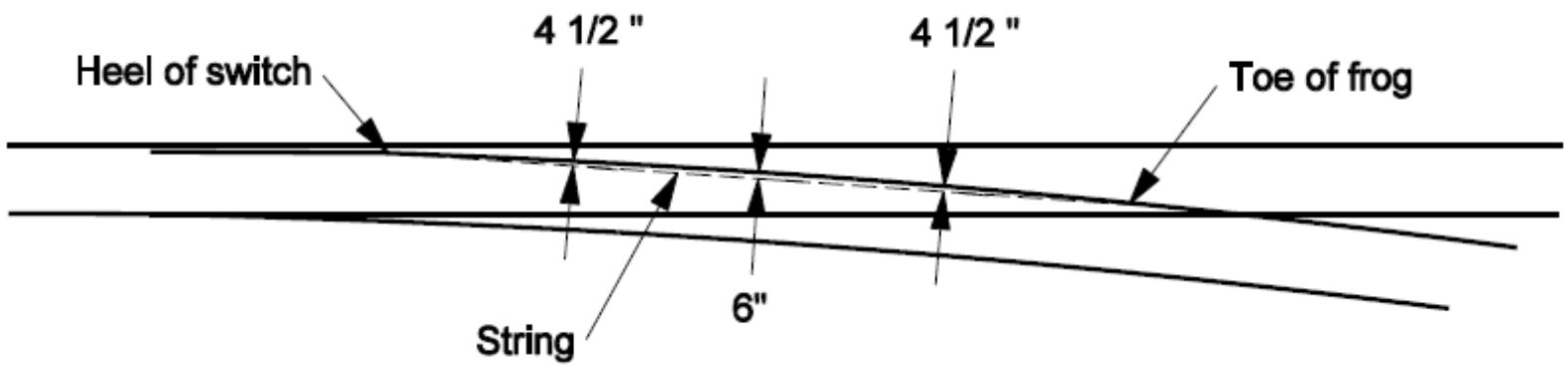

Figure 2-E

A. Line Ordinates Behind Frog

Line ordinates behind the frog spread apart over a given distance at a rate determined by the frog size. See Table 2-F.

If frog size is…	The spread increases 1 foot every…
7	7 feet
8	8 feet
8.5	8.5 feet
9	9 feet
10	10 feet
11	11 feet
14	14 feet
15	15 feet
20	20 feet
24	24 feet
30	30 feet

Table 2-F

When determining line ordinates for behind the frog:

1. Locate the point where the frog's heel spread measures 1 foot between the gage lines.
2. From this point measure away from it down the straight side of the turnout. Measure the number of feet that equals the frog size.
3. At this point, spread the gage lines and spike them 2 feet apart.
4. Continue this process until you establish all ordinates and spike through the last switch tie as shown in Figure 2-F.

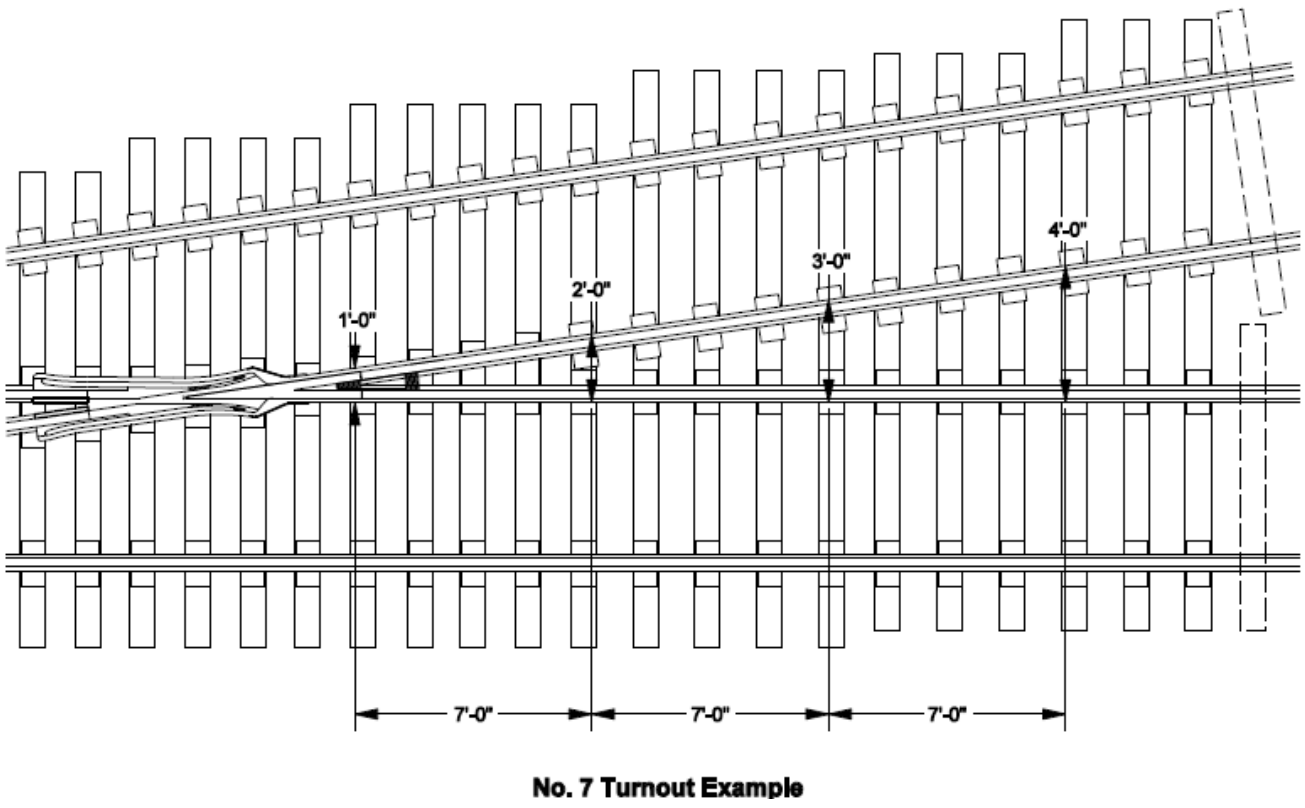

Figure 2-F

2.3 Track Gage

Track gage is the distance between the two running rails of the track structure. Properly maintained track gage provides for a smooth ride, reduces rail wear, retains alignment and surface, and ensures that wheels do not fall between rails.

2.3.1 Designated Gage Rail

The rail opposite the designated line rail of track or turnouts is the designated gage rail.

2.3.2 Standard Gage

Standard track gage is 56-1/2 inches.

2.3.3 Measuring Gage

Follow these requirements when measuring gage:

1. Measure gage between the heads of the rail at right angles to each other. Measure at a point 5/8 inch below the top of the rail head as shown in Figure 2-G.

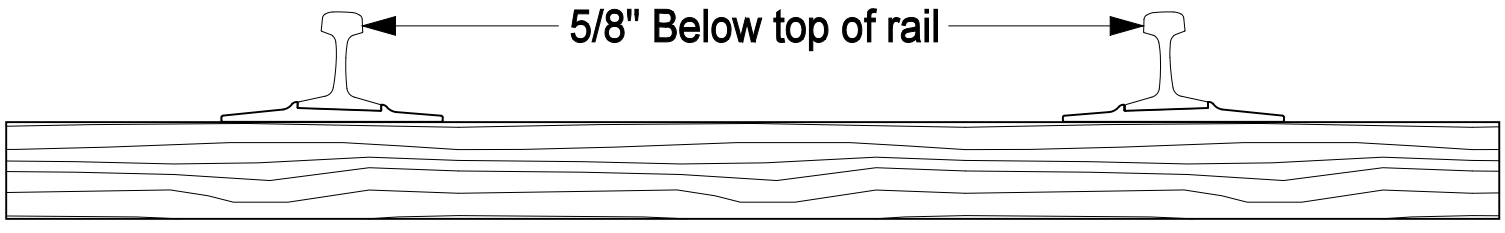

Figure 2-G

2. Use an approved track gage every fourth tie when adjusting or checking gage, spiking ties, relaying rail, or constructing new track to conform to standard gage as shown in Figure 2-H.
   - Measure the track gage with a tape measure to verify its accuracy before use.
   - Do not force the track gage between rails.

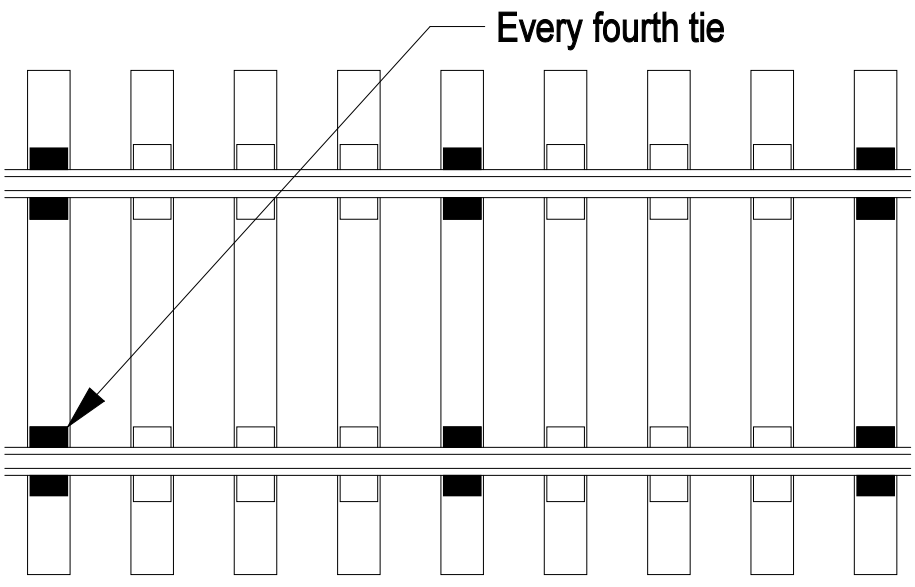

Figure 2-H

3. Before replacing or transposing rail back into tie plates without re-gaging, take inside base-to-base measurements to ensure that installing full-balled rail will not create narrow gage. Take these measurements as shown in Figure 2-I and Table 2-G.

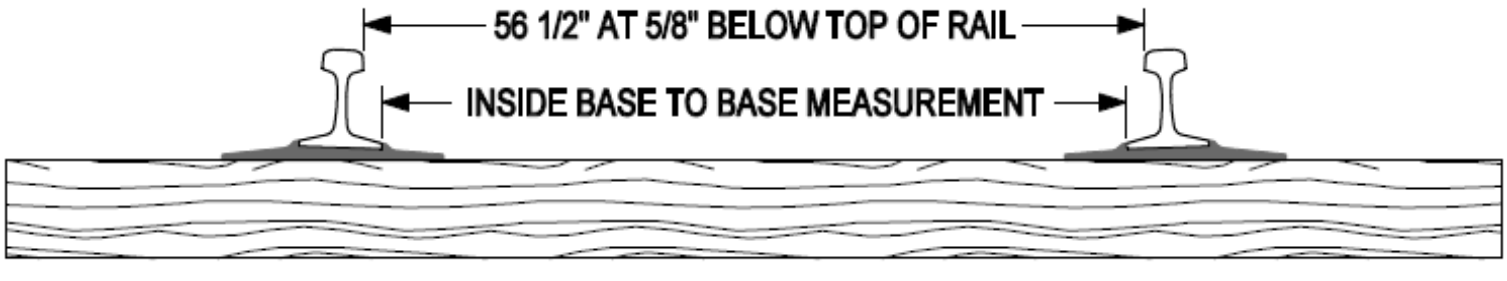

Figure 2-I

Rail Section	Rail Seat Cant	Base-to-Base Gage	Base-to-Base Gage Not More Than…
141 lb.	1:40	53-3/4 inches	54-1/4 inches
136 lb.	1:40	53-3/4 inches	54-1/4 inches
133 lb.	1:30	53-7/8 inches	54-3/8 inches
112 to 119 lb.	1:40	54 inches	54-1/2 inches

Table 2-G

2.3.4 Gage Limits

Urgent Limits for gage are shown in Table 2-I.

Class of Track	Not More Than...	Max. Change in 31’
1	57-7/8 inches	*N/A
2 and 3	57-11/16 inches	*N/A
4 and 5	57-5/16 inches	*N/A
6	57-1/8 inches	1/2 inch

Table 2-I

Critical Limits for gage are shown in Table 2-J.

Class of Track	Not less than...	Or More Than...	Max. Change in 31’
1	56 inches	58 inches	*N/A
2 and 3	56 inches	57-3/4 inches	*N/A
4 and 5	56 inches	57-1/2 inches	*N/A
6	56 inches	57-1/4 inches	3/4 inch

Table 2-J

If track gage measures more than 58 inches, immediately remove the track from service until repairs are made.

2.3.5 Gage Rods

Follow these requirements when installing gage rods:

1. Install gage rods where due to damage or deterioration, wood ties will not effectively maintain gage or concrete tie shoulders will not effectively secure rail fastenings.

   NOTE: If tie plates are severely cut into ties causing reverse canting, do not use gage rods. Gage rods will only increase gage measurement under car loadings. Refer to Figure 2-J

2. Install gage rods at regular intervals in sufficient quantity to maintain gage.

   NOTE: Do not install gage rods as a permanent substitute for effective ties to retain gage.

3. Use insulated gage rods in circuited or signalized track.
4. Gage rods are not a substitute for ties.
5. Install insulated gage rods in wood tie track at hot box detectors. See Figure 2-J.

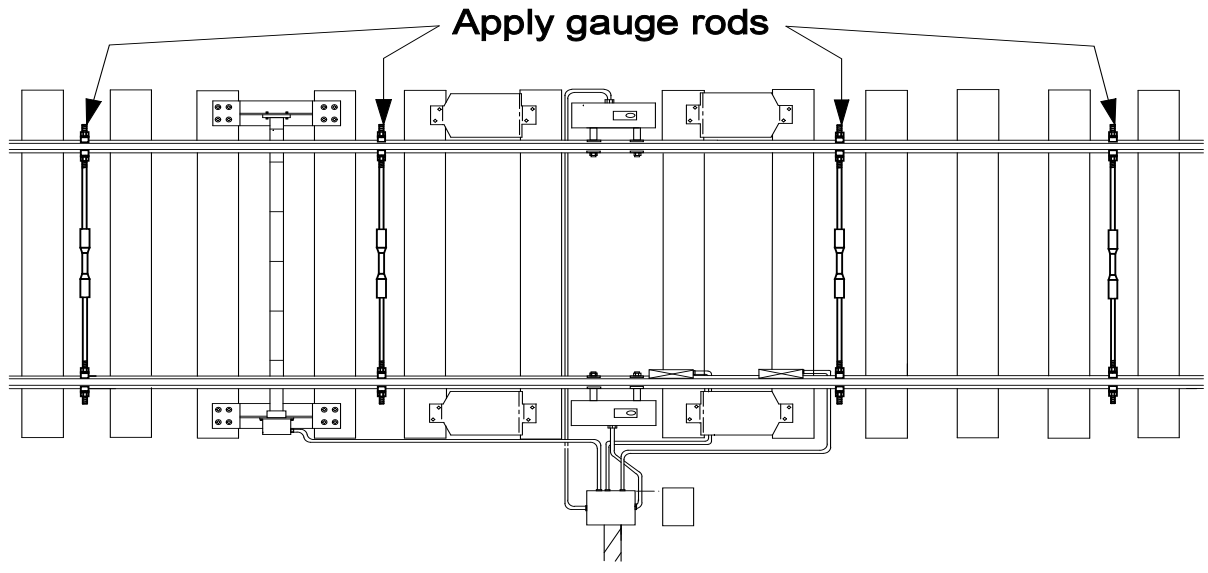

Figure 2-J

2.3.6 Restoring Standard Gage

A. Follow these requirements when restoring track to standard gage:

1. Perform spike pulling and re-driving along the designated gage rail.
2. Plug spike holes before re-driving spikes.
3. When gaging track in curves, you may need to spike line joints on the high rail to correct alignment deviations. You can achieve proper gage by gaging the low rail to the high rail.
   - At locations where repeat gaging has been performed ensure high rail spikes are pulled and plugged prior to gaging low rail.
4. To correct wide gage caused by canted or tipped rail from sand or ice build-up between the base of the rail and the top of the tie plate, remove the material to restore the rail to a level plane.
5. To correct wide gage caused by worn insulators, replace worn insulators in concrete or steel tie track.
6. To correct wide gage caused by curve rail worn beyond the allowable limits, transpose or replace rail. See Section 4.3.4 Curve Rail Wear Limits
7. To correct narrow track gage caused by skewed ties, return the ties to right angles to the running rails before adjusting the gage. Box anchor the tie to prevent recurrence.

   NOTE: It may be necessary to replace defective ties in order to restore standard gage.

B. Follow these requirements when correcting gage caused by canting deficiencies:

1. Differential plate cutting is another cause of wide or narrow gage. A differential plate cutting of 3/8” on one rail can cause track to be out of gage by 3/16”.
2. Nominal cant for 1:40 is +1.42 degrees and 1:30 cant is +1.90 degrees.
3. On wood tie track a differential plate cutting of 3/8" toward the field side will show a cant of 0º. Plate cutting toward the gage side of 7/16" will show a cant of +3.5º. Refer to Figure 2-K.

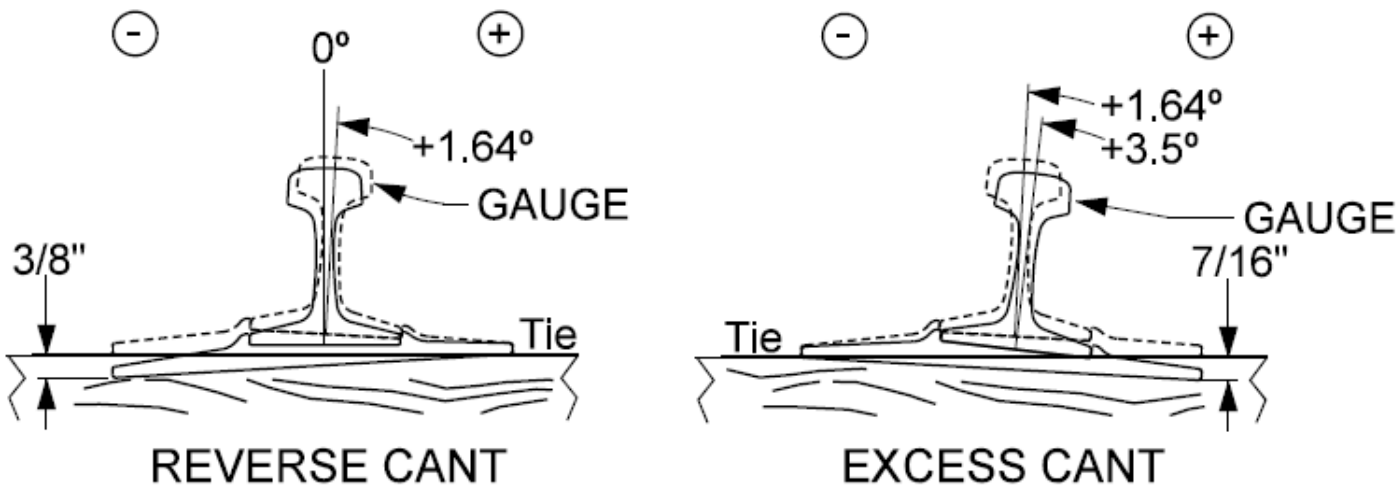

Figure 2-K

4. To correct this type of exception, the tie plates must be removed and the plate-bearing surface of the ties must be adzed to a level plane.

The following thresholds are for rail cant on Wood Ties:
Urgent limit is Negative -1.5 degrees
Critical limit is Negative -2.0 degrees

The following thresholds are for rail cant on Concrete Ties:
Urgent limit for Positive is 3.50 degrees and Negative is -0.50 degrees
Critical limit for Positive is 4.50 degrees and Negative is -1.50 degrees

NOTE: Concrete tie rail cant exceptions must be verified within 48 hours and reported in the TMP.

2.3.7 Program Maintenance

Maintain standard gage as follows:

1. When track gage measures 57 inches or greater, adjust it to standard gage before spiking out-of-face wood tie installations.
2. Restore standard gage in curves when double transposing or relaying rail back into plates where gage measures 57 inches or greater.
3. Gage track to standard 56-1/2” gage during all rail relays.

NOTE: Gage of 56-3/4 inches is allowed on wide-gage concrete ties. These ties are marked 56-3/4 adjacent to the field side shoulder on one end of the tie as shown in Figure 2-L.

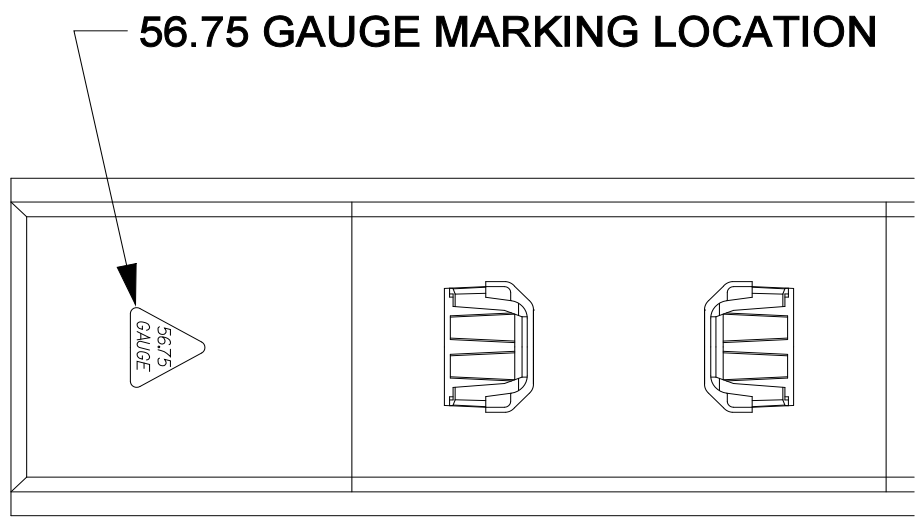

Figure 2-L

2.4 Clearances

Maintain adequate spacing between tracks to enable trains to safely pass or meet rolling stock on adjacent tracks. Maintain sufficient horizontal and vertical clearance to enable trains to clear wayside structures and facilities.

2.4.1 Measuring Track Centers

Follow these requirements when measuring track center:

1. Measure track centers between the centerline of two adjacent tracks. Measure from the gage line of a rail of one track to the same rail of an adjacent track as shown in Figure 2-M.

Figure 2-M

2. Check track centers at the beginning of surfacing operations and every 660 feet or less behind automatic tamping machines where adjacent tracks are present. Check track centers every 330 feet or less through spirals and the full body of curves.
3. Contact Clearance Department at 402-544-2090 or 402-544-2094 with any questions about track centers or when track centers are changed.
4. When new tracks are constructed, report the new track centers to the Clearance Dept. with measurements every 528’.

2.4.2 Minimum Track Centers

Follow these requirements for track center length:

1. Maintain at least 13 feet between the centerline of main tracks and other adjacent track(s) on tangent track.
2. Maintain at least 12 feet 6 inches between the centerline of other than main tracks.
3. Maintain track centers in curves of parallel tracks to allow for car tilt and overhang due to curvature. Maintain track centers through the entire length of the curve and for 80 feet beyond the curve.
4. Use Table 2-K to determine the minimum track centers required for sufficient clearance in curved track.

MINIMUM TRACK CENTERS ON CURVES TO PROVIDE SUFFICIENT CLEARANCE ON ADJACENT TRACKS						
Where curve elevations are	**And curvature is 1 degree**	**And curvature is 2 degrees**	**And curvature is 3 degrees**	**And curvature is 4 degrees**	**And curvature is 5 degrees**	**And curvature is 6 degrees**
1/4"	13' 4-1/8"	13' 7-1/8"	13' 10-1/8"	14' 1-1/8"	14' 4-1/8"	14' 7-1/8"
1/2"	13' 5-1/4"	13' 8-1/4"	13' 11-1/4"	14' 2-1/4"	14' 5-1/4"	14' 8-1/4"
3/4"	13' 6-3/8"	13' 9-3/8"	14' 0-3/8"	14' 3-3/8"	14' 6-3/8"	14' 9-3/8"
1”	13' 7-1/2"	13' 10-1/2"	14' 1-1/2"	14' 4-1/2"	14' 7-1/2"	14' 10-1/2"
1 1/4"	13' 8-5/8"	13' 11-5/8"	14' 2-5/8"	14' 5-5/8"	14' 8-5/8"	14' 11-5/8"
1 1/2"	13' 9-3/4"	14' 0-3/4"	14' 3-3/4"	14' 6-3/4"	14' 9-3/4"	15' 0-3/4"
1 3/4"	13' 10-7/8"	14' 1-7/8"	14' 4-7/8"	14' 7-7/8"	14' 10-7/8"	15' 1-7/8"
2”	14' 0"	14' 3"	14' 6"	14' 9"	15' 0"	15' 3"
2 1/4"	14' 1-1/8"	14' 4-1/8"	14' 7-1/8"	14' 10-1/8"	15' 1-1/8"	15' 4-1/8"
2 1/2"	14' 2-1/4"	14' 5-1/4"	14' 8-1/4"	14' 11-1/4"	15' 2-1/4"	15' 5-1/4"
2 3/4"	14' 3-3/8"	14' 6-3/8"	14' 9-3/8"	15' 0-3/8"	15' 3-3/8"	15' 6-3/8"
3”	14' 4-1/2"	14' 7-1/2"	14' 10-1/2"	15' 1-1/2"	15' 4-1/2"	15' 7-1/2"
3 1/4"	14' 5-5/8"	14' 8-5/8"	14' 11-5/8"	15' 2-5/8"	15' 5-5/8"	15' 8-5/8"
3 1/2"	14' 6-3/4"	14' 9-3/4"	15' 0-3/4"	15' 3-3/4"	15' 6-3/4"	15' 9-3/4"
3 3/4"	14' 7-7/8"	14' 10-7/8"	15' 1-7/8"	15' 4-7/8"	15' 7-7/8"	15' 10-7/8"
4”	14' 9"	15' 0"	15' 3"	15' 6"	15' 9"	16' 0"
4 1/4"	14' 10-1/8"	15' 1-1/8"	15' 4-1/8"	15' 7-1/8"	15' 10-1/8"	16' 1-1/8"
4 1/2"	14' 11-1/4"	15' 2-1/4"	15' 5-1/4"	15' 8-1/4"	15' 11-1/4"	16' 2-1/4"
4 3/4"	15' 0-3/8"	15' 3-3/8"	15' 6-3/8"	15' 9-3/8"	16' 0-3/8"	16' 3-3/8"
5”	15' 1-1/2"	15' 4-1/2"	15' 7-1/2"	15' 10-1/2"	16' 1-1/2"	16' 4-1/2"
5 1/4"	15' 2-5/8"	15' 5-5/8"	15' 8-5/8"	15' 11-5/8"	16' 2-5/8"	16' 5-5/8"
5 1/2"	15' 3-3/4"	15' 6-3/4"	15' 9-3/4"	16' 0-3/4"	16' 3-3/4"	16' 6-3/4"

Table 2-K

Continuation of previous table:

MINIMUM TRACK CENTERS ON CURVES TO PROVIDE SUFFICIENT CLEARANCE ON ADJACENT TRACKS						
Where curve elevations are	**And curvature is 7 degrees**	**And curvature is 8 degrees**	**And curvature is 9 degrees**	**And curvature is 10 degrees**	**And curvature is 11 degrees**	**And curvature is 12 degrees**
1/4"	14' 10-1/8"	15'1-1/8"	15' 4-1/8"	15' 7-1/8"	15' 10-1/8"	16' 1-1/8"
1/2"	14' 11-1/4"	15' 2-1/4"	15' 5-1/4"	15' 8-1/4"	15' 11-1/4"	16' 2-1/4"
3/4"	15' 0-3/8"	15' 3-3/8"	15' 6-3/8"	15' 9-3/8"	16' 0-3/8"	16' 3-3/8"
1”	15' 1-1/2"	15' 4-1/2"	15' 7-1/2"	15' 10-1/2"	16' 1-1/2"	16' 4-1/2"
1 1/4"	15' 2-5/8"	15' 5-5/8"	15' 8-5/8"	15' 11-5/8"	16' 2-5/8"	16' 5-5/8"
1 1/2"	15' 3-3/4"	15' 6-3/4"	15' 9-3/4"	16' 0-3/4"	16' 3-3/4"	16' 6-3/4"
1 3/4"	15' 4-7/8"	15' 7-7/8"	15' 10-7/8"	16' 1-7/8"	16' 4-7/8"	16' 7-7/8"
2”	15' 6"	15' 9"	16' 0"	16' 3"	16' 6"	16' 9"
2 1/4"	15' 7-1/8"	15' 10-1/8"	16' 1-1/8"	16' 4-1/8"	16' 7-1/8"	16' 10-1/8"
2 1/2"	15' 8-1/4"	15' 11-1/4"	16' 2-1/4"	16' 5-1/4"	16' 8-1/4"	16' 11-1/4"
2 3/4"	15' 9-3/8"	16' 0-3/8"	16' 3-3/8"	16' 6-3/8"	16' 9-3/8"	17' 0-3/8"
3”	15' 10-1/2"	16' 1-1/2"	16' 4-1/2"	16' 7-1/2"	16' 10-1/2"	17' 1-1/2"
3 1/4"	15' 11-5/8"	16' 2-5/8"	16' 5-5/8"	16' 8-5/8"	16' 11-5/8"	17' 2-5/8"
3 1/2"	16' 0-3/4"	16' 3-3/4"	16' 6-3/4"	16' 9-3/4"	17' 0-3/4"	17' 3-3/4"
3 3/4"	16' 1-7/8"	16' 4-7/8"	16' 7-7/8"	16' 10-7/8"	17' 1-7/8"	17' 4-7/8"
4”	16' 3"	16' 6"	16' 9"	17' 0"	17'3"	17' 6"
4 1/4"	16' 4-1/8"	16' 7-1/8"	16' 10-1/8"	17' 1-1/8"	17' 4-1/8"	17' 7-1/8"
4 1/2"	16' 5-1/4"	16' 8-1/4"	16' 11-1/4"	17' 2-1/4"	17' 5-1/4"	17' 8-1/4"
4 3/4"	16' 6-3/8"	16' 9-3/8"	17' 0-3/8"	17' 3-3/8"	17' 6-3/8"	17' 9-3/8"
5”	16' 7-1/2"	16' 10-1/2"	17' 1-1/2"	17' 4-1/2"	17' 7-1/2"	17' 10-1/2"
5 1/4"	16' 8-5/8"	16' 11-5/8"	17' 2-5/8"	17' 5-5/8"	17' 8-5/8"	17' 11-5/8"
5 1/2"	16' 9-3/4"	17' 0-3/4"	17' 3-3/4"	17' 6-3/4"	17' 9-3/4"	18' 0-3/4"

Table 2-K (cont.)

2.4.3 Track Centers in Crossover Switches

Follow these track center requirements at crossover switches:

1. Align existing or newly constructed tracks to parallel track centers for at least 660 feet in advance of the crossover being installed.
2. When long switch ties extend under both tracks of a crossover:
   - Spike the ties to the same track center measurement as the track they connect. An example is shown in Figure 2-N.
   - Align the tracks approaching the crossover switch to the same track center measurement as the last long switch tie on each end of the crossover, as shown in Figure 2-N.

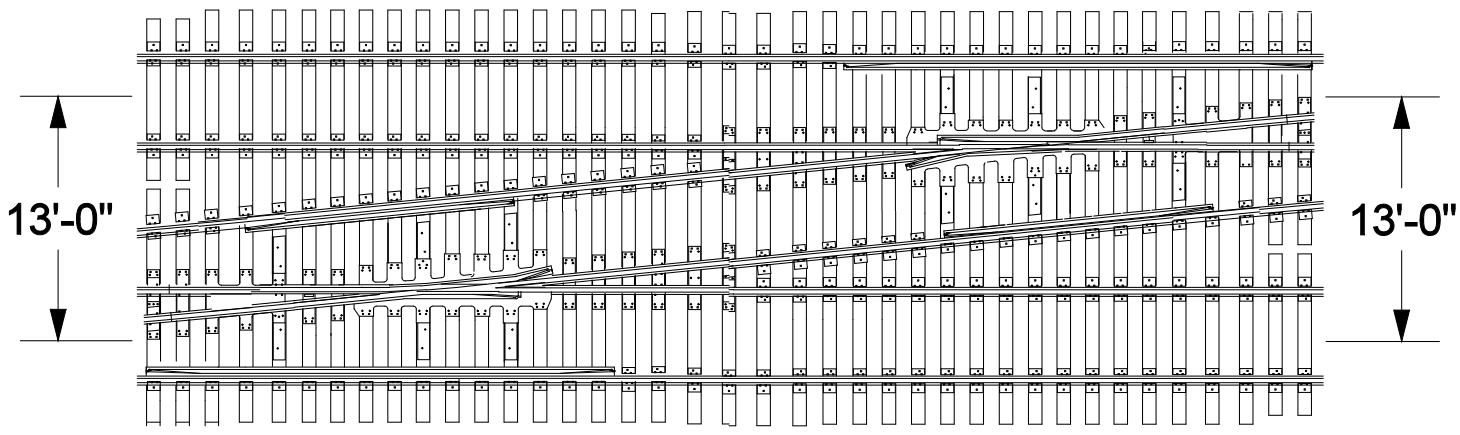

Figure 2-N

2.4.4 Minimum Clearances

Maintain horizontal and vertical clearances according to Standard Drawing No. 0038I and follow these requirements:

1. Maintain appliances not shown on this drawing to a minimum clearance of 9 feet from the centerline of the track and at least 23’4” feet above the top of the rail.
2. Place top-of-rail markers at all structures with 23 feet or less of overhead clearance. Place markers according to Standard Drawing Nos. 0551 and 0552.
3. Where overhead and lateral obstructions are present, such as overpasses, tunnels, bridges, rock cuts, slide fences, platforms etc., minimize track raises and never raise the track above the top of rail markers or alter alignment from stakes.
4. Where markers indicate clearances are close, perform spot surfacing manually.
5. Before raising track above the top-of-rail marker, or aligning track that may create clearance problems, or to report a track shift contact the Clearance Dept. at 402-544-2094 or 402-544-2090.
6. If no top of rail marker is present contact Clearance Dept. prior to raising track.
7. Before the temporary installation of falsework, such as construction scaffolding, that will reduce clearances, the Clearance Dept. must be notified at 402-544-2094 or 402-544-2090. The Clearance Dept. must then protect temporary clearance reduction by recording the falsework modification in the computerized clearance system. Contact the Clearance Dept. when the temporary falsework clearance restriction has been removed.

NOTE: For Clearance information please reference the Clearance Maps and Structures Site (MyUP->Reference->Maps>Clearance Maps and Structures.)

2.4.5 Allowable Superelevation in Adjacent Tracks

To ensure adequate clearance between tracks, maintain adjacent tracks in curves to the limits shown in Table 2-L.

MAXIMUM SUPERELEVATION ALLOWABLE IN ADJACENT OUTSIDE TRACK TO PROVIDE SUFFICIENT CLEARANCE					
Where super-elevation of inside curved track is	**And track centers are 13' 0"**	**And track centers are 13' 6"**	**And track centers are 14' 0"**	**And track centers are 14' 6"**	**And track centers are 15' 0"**
¼"	1/4"	1-1/2"	3"	4-1/2"	5-1/2"
½"	1/2"	1-3/4"	3-1/4"	4-3/4"	5-1/2"
¾"	3/4"	2"	3-1/2"	5"	5-1/2"
1"	1"	2-1/4"	3-3/4"	5-1/4"	5-1/2"
1-1/4"	1-1/4"	2-1/2"	4"	5-1/2"	5-1/2"
1-1/2"	1-1/2"	2-3/4"	4-1/4"	5-1/2"	5-1/2"
1-3/4"	1-3/4"	3"	4-1/2"	5-1/2"	5-1/2"
2"	2"	3-1/4"	4-3/4"	5-1/2"	5-1/2"
2-1/4"	2-1/4"	3-1/2"	5"	5-1/2"	5-1/2"
2-1/2"	2-1/2"	3-3/4"	5-1/4"	5-1/2"	5-1/2"
2-3/4"	2-3/4"	4"	5-1/2"	5-1/2"	5-1/2"
3"	3"	4-1/4"	5-1/2"	5-1/2"	5-1/2"
3-1/4"	3-1/4"	4-1/2"	5-1/2"	5-1/2"	5-1/2"
3-1/2"	3-1/2"	4-3/4"	5-1/2"	5-1/2"	5-1/2"
3-3/4"	3-3/4"	5"	5-1/2"	5-1/2"	5-1/2"
4"	4"	5-1/4"	5-1/2"	5-1/2"	5-1/2"
4-1/4"	4-1/4"	5-1/2"	5-1/2"	5-1/2"	5-1/2"
4-1/2"	4-1/2"	5-1/2"	5-1/2"	5-1/2"	5-1/2"
4-3/4"	4-3/4"	5-1/2"	5-1/2"	5-1/2"	5-1/2"
5"	5"	5-1/2"	5-1/2"	5-1/2"	5-1/2"
5-1/4"	5-1/4"	5-1/2"	5-1/2"	5-1/2"	5-1/2"
5-1/2"	5-1/2"	5-1/2"	5-1/2"	5-1/2"	5-1/2"

Table 2-L

2.5 Grade

Track grade provides a uniform plane that allows trains to negotiate uphill and downhill terrain. Grade is preserved when uniform track raises occur during normal surface and lining operations.

2.5.1 Designated Grade Rail

The inner or low rail of curves is the designated reference rail for maintaining grade.

NOTE: The designated grade rail for referencing grade is the same rail as the designated line rail in tangent track.

2.5.2 Grade Stakes

Grade stakes will be provided for relocated or newly constructed tracks to help establish the proper grade.

When necessary, grade stakes will be provided to re-establish or modify existing grade.

2.5.3 Multiple Track Grade Crossings

Establish and maintain grade crossings to a uniform plane across all tracks as follows:

1. Where practicable, establish and maintain the difference between the top-of-rail elevation of adjacent tracks to within 1 inch of each other:
   - Through grade crossings where track centers are within 20 feet of each other as shown in Figure 2-O.

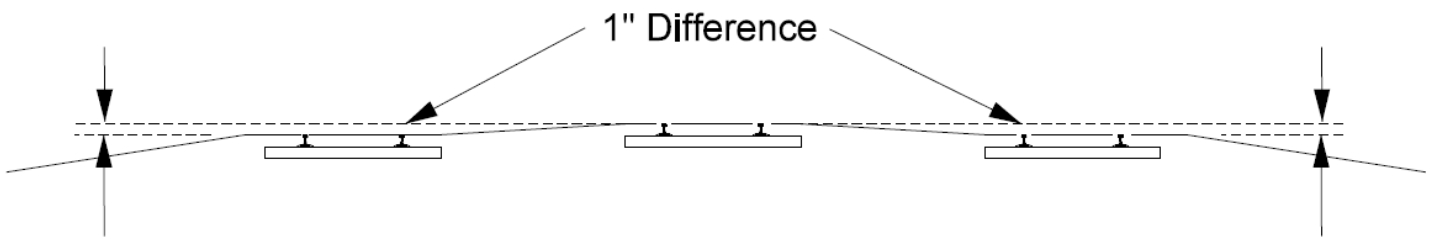

Figure 2-O

   - Through grade crossings that exist in curved track that contains superelevation as shown in Figure 2-P.

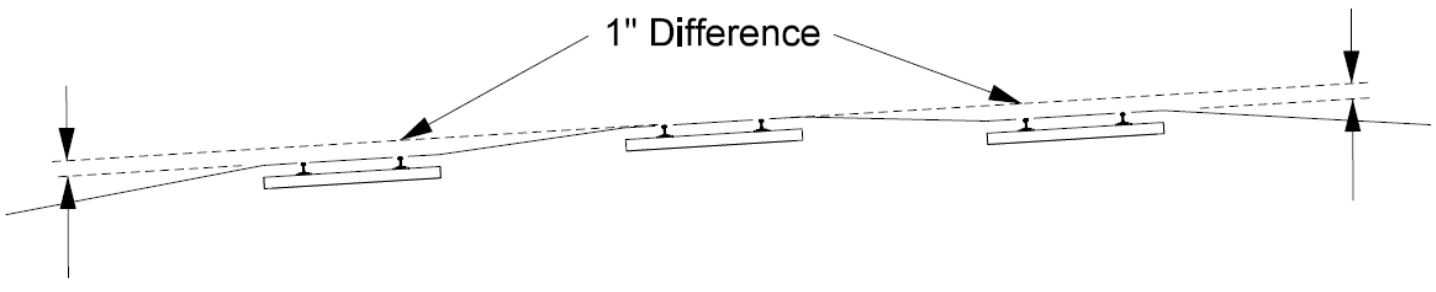

Figure 2-P

2. Stretch a string line across the tops of the rails of all existing tracks to verify the top-of-rail relationship through grade crossings. Use the highest track as a reference to determine that the lower tracks conform.

2.5.4 Turnouts and Crossovers

The top-of-rail elevation of tracks approaching crossover switches should be as level as practicable with each other for at least 660 feet in advance of main line crossovers.

The top-of-rail elevation of main and diverging tracks must be level with each other through the turnout, and, where possible, for 250 feet beyond the signal or fouling point, whichever distance is greater.

2.5.5 Vertical Curves

Vertical curves connect the intersection of different grades. Curves that connect two uphill grades are summit curves, and curves that connect two downhill grades are sag curves.

Design vertical curves according to Standard Drawing No. 0016.

2.6 Surface

Surface is the uniform state of profile, superelevation, and crosslevel as determined by the top-of-rail elevation and the relationship of opposite rails to each other at a specific point.

2.6.1 Measuring Crosslevel and Superelevation

Crosslevel, utilizing a level board, is measured by subtracting the difference in height between the top surface of one rail and the top surface of the opposite rail.

- On tangent track, both rails should be the same height (zero crosslevel).
- On spirals and curves, the outer rail must not be lower than the inner rail (reverse elevation).

Follow these requirements for measuring crosslevel and superelevation:

1. Use an approved track level board to measure crosslevel when track is disturbed for repair work, surfacing, or inspections.
2. Test the level board for accuracy before use as follows:
   a. Set the level board on a nearly level track.
   b. Obtain a reading. Note the following:
      - Which rail is shown to be higher.
      - The location of the right-hand or left-hand edge of the bubble on the graduated scale.

c. Turn the level board end-for-end and place it at the exact location where the previous reading was taken.

d. Obtain a reading. Note the following:

- Which rail is shown to be higher.
- The location of the right-hand or left-hand edge of the bubble on the graduated scale.

e. Determine if both readings indicate the same rail being higher and if the bubble's edge stopped at the same location on the graduated scale during each reading.

- If yes, the level board is properly calibrated. Go to step 3.
- If no, go to step f.

f. Adjust the bubble screw in a direction to split the difference between the two readings taken. Repeat steps a through e until the level board provides the same reading when placed on the rail in opposite directions.

3. Measure crosslevel across the top of the two running rails of the track at right angles to the track alignment as shown in Figure 2-Q.

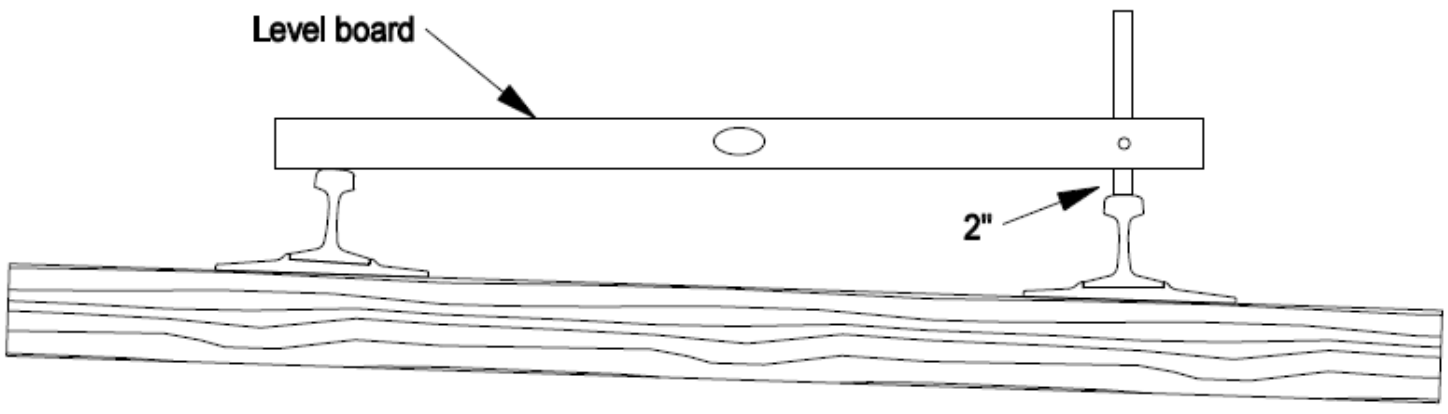

Figure 2-Q

4. Check crosslevel at the beginning of surfacing operations and at regular intervals behind automatic tamping machines.
5. Check tangent track and the full body of curves every 660 feet and at every 1/4-inch superelevation change in spirals of curves.

2.6.2 Measuring Warp (twist)

Warp (twist) is the difference in crosslevel between any two points less than 62 feet apart. Excessive warp contributes to wheel climb derailments.

To determine the amount of warp on tangent track, add the largest two opposite rail measurements within 62 feet, as shown in Figure 2-R.

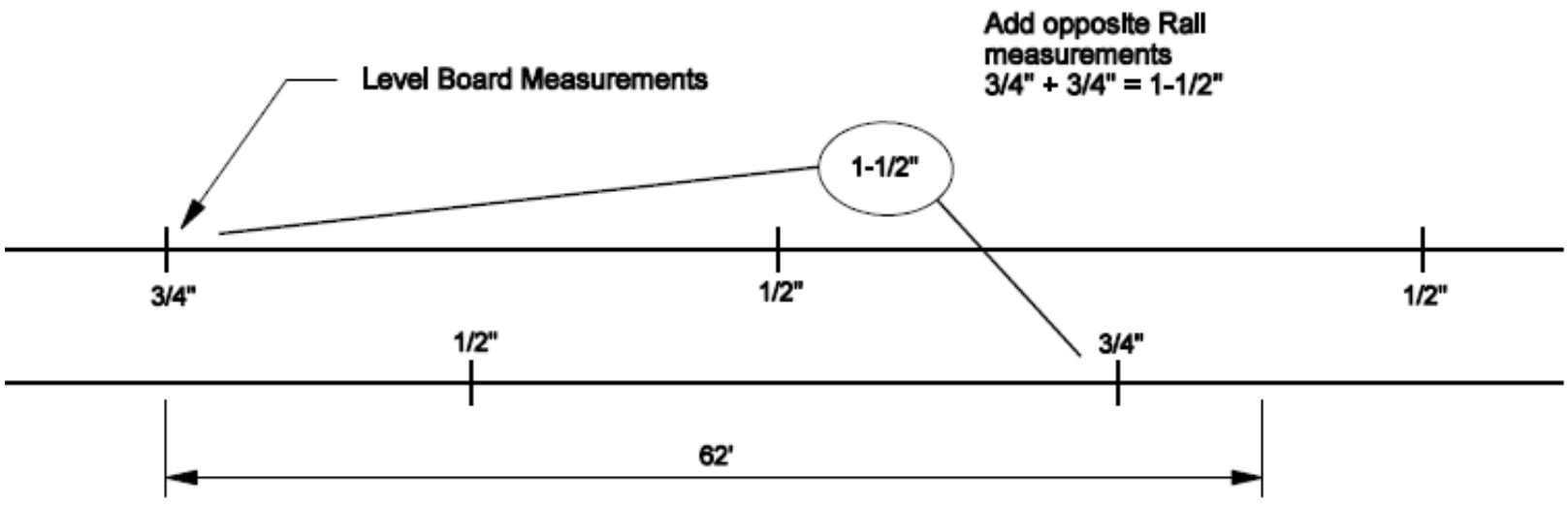

Figure 2-R

To determine the amount of warp in a curve or spiral (Figure 2-S), do one of the following:

- Subtract largest and smallest same rail measurements within 62 feet.

  or

- Add the largest two opposite rail measurements within 62 feet.

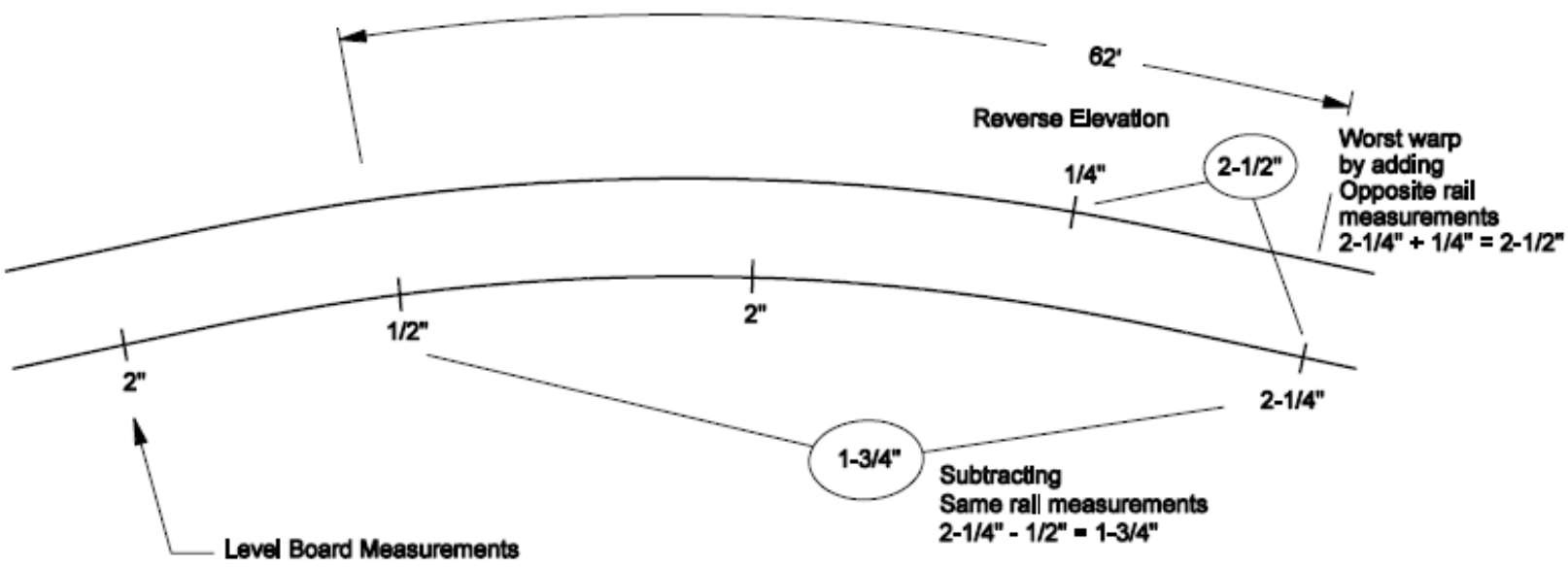

Figure 2-S

- Where the elevation at any point in a curve equals or exceeds 6 inches, the difference (warp) in crosslevel within 62 feet between that point and a point with greater

elevation may not be more than 1-1/2 inches regardless of track class. See Figure 2-T.

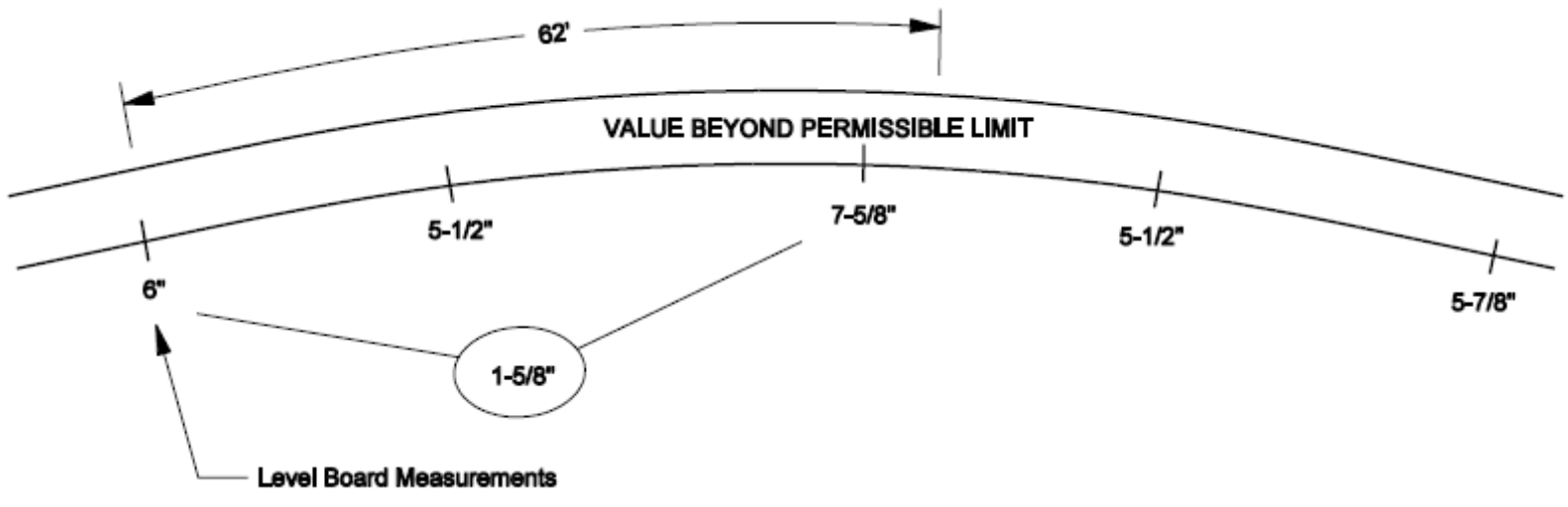

Figure 2-T

- To control harmonics on Class 2 through 5 jointed track with staggered joints, ensure that the crosslevel differences do not exceed 1-1/4 inches in all of six consecutive pairs of joints, as created by 7 low joints. See Figure 2-U.
  - Track with joints staggered less than 10 feet shall not be considered as having staggered joints.
  - Joints within the 7 low joints outside of the regular joint spacing shall not be considered as joints.

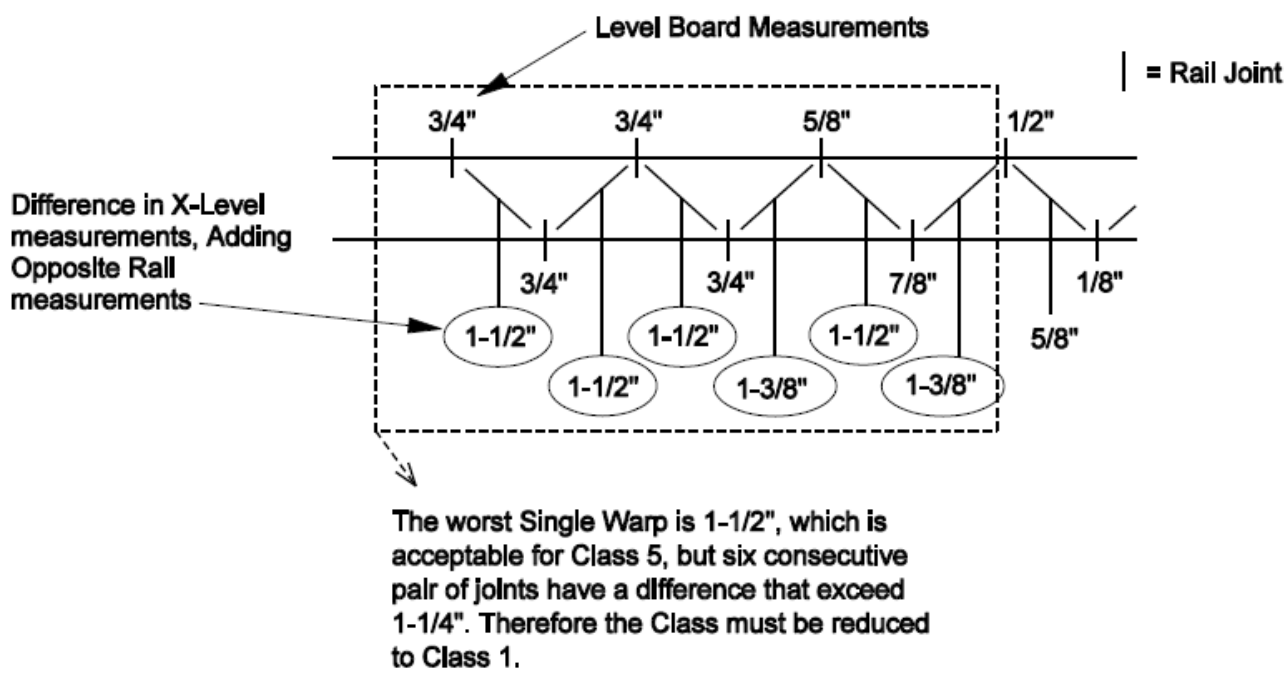

Figure 2-U

2.6.3 Tank Car Warp

Variable Tank Car Warp (VTCW) is based on the rate of change of crosslevel over a certain distance. The exception occurs when the crosslevel rate change (or twist) for any length of track between 32 feet and 61 feet exceeds a certain rate threshold that is prone to cause wheel lift. Most cars (especially tank cars) have truck centers between 30 feet and 57 feet. Curves are designed at a maximum rate of 2.45 inches per 100 feet (1 inch in 44 feet). This exception writes in all curves and on tangents if there is an alignment deviation greater than 3/4 inch within 20 feet of VTCW. The VCTW exception thresholds are in Table 2-M.

Variable Tank Car Warp	Severity	Class 1	Class 2	Class 3	Class 4	Class 5
	Critical	5 3/8	4 3/4	3 3/4	3 5/16	3 1/8
	Urgent	4 7/8	4 1/4	3 1/2	2 7/8	2 7/8

Table 2-M

2.6.4 Measuring Profile

Track profile is the longitudinal elevation of the running rails. Measure track profile along the top of the running rails as follows:

Use a 62-foot chord (string) to obtain track profile measurements for Class 1-5 track. Use a 31-foot, 62-foot and 124-foot chord to obtain track profile measurements for Class 6 track.

Measure the distance between the mid-ordinate or center of the applicable chord and the top of the rail head to determine deviation from uniform profile as shown in Figure 2-V.

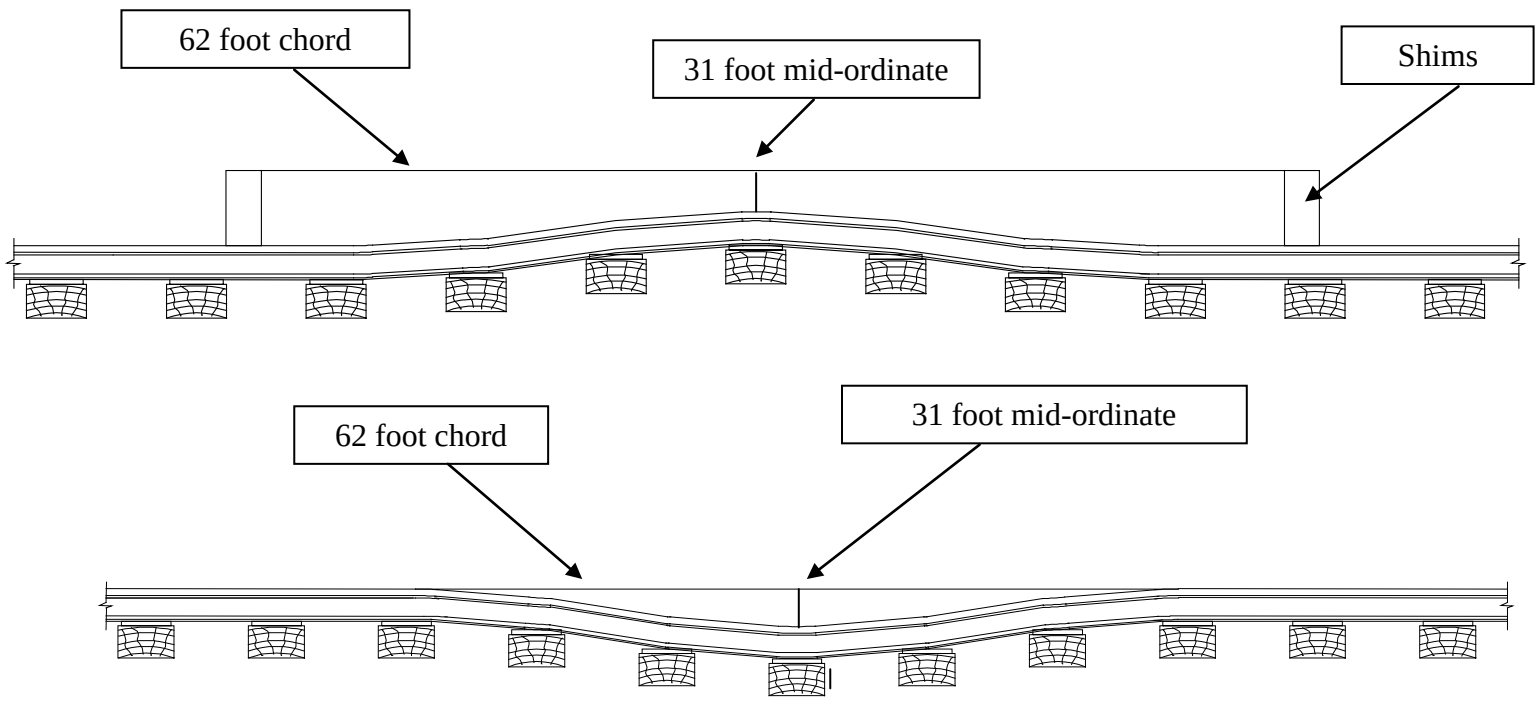

Figure 2-V

If the mid-ordinate of the chord contacts the rail head, place 1-inch or greater shims on top of the rail head at the ends of the applicable chord.

NOTE: If shims are used, subtract the shim thickness from the mid-ordinate measurement to determine the exact reading.

2.6.5 Track Surface Limits

1. Track Surface Limits - Do not allow track surface to deviate from uniform profile and crosslevel more than the following thresholds for the applicable class of track. Measure deviations as prescribed by each category.
   - If maximum crosslevel in a curve is 6” or more and there is a difference in crosslevel between any 2 points less than 62 feet apart of more than 1 ½” the track is not good for any class of track.
   - To control harmonics on Class 2 through 5 in jointed track with staggered joints, the cross-level difference shall not exceed 1-1/4” in all of six consecutive pairs of joints, as created by 7 low joints. Track with joints staggered less than 10 feet shall not be considered as having staggered joints. Joints within the 7 low joints outside of the regular joint spacing shall not be considered as joints for measurement.

Table 2-O shows Urgent Limits.

Track Surface	Class 1	Class 2	Class 3	Class 4	Class 5	Class 6
The maximum crosslevel on the outside rail of a curve may not be more than…	5-3/4"	5-3/4"	5-3/4"	5-3/4"	5-3/4"	5-3/4”
The runoff in any 31 feet of rail at the end of a raise may not be more than…	N/A	N/A	N/A	N/A	N/A	N/A
The deviation from uniform profile on either rail at the mid-ordinate of a 31-foot cord may not be more than...	N/A	N/A	N/A	N/A	N/A	15/16”
The deviation from uniform profile on either rail at the mid-ordinate of a 62-foot cord may not be more than...	2-7/8"	2-5/8"	2-1/8"	1-7/8"	1-3/16"	15/16”
The deviation from uniform profile on either rail at the mid-ordinate of a 124-foot cord may not be more than...	N/A	N/A	N/A	N/A	N/A	1-5/8"
The deviation from zero crosslevel at any point on tangent may not be more than…	2-13/16"	1-15/16"	1-11/16"	1-3/16"	15/16"	15/16”
The difference in crosslevel between any 2 points less than 62 feet apart may not be more than…	2-15/16"	2-3/16"	1-15/16"	1-11/16"	1-7/16"	1-7/16”
The variation of crosslevel on the spiral per 31 feet may not be more than:	1-15/16"	1-11/16"	1-3/16"	15/16"	11/16"	9/16”
The difference in crosslevel between any 2 points in a curve less than 10 feet apart (Short Warp) may not be more than….	NA	NA	NA	NA	NA	1”

Table 2-O

Table 2-P shows Critical Limits.

Track Surface	Class 1	Class 2	Class 3	Class 4	Class 5	Class 6
The maximum crosslevel on the outside rail of a curve may not be more than…	6"	6"	6"	6"	6"	6"
The runoff in any 31 feet of rail at the end of a raise may not be more than…	3-1/2"	3"	2"	1-1/2"	1"	N/A
The deviation from uniform profile on either rail at the mid-ordinate of a 31-foot cord may not be more than...	N/A	N/A	N/A	N/A	N/A	1"
The deviation from uniform profile on either rail at the mid-ordinate of a 62-foot cord may not be more than...	3"	2-3/4"	2-1/4"	2"	1-1/4"	1"
The deviation from uniform profile on either rail at the mid-ordinate of a 124-foot cord may not be more than...	N/A	N/A	N/A	N/A	N/A	1-3/4"
The deviation from zero crosslevel at any point on tangent may not be more than…	3"	2"	1-3/4"	1-1/4"	1"	15/16"
The difference in crosslevel between any 2 points less than 62 feet apart may not be more than…	3"	2-1/4"	2"	1-3/4"	1-1/2"	1-1/2"
The variation of crosslevel on the spiral per 31 feet may not be more than:	2"	1 3/4"	1 1/4"	1"	3/4"	5/8"
The difference in crosslevel between any 2 points in a curve less than 10 feet apart (Short Warp) may not be more than…	N/A	N/A	N/A	N/A	N/A	1-1/4"

Table 2-P

2. Multiple Track Surface Deviation – Class 6 track only.

- Do not allow track surface to deviate from uniformity more than the threshold for **three or more non-overlapping deviations** occurring within a distance equal to five times the specified cord length.

Table 2-R shows Urgent Limits for Class 6.

Track Surface	Track Class
	6
The deviation from uniform profile on either rail at the mid-ordinate of a 31-foot cord may not be more than...	**11/16”**
The deviation from uniform profile on either rail at the mid-ordinate of a 62-foot cord may not be more than...	**11/16"**
The deviation from uniform profile on either rail at the mid-ordinate of a 124-foot cord may not be more than...	**1-3/16"**

Table 2-R

Table 2-S shows Critical Limits for Class 6.

Track Surface	Track Class
	6
The deviation from uniform profile on either rail at the mid-ordinate of a 31-foot cord may not be more than...	**3/4"**
The deviation from uniform profile on either rail at the mid-ordinate of a 62-foot cord may not be more than...	**3/4"**
The deviation from uniform profile on either rail at the mid-ordinate of a 124-foot cord may not be more than...	**1-1/4"**

Table 2-S

2.6.6 Spirals

Spirals designed into curves gradually transition alignment and superelevation from tangents into curves, from curves into tangents, and between curves of varying degrees. Follow these requirements:

1. Curves of 10 minutes (00° 10' 00") or greater require spirals.
2. The maximum rate of change in superelevation must not exceed 1 inch per 44 feet of distance. Limit this rate of change to curves with a maximum speed of less than 50 MPH.
3. Use Table 2-T to determine the distance requirements for each 1-inch change of superelevation.

Distance Between Each Inch Change of Superelevation		
Maximum Speed (1)	**Desired Distance for New and Existing High Speed Tracks (2)**	**Minimum Distance for Canyon and Heavy Grade Territory (3)**
20 MPH	44 feet	44 feet
25 MPH	44 feet	44 feet
30 MPH	44 feet	44 feet
35 MPH	44 feet	44 feet
40 MPH	47 feet	44 feet
45 MPH	53 feet	44 feet
50 MPH	59 feet	49 feet
55 MPH	65 feet	54 feet
60 MPH	70 feet	59 feet
65 MPH	76 feet	64 feet
70 MPH	82 feet	69 feet
75 MPH	88 feet	73 feet
80 MPH	94 feet	78 feet
85 MPH	100 feet	83 feet
90 MPH	106 feet	88 feet
95 MPH	112 feet	93 feet
100 MPH	118 feet	98 feet
105 MPH	124 feet	103 feet
110 MPH	130 feet	108 feet

Table 2-T

4. If the length of the spiral permits, run superelevation off at a uniform rate over the entire length of the spiral, with full superelevation through the body of the curve and no superelevation on tangent track.
5. If no spirals exist, or spirals are too short to meet the required rate of runoff, a maximum of 1 inch of superelevation may be run onto tangent track.
6. When the tangent between two curves is too short to provide the minimum length of runoff for the authorized superelevation:
   - Divide the tangent into two parts in proportion to the degree of curvature of the adjoining curves.
   - If possible, place the longer segment adjacent to the curve of greater degree.
7. Maintain at least 100 feet of level track between reverse curves, regardless of whether tangent track exists or not, to ensure that cars can right themselves between curves.
8. Ensure that compound curves have full superelevation for the higher-degree curve carried through the entire higher-degree portion of the curve and reduced superelevation on the lower-degree portion of the curve within the prescribed runoff rates.

2.6.7 Superelevation

The outer or high rail of curves is the designated reference rail for installing and maintaining superelevation. Maintain superelevation as provided on curve markers and/or designated on the high rail of curves.

- The EFMS curve database that can be accessed through the Engineering Website may be used to determine approved elevations and degree of curvature when there are no field markings on the rail. If the accuracy of the EFMS curve database is in doubt, the Manager of Track Maintenance should contact a surveying field engineer. Changes to the database cannot be made without Chief Engineer Approval.

NOTE: Designated superelevation may not be less than 3/4 inch or greater than 5 inches in any curve.

Install approved superelevation in main tracks when track renewals involve surfacing and lining.

Unless approved by the Chief Engineer the designated superelevation is 1 inch unbalanced.

The Chief Engineer must approve all changes to designated superelevation.

All speeds are rounded down to the nearest 5 MPH.

Use Table 2-U to design new superelevation.

CURVE SPEEDS (Miles Per Hour)																				
Curve		Unbalance Condition	SUPERELEVATION (Inches)																	
Deg	Min		0.75	1.00	1.25	1.50	1.75	2.00	2.25	2.50	2.75	3.00	3.25	3.50	3.75	4.00	4.25	4.50	4.75	5.00
0	30	0 Inch	45	50	55	65	70	75	80	80	85	90	95	100	100	105	110	110	115	115
		1 Inch	70	75	80	80	85	90	95	100	100	105	110	110	115	115	120	125	125	130
		2 Inch	85	90	95	100	100	105	110	110	115	115	120	125	125	130	130	135	135	140
		3 Inch	100	105	110	110	115	115	120	125	125	130	130	135	135	140	140	145	145	150
1	00	0 Inch	30	35	40	45	50	50	55	55	60	65	65	70	70	75	75	80	80	80
		1 Inch	50	50	55	55	60	65	65	70	70	75	75	80	80	80	85	85	90	90
		2 Inch	60	65	65	70	70	75	75	80	80	80	85	85	90	90	90	95	95	100
		3 Inch	70	75	75	80	80	80	85	85	90	90	90	95	95	100	100	100	105	105
1	30	0 Inch	25	30	30	35	40	40	45	45	50	50	55	55	55	60	60	65	65	65
		1 Inch	40	40	45	45	50	50	55	55	55	60	60	65	65	65	70	70	70	75
		2 Inch	50	50	55	55	55	60	60	65	65	65	70	70	70	75	75	75	80	80
		3 Inch	55	60	60	65	65	65	70	70	70	75	75	75	80	80	80	80	85	85
2	00	0 Inch	20	25	25	30	35	35	40	40	40	45	45	50	50	50	55	55	55	55
		1 Inch	35	35	40	40	40	45	45	50	50	50	55	55	55	55	60	60	60	65
		2 Inch	40	45	45	50	50	50	55	55	55	55	60	60	60	65	65	65	65	70
		3 Inch	50	50	55	55	55	55	60	60	60	65	65	65	65	70	70	70	70	75
2	30	0 Inch	20	20	25	25	30	30	35	35	35	40	40	40	45	45	45	50	50	50
		1 Inch	30	30	35	35	35	40	40	40	45	45	45	50	50	50	50	55	55	55
		2 Inch	35	40	40	40	45	45	45	50	50	50	50	55	55	55	55	60	60	60
		3 Inch	45	45	45	50	50	50	50	55	55	55	55	60	60	60	60	65	65	65
3	00	0 Inch	15	20	20	25	25	30	30	30	35	35	35	40	40	40	40	45	45	45
		1 Inch	25	30	30	30	35	35	35	40	40	40	40	45	45	45	50	50	50	50
		2 Inch	35	35	35	40	40	40	40	45	45	45	50	50	50	50	50	55	55	55
		3 Inch	40	40	40	45	45	45	50	50	50	50	50	55	55	55	55	55	60	60
3	30	0 Inch	15	20	20	20	25	25	30	30	30	30	35	35	35	40	40	40	40	45
		1 Inch	25	25	30	30	30	30	35	35	35	40	40	40	40	45	45	45	45	45
		2 Inch	30	30	35	35	35	40	40	40	40	45	45	45	45	45	50	50	50	50
		3 Inch	35	40	40	40	40	45	45	45	45	45	50	50	50	50	50	55	55	55
4	00	0 Inch	15	15	20	20	25	25	25	25	30	30	30	35	35	35	35	40	40	40
		1 Inch	25	25	25	25	30	30	30	35	35	35	35	40	40	40	40	40	45	45
		2 Inch	30	30	30	35	35	35	35	40	40	40	40	40	45	45	45	45	45	50
		3 Inch	35	35	35	40	40	40	40	40	45	45	45	45	45	50	50	50	50	50
4	30	0 Inch	15	15	15	20	20	25	25	25	25	30	30	30	30	35	35	35	35	35
		1 Inch	20	25	25	25	25	30	30	30	30	35	35	35	35	35	40	40	40	40
		2 Inch	25	30	30	30	30	35	35	35	35	35	40	40	40	40	40	45	45	45
		3 Inch	30	35	35	35	35	35	40	40	40	40	40	45	45	45	45	45	45	50

CURVE SPEEDS (Miles Per Hour)																				
Curve		Unbalance Condition	SUPERELEVATION (Inches)																	
Deg	Min		0.75	1.00	1.25	1.50	1.75	2.00	2.25	2.50	2.75	3.00	3.25	3.50	3.75	4.00	4.25	4.50	4.75	5.00
5	00	0 Inch	10	15	15	20	20	20	20	25	25	25	30	30	30	30	30	35	35	35
		1 Inch	20	20	25	25	25	25	30	30	30	30	30	35	35	35	35	35	40	40
		2 Inch	25	25	30	30	30	30	30	35	35	35	35	35	40	40	40	40	40	40
		3 Inch	30	30	30	35	35	35	35	35	40	40	40	40	40	40	45	45	45	45
5	30	0 Inch	10	15	15	15	20	20	20	25	25	25	25	30	30	30	30	30	35	35
		1 Inch	20	20	20	25	25	25	25	30	30	30	30	30	35	35	35	35	35	35
		2 Inch	25	25	25	30	30	30	30	30	35	35	35	35	35	35	40	40	40	40
		3 Inch	30	30	30	30	35	35	35	35	35	35	40	40	40	40	40	40	40	45
6	00	0 Inch	10	15	15	15	20	20	20	20	25	25	25	25	25	30	30	30	30	30
		1 Inch	20	20	20	20	25	25	25	25	25	30	30	30	30	30	35	35	35	35
		2 Inch	25	25	25	25	25	30	30	30	30	30	35	35	35	35	35	35	40	40
		3 Inch	25	30	30	30	30	30	35	35	35	35	35	35	40	40	40	40	40	40
6	30	0 Inch	10	10	15	15	15	20	20	20	20	25	25	25	25	25	30	30	30	30
		1 Inch	15	20	20	20	20	25	25	25	25	25	30	30	30	30	30	30	35	35
		2 Inch	20	25	25	25	25	25	30	30	30	30	30	30	35	35	35	35	35	35
		3 Inch	25	25	30	30	30	30	30	30	35	35	35	35	35	35	35	40	40	40
7	00	0 Inch	10	10	15	15	15	20	20	20	20	20	25	25	25	25	25	30	30	30
		1 Inch	15	20	20	20	20	20	25	25	25	25	25	30	30	30	30	30	30	30
		2 Inch	20	20	25	25	25	25	25	30	30	30	30	30	30	30	35	35	35	35
		3 Inch	25	25	25	30	30	30	30	30	30	30	35	35	35	35	35	35	35	40
7	30	0 Inch	10	10	15	15	15	15	20	20	20	20	20	25	25	25	25	25	30	30
		1 Inch	15	15	20	20	20	20	20	25	25	25	25	25	30	30	30	30	30	30
		2 Inch	20	20	20	25	25	25	25	25	30	30	30	30	30	30	30	35	35	35
		3 Inch	25	25	25	30	30	30	30	30	30	30	35	35	35	35	35	35	35	40
8	00	0 Inch	10	10	10	15	15	15	20	20	20	20	20	25	25	25	25	25	25	25
		1 Inch	15	15	20	20	20	20	20	25	25	25	25	25	25	25	30	30	30	30
		2 Inch	20	20	20	25	25	25	25	25	25	25	30	30	30	30	30	30	30	35
		3 Inch	25	25	25	25	25	25	30	30	30	30	30	30	30	35	35	35	35	35
8	30	0 Inch	10	10	10	15	15	15	15	20	20	20	20	20	25	25	25	25	25	25
		1 Inch	15	15	15	20	20	20	20	20	25	25	25	25	25	25	25	30	30	30
		2 Inch	20	20	20	20	25	25	25	25	25	25	25	30	30	30	30	30	30	30
		3 Inch	25	25	25	25	25	25	25	30	30	30	30	30	30	30	30	35	35	35
9	00	0 Inch	10	10	10	15	15	15	15	15	20	20	20	20	20	25	25	25	25	25
		1 Inch	15	15	15	15	20	20	20	20	20	25	25	25	25	25	25	25	30	30
		2 Inch	20	20	20	20	20	25	25	25	25	25	25	25	30	30	30	30	30	30
		3 Inch	20	25	25	25	25	25	25	25	30	30	30	30	30	30	30	30	35	35
9	30	0 Inch	10	10	10	15	15	15	15	15	20	20	20	20	20	20	25	25	25	25
		1 Inch	15	15	15	15	20	20	20	20	20	20	25	25	25	25	25	25	25	30
		2 Inch	20	20	20	20	20	20	25	25	25	25	25	25	25	30	30	30	30	30
		3 Inch	20	20	25	25	25	25	25	25	25	30	30	30	30	30	30	30	30	30
10	00	0 Inch	10	10	10	10	15	15	15	15	15	20	20	20	20	20	20	25	25	25
		1 Inch	15	15	15	15	15	20	20	20	20	20	20	25	25	25	25	25	25	25
		2 Inch	15	20	20	20	20	20	20	25	25	25	25	25	25	25	25	30	30	30
		3 Inch	20	20	20	25	25	25	25	25	25	25	25	30	30	30	30	30	30	30
10	30	0 Inch	10	10	10	10	15	15	15	15	15	20	20	20	20	20	20	20	25	25
		1 Inch	15	15	15	15	15	20	20	20	20	20	20	20	25	25	25	25	25	25
		2 Inch	15	20	20	20	20	20	20	20	25	25	25	25	25	25	25	25	30	30
		3 Inch	20	20	20	20	25	25	25	25	25	25	25	25	30	30	30	30	30	30
11	00	0 Inch	5	10	10	10	10	15	15	15	15	15	20	20	20	20	20	20	20	25
		1 Inch	15	15	15	15	15	15	20	20	20	20	20	20	20	25	25	25	25	25
		2 Inch	15	15	20	20	20	20	20	20	20	25	25	25	25	25	25	25	25	30
		3 Inch	20	20	20	20	20	25	25	25	25	25	25	25	25	30	30	30	30	30

CURVE SPEEDS (Miles Per Hour)																				
Curve		Unbalance Condition	SUPERELEVATION (Inches)																	
Deg	Min		0.75	1.00	1.25	1.50	1.75	2.00	2.25	2.50	2.75	3.00	3.25	3.50	3.75	4.00	4.25	4.50	4.75	5.00
11	30	0 Inch	5	10	10	10	10	15	15	15	15	15	20	20	20	20	20	20	20	20
		1 Inch	10	15	15	15	15	15	20	20	20	20	20	20	20	20	25	25	25	25
		2 Inch	15	15	20	20	20	20	20	20	20	20	25	25	25	25	25	25	25	25
		3 Inch	20	20	20	20	20	20	25	25	25	25	25	25	25	25	30	30	30	30
12	00	0 Inch	5	10	10	10	10	15	15	15	15	15	15	20	20	20	20	20	20	20
		1 Inch	10	15	15	15	15	15	15	20	20	20	20	20	20	20	25	25	25	25
		2 Inch	15	15	15	20	20	20	20	20	20	20	25	25	25	25	25	25	25	25
		3 Inch	20	20	20	20	20	20	25	25	25	25	25	25	25	25	25	25	30	30
12	30	0 Inch	5	10	10	10	10	15	15	15	15	15	15	20	20	20	20	20	20	20
		1 Inch	10	15	15	15	15	15	15	20	20	20	20	20	20	20	20	25	25	25
		2 Inch	15	15	15	20	20	20	20	20	20	20	20	25	25	25	25	25	25	25
		3 Inch	20	20	20	20	20	20	20	25	25	25	25	25	25	25	25	25	25	30
13	00	0 Inch	5	10	10	10	10	10	15	15	15	15	15	15	20	20	20	20	20	20
		1 Inch	10	10	15	15	15	15	15	15	20	20	20	20	20	20	20	20	25	25
		2 Inch	15	15	15	15	20	20	20	20	20	20	20	20	25	25	25	25	25	25
		3 Inch	20	20	20	20	20	20	20	20	25	25	25	25	25	25	25	25	25	25
13	30	0 Inch	5	10	10	10	10	10	15	15	15	15	15	15	15	20	20	20	20	20
		1 Inch	10	10	15	15	15	15	15	15	15	20	20	20	20	20	20	20	20	25
		2 Inch	15	15	15	15	15	20	20	20	20	20	20	20	20	25	25	25	25	25
		3 Inch	15	20	20	20	20	20	20	20	20	25	25	25	25	25	25	25	25	25
14	00	0 Inch	5	10	10	10	10	10	15	15	15	15	15	15	15	20	20	20	20	20
		1 Inch	10	10	15	15	15	15	15	15	15	20	20	20	20	20	20	20	20	20
		2 Inch	15	15	15	15	15	20	20	20	20	20	20	20	20	20	25	25	25	25
		3 Inch	15	20	20	20	20	20	20	20	20	20	25	25	25	25	25	25	25	25
14	30	0 Inch	5	5	10	10	10	10	10	15	15	15	15	15	15	15	20	20	20	20
		1 Inch	10	10	10	15	15	15	15	15	15	15	20	20	20	20	20	20	20	20
		2 Inch	15	15	15	15	15	15	20	20	20	20	20	20	20	20	20	25	25	25
		3 Inch	15	15	20	20	20	20	20	20	20	20	20	25	25	25	25	25	25	25
15	00	0 Inch	5	5	10	10	10	10	10	15	15	15	15	15	15	15	20	20	20	20
		1 Inch	10	10	10	15	15	15	15	15	15	15	20	20	20	20	20	20	20	20
		2 Inch	15	15	15	15	15	15	20	20	20	20	20	20	20	20	20	20	25	25
		3 Inch	15	15	20	20	20	20	20	20	20	20	20	20	25	25	25	25	25	25

Table 2-U

2.6.8 Curve Markers

Place and maintain curve markers according to Standard Drawing No. 0015 as follows:

1. Place curve markers in milepost ascending order as identified in Figure 2-W, Figure 2-X, and Figure 2-Y. Refer also to Table 2-V.

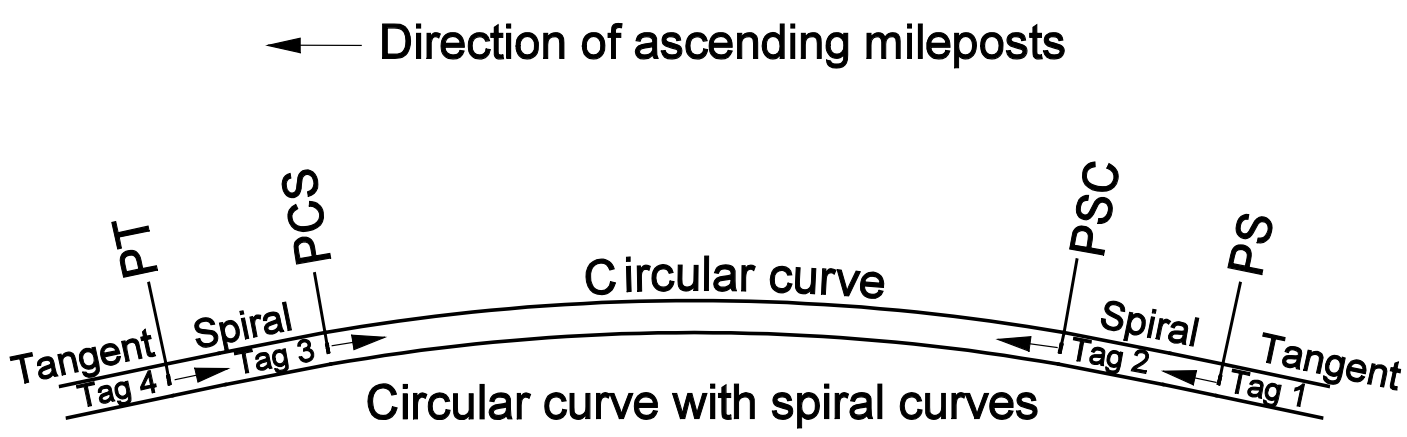

Figure 2-W

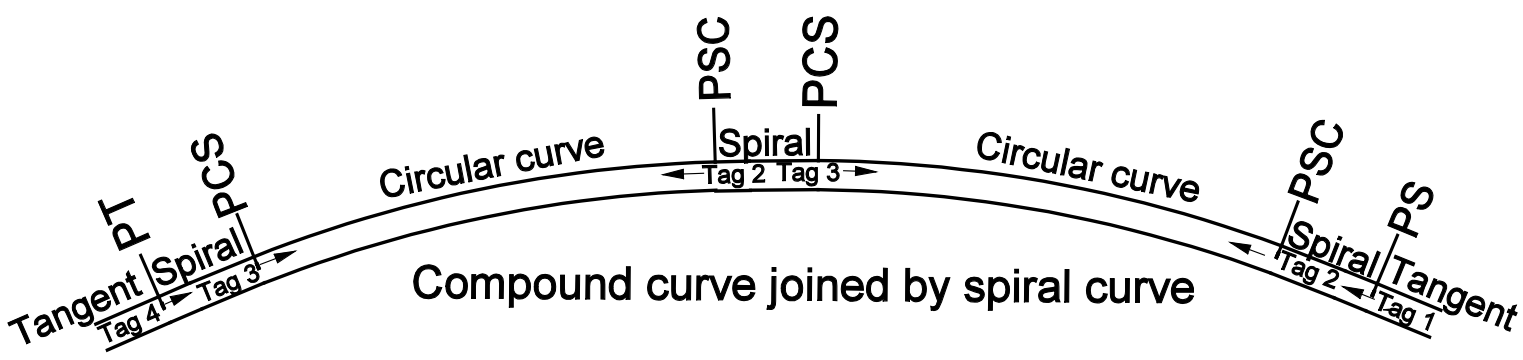

Figure 2-X

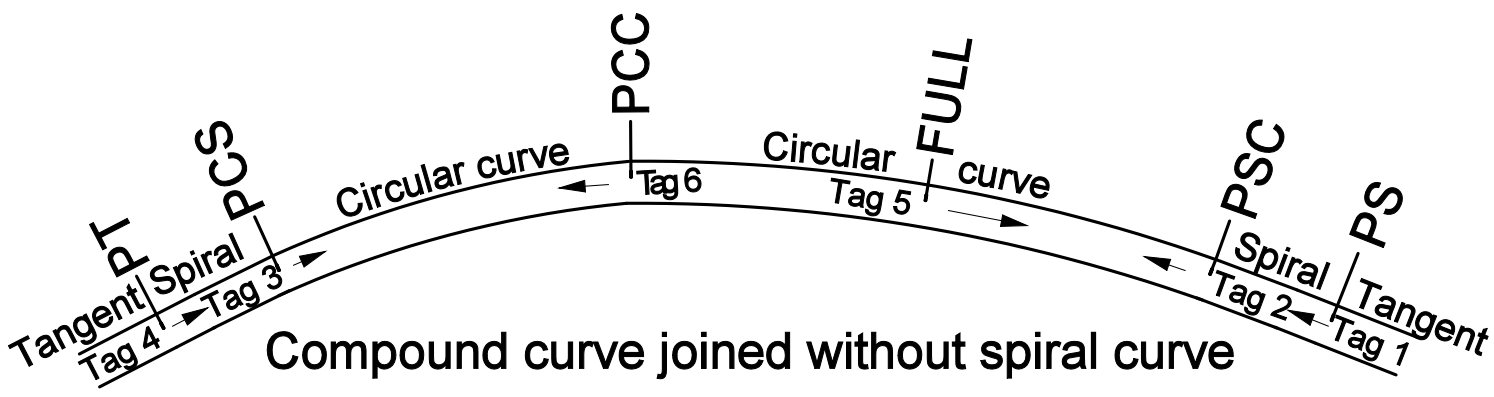

Figure 2-Y

Curve Marker Identification		
Abbreviation	**Full Name**	**Description**
PS	Point of Spiral	Tangent ends and spiral begins
PSC	Point of Spiral to Curve	Spiral ends and full body begins
PCC	Point of Compound Curve	Curve degree changes with no spiral
PCS	Point of Curve to Spiral	Full body ends and spiral begins
PT	Point of Tangent	Spiral ends and tangent begins

Table 2-V

2. Place curve markers on top of ties 6 to 8 inches from the base of the high rail toward the center of the track. Locations for mounting markers to wood and concrete ties are shown in Figure 2-Z and Figure 2-AA.

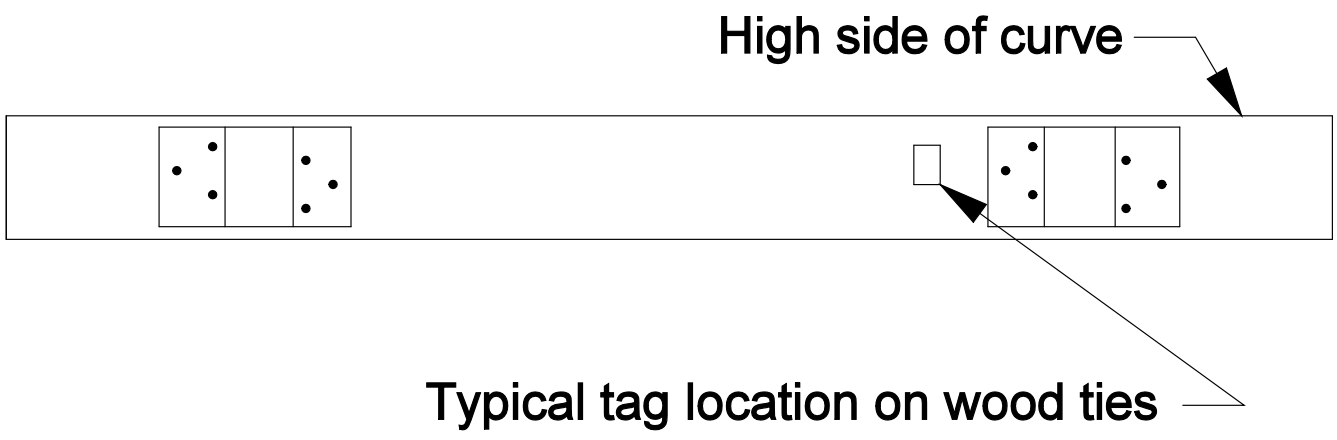

Figure 2-Z

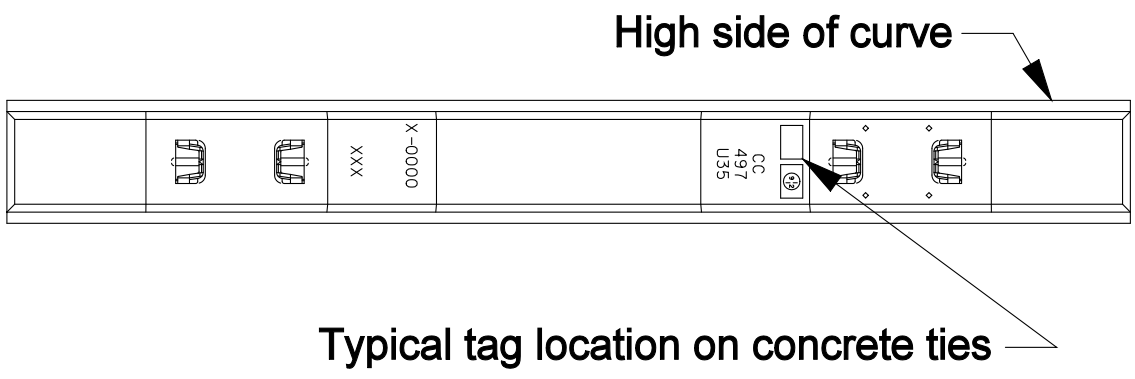

Figure 2-AA

NOTE: LEVEL (LVL) indicates where superelevation begins and FULL indicates where full superelevation is attained.

3. Mark superelevation changes on the high rail through spirals in 1/4-inch increments.
4. Transfer curve information from the old rail to the new rail when the rail is replaced. When ties with curve markers are replaced, transfer curve markers to the new ties.

2.6.9 Restoring Surface

Follow these requirements when restoring surface:

1. Make sure there is enough ballast to restore the ballast section after completing the raise.
2. Restore a “0” crosslevel to tangents and restore designated superelevation in curves when surfacing track.
3. Sight along the ball of the rail to determine surface irregularities.
4. When performing spot surfacing by hand:
   - Correct the designated grade rail in curves before re-establishing the designated superelevation in the high rail.
   - If necessary, raise the opposite rail to obtain the desired crosslevel or superelevation.
5. Make runoffs from track raises gradually—between 1/2 to 3/4 inch per 39 feet.
   - Start runoffs soon enough to blend into the top-of-rail elevation of fixed objects such as open deck bridges, crossing frogs, or other immovable objects.
   - Do not make permanent runoffs in curves or switches.

6. When surfacing switches, do not allow train traffic through the turnout side until it has been tamped.

   Tamp both sides of ties for a distance of 15 inches from each side of the rail base. To prevent center-bound track, avoid tamping wood and concrete tie centers.

7. When out-of-face tamping with automatic tamping machines:
   - Follow manufactures recommended squeeze pressure.
   - Make at least two insertions per cross tie and three insertions per switch tie. (CAT only requires one insertion.).
   - Adjust tamper tools to ensure that the top of the blade is 1/2 inch below the bottom of the tie as shown in Figure 2-BB. Table 2-W-1 shows depth of each tie type.
   - Avoid striking ties with tamper tools when making insertions.

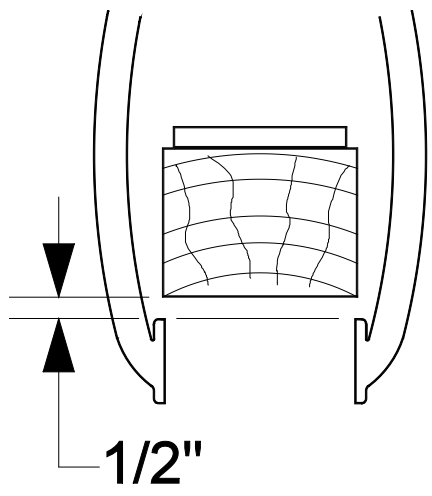

Figure 2-BB

Tie Type	Depth of Tie
Wood	7"
Composite	7"
Concrete	8 3/4"
Steel	4" to 5"

Table 2-W-1

8. When tamping crossovers that have intermixed long ties and butted ties follow these guidelines:
   a. Remove the crossover from service.
   b. From the ties that go under both main tracks remove the rail fasteners on the main track you intend to raise first and on the crossover portion.
   c. Raise the main track crossover switch as you would any turnout except do not tamp the long ties that you have unclipped.
   d. Carefully watch your alignment, as it is important not to throw the turnout beyond smooth lining.
   e. Raise the turnout on the other main track.
   f. Tamp all the long ties on this track.
   g. Carefully ensure that while raising and aligning this track that the plates on the long ties come up under the crossover and other main track.
   h. Clip up the long ties.
   i. Tamp the crossover and long ties on the other main track.
   j. Return crossover back in service.

2.6.10 Surfacing Steel Tie Installations

Steel tie installations require multiple insertions to initially place and compact ballast as follows. Following these steps is critical for long term performance of the ties:

1. Make three insertions in the rail seat area.
2. Make three insertions in the tie center area.
3. Make three or more insertions in the rail seat area to compact the ballast until it is visible at the top of the inspection holes located near the base of the rail.
4. Determine if the ballast is visible at the top of the inspection holes provided.
   - If yes, the tie is properly tamped.
   - If no, fill tie cribs with ballast and repeat steps 1 to 4.

2.6.11 Surfacing at Signal Detectors

Signal detectors are a critical component to the UPRR network. Examples of signal detectors include Hot Box, Dragging Wheel and Wheel Impact Load Detectors. When surfacing operations are performed in the area of detectors the surfacing operation should continue through the detector area whenever possible. Surfacing operations should take extreme care to avoid surfacing up to a detector, skipping the detector and surfacing on the other side as this may create a area of high stress that can damage detectors.

Prior to surfacing or any maintenance activity through a detector location or AEI Site the signal department should be notified a minimum of 24 hours in advance whenever possible. Signal department personnel can assist with removing and adjusting of wires and other damageable equipment. When surfacing through certain detectors it may be required that tamping equipment be placed into switch tamping mode and slow down. Job briefings are critical between the groundman, machine operator and signal personnel to make sure that equipment will not be damaged.

Wheel Impact Load Detectors (WILD) – These special types of detectors utilize strain gauges to pick up wheel impacts. They are intended to find flat or damaged wheels. Due to the configuration of these detectors it is critical that they are surfaced during normal surfacing operations and a minimum of **ONCE ANNUALLY.** Proper surfacing will allow these detectors to operate properly.

2.6.12 Track Shims and Planks

Install track shims and/or planks in wood tie track with frozen ballast conditions to restore surface and cross level irregularities. Shims /planks should be used as the last viable option to correct irregularities and removed when possible. Use shims/planks as follows:

1. Place shims that are at least the same size as tie plates on top of wood ties with level surfaces. Place shims directly under the tie plate.
2. Use the minimum number of shims that will add up to the desired thickness required.
3. Fasten shims and/or planks to ties using spikes that penetrate the wood tie at least 4 inches.
4. When necessary to shim track over 1 inch:
   - Do not allow train speed to exceed 30 MPH.
   - Remove rail anchors from shimmed ties and brace the rail on both sides with tie plates on every third tie for the full length of the shimmed track.
   - Fill all holes in tie plates when spiking rail back down to wood ties as shown in Figure 2-CC.

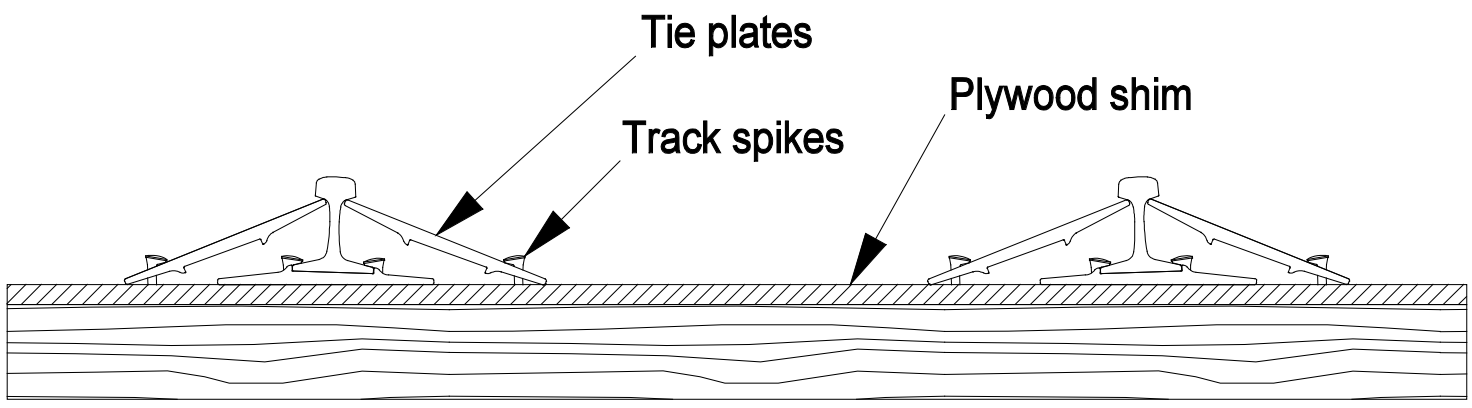

Figure 2-CC

5. When necessary to shim wood tie track over 2 inches:
   - Use a 2-inch plank in combination with shims placed on top of the plank. The plank must be at least 3 feet long, as wide as the tie plate, and spiked flush with the end of the tie.
   - Drill 5/8-inch holes through the plank at all locations where spikes will penetrate the plank.
6. In track with wood ties, when track shims and/or planks are placed to correct surface irregularities in frozen ballast:
   - Remove the track shims and/or planks and surface the track immediately after thawing occurs.
   - Replace rail anchors removed during the shimming procedure.

2.7 Vehicle Track Interaction (VTI)

Vehicle Track Interaction (VTI) is a technology that evaluates how the vehicle interacts with the track. The tool is used to: detect vehicle and track interaction deviations, provide a proactive approach to reducing damage to vehicles and track, improve the track inspection process, quantify and prioritize the exceptions, prevent costly service and equipment failures, and provide quality assurance through evaluation of maintenance quality and results.

VTI is a real time system that continuously evaluates the track for exceptions. When exceptions are found they are labeled with milepost, GPS coordinates, speed, date and time.

Current FRA measurements are based on static measurements and do not take into account how the moving vehicle interacts with the track. The VTI exceptions are more of a performance based exception. An example of this would be a derailment where the track measurements are within the FRA thresholds and the cars measurements do not exceed acceptable levels.

Note: Not all VTI exceptions will correlate to FRA exceptions.

2.7.1 Hardware Used for VTI System

The system is mounted primarily on locomotives and some rail cars. The main components of the on board VTI system are: accelerometers, a central processor, communication system,

and DGPS for location information. The system uses accelerometers for sensors to measure accelerations. There is one accelerometer that is mounted above the suspension in the center pivot point of the front truck that measures carbody laterals and carbody verticals. There is one accelerometer that is mounted on the truck that measures truck laterals. There are two accelerometers that measure axle verticals that are mounted on both sides of the front axle.

The VTI unit uploads the exception through wireless communication to a central server. When an exception is found and processed, the information that is being furnished is real time. The exception to this is when the unit is out of cellular range. The system will keep trying to send the exception, until it is successful.

Once the exception data is processed at the central server it is sent to U. P. Engineering Systems, where the information is processed internally.

2.7.2 VTI Thresholds

VTI Thresholds have been established to prioritize the exceptions. Thresholds have been set for carbody vertical accelerations, carbody lateral accelerations, truck lateral accelerations, axle vertical force, carbody roll, 10' Mid Chord Offset and Combo Clusters. The seven exceptions have two priority levels: High and Medium. Table 2-W-2 contains these exceptions.

VTI Exceptions and Thresholds 1-19-15				
Class	Speed	Exception	High Priority	Medium Priority
		CB Vertical	> 1.25 G	>1.1 G < 1.25 G
		CB Lateral	> .8 G	> .71 G < .8 G
		Truck Lateral	>.45 G	> .41 G < .45 G
		Axle Vertical	> 140 kips	> 120 kips < 140 kips
		CBR	> 3. Deg	> 2.5 Deg < 3. Deg
		CCL (Cluster)	>.18	No Threshold
Wood Tie Track MCO Thresholds				
			"High" Threshold (inches)	"Medium" Threshold (inches)
Class 1	0 - 10 mph		No MCO below 10 mph.	No MCO below 10 mph.
Class 2	11 - 25 mph	MCO	> 2.75"	> 2.20" < 2.75"
Class 3	26 - 40 mph	MCO	> 2.25"	> 1.80" < 2.25"
Class 4	41 - 60 mph	MCO	> 2.00"	> 1.60" < 2.00"
Class 5	61+ mph	MCO	> 1.25 "	> 1.00" < 1.25"
Concrete Tie Track MCO Thresholds				
			"High" Threshold (inches)	"Medium" Threshold (inches)
Class 1	0 - 10 mph		No MCO below 10 mph.	No MCO below 10 mph.
Class 2	11 - 25 mph	MCO	> 1.10"	> 0.90" < 1.10"
Class 3	26 - 40 mph	MCO	> 0.90"	> 0.65" < 0.90"
Class 4	41 - 60 mph	MCO	> 0.65"	> 0.50" < 0.65"
Class 5	61+ mph	MCO	> 0.65"	> 0.50" < 0.65"

Table 2-W-2

Axle verticals are being measured as a force. Kips are being used for this measurement. 1 kip is equal to 1000 lbs.

Carbody vertical, carbody lateral and truck lateral exceptions are measured as accelerations. The units of measures for acceleration are G's. The value of G is a constant measured as 32.2 ft/s2. The acceleration that the VTI measures is above the normal conditions.

Carbody Verticals (CB Vertical)

Carbody vertical spots are profiles spots. This is when the car or locomotive goes up and down. Most carbody verticals are very apparent, but some are more difficult to see. If the spot is difficult to see, watch a train across the track.

Multiple carbody vertical spots can set up the condition for buckling cars.

Some of the locations where carbody vertical exceptions are found are in road crossings, bridge approaches and mud spots.

Carbody Laterals (CB Lateral)

This is when the car or locomotive rock from side to side. These are very rare on the locomotives, so when you have an exception like this you need to take a look at it. Generally cross level or twist cause this exception.

Truck Lateral

Truck lateral exceptions are rare on locomotives, but an alignment spot or problem with the locomotive truck can cause this exception.

Axle Vertical

An axle vertical exception is measured when the wheel hits a spot in the rail. These are measured impacts, which can be used to eliminate potential service failures or prioritize the maintenance. The gap size or deflection will drive the level of the force. Speed also has an impact on the level of the force.

Some of the conditions that generate axle verticals are rail diamonds, mismatched joints, crushed heads, joints with cracked angle bars, broken rails, frogs, broken bolts in frogs and wheel flanges hitting the top of the angle bar. Rail diamonds generate higher forces: the wider the gap, the higher the force generated.

Crushed heads generate some of the higher exceptions. Axle Vertical exceptions should be used to prioritize the removal of crushed head rails.

Frogs generate axle vertical exceptions. As the condition of a frog deteriorates, the exception will grow. Typically, RBM frogs produce twice the level of exceptions as spring rail frogs.

A wheel flange hitting the top of the angle bar generates higher axle vertical exceptions.

Carbody Roll (CBR)

A Carbody roll angle peak to peak exception is measured over 1 sec and used to provide early warning of rock off hazards. The CBR is only measured on the two VTI coal cars.

10’ Mid Chord Offset

The axle vertical accelerations are being used to derive space curves and calculate 10’ Mid Chord exceptions. The 10’ Mid Chord Offset (MCO) was implemented to find short chord length locations not otherwise found using a 62’ or a 31’ chord. These short chord locations identified with one of the following conditions can cause rail and joint failures.

Missing spikes, missing plate/severe cutting, cracked joint bars, switch support, mud holes, crowned welds, bridge transitions, crossing transitions, bad tie and bad tie clusters. MCN1 and 2 = Mid Chord Negative and, MCP1 and 2 = Mid Chord Positive.

Combo Cluster (CCL)

A Combo Cluster is a combination of axle, carbody and/or MCO exceptions. The exceptions used in the algorithm to identify localized clusters can be made up of High, Medium or Low threshold values. A High is a combination of new and high growth exceptions and a Medium is a combination of those exceptions that continue to get worse over time.

2.7.3 Handling of VTI Exceptions

High Priority exceptions are routed to Maintenance of Way Operations Control (MWOC), the Manager Track Maintenance and Track Inspector.

- Electronic messages will be sent to Manager Track Maintenance & Track Inspector office telephones and cell telephones.
- High Priority exception needs inspected within 24 hours.

NOTE: Updates to the contact list and telephone numbers should be administered through the Track Maintenance Planner (TMP).

Medium Priority will go to the track maintenance planner.

- Medium Priority exceptions require inspection within 7 days.

2.8 Performance Based Track Geometry (PBTG)

Performance-based Track Geometry (PBTG) is a technology for track evaluation. It is a technology that has been added to the track evaluations cars. This technology uses the real time track geometry data and models rail cars across the track, which relates the track geometry to vehicle performance.

PBTG currently defines vehicle performance in terms of derailment potential. It identifies locations where the interaction of the vehicle and the track geometry are likely to produce a flange climb or wheel lift derailment. The vehicle/track combination, under the right conditions can produce an undesirable response. These are evident in the one wheel type derailments, where the track and car measurements are within standard.

PBTG is intended to help prioritize track geometry maintenance by: reducing track geometry caused derailment incidents and reducing vehicle/track dynamics related performance issues. The PBTG technology is integrated into the track evaluation car and generates PBTG exceptions on the cars exception report.

For locations that have been identified with PBTG exceptions, the technology generates recommended track maintenance actions that can be taken to eliminate the condition. This tool can be used to help prioritize these track geometry related maintenance conditions.

2.8.1 PBTG System

The PBTG is operating on a real-time basis on the track evaluation car. It receives track geometry data and freight speed from the track geometry operating system. The application processes the data and analyzes the results. The system outputs the dynamic wheel/rail forces, vehicle response exception and recommended maintenance actions.

2.8.2 PBTG Exception Criteria

PBTG exceptions have been established to identify and prioritize the poor performance locations. By determining the maximum lateral to vertical wheel load ratio and maximum lateral wheel load exception criteria, flange climb derailments can be prevented. Understanding the minimum vertical wheel load, wheel lift derailments can be prevented. The criteria that is being used for PBTG vehicle exceptions are:

- L/V Max (Lateral to vertical wheel load ratio) > 1.0.
- V Min (Vertical wheel load) < 10% of static (kip).
- L Max (Lateral wheel load) > static weight (kip).

2.8.3 Track Evaluation Car PBTG Exception Report

The PBTG exceptions have been integrated into the track geometry exceptions reports on the cars. The exception report will be provided on the track evaluation car.

2.8.4 Track Evaluation Car PBTG Recommended Action Report

The PBTG recommended maintenance actions have also been integrated into the track geometry exceptions reports on the cars. This report is provided for use in identifying maintenance actions to eliminate PBTG exceptions. The maintenance report identifies the parameter or parameters that require maintenance and must be inspected within 7 days.

3.0 TIES AND FASTENINGS

3.1 Ties 3-3

3.1.1 Types and Applications 3-3
A. Wood Ties 3-3
B. Concrete Ties 3-3
C. Steel Ties 3-3
D. Composite Ties 3-4
E. Borate Ties 3-4

3.1.2 Installation and Spacing 3-4

3.1.3 Switch Ties 3-6
A. Installing Switch Ties at Turnouts 3-6
B. Installing Switch Ties at New Turnout Locations 3-7
C. Installing Switch Ties in Crossover Switches 3-7

3.1.4 Head Block and Switch Machine Ties 3-7

3.1.5 Transition Zones 3-8

3.1.6 Tie Drilling 3-9

3.1.7 Defective Wood or Composite Ties 3-10

3.1.8 Non-Defective Tie Distribution 3-10

3.1.9 Joint Tie Support 3-10
A. Class 1 and 2 Tracks 3-10
B. Class 3, 4, 5 and 6 Tracks 3-11

3.1.10 Program Maintenance for Wood Ties 3-11

3.1.11 Defective Concrete Ties 3-12

3.1.12 Minimum Number of Non-Defective Concrete Ties 3-13

3.1.13 Maximum Number of Consecutive Non-Supportive Concrete Ties 3-14

3.1.14 UPRR Concrete Tie Rating Scale 3-15

3.2 Concrete Tie Maintenance 3-15

3.2.1 Rail Seat Abrasion 3-16

3.2.2 Concrete Tie Pads 3-18

3.2.3 Concrete Tie Abrasion Repairs 3-18

3.2.4 Concrete Tie Insulators 3-19

3.2.5 Concrete Tie Spring Rail Clips 3-20

3.2.6 Concrete Tie Shoulder Replacement 3-20

3.2.7 Concrete Switch Tie Lag Inspection 3-21

3.2.8 Concrete Switch Tie Lag Repair 3-21

3.2.9 Damaged Concrete Tie Temporary Shoulder Repair 3-24

3.2.10 Insulated Joints in Concrete Tie Track 3-24

3.3 Elastic Fasteners 3-24

3.3.1 Spring Clips 3-24

3.3.2 Safelok I Clips 3-26

3.3.3 Safelok III Clips 3-27

3.3.4 E-Clips 3-27

3.3.5 Vossloh Fastening System 3-28
A. Vossloh Fastening System Parts 3-27
B. Fastener Installation 3-28
C. Broken Lag Removal 3-29
D. Insert Replacement 3-30
E. Vossloh Joint Fastenings 3-30
F. Rail Relay on Ties with the Vossloh Fastening System 3-31

3.3.6 Insulated Joint Fastenings 3-31

3.3.7 Weld-On Shoulders 3-31
A. Installing Non-Insulated Weld-on Shoulders 3-31
B. Installing Insulated Weld-on Shoulders 3-31
C. Replacing Weld-on Shoulders 3-31
D. Welding Weld-on Shoulders 3-31
E. Installing Weld-on Shoulders in Various Applications 3-31

3.3.8 Hook-In Shoulders 3-32

3.4 Tie Plates 3-32

3.4.1 Double Shoulder Tie Plates 3-32

3.4.2 Tie Plate Requirements 3-33

3.4.3 Curve Blocks 3-33

3.4.4 Elastic Fastener Plates 3-34

3.5 Spikes and Screws 3-35
3.5.1 Spikes 3-35
3.5.2 Joint Spikes 3-35
3.5.3 Spike Pattern 3-36
A. Spiking Turnouts 3-37
B. Spiking Road Crossings 3-37
3.5.4 Lag Screws 3-38
3.5.5 Evergrip Lag Screw 3-38
3.6 Tie Maintenance 3-39
3.6.1 Wood Tie Identification 3-39

3.0 TIES AND FASTENINGS

3.1 Ties

A tie is a support to which rails are fastened and held to gage. Ties are designed to distribute wheel loads to the roadbed and to interlock with ballast to prevent lateral, longitudinal and vertical movement of the track structure.

3.1.1 Types and Applications

Determine the tie requirements for various track applications according to subsections A. Wood Ties, B. Concrete Ties, C. Steel Ties, D. Composite and E. Borate Ties.

A. Wood Ties

Follow these requirements when using wood ties:

1. Install wood ties of the designated length and size as determined by annual traffic density on the main track. Use Table 3-A to determine tie length and size.

Wood Tie Types and Applications			
Track Type	**ML Traffic Density**	**Tie Size**	**Tie Length**
Main	Greater than 10 MGT	7” x 9”	8’6”
Main	Less than 10 MGT	7" x 9"	8 feet or 8' 6"
Sidings	50 MGT or more	7" x 9"	8’6”
Sidings	Less than 50 MGT	7" x 9"	8 feet or 8' 6"
Industry and Yards	All locations	6" x 8" or 7" x 9"	8 feet or 8' 6"

Table 3-A

Note: For assistance with Tie Type Designation See UPRR System Tie Map: MyUP > Reference > Bulletin Board > Maps > Tie Usage Map. Also, Capital Project Management page under the Project Ident tab.

DO NOT INTERMIX WOOD TIES WITH CONCRETE TIES TO MAKE PERMANENT REPAIRS.

2. Install 10 foot wood ties and concrete crossing panels for 10 foot ties if the daily traffic count exceeds 1500 vehicles/day.
3. Install 9 foot wood ties and concrete crossing panels for 9 foot ties if the daily traffic count is 500-1500 vehicles/day.
4. Install 9 foot wood ties and wood prefab crossing panels if the daily traffic count is less than 500 vehicles/day.
   a. For daily traffic count use: http://home.www.uprr.com/emp/engineering/apps/efms/afi_reports/facility_reports.cfm > Road Crossings
5. Reconditioned and industrial grade ties may be utilized on Industrial Leads and Yard Tracks as approved by the Chief Engineer. Capital wood tie projects may utilize reconditioned and industrial grade ties if intermixed with new wood ties but not to exceed 50% reconditioned and industrial grade ties.

B. Concrete Ties

Follow these requirements when installing ties in concrete tie track:

1. Clean and drain the ballast section.
2. Ensure that the ballast section has a minimum depth of 12 inches below the bottom of the tie and a minimum shoulder width of 12 inches.
3. Install concrete guard rail ties in concrete tie track where guard rail installation is required as outlined in Standard Drawing Nos. 4000 through 4016.

   NOTE: Use only the coach screws and washers in Standard Drawing No. 0420 to lag steel plates to ties specified in Standard Drawing No. 0202.

4. Install 10 foot concrete ties and concrete crossing panels for 10 foot ties if the daily traffic count exceeds 200 vehicles/day.
5. Install 8-6 foot concrete ties and concrete crossing panels for 8-6 foot ties if the daily traffic count is less than 200 vehicles/day.

C. Steel Ties

Follow these requirements when using steel ties:

1. Do not use steel ties on any mainline track.
2. In yard tracks, steel ties should be used in place of gage rods to provide additional gage restraint.
3. Install steel ties at locations in which corrosive materials may be present (i.e. locomotive facilities, rip tracks).
4. Install steel turnout ties according to Standard Drawing No. 0243 for additional gage

restraint in other than main track turnouts.

5. When tamping steel ties use the inspection hole to determine that the inside of the tie is full of ballast showing that the tie is fully tamped.
6. When installing used steel ties make thorough inspection of hook-in shoulder holes looking for elongation or cracks.

Steel tie installations require multiple insertions to initially place and compact ballast as follows:

1. Make three insertions in the rail seat area.
2. Make three insertions in the tie center area.
3. Make three or more insertions in the rail seat area to compact the ballast until it is visible at the top of the inspection holes located near the base of the rail.
4. Determine if the ballast is visible at the top of the inspection holes provided.
   - *If yes, the tie is properly tamped.*
   - *If no, fill tie cribs with ballast and repeat steps 1 to 4.*

D. Composite Ties

Composite ties are utilized in specialty applications only as approved by the Chief Engineer.

1. Composite ties may be used in the following areas where wood tie life is shortened due to environmental conditions.
   - High decay areas (Louisiana, Arkansas and East Texas: See map located at: Engineering>Engineering Bulletin Board>Maps)
   - Soda ash territory
2. Do not use composite ties in any road crossings or any location where inside guard rails are required.
3. Composite ties can be handled and installed with wood tie equipment. Tie Bed Scarifiers equipped with digger head extensions must be used to scarify the tie bed to a depth that will allow approximately 1” clearance between top of newly installed tie and bottom of rail base. This will prevent unnecessary bending of the composite tie during insertion.
4. Composite ties do not require predrilling for cut spike installations but predrilling is required for lag screw installations.
5. Composite ties can be recycled and should not be placed in a landfill or incinerated.
6. Composite tie spiking standards are shown below. When using 8 hole plates, do not use a spike in the hold down holes.
7. Due to material properties of composite ties, they are able to retain initial holding power more effectively than wood ties. Because of the material properties the use of plugging compound is not necessary when re-spiking composite ties. If composite ties need to be re-gaged the only option is to replace the composite tie.

On tangent track and curves up to 1 degree use 2 gage spikes and 1 field spike.

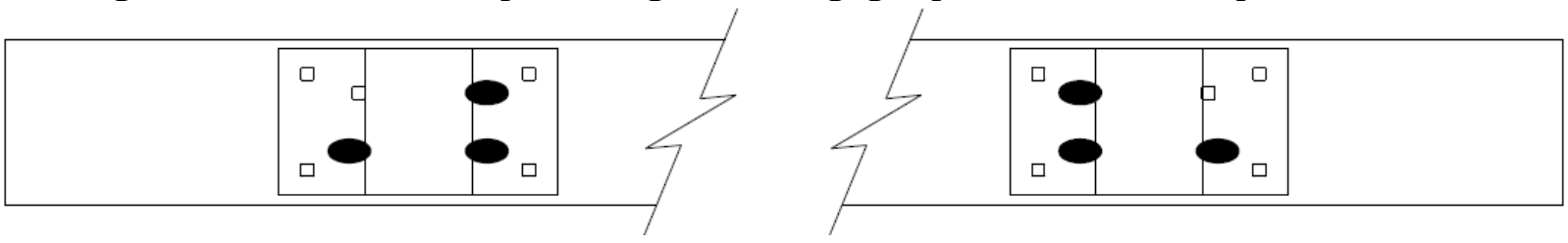

On all curves of 1 degree and over, use 2 gage and 2 field rail spikes.

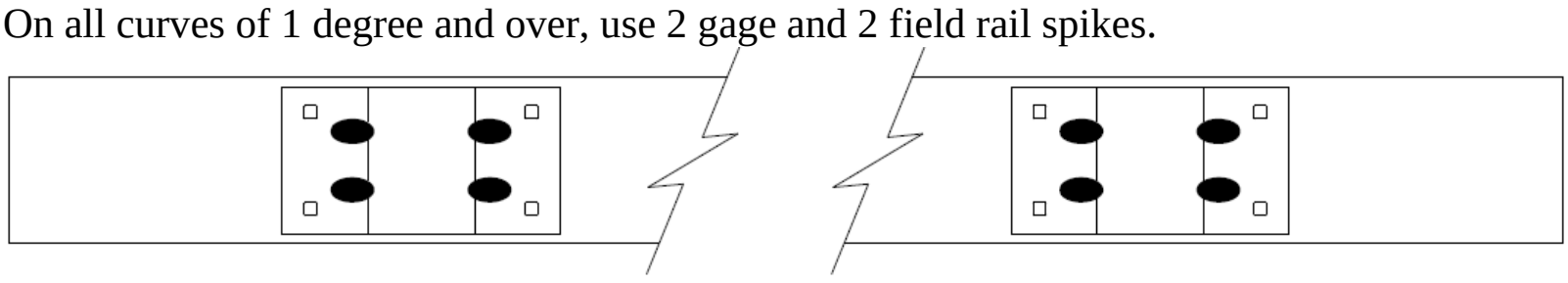

Figure 3-A

On all 6 hole plates, use spiking patterns as shown in 3.5.3 Spike Pattern.

E. Borate Ties

Borate acts as a preservative enhancer for our creosote treated wood ties.

Follow the following requirements when using Borate treated wood ties:

1. Borate ties are to be used in areas where non-treated wood tie life is shortened due to environmental conditions.
   - High decay areas (See map located at: MyUP>Reference> Bulletin Board>Maps>Tie Usage Map)

3.1.2 Installation and Spacing

Unless otherwise approved by the AVP Engineering – Track Programs or Chief Engineer Maintenance, follow these requirements when installing and spacing ties:

1. Do not replace more than three consecutive cross or switch ties at one time.
2. Do not replace more than two consecutive cross or switch ties at one time if the rail temperature is at, above, or forecasted to be above, the “Rail Temperature Required for Speed Restriction Behind Track Work” for the Subdivision.

3. Do not replace more than 50 percent of the cross or switch ties in any rail length at one time. If you must replace more than the limit of consecutive ties at one time:
   a. Ensure that all the ties installed in the first pass have been:
      - Fully spiked and anchored.
      - Refer to section 2.3.3 Measuring Gage for base gage.
      - Installed with enough ballast to maintain proper surface and alignment.
   b. Make an additional pass to install ties if required.
4. Tie replacement requirements 1 – 3 do not apply when installing ties in:
   - Road crossings.
   - Station platforms.
   - Confined track areas.
   - Sledding, plowing, or undercutting operations.
5. Install ties at a right angle to the track's running rails (except No. 20 and No. 30 concrete switch ties per Standard Drawings Nos. 7047 and 7095).
6. Mark the inner rail of curves with appropriate tie spacing.
7. Where tracks come together behind turnouts:
   - Do not interlace ties.
   - Maintain at least 3 inches between the ends of ties.
8. Install ties with "sap side" kerf marks (1/8-inch grooves cut into the top of the tie) facing up. This places the ties' harder heartwood down on the ballast as shown in Figure 3-B.

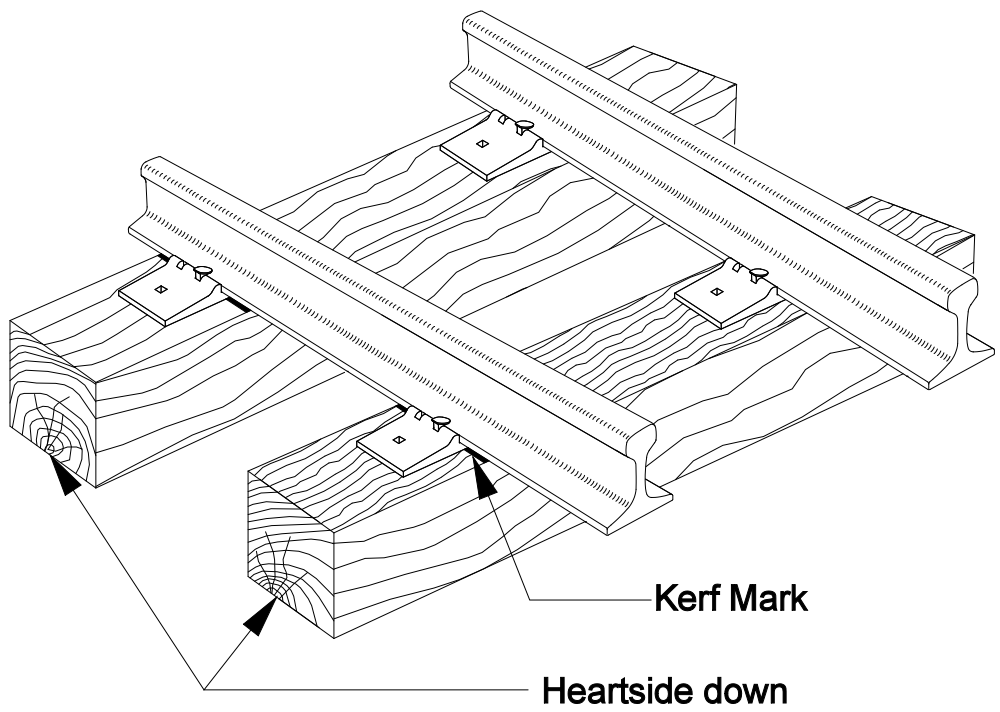

Figure 3-B

9. Align kerf mark in ties with the rail base of the designated line rail. Install non-marked wood ties with the tie ends extending from the outside rail base of the line rail as shown in Table 3-B.

Distance from Outside Rail Base to End of Wood Tie on Line Rail		
Tie Application	**Tie Length**	**Outside Line Rail Base to End of Tie Distance**
Cross Tie	8 feet	15 inches
Cross Tie	8 feet 6 inches	18 inches
Cross Tie	9 feet	21 inches
Cross Tie	10 feet	27 inches
Switch Tie	10 to 17 feet	*27 inches
Switch Tie	18 feet	*21 to 27 inches
Switch Tie in Crossover	23 to 27 feet	*21 to 27 inches with ties centered under the 2 tracks

Table 3-B

**NOTE: See Section 3.1.3 Switch Ties for additional information.*

10. When wood ties are re-spiked, plug the spike holes. Do not plug spike holes in composite ties when re-spiking.
11. When trains must operate through tie renewal areas during working hours, adhere to the minimum requirements outlined in Table 3-C.

Track Type	Maximum Number of Consecutive Ties Left Unspiked	Maximum Allowable Train Speed
Tangent	3	25
Curve	2	25

Table 3-C

12. Maintain a minimum number of ties at the designated spacing in each 39 feet of track as determined by the tie and track type. Tie spacing for 8’6” ties and 9’ ties are the same. Use Table 3-D to determine the quantities.

Tie Quantities Per 39 Feet of Track and Required Spacing		
Tie Type	**Main Track**	**Sidings and Yards**
7" x 9" Wood/ Composite	24 ties @ 19-1/2 inches	20 ties @ 24 inches
6" x 8" Wood/ Composite	Do not use	22 ties @ 21-1/4 inches
Concrete	20 ties @ 24 inches	20 ties @ 24 inches
5 ½” x 8’6” Steel	Do not use	20 ties @ 24 inches

Table 3-D

13. Install and space ties under rail joints with the centerline of the tie measuring between 9 and 18 inches from the rail end. Ensure that tie spacing will allow for field welding of joints to avoid re-spacing ties.

3.1.3 Switch Ties

The standards that apply to cross ties also apply to switch ties. Follow these general switch tie requirements:

1. Maintain a standard set of switch ties in every turnout according to the applicable Standard Drawing.
   - Do not install cross ties in turnouts in place of switch ties to make a permanent repair.
   - Do not cut switch ties to make shorter lengths.
2. When ordering replacement concrete or steel ties, specify the turnout size, hand, individual tie number, tie generation, HST present, tie spacing and frog type.

NOTE: Each concrete or steel switch tie in a turnout is unique. The ties are individually numbered for identification. Concrete turnout ties span multiple generations and tie spacings; for assistance with ordering contact Methods and Research at 402-544-5447.

A. Installing Switch Ties at Turnouts

Follow these requirements when installing switch ties:

1. Install 10-foot switch ties ahead of the switch points in main track and siding switches according to Standard Drawing No. 0220. In yard track switches, install eight 9-foot switch ties ahead of the switch points.
2. Install 10-foot switch ties under the full length of the switch points. You may use 9-foot ties in yard track switches where the track configuration does not give enough clearance between tie ends of adjacent track.
3. Ensure that wood switch ties extend 27 inches from the outside base of the designated line rail on the straight side of a switch.
4. Change switch tie lengths to the next longer tie where the amount of tie that extends from the outer rail base on the turnout side becomes less than 21 inches while maintaining the prescribed 27-inch distance on the straight side of the switch.
5. Reduce the amount of tie that extends from the base of the designated line rail on the straight side of a switch to 21 inches on the last few 18-foot switch ties. See Figure 3-C-1.
   - Do this where the amount of 18-foot tie that extends on the turnout side becomes less than 21 inches while maintaining the 27 inches on the straight side.
   - Install the remaining 18-foot ties in this manner to where at least 45 inches exist between the outside rail bases of the turnout and straight side rails.

NOTE: For new installations refer to latest turnout Standard Drawings No. 7000 to 7099.

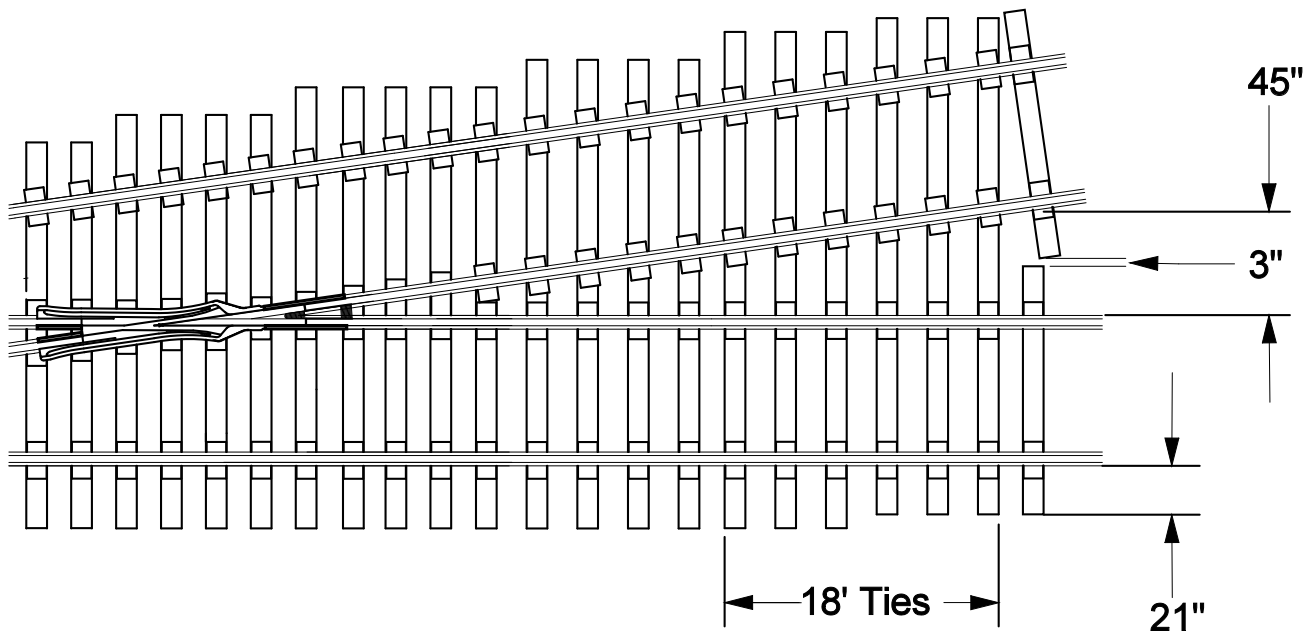

Figure 3-C-1

B. Installing Switch Ties at New Turnout Locations

Follow these requirements to install switch ties at new turnout locations in main track or sidings:

1. Before installing switch ties, unload enough ballast to:
   - Support all switch ties throughout their entire length.
   - Fill all cribs.
   - Provide enough shoulder ballast throughout the limits of the new switch location to maintain proper surface and alignment.
2. Install switch ties in at least two passes as follows:
   - Replace no more than one-half of the ties in the first pass.
   - Install no more than two ties in a row in one pass.
   - Fully spike and anchor all ties.

C. Installing Switch Ties in Crossover Switches

Follow these requirements when installing switch ties in crossover switches:

1. Measure track centers in wood tie track to determine the length of long switch ties required in crossover switches where ties extend under both tracks. See Table 3-E.

Long Switch Tie Lengths for Crossover Switches	
Existing Track Center	**Long Switch Tie Length**
13 feet to 13 feet 11 inches	23 feet
14 feet to 14 feet 11 inches	24 feet
15 feet to 15 feet 11 inches	25 feet
16 feet to 16 feet 11 inches	26 feet
17 feet to 17 feet 11 inches	27 feet
18 feet or greater	Not required

Table 3-E

NOTE: In crossover switches, long switch ties extending under both tracks replace shorter length switch ties used in standard turnouts where track centers are less than 18 feet.

2. At crossover switches where the track centers do not measure in even feet, center the long switch ties under both tracks, with 21 to 27 inches extending from the outer rail base of the designated line rails.
3. Where the first and last long switch ties are installed, make sure at least 45 inches exist between the rail base of the outside turnout rail and the rail base of the inside adjacent track.

   This distance will provide 3 inches of clearance between the tie ends of shorter length switch and cross ties installed next to the outer long switch ties as shown in Figure 3-C-2.

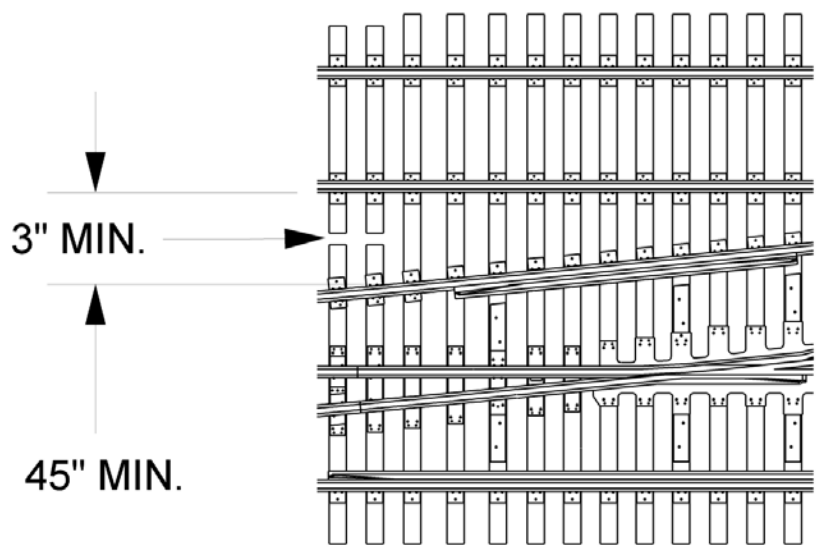

Figure 3-C-2

4. Use the Table 3-F below to determine the shorter length switch ties replaced by long switch ties in crossover switches.

Switch Ties Replaced by Long Switch Ties in Crossover Switches	
Existing Track Center	**Long Switch Ties Replace These Shorter Length Ties**
13 feet to 13 feet 11 inches	14 feet and longer
14 feet to 14 feet 11 inches	15 feet and longer
15 feet to 15 feet 11 inches	16 feet and longer
16 feet to 16 feet 11 inches	17 feet and longer
17 feet to 17 feet 11 inches	18 feet and longer
18 feet or greater	Not applicable

Table 3-F

3.1.4 Head Block and Switch Machine Ties

Follow these requirements to install head block and switch machine ties:

1. In hand-operated switches, determine the length of wood switch ties to use as head block ties by determining the length of the connecting rod. See Table 3-G.

NOTE: When using table 3-G, round the actual length of the connecting rod to the nearest foot.

Head Block Tie Length for Hand-Operated Switches	
Connecting Rod Length	**Head Block Tie Length**
3 feet	13 feet
4 feet	14 feet
5 feet	15 feet
6 feet	16 feet
7 feet	17 feet

Table 3-G

2. Install dapped/tapered switch machine ties in power-operated switches where there are dapped gage plates.
   - Make sure helper rod assemblies on switches mount to specific length switch ties to provide adequate clearance for automatic tamping machines to surface through the switch point area.
   - Use Table 3-H to determine the proper combination of switch tie lengths.

Dapped/Tapered Switch Machine Tie Lengths			
Turnout Size	**Helper Rod Design**	**Switch Machine Tie Length**	**Supporting Switch Tie Length**
7 to 15	Not applicable	14 feet 6 inches	Not applicable
20	Single	14 feet 6 inches	11 feet
20	Double	15 feet 6 inches	12 feet

Table 3-H

3. Use the diagram in Figure 3-D to determine the installation location for helper rod supporting switch ties.

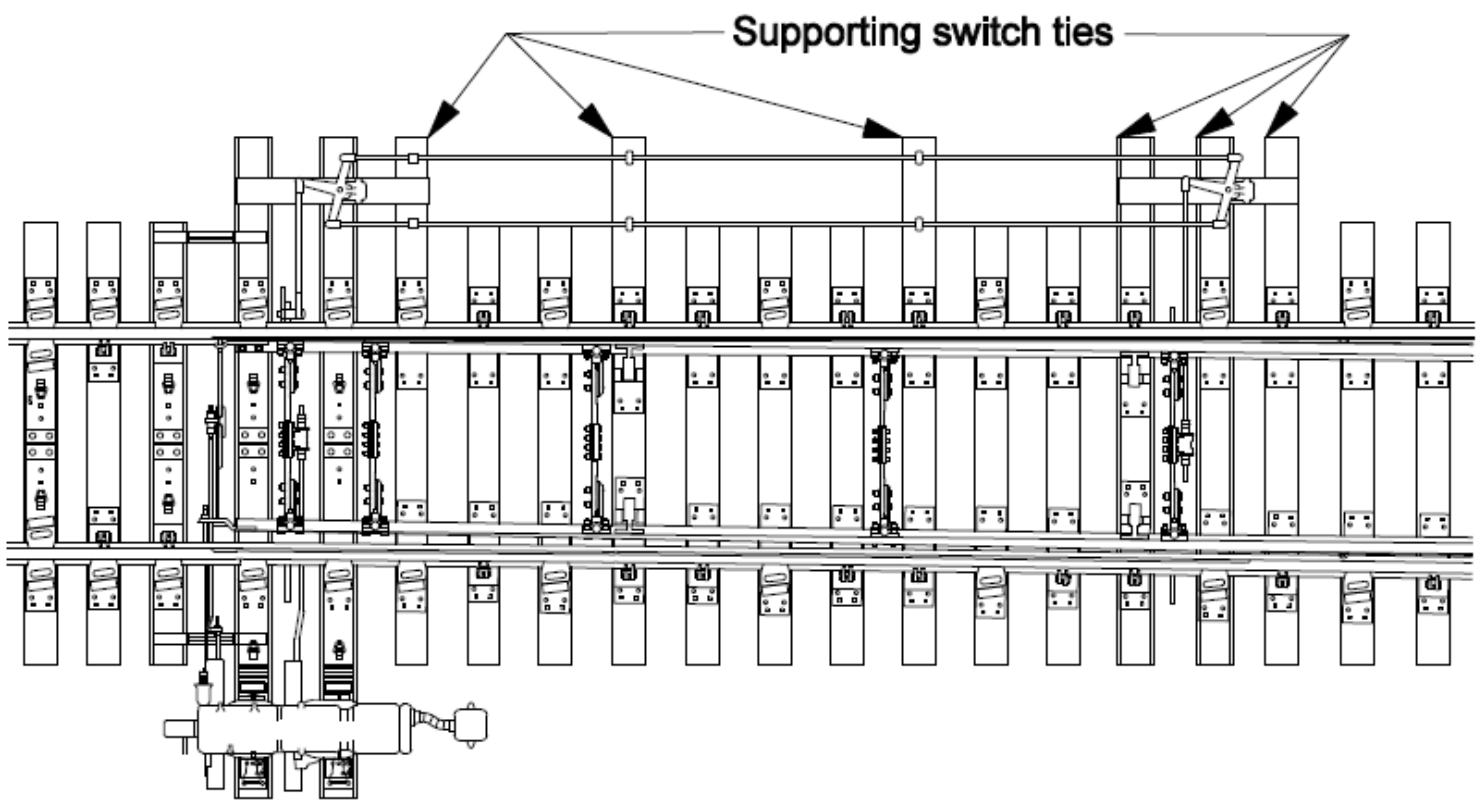

Figure 3-D

3.1.5 Transition Zones

Follow the requirements in Standard Drawing 0220 for transition zones:

1. Install wood ties of specific lengths with elastic fasteners to transition to wood turnouts as shown in Table 3-I.

Elastically Fastened Wood Tie Requirements for Turnout Transitions		
When transitioning from...	**And maximum train speed is...**	**Then install...**
Wood Ties to Turnouts	More than 40 MPH on Mainline Side	24, 10-foot ties ahead of the switch points and 24, 9-foot ties behind the last long switch tie on the mainline side
Wood Ties to Turnouts	More than 40 MPH on Mainline Side and More than 35 MPH on Turnout Side Track	24, 10-foot ties ahead of the switch points and 24, 9-foot ties behind the last long switch tie on both mainline and turnout sides

Table 3-I

2. Install transition zone ties on the approaches of open deck bridges as show in Table 3-J.

Open Deck Bridge	
Wood Ties	10 ea. 10’ Ties
Concrete Ties	10 ea Ties with varied spacing between 17” and 24”. Per Standard Drawing 0220F.

Table 3-J

3. Install wood ties of specific lengths with elastic fasteners to provide transition from wood tie track to concrete ties in Table 3-K.

Elastically Fastened Wood Tie Requirements for Concrete Tie Transitions			
When transitioning from...	**And maximum train speed is...**	**Then install this quantity of 9-foot ties …**	**And install this quantity of 10-foot ties …**
Concrete to Wood or Composite Ties	Less than 30 MPH	10	None
Concrete to Wood or Composite Ties	30 to 50 MPH	10	10
Concrete to Wood or Composite Ties	More than 50 MPH	10	20

Table 3-K

NOTE: Install 10-foot ties next to the concrete ties when using multiple tie lengths in the transition zone.

NOTE: Composite ties are considered the same as wood ties.

4. When transitioning from concrete to wood tie track, do not install transition zones in curves or through road crossings. Instead, extend the concrete beyond these conditions.

3.1.6 Tie Drilling

Drill pilot holes as follows:

1. Drill the proper diameter pilot holes into wood ties before installing screw type fasteners. Use drill bit sizes according to the wood type in Table 3-L.

Drill Bit Size Required by Wood Type				
Fastener Size and Type	**Softwood**	**Hardwood**	**Composite**	**Azobe**
15/16- x 6 1/2-inch Coach Screw	11/16 inch	3/4 inch	3/4 inch	13/16 inch
3/4-inch Dome Head Road Crossing Screw	1/2 inch	9/16 inch	1/2 inch	11/16 inch
5/8-inch Torx Head Road Crossing Screw	*Not required	*Not required	Not Required	9/16 inch

Table 3-L

**NOTE: Torx head screw spikes are self-tapping.*

2. Drill ties 1/2 inch below the lowest point where the screw fastener will penetrate the tie. Ensure that pilot holes do not extend through the bottom of the ties.

3.1.7 Defective Wood or Composite Ties

Ties are defective if:

- Broken through or hollow.
- Split or otherwise impaired to the extent that ballast works through.
- Unable to hold spikes or other rail fasteners.
- Deteriorated to the extent that the tie plate or base of the rail can move laterally 1/2 inch (3/8 inch in Class 6 track) or more in relation to the tie.
- Plate cut more than 40% of the tie thickness.
- Cut by wheel flanges or dragging equipment, or damaged by fire or other sources to a depth of more than 2 inches within an area closer than 12 inches to the base of the rail, frog, or other load-bearing component.

3.1.8 Non-Defective Tie Distribution

Each 39-foot segment of track must have enough non-defective ties distributed to maintain alignment, surface, and gage. Determine effective distribution of non-defective ties according to the track alignment and class of track in Table 3-M.

Minimum Number of Non-Defective Ties per 39-foot Segment		
Class of Track	**Tangent Track and Curves up to 2 Degrees**	**Turnouts and Curved Track Greater Than 2 Degrees**
1	5	6
2	8	9
3	8	10
4 and 5	12	14
6	14	16

Table 3-M

3.1.9 Joint Tie Support

A minimum number of non-defective ties must support each rail joint. Their centerlines must be within prescribed distances from the centerline of the rail joint for the class of track as shown in Table 3-N.

Non-Defective Tie Placement to Support Rail Joints		
Class of Track	**Centerline of 1 Non-Defective Tie Must Exist Within...**	**OR Centerlines of 2 Non-Defective Ties Must Exist With 1 on Each Side of a Rail Joint Between...**
1 and 2	24 inches of the rail joint center line	Not applicable
3 to 6	18 inches of the rail joint center line	18 and 24 inches of the rail joint center line

Table 3-N

Refer to Figures 3-F through 3-H for specific details concerning locations of these non-defective ties.

A. Class 1 and 2 Tracks

Class 1 and 2 tracks must have one non-defective tie whose centerline is within the 48-inch measurement as shown in Figure 3-E-1.

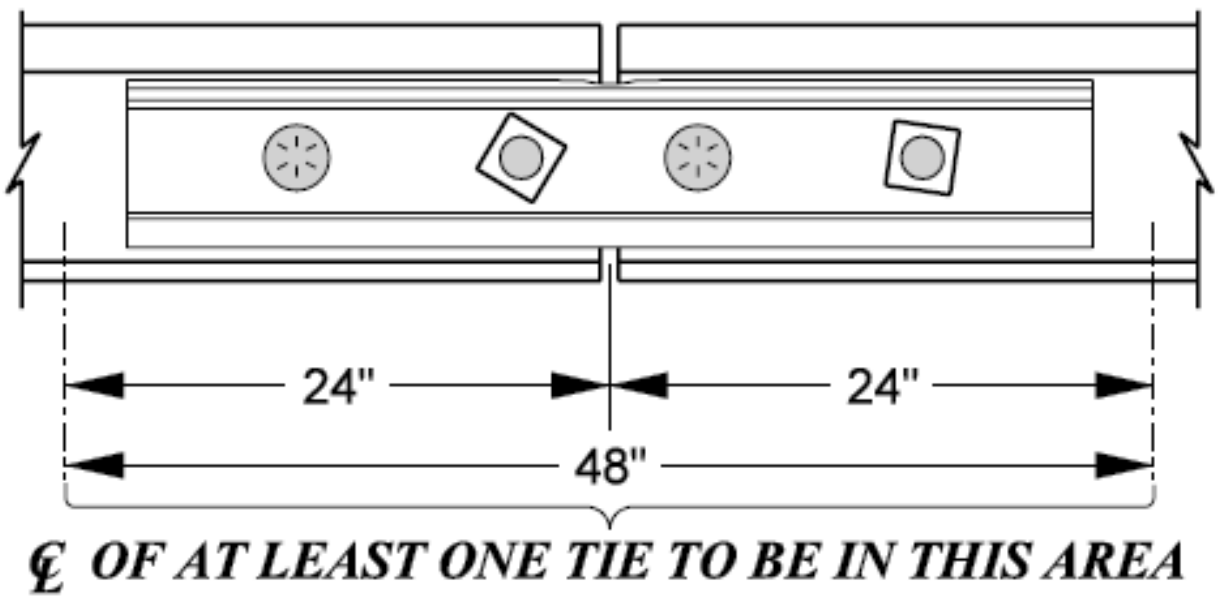

Figure 3-E-1

B. Class 3, 4, 5 and 6 Tracks

Class 3, 4, 5 and 6 tracks must have one of the following:

1. One non-defective tie whose centerline is within the 36-inch measurement as shown in Figure 3-E-2.

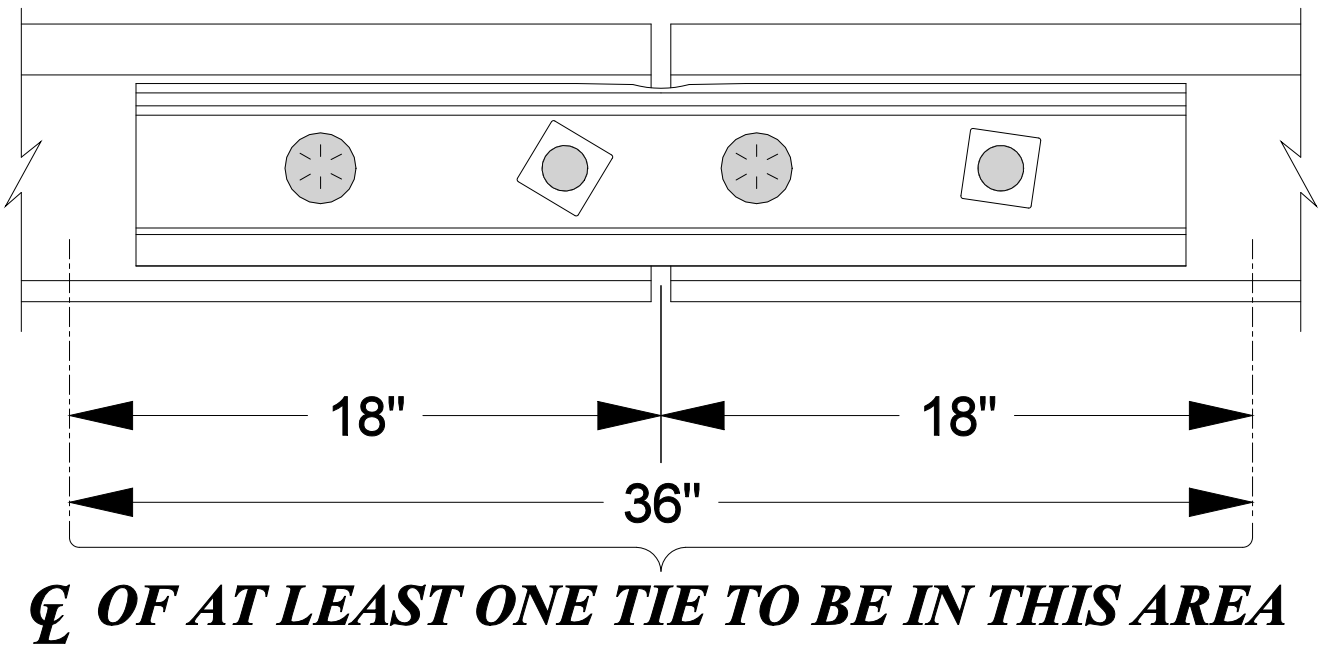

Figure 3-E-2

OR

2. Two non-defective ties, one on each side of the joint, whose centerlines are within 24 inches of the rail joint shown in Figure 3-E-3.

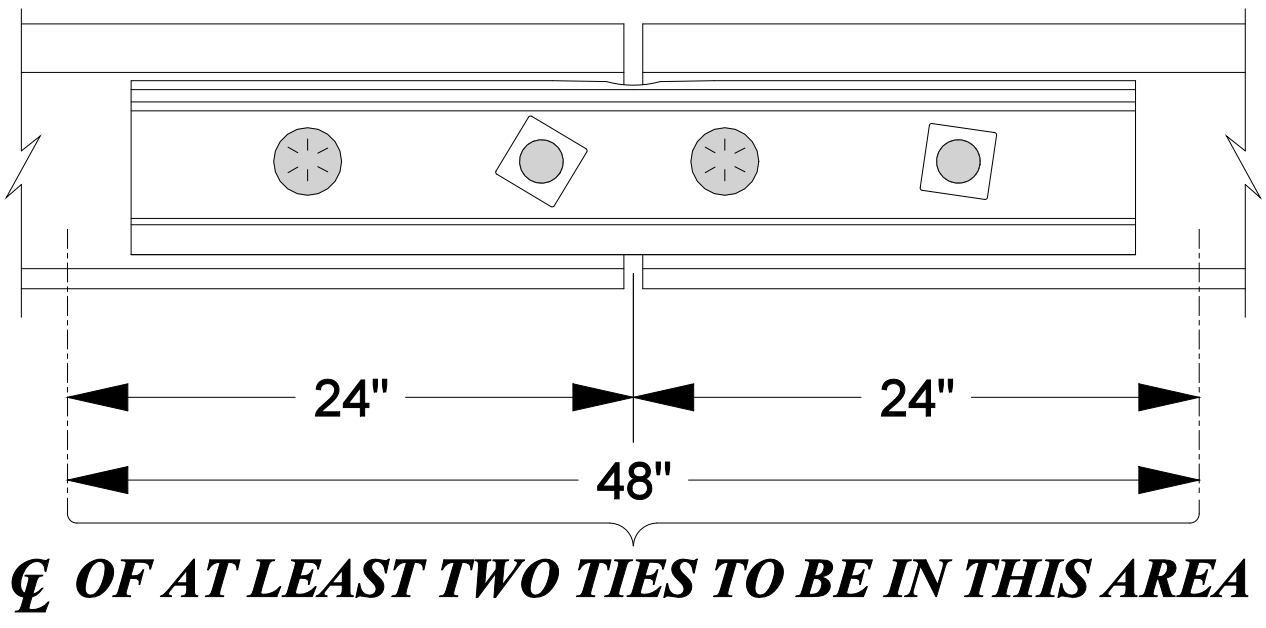

Figure 3-E-3

3.1.10 Program Maintenance for Wood Ties

Follow these tie program maintenance requirements:

1. Track Assessment tie raters will mark defective switch ties for replacement by system tie gangs.
   - Mark switch ties by placing paint marks on the field side of the rail on the straight rail of the switch.
   - Mark tie lengths on the field-side web of the same rail for identification purposes.
2. Track Assessment tie raters will rate each individual cross tie per the criteria in Table 3-O.
   - Program logic (tonnage, speed, curvature, routes etc.) along with individual tie ratings will determine future tie programs.
   - The individual cross tie ratings will be depicted in charts called bingo sheets, which number and rate each tie.
3. Track Programs tie markers will mark defective ties on open-deck bridge approaches, across ballast deck bridges, through road crossings, and in turnouts.
   - Track Programs will also replace defective ties on open-deck bridge approaches, across ballast deck bridges, through road crossings, and in turnouts.
4. Adze wood ties during out-of-face rail relays or gauging operations that remove tie plates from ties.
5. Adze wood ties during curve relays when new or second-hand rail is laid with a different size tie plate.
6. Adze wood ties during curve relays or transpositions when gauging is required or differential plate cutting exists. Refer to Section 2.3.6 Restoring Standard Gage.
7. When replacing rail on curves with elastic fasteners on one rail and the opposite rail has already been relayed with elastic fastener plates, all gauging must be done rail base to rail base.
8. Do not use power-operated equipment to adze bridge ties on open deck bridges.

9. Do not adze ties when laying rail on track that does not show signs of plate cutting.
10. Remove the curve marker from the old tie removed and reattach it to the new tie.
11. Before returning the track to normal service:
    - Fully plate, spike and anchor wood ties.
    - Make sure all rail clips are in place.
12. Do not leave ties out of the track overnight when tracks will be returned to service.

Tie Rating:	**Terms:** • **Break**-Damage from load or impact cross wise to the grain of the wood. • **Split**-Damage from load or impact parallel with the grain of the wood. • **Deteriorated**-Crushed or breakdown in grain structure. • **Plate Cut**-Damage from load and plate movement on tie. • **Wheel Cut**-Any cut like damage from equipment moving across the grain of the wood. • **Rot or Hollow**-Void in tie area may be due to weather or insects.

Tie Rating System:

Tie Class				
Condition	**#1 Excellent**	**#2 Good**	**#3 Fair**	**#4 Bad**
Broken	No breaks.	Slight separation starting.	Fairly deep separation.	Broken through
Spilt or Otherwise Impaired	Slight weather splits but integrity not compromised	Tie holds spikes, some splits deep enough to allow water into tie. If necessary, tie can plugged and re-spiked	Will not hold spikes or rail fasteners. *Tie must be plugged and re-spiked.*	To the extent the cross tie will allow ballast to work through, or will not hold spikes or rail fasteners
Lateral Plate Movement	No plate movement	Less than 1/4 inch of combine lateral plate movement, can be repaired by foam plugging	More than 1/4 inch less then 3/4 inch, can be repaired by foam plugging	Greater then ¾ inch of lateral Plate or rail Movement
Plate Cut Straight	No plate cutting	Less than 1/2 inch in depth	Greater than 1/2 inch but less than 2 inches in depth	Greater than 2 inches in depth
Plate Cut Differential	None	Less than ¼ inch	Greater then1/4 inch and less than 3/4 inches in depth	Greater than 3/4 inch
Wheel Cut	No structural damage to tie	0 inch to 2 inches deep not broken through the tie	Greater than 2 inches deep, with in 12 inches of the tie plate, not broken through the tie	Tie Broken through or crushed tie end
Rotten or Hollow	None	None	Some amount of wood decayed or missing, can be repaired by foam plugging	Hollow under Plate area, that tamping will break tie

Table 3-O

Note: Ties under IJ's and permanent joints, using the above criteria, when a tie is rated as a No. 2 (good) or No.3 (fair), lower the rating by a factor of 1(No. 2 will be rated a No. 3 and No. 3 will be rated a No. 4).

3.1.11 Defective Concrete Ties

NOTE: INFORMATION AND REQUIREMENTS CONTAINED IN THIS SECTION ARE FRA MANDATES AND MUST NOT BE REVISED.

Concrete ties are defective if:

1. Deteriorated or broken in the vicinity of the shoulder or insert so that the fastener assembly can either pull out or move laterally more than 3/8 inch relative to the tie.
2. Deteriorated such that the base of either rail is moving laterally more than:
    - $^{3}/_{8}$ inch relative to the cross tie on curves of 2 degrees or greater.

- ½ inch relative to the cross tie on tangent track and curves less than 2 degrees.

3. Deteriorated or abraded at any point under the rail seat to a depth of ½ inch or more.
4. Deteriorated or broken in center section of the tie between rails and steel tendons are exposed.
5. Broken through or deteriorated to the extent that pre-stressing material is visible.
6. Configured with less than two fasteners on the same rail, except for where fastener placement impedes insulated joints from performing as intended, the fastener may be modified or removed provided that the crosstie supports the rail.
7. Deteriorated such that the crosstie's fastening or anchoring system is unable to maintain longitudinal rail restraint, or maintain rail hold down, or maintain gage due to insufficient fastener toe load:
   - If rail anchors are applied to concrete track, the combination of the crosstie fastening and rail anchor shall provide effective longitudinal restraint.
   - Where fastener placement impedes insulated joints from performing as intended, the fastener may be modified or removed, providing that the cross ties supports the rail.

3.1.12 Minimum Number of Non-Defective Concrete Ties

NOTE: INFORMATION AND REQUIREMENTS CONTAINED IN THIS SECTION ARE FRA MANDATES AND MUST NOT BE REVISED.

Each 39-foot segment of track must have enough non-defective concrete ties distributed to maintain alignment, surface, and gage. Determine minimum number of non-defective concrete ties according to class of track in Table 3-P-1. If the number of non-defective concrete ties per 39-foot segment of track does not meet the posted timetable track speed apply appropriate slow order (apply slow order code T-38) per Table 3-P-1 until repairs are performed.

Minimum Number of Non-Defective Concrete Ties per 39-foot Segment		
Class of Track	**Tangent Track and Curves up to 2 Degrees**	**Turnouts and Curved Track Greater Than 2 Degrees**
1	5	6
2	8	9
3		10
4 & 5	12	14
6	14	16

Table 3-P-1

When ordering replacement concrete tie(s) to remediate a tie defect(s) utilize the following instructions:

NOTE: RAIL SEAT CANT VARIES WITH CONCRETE TIE DESIGNS

1. Identify the fastening system installed on the concrete tie(s):
   a. Safelok III Clip – Refer to Standard Drawing No. 0401 for drawing of clip.
   b. Safelok I Clip – Refer to Standard Drawing No. 132000 for drawing of clip.
   c. E-Clip – Refer to Standard Drawing No. 132500 for drawing for clip.
2. Based on the fastening system installed determine which type of concrete cross tie is required:
   a. If Safelok III clip – order item number 503-1720 (clips & pads included with tie).
   b. If Safelok I clip – order item number 503-1730 (clips & pads included with tie).
   c. If e-clip – order item number 503-1730 (clips & pads included with tie).

      NOTE: Concrete cross ties with e-clips are no longer available, replacement tie to have Safelok I clips.
3. If a concrete tie(s) is deemed defective per Section 3.1.12 Defective Concrete Ties and top surface or end surface cracks are present the tie may qualify for warranty replacement.

NOTE: TOP SURFACE CRACKS(S) BETWEEN RAILS MAY NOT QUALIFY FOR WARRANTY REPLACEMENT PROGRAM.

Figure 3-F

In order to qualify for the warranty replacement program the following information must be provided to the Engineering Methods and Research Department:

a. Subdivision
b. Track Number(s)
c. Mile post range
d. Quantity of defective ties
e. Fastener type (Safelok I or Safelok III)
f. Manufacturer date

Once subject information has been received and reviewed Methods and Research personnel will order the required concrete ties for field personnel.

Figure 3-G-1

3.1.13 Maximum Number of Consecutive Non-Supportive Concrete Ties

NOTE: THE REQUIREMENT FOR MAXIMUM NUMBER OF CONSECUTIVE NON-SUPPORTIVE TIES IS A UPRR REQUIREMENT AND IS NOT CALLED OUT IN THE FRA CONCRETE TIE REGULATIONS .

For concrete tie track the maximum number of consecutive non-supportive concrete ties is seen in Table 3-P-2. These are ties that are completely missing or have the rail seat missing and do not provide vertical or lateral support to the track structure. These ties would be rated a #5.

Ties that are still holding surface and gage are not to be counted as non-supportive ties for the purpose of this slow order. Figure 3-G-2 is an example of a non-supportive tie. This tie is rated a #5.

Maximum Number of Consecutive Non-supportive Concrete Ties		
Class of Track	**Tangent Track and Curves up to 2 Degrees**	**Curved Track Greater Than 2 Degrees**
1-2	4	3
3	3	2
4-5	2	1
6	1	1

Table 3-P-2

NOTE: THIS REQUIREMENT DOES NOT TAKE THE PLACE OF STANDARD TRACK GEOMETRY AND GAGE REQUIREMENTS.

Figure 3-G-2

3.1.14 UPRR Concrete Tie Rating Scale

RATING	DESCRIPTION OF RATING CLASS
#1	Tie is solid with no visible cracking; tie has no signs of rail seat abrasion and no center binding. Tie is in excellent condition.
#2	Tie has been damaged to the point of being defective as defined by 3.1.11. Tie was damaged by UPRR equipment or a derailment and does not qualify for warranty replacement. Tie is center bound cracked in multiple locations that are easily visible.
#3	Tie has small cracking that is within 4 to 5 inches of the end of the tie. Cracking can be either on the top surface at the end or on the side of the tie following a wire row. Cracks are relatively narrow and do not spread across the surface of the tie.
#4	Tie has cracking that is easily visible. Cracking is either straight or “spider webs”. Cracks run greater than 5” from the end of the tie on either the top surface or the side. Cracks are large enough to allow water to penetrate. Tie is still holding gage or surface, may have pieces of concrete broken off.
#5	Tie is completely failed and no longer supports the rail vertically in the rail seat. Tie is not supporting gage restraint as a shoulder is fractured off. Tie is not supporting surface and is fractured in multiple locations.

3.2 Concrete Tie Maintenance

Follow these requirements to maintain concrete ties:

1. To reduce the chances of center binding concrete ties, surfacing must be performed once the track accumulates 50 MGT after the initial installation or an undercutting operation. Thereafter, concrete track must be scheduled for surfacing operations on a 100 to 200 MGT cycle.
2. Concrete ties do not perform well in track that retains water.
   - Every effort must be used to promote excellent drainage.
   - When mud spots develop, it is important to remove fouled ballast to a minimum of 12 inches below the bottom of the tie and replace with clean ballast.
   - In areas where mud or fouled ballast re-appears, inspect the location for the root cause. A potential source of the problem is poor drainage in the area. It may be necessary to dig in trench drains or lateral pipes to allow trapped water to exit the track bed. See Figure 3-H-1 for an example of trench drains.

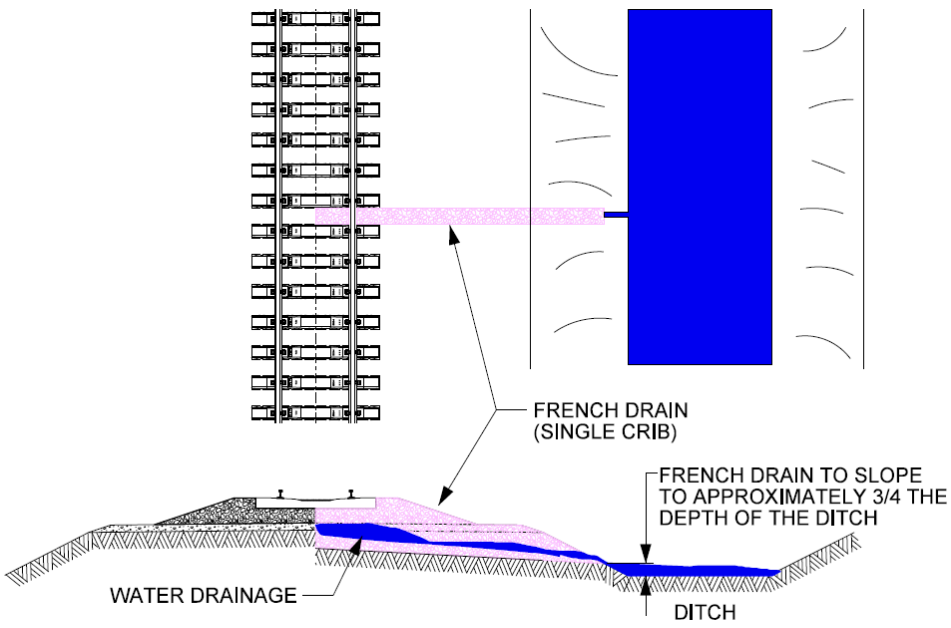

Figure 3-H-1

Refer to Chapter 1 for complete details on drainage procedures.

   - It is advisable to install trench drains or lateral pipes on both ends of road crossings and any other area that would have a tendency to hold water.
3. Concrete ties do not perform well under high impacts.
   - Eliminate all joints as soon as possible, not to exceed 90 days.
   - Preventive Gradual Maintenance Rail Grinding is required in concrete tie track.

- Eliminate high and medium level axle vertical VTI exceptions in concrete tie track.

4. Every effort should be made to replace pads that are displaying high amounts of wear in track. Black or Rubber pads do not hold up due to the heavy axle loading and should be watched for signs of wear. Some of the maintenance issues caused by the pad wear and deterioration are:
   - Reduced toe load of the elastic fasteners on the base of the rail, which allows rail movement.
   - Accelerated rail seat abrasion, generated by direct contact of the base of the rail onto the top of the concrete tie and the effect of longitudinal and lateral movement of the rail on the rail seat.
5. Controlling neutral temperature is critical in concrete tie track and to prevent longitudinal rail movement. Use Standard Drawing 0460 to determine when to install anchors on concrete ties.
   - When an anchor is to be used on a concrete tie, use the specially designed nylon isolator (Item Number 550-1653) over the anchor to prevent damage to the tie.
   - The isolator is designed to work only with the Unit 5 bar stock anchor. (Item number for anchor w/isolator 550-1652) Refer to Figure 3-H-2.

Figure 3-H-2

   - Use shaved anchors to box anchor from the switch point through the heel block. (Item number for shaved anchor 550-1880). See Section 4.17 Rail Anchors for all installation instructions.
6. To reduce center cracking of concrete ties on ballast deck structures, inspect for a minimum of 12 inches of ballast between bottom of the concrete tie and the top of the structure.
   - Add ballast to any location that does not have the minimum amount of ballast and surface track.
   - Do not install single ties with rubber bottom pads due to the change in track modulus.
7. To prevent center binding of concrete ties, ensure that a minimum of 12 inches of ballast is installed during new construction and track renewal projects.

3.2.1 Rail Seat Abrasion

1. Rail seat abrasion is the mechanical wearing of the concrete tie surface under the pad assemblies. Rail seat abrasion can be a minimum of 1/16”. Once it starts, rail seat abrasion causes rapid deterioration of the rail seat. As the concrete tie rail seat further deteriorates, the aggregate in the concrete becomes more exposed. Reasons for rail seat abrasion are:
   - Rail movement on top of pad assembly both longitudinally and laterally.
   - Moisture between the tie seat and pad assembly, can cause abrasive slurry to develop between the tie seat and the pad.
   - Deteriorated or incorrect pad assembly.
   - High lateral/vertical forces generated from train operation or super-elevation issues.
2. Inspection for rail seat abrasion on concrete ties is critical. Evidence of rail seat abrasion to inspect for include:
   - Rail cant.
   - Pads that have squeezed-out from under the rail seat, are torn on the ends, or have shown signs of bleeding on the concrete ties.
   - Longitudinal rail movement through the clips.
   - Insufficient toe loads generated from the clips.
   - Crushed or missing insulators.
3. The pad arrangement in both tangent and curved track must be at least a two part pad assembly:
   - The bottom plate must be smooth and strong. Smooth so it is not abrasive to the top of the tie and tough enough that it does not break, tear or deteriorate.
   - The top pad provides attenuation to the tie to reduce the impacts that are generated through the rail from rolling stock.
   - This pad must be able to withstand the loads and impacts generated from continuous wheel loadings and soft enough to absorb as much of this load as possible.
   - Another part of the assembly is the foam gasket. The gasket is installed directly on the tie surface. The only benefit of this gasket is to seal the concrete surface to help reduce any moisture from getting into the concrete. The use of epoxy is actually

serving this purpose and it also gives the rail seat area a harder surface than what concrete provides.

4. The following are some examples of rail seat abrasion:
   - Figure 3-H-3 shows light abrasion. The root cause of this abrasion was the incorrect pad. This is typical of tangent track rail seat abrasion. If this rail seat is covered with epoxy and all the voids are filled to the original elevation of the tie, the abrasion will be stopped.

Figure 3-H-3

   - The abrasion in Figure 3-H-4 is beyond what is expected to be repaired. This is the type of abrasion that can be found in curves. Ties with this depth of abrasion need to be replaced.

Figure 3-H-4

5. There are various ways to detect rail seat abrasion:
   a. In tangent track where the pad is deteriorating it may be possible to see that the pad is being cut by the base of the rail as in Figure 3-H-5. As you see the rail is sitting on the tie and is unacceptable.

Figure 3-H-5

   b. In curved track, review and evaluate the cant measured by geometry cars.
      - Nominal cant for a Safelok III fastener on a concrete tie is 1.42 degrees positive for a nominal rail seat cant of 1:40.
      - Nominal cant for a Safelok I fastener on a concrete tie is 1.90 degrees positive for a nominal rail seat cant of 1:30.
   c. If the cant measurement is zero degrees, the centerline of the rail is straight up and we have 1.42 degrees of rotation to the field side; which means there is at least 1/4 inch of abrasion on the field side of the rail seat.
   d. If the measured cant is a negative 1 degree there is over 3/8” abrasion on the field side of the rail seat. This negative (or reverse) cant does several things to concrete ties.
      - Negative cant of 1 degree makes the gage 5/16 inch wide.
      - The field side fastening system has lost toe load on the base of the rail. In addition, the fastening system looses at least one-half of the longitudinal strength.
      - With each movement of the passing wheel, the interaction of the rail and the tie generates additional rail seat abrasion.
      - Replacement of the field insulator will not correct any gage deviations. The base

of the rail will work up under the insulator forcing it off the shoulder.

- The base of the rail, working up and down, will wear the front face of the shoulder off. This makes the fastening system ineffective even after the rail seat has been repaired.

e. Every degree of rail rotation impacts the gage measurement by 1/8".

f. Negative cant correlates to wide gage and positive cant beyond nominal correlates to tight gage.

The following thresholds are for negative (reverse) cant on concrete ties:
Urgent limit is negative 1.50 degree
Critical limit is negative 2.0 degree

g. The other way to check for abrasion is to remove the clips, raise the rail with a track jack and remove the tie pad. At the shoulder lay a straightedge over the rail seat, it must be long enough to go beyond the shoulders. At a perpendicular angle measure the depth of abrasion from the straight edge to the tie.

6. Use the following guidelines for determining whether to repair or replace concrete ties:
   - Abrasion less than 1/2 inch should be repaired with epoxy.
   - Abrasion greater than or equal to 1/2 inch and less than 1inch requires the use of a cast plate epoxied to the tie.
   - Abrasion greater than or equal to 1 inch requires tie replacement.

3.2.2 Concrete Tie Pads

1. Concrete ties come from the tie plant with a three part pad assembly.
   - A foam gasket on top of the tie to seal the tie from moisture.
   - The middle plate (steel or nylon) to keep the surface of the tie separated from the pad, to provide protection from rail seat abrasion.
   - The pad absorbs impacts generated by dynamic rail loading from the rail to the tie.
2. After epoxy is applied to the rail seat, the foam gasket is no longer required. When replacing pads behind epoxy repairs use a two part pad assembly.

Note: Using a three part pad during epoxy repairs will prohibit future quality rail seat abrasion repairs.

3. Use new pads when performing program work on concrete ties.
   - When performing maintenance, replace defective and worn pads.

3.2.3 Concrete Tie Abrasion Repairs

1. Any time rail is changed on concrete ties with rail and curve gangs, epoxy repairs must be performed on rail seats. Special equipment is available to dispense the epoxy on the ties in a rail gang consist. Figure 3-I-1, shows epoxy being dispensed on rail seat. This must be followed up immediately with some form of leveling, such as a wide putty knife, to ensure all voids are filled and tie surface has been restored.

Figure 3-I-1

2. To achieve the desired results from the epoxy, the tanks on the machine should be preheated to between 100 degrees F and 110 degrees F prior to application.
   - Test the product prior to starting repairs.
   - Product should come out in a solid color.
   - Any streaking in the epoxy will result in an inferior product.
   - Adjustments must be made prior to placing epoxy on ties.
3. Epoxy must be allowed to firm up before placing the pad and rail.
   - If the epoxy is mixed correctly in the machine it should not take more than 20 minutes at an ambient temperature of 75 degree F for this to happen.
   - If it takes longer the machine is out of adjustment.
4. When performing small rail seat maintenance repairs, utilize the epoxy that is available in double caulking gun type tubes. Use the same hand dispenser that is used to apply the wood tie plugging compound.
5. The item numbers to be used for the epoxy products are:
   - Curve gang operations use item number 503-8880.
   - Rail Change Out (RCO) machine use item number 503-8879.

- Epoxy in a tube for maintenance use item number 503-8881.
- Dispensing hand gun use item number 410-2225.
- UV activated epoxy may be ordered by contacting Methods and Research.

6. If abrasion is greater than or equal to 1/2 inch and less than 1inch the use of a cast plate is required in order to make repairs. Figure 3-I-2, shows the cast plate that fits in the rail seat area. When using this plate you must apply a liberal amount of epoxy to fill any voids on the tie. To keep the plate from moving there must be full contact between the tie and the plate. This plate can be ordered by using item number 503-6151.

Figure 3-I-2

3.2.4 Concrete Tie Insulators

1. Insulators are used for two purposes. They insulate the shoulders from shunting the track and they function as a wear component between the rail base and shoulder. Without this wear component, the shoulder could not withstand the abrasion and lateral forces generated by the rail.
2. Proper insulator maintenance is critical in maintaining concrete tie track, especially in curves. A worn field side insulator on one rail can generate 1/4 inch wide gage. When the insulator is worn out, the rail base comes in contact with the shoulder. The rail base will then start cutting into the shoulder. Not only does this destroy the shoulder, but at the same time causes rail seat abrasion. Figure 3-J shows a heavy-duty insulator in track that has failed. If this is evident in a curve, insulator replacement is required.

Figure 3-J

3. Heavy-duty insulators have a metal plate molded into the plastic, which keeps the insulator from getting squeezed out from between the shoulder and rail. Heavy-duty insulators are required for use on the field side of both the high rail and low rail in all curves greater than or equal to 1 degree 30 minutes.
4. Wide post heavy-duty insulators are available for correcting wide gage in concrete tie track. The use of a wide post insulator on one rail will give 1/8 inch gage correction. Both rails will give 1/4 inch. When using wide post insulators it is best to use the old insulators that are worn down on the gage side of the rail or use a narrow post insulator. This allows the added thickness of the field side insulator to fit in the allotted space. Table 3-Q shows the different types of insulators available.

	Concrete Tie Insulators					
	Classification	**Field/Gage Side of Rail**	**Color**	**Post Width**	**Concrete Tie Application**	**Item Number**
Safelok 1	Standard	Gage	White/ Natural	7 MM	Use in tangent track and curves less than 1 deg. 30 min.	503-5250
	Narrow		Blue	4 MM	Use in curved track to correct wide gage. Requires installation of narrow post insulator 503-6178 on field side.	503-6246
	Heavy Duty	Field	White/ Natural	7 MM	Use in curved track greater than 1 deg. 30 min.	503-6173
			Gray	10 MM	Use in curved track to correct wide gage. Requires installation of narrow post insulator 503-6246 on gage side.	503-6178
			Bronze	8.5 MM	Use on curves greater than 8 degrees.	503-5980
Safelock III	Standard	Both	White/ Natural	7 MM	All applications	503-6162
E-Clip	Standard	Field	White/ Natural	7 MM	Use in tangents and curves less than 1 deg. 30 min.	503-6260
		Gage	Blue	4 MM	Use in curved track to correct wide gage. Requires installation of narrow post insulator 503-6462 on field side.	503-6245
	Heavy Duty	Field	White/ Natural	7 MM	Use in curved track greater than 1 deg. 30 min.	503-6250
			Gray	10 MM	Use in curved track to correct wide gage. Requires installation of narrow post insulator 503-6245 on gage side.	503-6462

Table 3-Q

5. Replace insulators when performing program work on concrete ties.

3.2.5 Concrete Tie Spring Rail Clips

Refer to Section 3.3.1 Spring Clips for guidelines on various clip designs and applications.

3.2.6 Concrete Tie Shoulder Replacement

If the shoulder, on concrete ties, fails for one reason or another; it is possible to core out the old shoulder and replace it with a new shoulder. If more than one shoulder on a cross tie or two on a switch tie needs repaired, replace the tie.

1. Replace concrete tie shoulders damaged from derailments or other causes, when they do not effectively hold the rail clip and insulator in place.
2. Replace shoulders with like-kind shoulders and do not substitute one style for another.
3. Identify the proper shoulder design for replacements from Figure 3-K-1, and then use Table 3-R for the item number.

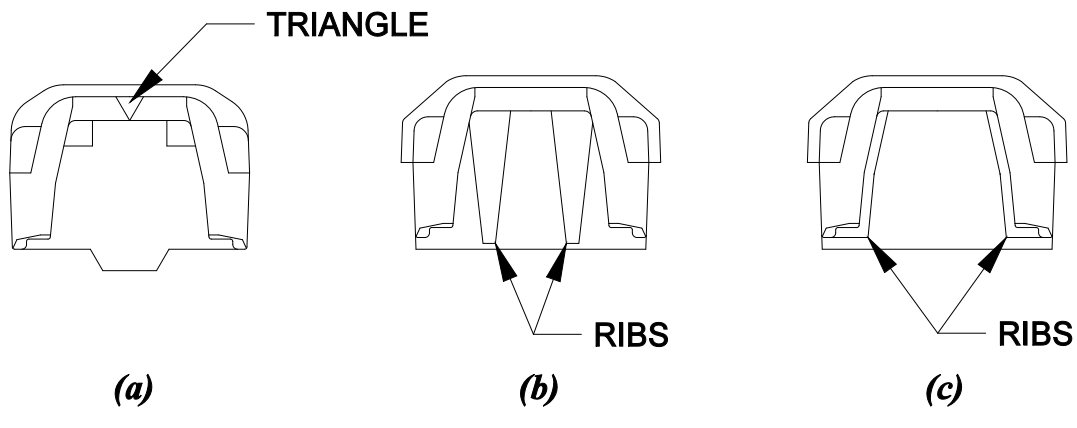

Figure 3-K-1

Step	Action
1	Identify type of tie and shoulder damaged.

IF tie type is...	AND shoulder type is...	THEN....
Cross or Switch	Pandrol e-clip	Use Item No. 503-6340
Cross	Safelok III	Use Item No. 503-6167
Cross or Switch	Safelok	Go to Step 2.

Step	Action
2	Determine existing Safelok shoulder design.

IF shoulder looks like...	THEN...
Figure 3-Q (a)	Use Item No. 503-5075
Figure 3-Q (b)	Use Item No. 503-6002.
Figure 3-Q (c)	

Table 3-R

4. When coring out damaged shoulders:
   - Use only equipment designed for this purpose. Figure 3-K-2 shows a core drilling rig used for this purpose.

Figure 3-K-2

   - Do not drill any deeper than the bottom of the shoulder leg.
   - Use approved concrete grout to affix new shoulders into ties.
   - When temperatures are above 40 deg. F use item number 503-8874.
   - If temperature is between 20 and 40 deg. F use item number 503-8875.
   - If temperature is below 20 degree F. do not grout shoulders in tie.
   - Allow grout sufficient time to cure before inserting insulators and applying spring clips. Allow at least 24 hours before trying first clip to ensure the shoulder is securely set in the tie.

3.2.7 Concrete Switch Tie Lag Inspection

During monthly switch inspections use a two pound hammer to check for broken lags. If broken lags are found be governed by the following:

1. If black lags are found to be defective, replace all lags between the switch points and heel of the switch point.
2. If gold or silver lags are found to be defective, replace all 4 lags in that switch plate.
3. In all cases where lag has been broken off inside the insert the insert must also be replaced.

3.2.8 Concrete Switch Tie Lag Repair

Concrete tie lag screws can fail and fracture inside of the plastic dowel insert. When the lag screws break off they are difficult to remove utilizing common tools. When removing lag screws from the tie with the repair kit (Item Number 503-8889) the follow practice is recommended:

1. Utilize a screw driver to remove all foreign material from and around the lag hole including within the hole itself until the top portion of defective lag is visible, refer to Figure 3-L-1.

Figure 3-L-1

2. Insert carbide drill bit into lag hole until contact is made with top portion of defective lag.
3. Operate drill while applying pressure until top portion of lag has been cleaned (appears silver) per Figure 3-L-2.

   CAUTION: A properly cleaned lag is critical to the repair process.

Figure 3-L-2

4. Using the propane torch and air compressor, remove debris from the hole and dry the hole and area surrounding the hole to remove moisture.

   CAUTION: The area must be free of water, grease or other contaminates. Failure to remove all moisture could result in a violent reaction and a less than desired weld.
5. Utilize the propane torch, dry the mold.
6. Place the six (6) inch metal pipe section into the bolt hole, per Figure 3-L-3.

Figure 3-L-3

7. Utilize the hammer to tap the pipe down onto the defective lag while keeping the pipe as vertical as possible.
8. Secure the mold handle to the mold using two screws attached to mold handle.
9. Place the mold onto the pipe and close the mold handle such that the bottom of the crucible of the mold is in contact with top of the pipe, per Figure 3-L-4.

Figure 3-L-4

10. Install the weld material cup (Item Number 503-8888) into the mold such that the metal strip is located in the slot provided in the top of the mold, per Figure 3-L-5.

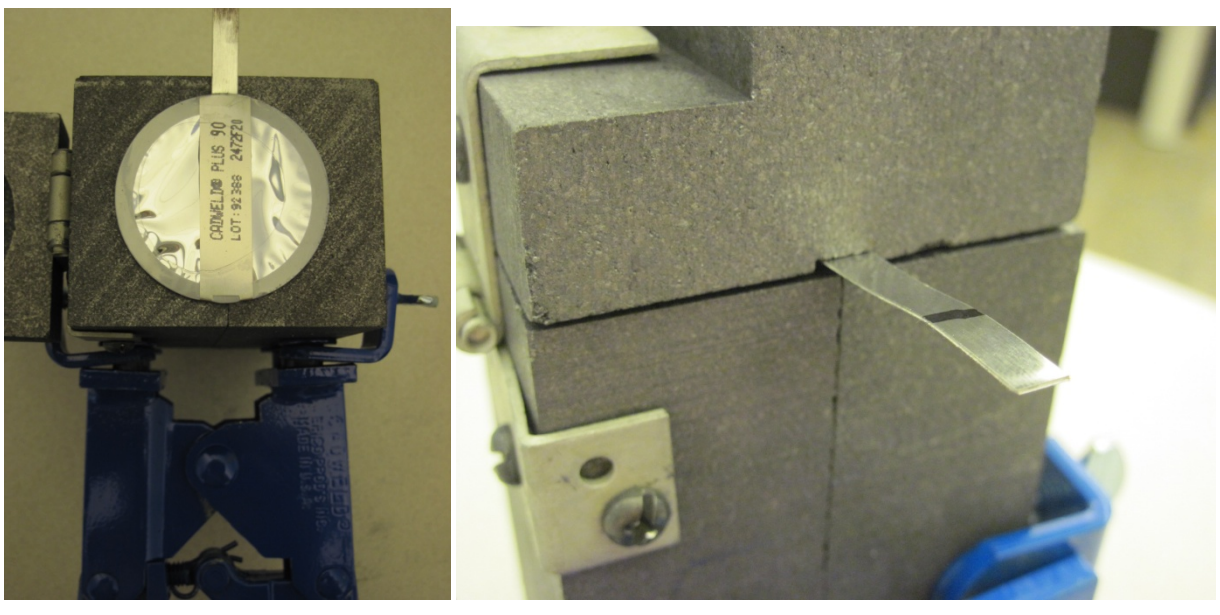

Figure 3-L-5

11. Close the mold cover.
12. Attach the igniter lead to the metal strip extending from the weld material cup, refer to Figure 4 above.
13. Move away from the mold to the fullest extent allowed by the igniter lead on the up wind side.
14. Advise any personnel in the area you are going to weld and to stand clear on the up wind side.
15. Press and hold down the button on the igniter. The green light will flash during the charge cycle. Once charged, the unit will automatically cause an ignition as long as the charge cycle is not interrupted. To interrupt the cycle, release the button.
16. After the reaction takes place wait two (2) minutes.
17. Remove the mold by releasing the clamp/handle and pulling the mold away from the pipe.

    CAUTION: The mold and pipe may be hot due to the reaction.
18. Using the brush, clean the mold of slag and residue from the reaction.
19. Allow the weld to cool for an additional five (5) minutes.
20. Install the pipe wrench or vice grips on the portion of the pipe extending from the lag hole, refer to Figure 3-L-6.

Figure 3-L-6

21. Turn the pipe wrench or vice grips back and forth for short distances ten (10) times to loosen lag.

    NOTE: If the pipe section breaks from the defective lag remove the pipe section and repeat entire procedure.
22. Turn the pipe using the pipe wrench or vice grips counter clockwise until the broken section of the bolt is free from the hole, per Figure 3-L-7.

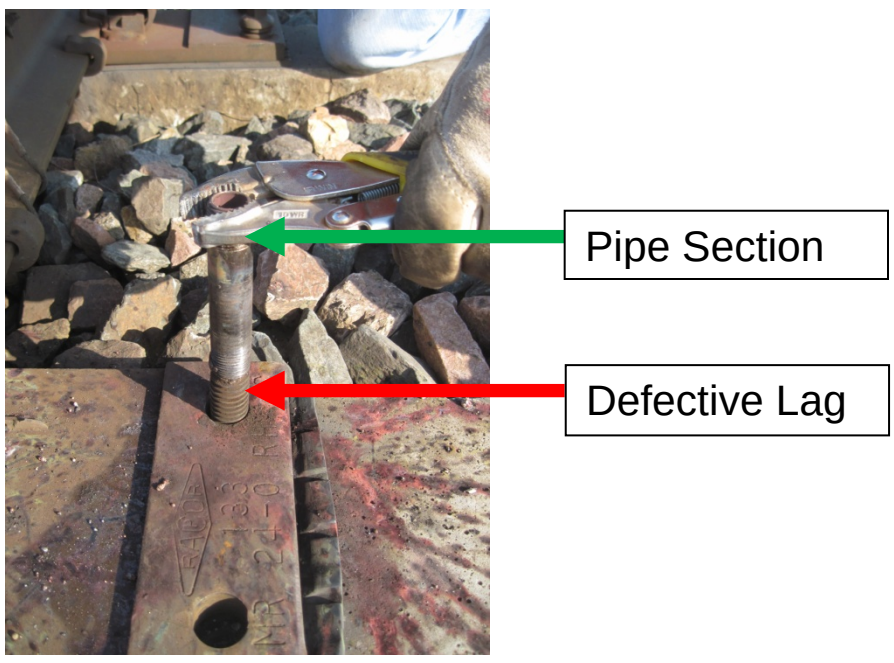

Figure 3-L-7

23. Install new lag and helical washer.
24. If damaged beyond repair, order new replacement ties with the pop-up shoulders.

3.2.9 Damaged Concrete Tie Temporary Shoulder Repair

Follow these instructions when temporarily repairing concrete tie shoulders that have been damaged in a derailment in order to get the track back in service. The Concrete Rail Securing Device (CRSD) repair can only be applied to railseats with one damaged Safelok I or Safelok III shoulder or tower. (Item number for the CRSD is 410-2136)

Note: In order to place the track back in service, the CRSD must be installed on a minimum of every 4th tie in tangent track up to 2 degrees and every other tie in curves over 2 degrees for a 25 MPH slow order. In cases where the damage to the tie exceeds the clip and the cast housing and damages the concrete under the rail seat a 10 mph and temporary use of gage rods may be required.

1. The CRSD system is a three piece system composed of two bars and one plate. See Figure 3-M-1.

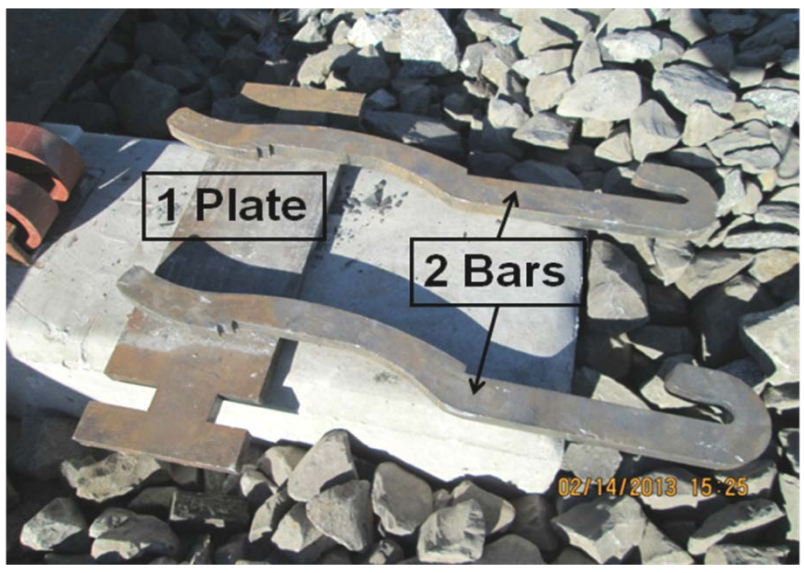

Figure 3-M-1

2. To install, place the bars under the rail as you would an anchor. See Figure 3-M-2.

Figure 3-M-2

3. Then hammer the plate from the field side until it is in contact with the remaining intact shoulder. The bars should then fall into place and be securely hooked into the slots of the plate. See Figure 3-M-3.
   - For Safelok I applications install the short slot in the plate to the field side.
   - For Safelok III applications install the long slot in the plate to the field side.
   - If the system is loose, it is installed incorrectly and the plate needs to be turned around.

Figure 3-M-3

3.2.10 Insulated Joints in Concrete Tie Track

1. Insulated joints in concrete tie track must not be allowed to remain in track if the joint has slipped and insulation is broken down between the bars and the rail. Refer to Section 8.6.15 Insulated Joint Bar Inspections for guidelines.
2. Insulated joints in concrete tie track must be properly supported.

3.3 Elastic Fasteners

3.3.1 Spring Clips

In elastically fastened track, spring rail clips provide enough toe load to prevent rail roll-over and restrain the rail from moving longitudinally. This is a critical component of the fastening system and must be maintained.

1. Replace clips that have been sprung, bent, broken or cracked.
2. Clips can and will lose the designed toe load, when this occurs, longitudinal movement may take place.
3. Replace all rail clips when performing program work on elastic fastener ties.

4. Install galvanized spring clips in road crossings, tunnels or other corrosive environments.
5. Ensure spring clips match the fastening system design of the tie and use the components for the various applications in signalized or circuited track as shown in Table 3-S.

Spring Clip Applications				
Tie Type	**Fastening System**	**Standard Tie**	**Insulated Joint**	**Standard Joint**
Concrete	Safelok 1	Spring clip and insulator	Insulated joint spring clip, insulated joint insulator.	Spring joint clip and cast joint spacer
Concrete	Pandrol e-clip	e-clip and insulator	Modified e-clip and insulated joint insulator	Modified e-clip
Concrete	Safelok III	Spring clip and insulator	Modified spring clip, cast insulated joint spacer and insulated joint insulator	Modified spring clip and cast joint spacer
Steel	Pandrol e-clip	e-clip and insulator	Modified e-clip and insulated joint insulator	Modified e-clip
Wood	Safelok 1	Spring clip	Insulated joint clip and insulated joint insulator.	Spring joint clip
Wood	Pandrol e-clip	e-clip	Modified e-clip	Modified e-clip

Table 3-S

NOTE: Joints in concrete tie track directly across from one another cannot be insulated.

6. Table 3-T below summarizes the most common spring clips.

Common Spring Clip Types		
Spring Clip Color	**Fastening System**	**Application**
Red, Gray, Black or Brown	Safelok 1 or 3	Standard, for use in general applications
Silver	Safelok 1 or 3	Galvanized, for use in grade crossings and other wet or corrosive environments
Black, Red	Safelok 1	Long reach for use with 10 mm wide post insulators on curves > 1 degree 30 minutes
Yellow	Safelok 1 or 3	Modified fingers, for use on both standard and insulated joints
Blue	Safelok 1	Modified fingers, for use with standard joints

Table 3-T

3.3.2 Safelok I Clips

Figure 3-N-1

1. Inspect SAFELOK I Clips to make sure that they are not sprung.
   - The top of the inside of the prong should be even with the bottom of the outside of the rail clip. Refer to Figure 3-N-2.
   - The distance between the bottom of clip and the bottom of the prong should be a minimum of 1/8" and a maximum of 3/8”.
   - Used on both concrete and wood ties.

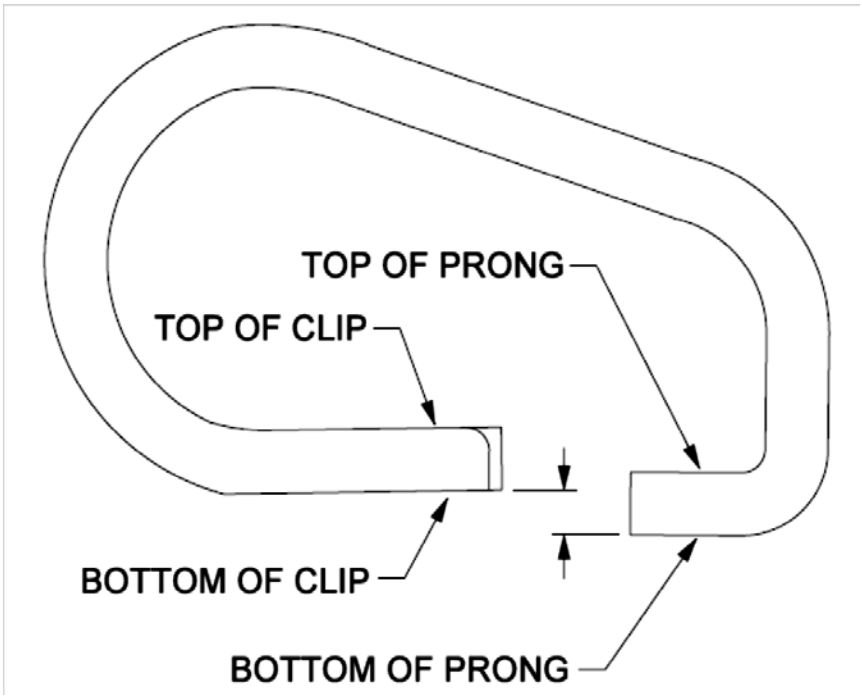

Figure 3-N-2

2. Do not overdrive Safelok I spring clips. If clips are applied properly:
   - The prongs will extend beyond the gage face of the shoulder by 1/8 to 3/16 inch.
   - The base will be in full contact with the shoulder as shown in Figure 3-N-3.

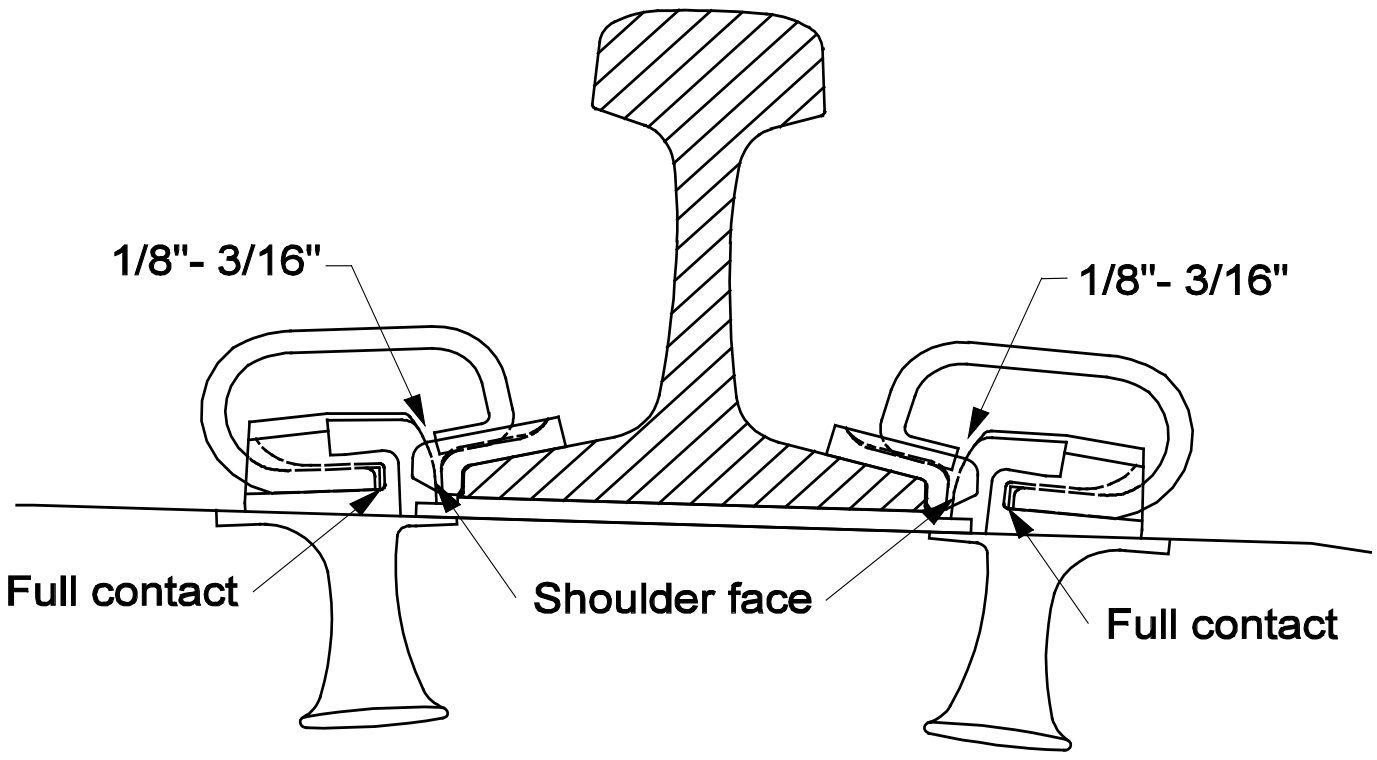

Figure 3-N-3

3.3.3 Safelok III Clips

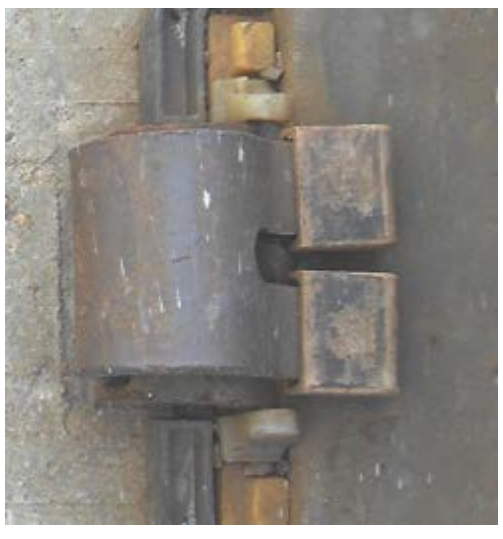

Figure 3-O-1

1. Do not overdrive Safelok III spring clips. If clips are installed properly:
   - The toe insulator will extend onto the base of the rail 5/16 inch.
   - The base of the clip will be in full contact with the shoulder as shown in Figure 3-O-2.
2. Safelok III spring clips are currently only utilized in concrete tie applications.

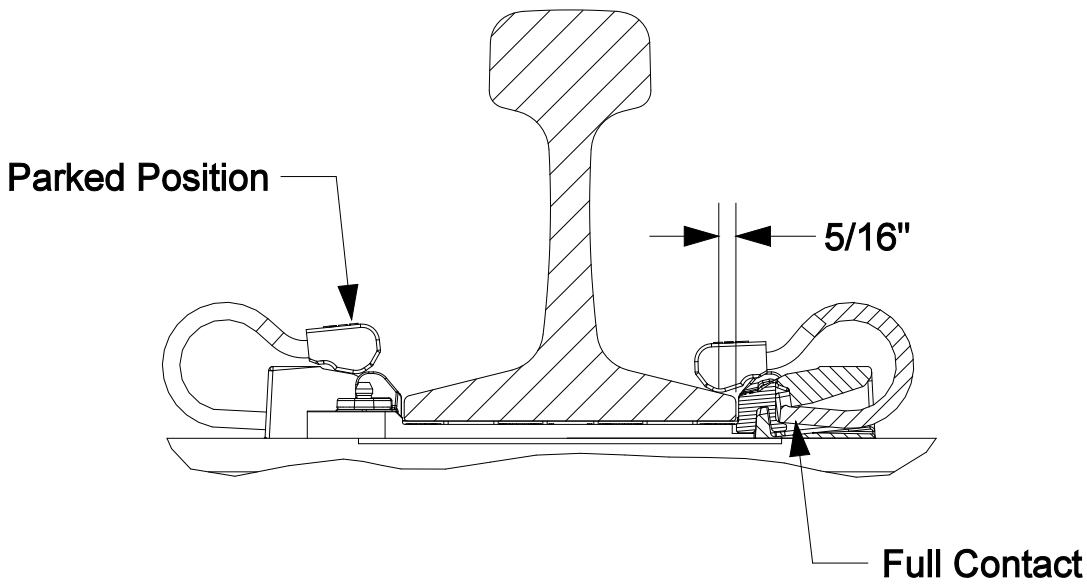

Figure 3-O-2

3.3.4 E-Clips

Figure 3-P-1

1. Do not overdrive e-clips. If installed correctly there will be a 3/8” clearance between bend in clip and clip housing. See Figure 3-P-2. Over driving the clip can cause clip breakage over time.
2. Can be used on concrete or wood ties.

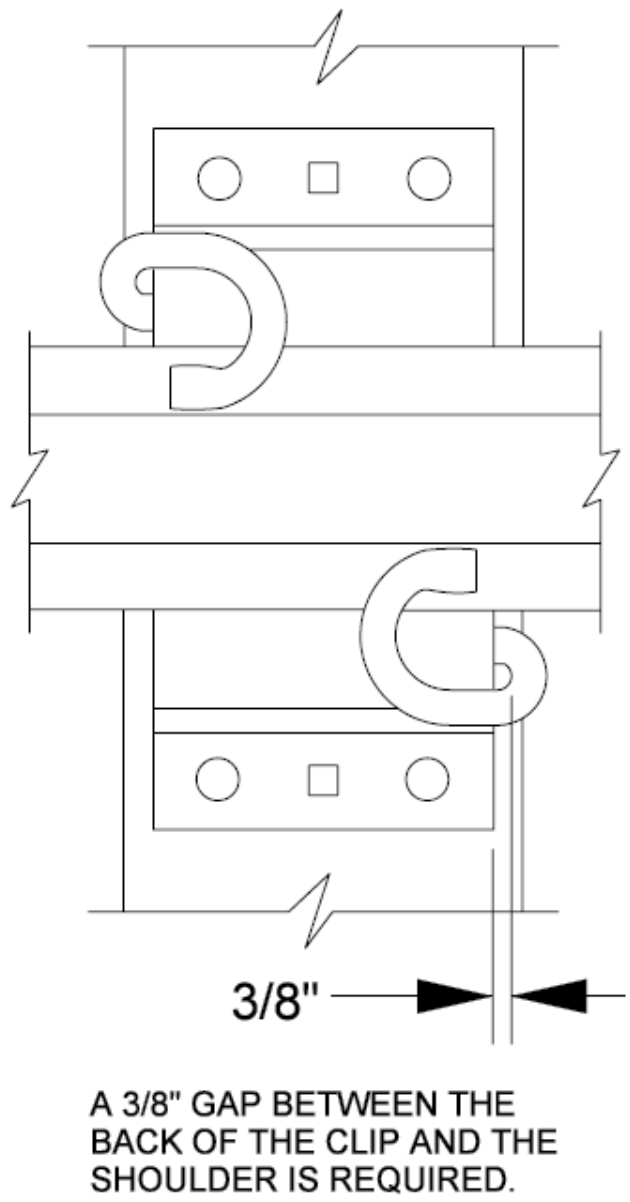

Figure 3-P-2

3.3.5 Vossloh Fastening System

The W30HH Vossloh Fastening System is a type of concrete tie elastic fastening system that is used with Vossloh concrete ties.

A. Vossloh Fastening System Parts

Vossloh fastening system parts list for one tie. See Standard Drawing Nos. 0465 and 0466:

	ITEM	ITEM NUMBER	QUANTITY PER TIE
1	Lag Screw	503-8651	4
2	Fastener	503-8650	4
3	Insulator (Gage Side)	503-8652	2
4	Insulator (Field Side)	503-8653	2
5	Rail Pad	503-8654	2
6	Wear Plate	503-8655	2
7	Insert	503-8640	4

Table 3-U

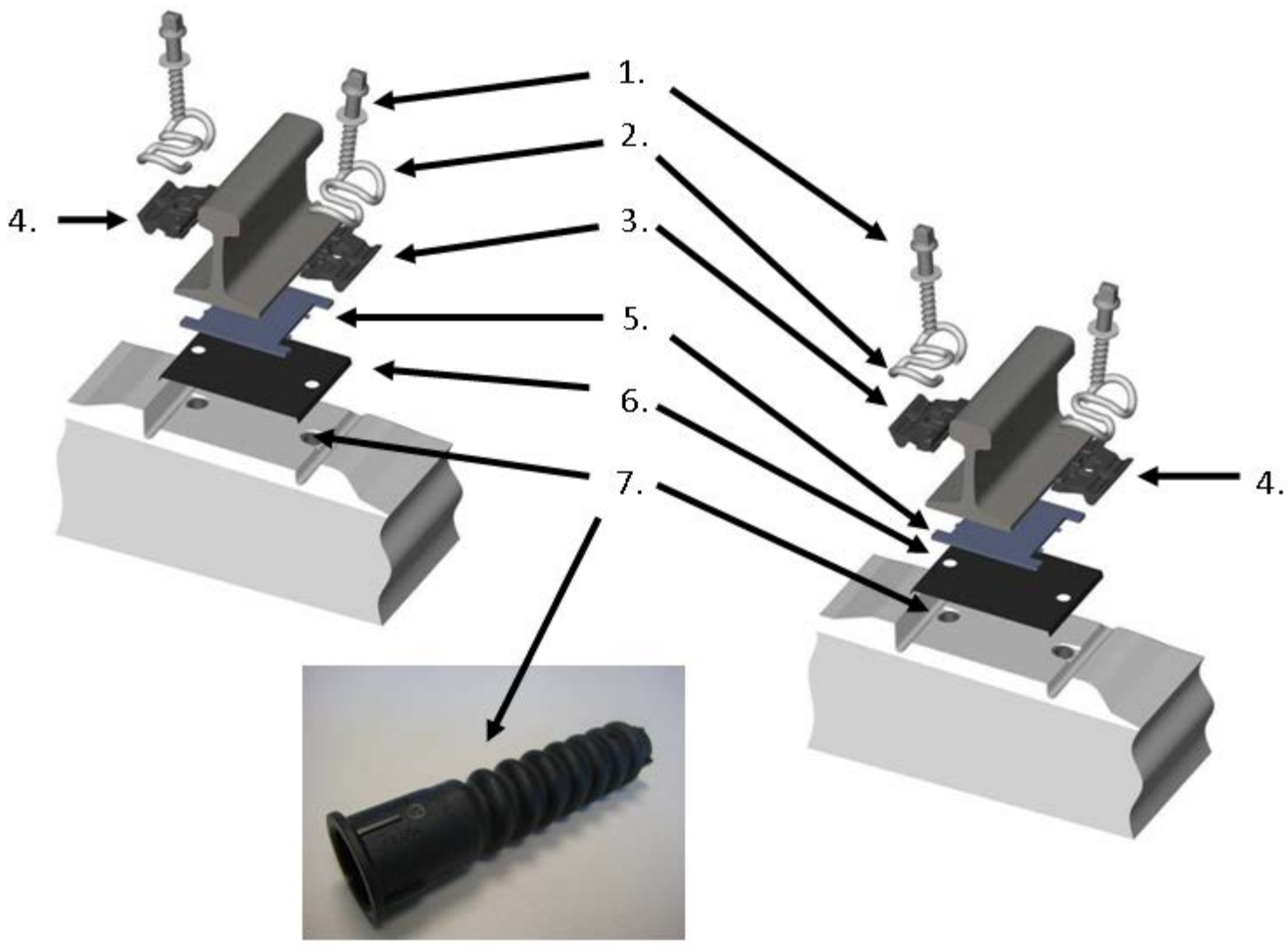

Figure 3-Q

B. Fastener Installation

Follow these requirements when installing the Vossloh fastening system:

1. The ties come to the site pre-assembled with the fasteners (Item Number 503-8650) in the parked position as shown in Figure 3-R.

Figure 3-R

2. Place the rail in the correct position on the tie seat between the insulators (Item Number 503-8652 or 503-8653) and on top of the rail pads (Item Number 503-8654) and wear plate (Item Number 503-8655).
3. Loosen lag screws (Item Number 503-8651) with a 7/8” socket approximately 1 to 1-1/2 counter clockwise direction turns.
4. Move the fastener (Item Number 503-8650) from the parked position to the full contact position. The fastener (Item Number 503-8650) has to rest on the top of the rail as shown in Figure 3-S.

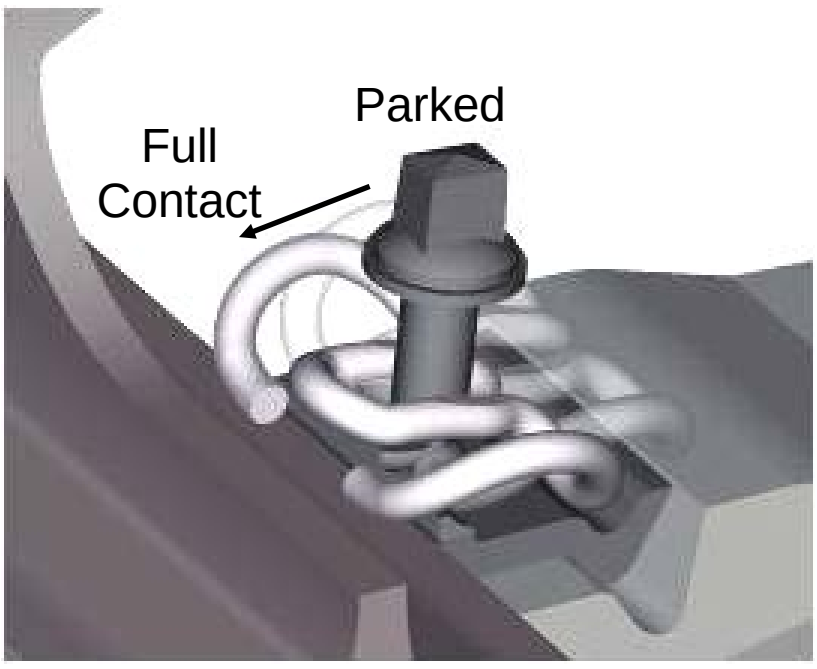

Figure 3-S

5. Tighten the lag screw (Item Number 503-8651) with a 7/8” socket until the middle bend of the fastener (Item Number 503-8650) is in contact with the insulator (Item Number 503-8652 or 503-8653).
6. Verify that the fastener (Item Number 503-8650) is in contact with the insulator (Figure 3-T, Item Number 503-8652 or 503-8653) but with a gap between the middle bend and the rail (Figure 3T).

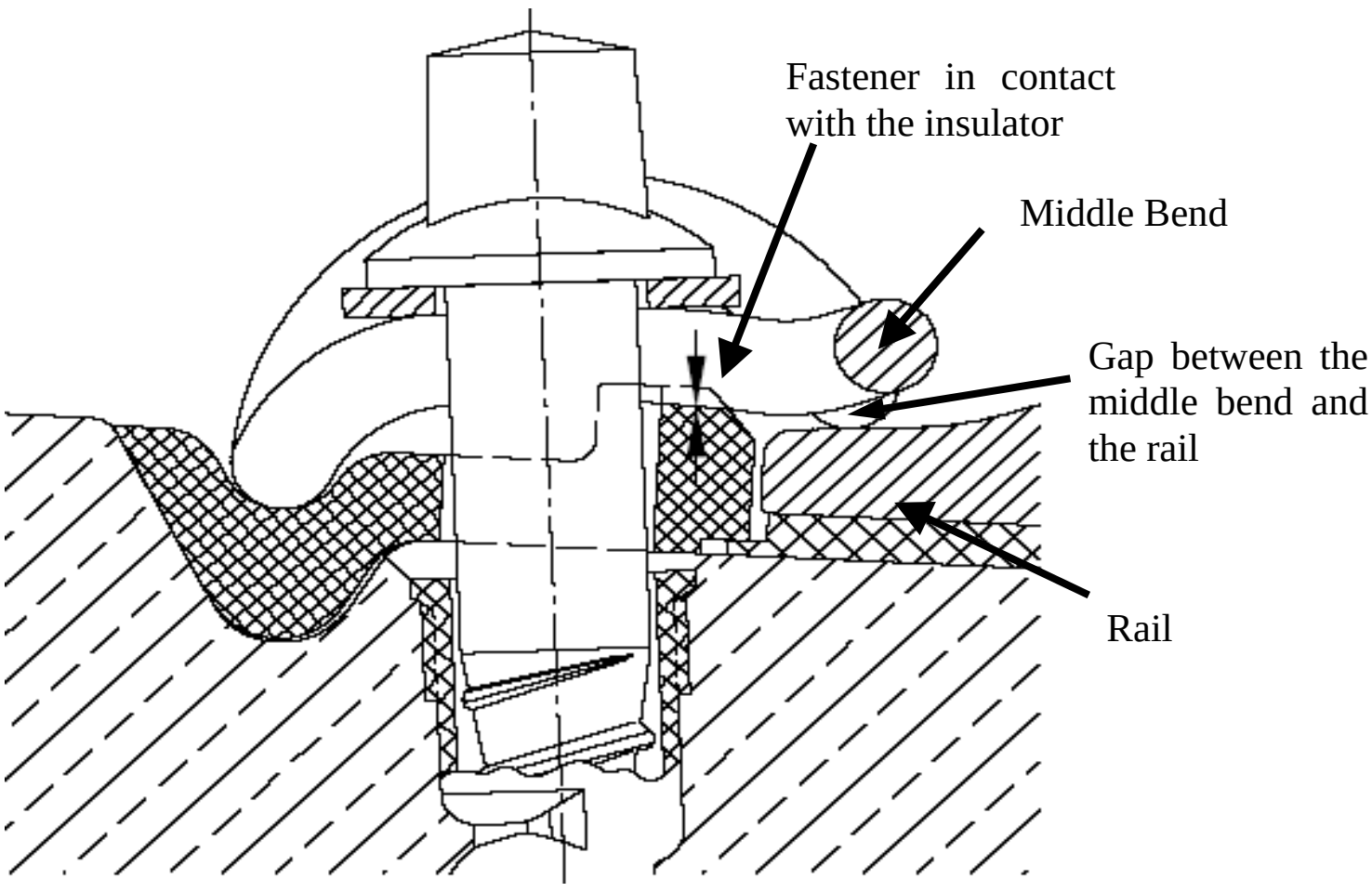

Figure 3-T

Correctly Installed:

Middle bend contacting the insulator

Note there is a gap between the middle bend and the rail by design

*Figure 3-*U

Incorrectly Installed:

Notice the large gap between the middle bend and the insulator

Figure 3-V

C. Broken Lag Removal

Follow these requirements when removing a broken lag screw from the Vossloh fastening system:

1. Remove the insulator (Item Number 503-8652 or 503-8653) from the side of the rail with the broken lag screw.
2. Clean out the hole of the broken lag screw to remove any debris that may get in the way of the removal process.
3. Insert the broken lag screw removal tool (Figure 3-W, Item Number 410-0962) into the lag hole.

*Figure 3-*W

4. Using an impact wrench or a ratchet as shown in Figure 3-X, turn the broken lag screw removal tool (Figure 3-W, Item Number 410-0962) counterclockwise until the broken lag screw is loose enough to be screwed out by hand.

*Figure 3-*X

D. Insert Replacement

Follow these requirements when replacing an insert from the Vossloh fastening system:

1. To remove the previous insert (Figure 3-Q, Item Number 503-8640), drive the insert replacement tool (Figure 3-Y, Item Number 410-0963) with a 2-4 lb hammer into the insert (Figure 3-Z, Item Number 503-8640) until the bottom ring (Figure 3-Z) on the tool is in contact with the surface of the concrete tie or the top of the insert (Item Number 503-8640).

*Figure 3-*Y

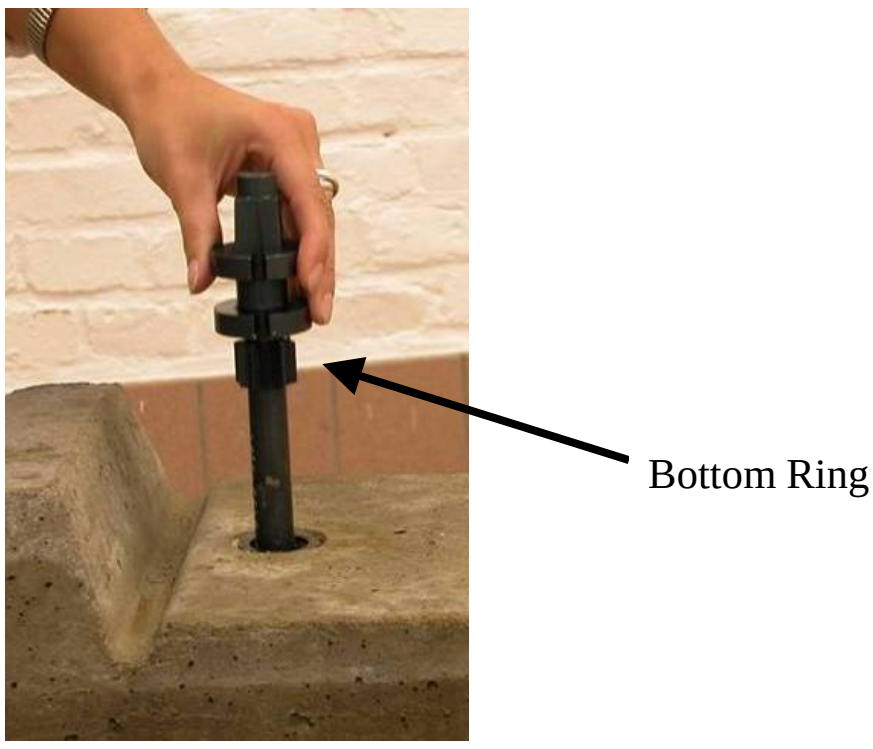

Figure 3-Z

2. Using an impact wrench or a ratchet with a 7/8” socket, unscrew the complete insert (Item Number 503-8640) counter clockwise out of the tie.
3. Take out the insert (Item Number 503-8640) with the insert replacement tool (Item Number 410-0963).
4. Use a 2-4 lb hammer and a bar or a screwdriver to hammer the insert replacement tool (Item Number 410-0963) out of the insert (Item Number 503-8640).
5. Screw the replacement insert (Item Number 503-8640) into the tie as far as possible by hand.
6. Drive the insert replacement tool (Item Number 410-0963) with a 2-4 lb hammer into the insert until the bottom ring on the tool (Figure 3-Z) is in contact with the surface of the concrete tie or the top of the insert (Item Number 503-8640).
7. Advance the insert (Item Number 503-8640) with the screwing device by rotating clockwise.
8. Using an impact wrench or a ratchet with a 7/8” socket, screw the complete insert (Item Number 503-8640) in clockwise.

E. Vossloh Joint Fastenings

Follow these requirements when installing the Vossloh fastening system on a standard non-insulated joint:

- Use the standard insulators (Item Number 503-8652 or 503-8653) with the joint fastener (Item Number 503-8656) as shown in Figure 3-AA.

Figure 3-AA

Follow these requirements when installing the Vossloh fastening system on an insulated joint:

1. Place the insulated joint insulator (Figure 3-BB, Item Number 503-8657) on the rail base.

Figure 3-BB

2. Place the joint fastener (Figure 3-CC, Item Number 503-8656) on the standard insulator (Item Number 503-8652 or 503-8653) and the insulated joint insulator (Item Number 503-8657) as shown in Figure 3-CC. See Standard Drawing No. 0468

***Figure 3*-CC**

3. Tighten the lag screw (Item Number 503-8651) with a 7/8” socket until the middle bend of the joint fastener contacts the standard insulator (Item Number 503-8652 or 503-8653) as shown in Figure 3-T.

F. Rail Relay on Ties with the Vossloh Fastening System

Follow these requirements when installing rail on ties with the Vossloh fastening system:

1. Remove lag screw (Item Number 503-8651), fastener (Item Number 503-8650) and insulator (Item Number 503-8652 or 503-8653).
2. Place tape or insert caps (Figure 3-DD, Item Number 503-8641) over the insert hole to prevent debris from getting in the insert.

***Figure 3*-DD**

3. Remove the rail and change the rail pad (Item Number 503-8654) and the wear plate (Item Number 503-8655).
4. Place the new rail pad (Item Number 503-8654) and wear plate (Item Number 503-8655) on the rail seat.
5. Place the insulator (Item Number 503-8652 or 503-8653), lag screw (Item Number 503-8651) and fastener (Item Number 503-8650) on the rail seat.
6. Tighten the lag screw (Item Number 503-8651) in the parked position as shown in Figure 3-S and then place the new rail on the rail seat.
7. Move the fastener (Item Number 503-8650) onto the rail base and tighten the lag screw (Item Number 503-8651) until the middle bend of the fastener (Item Number 503-8650) is in contact to the insulator (Item Number 503-8652 or 503-8653) as shown in Figure 3-T.

3.3.6 Insulated Joint Fastenings

Install insulated joint bar insulators between special spring insulated joint clips and the rail base of bonded insulated joints on concrete, steel, or wood ties that use the Safelok system. See Standard Drawing No. 0427 or 0432 depending on clip type. For an insulated joint e-clip see Standard Drawing No. 132600.

3.3.7 Weld-On Shoulders

Safelok weld-on shoulders are insulated or non-insulated and differ by height. The insulated shoulder is approximately 5/16 inch higher than the non-insulated as shown in Table 3-V.

Weld-On Shoulder Types and Dimensions	
Shoulder Type	**Approximate Height**
Non-Insulated	1-1/8 inch
Insulated	1-7/16 inch

Table 3-V

Safelok weld-on shoulder applications include:

- Special plate work fastened to concrete, wood or steel ties in turnouts.
- Plate work directly applied to steel turnout ties at the frog base.

A. Installing Non-Insulated Weld-on Shoulders

Install non-insulated weld-on shoulders:

- To plate work where spring clips fasten the rail base.
- Directly to steel turnout ties to fasten the rail base of other than self-guarded frogs.

B. Installing Insulated Weld-on Shoulders

Install insulated weld-on shoulders:

- To plate work under insulated or standard joints.
- To frog plates where spring clips fasten to the thicker base of self-guarded frogs in wood turnouts.
- Directly to steel turnout ties to fasten to the thicker rail base of self-guarded frogs.

C. Replacing Weld-on Shoulders

Replace weld-on shoulders damaged from derailments or other causes when they do not effectively hold the rail clip in place.

Replace damaged weld-on shoulders with similar shoulders.

D. Welding Weld-on Shoulders

Weld weld-on shoulders to special plate work or steel turnout ties with a 3/8-inch fillet weld using an E7018 welding rod.

E. Installing Weld-on Shoulders in Various Applications

Follow these requirements:

1. When installing non-insulated weld-on shoulders in the following applications, maintain a 1/16-inch gap between the rail base and the front face of the shoulder. See Figure 3-EE.
   - Plate work under standard joints that uses cast joint spacers and spring joint clips.
   - Plate work where spring clips fasten to the rail base or the base of frogs.
   - Steel turnout ties where spring clips fasten to the rail base of frogs.

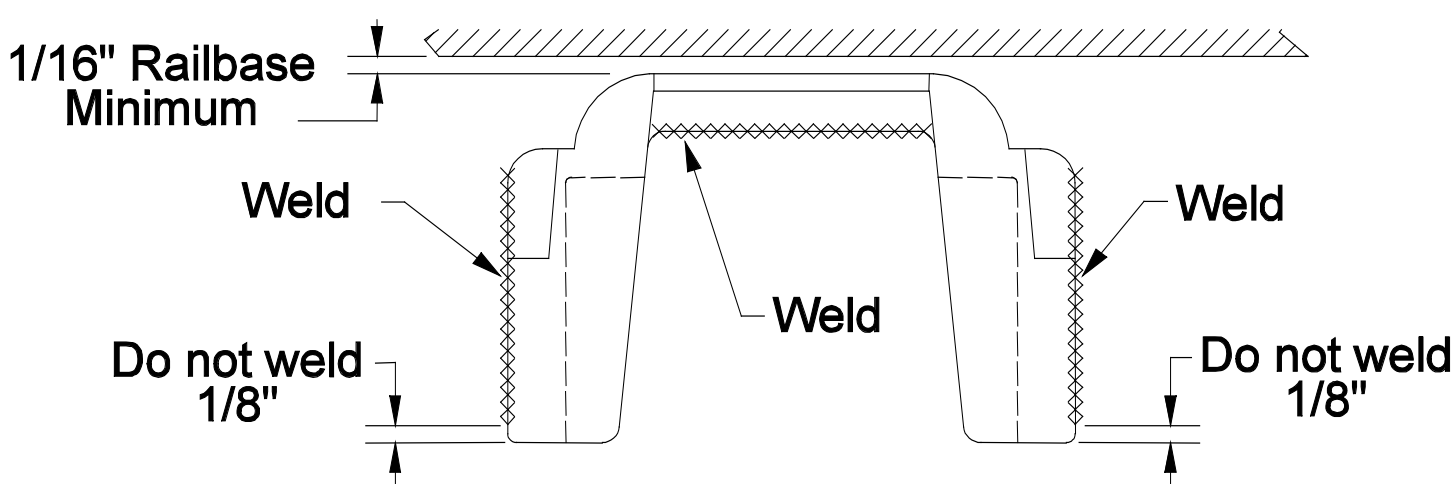

Figure 3-EE

2. When installing insulated weld-on shoulders in the following applications, maintain a 5/16-inch gap between the rail base and the front face of the shoulder to allow for the installation of insulators or cast spacers (see Figure 3-FF).
   - Plate work under insulated joints that uses insulated joint insulators, cast pins, and insulated joint spring clips.
   - Plate work fastened to steel turnout ties in a signalized or circuited application that uses plastic insulators.
   - Base plates of guard rails that use cast spacers.

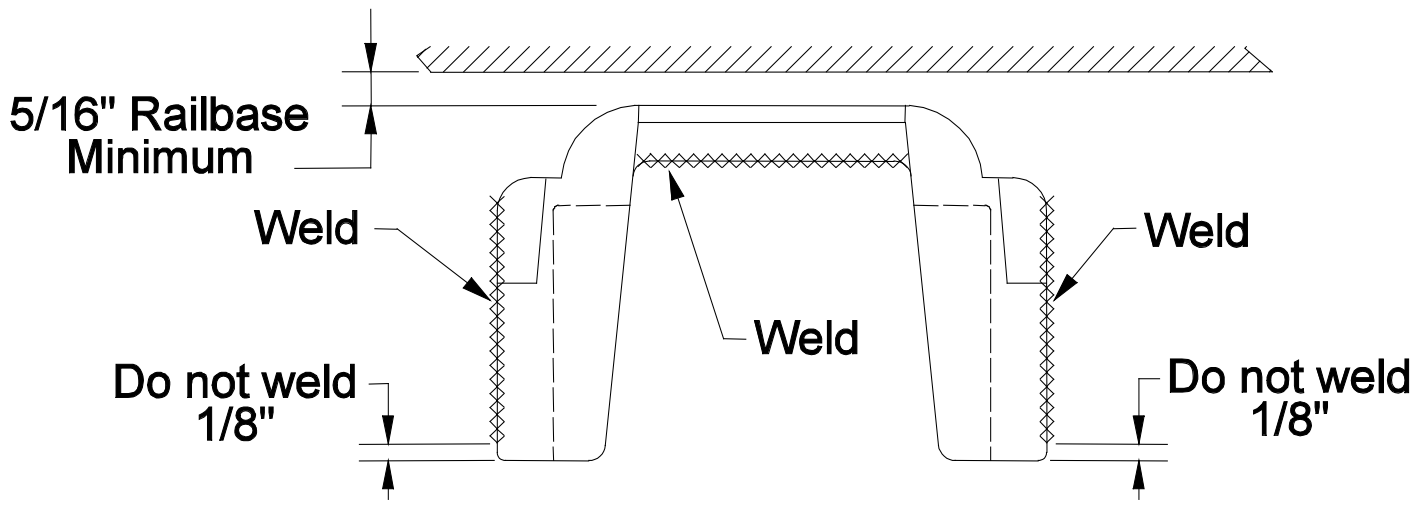

Figure 3-FF

3.3.8 Hook-In Shoulders

Steel cross and switch ties use hook-in shoulders to apply spring clips. The hook-in shoulder must match the steel tie thickness.

1. Identify the proper hook-in shoulder from Table 3-W.

Hook-In Shoulder Types and Steel Tie Dimensions		
Shoulder Type	**Steel Tie Type**	**Tie Thickness**
12 millimeter	Existing Tunnel or Mainline Ties	12 millimeter
10 millimeter	Yard Track Tie	10 millimeter
10 millimeter	Turnout Tie	10 millimeter

Table 3-W

2. Replace hook-in shoulders damaged from derailments or other causes when they do not effectively hold the rail clip in place.

3.4 Tie Plates

3.4.1 Double Shoulder Tie Plates

A double-shoulder tie plate (See Figure 3-GG) is designed to:

- Protect the wood crosstie from damage by distributing vertical and lateral wheel loads over a wider area.
- Establish and maintain track gage accurately and securely.
- Provide inward rail cant for proper positioning of the wheel on the rail head.
- Resist tie skewing through interaction between the rail base and the plate shoulders.

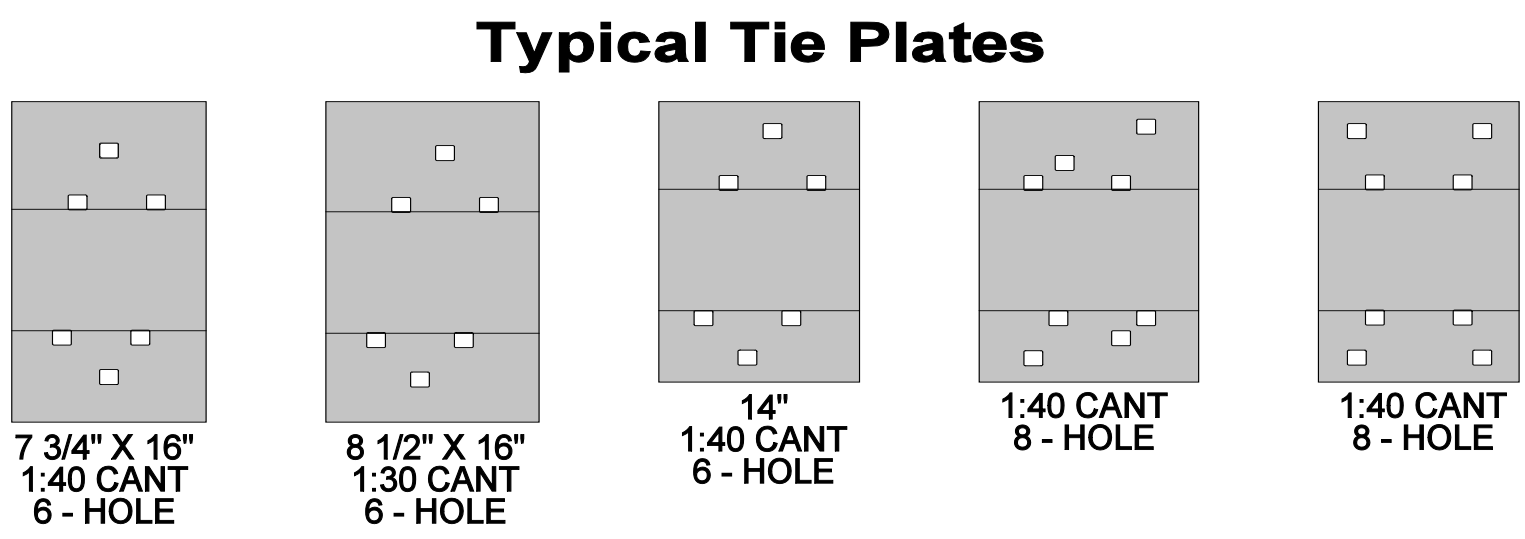

Figure 3-GG

3.4.2 Tie Plate Requirements

Follow these requirements when installing tie plates:

1. Apply tie plates to all wood and composite ties.
2. Do not intermix plates of different sizes and cant along the same rail.
3. Install tie plates so that:
   - Plates have full even bearing on the ties.
   - Field-side plate shoulder is square against the field-side base of the rail.
   - Plate is centered on the tie.
   - Proper cant is provided to the rail when the wide side of the plate is on the field side. See Figure 3-HH.
   - Do not reuse broken, bent, worn, or corroded tie plates.

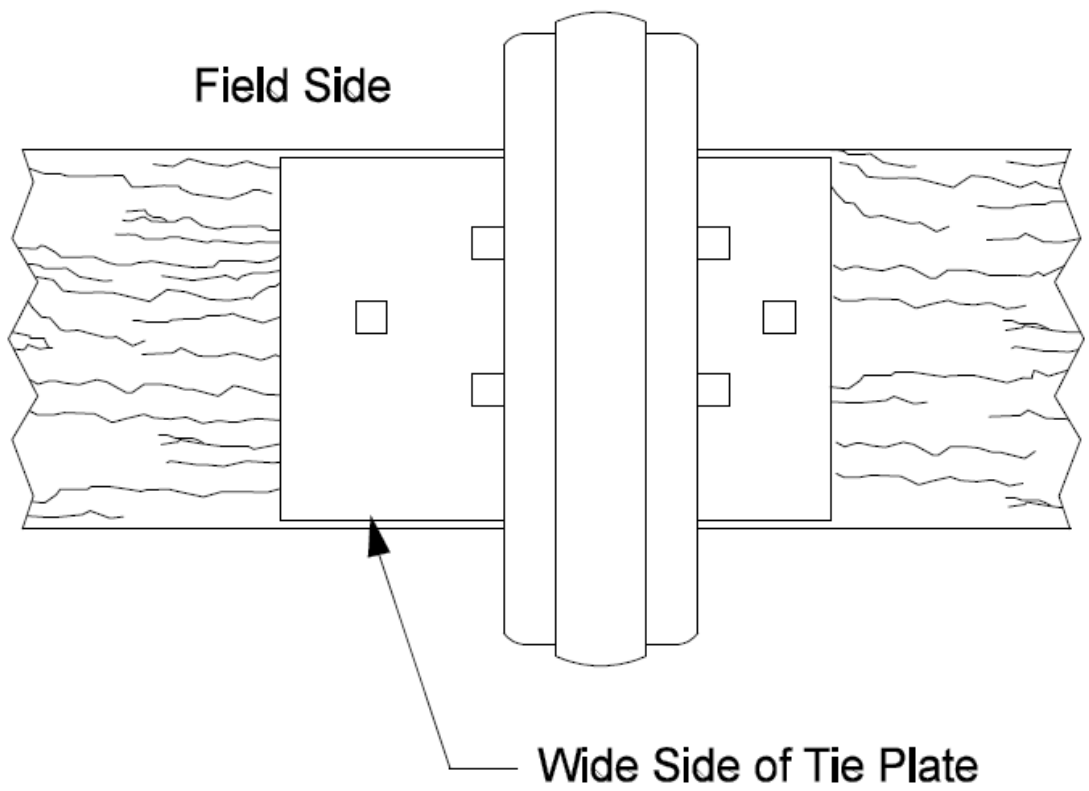

Figure 3-HH

See Table 3-X for types of tie plates.

Size and Type	Road	Cant
DBL Single shoulder 5-1/2" and 6" base rail	SP	1:40
DBL shoulder 8" x 14" for 6" base rail	UP/SP/ CNW	1:40
DBL shoulder 5-1/2" base rail	UP/ MP/CNW	1:40
DBL shoulder 8-1/2" x 16" for 6" base rail	UP	1:30
Cast Plate for Safelok fastening 16" prior to year 2003	UP	1:30
Cast Plate for Safelok fastening 18"	UP	1:40
Cast Plate for Safelok fastening 16” after year 2003	UP	1:40
DBL shoulder 7-3/4" x 16" for 6" base rail	UP	1:40
Rolled e-clip plate 7-3/4” x 16” for 6” base rail	UP/CNW/SP	1:40

Table 3-X

3.4.3 Curve Blocks

Install tie plates with curve blocks in main track curves of 3 degrees or higher, or at other locations designated by the Chief Engineer. See Figure 3-KK for tie plate requirements.

Install tie plates with curve blocks on every fourth tie as shown in Figure 3-II.

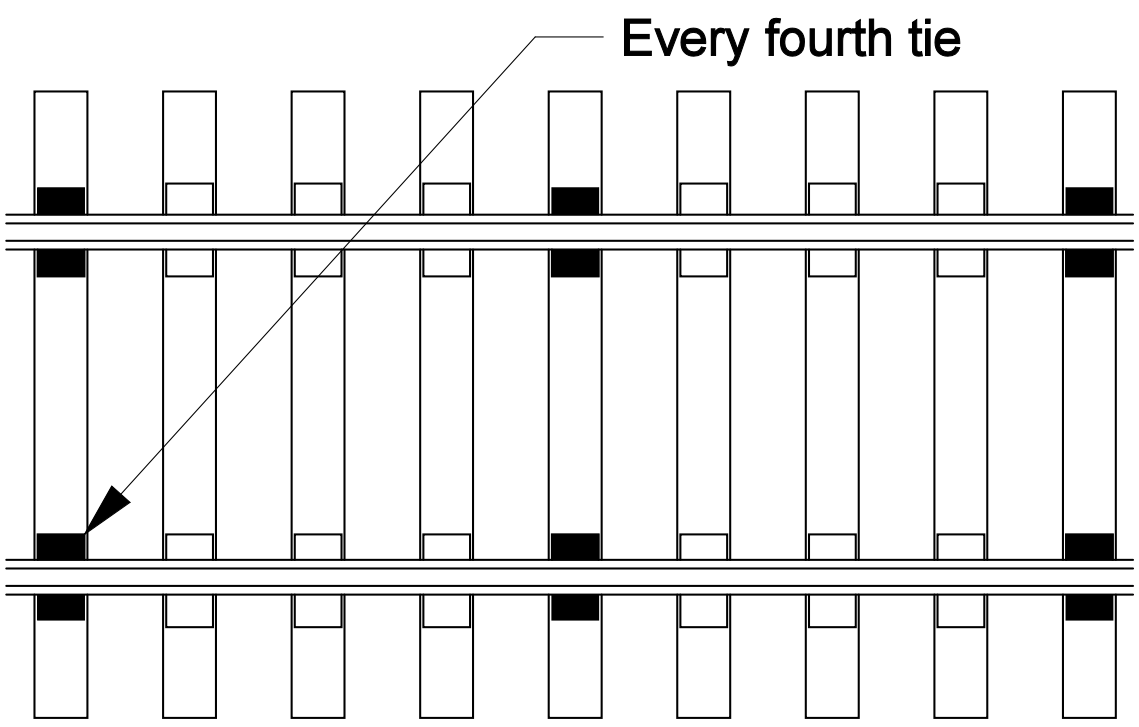

Figure 3-II

3.4.4 Elastic Fastener Plates

Elastic fastener plates are used in specific locations to assist in holding gage, and areas of special track work. (Figure 3-KK)

1. Any new application on curves greater than or equal to 6 degree will get Elastic Fasteners
2. Any curve, any degree, with our existing Elastic Fastener lag plate on the HIGH side will remain in track.
3. Any curve with our existing Elastic Fastener lag plate on the low side less than 6 degrees will get changed out to curve blocks.
4. Any curve with our existing Elastic Fastener lag plate on the low side greater than or equal to 6 degree will keep its Elastic Fastener lag plate.
5. Any new application on curves 3 to less than 6 degree will get curve blocks.

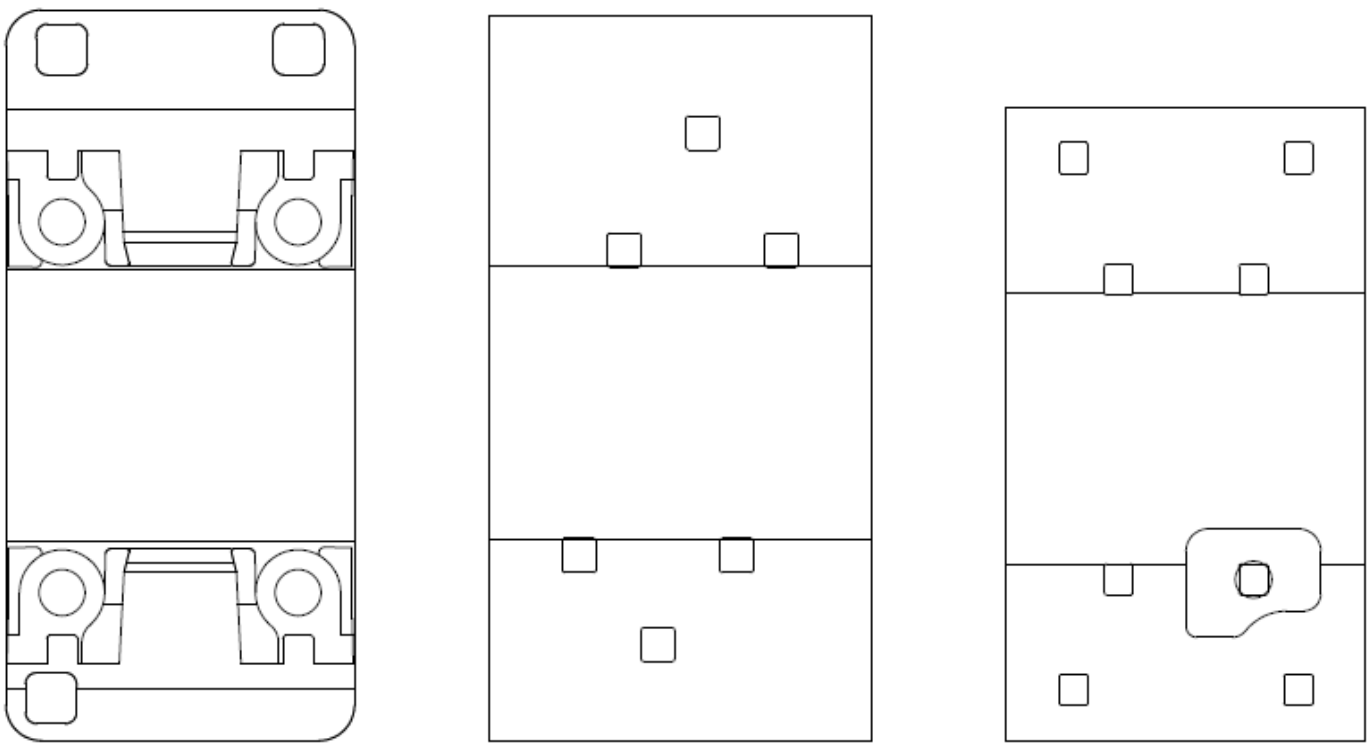

Elastic Fastener Plate (Cast Plate) Double Shoulder Curve Block Plate

Figure 3-JJ

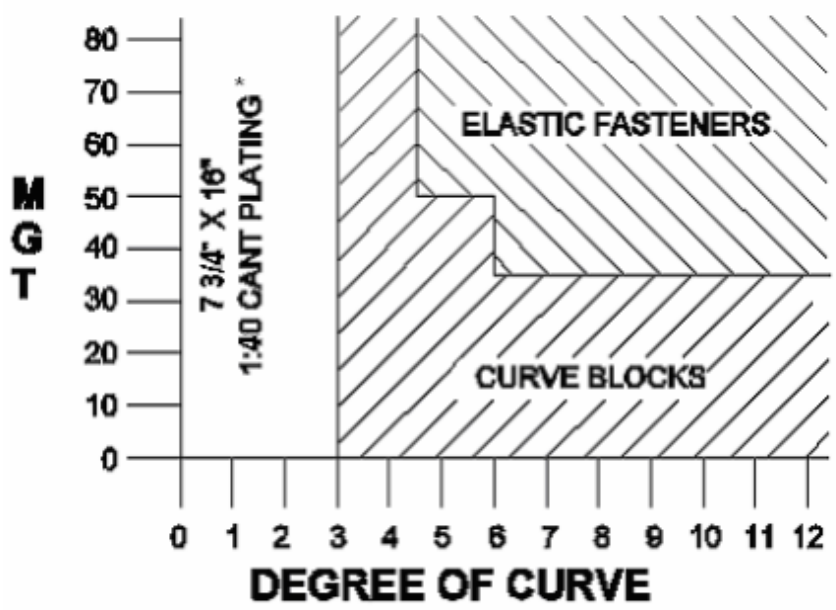

ALL SOFTWOOD TIES REQUIRE 16" TIE PLATES.
ALL TRACK CARRYING MORE THAN 50 MGT REQUIRES 16" TIE PLATES.

* EXISTING 16" TIE PLATES MAY BE USED IF WEAR DOES NOT EXCEED 1/8".

Figure 3-KK

3.5 Spikes and Screws

3.5.1 Spikes

Spikes fasten rail, tie plates, switch stands and other devices to wood and composite ties. Follow these requirements:

1. Spike each tie with a minimum of two rail spikes per plate.
2. Before driving spikes, properly align ties and center tie plates.
3. Maintain uniform standard track gage within permissible limits when spiking.
4. Use new spikes for rail spikes and good second-hand spikes for hold-down spikes when available.
5. Drive spikes vertically with the face in contact with the base edge of the rail.
6. Drive spikes just until they contact the rail. Over driving spikes may damage the base of the rail.

3.5.2 Joint Spikes

Follow these requirements when spiking joints:

1. When spiking insulated joints, turn spike heads away from the rail.
2. Do not drive spikes into the slots or holes of skirted joint bars. Do not drive rail spikes within 2 inches of the end of skirted joint bars.
3. When driving rail spikes within 2 inches of the ends of non-skirted joint bars, leave the spikes up approximately 2 inches to allow the joint bar to bypass the spike head if rail movement occurs.

3.5.3 Spike Pattern

Standard spiking patterns are required during tie renewal, rail relay and new construction, unless the Chief Engineer Maintenance has approved an exception.

During rail and tie renewals, additional spikes may be required to bring track into compliance with the standard pattern. Track ties not being replaced also may require additional spiking.

Use Table 3-Y, Table 3-Z, Table 3-AA, and Figure 3-LL to determine proper spiking patterns.

Note: Locations with permanent speed restrictions must have spike patterns based on a subs predominant class of track. For example, if a mile long section of track is permanently slow ordered to Class 3, but the sub's predominant class of track is Class 5 then the mile long section requires Class 5 spike patterns.

Main Track and CTC Sidings Less Than 40 MPH	
Application	**Pattern**
Tangents and curves less than 1° 30'	1
Curves at least 1° 30' but less than 4°	3
Curves at least 4° but less than 8°	4
Curves 8° or more and Turnouts	5

Table 3-Y

Main Track and CTC Sidings 40 MPH or More	
Application	**Pattern**
Tangents and curves less than 30'	2
Curves at least 30’ but less than 1° 30”	3
Curves at least 1° 30' but less than 4°	4
Curves 4° or more and Turnouts	5

Table 3-Z

Yard and Industry Tracks	
Application	**Pattern**
Tangents and curves less than 4°	1
Curves at least 4° but less than 8°	3
Curves 8° or more	4
Turnouts	5

Table 3-AA

**For Composite tie spiking patterns on eight hole plates refer to Figure 3-A

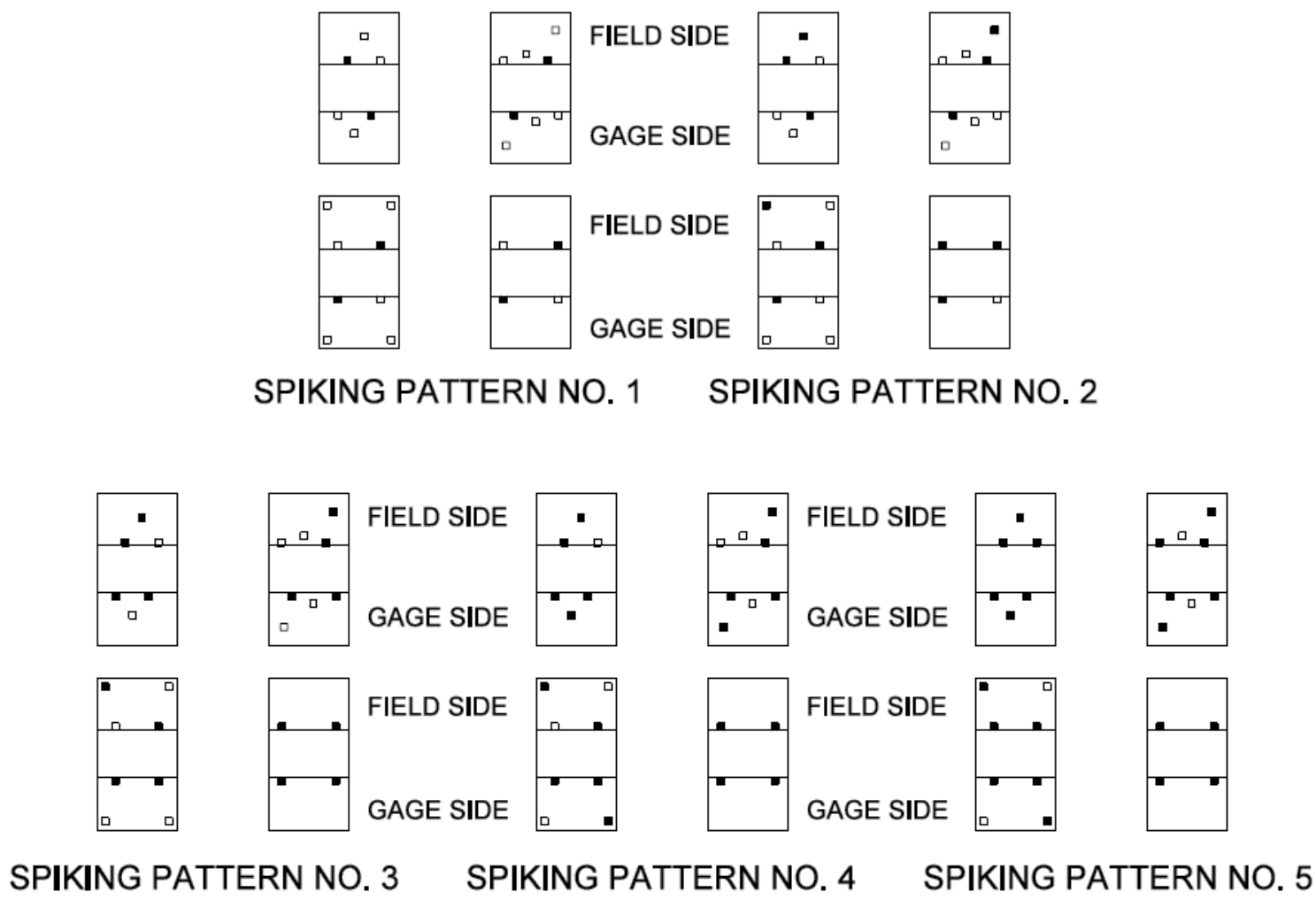

Figure 3-LL

Where only one outer rail spike is required, and tie plates with offset spike holes are used, drive the outer rail spikes in the spike hole punched nearest to the center of the tie plate. See Figure 3-MM.

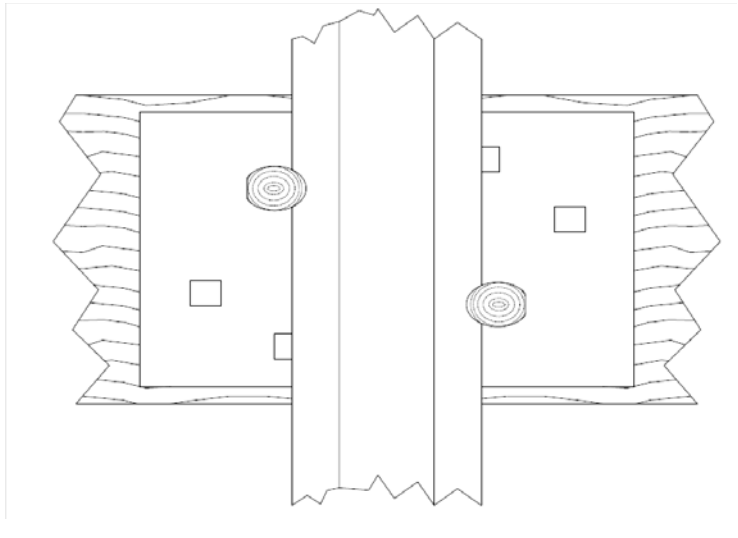

Figure 3-MM

A. Spiking Turnouts

When spiking turnouts, use spike pattern number 5 in Figure 3-LL on:

- All switch ties.
- 24 ties ahead of switch points.
- 24 ties behind the last long switch tie on the mainline side of the switch.
- Diverging side of the turnout from the last long switch tie through the reverse curve and for 24 ties onto tangent track.
- Fully spike all switch, frog, and guard rail plates in wood turnouts. Refer to Chapter 5 for more details.

B. Spiking Road Crossings

When the design of the road crossing material will not allow for installation of the standard spike pattern, spike ties directly under the crossing material as shown in Figure 3-NN to ensure that the crossing panel will set flat on the ties.

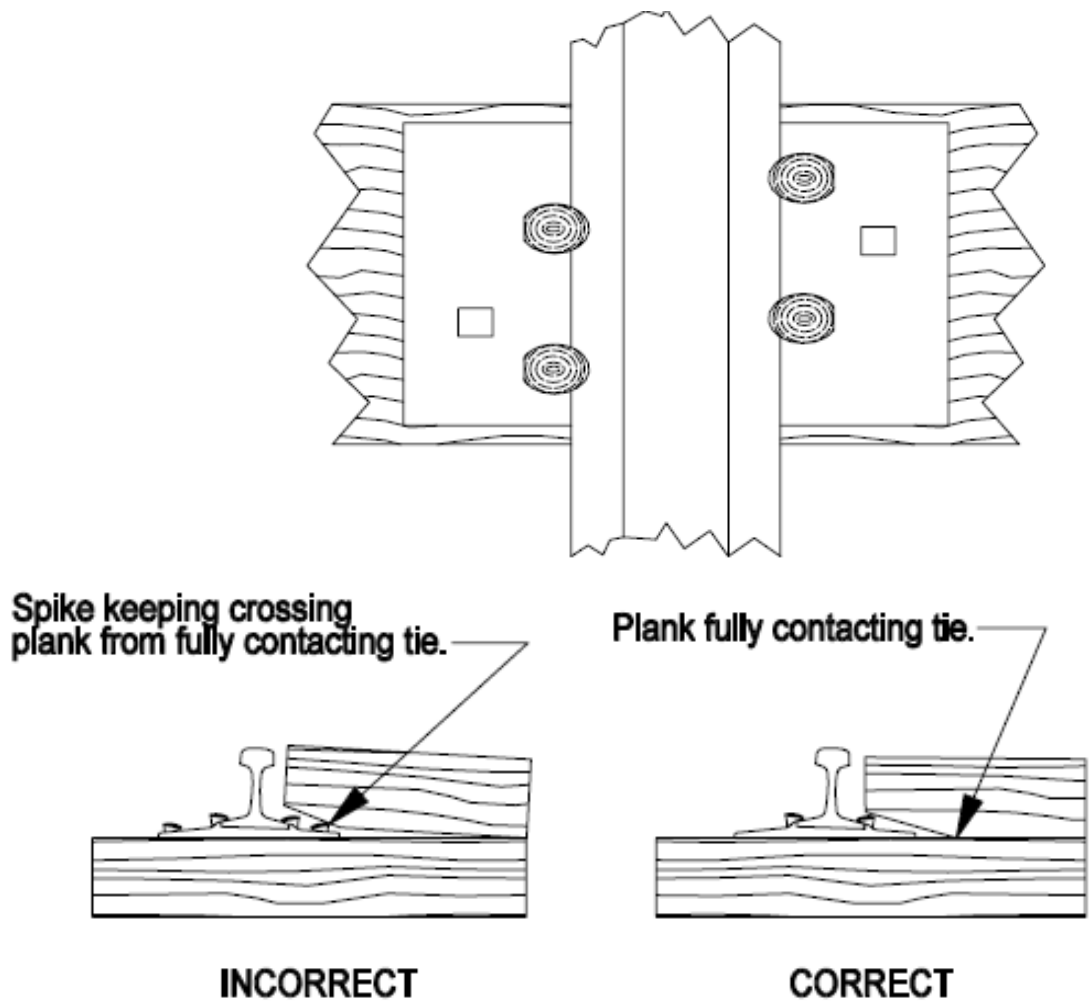

Figure 3-NN

3.5.4 Lag Screws

Lag screws are used in specific applications in curves, crossings, turnouts and crossovers to secure frogs, gage plates, guardrails and elastic fastener plates to ties. See Standard Drawing No. 130800.

Follow these requirements:

1. Ensure screws are inserted to a depth, where the bottom of the head of the lag screw is touching the top of the plate and securely fastens the plate to the tie.
2. Do not over tighten the lag screws.
3. Do not drive lag screws into the tie.
4. Use the proper size drill bit for the type of tie when drilling holes for lag screws as referred to in Table 3-BB.
5. Drill holes to a depth of 6 inches.
6. Do not drill through the bottom of the tie.
7. Do not place track spikes in round screw holes.

Hole diameters for 15/16-inch X 6 1/2-inch coach screws are as follows:	
Douglas Fir or other softwood	11/16 inches
Oak , hardwood or composite	3/4 inches
Azobe or other exotic hardwoods	13/16 inches

Table 3-BB

3.5.5 Evergrip Lag Screw

Evergrip lag screws in Figure 3-OO are used in specific applications in curves, crossings, turnouts and crossovers to secure frogs, gage plates, guardrails and elastic fastener plates to ties. Evergrip lag screws require fewer revolutions to fully tighten and have a higher holding power than the standard lag screw. See Standard Drawing No. 0454.

Follow the same requirements as in Section 3.5.4 Lag Screw.

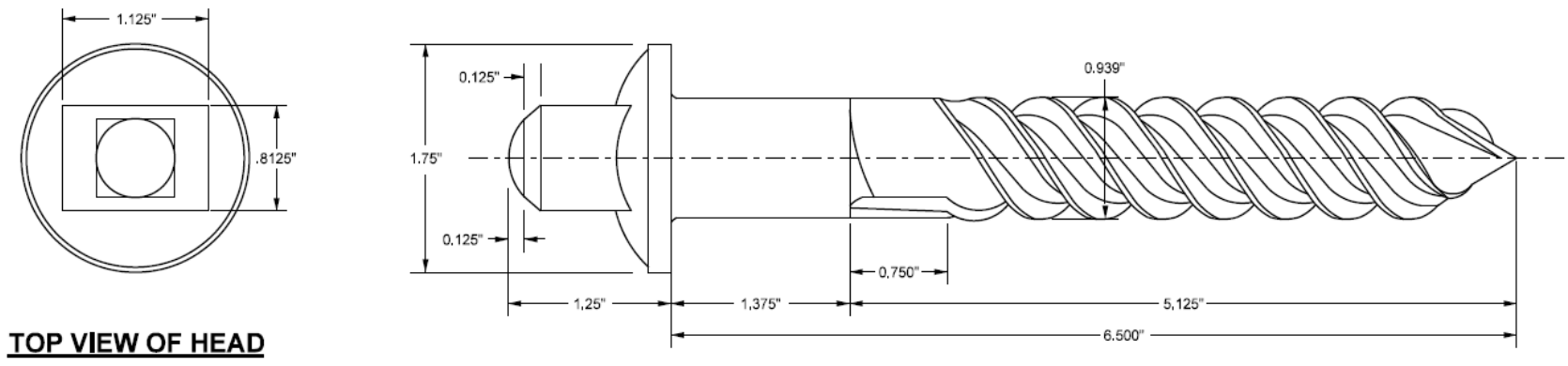

Figure 3-OO

3.6 Tie Maintenance

Follow these requirements to maintain ties:

1. Adze the plate-bearing surface of a wood tie to the minimum depth required to return the tie plate area to a level plane.
2. Plug holes in wood ties with tie plugs or other approved plugging material before re-installing spikes.
3. Repair rail-seat abrasion in concrete ties as outlined in section 3.2.1

3.6.1 Wood Tie Identification

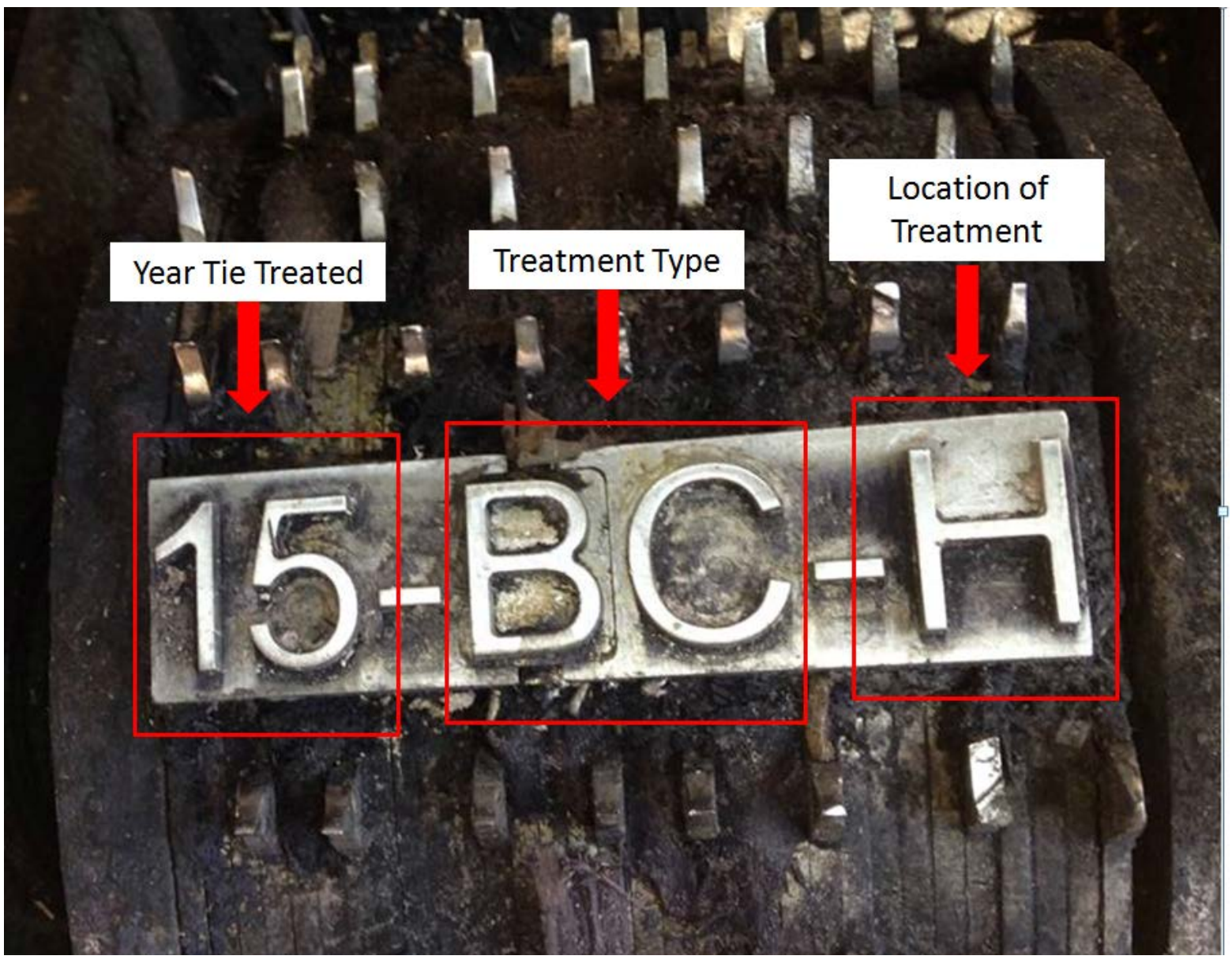

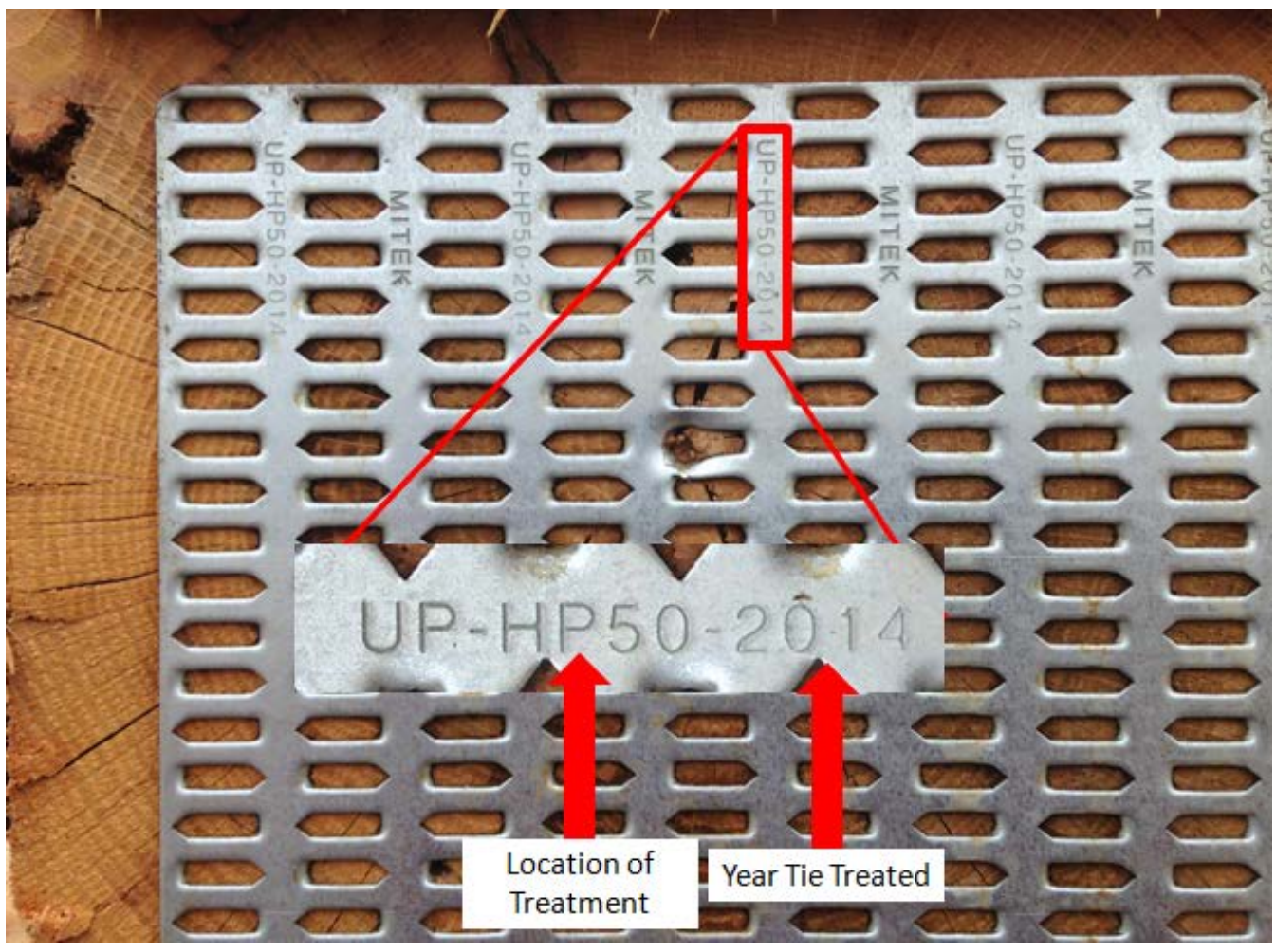

NOTES

4.0 RAIL AND JOINTS

4.1 General 4-4
4.2 Rail Identification 4-4
4.2.1 Rail Branding 4-4
4.2.2 Rail Stamping 4-4
4.2.3 Hydrogen Elimination 4-4
4.2.4 Rail Chemistry 4-5
4.2.5 Rail Sections 4-6
4.3 Rail Relays and Wear Limits 4-6
4.3.1 Classification and Use of Secondhand Rail 4-6
A. Manufacturing Process Restrictions 4-7
B. Acceptable Lengths 4-8
C. Wear Measurement References 4-8
D. Weld Plant Classification Parameters 4-8
E. Internal Defects 4-8
F. Drilled Stick Rail 4-8
G. Marking of Classified Rails 4-8
H. Shipment Requirements of Stick Rail 4-8
4.3.2 Out-of-Face Rail Relays 4-8
4.3.3 Curve Rail Relays 4-8
4.3.4 Curve Rail Wear Limits 4-9
4.3.5 Curve Rating Process 4-10
4.3.6 Derailment Relays 4-11
4.4 Rail Handling and Placement 4-11
4.4.1 Rail Handling 4-11
4.4.2 Rail Train Operations 4-11
4.4.3 Rail Placement 4-11
4.4.4 Rail Placement for Loading 4-12
4.5 CWR Rail Laying Temperatures 4-12
A. Neutral Temperature 4-12
B. Temperature Differential 4-12
4.5.1 Laying CWR 4-13
A. Monitor Rail Movement 4-13
B. Heat Rail 4-14
C. Rail Anchoring 4-15
4.5.2 CWR String Indication 4-15
4.5.3 Laying CWR to Proper Neutral Temperature - New Construction 4-15
4.5.4 Installing Maintenance CWR 4-15
4.5.5 Installation of Track Panels 4-16
4.5.6 Installation and Adjustment of Track Panels at Derailments 4-16
4.5.7 Laying Bolted Rail 4-17
4.6 Inside Guard Rails 4-17
4.7 Track Bolts 4-17
4.7.1 Track Bolt Sizes 4-17
4.7.2 Track Bolt Installation 4-17
4.8 Joint Bars 4-18
4.8.1 Installation of Joint Bars 4-18
4.9 Compromise Joint Bars 4-18
4.9.1 Offset (“Handed”) Joints 4-19
4.9.2 Step (“Non-Handed”) Joint Bars 4-19
4.9.3 Compromise/Transition Rails 4-19
A. 141/133# Compromise/Transition Rails 4-20
B. 136# to 115# Compromise/Transition Rails: 4-20
4.9.4 141# to 136# Transition Rails 4-21
4.10 Rail Joints 4-21
4.10.1 Permanent Joints 4-21
4.10.2 Joint Placement and Support 4-22
4.10.3 Rail Joint Stagger 4-22
4.10.4 Joint Counting Definitions 4-22
4.10.5 Pull-Aparts 4-23
4.10.6 Rail Drilling 4-23
4.10.7 Rail Mismatch 4-25
4.10.8 Rail Joint Gap 4-25
4.11 Insulated Joints 4-26
4.11.1 Types and Applications 4-26
A. Long Angle Projection (LAP) Insulated Joints 4-26

4.11.2 Poly-Coated and Fiberglass Insulated Joints 4-27
A. Poly-Coated Insulated Joints 4-27
B. Fiberglass Insulated Joints 4-27
4.11.3 I-Bond Installation 4-27
4.12 Cutting Rail 4-27
4.13 Field Welding (Thermite) 4-28
4.14 Reinforcing Weld Straps 4-30
4.15 In-Track Welding 4-30
4.16 Weld Tolerance Specifications 4-31
4.17 Rail Anchors 4-32
4.17.1 Anchor Types 4-33
4.17.2 Anchor Applications 4-33
4.17.3 Anchor Installation 4-34
4.17.4 Standard Box Pattern 4-34
4.17.5 Solid Box Pattern 4-35
4.17.6 Bridge Pattern 4-35
4.17.7 Turnout Pattern 4-36
4.17.8 Transition Pattern 4-37
4.17.9 Adjustment and Maintenance of Rail Anchor Patterns 4-37
4.18 Rail Defects 4-37
4.18.1 Defect Descriptions 4-37
A. Bolt Hole Break (BH) 4-37
B. Broken Base (BB) 4-37
C. Crushed Head or Flattened Rail (CH or FR) 4-38
D. Shell, Sliver Corrugation (SSC) and Battered Weld SSC (SSC-W) 4-38
E. Defective Weld (DPW, DFW, DIW, DWG) 4-39
F. Engine Burn Fracture (EBF) 4-40
G. Head-Web Separation (HW) 4-40
H. Horizontal Split Head (HSH) 4-40
I. Ordinary Break / Sudden Rupture (SR) 4-40
J. Piped Rail (PR) 4-41
K. Split Web (SW) 4-41
L. Transverse Defects 4-41
M. A Detail Fracture (DF) 4-41
N. Vertical Split Head (VSH) 4-42
O. Signal Bond Drilled (SBD) 4-42
P. Signal Bond Thermite (SBT) 4-42
Q. Signal Bond Electric (SBE) 4-42
R. Damaged Rail (DMG-R) 4-42
S. Critical Curve Wear (CCW) 4-43
4.18.2 Rail Testing Frequency 4-43
4.18.3 Defect Marking and Minimum Rail Removal 4-43
4.18.4 Non-Certified Rail Test 4-44
4.18.5 Rail Repair and Maintenance Plug Rail Replacement 4-45
A. Follow these requirements for defects that can be removed without a rail change. 4-45
B. Immediate Thermite welding 4-45
C. Cut and Drill for Joint Bar Application – Defect welding out planned 4-45
D. Welding out a defect where a single cut was made or joint bars only were applied. 4-45
E. Main Line Maintenance Replacement Rails 4-46
4.18.6 Remedial Action Required 4-47
4.18.7 Maintenance Replacement Rail Certification 4-55
A. Rails certified by field maintenance personnel 4-55
B. Maintenance rail is certified in the field at designated locations 4-56
C. Certified plug rail purchased from outside parties 4-56
D. Marking 4-56
E. New or Service Failed Rail 4-58
4.18.8 Relaying Second Hand Rail Cascaded via Rail Trains 4-58
4.18.9 Passing Trains over Broken Rails or Pull-Aparts 4-58
4.18.10 Temporary Repairs to Broken Rails and Pull-Aparts to Pass Trains 4-59
4.18.11 Broken Rail and Derailment Reporting 4-59
A. Service Failure Broken Rail Reporting 4-59
B. Broken Rail Derailment Reporting 4-60
4.19 Rail Lubrication 4-60
4.19.1 Methods of Lubrication 4-60
4.19.2 Lubricants 4-60

4.19.3 Locations for Rail Lubrication Application 4-60
4.19.4 Suspension of Lubrication for Program Maintenance and Grinding 4-61
4.20 Rail Grinding 4-61
4.20.1 General 4-61
4.20.2 Corrective, Maintenance, and Preventive Grinding 4-61
4.20.3 When to Grind and Type of Grinding 4-62
4.20.4 Grinding Requirements 4-62
4.20.5 Classification of Rail Condition for Grinding 4-62
4.20.6 Preparation 4-62
4.20.7 Grinding on Bridges 4-62
4.20.8 Service Unit Requirements for Assisting Production Rail Grinding 4-63
4.20.9 Service Unit Requirements for Assisting Switch Rail Grinding 4-63

4.0 RAIL AND JOINTS

4.1 General

Rail is a rolled piece of steel laid parallel on ties to form a track on which trains operate. Rail is designed to distribute the load of the rolling stock to the ties and the roadbed.

4.2 Rail Identification

Rail branding and stamping identifies rail using a unique identification system. Rail manufacturers form the markings into the rail during the manufacturing process.

Check rail branding and stamping to determine the type of rail before welding.

4.2.1 Rail Branding

Branding appears as raised lettering on the rail web and identifies the rail weight and section, manufacturer name, and the year and month rolled. See Figure 4-A.

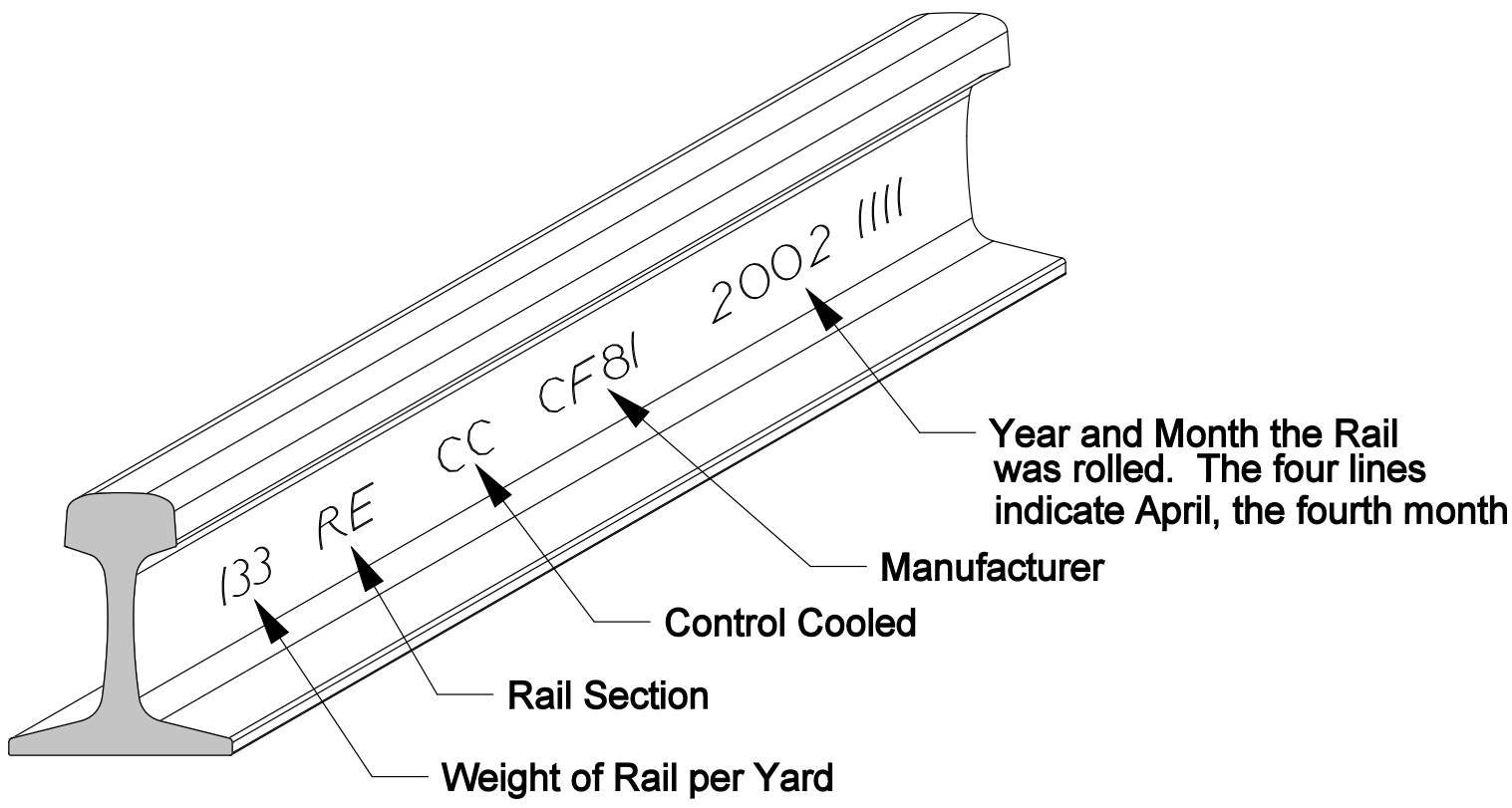

Figure 4-A

4.2.2 Rail Stamping

Rail stampings are imprinted characters on the web opposite the branding side. See Figure 4-B.

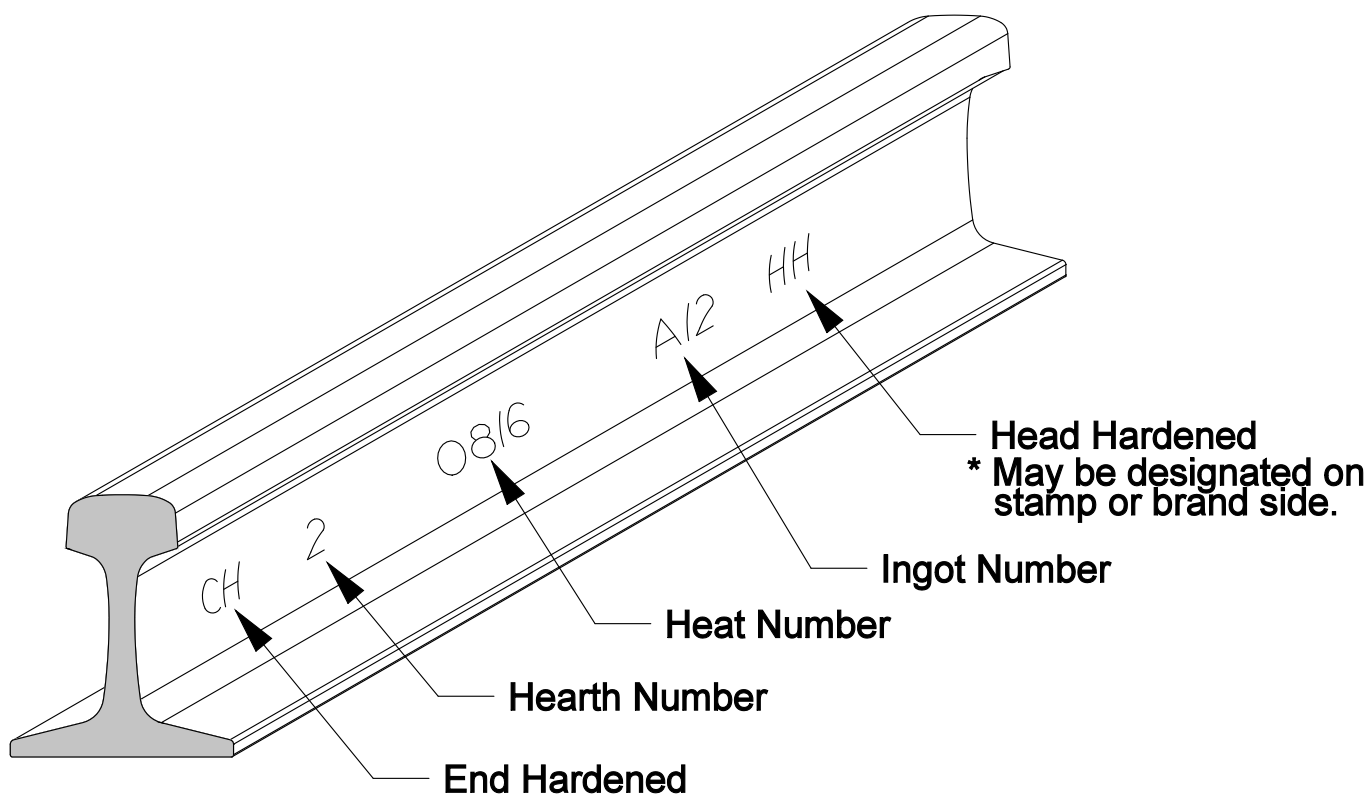

Figure 4-B

4.2.3 Hydrogen Elimination

During the rail manufacturing process, hydrogen is removed to reduce internal rail defects. Table 4-A identifies the process used during hydrogen elimination.

Hydrogen Elimination Processes	
Branding	**Process**
CC	Control cooled
CH	Control cooled and end hardened
BC	Control cooled blooms
VT	Vacuum treated
OP	Other practices

Table 4-A

4.2.4 Rail Chemistry

Rail chemistry determines specific maintenance and welding requirements. Use Table 4-B and Table 4-C to determine whether rail is alloy or non-alloy.

Alloy Rail		
Manufacturer Branding	**Stamping**	**Chemistry/Type**
CF&I	CROMO	Chrome/Molybdenum
CF&I	HI SI	High Silicon
WHEELING PITT	WR	Chrome/Silicon
KLOCKNER-AL	Blank	Chrome/Vanadium
KRUPP-AL	Blank	Chrome/Vanadium
THYSSEN-AL	Blank	Chrome/Vanadium
ATH	Blank	Chrome/Vanadium

Table 4-B

Non-Alloy Rail		
Manufacturer Branding	**Stamping**	**Chemistry/Type**
BETHLEHEM STEEL	FT	Fully Heat Treated
BETHLEHEM STEEL	HH	Head Hardened
BETHLEHEM STEEL	MH	Standard Strength
BRITISH STEEL	FT	Head Hardened
CF&I (HH on glued tag)	IS	Head Hardened
CF&I	HH	Head Hardened
CF&I	DH390	Head Hardened
CF&I	IS	Standard Strength
CF&I	SS	Standard Strength
COLORADO	Blank	Standard Strength
HAY (HAYANGE)	Blank	Head Hardened
ILLINOIS	Blank	Standard Strength
INLAND	Blank	Standard Strength
ISG (INTERNATIONAL STEEL GROUP)	Blank	Standard Strength
ISG HH (INTL STEEL GROUP)	Blank	Head Hardened
KLOCKNER	Blank	Standard Strength
KRUPP	Blank	Standard Strength
MT (MITTAL USA)	Blank	Standard Strength
MT HH (MITTAL USA)	Blank or IS HH	Head Hardened
MMRA	Blank	Standard Strength
MMRA HH	Blank	Head Hardened
NIPPON	DH340	Head Hardened
NIPPON	DH370	Head Hardened
NIPPON	HE370	Head Hardened
NIPPON	HE400	Head Hardened
NIPPON	HEX	Head Hardened
NKK	NHH	Head Hardened
NKK	SP	Head Hardened
NKK HH	Blank	Head Hardened
PST (PENNSYLVANIA STEEL TECH)	Blank	Standard Strength
PST HH (PENNSYLVANIA STEEL TECH)	Blank	Head Hardened
RMSM	DH 390	Head Hardened
RMSM or ERMS	SS	Standard Strength
RMSM or ERMS	IS HH (IHHS)	Head Hardened
RMSM	HCP	Head Hardened
RMSM or ERMS	OCP	Head Hardened
RMSM or ERMS	Blank	Standard Strength
SDI (STEEL DYNAMICS INC.)	Blank	Standard Strength
TENNESSEE	Blank	Standard Strength
THYSSEN	HH	Head Hardened
THYSSEN	Blank	Standard Strength
TZ (CZECH)	SS	Standard Strength
WP (WHEELING PITT)	MH	Standard Strength

Table 4-C

4.2.5 Rail Sections

Table 4-D lists some of the more common rail sections used in the construction of the railroads throughout their history. Though most of the sections are no longer used, the table can be used as a reference for rail identification and a guide for rail end drilling in repair situations.

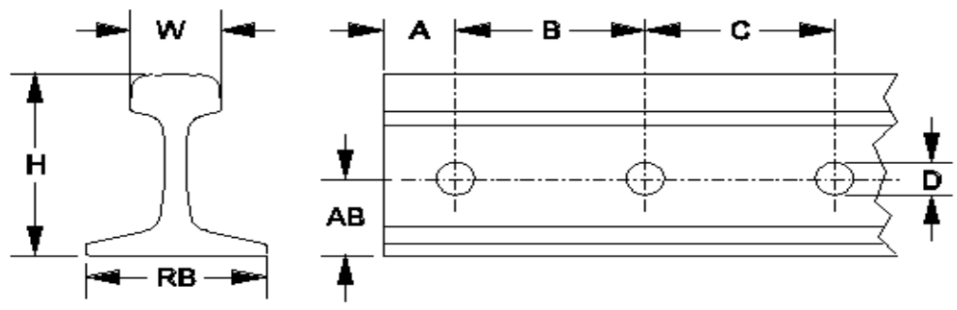

Common Rail Section Information

Rail Weight (lbs/yd)	Rail Section Type	"H" Rail Height (inches)	"RB" Rail Base (inches)	"W" Head Width (inches)	Rail End Drilling "A-B-C" (inches)	"D" Hole Dia. (inches)	"AB" Above Base (inches)
75	40 (ASCE)	4 13/16	5	2 15/32	2 7/16 - 5 (UP)	1 1/8	2 15/128
					3 - 6 (WP)		
					2 1/2 - 4 (MP)		
					2 29/32 - 6 (MP, M&I)		
	CS	5	5	2 9/16	2 5/8 - 5 1/2 (UP)	1 1/8	2 1/4
					2 11/16 - 5 1/8 (WP & SP)	1 1/32	
85	40 (ACSE)	5 3/16	5 3/16	2 9/16	2 5/8 - 5 1/2 (UP)	1 1/8	2 17/64
					2 29/32 - 6 (CNW)		
					2 13/16 - 5 (WP)		
					2 15/16 - 6 (MP)	1	
	50	5 7/32	5 1/4	2 15/32	2 13/32 - 5 (MP)	1 1/8	2 21/128
90	RA (ARA-A)	5 5/8	5 1/8	2 9/16	2 5/8 - 5 1/2 (UP)	1 1/8	2 19/32
					2 13/32 - 5 (MP, WP)	1 1/16	
					2 11/16 - 5 1/2 (WP, SP)	1 1/32	
					2 29/32 - 6 (MP, CNW)	1 1/8	2 37/64
	CS	5 3/4	5 3/8	2 3/4	2 5/8 - 5 1/2	1 1/8	2 9/16
	RA Headfree	2 25/32	5 1/8	2 9/16	2 29/32 - 6	1 1/8	2 37/64
100	25 RE	6	5 3/8	2 11/16	2 5/8 - 5 1/2 (UP)	1 1/4	2 1/2
					2 11/16 - 5 1/2 (WP)		
	20 RA	6	5 1/2	2 3/4	2 13/32 - 5 (MP)	1 1/8	2 3/4
					2 1/2 - 6 1/2 (CNW)	1 3/16	
110	RE	6 1/4	5 1/2	2 25/32	2 11/16 - 5 1/2 (UP, SP)	1 1/4	2 5/8
					2 29/32 - 6 (MP)	1 1/8	
					2 23/32 - 5 1/2 (CNW)	1 1/4	2 13/16
	RE Headfree	6 7/16	5 1/2	2 11/16	2 29/32 - 6 (MP)	1 1/8	2 5/8
112	20 RE	6 5/8	5 1/2	2 23/32	2 1/2 - 6 1/2	1 3/16	2 7/8
					2 1/2 - 6 1/2 (SP)	1 1/4	
	RE Headfree	6 3/4	5 1/2	2 11/16	2 1/2 - 6 1/2 (MP)	1 1/8	2 7/8
113	Headfree	6 13/16	5 1/2	2 11/16	2 1/2 - 6 1/2 (SP)	1 1/4	2 7/8
115	25 RE	6 5/8	5 1/2	2 23/32	3 1/2 - 6 - 6	1 1/8	2 7/8
					2 1/2 - 6 1/2 - 6 1/2 (WP, SP)	1 1/4	
119	RE	6 13/16	5 1/2	2 21/32	3 1/2 - 6 - 6	1 1/8	2 7/8
					2 1/2 - 6 1/2 - 6 1/2 (WP, SP)	1 1/4	
130	PS	6 5/8	5 1/2	3	2 11/16 - 5 1/2 - 5 1/2 (SP)	1 1/4	2 3/4
	RE	6 3/4	6	2 15/16	2 11/16 - 5 1/2 (UP)	1 1/4	2 3/4
131	RE	7 1/8	6	3	2 1/2 - 6 1/2 - 6 1/2 (MP)	1 1/8	3 23/32
					2 15/16 - 6 1/2 - 6 1/2 (UP)		
	28 RE	7 1/8	6	3	2 23/32 - 6 - 7	1 1/8	3 1/4
132	25 RE	7 1/8	6	3	3 1/2 - 6 - 6 (MP)	1 1/8	3 3/32
					3 1/2 - 6 - 6 (UP)		
					2 15/16 - 6 - 6 (WP)		
	Headfree	7 5/16	6	2 31/32	2 1/2 - 6 1/2 - 6 1/2 (SP)	1 1/8	3 9/32
133	0 RE	7 1/16	6	3	3 1/2 - 6 - 6	1 1/8	3
136	0 RE	7 5/16	6	2 15/16	3 1/2 - 6 - 6	1 1/8	3 3/32
					2 15/16 - 6 - 6 (WP)		
	CF&I	7 5/16	6	2 15/16	2 1/2 - 6 1/2 - 6 1/2 (SP)	1 1/8	3 3/32
140	31 RE	7 5/16	6	3	6 - 3 - 2 23/32	1 1/8	3
141	AB	7 7/16	6	3 1/16	3 1/2 - 6 - 6	1 1/4	3 3/32

Table 4-D

4.3 Rail Relays and Wear Limits

Out-of-face rail and curve relay programs are based on accumulated gross tonnage, defect rates, and rail head wear.

4.3.1 Classification and Use of Secondhand Rail

The specification and inspection parameters below detail the guidelines for the secondhand rail standards. These standards will be used to grade secondhand rail for recovery for re-use, or purchase from outside sources. The instructions outlined below are designed to provide consistent evaluation of secondhand rail throughout the system so that each rail is properly marked for its identity and use. Refer to Figure 4-C and Table 4-E.

Class 1-Principal use is for main line replacement rails, rail relays on lines carrying between 5 and 20 MGT per year and other areas requiring long term serviceable secondhand rail.

Class 2-Principal use is for secondary main line or siding replacement rails, rail relays of lines carrying less than 5 MGT per year, yard or industry tracks and other areas of low track speeds or demands on serviceable secondhand rail.

Class 3-Principal use is for yard or industry tracks and other areas of temporary service or low demands on quantity of secondhand rail.

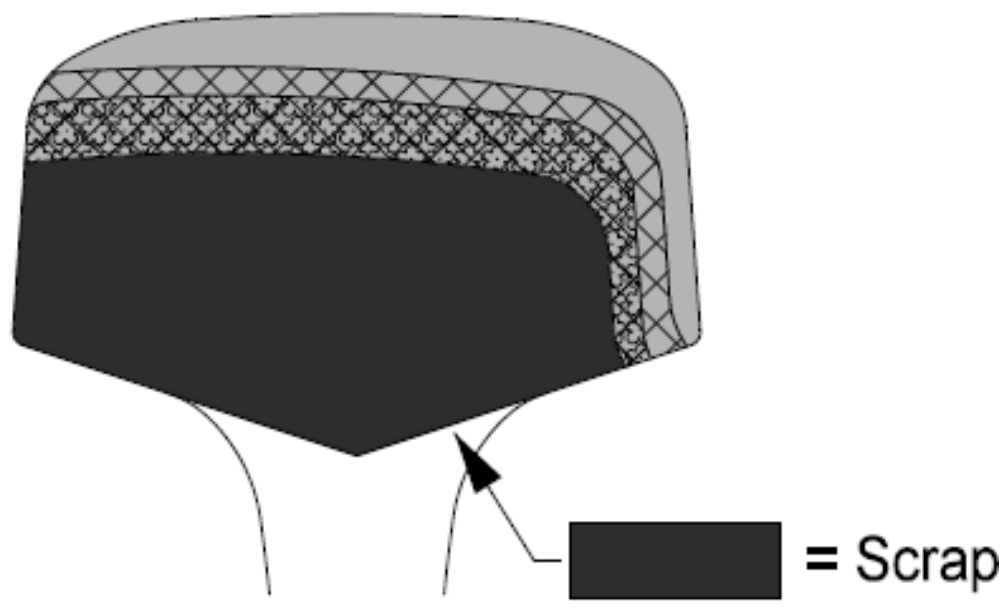

133 WEAR COMPARISON BETWEEN CLASS 1,2 AND 3

	Allowable Top Wear	Allowable Side Wear
CLASS 1	1/4"	1/8"
CLASS 2	3/8"	1/4"
CLASS 3	5/8"	3/8"

Figure 4-C

Class 1		
Rail Weight	**Max. Vert. Wear**	**Max. Hor. Wear**
141	5/16"	1/8"
133-136	1/4"	1/8"
131-132	3/16"	1/8"
119	5/32"	1/16"
112-115	1/8"	1/16"
Corrugation up to .010 allowed		
Class 2		
Rail Weight	**Max. Vert. Wear**	**Max. Hor. Wear**
141	7/16"	1/4"
133-136	3/8"	1/4"
131-132	1/4"	1/4"
119	1/4"	1/8"
112-115	3/16"	1/8"
Two dime sized engine burns per 39' corrugation up to .020 1/4" field size lip allowed		
Class 3		
Rail Weight	**Max. Vert. Wear**	**Max. Hor. Wear**
141	11/16"	3/8"
133-136	5/8"	3/8"
131-132	3/8"	3/8"
119	3/8"	5/16"
112-115	1/4"	5/16"
Three quarter sized engine burns per 39', corrugations and light spalling up to 0.030”, pitting and oxidation up to 0.060” and 1/4" field side lip allowed.		

Table 4-E

A. Manufacturing Process Restrictions

A-rails and non-controlled cooled rails are to be used in yard, back or industry tracks only. These rails must be separated in inventory upon inspection and identification. Non controlled cooled rails (pre 1937) are not to be used in welded strings. If rail cannot be identified because of corrosion, rust scaling or otherwise, assume that the rail is an "A-rail" and inventory as such. Under current policy, no A-rails or non-controlled cooled rails can be purchased.

A-rail - Rails rolled from the top or "first rail" of the ingot casting process (past technology). This rail is identified with an "A" stamped on the heat number side between the heat and ingot/bloom numbers. This rail is prone to have the majority of defects in rails manufactured by the ingot process. A-rail is limited Class 3 Use.

The following rail chemistries must not be reinstalled on any track unless directed by the Chief Engineer:

"Algoma, British, Workington, Vilru, or Bethlehem FT" manufactured rails.

"Klockner, Thyssen, Krupp and CFI" chrome rails or any other manufactured chrome alloy rails.

B. Acceptable Lengths

The minimum acceptable length for secondhand rail classified at the weld plant is 25 feet. Minimum length for a plug rail is 15 feet.

C. Wear Measurement References

Vertical head measurement will be taken from the center of the rail's head (+/- 3/8") to its base plane (excluding base pitting). See Section 4.3.4 Curve Rail Wear Limits. Determine gage face wear loss by measuring the width of the railhead at a point 5/8" below the top surface of the railhead.

D. Weld Plant Classification Parameters

After cropping, no bolt holes can remain, no bond wires or bond pin holes are allowed within 18" from ends of the rails. Rail ends must be inspected for injurious pipe or segregation. No negative camber in the rails is allowed, a maximum of 3/4" uniform side sweep in 39 feet is permissible. Twisted rails (>0.060" on ends), or bent rails will be scrapped. Rail ends will be straight with a maximum 0.030" concave hook and no droop allowed, as measured with a 36" straightedge and taper gage.

E. Internal Defects

Rail subject to these specifications shall be free of known internal defects. All SH rails not generated by UPRR will be ultrasonically tested and free of any defects in excess of the following reflector set up criterion. Head - 1/16" flat bottom hole, Web - 3/32" flat bottom hole, Base - 1/16" deep by 1/4" long by 1/16" wide slot.

F. Drilled Stick Rail

When secondhand drilled rails are retained or purchased, the above requirements and parameters apply with the following additions. No extra bolt holes are allowed and end batter shall not exceed 1/16" on Class 1 rail or 1/8" on Classes 2 and 3 rails. Bolt holes shall be free of defects and fins and shall not be elongated in excess of 1/16". Bolt holes to be beveled per Standard Drawing No. 0745. To de-burr and bevel holes drilled in the field, use abrasive stone item number 411-3867.

G. Marking of Classified Rails

After cropping and classification, rails will be center marked to facilitate handling. Class number and weight of rail will be marked on top of the head on one end. In addition, A-rails and non-control-cooled rails will be marked with an A (i.e, #3 115RE A) and non-control-cooled rails marked NC. Marking will be done with high quality white paint or other approved method, with the objective of long term legibility. Drilled rails will have their pattern identified such as: #2 133RE 6H UP. This example is a Class 2 133RE rail drilled 3 holes both ends at 3 1/2 x 6 x 6 which is the UPRR standard bolt hole spacing.

H. Shipment Requirements of Stick Rail

All carloads of rail received at UPRR facilities, must be loaded per 'AAR Section 2, Rules Governing Loading of Steel Products Including Pipe on Open Top Cars' or per individual special agreements. Under no circumstances will rail be received loaded "loose fill", rail must be loaded on its base (head up) on spaced wood slats to prevent shifting, damage, etc.

4.3.2 Out-of-Face Rail Relays

For a list of guidelines of approved rail sections for out-of-face rail relay programs, refer to the Union Pacific Standard Rail Sections map. See Maps in the Engineering Bulletin Board on the Engineering Website.

Follow these requirements:

1. When second-hand rail is unavailable, a different rail size or kind may be substituted.
2. Under no circumstances will rail, with a roll date older than 1975, be installed in any main line application unless approved by a Chief Engineer.
3. During concrete tie renewals (TRT), replace existing rail when:
   - The rail section is not 133 lb., 136 lb. or 141 lb. head hardened.
   - Vertical head loss is 3/8 inch or more.
   - Rail defect rate meets or exceeds replacement logic.

4.3.3 Curve Rail Relays

Table 4-F lists guidelines for curve rail relay programs.

Curve Rail Relay Guidelines		
Territory	**New Intermediate Strength CWR**	**New Head Hardened CWR**
Concrete Tie Track	None	All curves
Wood Tie Track Over 50 MGT	None	All curves
Wood Tie Track 10 to 50 MGT	All curves up to and including 1 degree 30 minutes	All curves greater than 1 degree 30 minutes

Table 4-F

Follow these guidelines:

1. Consider relaying alloy rail curves prior to reaching established rail wear limits.
2. Consider laying short tangents between curves with the same rail type as the adjacent curve.
3. Take field measurements to determine the exact length of rail required for curve relays.
4. Mark the beginning and ending points of curve rail measurements on the tie plate or rail.

4.3.4 Curve Rail Wear Limits

Rail wears both horizontally and vertically as shown in Figure 4-D.

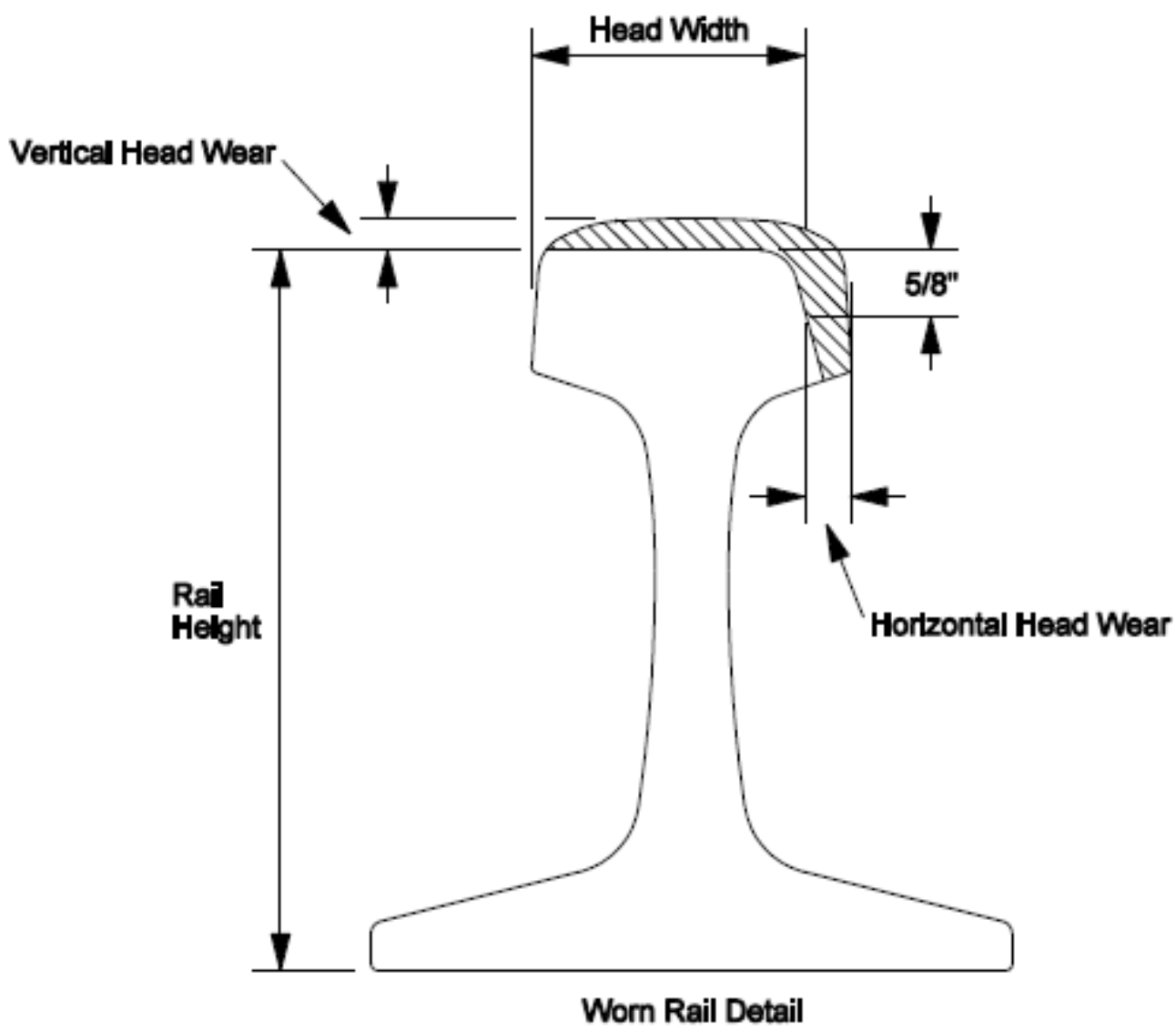

Figure 4-D

Follow these requirements to measure rail wear:

1. Measure head width at a point 5/8 inch below the top of the head.
2. Measure rail at regular intervals for excessive wear.
3. Take measurements at three locations in curves to avoid isolated readings.
4. For the standard rail measurement tool, order store stock item number 410-5462 for 5 ½ and 6 inch base rail.
5. Follow the guidelines for rail relays shown in the tables contained in Table 4-G.

NOTE: Curves having 5/8 inch Gage Face wear or greater will be considered for replacement on the following subdivisions: Ayer, Cascade, Canyon, Caliente, Huntington, Moffat Tunnel, Mojave and Roseville. This only applies to curves that are greater than 3 degrees of curvature.

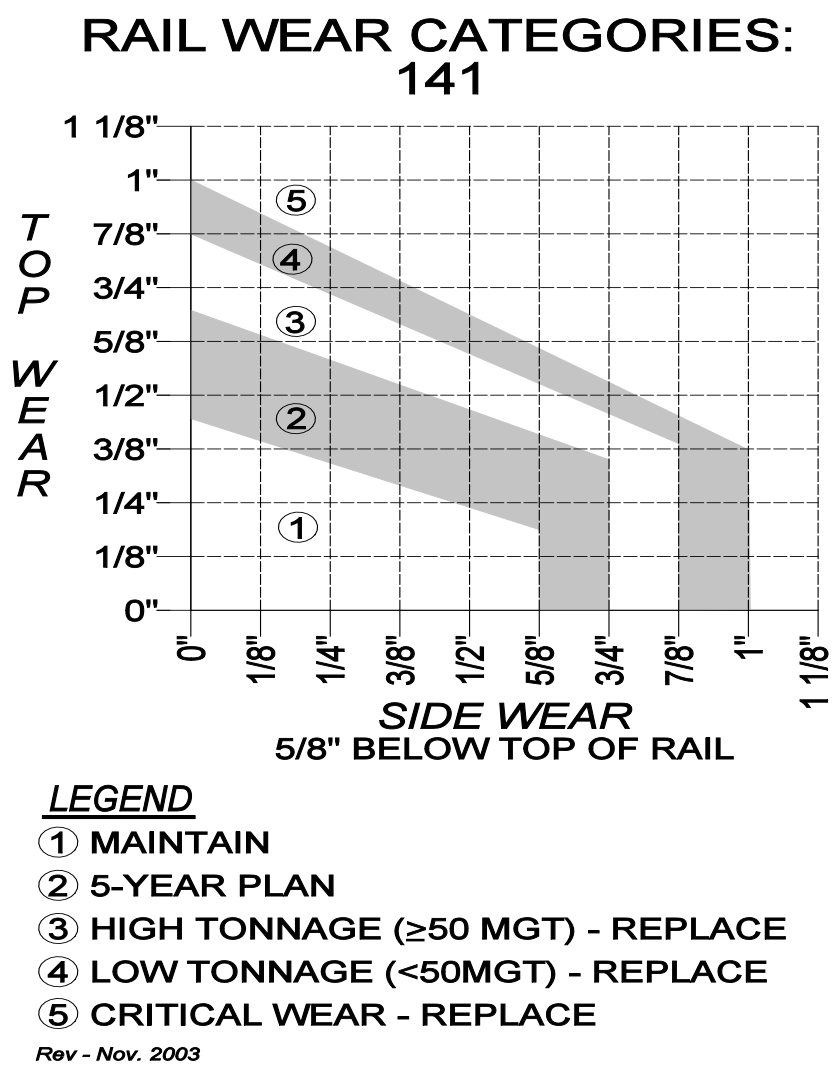

Table 4-G

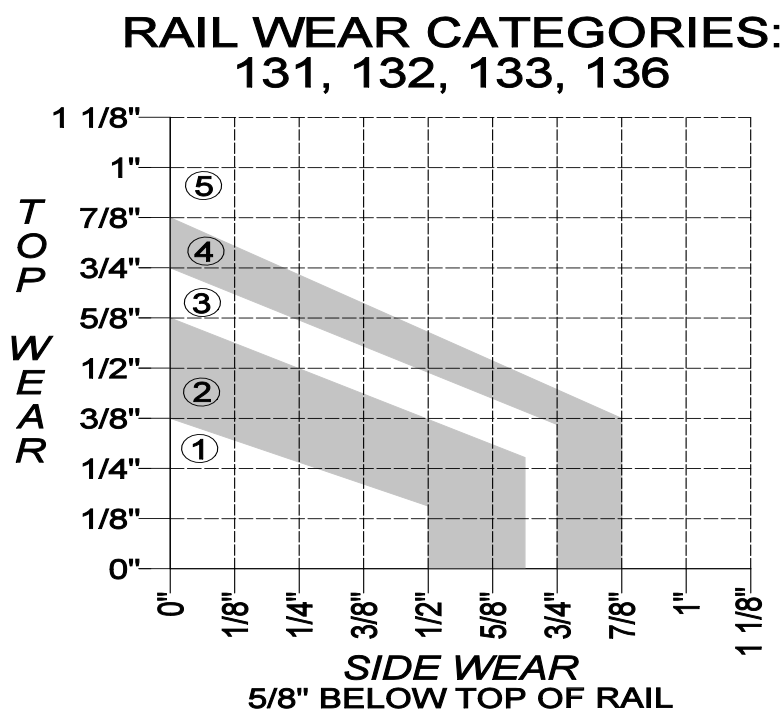

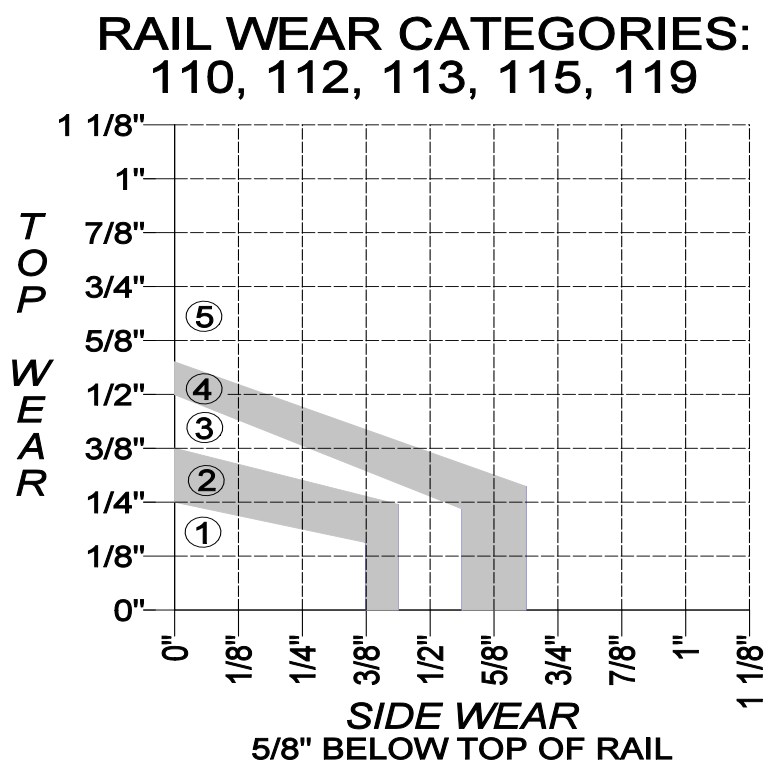

Table 4-G (cont.)

5. Do not transpose rail when:
   - Head flow lip on the field side of the low rail is greater than 1/8 inch.
   - Shelling is evident.
   - The rail base is less than 6 inches.
   - Alloy rail is present.

4.3.5 Curve Rating Process

The purposes of this document is to standardized procedures for measuring rail wear and help you understand the rail rating process for curve relay. The process is multilayered and requires input from Service Unit Managers, Track Inspectors and Foremen as well as Engineering, Central Function personnel and rail wear measuring capability.

To begin the process, there are two curve categories used in this system: Candidate and Non-Candidate Curves.

- Candidate curves are generated using UP's Evaluation Car rail wear data for curves which have not been recently relayed.
- The second is when a Service Unit requests inspection of curves which may not be on the candidate list due to wear, surface conditions etc. Curve rail is replaced due to rail wear or rail conditions which may adversely affect train ride, dynamics or track maintenance. Additional curve inspections are requested using the Curve Project Management database. The database is located on the Employee website, Departments > Engineering > Capital Project Management > Proj Ident (tab).
- When a curve meets or closely approaches rail change out criteria per rail wear category charts (tonnage and wear level), they should be candidates for the following year's inspection. Refer to 4.3.4, Curve Rail Wear Limits, Table 4-G. When not included in the candidate curve list, these curves should be included in the Service Unit requests.
- All added curves require field inspection and all measurements must be entered into the Curve Management Database.

Field Inspection Process

When your position requires you to inspect rail wear on curves, the following procedures are used to rate curves for annual rail relay projects.

- Review the Curve Report for the curve(s) to be inspected. The report is available in: TMP > Reports > Design Curve Report
- All curves should be inspected and measured on a regular basis for excessive wear.
  1. Using ascending mile poles as your direction, a minimum of three locations must be inspected in each curve. The beginning, middle (full body) and the leaving end.
     - Mark each location on the rail, between tie cribs.
     - Paint adjacent tie plates with "Optic Green" paint to enable consistent subsequent measurements.
  2. Locate and record rail section / rail weight and branding to enable correct measurements. Refer to 4.2.1, Rail Branding
  3. Measure rail wear, both vertical and gauge face, using a standard Winchester Wear Gauge, UPRR Item # 410-54620.
     - A full video with instructions about the curve rail inspection process and how to utilize this wear gauge is available on the UP website. From the Employee site go to: Departments > Engineering > Capital Project Management > Proj Ident (tab), Then select "Rail" near the center. In the section labeled Service Unit Curve Unit Management select the Curve Inspection Video resolution of your choice.
- Inspection and measurements are documented using the Curve Inspection Field form at the same website.
- Measurements are plotted and rated using rail wear category charts in section 4.3.4, Curve Rail Wear Limits, using Table 4-G **or** using Excel, Curve Wear Charts located at the above website.
- In addition to wear measurements, look for poor surface conditions such as wheel burns, rail head defects, Shelling, Sliver, Corrugation (SSC), Flattened Rail (FR), Crushed Head (CH) or a large number of joints or welds which may indicate previous rail problems / change outs.
- Curve measurements must be entered into the curve Project Management Database prior to the curve raters arrival.
- Be prepared upon the arrival of the curve rater in order to expedite the inspection process and ensure overall quality of the curve rating process.

4.3.6 Derailment Relays

Follow these requirements:

1. After installing track panels at derailments in CWR territory, arrange to remove the jointed rail as soon as possible.
2. In wood tie track, when more than five track panels are laid with square joints, limit the maximum allowable speed over the track to 40 MPH until the joints are staggered.
3. In concrete tie track, when more than five track panels are laid with square joints, limit the maximum allowable speed over the track to 25 MPH until joints are staggered and then 40 MPH until CWR is re-laid.
4. Field managers must notify Engineering Planning of derailment locations requiring CWR lengths of 720 linear feet or more.

4.4 Rail Handling and Placement

4.4.1 Rail Handling

When lifting rail:

1. Center mark rail before lifting to balance the load.
2. Use approved rail tongs or grapple buckets when handling rail 60 feet or less.
3. Use a spreader bar when handling rail more than 60 feet.

4.4.2 Rail Train Operations

Employees shall be trained on the safe and proper procedures for loading and unloading of rail trains. This training can be accomplished by either viewing a video (E-248-02) or reviewing written instructions. These instructions can be found on the intranet at: http://home.www.uprr.com/emp/engineering/bus_area_sys_gangs.cfm

4.4.3 Rail Placement

When unloading rail trains and placing rail in field locations for installation, follow these requirements:

1. Place rail as close as possible to the site where it will be installed.
2. Place rail where it will not contact other rail in the track.
3. When possible, place rail at the toe of ballast no closer than 6' from the center line of the track. Any rail placed on ties shall be secured by restraining the rail from movement. For example, spikes may be used to restrain the rail from movement. In addition, a tie plate or equivalent is needed at the rail end to create a ramp preventing any dragging equipment from picking the rail. Rest the plate upside down on an angle

to the rail end and spike it to the nearest tie. If rail is not properly secured, place a 25 MPH slow order on the track. Under no circumstances shall rail be left in the "area of no obstruction" as seen in Figure 4-E-1.

4. After removing unloading straps, mismatch rail ends by placing wooden blocks or other suitable material between the rail ends.
5. Point rail ends on all rail strings away from the track toward the field.
6. Securely fasten and support rail across bridges.
7. Cut only when necessary during rail train CWR unloading operations.
8. Bury rail below the road surface when unloaded through grade crossings.
9. Place rail in ditches cut by shoulder plow.
10. Place rail out of the way in walking areas such as yards and other switch locations.
11. Have the train dispatcher issue Form C, "Bad Footing Order," if necessary.

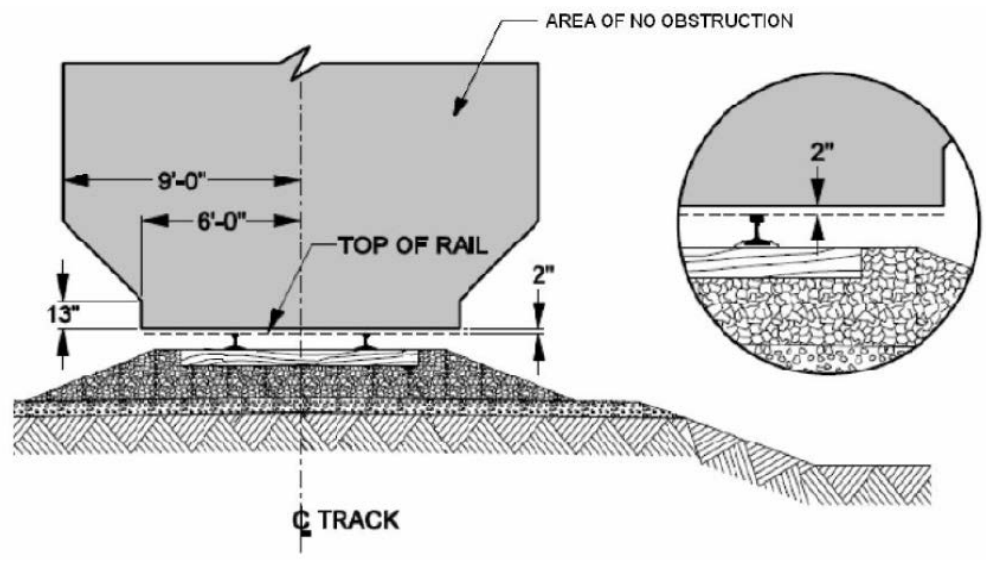

Figure 4-E-1

4.4.4 Rail Placement for Loading

When loading rail trains and placing rail for pick-up, follow these requirements:

1. Place rail where it will not contact other rail in the track.
2. Place rail a minimum of 6' from the center line of the track when possible.
3. Any rail placed on ties shall be secured by restraining the rail from movement. For example, spikes may be used to restrain the rail from movement. If rail is not properly secured, place a 25 MPH slow order on the track. Under no circumstances shall rail be left in the "area of no obstruction" as seen in Figure 4-E-2.
4. Mismatch rail ends by placing wooden blocks or other suitable material between the rail ends.
5. Point one end of pick-up rail strings away from track toward the field.
6. Place rail out of the way in walking areas such as yards and other switch locations.

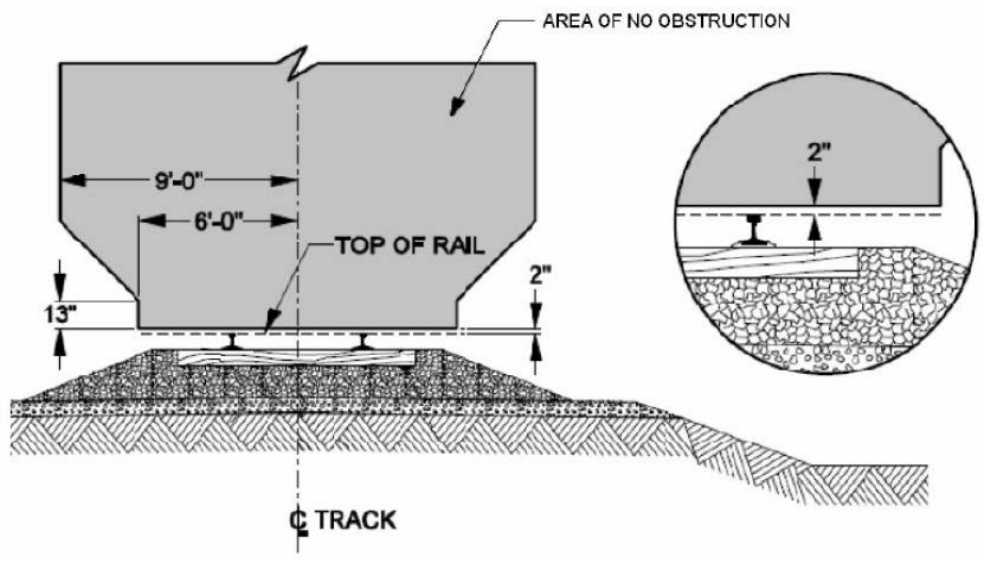

Figure 4-E-2

4.5 CWR Rail Laying Temperatures

Rail length that exceeds 400 feet is considered CWR. Rail installed as CWR remains CWR, regardless of whether a joint or plug is installed into the rail at a later time.

Temperature variations significantly affect rail length. Rail expands (lengthens) when heated and contracts (shortens) when cooled.

A. Neutral Temperature

The neutral temperature is the temperature at which a rail is neither in tension nor compression.

Designated rail laying temperatures have been established to provide a **high** neutral temperature to prevent track buckling. Lay or adjust CWR to the designated rail laying temperatures shown in Table 7-J. These temperatures have been adjusted for geographic location.

B. Temperature Differential

The **difference** between the **designated** rail laying temperature and the actual rail temperature taken at the time of installation is called the temperature differential. CWR laying and adjusting procedures have been established to correct this temperature difference.

Use this formula to calculate the length of unrestrained rail movement due to changes in temperature:

Rail Movement (inches) =

Rail Length (inches) × Temperature Differential (degrees F) × 0.0000067

4.5.1 Laying CWR

Follow these general requirements when laying CWR:

- Refer to the current Table 7-J for the neutral rail laying temperature requirements in your area. (Chapter 7 contains rail laying temperatures for each subdivision).
- Follow all rail installation and documentation guidelines.
- Record the rail temperature and the expansion required before making adjustments.
- Record the rail laying temperature and expansion on approved forms. (Go to the Engineering Website at: Engineering> Track Programs> System Gangs> Rail Gangs> Engineering Heat Control Record> Add New Date> Add New Entry).
- Rail adjustment is not required when the actual rail temperature exceeds the designated rail laying temperature.
- Rail heaters, rail expanders or in-track welders may be used to adjust the rail to the correct length.
- If rail is laid at a temperature more than 40° F below the designated rail laying temperature, rail must be adjusted or a speed restriction of 40 mph must be placed prior to rail temperature above designated rail laying temperature.

A. Monitor Rail Movement

When laying CWR, monitor rail movement as follows:

1. Make reference marks (Figure 4-F) on the rail, plate and tie that is to be left in track before rail is cut. Prior to heating of new rail, ensure that the reference mark on the existing rail is where it was before the cut. If pull back is encountered, heat rail 200 feet prior to original reference mark bringing the mark back to original location. Adjust anchors accordingly. This procedure is also required at tie-in location. Place marks at tie-in location before disturbing rail within 720 feet.

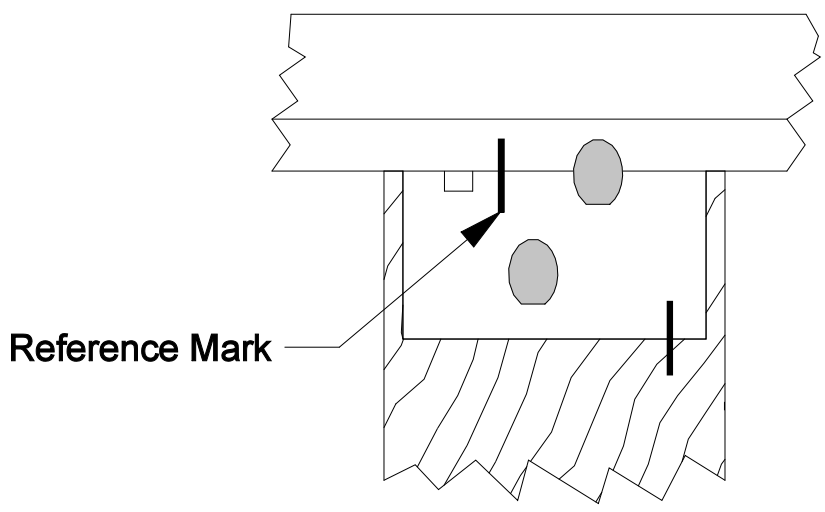

Reference Marks Prior To Cutting Rail

Figure 4-F

2. Determine the rail expansion (movement) required at each heat station using Table 4-H.

Continuous Welded Rail Adjustment Table								
Temperature Differential (°F)	**Amount of Adjustment Required (Inches) for a Length of CWR**							
	Station 1		**Station 2**	**Station 3**		**Station 4**		**Station 5**
	360 feet	**660 feet**	**720 feet**	**1,080 feet**	**1,320 feet**	**1,440 feet**	**1,520 feet**	**1,600 feet**
5	1/4	1/4	1/4	1/2	1/2	1/2	1/2	3/4
10	1/4	1/2	1/2	3/4	1	1	1-1/4	1-1/4
15	1/2	3/4	3/4	1-1/4	1-1/2	1-3/4	1-3/4	2
20	1/2	1	1-1/4	1-3/4	2	2-1/4	2-1/2	2-1/2
25	3/4	1-1/4	1-1/2	2-1/4	2-1/2	2-3/4	3	3-1/4
30	3/4	1-1/2	1-3/4	2-1/2	3	3-1/2	3-3/4	4
35	1	1-3/4	2	3	3-3/4	4	4-1/4	4-1/2
40	1-1/4	2	2-1/4	3-1/2	4-1/4	4-1/2	5	5-1/4
45	1-1/4	2-1/4	2-1/2	3-3/4	4-3/4	5	5-1/2	5-3/4
50	1-1/2	2-1/2	2-3/4	4-1/4	5-1/4	5-3/4	6-1/4	6-1/2
55	1-3/4	2-3/4	3-1/4	4-3/4	5-3/4	6-1/4	6-3/4	7
60	1-3/4	3	3-1/2	5	6-1/4	6-3/4	7-1/4	7-3/4
65	1-3/4	3-1/4	3-3/4	5-1/2	6-3/4	7-1/4	8	8-1/2
70	2	3-3/4	4	6	7-1/4	8	8-1/2	9

Table 4-H

3. Establish heat stations every 360 feet.
4. At first heat station of each string use a white metal marker to write the gang number, date and air temperature on the gage side of the rail web. Do not use soapstone, chalk or crayon.
5. At each subsequent heat station and before heating the rail, record the rail temperature and expansion required on the gage side web of the rail.
6. Continue numbering heat stations consecutively until a tie-in is made.
7. Establish match marks to identify rail movement at each heat station as follows (Figure 4-G-1).
   - On a spiked gage tie plate extend a mark from the plate onto the tie to verify that the plate does not move.
   - Extend match marks from the base of the rail onto the tie plate to monitor rail movement.
   - On the gage side of the same plate, record the string number and the heat station number.

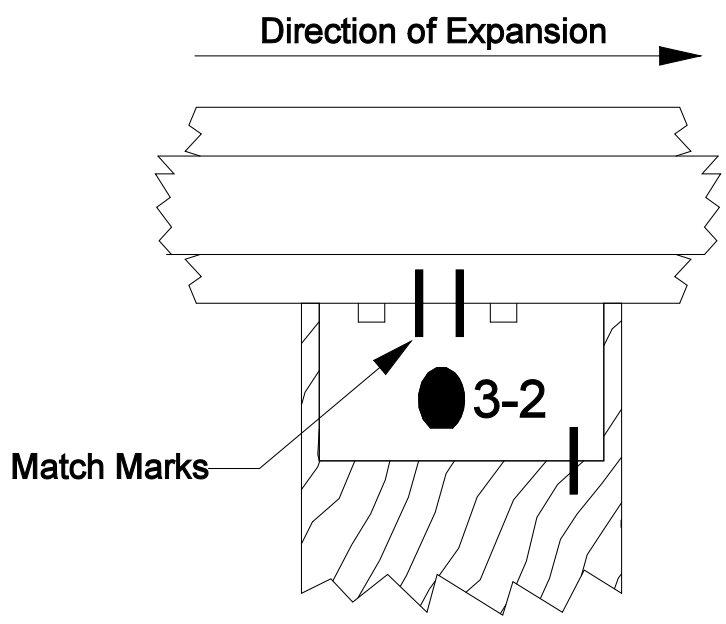

Match Marks Prior To Expansion

Figure 4-G-1

8. Ensure the required rail movement is attained at each heat station. See Figure 4-G-2.
9. On concrete ties, a single reference mark on the base of the rail and edge of the tie is sufficient.

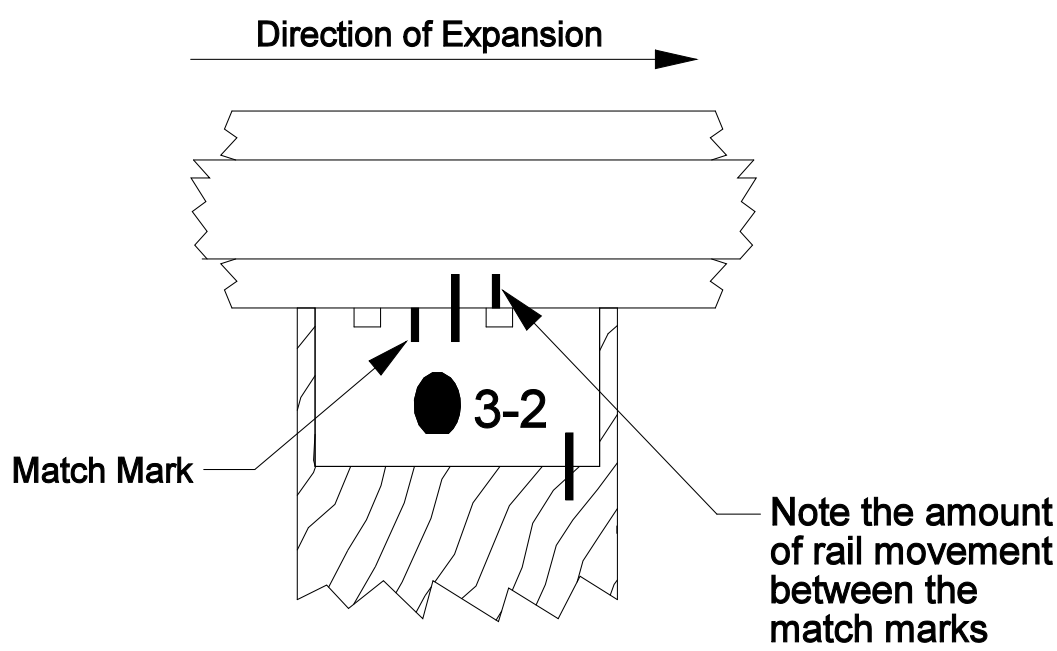

Match Marks After Expansion

Figure 4-G-2

B. Heat Rail

Follow these requirements when heating rail:

1. Start the rail heater at the beginning of the string, behind the gage spiker, and uniformly heat the rail while moving the rail heater toward the first match mark. Use the minimum amount of heat required in order to avoid overheating the rail.
2. Position rail crucibles to concentrate heat on the web of the rail.
3. Maintain propane pressure between 10 and 12 psi.
4. Do **not** heat across open deck bridges.
5. While heating, vibrate rail to encourage movement through the tie plates.
6. Tap tie plates with a spike maul or sledge to free rail movement. Do **not** strike the rail.
7. If the required rail expansion is not accomplished during the first pass with the rail heater, make additional passes.
8. When using heat and rail vibration to expand the rail, do not thread more than 2 strings of CWR into the tie plates ahead of the rail heater.
9. Do not leave gaps between strings of CWR unless the joint will be immediately field welded.
10. On concrete tie track, care must be taken to avoid excessive heat damage to the plastic fastening components.

C. Rail Anchoring

Follow these requirements when heating rail:

1. Examine the first match mark to determine if the rail is being expanded by the necessary amount. If it is, begin anchoring behind the rail heater. If rail anchoring does not keep up with the rail heater, wait until after the rail heater passes the first match mark and anchor several ties beyond the match mark to preserve the expansion that has been achieved.

4.5.2 CWR String Indication

When laying new CWR strings heat control engineer is responsible for the proper documentation of exact location where each end of string is installed in track. Follow procedures as outlined on the Engineering Website (http://home.www.uprr.com/emp/engineering/bus_area_sys_rail_gangs.cfm).

Figure 4-H shows how the end of each string is to be marked by welding plant. One end of the string will be marked A and the other B.

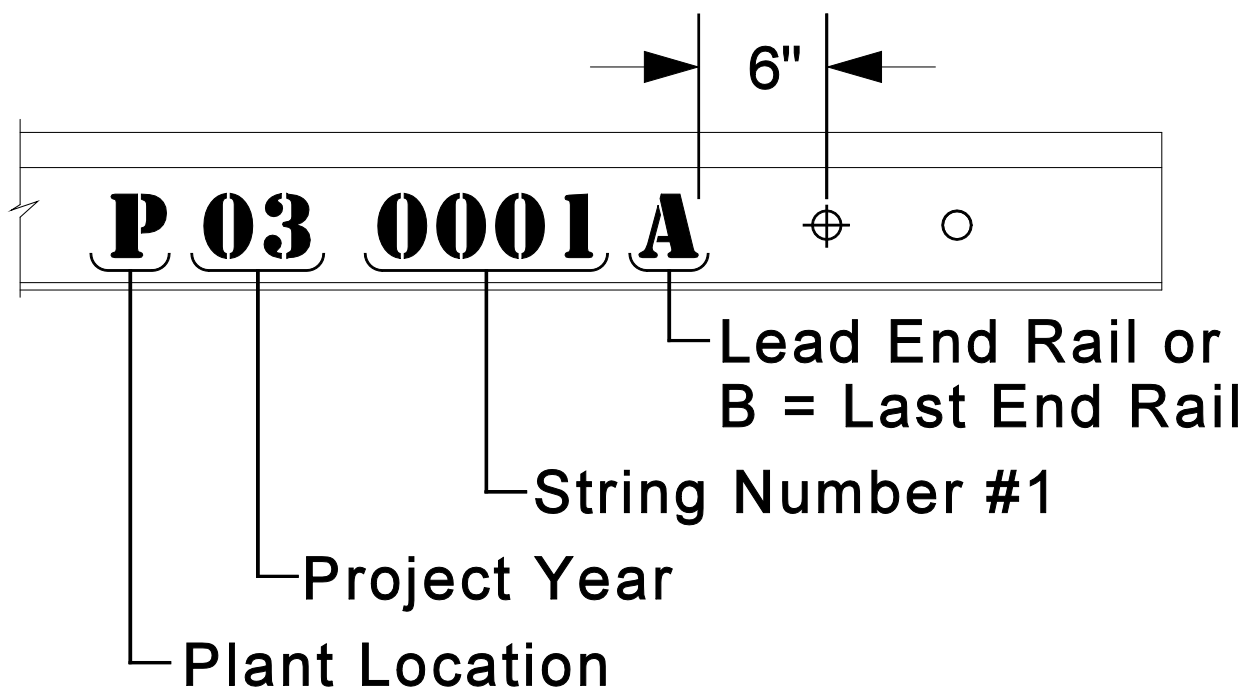

Figure 4-H

4.5.3 Laying CWR to Proper Neutral Temperature – New Construction

Do not apply heat to the rail during new construction until the track is fully ballasted, surfaced and lined.

Follow these requirements to neutralize rail temperature in the CWR during new construction:

1. Determine the ambient temperature.
2. Determine the designated rail laying temperature. SEE Standard Drawing 0045.
3. Use Table 4-H to determine amount of rail movement required to adjust rail to its neutral temperature.
4. Remove joint bars.
5. Remove the amount of rail as prescribed in table 4-H.
6. Remove rail clips or anchors for at least 550 ties (275 each way from the joint).

NOTE: In wood tie track, rail will be pulled through the spikes.

7. Stretch or heat the rail for the required distance.
8. Re-clip or re-anchor the ties.
9. Weld the joint.
10. Using a permanent paint stick, mark the date, air temperature, gang number, and amount of rail adjustment on the web of the rail.
11. Tamp ties that have been moved or disturbed.
12. Restore the ballast section with a ballast regulator.

4.5.4 Installing Maintenance CWR

It may be required to install rail on an emergency or maintenance basis because it is in need of replacement or when panel rail is being removed from a derailment location.

Follow these procedures when installing the rail.

1. Apply applicable reference marks on rail that will be cut. (Refer to Section 7.9.2 Placing Reference Marks)
2. Remove the rail to be replaced.
3. Install the new rail.
4. Based on the length of the rail being installed, refer to Section 7.9.1 Managing CWR Events to determine which method to use to manage the rail neutral temperature. Depending on the rail temperature at the time of rail installation additional adjustments may not be required.
5. Ensure standard anchor pattern is installed per Section 4.17 Rail Anchors for anchor requirements.

4.5.5 Installation of Track Panels

The term track panel includes turnouts, road crossings, rail crossings and any other installation of track panels.

NOTE: This section is not applicable to track panels installed because of derailments, refer to Section 4.5.6 - Installation and Adjustment of Track Panels at Derailments

Follow these guidelines when installing track panels:

1. If rail is in compression during warm weather the rail will expand. If rail is in tension during cold weather the rail will contract. To minimize rail movement in cold weather adjust or add any missing rail anchors in wood or concrete track at both ends of track panel zone.
2. Mark rail cut locations.
3. Apply applicable reference marks on each rail that will be cut. Refer to Section 7.9.2 Placing Reference Marks.
4. Remove existing track panel(s).
5. Install new track panel(s).
6. Determine the total length of the track panel(s) being installed. Refer to Section 7.9.1 Managing CWR Events to determine which method to use to manage the rail neutral temperature. Depending on the rail temperature at the time of repair additional rail adjustments may not be required.
7. Ensure standard anchor pattern is installed per Section 4.17 Rail Anchors for anchor requirements.

4.5.6 Installation and Adjustment of Track Panels at Derailments

The installation of track panels at a derailment requires additional steps compared to normal track panel installation due to the fact that reference marks cannot be established. The installation of track panels at a derailment requires additional attention pertaining to installation, temporary destressing and final rail relay.

Follow these requirements for the installation and adjustment of track panels at derailments:

1. When installing multiple track panels be aware of the joint gap between the rail ends, the effectiveness of rail anchors to resist longitudinal rail movement, ambient temperature during panel installation, the correct speed restriction for the condition and the risk of adding rail.
   Follow these requirements:
   a. Place hardwood shims to provide the correct gap when installing track panels as per the Section 4.5.7 Laying Bolted Rail.
   b. If rail is in compression during warm weather the rail will expand. If rail is in tension during cold weather the rail will contract. To minimize rail movement in cold weather adjust or add any missing rail anchors in wood or concrete track at both ends of track panel zone.
   c. Record the rail temperature on the web of the rail at the time of panel installation at each end of the panel zone.
2. After panels have been installed follow these requirements:
   a. In wood tie track, when more than five track panels are laid with square joints, limit the maximum allowable speed over the track to 40 MPH until the joints are staggered.
   b. In concrete tie track, when more than five track panels are laid with square joints, limit the maximum allowable speed over the track to 25 MPH until joints are staggered and then 40 MPH until CWR is relayed.
   c. When installing track panels at derailments in CWR territory, arrange to remove the jointed rail as soon as possible.
   d. Field managers must notify Engineering Planning of derailment locations requiring CWR lengths of 720 linear feet or more.
   e. Rail neutral temperature adjustment may be required prior to CWR placement. Use the rail temperature that was recorded at the time of the derailment as the neutral temperature for the panelized section. Refer to section 7.9.5 Maintaining Desired Rail Neutral Temperature Range to determine if slow order is required. When an adjustment is going to be made to panels refer to section 7.9.6 Rail Neutral Temperature Readjustment to determine the amount of rail to remove.
3. At the time of CWR rail relay utilize the following process:
   a. If rail is in compression during warm weather the rail will expand. If rail is in tension during cold weather the rail will contract. To minimize rail movement in cold weather adjust or add any missing rail anchors in wood or concrete track at both ends of track panel zone.
   b. Mark rail cut locations.
   c. Apply applicable reference marks on each rail that will be cut. (Refer to Section 7.9.2 Placing Reference Marks)
   d. Remove existing jointed rail.

e. Install new CWR rail.

f. Determine the total length of rail being installed. Refer to Section 7.9.1 Managing CWR Events to determine which method to use to manage the rail neutral temperature. Depending on the rail temperature at the time of rail relay additional rail adjustments may not be required.

g. Ensure standard anchor pattern is installed per Section 4.16 Rail Anchors for anchor requirements.

4.5.7 Laying Bolted Rail

Follow these requirements when laying bolted rail:

1. Do not install rails less than 15 feet.
2. Do not use rail that has been cut with a torch or that has holes that have been made with a torch.
3. When sawing rail for re-use, make the cut at least 2 inches from any torch mark on the rail.
4. Use hardwood shims to provide the correct gap at each joint to allow for rail expansion. Use Table 4-I-1 and Table 4-I-2 to determine the correct shim thickness.

39-Foot Rail Lengths	
Rail Temperature	**Opening**
Below 25° F	1/4 inch
25°-50° F	3/8 inch every other joint
51°-75° F	1/8 inch
Above 75° F	1/8 inch every other joint

Table 4-I-1

78-Foot Rail Lengths	
Rail Temperature	**Opening**
Below 50° F	3/8 inch
51°-75° F	1/4 inch
76°-100° F	1/8 inch
Above 100° F	1/8 inch every other joint

Table 4-I-2

5. Apply rail anchors immediately after laying rail. Do not leave track unanchored overnight.
6. After spiking the joint and tightening the bolts, remove the shims.
7. After installing the rail, surface and line the track as soon as possible to avoid damaging the new rail at old joint locations.

4.6 Inside Guard Rails

Refer to Engineering Standard Drawing Nos. 4000 to 4016 to determine which structures require inside guard rails. Refer to Engineering Standard Drawing Nos. 4019 to 4090 to determine turnout guard rail use. These drawings also show construction details.

Follow these guidelines for keeping inside guard rails fully plated, bolted and spiked:

1. On tangent track, spike the inside guard rail with two spikes per plate on each rail on the tangent portion, and four spikes per plate on each rail on the curved portion.
2. On curved track, spike the entire inside guard rail with four rail spikes per plate on each rail.
3. Do not install joints in the curved portion of the inside guard rail except where an insulated joint is required in signalized territory.

4.7 Track Bolts

Bolts secure rails in frogs and joints to minimize rail movement and maintain rail-end alignment. Bolts of proper diameter and length accommodate rail movement and minimize stress in the bolt holes of rail ends.

NOTE: Keep bolts tight in all applications. Use proper length and diameter bolt.

4.7.1 Track Bolt Sizes

Determine the proper bolt and washer size for a specific rail section from Standard Drawing No. 0950.

4.7.2 Track Bolt Installation

Follow these requirements when installing track bolts:

1. Replace track bolts that are missing, bent, cracked, or worn more than 1/8 inch in diameter, or that cannot be tightened to compress the washer.
2. Install bolts in joints through all holes drilled in rail ends.
3. Replace bolts in jointed rail as follows:

- Use only one washer per bolt.
- Tighten the nut until the lock washer is compressed.
- Avoid over-tightening bolts.
- Tighten all of the bolts in a joint.

4. Replace bolts in CWR as follows:
   - Use only one washer per bolt.
   - Tighten nut to refusal.
   - Tighten all bolts in a joint.
5. Tighten bolts in rail joints alternately and equally with a hand-operated or power-operated wrench as shown in Figure 4-I-1 and Figure 4-I-2.

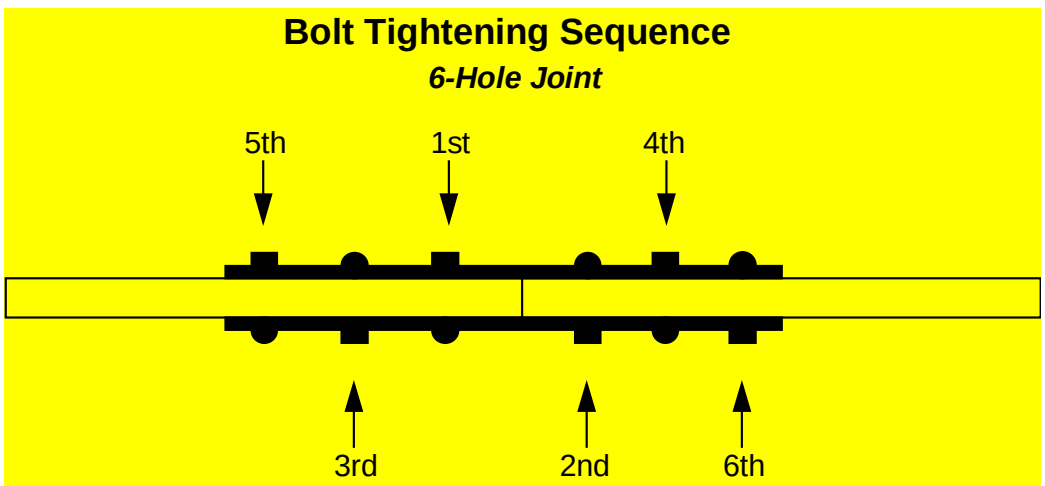

Figure 4-I-1

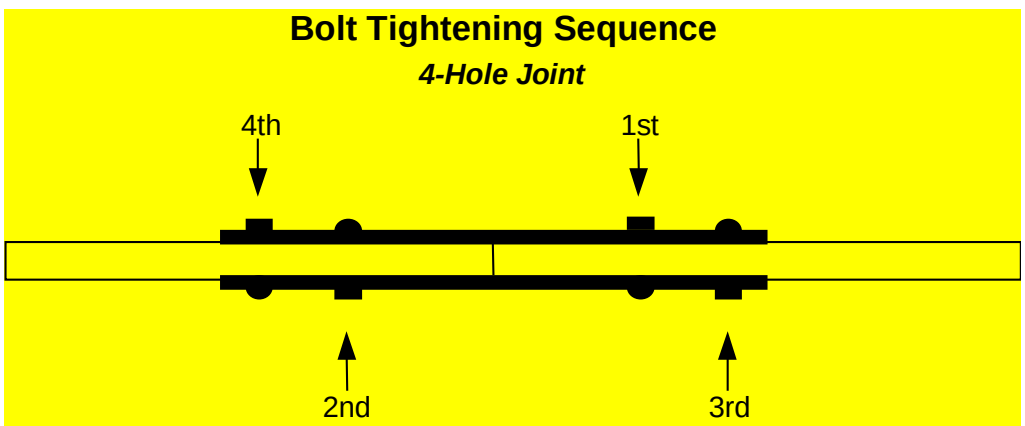

Figure 4-1-2

4.8 Joint Bars

Joint bars join two rail ends of the same size. Follow these requirements:

1. Connect rails with joint bars of the proper design and dimension for the rail section.

NOTE: Markings on the side of joint bars indicate their rail section design.

2. Visually inspect all joint bars for cracks or damage before use. **Cracks may be visible at top or bottom where the bar contacts rail head or base.**
3. Joint bars found to be defective shall be marked with Safety Red enamel paint, scrapped and must not be reused.
4. Never reconfigure joint bars by grinding, welding or torch cutting.
5. Use a high relief joint bar on the gage side of joint when rail is worn to an extent that the flange of the wheel would make contact with a standard joint bar.
6. When drilling rail ends, do not drill through joint bars.
7. Apply the standards for joint bars to compromise bars and insulated joints unless otherwise noted.
8. Use insulated joint bars only where necessary to isolate track circuits.
9. Field weld straps are **not** joint bars. Use them only in conjunction with a field welded joint as outlined in Section 4.14 Reinforcing Weld Straps.

4.8.1 Installation of Joint Bars

When tightening bolts in joint bars, use a sledgehammer to:

- Tap along the bottom flange of non-skirted joint bars to seat the bar against the rail.
- Tap along the base of base-supported (skirted) joint bars to seat the bar against the rail to obtain full-base bearing.

4.9 Compromise Joint Bars

Compromise joint bars align the tread and gage lines of adjoining rails of different sizes. Follow these requirements:

1. Connect rails with compromise bars of the proper design and dimension for the rail sections joined.

NOTE: Compromise joint bars are marked with the weight of the rail on each side.

2. Due to various amounts of wear on the rail head, adjoining rails may require build up or grinding. Refer to Section 4.10.7 Rail Mismatch.
3. Never reconfigure compromise joint bars by grinding, welding or torch cutting.
4. Avoid installing compromise joints that join rails with different size rail bases at these

locations:

- Within the limits of curves.
- On open-deck bridges.
- In turnouts on switch ties.

4.9.1 Offset ("Handed") Joints

Offset or "handed" compromise joint bars join and align the tread and gage area of rails of different rail base size. The joint bars are offset to align the gage area of the rails in the joint. Offset joint bars are manufactured in sets identified as right hand and left hand.

Identify the right or left hand of the compromise joint bars as follows:

1. Stand with your back to the larger size rail and face the smaller size rail. The joint on your left-hand side would be designated as the left-hand (LH) joint and the joint on your right side would be the right-hand (RH) joint.
2. Use Figure 4-J-1 to identify and install offset or "handed" compromise joint bars.

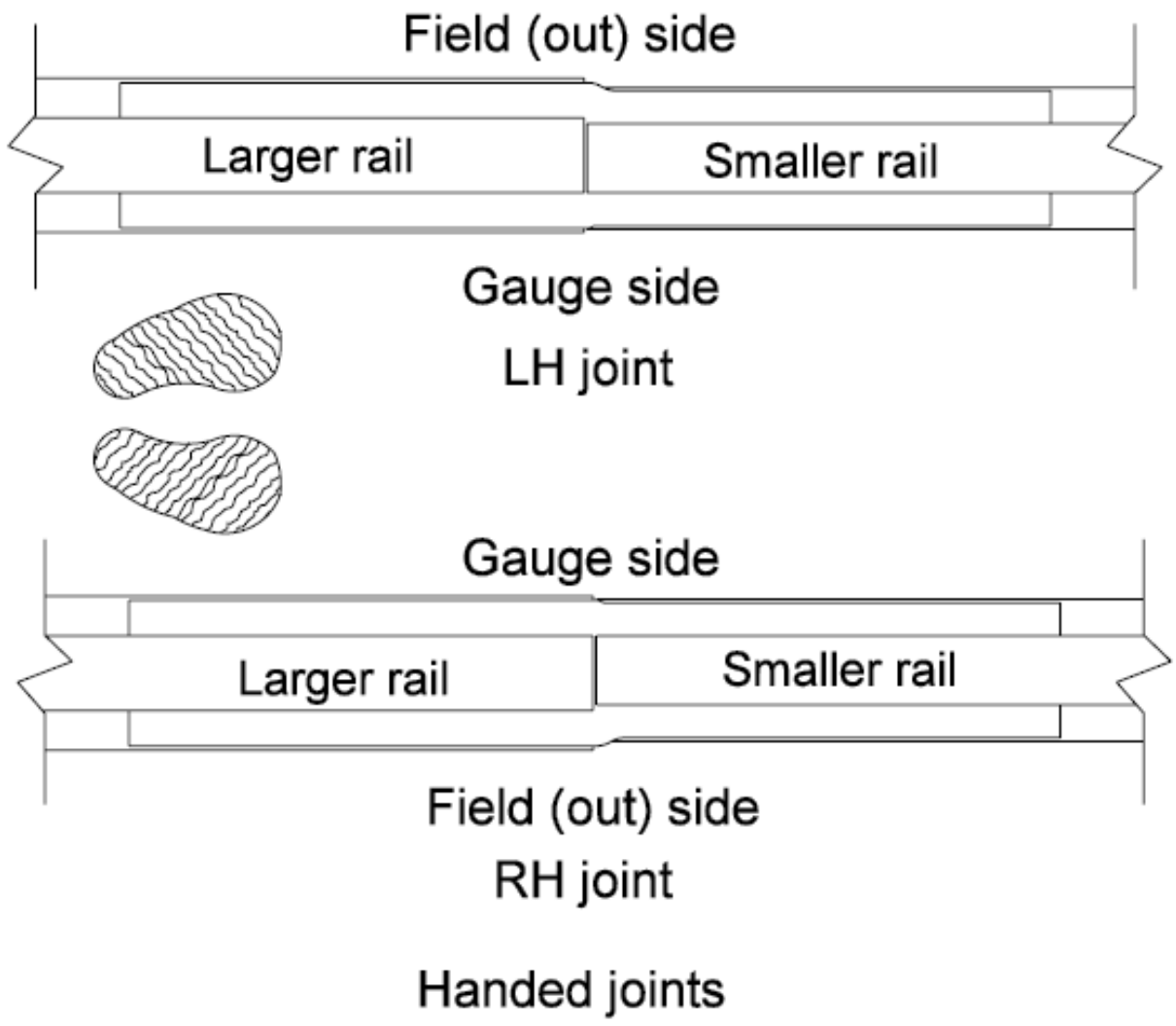

Figure 4-J-1

4.9.2 Step ("Non-Handed") Joint Bars

Step or "non-handed" joint bars align the tread area of rails with the same rail base size. Apply step joint bars when the difference in the width of rails does not exceed 1/8 inch at gage lines.

1. Bars are identified as A and B. Together they make up a joint set that fit either side of the rail.
2. Depending on which rail the joint bars are to be applied, the individual bars will be placed on either the gage side or field side of the rail. See Figure 4-J-2.

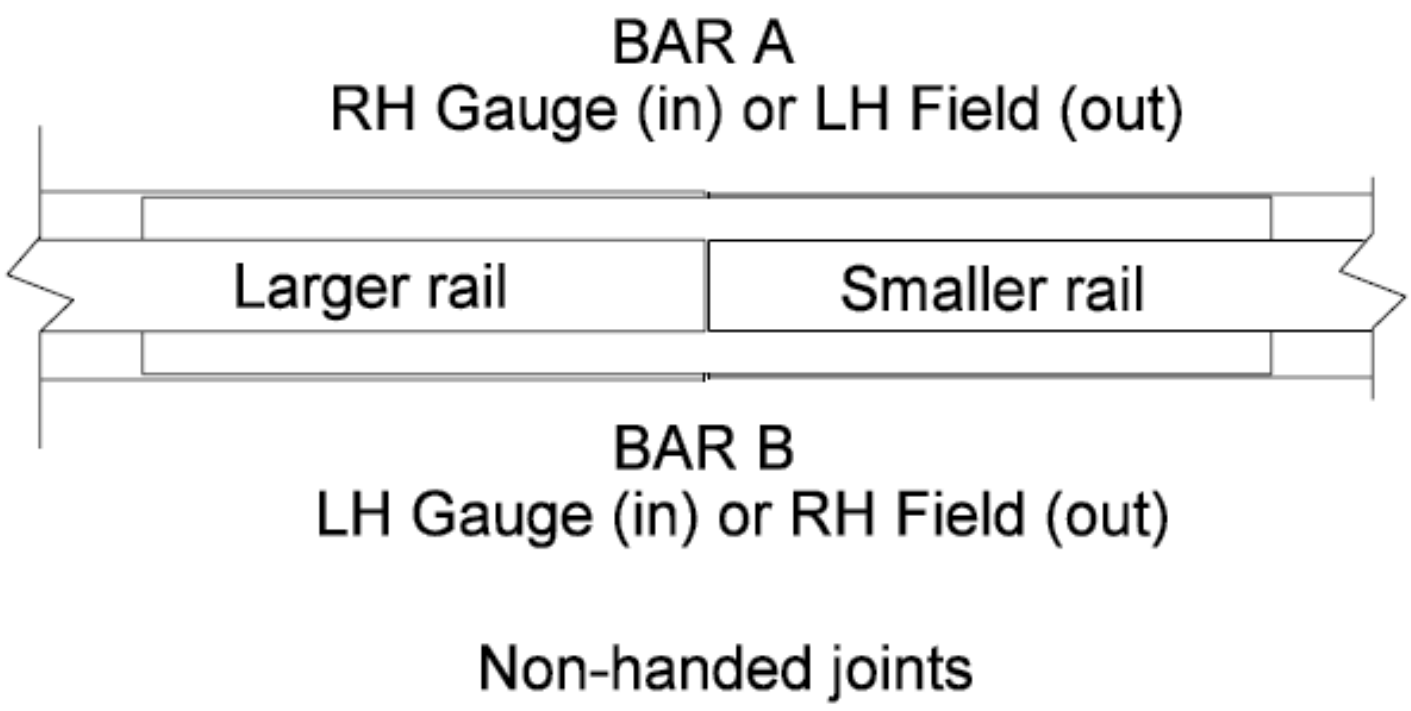

Figure 4-J-2

4.9.3 Compromise/Transition Rails

Compromise and Transition Rails are manufactured rails that are used to connect rails of different heights and or different rail sections.

In compromise rails, if a defect is found within 30 inches in either direction of the forged area, the entire rail must be replaced.

Available Compromise/Transition Rails				
New Rail Section	Worn Rail Section	Vertical Wear	Total Length	Item Number
115	90	3/8"	25' LH	552-2219
115	90	3/8"	25' RH	552-2220
133	115	1/8"	20' LH	552-3820
133	115	1/8"	20' RH	552-3821
115	136	3/8"	24' LH	552-4385
115	136	3/8"	24' RH	552-4386
136	115	0"	24' LH	552-4387
136	115	0"	24' RH	552-4388
136	115	1/8"	24' LH	552-4389
136	115	1/8"	24' RH	552-4390
136	133	7/8"	37.5'	552-4393
136	136	7/8"	40'	552-4395
141	133	7/8"	37.5'	552-4400
141	132	11/16”	40’	552-4405
N/A	136 to 115	7/8” and 3/8”	37.5’	552-4407

Table 4-I-3

Follow these instructions when installing Compromise/Transition Rails:

A. 141/133# Compromise/Transition Rails

Compromise transition rails shall be used whenever joining 141# rail to 133# rail. See Figure 4-K. Compromise joint bars are available for temporary installations but must never be used for permanent installations.

a. Measure the height of the rail to remain in the track.
b. Look at the transition rail drawing and determine where the height of rail exists in the tapered area that matches the height of the rail to be left in the track.
c. Locate where the forged area of the rail will be in the track. (Transition area must not be on top of ties).
d. Locate all cuts in tie cribs to facilitate welding.
e. Cut tapered end of rail at the location determined to match height of existing rail in track. (Forged area must not be on top of ties).
f. Make remaining cuts in track and install transition rail.
g. Weld all rail joints.

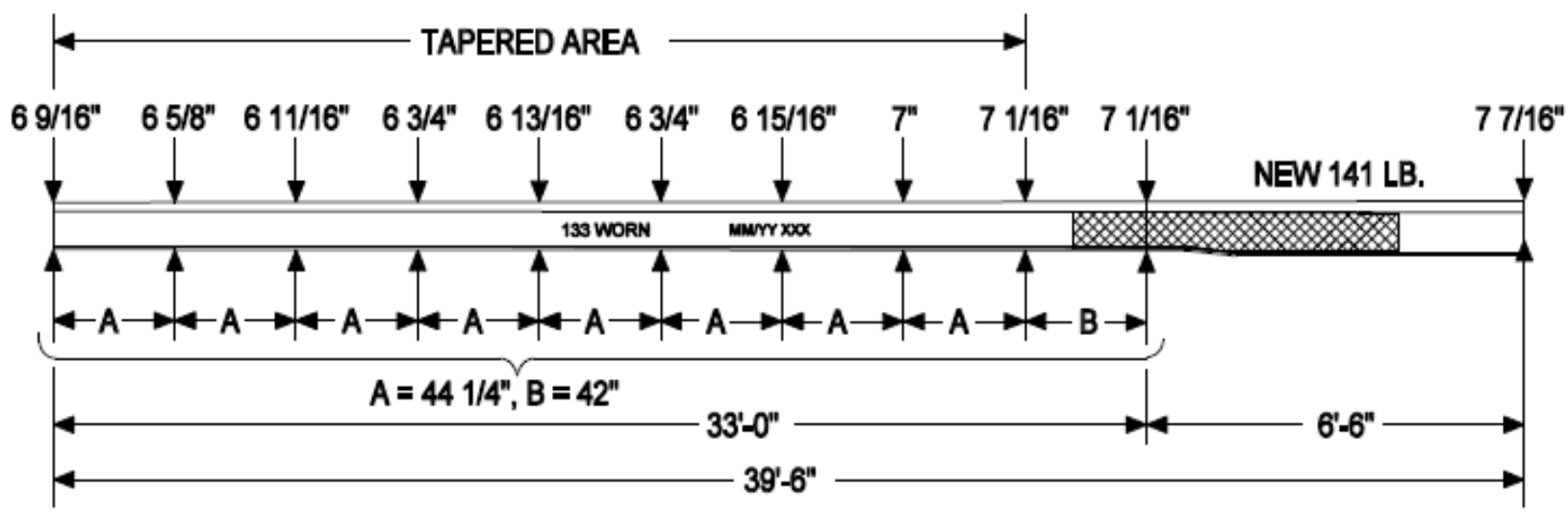

Figure 4-K

B. 136# to 115# Compromise/Transition Rails:

In all main line applications when joining 136# rail to 115# or 119# rail, use the 136/115# compromise/transition rail. See Figure 4-L. Compromise joint bars are available for temporary installation, but must never be used for permanent installations.

a. Measure the height of the rail to remain in the track.
b. Look at the transition rail drawing and determine where the height of rail exists in the tapered area that matches the height of the rail to remain in the track.
c. Locate where the forged area of the rail will be in the track. (Transition area must not be on top of ties).
d. Locate all cuts in tie cribs to facilitate welding.
e. Cut tapered end of rail at the location determined to match height of existing rail in track. (Forged area must not be on top of ties).
f. Make remaining cuts in track and install transition rail.
g. Weld all rail joints.

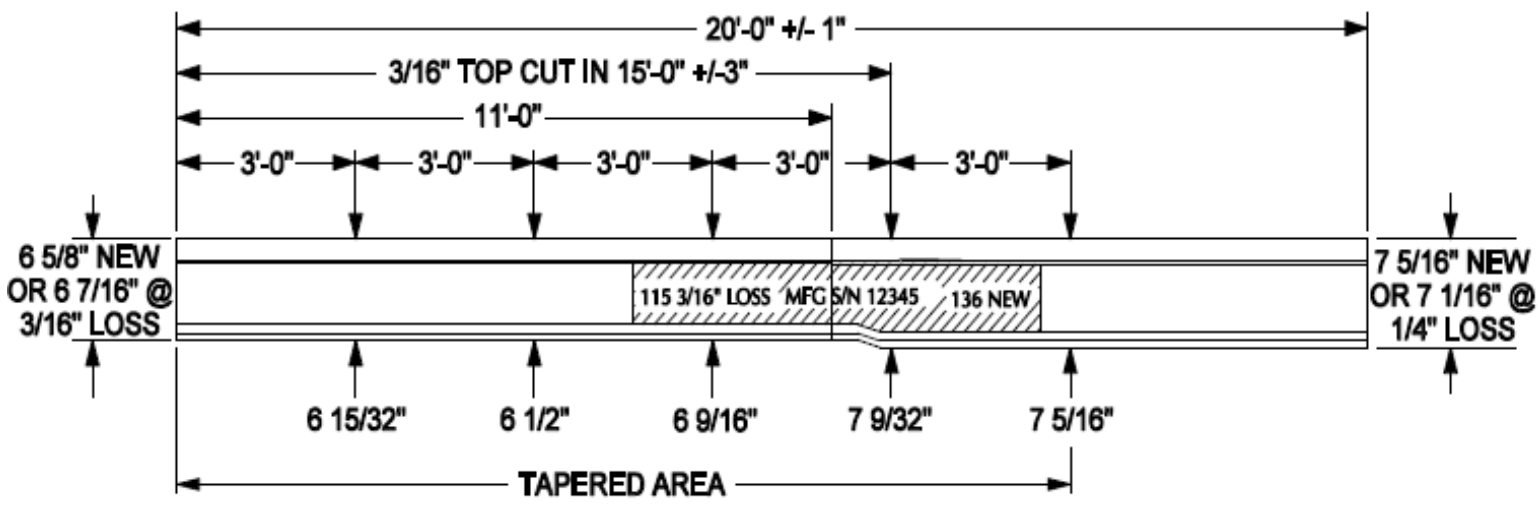

Figure 4-L

4.9.4 141# to 136# Transition Rails

Transition rails must be used whenever joining 141# rail to 136# rail if the rail height difference is more than 1/4 inch. See Figure 4-M. If the rail height difference is between 1/8 and 1/4 inch a 141# new/worn thermite weld may be used. If height difference is 1/8 inch or less a standard 141# thermite weld may be used.

Follow these instructions when installing 141# to 136# transition rails:

a. Measure the height of the rail to remain in the track.

b. Look at the transition rail drawing and determine where the height of rail exists in the tapered area that matches the height of the rail to remain in the track.

c. Cut transition rail at the location determined to match height of existing rail in track.

d. Make remaining cuts in track and install transition rail.

e. Weld all rail joints.

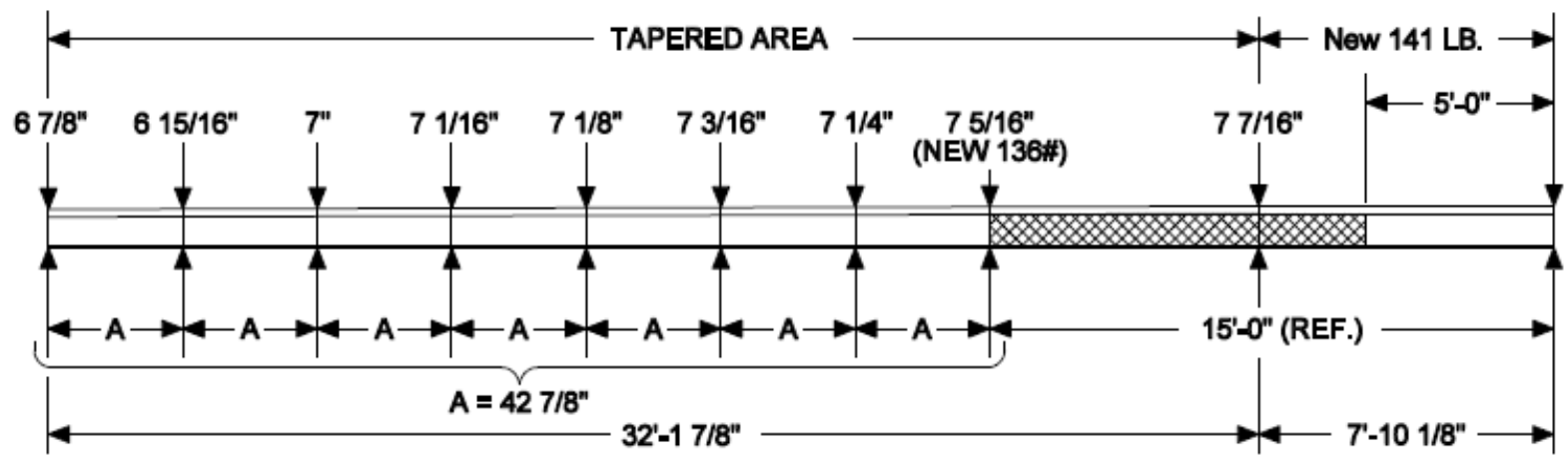

Figure 4-M

4.10 Rail Joints

The rail joint consists of the rail area and Other Track Material (OTM) within the entire length of the joint bars.

NOTE: If rail has been torch cut, remove with rail saw, 2 or more inches of rail before installing rail to make a joint.

4.10.1 Permanent Joints

Permanent joints are joints that are not intended to have the rail ends welded together.

Permanent joints include:

- Insulated joints.
- Joints in bolted rail territory.
- Joints in CWR that will remain in track (examples are: Joints in turnouts and crossing frogs).

Permanent joints must be:

- Fully drilled.
- Fully bolted.
- Bolt holes and rail ends to be beveled and slotted per Standard Drawing No. 0745. To de-burr and bevel holes drilled in the field, use abrasive stone item number 411-3867.
- Fully box anchored per Section 4.16 Rail Anchors in CWR territory.

4.10.2 Joint Placement and Support

To enable joint removal in CWR with thermite field welds, do the following:

1. Except in an emergency to pass trains over a broken rail, joints must not be located within:
   - 30 inches from an existing plant or in-track weld or 15 feet from an existing rail joint or field weld on subdivisions with greater than or equal to 75 MGT or as specified by the Chief Engineer. Refer to the Track Maintenance Planner home page with the tab named "15' weld rule" for the subdivisions over 75 MGT or identified by the Chief Engineer.

NOTE: The only exception to this 15' weld rule is in special track work around or near turnouts and rail crossings (diamonds) where because of geometry layout or component spacing, the 15' is not obtainable.

   - 30 inches from an existing rail joint or weld of any type on subdivisions with less than 75 MGT or not specified by the Chief Engineer.

NOTE: In order to prevent weld clusters or a multitude of field welds installed closely together, no more than four field welds are allowed in a 39' section of rail.

NOTE: When installing replacement rail, effort must be made to eliminate thermite welds.

2. Center joints between ties to enable field welds to be made without moving or adzing tie. Field welds must not be located directly over a tie. Refer to Section 4.13 Field Welding (Thermite).

Joints must be properly supported by the correct tie arrangement. Reference Section 3.1.9 Joint Tie Support for minimum requirements.

4.10.3 Rail Joint Stagger

Follow these requirements for staggering rail joints:

1. The standard stagger between consecutive rail joints on opposite rails is 12 feet, plus or minus 2 feet.
2. Staggered rail joints are preferred but not required on industry leads and yard tracks where the speed does not exceed 25 MPH and the curvature is less than 4 degrees.
3. When trying to figure the stagger of rail around a curve use this rule of thumb: For every 80 feet of rail laid, the low rail will become 1 ½ inches longer for every one degree of curvature.

4.10.4 Joint Counting Definitions

Count only those joints in CWR that can be eliminated by either welding or laying rail. (**Do not include joints in jointed rail territory).** Do not count the joints that cannot be eliminated (non-extended length frogs and insulated joints primarily), even though we will inspect them as part of our joint inspection process.

Do not put a joint into more than 1 category - even though it may fit the description of more than one category. For example, a joint on concrete that falls within 500' of a bridge should only be counted as a bridge joint – not a mainline concrete joint.

To eliminate double counting of joints, please use the following hierarchy to determine the proper category for each joint:

1. **Mainline Bridge –** Any joint that is on or within 500 feet of a bridge should be counted as a bridge joint, regardless of whether it is in a switch, on concrete ties, etc. (only exception are heel block joints, that is a separate category)
2. **Mainline Concrete** – Any joint that is on concrete ties, except bridge joints (#1), should be counted as a concrete joint.
3. **Turnout Joint(s)** – Any weldable joint, other than frog joints, in the **Turnout Side** of any mainline switch associated with a Main Track Junction, Mainline Connection (any powered turnout connecting track that connects to any mainline tracks), Mainline Siding or Mainline Crossover. See Figure 4-N-1. **(NOTE: Don't count turnout side on Industry, Yard, Setout, or other none mainline tracks). (Turnout Joints that are within 500 feet of a bridge should be included in the Bridge Joint Category).**
4. **Mainline** – All joints that are not included in #1 through #3 above should be counted as mainline joints. Including joints in a mainline side running rail of a switch and Dead Insulated joints.
5. **Jointed Heel Block -** Mainline side of switch and also the turnout side of a Main Track Junction, Mainline Connection (any powered turnout connecting track that connects to any mainline tracks), Mainline Siding or Mainline Crossover. The Heel Block Joint is in a category of its own. **(Remember heel blocks can be eliminated by use of an extended point).**
6. **Dead Insulated Joint(s)** – Any insulated joint to be removed ("bond-arounds"). Do not include active joints in this count.

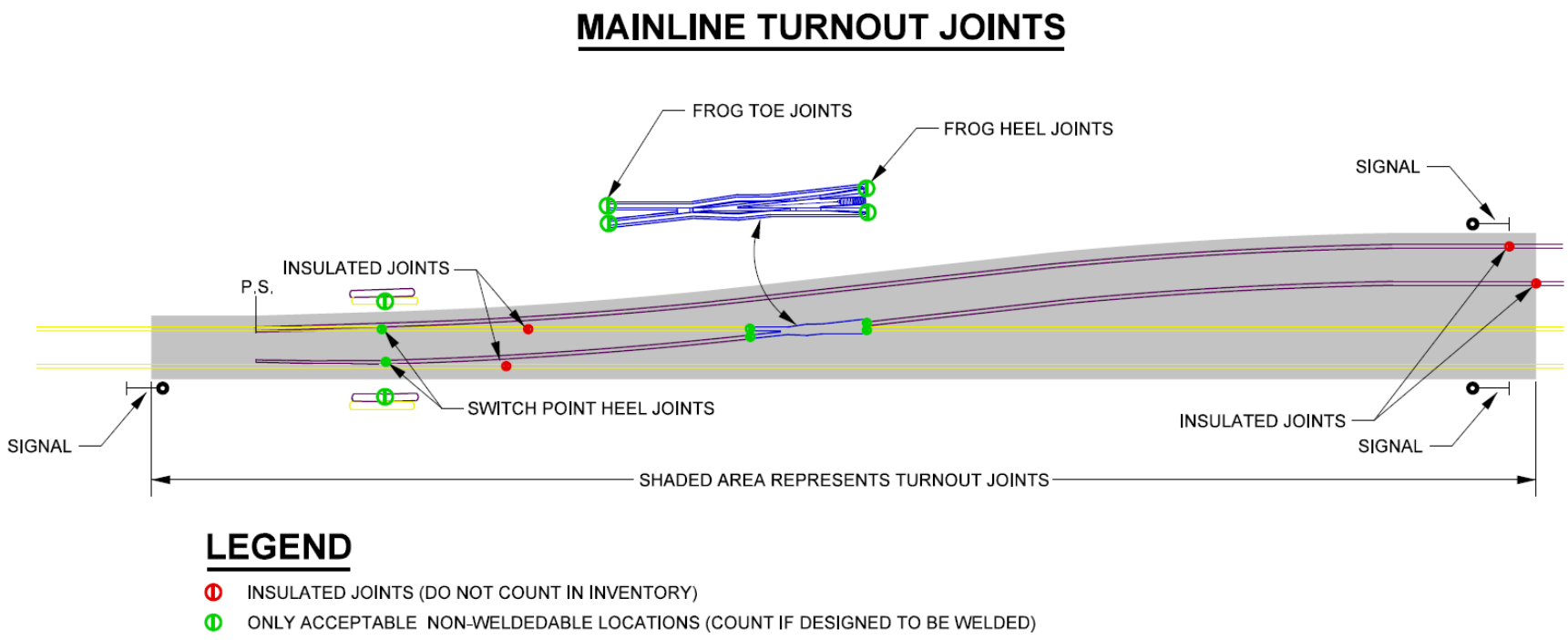

Figure 4-N-1

4.10.5 Pull-Aparts

Pull-aparts or "stripped joints" result from insufficient, missing, or defective bolts, insufficient rail anchors, or both. Follow these requirements for pull-aparts:

1. If a pull-apart is 4 inches or less and the rail ends are not damaged, close the pull-apart by using a hydraulic rail expander or by applying heat.
2. If unable to close rail ends using heat or hydraulic rail expander, or a pull-apart is more than 4 inches, or rail end damage is apparent, install a rail that is 15 feet or longer using reference marks and record the rail adjustment. Refer to Section 7.9.2 Placing Reference Marks.
3. When repairing pull-aparts, visually inspect each joint bar, install all new bolts and adjust rail anchors tightly against the ties per CWR adjustment requirements.
4. In CWR territory, four hole joints that pull-apart more than once must be fully drilled, bolted and anchored or field welded within 30 days.
5. Six hole joints that pull-apart more than once should have a rail cut in and joints welded. When repairs are made to a stripped joint or failed joint bar, the adjustment or addition of anchors will be as prescribed in Table 4-J-1.

Condition	Action
Bolted joint in CWR experiencing service failure (stripped joint) or failed bar(s) with gap* present *Gap exists if it cannot be closed by drift pin	1. Weld joint, **OR** 2. Remediate joint conditions (per Section 4.9 Rail Joints), replace bolts (new, in-kind or stronger), **and** weld joint within 30 days, **OR** 3. Replace failed bar(s), install 2 additional bolts **and** adjust anchors, **OR** 4. Replace failed bars, bolts (if broken or missing) **and** anchor every tie for 195' in both directions, **OR** 5. Add rail.

Table 4-J-1

4.10.6 Rail Drilling

When drilling rail:

1. Refer to Standard Drawings 700 to 735 for drilling requirements.

NOTE: Do not install rail in the main track that has extra drilled holes. However, you may leave rail with bolt holes in the track when removing joint bars and field welding.

2. Remove joint bars from rail when drilling bolt holes. Do not drill holes through joint bars.
3. Use the correct indexing bar and drill fillet template for the rail section.
4. When using the index bar for setting the hole spacing, set the end of the bar flush with the rail end, as shown in Figure 4-N-2. Do not "split" joint gap.
5. Fully drill each rail end for the joint bar that will be applied. If the joint will be field welded, drill only the two outermost holes.
6. In CWR territory, drill the two outermost holes on each rail end only when the joint will be field welded within 90 days. Fully drill the joint if temperature conditions are likely to produce a pull-apart.

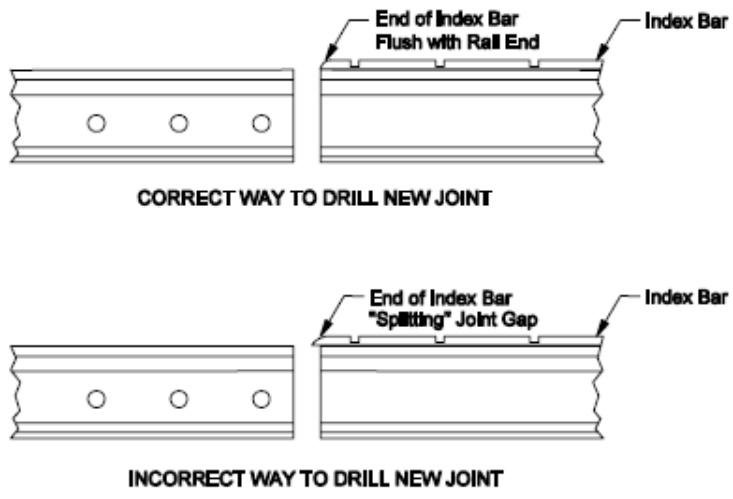

Figure 4-N-2

7. Holes drilled in rail ends for standard joint bars should be sized 1/16”-1/8” larger than the diameter of the bolt to be used. (Table 4-J-2).

Rail Section	Rail End Hole Spacing (inches)			Bolt Size (Inches)	Above Base (inches)	Hole Size (inches)
	Hole 1	Hole 2	Hole 3			
141 lb. UP	3-1/2	6	6	1-1/8 X 6 ½	3-3/32	1-1/4
136 lb. UP	3-1/2	6	6	1-1/8 X 6 ½	3-3/32	1-1/4
136 lb. MP and WP	3-1/2	6	6	1 X 6	3-3/32	1-1/8
136 lb. SP	2-1/2	6-1/2	6-1/2	1-1/8 X 6 ½	3-3/32	1-1/4
133 lb. All	3-1/2	6	6	1-1/16 X 6	3	1-1/8
132 lb. CNW, UP, & MP	3-1/2	6	6	1 X 6	3-3/32	1-1/8
132 lb. WP	2-15/16	6	6	1 X 6	3-3/32	1-1/8
132 lb. MP 4 hole	3-1/2	6		1 X 6	3-3/32	1-1/8
131 lb. MP	2-1/2	6-1/2	6-1/2	1 X 6	3-23/32	1-1/8
131 lb. UP	2-15/16	6-1/2	6-1/2	1-1/16 X 6	3-3/32	1-1/8
131 lb. 4 hole	2-1/2	6-1/2		1-1/16 X 6	3-3/32	1-1/8
119 lb. UP and all others	3-1/2	6	6	1 X 6	2-7/8	1-1/8
119 lb. WP	2-1/2	6-1/2	6-1/2	1 X 6	2-7/8	1-1/8
119 lb. SP	2-1/2	6-1/2	6-1/2	1-1/8 X 6 ½	2-7/8	1-1/4
115 lb. UP, WP	2-1/2	6-1/2	6-1/2	1 X 6	2-7/8	1-1/8
115 lb. SP	2-1/2	6-1/2	6-1/2	1-1/8 X 6 ½	2-7/8	1-1/4
115 lb. CNW, all others	3-1/2	6	6	1 X 6	2-7/8	1-1/8
113 lb. SP	2-1/2	6-1/2	6-1/2	1-1/8 X 6 ½	2-7/8	1-1/4
112 lb. All 4 hole	2-1/2	6-1/2		1 X 6	3-1/16	1-1/8
112 lb. MP 6 hole	3-1/2	6	6	1 X 6	2-7/8	1-1/8
110 lb. UP	2-11/16	5-1/2		1-1/16 X 5 ½	2-13/16	1-1/4
110 lb. CNW and SP	2-11/16	5-1/2		1 X 5 ½	2-13/16	1-1/8
110 lb. MP	2-15/16	6		1 X 5 ½	2-5/8	1-1/8
100 lb. UP	2-5/8	5-1/2		1 X 5 ½	2-1/2	1-1/8
100 lb. WP	2-11/16	5-1/2		1 X 5 ½	2-1/2	1-1/8
100 lb. MP	2-13/32	5		1 X 5 ½	2-3/4	1-1/8
100 lb. CNW	2-1/2 or 2-21/32	6 or 5-1/2		1 X 5 ½	2-34 or 2-1/2	1-1/8
90 lb. UP	2-5/8	5-1/2		15/16 X 4 5/8	2-9/16	1-1/8
90 lb. UP and CNW	Varies	Varies		7/8 X 5	Varies	Varies

Table 4-J-2

8. When drilling bolt holes:
   - Apply the proper amount of pressure to the drill bit to ensure drill bit does not overheat.
   - Keep drill bits lubricated.

Water is the only recommended lubricant. When temperatures are below freezing use a mixture of windshield washer fluid and water as lubricant.

   - Bolt holes and rail ends to be beveled and debured per Standard Drawing 0745.

NOTE: DO NOT torch cut bolt holes under any circumstances.

4.10.7 Rail Mismatch

Rail mismatch is an uneven railhead surface or exposed rail end on the gage or running surface of a rail at a joint location. Rail end mismatch is caused by loose joint bars, or a new or slightly worn rail installed against a heavily worn rail.

Follow these requirements for avoiding or correcting rail mismatch:

1. Except in an emergency, do not install rail ends with a mismatch exceeding 1/4 inch on the tread or running surface or the gage side.
2. When replacing rail, select and install a replacement rail that most closely matches both the gage side and running surface. Use the rail wear measuring device. Item 410-5462.
3. Correct rail mismatch by welding the rail ends and/or grinding using a method described in Form 7913, “Instructions for Inspecting, Welding and Grinding of Rail and Track Components”.
4. Place speed restrictions according to the table below when mismatched rails at a joint exceed the values in Table 4-K.

Joint Type	Class of Track	Tread mismatch of rails at joints more than:	Gage mismatch of rails at joints more than:	Batter at joints more than:
Standard rail joint	Class 1 track	.250” (1/4”)	.250” (1/4”)	.250” (1/4”)
Standard rail joint	Class 2 track	.250” (1/4”)	.187” (3/16”)	.250” (1/4”)
Standard rail joint	Class 3 track	.187” (3/16”)	.187” (3/16”)	.250” (1/4”)
Standard rail joint	Class 4 and 5 track	.125” (1/8”)	.125” (1/8”)	.187” (3/16”)
Standard rail joint	Class 6 track	.092” (3/32”)	.092” (3/32”)	.125” (1/8”)

Table 4-K

4.10.8 Rail Joint Gap

The rail joint gap is the distance between rail ends of a bolted joint. The design gap in a rail joint is 1/8”.

1. Excessive rail gap is caused by:
   - Mis-drilled rail ends.
   - Deformed (stretched) bolts due to longitudinal rail forces.
   - Insufficient or improperly applied rail anchors.
   - Elongated or oversize bolt holes.
   - Undersized bolts.
2. Excessive rail joint gap causes large impact loads on the joint system which can lead to:
   - Joint bar failure.
   - Broken rail ends and rail defects.
   - Premature tie failure.
   - Ballast degradation.
   - Surface geometry defects.
3. Rail joint gaps that do not meet the criteria in Table 4-L should be repaired within 10 days to achieve a maximum rail gap of 7/16 inch.

Class of Track	Maximum Allowable Rail Joint Gap (inches)
Class 6	1/2"
Class 4 or 5	1"
Class 2 or 3	1-1/2"
Class 1	2"

Table 4-L

4.11 Insulated Joints

Insulated joint bars perform the same function as standard joint bars. In addition, they isolate the rail ends from each other to allow the signal track circuit to work properly. Figure 4-O shows a typical cut section.

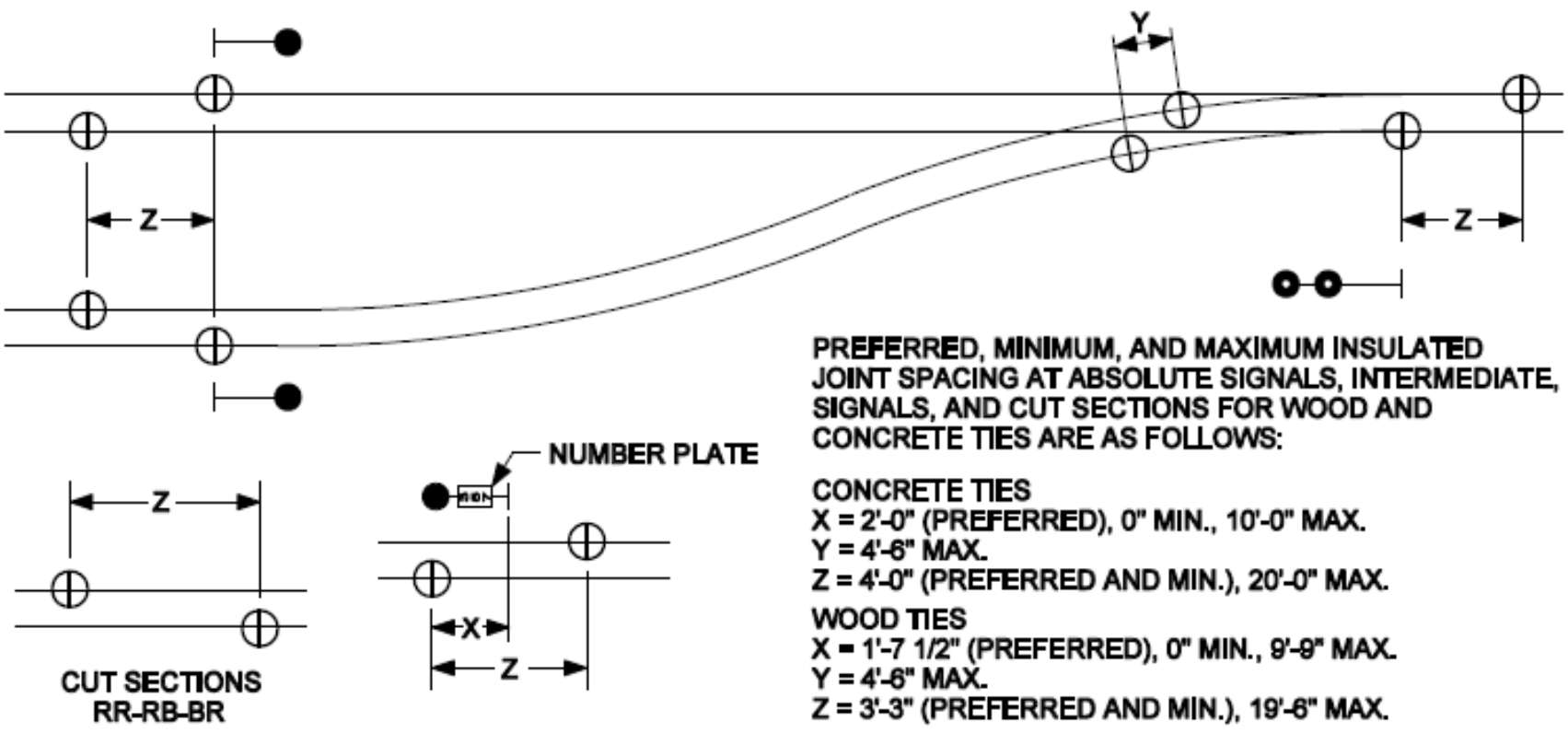

Figure 4-O

Follow these requirements:

1. Verify the proper placement of insulated joints with a signal representative before moving their location or installing a new location.
2. The track and signal departments are jointly responsible for installing and maintaining insulated joints.
3. Remove from track within 30 days any insulated joints that are no longer required due to track circuit changes.
4. On wood ties do not place the middle of an insulated joint on top of a tie plate.

4.11.1 Types and Applications

Insulated joint rail plugs are constructed from head hardened rail. See Table 4-M.

Insulated Joint Applications		
Type	**Rail Type**	**Track Speed**
Long Angle Profiled (LAP)	CWR	Any
I-Bond	CWR	Any
Poly-Coated	Jointed	Over 10 MPH
Fiberglass	Jointed	10 MPH or Less

Table 4-M

A. Long Angle Projection (LAP) Insulated Joints (Maintenance Only)

1. LAP joints as in Figure 4-P-1, do not have a left hand or right hand. They can be installed either way.
2. On Safelok 1 concrete ties, LAP joints require standard IJ fasteners (Item Number 503-5518 or Item Number 503-6230). See Standard Drawing No. 0432.
3. On Safelok III concrete ties, LAP joints require a specialized IJ insulator (Item Number 503-6170) and clip (Item Number 503-6172).
4. Concrete ties can support any location under the LAP joint as long as the bolts do not interfere with the fasteners.

NOTE: LAP joints must be installed at a staggered spacing in accordance with Figure 4-O. Failure to do so may cause gage issues due to the machined rail head.

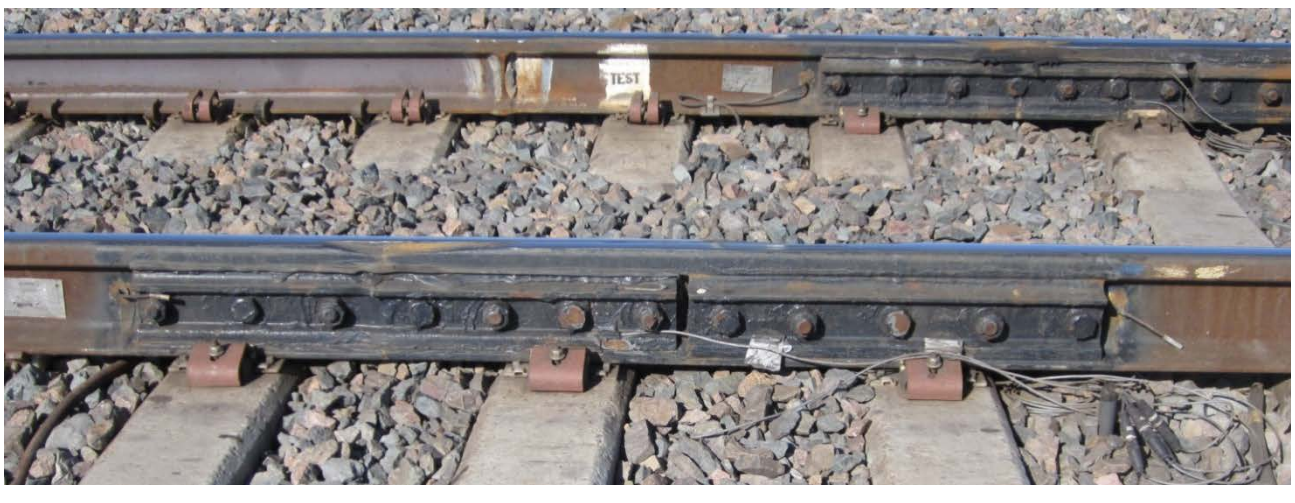

Figure 4-P-1

Requirements for inspection and remedial actions for defective insulated joints are located in Section 8.6.15 Insulated Joint Bar Inspections.

4.11.2 Poly-Coated and Fiberglass Insulated Joints

A. Poly-Coated Insulated Joints

Follow these requirements:

1. Poly-coated insulated joints may be installed in any jointed rail application.
2. Do not install in CWR territories except as a temporary or emergency repair. Reduce track speed to 25 MPH until removed from track.
3. Poly-coated insulated joints may be installed in the turnout side of yard and industry switches in CWR territory.

B. Fiberglass Insulated Joints

Follow these requirements:

1. Install fiberglass insulated joints in jointed rail applications where physical clearances will not allow the installation of poly-coated insulated joints.
2. Do not install in CWR territories under any condition.
3. Do not install in any track where maximum speed exceeds 10 MPH.

4.11.3 I-Bond Installation

When installing I-Bonds (insulated joint rail plugs):

1. Use I-Bonds in all CWR territories where required by the signaling system.
2. Use 18-foot to 29-foot I-Bonds on tangent track and curves up to 1 degree.
3. Use 39-foot I-Bonds where curvature exceeds 1 degree.
4. Crop I-Bonds back in length to allow for future replacement with longer I-Bond rails. I-Bond rail length must remain at least 15 feet.
5. Field weld or In-Track weld I-Bonds in place as soon as possible.
6. On wood ties with cut spike plates, turn spikes so the spike heads face away from the rail to ensure that spikes do not touch any part of the insulated joint.
7. Use insulated tie plates on ties that are within 2 inches of the end post of all insulated joints except armored-type insulated joints.
8. Suspend joints between ties in wood tie track unless an IJ support plate is utilized. See Figure 4-P-2

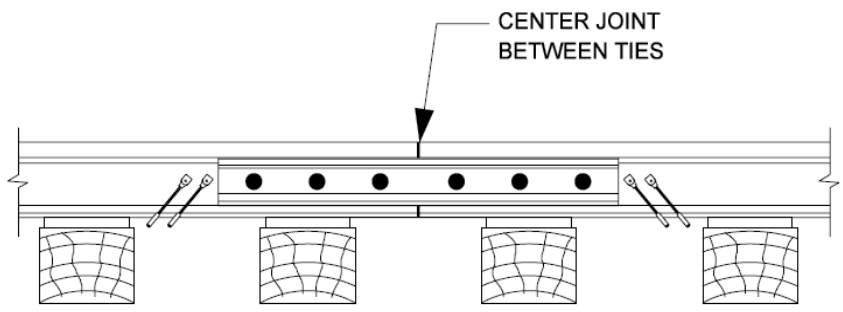

Figure 4-P-2

9. On concrete ties use supported joint tie arrangement and use appropriate clips per the fastening system utilized. See Figure 4-P-3

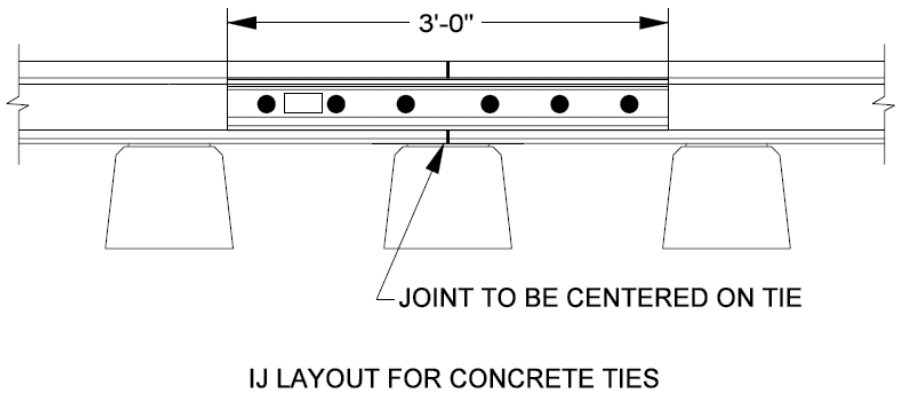

Figure 4-P-3

10. Refer to Standard Track Drawing No. 0960 for further information.

4.12 Cutting Rail

Follow all instructions outlined in the CWR adjust policy. Use reference marks as outlined in Section 7.9.2 Placing Reference Marks.

In addition, refer to the standard work document by searching for, “abrasive rail saw cutting procedures” on the UP Way website at the following address:

https://home.www.uprr.com/mcs_java_swm/secure/jas/SWSHome

1. Equipment must be checked on a regular basis to ensure optimum performance.
   - Obtain necessary testing of equipment from a work equipment mechanic or supplier.
   - Truck or hydraulic power unit must be checked and maintained to ensure proper hydraulic fluid flow rate.
   - Rail saw RPM must be checked to ensure abrasive wheel is turning at the proper speed for the cut.
2. The following are required:
   - Use required PPE.
   - All Safety guards must be in place.

- Spark shields are required during rail cutting operations. Refer to Section 6.3 Fire Protection for complete instructions for fire prevention.
- All required instructions as outlined in the fire prevention policy must be followed.
- Rail must be well supported to prevent the saw blade from binding or breaking.

Approved Abrasive Cut-off Wheels

Item #	Description
411-6352	14” DIA x 1/8”, 1-inch Arbor, Double reinforced, Standard Composition
411-6614	16” DIA x 1/8”, 1-inch Arbor, Double reinforced, Standard Composition
411-6620	16” DIA x 1/8”, 1-inch Arbor, Double reinforced, Premium Composition

4.13 Field Welding (Thermite)

Make all thermite welds according to current procedures in Form 7913, “Instructions for Inspecting, Welding and Grinding of Rail and Track Components”.

In addition, refer to the standard work document for thermite welding on the UP Way website at the following address:

https://home.www.uprr.com/mcs_java_swm/secure/jas/SWSHome

Follow these requirements for making thermite welds:

Thermite Weld Placement;

1. 30 inches from an existing plant weld or in-track weld.
2. Subdivisions with 75 MGT or greater, or as specified by the Chief Engineer, make thermite welds at least:
   - 15 feet from an existing rail joint or thermite weld.
   - For a list of subdivisions that must comply with the 15 foot weld rule, refer to TMP home page link named: “15’ Weld Rule Subdivisions”.

   Note: Special track Work including Switches and Rail Crossings (Diamonds), make welds at least 30 inches from an existing rail joint or weld of any type.
3. Subdivisions with less than 75 MGT or not specified by the Chief Engineer, make thermite welds at least:
   - 30 inches from an existing rail joint or weld of any type.

   NOTE: In order to prevent weld clusters or a multitude of field welds installed closely together, no more than four thermite welds are allowed in a 39’ section of rail.

   NOTE: When installing replacement rail, effort must be made to eliminate thermite welds.
4. Do not make welds:
   - On top of ties.
   - On non-alloy rail when rail temperature is below 5ºF.
   - On alloy rail when rail temperature is below 32ºF.
   - During rain, sleet, blowing snow, or heavy mist.
     - Do not begin the thermite weld process.
     - If the thermite weld process is already in progress, protect the weld from excessive moisture or stop the welding operation.
     - Cover the weld area until the weld has cooled below 700ºF.
     - Use of a rail puller is required anytime there is chance for rail movement.
   - Do not thermite weld rail ends that have been previously ground to accommodate rail end mismatch. Rail end must be cropped to remove tapered area or rail must be replaced.
   - Use a transition rail on 6 inch base rail when rail end mismatch exceeds 1/4 inch.
5. Grade (Road) Crossing Requirements:
   - Installation of new track panel(s) through grade crossings must have rail joints and thermite welds placed no closer than 15 feet from either end of a grade crossing.
   - In an effort to reduce rail /weld defects, when cutting rail, place rail joints and thermite welds as far away as practical from the end of a grade crossing.
   - Distance of rail joints or thermite welds from the end of grade crossing must allow sufficient distance for use of a rail puller when making CWR adjustments.
6. Use reference marks as outlined in Section 7.9.2 Placing Reference Marks.
7. Replacement rail used for maintenance welding must be at least 15 feet in length and meet the following guidelines:
   - Vertical height difference from existing rail must not exceed 1/4 inch.
   - If vertical offset is more than 1/4 inch, a transition or taper rail must be installed.

- Torch cut rail ends must have at least 2 inches removed with an abrasive rail saw.
- Rail must be certified per Section 4.18.7 Maintenance Replacement Rail Certification.
- Thermite welds are not allowed to be in length of replacement rail.

8. Crop rail to eliminate bolt holes and bond pin holes in rail ends where the centerline of the hole is:
   - Closer than 6 inches to the rail end when making welds that does not require reinforcing straps.
   - Closer than 8 inches to the rail end when making welds that require reinforcing straps.
   - Remove signal bond wires by grinding only. Use of a chisel is not allowed.
9. De-burring Bolt Holes
   - De-burr and bevel bolt holes immediately after drilling is completed.
   - Use only the following approved abrasive wheel to de-burr and bevel bolt holes
     - 2” x 3” 5/8-11 arbor (Item Number 411-3867)
   - If no indication of de-burring or beveling is evident, this must be completed before the thermite welding process begins.
   - Inspect bolt holes for signs of cracks before beginning the thermite welding process.
10. Torch cut rail:
    - Any time rail is cut using a torch, do the following;
    - Use a rail saw to trim the torch cut rail end square immediately after the torch cut is made to eliminate the growth of deep thermal cracks.
    - All indication of torch cut must be removed.
    - If a rail saw is not used to square the torch cut rail end within 15 minutes after the initial torch cut is made, an additional 2 inches of rail must be removed from rail end to get past thermal crack growth formed as the rail end cools.
11. Rough grinding can begin after weld shearing is completed to reduce the height of excess weld material to approximately 0.030 inch, but must allow for weld shrinkage as metal cools.
12. Gage face mismatch must be ground to provide for a uniform transition using the following formula.

    Welds with gage face mismatch shall be finish blended over the length of transition of which the minimum length is determined by the following formula below. See Table 4-N-1 below.

$$\text{Minimum Taper Length (feet)} = \frac{\text{Offset (thousandths of an inch)}}{0.008 \text{ inches}}$$

Gage-face Mismatch	Mismatch Taper
0.030 inch	4 inches
0.060 inch	8 inches
0.090 inch	12 inches
0.125 inch	16 inches

Table 4-N-1

13. Finish grinding the top of the weld must be completed after the weld has cooled to below 700°F. Do not grind onto the parent rail unless vertical offset is present. Doing so will result in a low weld.
    - Additional effort may be necessary to allow more radius relief on the field side of a thermite weld when rail exhibits excessive wheel/rail contact.
14. Apply a 30 MPH slow order when thermite welding alloy rail for a minimum of 24 hours after completion of the weld. Do not remove the slow order until the thermite weld is visually inspected and weld reinforcing straps are applied.
15. The Engineering Department requires the placement of weld tags on all welds.

    The following items can be ordered through the eProcurement system.

Item #	Description
412-7660	Silicon Adhesive, 6oz. tubes, Railtech
410-5260	Metal punch, 1/8 inch hole diameter, for use with Engineering Weld Tag

Thermite weld tags will be punched to indicate the following:

1. Employee ID
2. Month and year installed
3. Month and year weld manufactured
4. 1-inch or wide gap

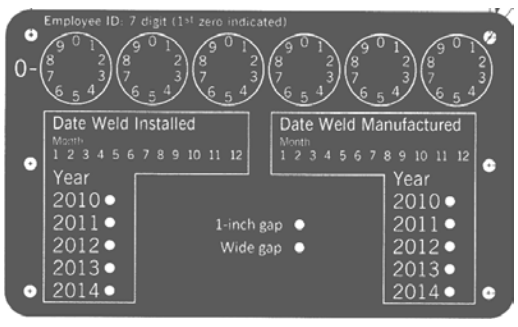

Install the weld tag supplied by the manufacturer on the web of the rail. Placement of the weld identification tag will be on the field side of the rail web beyond the required CWR written information, as shown in the illustration below and applied with a silicon adhesive, see Figure 4-Q-1.

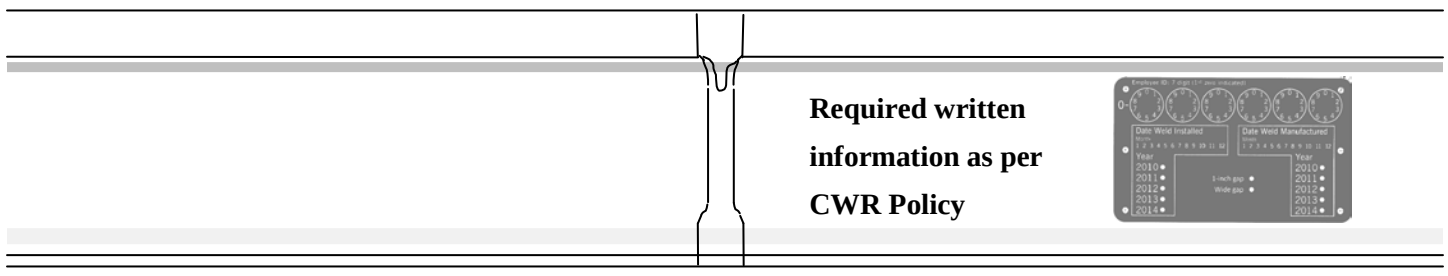

Figure 4-Q-1

16. In Class 6 and higher track, all thermite welds must be ultrasonically inspected within 30 days of installation. Inspection must not be conducted less than one day after weld is installed.
17. In Class 6 and higher track, all finished thermite weld tolerances will be measured and reported in the Welding Time and Attendance Production Reporting System. Refer to 4.16 Weld Tolerance Specifications.

4.14 Reinforcing Weld Straps

Apply weld reinforcing straps to thermite welds under any of the following conditions:

a) Any compromise thermite weld made on rails with different size rail bases.

b) Any thermite weld involving alloy rail. (Head hardened rail is **not** alloy rail).

Reinforcing straps must be fully bolted and kept tight. Never use reinforcing weld straps in place of joint bars.

4.15 In-Track Welding

The following instructions must be adhered to when making all Electric Flash Butt (EFB) welds utilizing In-Track Welder (ITW) equipment according to current procedures in Form 7913, “Instructions for Inspecting, Welding and Grinding of Rail and Track Components”.

1. Do not make welds:
   - On top of ties - Ensure finished weld is in the tie crib.

     Exception: Welds made out of track may be installed on ties when the underside and sides of the weld base have been ground smooth.
2. Refer to Section 7.9.2 Placing Reference Marks when installing welds with an In-track welder.
3. Flash butt welding is prohibited during rain or heavy snow.
   - Welding supervisor or welding manager will determine if conditions are safe for operation. Welding is permitted when the web of the rail can be heated, dried and kept dry until the weld is completed.
4. Replacement rail used for maintenance welding in an in-track operation must be at least 15 feet in length and meet the following guidelines:
   - Vertical height difference from existing rail must not exceed 1/4 inch.
   - If vertical offset is more than 1/4 inch, a transition or taper rail must be installed.
   - Replacement rail with torch cut ends must have at least 2 inches removed with an abrasive rail saw.
   - Thermite welds must be removed when practical.
   - Rail must be certified per Section 4.18.7 Maintenance Replacement Rail Certification.
   - 6 inch base rail older than 1975 and 5-1/2 inch base rail older than 1960 is marked UT Limited. UT Limited rail can only be used when the replacement rail is newer than the existing rail in the track.
5. All bolt holes remaining in track must be de-burred and beveled with appropriate abrasive grinding stone. (Refer to Section 4.13-9 De-burring Bolt Holes).
   - Do not EFB weld alloy rail.
   - If the current weld has to be cut out and re-welded:
     a. Cut the rejected weld with a rail saw and re-weld at any time or,
     b. Immediately cut the rejected weld with an oxy-fuel torch and re-weld within 30 minutes.
   - Torch cut rail ends or re-welds made in track must be trimmed with an abrasive rail saw within 30 minutes before a Low Consumption Weld (LCW) is made.
   - If a Low Consumption Weld cannot be made within 30 minutes of the initial torch cut, rail ends must be cut back 2 inches with an abrasive rail saw.
6. Train traffic or heavy work equipment (spikers, tampers, ballast regulators, etc.) must not be allowed over an EFB weld until:
   - The running surface and gage face are rough ground to within 0.030 inch.
   - The weld has cooled below 700°F.
   - All wedges, jacks and blocks are removed.
   - The weld is supported by a tamped tie on each side of the weld.
7. Finish grinding:
   - Do not over grind welds. Do not grind off the weld onto the lower rail when welding rails with vertical offset. Taper welds with vertical offset as per instructions in 4.16 Weld Tolerance Specifications.
   - Do not grind into the parent metal if no mismatch is evident.
   - Weld must be ground smooth to within 1/16 inch of the original contour of the web and fillets.

- Top of rail base must be ground to within 1/16 inch of the original contour with the sides ground smooth.
- When using an external stripper or shear for removing the upset, inspect the clamp area on the web for gouges or smear. All smears must be ground from welds. All gouges in the parent metal must be rejected.
- All welds must have a weld chart or be rejected.

8. The Engineering Department requires the placement of weld tags on all mobile in-track welds.

   The following items can be ordered through the eProcurement system.

Item #	Description
412-7661	Weld tag for In-Track Welders only, 500 tags per pack
412-7660	Silicon Adhesive, 6oz. tubes, Railtech
410-5260	Metal punch, 1/8 inch hole diameter, for use with Engineering Weld Tag

   In-track weld tags will be punched to indicate the following:

   - Welding employee ID number
   - Weld type
   - ITW machine number
   - ITW weld number
     a. Consecutive number starting the first of each year
   - Month and year weld installed

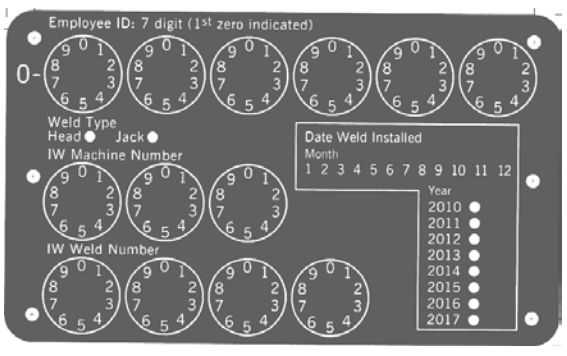

   Install the weld tag on the web of the rail. Placement of the weld identification tag will be on the field side of the rail web beyond the required CWR written information, as shown in the illustration below and applied with a silicon adhesive, see Figure 4-Q-2.

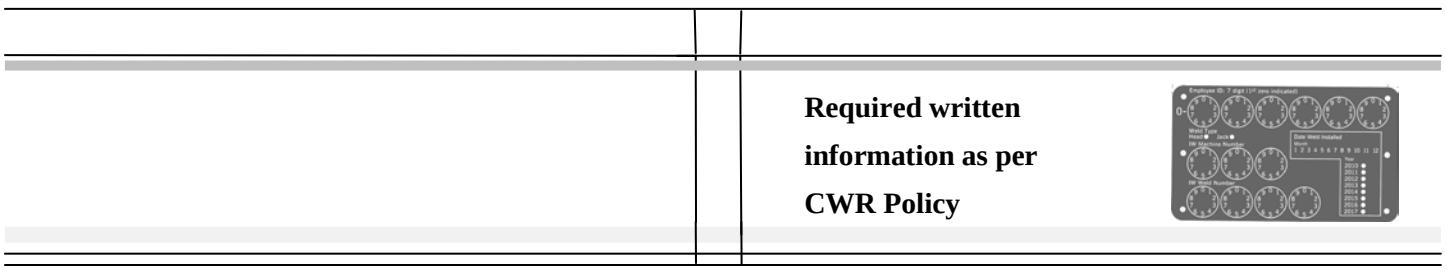

Figure 4-Q-2

9. In Class 6 and higher track, all in-track weld tolerances will be measured and reported in the In-Track Weld Production Reporting System. Refer to 4.15 Weld Tolerance Specifications.

4.16 Weld Tolerance Specifications

To improve overall track geometry and reduce Evaluation Car exceptions, the Thermite and In-Track maximum weld tolerances below must be followed.
Where one tolerance is shown, the measurement applies to both types of welds.
These are cold (ambient temperature), finish ground specifications.

1. Use Table 4-N-1 to determine weld tolerance specifications for Class 1 through Class 5 Tracks.

	Vertical Crown	Vertical Offset	Horizontal Offset	Horizontal Kink	Base (HOS) Horizontal Offset	Base (VOS) Vertical Offset
Thermite	0.040”	0.040” (a)	0.040”	0.025”	0.060”	0.250” (c)
In-Track	0.060”	0.125” (b)				0.125” (d)

(a) Line top of rail
(b) 0.060” if rail base is not offset – 0.125” if necessary to maintain base vertical offset (worn rail) – Grind top of rail and taper transition.
(c) 0.000” to 0.125” with standard mold – 0.125” to 0.250” with offset mold (Same Base Width).
(d) If rail height difference is greater than 0.125”, offset top of rail head and grind (See “b” above).

Combined Vertical crown and Offset: 0.060 inch maximum expressed as tangential deviation 18 inches from the center of weld.

Combined Horizontal Kink and Offset: 0.060 inch maximum expressed as tangential deviation 18 inches from the center of weld.

Table 4-N-1

NOTE: Maximum allowable rail end mismatch is 0.250” on same base width. Transition rail to be used on rail end mismatch greater than 0.250” on the same base width. ***Over grinding is not allowed.***

Welds with vertical offset of the rail head shall be finish blended over a ramp of which the minimum length is determined by the following formula. See Table 4-N-2 below.

$$\text{Minimum Ramp Length (feet)} = \frac{\text{Offset (thousandths of an inch)}}{0.008 \text{ inches}}$$

Vertical Offset	Offset Ramp Length
0.030 inch	4 inches
0.060 inch	8 inches
0.090 inch	12 inches
0.125 inch	16 inches

Table 4-N-2

While blending the offset ramp, care must be taken to avoid sharp deviations in transition, avoiding locations of impact loading.

2. Use Table 4-O-1 to determine weld tolerance specifications for Class 6 Tracks, High Speed Mainlines, (Joliet and Springfield Subdivisions Only).

	Vertical Crown	Vertical Offset	Horizontal Offset	Horizontal Kink	Base (HOS) Horizontal Offset	Base (VOS) Vertical Offset
In-Track	0.030”	0.125” (a)	0.030”	0.025”	0.060”	0.125”(b)

(a) 0.060” if rail base is not offset – 0.125” if necessary to maintain base vertical offset (worn rail) – Grind top of rail and taper transition.
(b) If rail height difference is greater than 0.125”, offset top of rail head and grind (See “a” above).

Combined Vertical crown and Offset: 0.060 inch maximum expressed as tangential deviation 18 inches from the center of weld.

Combined Horizontal Kink and Offset: 0.060 inch maximum expressed as tangential deviation 18 inches from the center of weld.

Table 4-O-1

NOTE: Maximum allowable rail end mismatch is 0.250” on same base width.

Transition rail to be used on rail end mismatch greater than 0.250” on the same base width. ***Over grinding is not allowed.***

Welds with vertical offset of the rail head shall be finish blended over a ramp of which the minimum length is determined by the following formula. See Table 4-O-2 below.

$$\text{Minimum Ramp Length (feet)} = \frac{\text{Offset (thousandths of an inch)}}{0.008 \text{ inches}}$$

Vertical Offset	Offset Ramp Length
0.030 inch	4 inches
0.060 inch	8 inches
0.090 inch	12 inches
0.125 inch	16 inches

Table 4-O-2

While blending the offset ramp, care must be taken to avoid sharp deviations in transition, avoiding locations of impact loading.

4.17 Rail Anchors

Rail anchors control longitudinal rail movement on ties from temperature variations, traffic, grade, and train braking.

Anchors are not required on ties with elastic fastening systems unless additional restraint is necessary to control undesired rail movement or ties are in a turnout.

On CWR installations completed before September 21, 1998, existing anchoring may remain if rail is restrained to prevent track buckles, but rail must be adjusted (by increasing or decreasing the length of rail or by lining on curves) or anchors added to rail if restraint is not sufficient.

In turnout tie or component replacements existing anchoring pattern may remain if rail is restrained to prevent track buckles, but rail must be adjusted (by increasing or decreasing the length of rail or by lining on curves) or anchors added to rail if restraint is not sufficient.

Note: Locations with permanent speed restrictions must have anchor patterns based on a subs predominant class of track.

4.17.1 Anchor Types

The two rail anchor types commonly used are Drive-on and Wrench. Within these types are a number of different styles and sections.

- Drive-on type anchors are manufactured in channel sections, solid bar stock steel, and T- sections. See Figure 4-R-1.

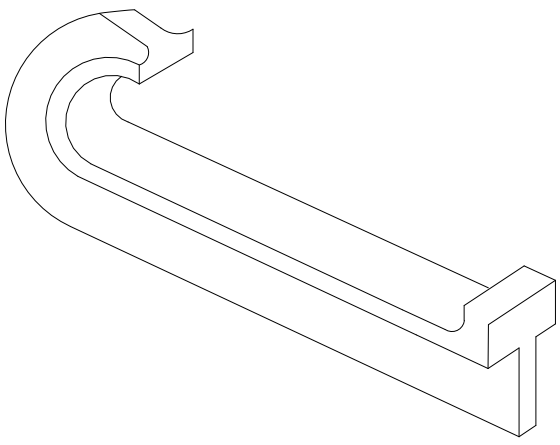

T-SECTION ANCHOR

Figure 4-R-1

- Wrench type anchors are manufactured from spring steel and are commonly referred to as spring anchors. They are available in a variety of shapes. An example is pictured in Figure 4-R-2.

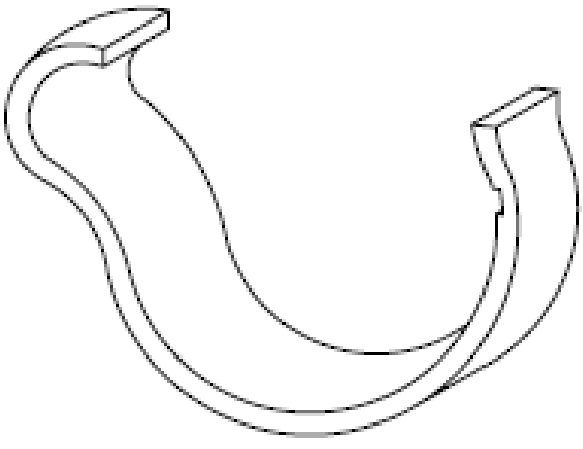

SPRING ANCHOR

Figure 4-R-2

- Concrete tie anchors are drive-on type bar stock anchors with a specially designed nylon isolator (Item Number 550-1653) over the anchor to prevent damage to the tie. The item number for the anchor w/isolator is 550-1652. An example is pictured in Figure 4-R-3.

CONCRETE TIE ANCHOR WITH ISOLATOR

Figure 4-R-3

4.17.2 Anchor Applications

Determine the kind of replacement anchor for rail relays on wood and composite ties as follows.

1. Use new anchors:
   - When laying new rail on any track.
   - Rail relays in main track and siding with track speed of 30 MPH and over.
   - In place of second-hand anchors when not available.
2. Use second-hand anchors:
   - For ordinary maintenance.
   - To replace missing or ineffective anchors from existing patterns.
   - On every other tie where every tie must be box anchored (95 MGT and above).
   - On secondhand rail relays less than 30 MPH.
   - On secondhand rail relays when track speed is 30 MPH and over, when approved by the Chief Engineer.

4.17.3 Anchor Installation

Properly installed rail anchors provide maximum restraint against rail movement.

Second-hand anchors should be inspected before and after installation to ensure they fit the rail properly.

Rail anchors should be applied just far enough that the locking lip or groove of the anchor snaps into place on the rail base. Where drive-on type anchors are applied by mechanized equipment, allow a dime-width of space between the rail base and the anchor (shown in Figure 4-R-4) to compensate for base width tolerances of the rail.

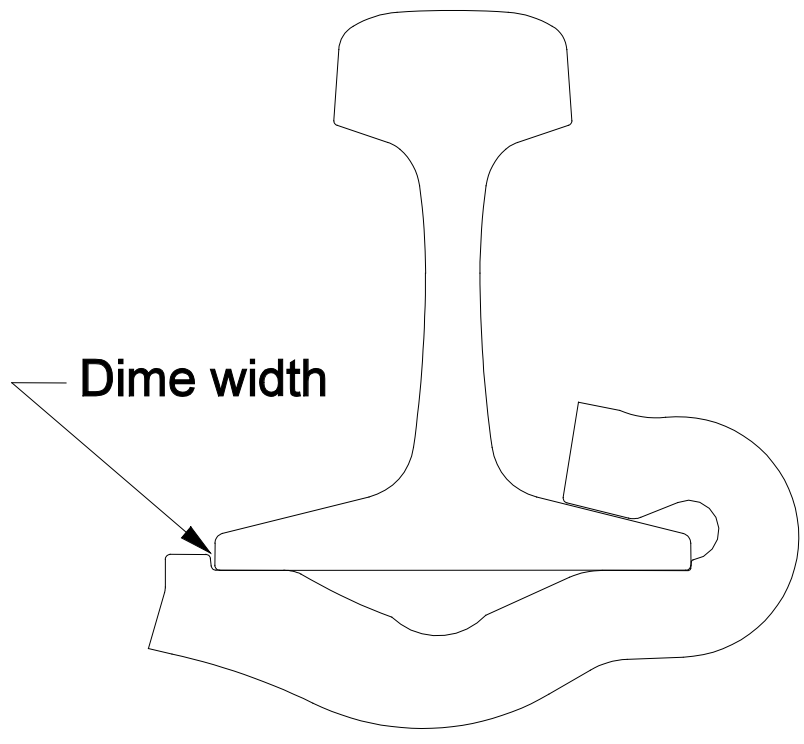

Figure 4-R-4

When installing rail anchors:

1. Apply rail anchors of the same size as the rail base.
2. If installing or removing drive-on type anchors manually, use a sledge hammer.
3. Apply wrench type anchors only when you use a wrench tool designed for that purpose.
4. Apply anchors at a right angle to the rail base.
5. Where practicable, install the anchor from the gauge side of rail.
6. Apply on each side of the tie across from one another with full bearing against the sides of the tie.
7. Do not install rail anchors on the rail across from permanent joints, except when box anchoring switch ties in turnouts.

   NOTE: Anchors not applied to one rail must not be applied to the opposite rail on the same tie at locations other than turnouts.

8. Box anchor each tie on each side of a field weld.
9. Box anchor switch ties to the fullest extent possible.
10. Avoid installing rail anchors within 1 inch of:
    - Field welds.
    - Joint bar ends.
    - Switch rods on turnouts.
    - Transducers on hot box detectors.

4.17.4 Standard Box Pattern

Follow these requirements:

1. On all tracks, apply rail anchors out-of-face along each rail, directly across from each other on the same tie, according to Rail Anchor Pattern No. 1 shown in Figure 4-S-1.

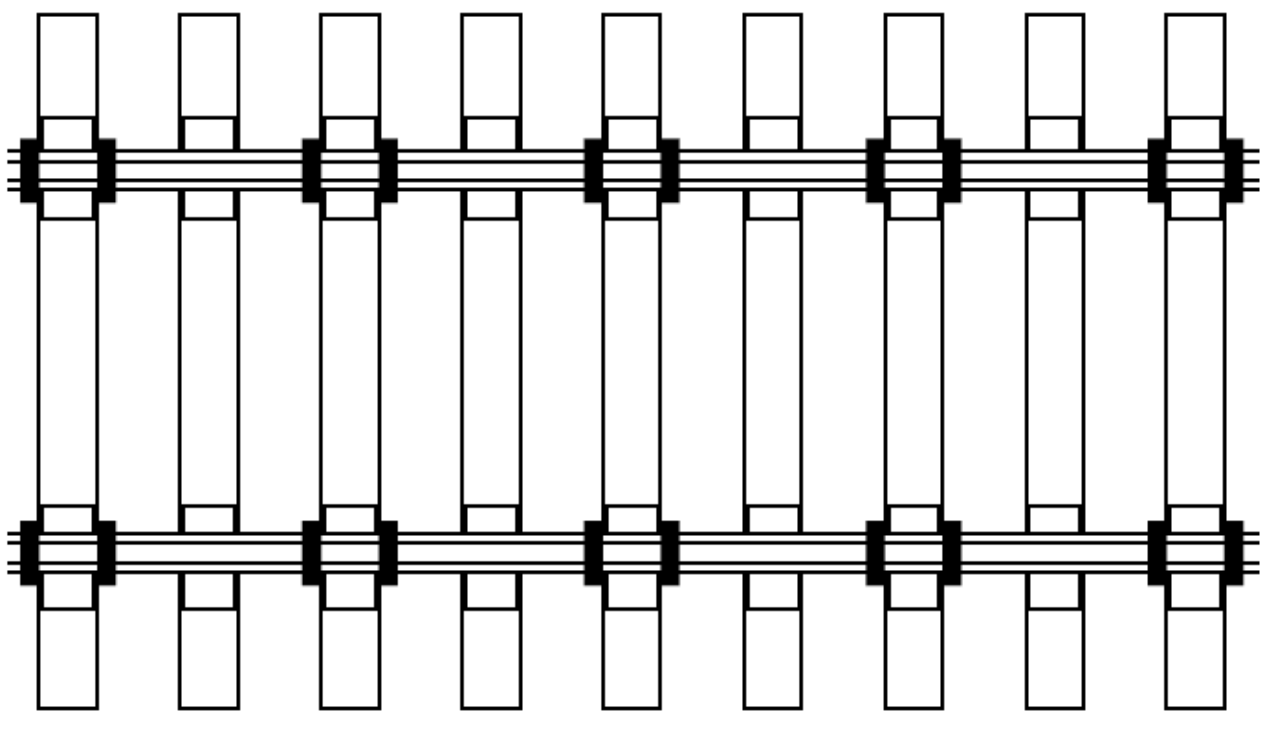

ANCHOR PATTERN NO. 1

Figure 4-S-1

2. Establish the standard rail anchor pattern shown above on both rails throughout relay limits and for 5 rail lengths on either side of the work limits during:
   - Single- or double-side rail relays.
   - Double curve rail transpositions.
3. Additional rail anchors may be required to provide additional longitudinal rail restraint.

4.17.5 Solid Box Pattern

Follow these requirements:

1. Solid box anchor every tie as shown in Figure 4-S-2 for Rail Anchor Pattern No. 2 at specific locations to provide additional restraint against rail movement.

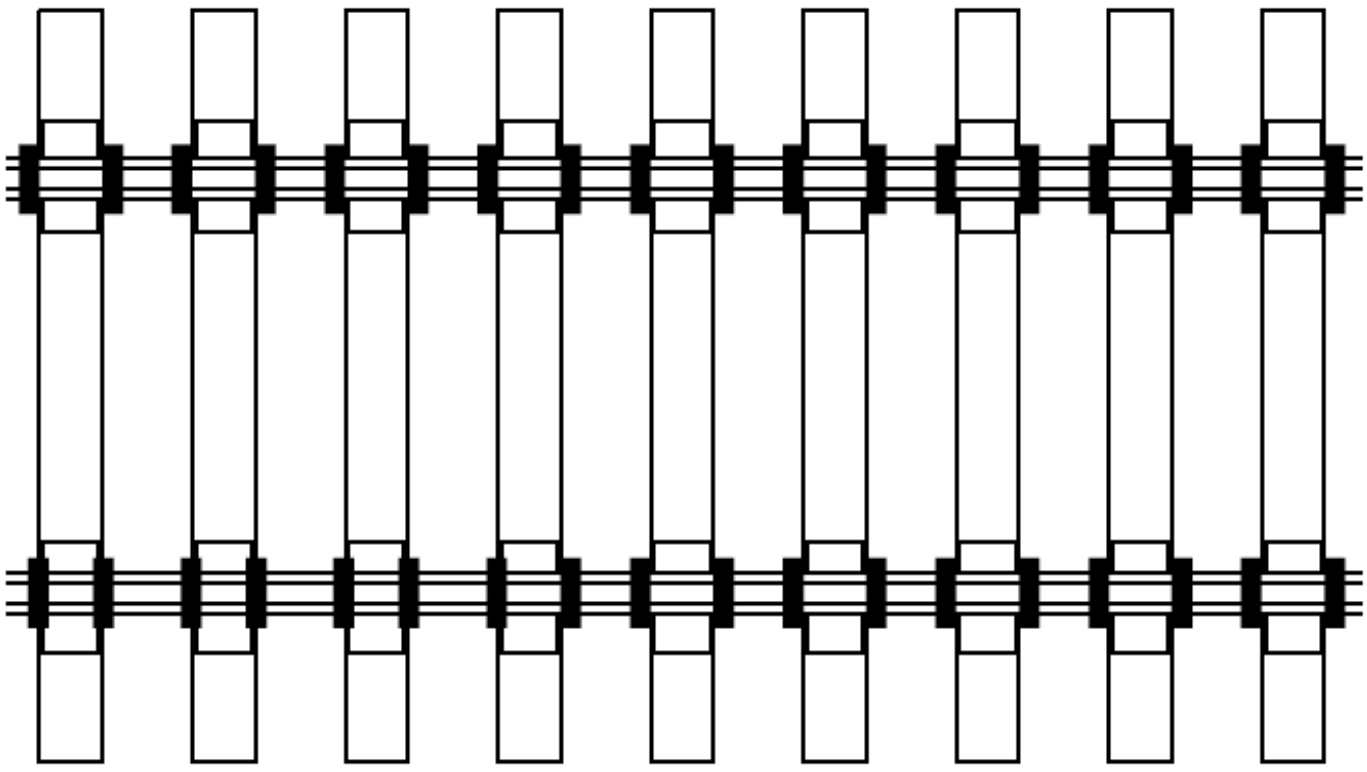

ANCHOR PATTERN NO. 2

Figure 4-S-2

2. Use Table 4-P to determine where box anchoring of every tie is required in wood, composite and concrete tie track. For composite ties, follow the same standards as for wood ties. Also reference Standard Drawing No. 0460.

Location	Rail Type	Requirement
Turnouts (Concrete and Wood Ties)	CWR	All switch ties and 120 ties in all directions
Turnouts (Wood Ties Only)	Jointed	All switch ties and 48 ties in all directions
Crossing Frogs (Concrete and Wood Ties)	CWR or Jointed	120 ties in all directions
Hot Box / Dragging Equipment Detectors (Wood Ties Only)	CWR or Jointed	120 ties in each direction
All Permanent and Insulated Joints (Wood Ties Only)	CWR	120 ties in each direction
Expansion Joints (Concrete and Wood Ties)	CWR or Jointed	120 ties in each direction
Lines with traffic of 95 MGT or more annually (Wood Ties Only)	CWR	Every tie, as directed by Chief Engineer
Open-Deck Bridges (Concrete and Wood Ties)	CWR	All bridge ties and 120 ties in each direction EXCEPTION: See Standard Drawing 0461 for steel spans.
Road Crossings (Wood Ties Only)	CWR or Jointed	Every tie through the crossing limits

Table 4-P

4.17.6 Bridge Pattern

Follow these bridge anchoring requirements:

1. Ballast deck bridges should be anchored according to Standard Drawing No. 0461.
   - Anchor ballast deck bridges with the same pattern as the rail leading onto the bridge.
2. Open deck bridges should be anchored according to Standard Drawing No. 0461.
   - Solid box anchor every bridge tie across open-deck bridges and 120 ties each side of bridge headwalls.

     Exception: For steel spans more than 125 feet long:

     – Box anchor all bridge ties in at least one-third of the total number of panels of the bridge at the fixed end of the span.

4.17.7 Turnout Pattern

Follow these turnout anchoring requirements:

1. Box anchor all switch ties to the extent that the anchors will not interfere with the proper operation of the turnout. Refer to Standard Drawing No. 0460.
2. Anchor the switch point and stock rail at the heel block as follows:
   a. Locate the heel blocks on the mainline and turnout sides, refer to Figure 4-T-1.
   b. Anchor the switch point and stock rail on the mainline side as follows:
      i. Begin by installing two anchors next to one tie and two additional anchors next to the other tie in a crib.

         NOTE: Solid anchoring of a single crib will require 6-8 anchors.

      ii. Continue to apply anchors to fill in area between the first four anchors installed.

         CAUTION: Ensure anchors are tight against the edge of ties with no gaps. If a gap is too small to be filled with an anchor ensure that gap is in the middle of the anchors.

   c. Repeat step b for the switch point and stock rail on the turnout side.
   d. In turnouts that utilize a Movable Point Frog the same pattern in the heel block area can be utilized to limit rail movement in the frog. Fully anchor the MPF as shown in Figure 4-T-2. Care must be taken to not place anchors where they may interfere with point movement. Locations shown may be adjusted, however both point and wing rails must have minimum of one crib on each side fully box anchored.

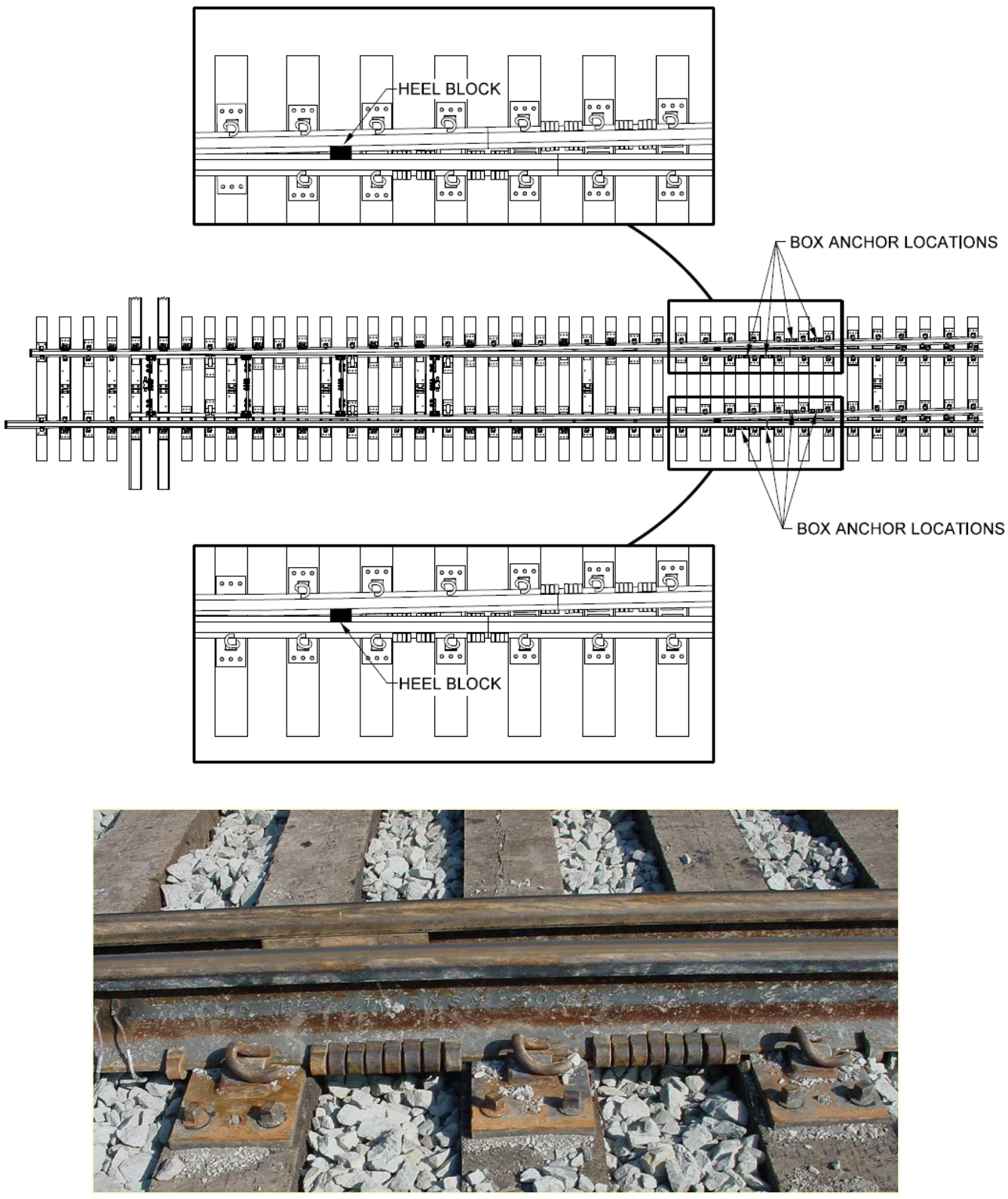

Figure 4-T-1

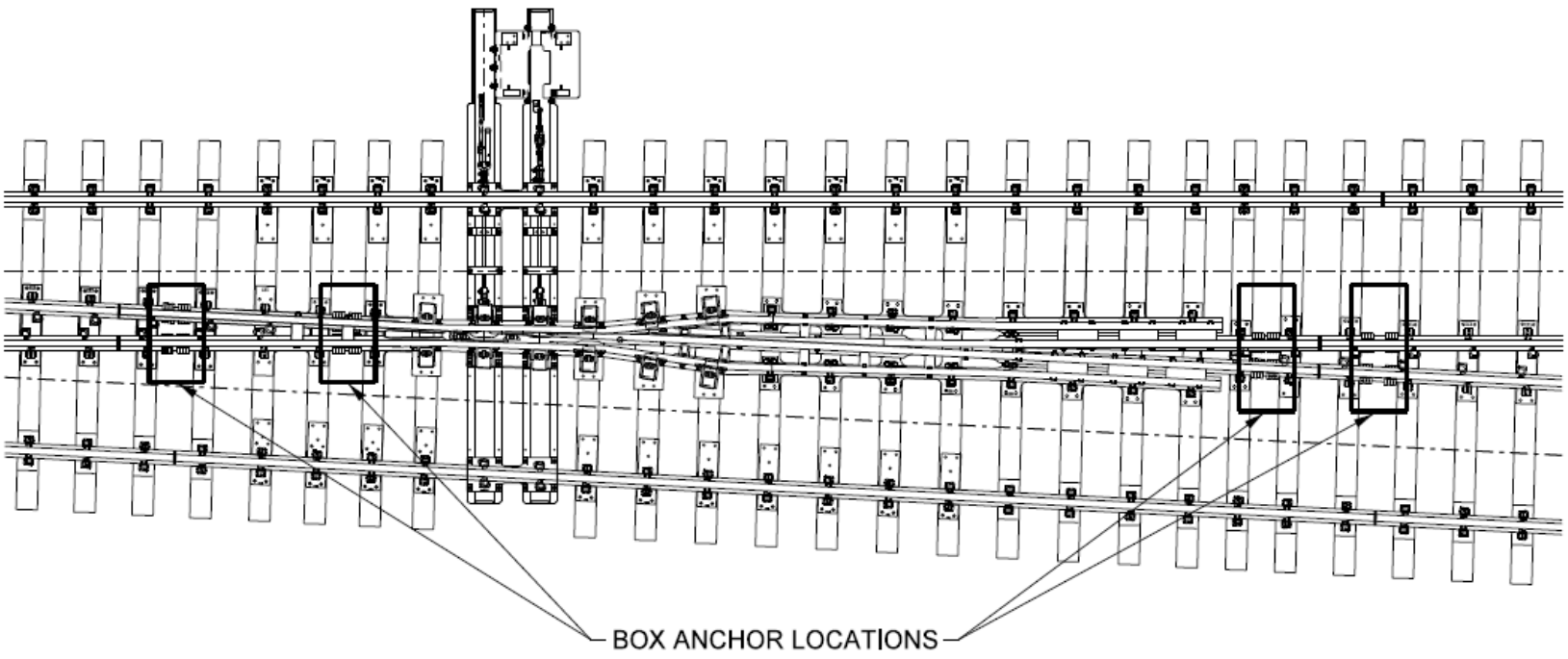

Figure 4-T-2

4.17.8 Transition Pattern

Transition anchor pattern at locations where CWR connects to jointed rail as shown in Figure 4-U.

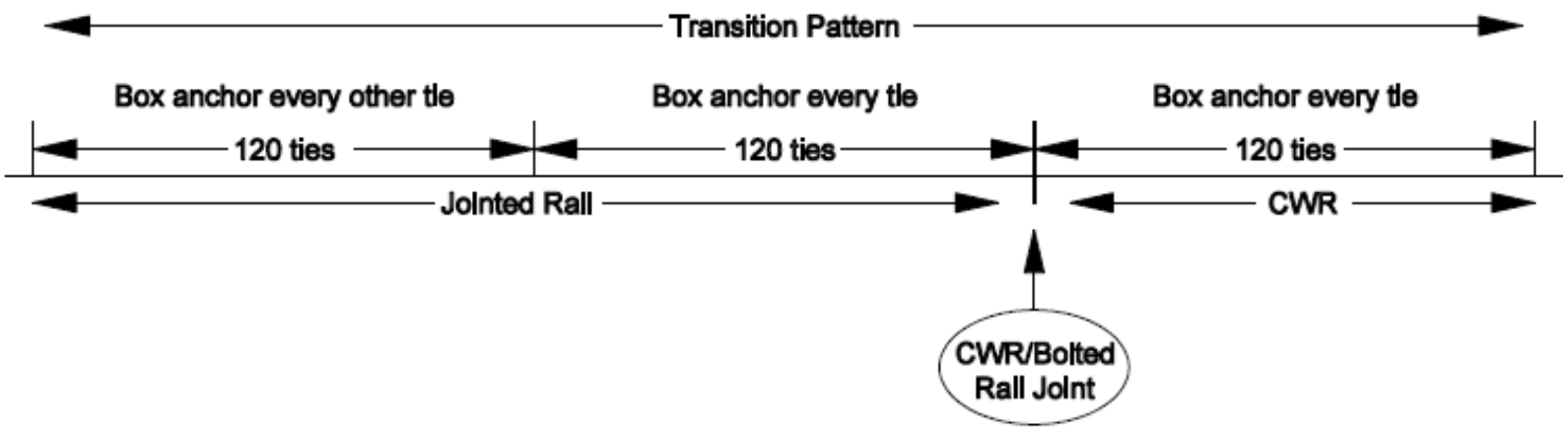

Figure 4-U

When transitioning from CWR to jointed rail:

1. Solid box anchor the CWR for 120 ties before the jointed rail.
2. Solid box anchor the first 120 ties in the jointed rail next to the CWR.
3. Box anchor every other tie in the next 120 ties in the jointed rail next to the 120 solid box anchored ties.

4.17.9 Adjustment and Maintenance of Rail Anchor Patterns

Adjust and maintain rail anchors and their patterns as follows:

1. When relaying rail on one side only adjust the anchors on the other rail to the standard anchor pattern.
2. Replace broken, damaged, missing or otherwise ineffective rail anchors during track maintenance.
3. Adjust rail anchors to provide full bearing against the side of ties during track maintenance.
4. Reapply rail anchors removed during track maintenance.
5. Restore the existing rail anchor pattern when eliminating or relocating joints. Add, remove, or relocate anchors as required.
6. Do not slide anchors along the rail except when adjusting with power-operated equipment.

4.18 Rail Defects

4.18.1 Defect Descriptions

Subsections A through R show the common rail defects and their associated abbreviations.

A. Bolt Hole Break (BH)

A bolt hole break is a progressive crack that spreads in any direction from a bolt hole. This defect is caused by contact between the bolt hole and a bolt. See Figure 4-V.

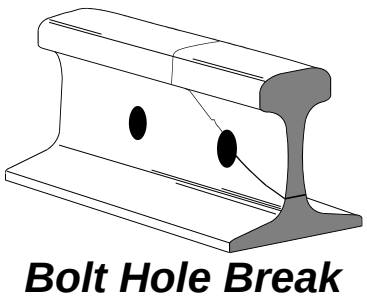

Bolt Hole Break

Figure 4-V

B. Broken Base (BB)

Any type of defect in the base of the rail is called a broken base rail. The cause of this defect is the rail bearing unevenly on the tie plate. The cause of this defect may be the rail bearing unevenly on the spike, tie plate, spike, etc. These defects may also be caused by corrosion or impacts to the base. See Figure 4-W and pictures below:

Broken Base

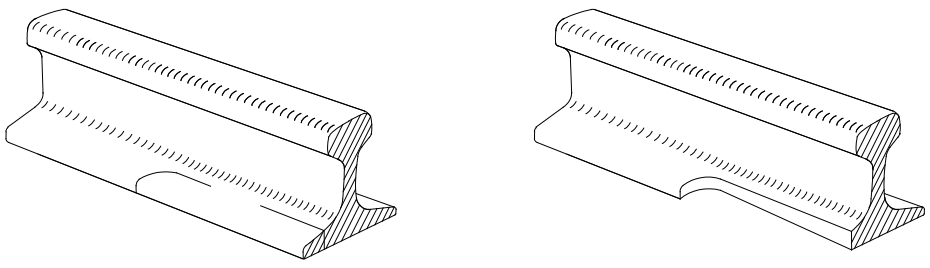

Figure 4-W

Broken Base – Transverse *Photo Examples of Broken Base - Transverse*

C. Crushed Head or Flattened Rail (CH or FR)

A crushed head (sometimes referred to as flattened rail) is a short length of rail that has flattened out across the entire width of the rail head with no repetitive or regular pattern. See Figure 4-X.

NOTE: Do not classify corrugations or battered rail ends as crushed heads.

Measurements will not include localized chips or pitting.

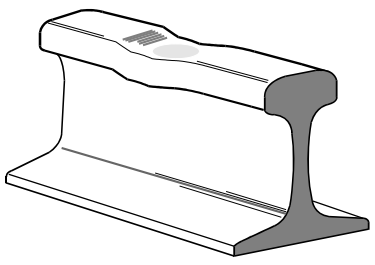

Crushed Head or Flattened Rail

Figure 4-X

D. Shell, Sliver Corrugation (SSC) and Battered Weld SSC (SSC-W)

Definition: Shell, Sliver, Corrugation are locations where, rail defects may originate or may be hidden under surface conditions. These defects are at risk of not being detected by ultrasonic test systems. SSC defects are usually localized surface conditions between 8-inches and one rail length. SSC-W (Battered Welds SSC) defects usually begin within 6" of welds. See examples below:

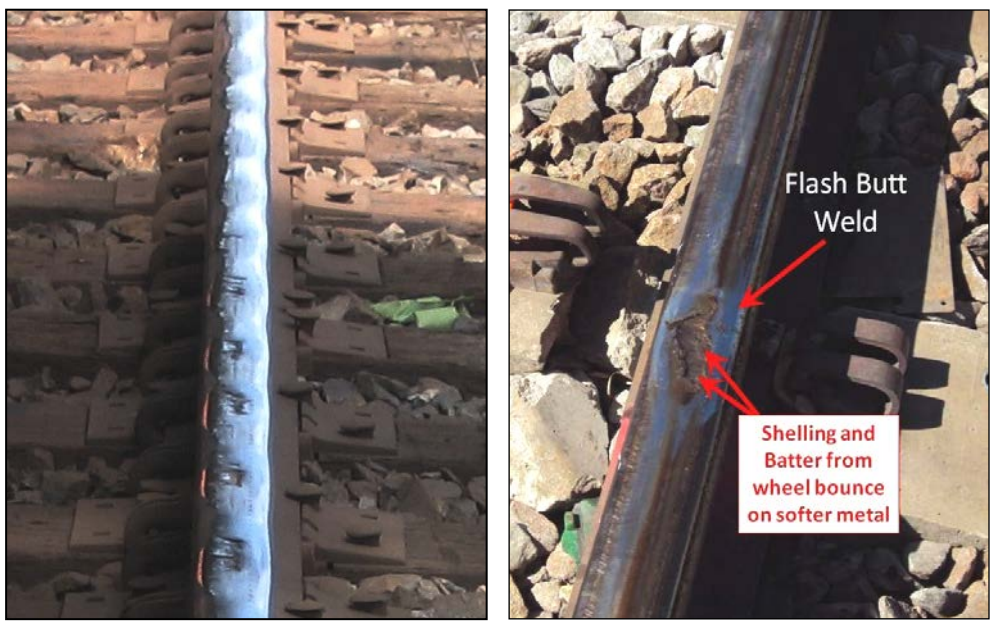

SSC (Shell, Sliver, Corrugation) condition can be identified by any one qualified to inspect track. Visual observation of rail condition (excessive spalling, corrugation, head check or shelling) and general track condition (ballast churned out of the cribs, swinging ties, rail out of the plate, battered ties, etc.) are all indications that a SSC condition may exist.

When it is determined by visual observation that a SSC condition may exist, an on the ground inspection must be made.

Any area where rail head deformation is ¼ inch or more below the running surface of the adjacent rail head and other more restrictive defects are not present must be marked as a SSC defect. For example, if you slide a 36” straight edge on top of the rail, any location along the straight edge that you can place a ¼ inch step gauge under the straight edge, you have a defect. If rail surface conditions are persistent down the length of the rail, continue to move the straight edge along the rail until conditions no longer exist. Measurements shall not include localized chips or pitting.

If the rail is worn and has ¼ inch head loss, the wear will be much more gradual and will not show up as a defect. Examples of more restrictive defects would be a visible VSH, a flattened rail or break out in the head of the rail.

Pay particular attention to head sag or deflection, “bleeding” rust areas, excessive head flat and corrugation. Corrugation deeper than .030 (about the thickness of a dime) should be considered an SSC.

In addition to visual detection, a SSC defect can be identified during rail test operations. Poor rail surface conditions may cause false response (multiple channel surface indications) or lack of expected response (loss of bottom signal, failure to properly indicate bolt holes or other known track structures). These rail surface conditions may prevent performance of a continuous ultrasonic test and result in rail defects not being detected. Locations where these rail surface conditions exist require an on the ground inspection. All ultrasonic indications that appear to be a rail defect must be hand tested and entire area visually inspected. Defects identified during this inspection must be properly marked and remediated. If it is determined during inspection that a continuous ultrasonic inspection cannot be performed due to rail surface conditions the area must be marked as an SSC defect.

As with all types of rail defects, pay particular attention at rail ends, dead zones in switches and within 500 feet of structures (bridges, over passes, tunnels, etc).

E. Defective Weld (DPW, DFW, DIW, DWG)

A defective weld is a progressive fracture at or near any weld. This may occur in plant welds, in-track welds and thermite welds. See Figure 4-Y.

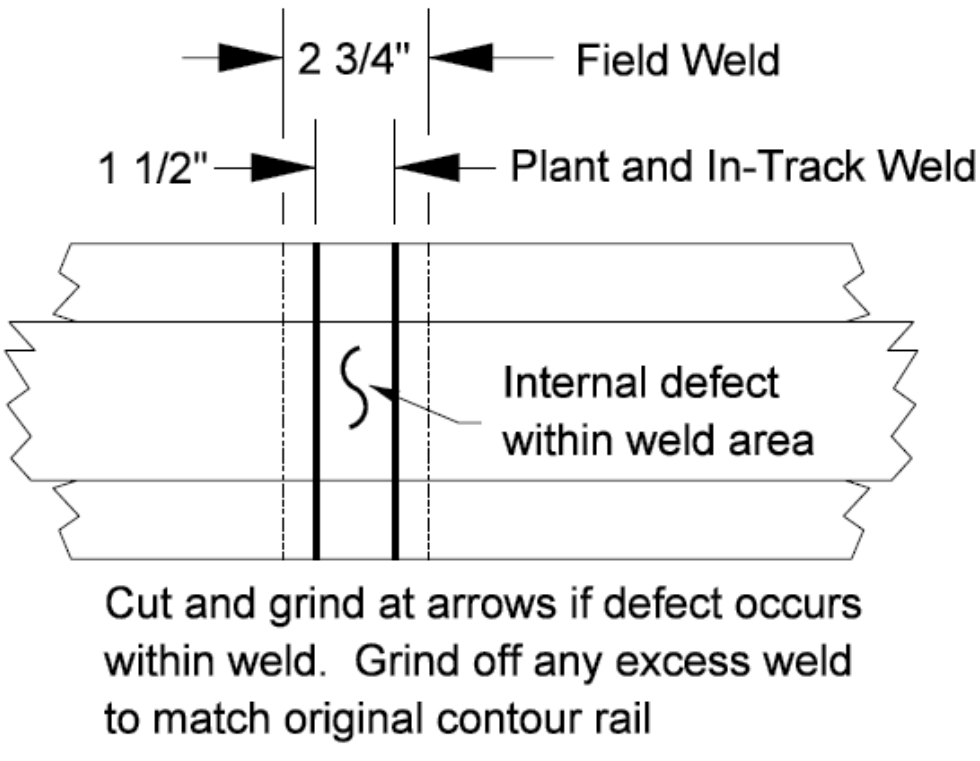

Figure 4-Y

NOTE: When a detector car identifies a defective weld, cut out the weld and apply joint bars or field weld immediately. Cut out a defective plant weld by removing a 1-1/2-inch section of the rail, 3/4 inch on either side of the centerline. Cut out a defective field weld by removing a 2-3/4-inch section of the rail, 1-3/8 inches on either side of the centerline. If field welding, ensure the final gap width is 1 inch for standard welds or 2-3/4 inches for a wide gap weld.

F. Engine Burn Fracture (EBF)

An engine burn fracture is a progressive fracture starting at the spot where locomotive driver wheels have slipped on top of the rail head. When these fractures spread downward, they resemble compound or transverse fissures. See Figure 4-Z.

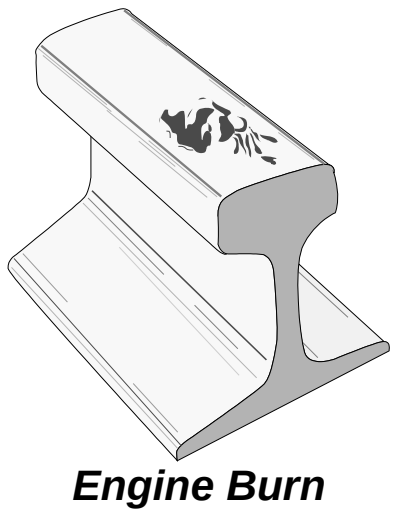

Engine Burn

Figure 4-Z

G. Head-Web Separation (HW)

A head-web separation is a progressive longitudinal fracture under the rail head that separates the head from the web. See Figure 4-AA.

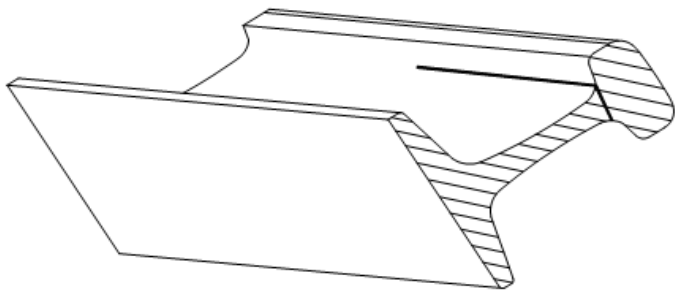

Head-Web Separation

Figure 4-AA

H. Horizontal Split Head (HSH)

A horizontal split head is a progressive horizontal defect originating inside the head that moves horizontally in either or both directions. Before breaking out, a horizontal split head will appear as a flat spot on the running surface. There may be a slight widening of the rail head, and a crack will appear lengthwise along the rail when it reaches the surface of the rail head. See Figure 4-BB.

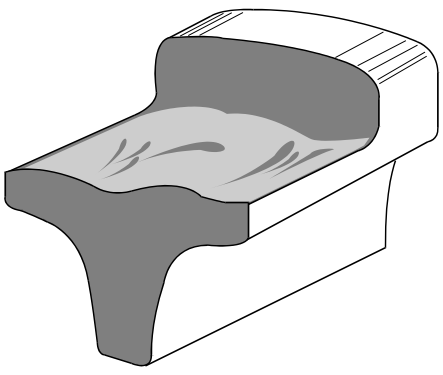

Horizontal Split Head

Figure 4-BB

I. Ordinary Break / Sudden Rupture (SR)

An ordinary break is a partial or complete break in the rail where there are no visible internal defects. See Figure 4-CC.

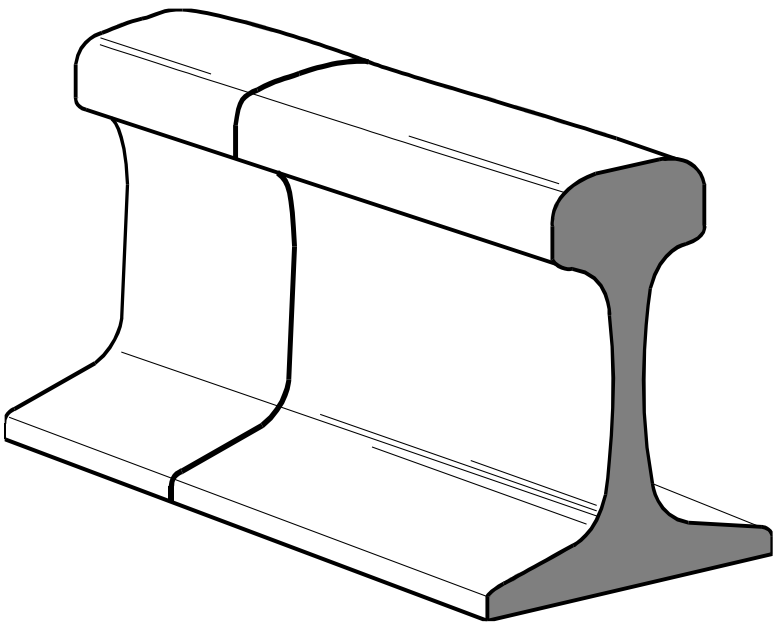

Photo Example

Figure 4-CC **Ordinary Break / Sudden Rupture**

Note: When encountering an ordinary break, not at a weld, trim rail ends square before applying joint bars or welding.

J. Piped Rail (PR)

A piped rail is a vertical split in the web of the rail caused by a manufacturing defect. See Figure 4-DD.

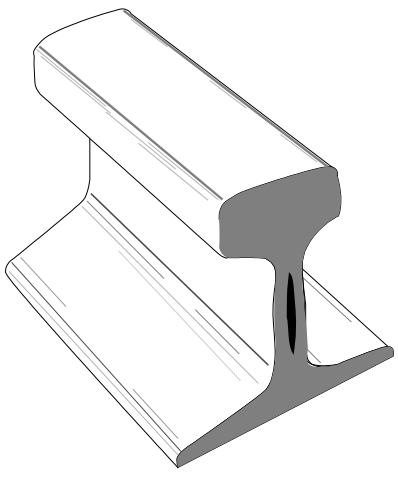

Piped Rail

Figure 4-DD

K. Split Web (SW)

A split web is a lengthwise crack running into and through the side of the web.

See Figure 4-EE.

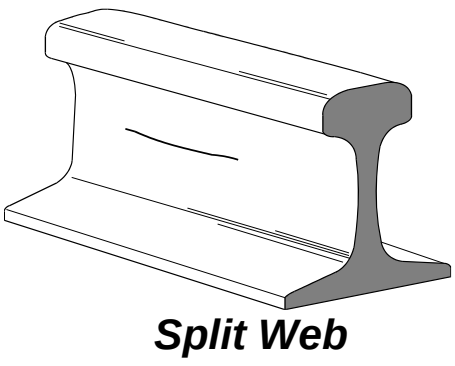

Split Web

Figure 4-EE

L. Transverse Defects

A transverse defect is a group classification applied to defects found by detector cars, of all types of rail defects that have transverse components, such as transverse fissures (TF), compound fissures (CF) and detail fractures (DF).

A transverse fissure (TF) is a progressive fracture from the center of the head that spreads outward and is identified as a smooth, bright or dark round or oval at a right angle to the length of rail. It has a crystalline center and a nearly smooth surface. See Figure 4-FF.

A compound fissure (CF) is a transverse defect with characteristics similar to the transverse fissure, except that the compound fissure originates in a split in the rail head.
See Figure 4-FF.

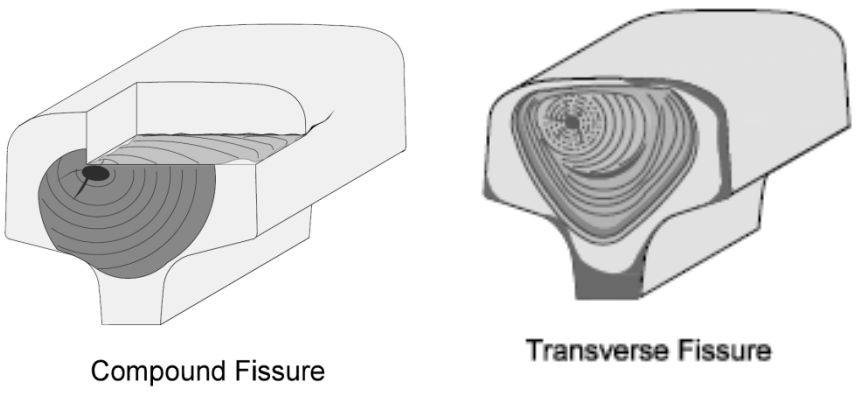

Figure 4-FF

M. A Detail Fracture (DF)

A detail fracture is a progressive fracture originating at or near the surface of the rail head.
See Figure 4-GG.

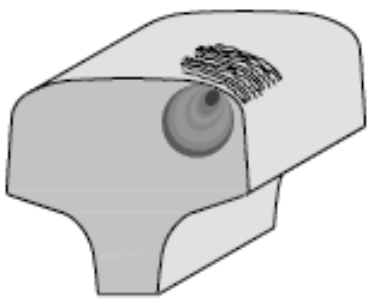

Detail Fracture

Figure 4-GG

N. Vertical Split Head (VSH)

A vertical split head is a vertical split in the head of the rail. It can sometimes be detected by a dark streak that appears on the running surface of the rail head. A rust streak may appear under the head close to the web. See Figure 4-HH.

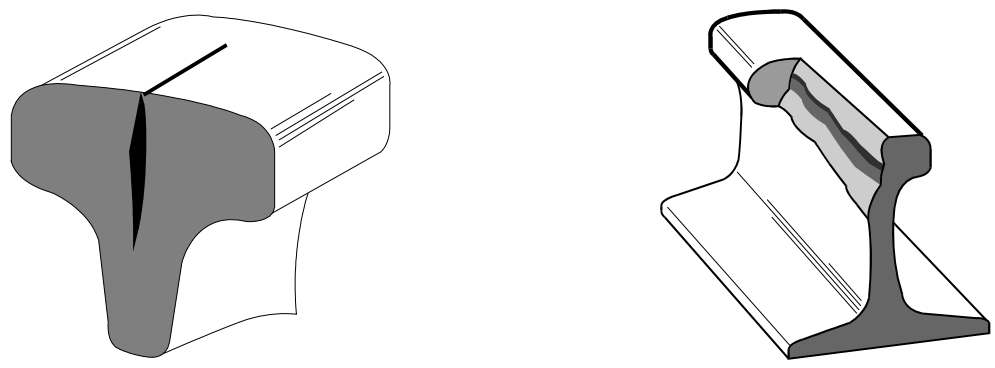

Vertical Split Head

Figure 4-HH

O. Signal Bond Drilled (SBD)

A crack in the rail that developed out of a drilled bond wire. Could be in the rail head or web of the rail. See Figure 4-II.

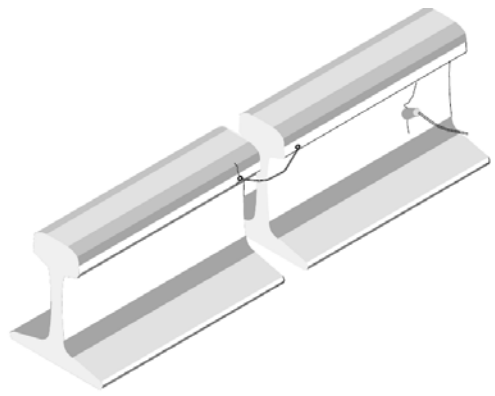

Signal Bond Drilled

Figure 4-II

P. Signal Bond Thermite (SBT)

A crack in the rail that developed out of a bond wire that was welded to the rail. Most common use was the CAD Weld. It could be on the rail head or the web of the rail. See Figure 4-JJ.

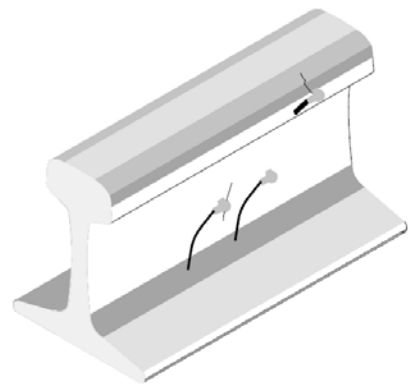

Signal Bond Thermite

Figure 4-JJ

Q. Signal Bond Electric (SBE)

A crack in the rail that developed out of a bond wire that was welded to the rail with electric current. The most commonly used electric bond is the Stanley weld. See Figure 4-KK.

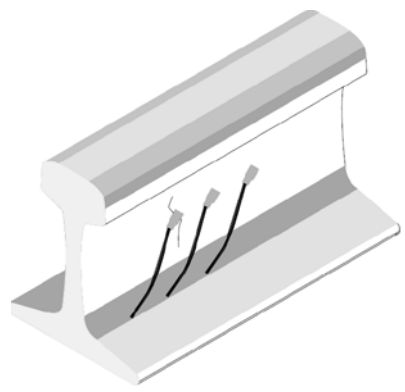

Signal Bond Electric

Figure 4-KK

R. Damaged Rail (DMG-R)

Damaged rail means any rail broken or injured by wrecks, broken, flat, or unbalanced wheels, wheel slipping, or similar causes.

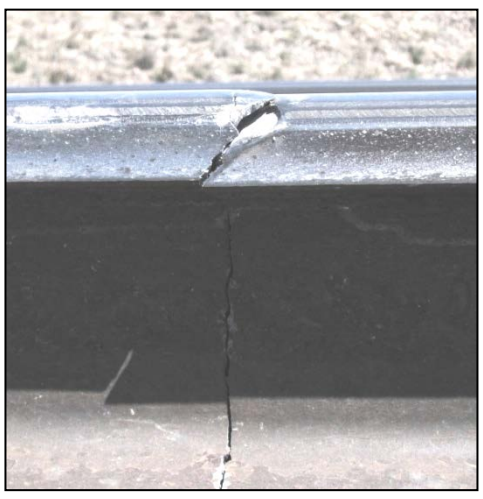

S. Critical Curve Wear (CCW)

Defect based upon established Level 5 Rail Wear Categories by rail weight (Reference 4.3.4 Curve Wear Limit Charts). May be identified by Track Inspectors, Curve Raters, Evaluation Car, Rail Test Chiefs, and other Managers. Field personnel will provide Top and Side wear measurements for verification.

Critical Wear Defect: Limit Operating Speed over defect to 25 MPH until rail is replaced.

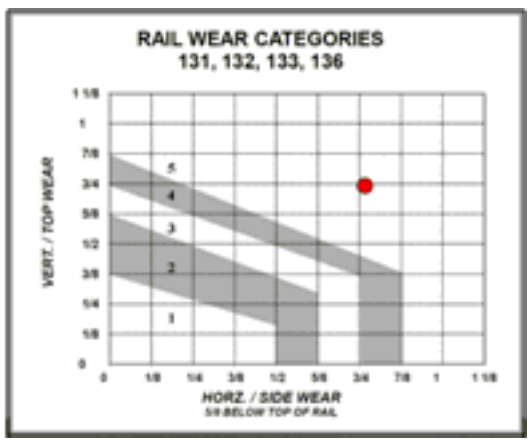

4.18.2 Rail Testing Frequency

Main Line rail will be inspected according to UPRR frequency requirements as specified in the TMP under the Track Assessment tab. In addition to visual inspections, a search for internal defects will be conducted on an established schedule.

The following are the minimum frequencies for internal inspection of rail on sidings, main line crossovers and connection tracks for UPRR. This is in addition to existing FRA requirements of "Inspection of rail" under Track Safety Standards, Part 213.

Rail Testing Minimum Standards 1/19/2015

4.18.2 Default Rail Testing Frequency		
Type of Territory	**UPRR Minimum Frequency**	**Times per Year**
Non-signalized main line greater than or equal to 10 MGT annually	**120 Days**	**3**
Non-signalized main line less than 10 MGT annually	**182 Days**	**2**
All main lines carrying Commuter or Passenger Traffic	**90 Days**	**4**
Class 3 and above main lines in Key Route Territories	**120 Days**	**3**
Sidings and crossovers in Key Route Territories	**Once more annually than FRA requirements. Minimum 182 Days for Sidings**	**2**
Critical Leads	**365 Days**	**1**
Connection Run Thru Tracks	**182 Days**	**2**
Sidings for C,P,M Routes (bi-directional)	**182 Days**	**2**
Sidings for Other Routes/WO Passenger	**365 Days**	**1**
Main line crossovers designated as FRA Class 3 or higher*	**182 Days**	**2**
*** If not otherwise listed above**		
Minimum defined as greater than the calculated frequency for the specific track.		

4.18.3 Defect Marking and Minimum Rail Removal

If a defective rail is detected by any means remove the defect. If the rail is left in the track temporarily, UPRR guidelines for Remedial Action must be followed.

Follow these requirements when removing detector car defects from track.

1. Minimum amount of rail to be removed shall be marked by detector car personnel with a metal marker item number 410-4352 on field side of rail head, see Figure 4-LL. In addition, defects shall be marked with car number, defect type, number, size and date detected in 1-inch high letters with white metal marker on web adjacent to defect.
2. Detector car personnel shall mark defects with OSHA Safety Red spray paint on both sides of the web and base in minimum 2-inch widths. Where one side or sides of the web and base are inaccessible because of permanent features, paint and place highly visible marking on or next to the head of the rail. Paint markings on long defects shall be no more than 6 feet apart, to cover defect area. See Figure 4-LL.

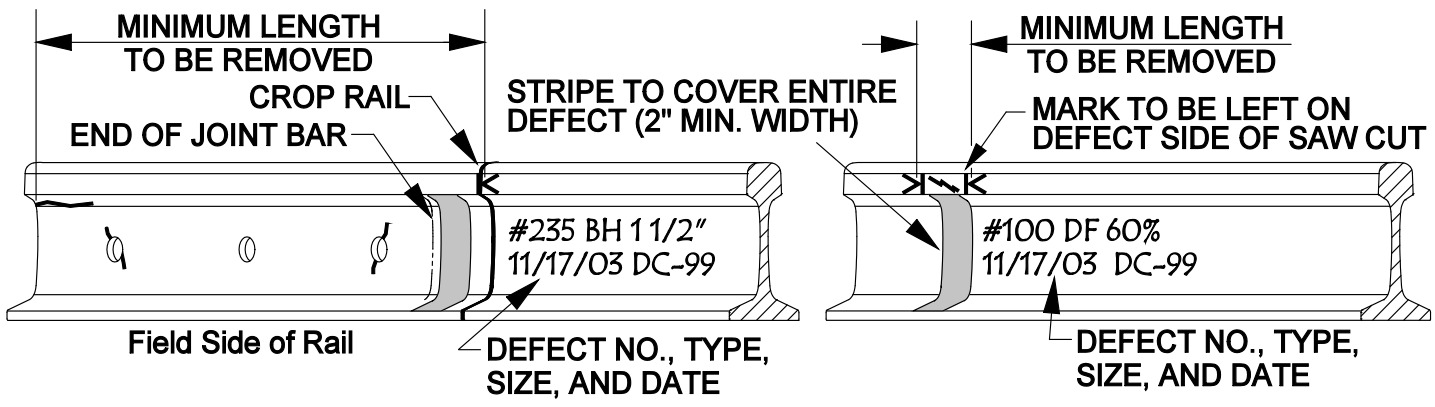

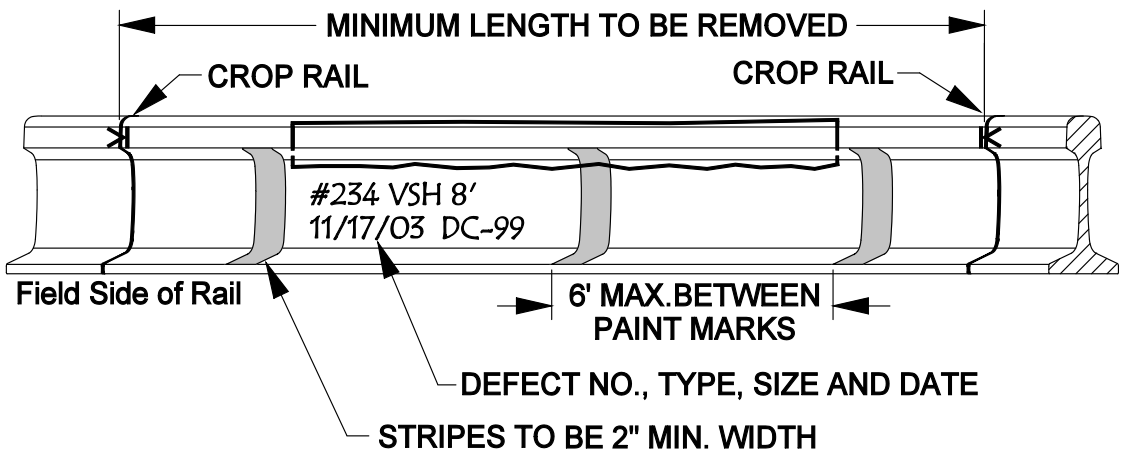

Figure 4-LL

3. Defect area shall be visually inspected after cutting to ensure defect has not grown past marked area.
4. Before removal from site, defect must be cropped from rail and cut into pieces no greater than 14 feet in length to prevent future reuse in track. If not practical to cut rail at site, it must be performed before it is placed in the scrap area to prevent the possibility of reuse.
5. The entire rail (weld to weld) must be removed and scrapped when:
   a) More than one defect is found within the same length of rail on the same inspection.
   b) When defects are found in replacement plug rails, the entire plug rail must be replaced. (Exception to both a and b) - Bolt hole defects and head and web separations within joint areas do not require entire rail be removed or scrapped).
   c) VSH or Pipe defects are detected in rail ingot letter “A” sections.
   d) Any defect is found in the following rails manufactured by “Algoma, British, Workington, Vilru, or Bethlehem FHT.”
   e) Any defect is found in chrome alloy rails manufactured by "Klockner, Thyssen, Krupp and CFI" or any other manufactured chrome alloy rails.
6. Defective rail(s) are to be scrapped and must not stored with good replacement rails.
7. Red paint or marking must not be removed from defective rails.
8. Rail test operators shall mark defective joint bars with OSHA safety red paint with a minimum 2 inch wide, vertical mark in the center of the bar.
9. Remove/paint over previous UT-Tested or UT Certified stenciling on rail removed from track.

4.18.4 Non-Certified Rail Test

Follow these instructions when unable to make a quality rail test:

1. When a rail test operator determines that, due to rail surface conditions, a valid search for internal defect cannot be made, this section of track cannot is not classified as a certified test.
2. When valid search for internal defects cannot be made, the track, location, limits of the area which a valid test could not be obtained and the date of inspection must be documented. Then the rail test operator will enter this information into the UPRR Laptop Movement Reporting System “Rail Test Quality Database.”
3. Rail test operator will immediately notify local Manager Track Maintenance of any areas entered into the “Rail Test Quality Database.”
4. If a valid search for the internal defects is not completed before the expiration of time or tonnage limits as required by the FRA TSS 213.237, place a 25 MPH slow order on the track until a valid ultrasonic inspection is completed or remove track from service.

4.18.5 Rail Repair and Maintenance Plug Rail Replacement

Use Table 4-Q below to determine defect repair / correction options.

Rail Defect Repair Matrix - For the Reduction of Joints Installed in CWR					
Defect Type	**Cut Out Defect and Weld**		**Cut Out Defect and Wide Gap Weld**		**Cut & weld in a Plug Rail (2-welds)**
Repair Options ==>>	**Option #1**		**Option #2**		**Option #3**
CF - Compound Fracture					**X**
TF* - Transverse Fissure	**X (preferred)**	**or**	**X**	**or**	**X ***
DF* - Detail Fracture	**X (preferred)**	**or**	**X**	**or**	**X ***
DPW* - Defective Plant Weld	**X (preferred)**	**or**	**X**	**or**	**X ***
DIW* - Defective In-Track Weld	**X (preferred)**	**or**	**X**	**or**	**X ***
DIW-H - Defective In-Track Head Repair Weld					**X ***
DFW-B - Defective Field Weld - Boutet			**X (preferred)**	**or**	**X**
DFW-O - Defective Field Weld - Orgothermit			**X (preferred)**	**or**	**X**
DFW-U - Defective Field Weld - Unknown			**X (preferred)**	**or**	**X**
DWG-B - Defective Wide-Gap Field Weld - Boutet					**X**
THW - Thermite Head Repair Weld					**X**
EBF - Engine Burn Fracture					**X**
BH - Bolt Hole Crack					**X**
HW - Head Web Separation					**X**
SW - Split Web					**X**
SBT, SBE or SBD - Signal Bond (Thrmit, Elec, Drill)					**X**
HSH - Horizontal Split Head					**X**
VSH - Vertical Split Head					**X**
PR - Pipe Rail					**X**
CH or FR - Crushed Head or Flattened Rail					**X**
SSC - Shell, Sliver, Corrugation					**X**
SSC-W - Shell, Sliver, Corrugation @ Weld	**X (preferred)**	**or**	**X**	**or**	**X ***
DMG-R - Damaged Rail					**X**
BB - Broken Base (Longitudinal break)					**X**
BB - Broken Base (Transverse break)	**X (preferred)**	**or**	**X**	**or**	**X ***
SR - Ordinary Break/Sudden Rupture	**X (preferred)**	**or**	**X**	**or**	**X ***
All Repairs to be made in option order (Option #1 first and Option #3 last).					

Table 4-Q

Form 7913, "Instructions for Inspecting, Welding and Grinding of Rail and Track Components" applies to all of the above.

* When repairing DF, TF, DIW, DPW or DFW – X, refer to Section 4.13 Field Welding (Thermite) for detailed joint and weld placement information.

Defect Repair

A. Follow these requirements for defects that can be removed without a rail change.

Rail test operator will mark outermost limits and centerline of defect on side of rail head.

- If cutting rail for immediate thermite welding, follow steps B. #1 through #6.
- If not setting up rail ends for immediate welding, but welding is planned, skip to C. #1 through #4.
- If welding out a defect that had been cut and drilled, with joint bar application, skip to D. #1 through #6.

B. Immediate Thermite welding

1. Use reference marks as outlined in Section 7.9.2 Placing Reference Marks.
2. Adjust rail anchors to prevent rail movement.
3. Make saw cuts for weld gap needed. Cuts must be at or beyond the rail test operator's marks to ensure entire defect is removed.
4. When the rail test operator's marks are missing, do the following:
   Cut and remove 1-3/8" minimum, on each side of defect or cut centerline.
5. Make a visual inspection of the rail ends to make sure there are no cracks or signs of defect still present. If indication of defect is still present, more rail must be removed until no signs are present.
6. When necessary, use a rail puller to hold rail in position or pull rail back together.
7. Follow CWR adjust policy and welding procedures to weld rail ends together.

C. Cut and Drill for Joint Bar Application – Defect welding out planned

1. Use reference marks as outlined in Section 7.9.2 Placing Reference Marks.
2. Adjust rail anchors tight against ties and make saw cuts needed to remove entire defect marked by the operator. See Figure 4-MM.
3. When necessary, use a rail puller to hold rail in position or pull rail back together.
4. Drill only the outermost 4 bolt holes and apply joint bars. Bolt holes and rail ends to be beveled and slotted per Standard Drawing No. 0745. To de-burr and bevel holes drilled in the field, use abrasive stone (Item Number 411-3867).

D. Welding out a defect where a single cut was made or joint bars only were applied.

1. Use reference marks as outlined in Section 7.9.2 Placing Reference Marks.
2. Adjust rail anchors to prevent rail movement.
3. Two additional saw cuts may be required to remove the defect. Make saw cuts on both sides of the rail gap at or beyond the existing rail test operator's marks to ensure entire

defect is removed. Ensure gap is correct for the type of weld to be used (standard or wide gap thermite weld).

4. When defect was not removed with two saw cuts at an earlier time and the rail test operator's marks are missing, do the following: Cut and remove 1-3/8" on each side of original saw cut centerline; and install a wide gap weld.
5. When necessary, use a rail puller to hold rail in position or pull rail back together.
6. Follow CWR adjust policy and welding procedures to weld rail ends together.

See example of rail marking in Figure 4-MM.

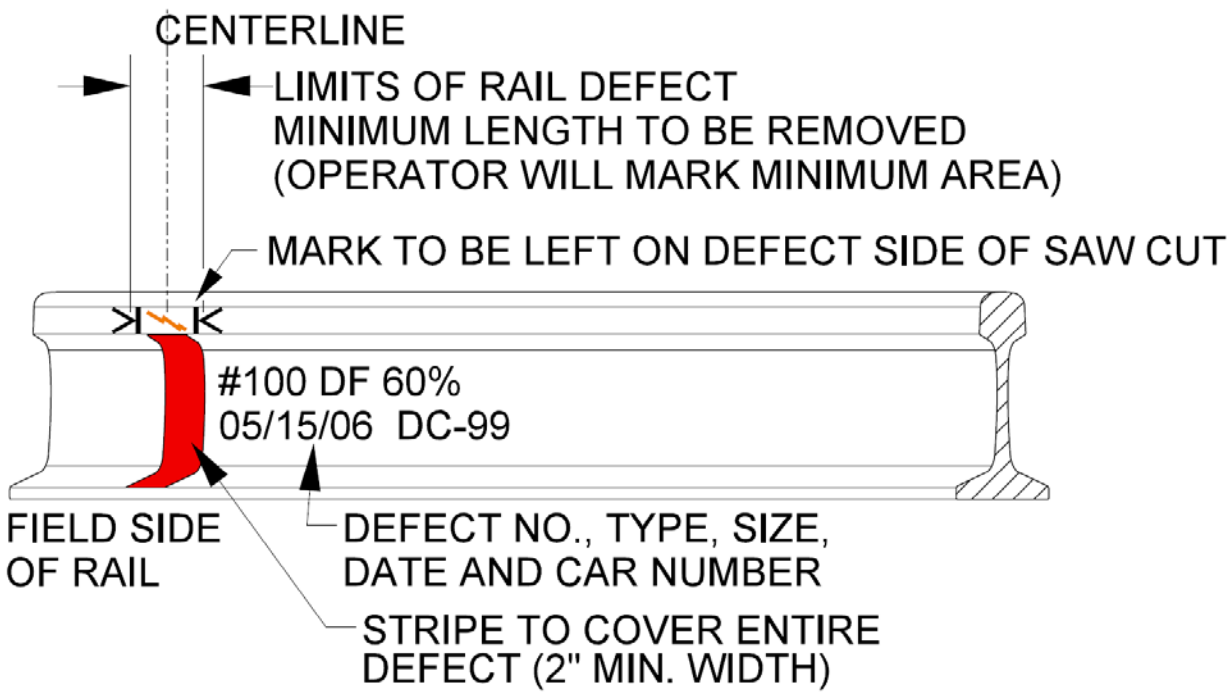

Figure 4-MM

E. Main Line Maintenance Replacement Rails

When defects are found by a detector car or a service failed rail occurs, replace rail with UT Tested or UT Certified rail as follows:

All rails installed are to be consistent with appropriate length, plug rail specification and rail chemistry per existing instructions. (Section 4.3.1 A. through C and Form 7913, "Instructions for Inspecting, Welding and Grinding of Rail and Track Components". Worn rail must not have more than ¼" vertical mismatch or ¼" horizontal gage face mismatch. Replacement rail surface condition must be equal or better than adjacent rail in track.

Undesirable rail surface conditions include wheel burns, corrugation, shelling, slivers, spalling or heavy head checking, all of which could hide internal defects.

- New rail or rail newer than rail in track is to be used for individual rail replacements in territories where rail is less than three years old. (New rail that has never been installed in track was tested at the manufacturer). When installing a new rail, Write "New Rail" and "Installed – Current date" on rail web with a permanent rail marker
- **All Main Lines and Controlled Sidings** - Use replacement rails with a roll date no older than 1975 for133# and 136# rail sections.

Rail older than 1975 for 133# and 136# rail sections which is released from the mainline may be used as replacement rail **only when <u>All</u> provisions described below are met**: 1. Manufacture date and rail chemistry are the same as or an improvement to the adjacent rail sections where the rail will be installed. *(Refer to: 4.2.4 – Rail Chemistry and 4.3.1, A. Manufacturing Process Restrictions)* 2. Non A-rail AND Control cooled (*Refer to Section 4.2.3 – Hydrogen Elimination)* 3. Rail is UT Certified / Tested and properly marked on each side of the rail web.

- **Other Tracks** – Use controlled cooled rails.
- **Restricted Use Maintenance Rail —** A-rails and non-controlled cooled rails are to be used in yard, back or industry tracks only. These rails must be separated in inventory upon inspection and identification. Non-controlled cooled rails (pre-1937) are not to be used in welded strings. When rail cannot be identified because of corrosion, rust scaling or otherwise, assume that the rail is an "A-rail" and inventory as such. Under current policy, no A-rails or non-controlled cooled rails may be purchased. A-rail is limited to secondhand rail relay, Class 3 usage. Rail manufactures after 1938 identified controlled cooled rail by "CC", "VT" or "OP" on Brand side of rail. * *Note: All rail manufactured in the United States after 1937 is controlled cooled rail, although "CC" may be not present on the Brand side.* A-rail is identified on stamp side of rail following heat number. See Sections 4.2.1 Rail Branding and 4.2.2 Rail Stamping.

4.18.6 Remedial Action Required

Use Table 4-R to determine the required action for rail defects.

NOTE: In the following table, the symbol > means greater than.

Note: The latest copies of the Rail Defect Remediation Matrix and DC Defect Remedial Action Quick Reference Guide can be found in the TMP under the Track Assessment > Detector Cars > DC Defect Remedial Action Quick Reference Guide.

The table below outlines major changes from the previous Rail Defect Remediation Matrix

Defect Type	Change (NEW)	*Previous Matrix*
Compound Fissure (CF) & (CF-G)	Only one Repair option - This requires the rail to be replaced. Joint bars are applied to reduce risk until the rail is replaced.	*No change*
Transverse Fissure (TF)	Now Requires the Same Remediation as a Detail Fracture (DF)	*Was the same as CF*
DF, EBF, and Weld Defects Less than 25%	Requires joint bars to be applied within **10 Days** When not applied within 10 days, track speed must not exceed **10 MPH**	*Was 20 days, then Out-of-Service*
DF, EBF, and Weld Defects 25% or greater, but **less than 60%**	Requires joint bars to be applied within **7 Days** When not applied within 7 days, track speed must not exceed **10 MPH**	*Was 10 days and >80%, then Out-of-Service*
DF, EBF, and Weld Defects **60% or greater**	**10 MPH** until Joint Bars are applied AND Joint bars must be applied within **7 Days**	*Was 10 days to 80% then Out-of Service*
Longitudinal Weld Defects (Visual or found with UT)	Longitudinal Defects found in Welds - Apply Remediation per Split Web (SW) according to length of defect. When there is any transverse component to the defect, Apply the most restrictive remediation	*New FRA classification for weld defects*
BH, HW, HSH, VSH & Pipe	Reinspect Option starts over with each reinspection. When found with anything other than visual, reinspect must include the ability to resize the defect. (Found with UT, reinspect with UT)	*Reinspection was only defined in the FRA Compliance Manual*
Crushed Head (CH)	Depth ≥3/8" and length ≥8" or deformation under the rail head. *This also applies to Flattened Rail (FR)*	*Was not classified by FRA*

Table 4-R

Table 4-R (cont.)

Defect Type	Applies to Main Tracks on: > Critical, Premium and Major Service Routes > All Passenger Train Routes > Main Lines Greater than 20 MGT Annually			Applies to All Other Tracks Tested			Minimum Remedial Code, When not removed ahead of trains
	Percent of existing rail head cross-sectional area weakened by defect		Required Action	Percent of existing rail head cross-sectional area weakened by defect		Required Action	
	Less Than	But Not Less Than	If defective rail is not replaced or repaired, take the remedial action prescribed in note	Less Than	But Not Less Than	If defective rail is not replaced or repaired, take the remedial action prescribed in note	
Compound fissure (CF) & (CF-G)	25%	1%	Limit operating speed over defect to 30 MPH. Apply joint barswithin 48 hours.	70%	1%	limit operating speed, not to exceed 30 MPH over defect. Apply joint bars within 10 days in class 1 & higher.	B
	70%	25%	Limit operating speed over defect to 10 MPH until joint bars are applied, thereafter 30 MPH. Apply joint bars within 48 hours				
	100%	70%	After visual inspection, limit operating speed over defect to 10 MPH or less. If not replaced the same day, apply joint bars. Replace or repair rail within 24 hours.	100%	70%	After visual inspection, limit operating speed, not to exceed 10 MPH over defect. Visually inspect within each 24 hour period or replace rail. Apply joint bars within 5 days in class 3 & higher and within 7 days in class 1 & 2 track.	A2
		100% (CO)	Visually supervise each movement over defective railm not to exceed 10 MPH. Replace or repair rail within 24 hours.		100% (CO)	Visually supervise each movement over defective rail, not to exceed 10 MPH. Apply joint bars within 5 days in calss 3 & higher and within 7 days in calss 1 & 2 track.	**A**
	(CO) " Crack Out" is a visual crack in rail head						

Table 4-R (cont.)

Defect Type	Applies to Main Tracks on: > Critical, Premium and Major Service Routes > All Passenger Train Routes > Main Lines Greater than 20 MGT Annually			Applies to All Other Tracks Tested			Minimum Remedial Code, When not removed ahead of trains
	Percent of existing rail head cross-sectional area weakened by defect		Required Action	Percent of existing rail head cross-sectional area weakened by defect		Required Action	
	Less Than	But Not Less Than	If defective rail is not replaced or repaired, take the remedial action prescribed in note	Less Than	But Not Less Than	If defective rail is not replaced or repaired, take the remedial action prescribed in note	
Transverse Fissure (TF) - Detail Fracture (DF) & (DF-G) - Engine Burn Fracture (EBF) - Defective Field Weld Boutet (DFW-B) [1] - Defective Field Weld Orgothermit (DFW-O) [1] - Defective Field Weld Unknown Mfg. (DFW-U) [1] - Defective Wide Gap Weld (DWG-B) [1] - Defective Plant Weld (DPW) - Defective In-Track Weld (DIW) - Defective Head Repair Weld (DSW or THW)) - Signal Bond (SBT, SBE & SBD) in head of rail	25%	1%	Limit operating speed to 50 MPH and replace or repair rail within 4 days. If rail not replaced or repaired, restrict to 30 MPH until joint bars are applied and 50 MPH thereafter. Apply bars within **10 days** in class 1 & higher. When joint bars have not been applied within 10 days, limit operating speed to 10 MPH	25%	1%	Limit operating speed to 50 MPH and replace rail within 4 days. If rail not replaced, restrict to 30 MPH until bars are applied and 50 MPH thereafter. Apply joint bars within **10 days** in class 1 & higher. When joint bars have not been applied within 10 days, limit operating speed to 10 MPH	C
	60%	25%	Limit operating speed over defect to 30 MPH Until joint bars are applied, thereafter 50 MPH. Joint bars must be applied within 5 days in class 1 & higher. When joint bars have not been applied within **7 days**, limit operating speed to 10 MPH	**60%**	25%	Limit operating speed over defect to 30 MPH Until Joint Bars are applied, there after 50 MPH. Apply joint bars within 5 days in class 3 & higher and within **7 days** in class 1 & 2 track. When joint bars have not been applied within **7 days**, limit operating speed to 10 MPH	D
	100%	**60%**	After visual inspection, limit operating speed over defect to 10 MPH joint bars are applied, thereafter limit operating speed to 50 MPH. Apply joint bars within 24 hours. Make a Visual inspection within each 24 hours util joint bars are applied; rail is replaced or repaired.	100%	**60%**	After visual inspection, limit operating speed over defect to 10 MPH and make a visual inspection within each 24 hours period **OR** Apply joint bars, thereafter limit operating speed to 50 MPH. Apply joint bars within 5 days in class 3 & higher and within **7 days** in class 1 & 2 track.	A2 **or** (E and H)
		100% (CO)	Visually supervise each operation over the defect & limit operating speed over defect to 10 MPH until joint bars are applied, thereafter limit operating speed to 50 MPH. Apply joint bars within 24 hours.		100% (CO)	Visually supervise each operation over the defect & limit operating speed over defect to 10 MPH. **OR** Apply joint bars and limit operating speed to 50 MPH. Apply joint bars within 5 days in class 3 & higher and within **7 days** in class 1 & 2 track.	A or (E and H)
See "Repair" definition below.	(CO) " Crack Out" is a visual crack in rail head						

Table 4-R (cont.

Defect Type	Applies to Main Tracks on: > Critical, Premium and Major Service Routes > All Passenger Train Routes > Main Lines Greater than 20 MGT Annually			Applies to All Other Tracks Tested			Minimum Remedial Code, When not removed ahead of trains
	Length of Defect		Required Action	Length of Defect		Required Action	
	More Than	But Not More Than	If defective rail is not replaced or repaired, take the remedial action prescribed in note	More Than	But Not More Than	If defective rail is not replaced, take the remedial action prescribed in note	
Horizontal Split Head (HSH) - Vertical Split Head (VSH) - Split Web (SW) - Signal Bond (SBT, SBE & SBD) in web of rail - Pipe Rail (PR) - Head & Web Separation (HW) ----- (HW - within joint bars or spring rail frog See notes below)	0"	1"	Replace rail within 14 days.	0"	1"	No Requirement	NRA
	1"	2"	Limit operating speed over defect to 50 MPH & Replace rail within 14 days.	1"	2"	Limit operating speed to 50 MPH or maximum allowable speed for class of track. If rail not replaced, inspect rail [3] in 90 days.	H and F
	2"	4"	Limit operating speed over defect to 30 MPH & Replace rail within 14 days.	2"	4"	Limit operating speed, not to exceed 30 MPH over defect. If rail not replaced, inspect rail [3] in 30 days .	I and G
	4"		Visually inspect and determine if safe to continue operation over the defect & limit operating speed over defect to 30 MPH. Replace Rail within 24-hours.	4"		Limit operating speed, not to exceed 30 MPH over defect. If rail not replaced, inspect rail [3] in 15 days.	B
	Break out in rail head		Visually supervise each operation over the defect & limit operating speed over defect to 10 MPH until rail is replaced.	**Break out in rail head**		Visually supervise each movement over defective rail, not to exceed 10 MPH.	A
Additional Required Actions HW within Joint Area	**1/2"**	**1"**	**Replace rail within 48 hrs.**	**1/2"**	**1"**	**Replace rail within 14 days**	NRA
	1"		**Replace rail within 24 hours.**	**1"**		**Replace rail within 7 days.**	Use above sizes for remedial
HW in Spring rail frog	**0"**	**NA**	**Replace per FRA Track Safety Standards Part 213.139 (c)**	**NA**	**NA**	**Replace per FRA Track Safety Standards Part 213.139 (c)**	213

Table 4-R (cont.)

Defect Type	Applies to Main Tracks on: > Critical, Premium and Major Service Routes > All Passenger Train Routes > Main Lines Greater than 20 MGT Annually			Applies to All Other Tracks Tested			Minimum Remedial Code, When not removed ahead of trains
	Length of Defect		Required Action	Length of Defect		Required Action	
	More Than	But Not More Than	If defective rail is not replaced or repaired, take the remedial action prescribed in note	More Than	But Not More Than	If defective rail is not replaced, take the remedial action prescribed in note	
Bolt Hole Crack (BH) **Note: BH defect found in spring rail frog** ***See below***	* 0"	1/2"	Replace rail within 30 days.	0"	1/2"	No Requirement	NRA
	1/2"	1"	Limit operating speed over defect to 30 MPH & Replace rail within 7 Days	1/2"	1"	Limit operating speed, not to exceed to 50 MPH over defect. If rail not replaced, inspect rail ³ in 90 days.	H and F
	1"	1 1/2"	Limit operating speed over defect to 30 MPH & Replace rail within 7 Days	1"	1 1/2"	Limit operating speed not to exceed 50 MPH over defect. If rail not replaced, inspect rail ³ in 30 days.	H and G
	1-1/2"		Limit operating speed over defect to 10 MPH & Replace rail within 14 days.	1 1/2"		Limit operating speed, not to exceed 30 MPH over defect.	B
	Break out in rail head		Visually supervise each operation over the defect & limit operating speed over defect to 10 MPH until rail is replaced.	Break out in rail head		Visually supervise each movement over defective rail, not to exceed 10 MPH.	A
BH in Spring rail frog	**0"**	**NA**	**Replace per FRA Track Safety Standards Part 213.139 (c)**	**NA**	**NA**	**Replace per FRA Track Safety Standards Part 213.139 (c)**	213
	*** No remedial action is required for Bolt Hole defects under the following conditions: > Defects less than 1/4" in size that cannot be visually verified after bars are removed.** **Note: BH defect found in spring rail frog shall be replaced regardless of size – Reference FRA, Track Safety Standards, Part 213.139 (c)**						
Broken Base (BB) - Signal Bond (SBT, SBE & SBD) attached to base of rail	0"	2"	Limit operating speed over defect to 30 MPH until Joint Bars are applied, there after 50 MPH. Replace Rail within 48 hours.	0"	6"	Limit operating speed over defect to 30 MPH until joint bars are applied, there after 50 MPH. Apply joint bars within 5 days in class 3 & higher and within 10 days in class 1 & 2 track.	D
	2"		After visual inspection and determined safe to continue in operation, limit operating speed to 10 MPH and supervise each movement over defect until joint bars are applied, thereafter 30 MPH. Replace Rail within 48 hours.	6"		Visually supervise each movement over defective rail, not to exceed 10 MPH **OR** Apply joint bars, thereafter limit operating speed to 30 MPH. Apply joint bars within 5 days in class 3 & higher and within 10 days in class 1 & 2 track	A **or** (E and I)

Table 4-R (cont.)

Defect Type	Applies to Main Tracks on: > Critical, Premium and Major Service Routes > All Passenger Train Routes > Main Lines Greater than 20 MGT Annually			Applies to All Other Tracks Tested			Minimum Remedial Code, When not removed ahead of trains
	Length of Defect		Required Action	Length of Defect		Required Action	
	More Than	But Not More Than	If defective rail is not replaced or repaired, take the remedial action prescribed in note	More Than	But Not More Than	If defective rail is not replaced, take the remedial action prescribed in note	
Ordinary Break	N/A		Visually supervise each operation over the defect & limit operating speed over defect to 10 MPH or less, until application of joint bars. Apply joint bars within 24 hours.	N/A		Visually supervise each operation over the defect & limit operating speed over defect to 10 MPH or less, until application of joint bars. Apply joint bars within 24 hours.	A or E
Shell, Sliver, Corrugation (SSC) & (SSC-W) *	N/A		Replace rail or repair within required days per SSC Route Class Remediation Table below [2]. Maintenance officer designated under FRA 213.9 is required to visually inspect within 7-days [4]	N/A		Replace rail or repair within required days per SSC Route Class Remediation Table below [2]. Maintenance officer designated under FRA 213.9 is required to visually inspect within 14-days [4]	NRA
	On or within 500 feet of bridge[5]		Limit operating speed to 30 MPH. Replace rail within 30 days [2]. Maintenance officer designated under FRA 213.9 is required to visually inspect within 7-days [4]	**On or within 500 feet of bridge[5]**		Limit operating speed to 30 MPH. Replace rail within 30 days [2]. Maintenance officer designated under FRA 213.9 is required to visually inspect within 7-days [4]	NRA
Flattened Rail (FR) - Crushed Head (CH)	Depth ≥ 3/8" and length ≥ 8" or deformation under the rail head		Replace rail or repair within required days per SSC Route Class Remediation Table below [2]. Maintenance officer designated under FRA 213.9 is required to visually inspect within 7-days [4]	Depth ≥ 3/8" and length ≥ 8" or deformation under the rail head		Replace rail or repair within required days per SSC Route Class Remediation Table below [2]. Maintenance officer designated under FRA 213.9 is required to visually inspect within 7-days [4]	H
Damaged Rail (DMG-R)	N/A		Limit operating speed over defect to 30 MPH until joint bars are applied, there after 50 MPH. Apply joint bars within 5 days	N/A		Limit operating speed over defect to 30 MPH until joint bars are applied, there after 50 MPH. Apply joint bars within 5 days in class 3 & higher and within 10 days in class 1 & 2 track.	C
All Inspections, restrictions or remedial actions will be performed by Supervisor / person qualified & designated under U.S. DOT Track Safety Standards 213.7(a) in Track Class 1 - 5 and 213.305 in Track Class 6 & higher. Supervisor may apply more restrictive remedial action to insure safe train operation over defect.							

Table 4-R (cont.)

SSC Route Class Remediation Table

	Route Class:	Critical		Premium		Major	Other
	Applies to Main Tracks with the following Annual MGT:	Less than 50 MGT	50 MGT or Greater	Less than 50 MGT	50 MGT or Greater	No MGT Requirement	No MGT Requirement
Defect Type	Length of Defect						
Shell, Sliver, Corrugation (SSC) & (SSC-W) * - Flattened Rail (FR) - Crushed Head (CH)	Less than 3 feet	40 Days	35 Days	40 Days	35 Days	50 Days	60 Days
	3 to 10 feet	40 Days	30 Days	40 Days	35 Days	50 Days	60 Days
	Greater than 10 feet	40 Days	20 Days	40 Days	30 Days	40 Days	60 Days
	When defect is not corrected within the day requirement above, limit operating speed over defect to 30 MPH for Freight trains or 40 MPH for Passenger trains [2].						
	On or within 500 feet of bridge[5]	Limit operating speed to 30 MPH. Replace rail within 30 days [2].					

Table 4-R (cont.)

Definitions and Notes

* Definition: Shell, Sliver, Corrugation are locations where, rail defects may originate or may be hidden under surface conditions. These defects are at risk of not being detected by ultrasonic test systems. SSC defects are usually localized surface conditions between 8-inches and one rail length. SSC-W (Battered Welds SSC) defects usually begin within 6" of welds.
[1] Note: Thermite Field Weld Defects – Standard joint bars may not be applied without excessive grinding and risk of failure. For these reasons, weld or rail must be replaced prior to expiration of days required by UPRR and FRA TSS § 213.113 or § 213.337 to apply joint bars. Field weld straps are not joint bars.
[2] Note: If not removed or repaired within the days required, a variance must be requested and given by the Region Chief Engineer, General Director or higher company officer.
Clarification: [2] Note above applies to All defects not removed or repaired within the required days
[3] Note: "Inspect rail" means: Inspect rail within "required" days after it is determined to continue the track in use. If the rail remains in track and is not replaced or repaired, the reinspection cycle starts over with each successive reinspection unless the reinspection reveals the rail defect to have increased in size and has therefore become subject to a more restrictive remedial action. This process continues indefinitely until the rail is removed from track or repaired. If not inspected within "required" days, limit speed to Class 2 or the maximum allowable speed under 213.9 for the class of track concerned, whichever is lower, until inspected.
[4] Note: Maintenance officer's inspection will be performed by MTM, designated region officer or ARASA qualified under FRA, TSS §213.7. This is an on the ground, visual inspection of the rail to determine if track is to remain in service and /or determine if a more restrictive speed is needed.
[5] Bridge means: Any structure with a deck or undergrade structure with spans 10 feet or greater in length, which supports one or more railroad tracks.
"Repair" means Remove Entire Defect or Defective Weld as marked, adjust rail as required and Apply joint bars or Weld rail.
Application of joint bars associated with remediation of CF and CF-G defects are UP requirements to reduce risk until defect is repaired or rail is replaced. Remediation requires removing the entire defect in all FRA Track Classes.
Apply joint bars, means: Drill the outermost four holes, two on either side of defect and securely bolt a joint bar to each side of rail. Rail weights greater than 112 LB require 36" or longer joint bars.
Limit Operating Speed, means the same as "Speed is Not to Exceed"
New Defect Classifications - 8/2006 added: Signal Bond (SBT, SBE & SBD) are defects originating in signal bond process or application. SBT = Signal Bond Thermite (CAD WELD), SBE = Signal Bond Electric and SBD = Signal Bond Drilled. Defective Slot Weld (DSW) is a defect originating from slot welding process used to repair some head defects. 10/2008 added: DF-G = Detail Fracture found with D-car gage ultrasonic Wheel. CF-G = Compound Fracture found with D-car gage ultrasonic wheel
Inspect rail means: Inspect rail within "*required*" days after it is determined to continue the track in use. If the rail remains in track and is not replaced or repaired, the reinspection cycle starts over with each successive reinspection unless the reinspection reveals the rail defect to have increased in size and has therefore become subject to a more restrictive remedial action. This process continues indefinitely until the rail is removed from track or repaired. If not inspected within "required" days, limit speed to Class 2 or the maximum allowable speed under 213.9 for the class of track concerned, whichever is lower, until inspected.
Longitudinal Defects found in Welds - Apply Remediation per Split Web (SW) according to length of defect. When there is any transverse component to the defect, Apply the most restrictive weld defect remediation.

DPW and DIW Remediation:

When joint bars are applied to a defective flash butt weld (Plant Weld or In-Track Weld) or defective field weld as part of temporary remediation, do the following:

- Overflow metal must be completely ground off to rail profile, ensuring complete removal of the overflow metal from the Fishing area under the head and base of the rail. *Failure to completely remove the metal overflow will cause the joint bar to bind on the upset metal and prevents contact with the rail, resulting in a service failure.*

When overflow metal cannot be completely removed by grinding, standard joint bars must not be applied. In an emergency, as a temporary repair to pass trains over a broken rail, apply field welds straps and a maximum 10 MPH Slow Order. Field weld straps are **not** joint bars and must not be used in place of standard joint bars.

Insulated Joint:

Requirements for inspection and remedial actions for defective insulated joints are located in Section 8.6.15 Insulated Joint Bar Inspections.

4.18.7 Maintenance Replacement Rail Certification

All maintenance rail installed in the following tracks shall be ultrasonically tested for internal rail defects and be certified defect free:

- All track referenced in Section 4.18.2 Rail Testing Frequency.
- All other tracks as designated by the Chief Engineer.

All maintenance rails shall be marked with the following information:

- Method of certification (UT TESTED or UT CERT) stenciled on the rail web in yellow.
- Employee ID or Vendor Number certifying rail.
- **Date Last Tested.**
- **MGT Since Last Test for UT CERT rail.**

If rail is installed and no certification markings are on the rail:

- Limit operating speed to 25 mph until ultrasonic inspection is complete. Use slow order code T-20.

Replacement rails shall be certified in one of these three methods prior to installation.

A. Rails certified by field maintenance personnel

This method involves field personnel certifying rail, provided that they have a personal knowledge of the last ultrasonic test prior to being removed from service. This method will be used in the following situations:

1. Rail is removed from main track and either re-installed or stock piled for later installation at designated locations.

   Note: Replacement plug rail must not contain head repair welds or thermite welds of any kind. All bond pin holes shall be no closer than 18 inches to either end of plug. Plant or In-Track Welds must be no closer than 30 inches from either end.

2. If a certified plug rail is cropped into smaller sections, employee shall copy certification information to rail web of all sections that meet UPRR length requirements and include their employee ID#.

   Note: When removing rail from main line tracks, obtain the date last tested and accumulated tonnage since last test found in the TMP under the Track Assessment > Rail Certification.

3. Rail must have been removed from main track within 10 MGT of last full ultrasonic inspection for internal defects.
4. Rails not removed within 10 MGT of the last ultrasonic inspection shall be UT tested prior to reinstallation in applicable trackage.
5. Rail removed from sidings where current tonnage is not available, may be certified for reuse if ultrasonic inspection is within the last 90 days AND less than 10 MGT.
   Use adjacent mainline tonnage to calculate MGT since last test.
   MGT Since Last Test Calculation:
   ("Annual MGT" / 365 days) X "Days Since Test" = MGT Since Test
   Example: Annual MGT for Sub "A" = 183 MGT and it's been 10 days since the detector car tested this rail, then:
   183/365 = .5 MGT/day
   .5 MGT multiplied by 10 days = 5 MGT Since Last Test
6. Write last test date and MGT since last test on rail web. See Figure 4-NN below.

Note: Revision to FRA rule 213.237 (c) – Inspection of Rail

Internal rail inspections on Class 4 and 5 Track, or Class 3 Track with regularly-scheduled passenger trains or that is a hazardous material route, shall not exceed a time interval of 370 days between inspections or a tonnage interval of 30 mgt between inspections, whichever is shorter. Internal rail inspections on Class 3 Track that is without regularly-scheduled passenger trains and not a hazardous material route must be inspected at least once each calendar year, with no more than 18 months between inspections, or at least once every 30 mgt, whichever interval is longer, but in no case may inspections be more than 5 years apart.

(1) Any rail used as replacement plug rail in track that is required to be tested in accordance with this section must have been tested for internal rail flaws.

(2) The track owner must verify that any plug rail installed after March 25, 2014 has not accumulated more than a total of 30 mgt in previous and new locations since it's last internal rail flaw test, before the next test on the rail required by this section is performed.

(3) If plug rail not in compliance with this paragraph (c) is in use after March 25, 2014, trains over that rail must not exceed Class 2 speeds until the rail is tested in accordance with this section.

B. Maintenance rail is certified in the field at designated locations

This method involves a contractor or a railroad employee to ultrasonically test, certify and mark rail for reuse.

1. Rail shall be collected and prepared for inspection by local forces. Rail surface may require wire brushing for proper testing by local forces.
2. Railroad employees or contractors will periodically test rails laid out for inspection. This testing is to be performed by joint test cars with existing equipment modified for single rail traversing or by a contractor with special equipment.
3. Rails shall have a complete ultrasonic inspection with a portable unit.
4. Rail ends shall be hand tested in areas not accessible to portable test unit.
5. Rails will be certified and marked with employee ID/vendor number, date tested and UT TESTED stenciled on web of rail.

C. Certified plug rail purchased from outside parties

This method involves an outside vendor-purchasing rail removed from UPRR track, sorting and/or testing rail and selling it back to UPRR as UT certified rail.

1. Vendor purchases and removes rail from right-of-way.
2. Vendor sorts, ultrasonically tests and certifies rails.
3. Rail is marked per these instructions.
4. Rail is furnished to the field through the regional track stores.

Table 4-S shows plug rails to be made available.

Plug Rail Specification					
Designation	**Rail Sections**	**Application**	**Vertical Wear**	**Horizontal Wear**	**Rail Type**
PT-0 (New)	133, 136, 141	Tangent/Low Rail	0	0	Standard strength and head hardened
PT-1	115, 119, 133, 136, 141	Tangent/Low Rail	3/32" Max	1/32" Max	Standard strength and head hardened
PT-2	133, 136, 141	Tangent/Low Rail	5/16"	1/16"	Standard strength and head hardened
PT-3	133, 136, 141	Tangent/Low Rail	1/2"	1/16"	Standard strength and head hardened
PT-4	115, 119, 133, 136, 141	Tangent/Low Rail	11/16"	1/16"	Standard strength and head hardened
PT-5	133, 136, 141	High Rail	1/8"	1/4"	Head Hardened
PT-6	115, 119, 133, 136, 141	High Rail	1/4"	1/2"	Head Hardened

Table 4-S

D. Marking

All replacement rails that have been certified UT Tested or UT Certified shall be marked and stenciled as follows:

1. Employee is certifying rail that has been tested within the last 10 MGT of service shall mark and stencil UT CERT, (Item Number PC-00600), 3 feet from rail end, on rail web. Stencil using Safety Yellow enamel paint. See Figure 4-NN.
2. Mark each rail 3 feet from rail end with their employee ID# or vendor identification. When using UT CERT process, mark last test UT date and MGT since last test. Markings shall be placed on web in 1-inch letters and numbers using metal marker item number 410-4352.

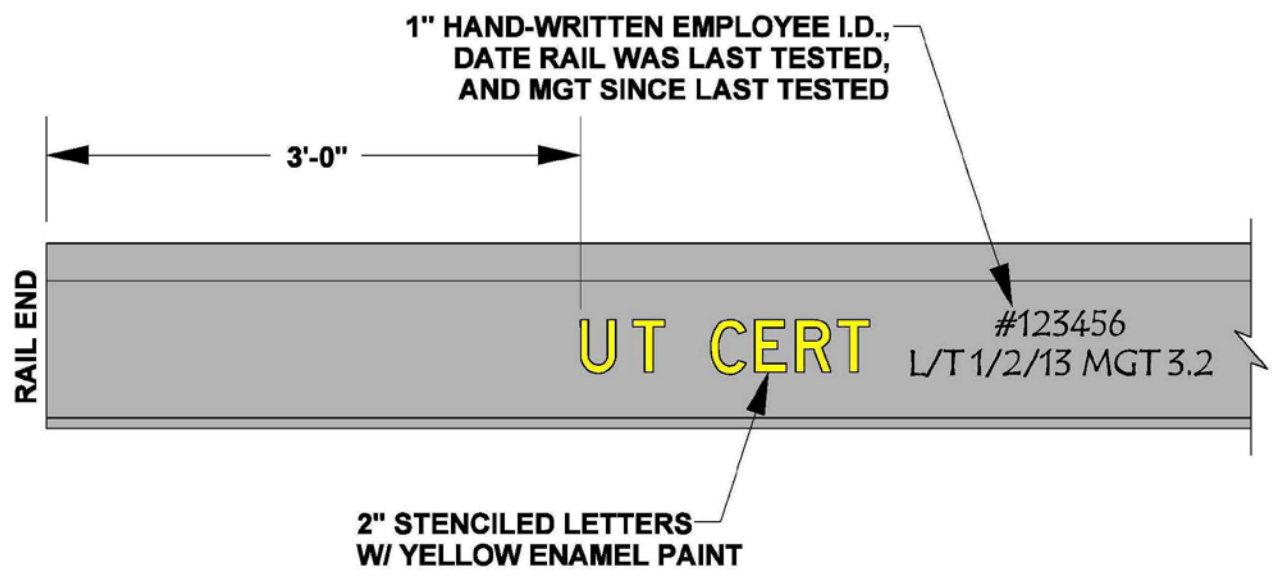

Figure 4-NN

3. **Rails with a roll date no older than 1975 for 133# and 136# rail sections.**

   Rails found to be free of internal defects via full ultrasonic inspection in a facility or with portable unit will be marked and stenciled with the following: Stencil UT TESTED, 3 feet from each rail end and a minimum of every 15 feet thereafter for rails greater than 30 feet in length, using Safety Yellow enamel paint. See Figure 4-OO-1.

4. **Rail older than 1975 for 133# and 136# rail sections. - (Limited Use)**

   Rails found to be free of internal defects via full ultrasonic inspection in a facility or with portable unit will be marked and stenciled with the following: Stencil UT LTD USE, 3 feet from each rail end and a minimum of every 15 feet thereafter for rails greater than 30 feet in length, using Safety Yellow enamel paint. See Figure 4-OO-2. Use of this rail is limited to only locations where all three provisions in Section 4.18.5, E are met. *Refer to the second bullet and the text within the boxed area.*

5. Mark rail with employee ID# or vendor identification and date inspected. When rail found to be defect free of defects via full ultrasonic inspection, employee ID# or Vendor Identification must be placed 3 feet from each rail end and a minimum of every 15 feet thereafter for rails greater than 30 feet in length. Markings shall be placed on the web in 1-inch letters and numbers using metal marker item number 410-4352.

6. To enable rail test personnel or vendor to ultrasonically test rail at field locations, then properly mark and stencil rail, field personnel must do the following:

   - Place rail on a flat surface with access for walking with portable equipment.
   - Place rail to allow full access to the rail head.
   - Space rail far enough apart to allow application of Stenciling and marking on rail web.
   - Prepare rail head by removing dirt, debris and heavy rust.
   - Inspect rail branding and heat numbers, then remove rail that does not meet requirements outlined in Section 4.18.5, E, for applicable trackage.

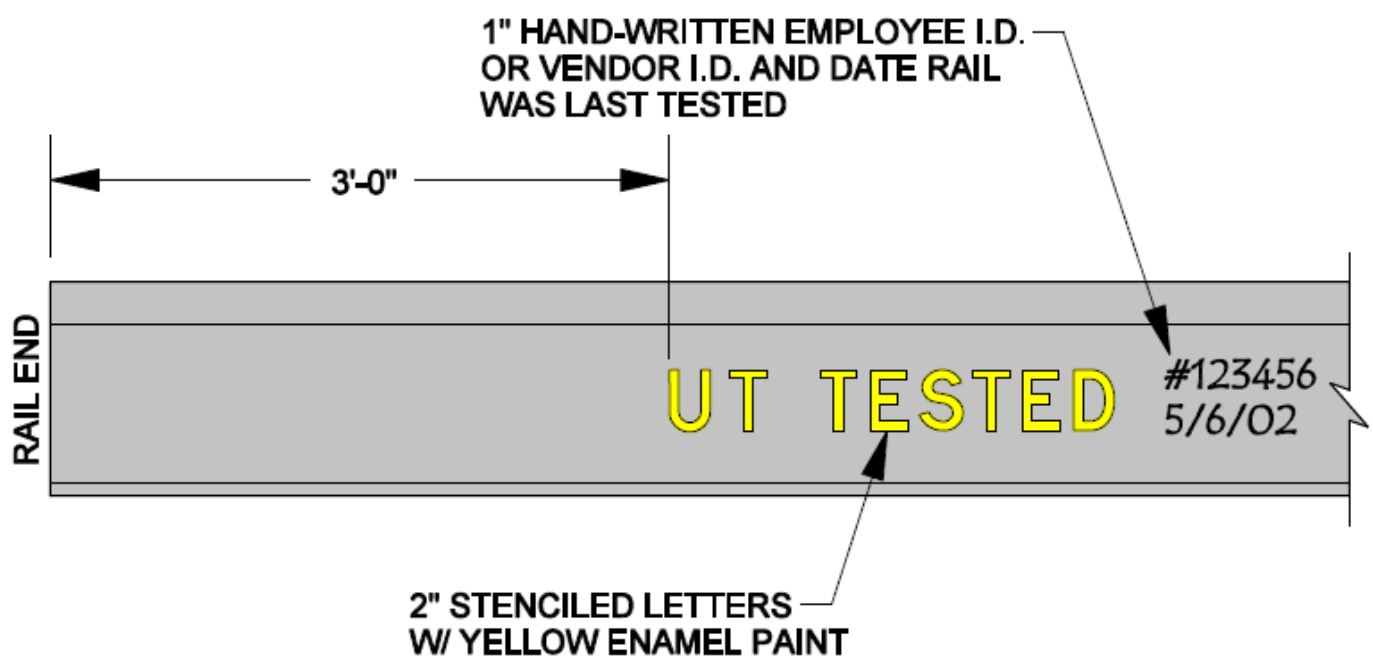

Figure 4-OO-1

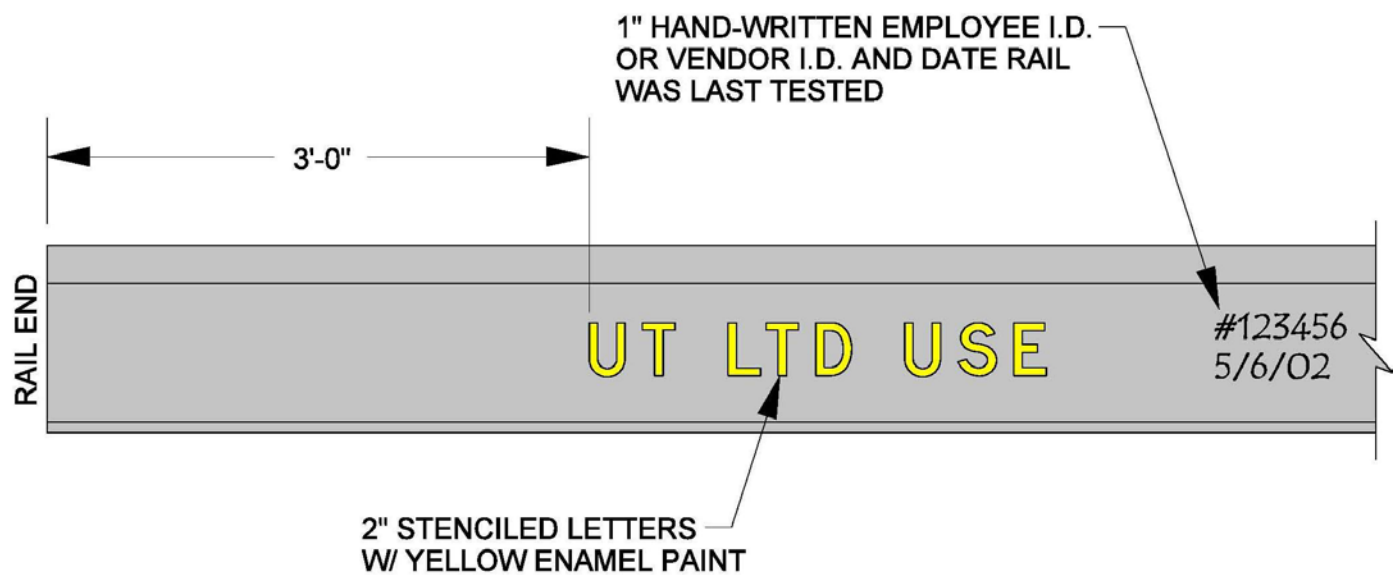

Figure 4-OO-2

7. Designated Non Main Line rail – Rail which does not meet criteria for Mainline use as defined in Section 4.18.5, E, may be acceptable for use as maintenance replacement plug rail in Yard or Industry tracks. To designate this usage, rails found to be free of internal defects via full ultrasonic inspection in a facility or with portable unit will be marked and stenciled with the following: Stencil UT Y / I, 3 feet from each rail end and a minimum of every 15 feet thereafter for rails greater than 30 feet in length, using

Safety Yellow enamel paint. See Figure 4-OO-3. Certified rail should be used as replacement maintenance rail in all critical Yard and Industry leads or tracks, when available.

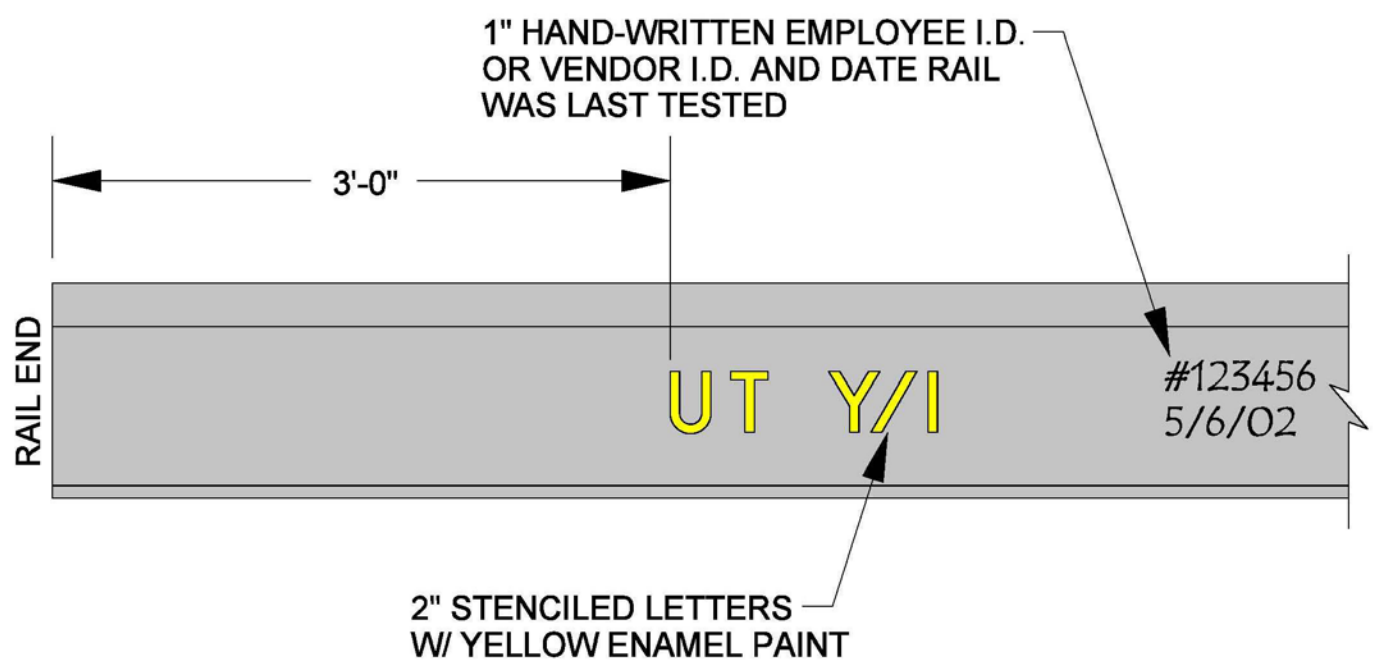

Figure 4-OO-3

8. Scrap Rail - When internal defects are found in replacement plug rail through a full ultrasonic inspection, or when the inspector finds evidence of internal defects found during a previous test, then entire rail (weld to weld) is to be scrapped. * Exception: - Bolt hole defects and head and web separations within joint areas do not require entire rail be scrapped. Refer to Section 4.18.3, Number 5, for additional rail to be scrapped. Stencil SCRAP, 3 feet from each rail end and a minimum of every 10 feet thereafter for the entire rail length, using Safety Red enamel paint. See Figure 4-PP. The SCRAP stencil is item number PC-00608.

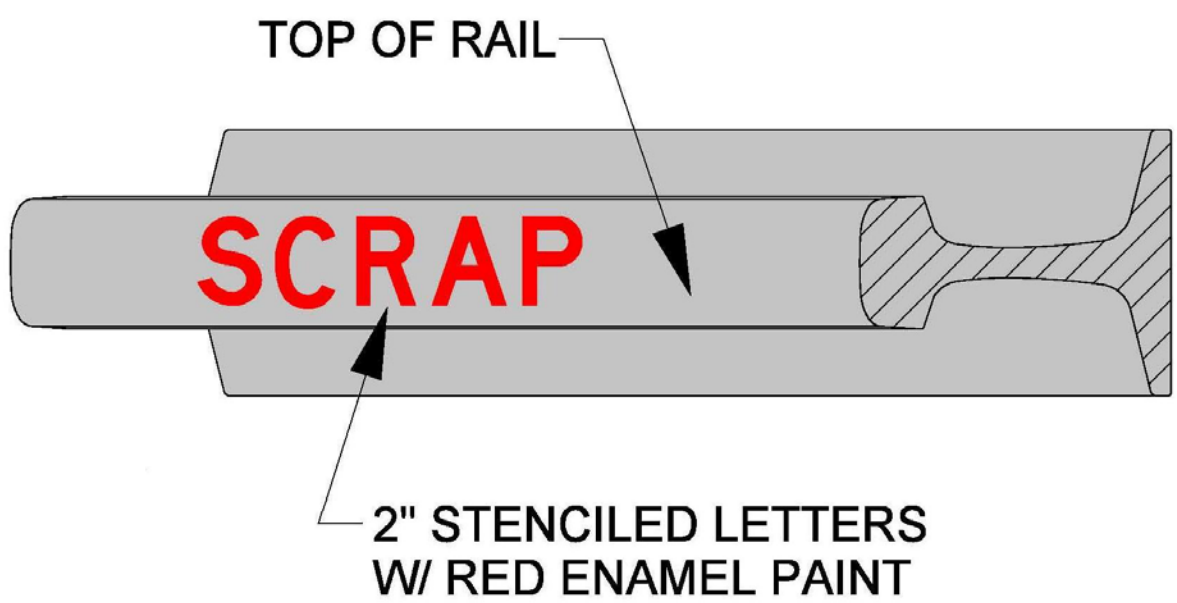

Figure 4-PP

E. New or Service Failed Rail

1. Old or previous UT TESTED or UT CERTIF. certification markings shall be removed/painted over when rails are removed on account of a Service Failure, detector car defect or during other normal maintenance rail changes and scrapped.
2. New rail is certified defect free at steel mill and does not need marked to be stenciled, if it has not been in service.
   - When new rail is used as replacement plug rail write: “NEW RAIL”, date installed and employee ID, in 1-inch letters (Refer to Section 4.18.7, D. Marking, and Figure 4-NN).
3. When a rail is removed because of a service failure defect, rail must not be reused until it is ultrasonically tested.

Exception: Service failed rails with Bolt Hole, Weld or Head and Web-joint defects may be reused after cropping, provided that it meets MGT and elapsed time requirements for tested rail. These rails shall be tested or re-certified and marked per instructions.

4.18.8 Relaying Second Hand Rail Cascaded via Rail Trains

All secondhand CWR strings cascaded via rail trains for relaying main line tracks shall have 25 mph slow order until it has been ultrasonically inspected at the new location.

4.18.9 Passing Trains over Broken Rails or Pull-Aparts

Any trackman or signalman with at least one year of maintenance-of-way or signal experience may pass trains over broken rails provided that they meet the minimum qualifications as set forth under rule 213.7 of the FRA Track Safety Standards, which include all of the following:

1. Has been trained and passed examination within the last two years in the movement of trains over broken rails and pull-aparts.
2. Train speeds are limited to a maximum of 10 MPH over the broken rail or pull-apart.
3. The qualified employee must visually supervise all train movement over the broken rail and be able to communicate with the engineer so that he can stop the train if necessary.
4. Someone is notified and dispatched who is fully qualified under FRA rule 213.7 (a) or (b) to relieve them for the purpose of authorizing movements and effecting repairs.
5. Do not operate over any break on a curve (regardless of length of gap) until temporary

repairs have been made.

6. Do not operate over any gap in the rail (from a broken rail or pull-apart) greater than 3 inches until a 213.7 a or b qualified trackman has taken charge.
7. Do not operate over a break or pull-apart with a gap greater than 4 inches until temporary repairs have been made.
8. Do not operate over any break or pull-apart with a gap greater than 7 inches until permanent repairs have been made.

Note: Safe train movement is of the first importance. The final determination whether it is safe to pass a train over a broken rail or pull-apart is left to the employee on the ground watching the train over the defect. Other factors that must be considered when making this determination are:

- **Condition of the ties under the break or pull-apart.**
- **Alignment of the gage and running surface of the rail ends.**
- **For a broken rail, the type of break (vertical or angular).**
- **General surface and alignment of the track.**

Use the summary matrix in Table 4-T to determine requirements for passing trains over broken rails or pull-aparts.

Passing Trains over Broken Rails and Pull-Aparts	
Gap of Rail Ends	**Required Authorization**
3 inches or less	Trackman or Signalman 213.7 (A, B or C)
4 inches or less	Trackman 213.7 (A or B)
4 to 7 inches	Trackman 213.7 (A or B)
More than 7 inches	N/A

Table 4-T

4.18.10 Temporary Repairs to Broken Rails and Pull-Aparts to Pass Trains

Temporary repairs of a broken rail may consist of one of the following:

1. If the gap in the break is less than 4 inches, apply joint bars with one bolt through the break and one of the center pair of joint bar holes.
2. If the gap in the break is between 4 and 7 inches, apply a 4-inch “dutchman” with a bolt hole through the center with a pair of joint bars. Secure the “dutchman” with a bolt inserted through the hole in the “dutchman” and one of the center pair of joint bar holes.
3. Issue a Form A slow order over the temporary repair not to exceed 10 mph. Consider walking speed if the break is in a curve.
4. Supervise every train movement over the temporary repair. Ensure that you have a means of radio communication with the train crew to:
   a. To advise the train crew when the rear car has cleared the temporary repair.
   b. Stop the train if necessary.

   The employee must be qualified under FRA 213.7 A or B.

Temporary repairs of pull-aparts may consist of one of the following:

1. If the gap is less than 4 inches, secure the joint bars by tightening all bolts in one of the rail ends.
2. If the gap in the break is between 4 and 7 inches, apply a 4-inch “dutchman” with a bolt hole through the center with a pair of joint bars. Secure the “dutchman” per Figure 4-QQ with a bolt inserted through the hole of the “dutchman” and one of the center holes of the joint bars.

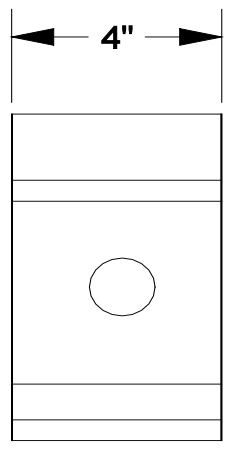

Figure 4-QQ

4.18.11 Broken Rail and Derailment Reporting

A. Service Failure Broken Rail Reporting

Definition: A service failed broken rail is defined as an unexpected break in the rail, usually in two or more pieces with separation **OR** rail with a substantial portion of the rail head, web or base missing.

When service failed broken rails occur, collect information contained in Engineering OE Production Log ***(Form: PB-24021)***. Following repair or replacement of the broken rail, report the service failure by one of the following means:

1. **Service Failure Reporting Call Desk** – via a phone call to desk personnel.
   - Toll Free Phone: (855) 816-7511.

- Fax: (402) 501-1739.
- Email: SF Desk (using Lotus Notes) or sfdesk@up.com (outside email).

2. **TEP (Time Entry Portal) – OE Production Reporting** using the correct Work Codes for each failure type.
3. **Track Maintenance Planner (TMP)**, – Web base reporting, From the UPRR Employee home page *Go to:* ***Departments > Engineering > Track Maintenance > Manage > Service Failure (Broken Rail)***

Using a digital camera, capture pictures of the rail while still in track and pictures of each full rail end. Email photos to: sfdesk@up.com. When sending pictures, include: Fail date, Subdivision, track, milepost (including decimal) and rail side (Left or Right). Provide a contact with phone number for follow-up questions.

When broken rail failures occur within 30 days or within 1 MGT of the last detector car test, secure and store fractured rail ends. Using a permanent metal marker, write the following information on the rail: Fail date, subdivision, track, milepost (including decimal) and rail side (Left or Right). Store rail at a location designated by Manager Track Maintenance until inspected by Rail Assessment Group manager, or Rail Test Operator.

B. Broken Rail Derailment Reporting

When a derailment is being investigated and the cause is not readily apparent and a broken rail cannot be ruled out immediately, collect and include the following information in derailment reporting.

Rail section (weight), Manufacture, Year/Month rolled, Standard/Premium, and rail heat number (including ingot number, “A” rail etc.).

1. Rail profile, head width and height. (Approximate gage face loss and height loss).
2. Rail condition, running surface. (shell, head checks, slivers, grease, rust or recently ground).

If broken rail is entered as the cause of the derailment, rail shall be sent to the: R & D Lab; 5697 N. 13th St.; Omaha, NE 68110. In addition, a SERVICE FAILURE report must be completed in the TMP, within 7 days, *Go to:* ***Engineering > Track Maintenance > Manage > Service Failure (Broken Rail)*** to find report form.

4.19 Rail Lubrication

For questions regarding wayside lubrication including product, parts, maintenance, placement, or projects please contact the Manager of Rail Life Extension at 402-544-4701.

Apply rail lubrication when:

- The rail shows excessive wear.
- Noise levels are high from squealing wheels.
- Reducing lateral forces is desirable.
- Operating conditions warrant its use.

4.19.1 Methods of Lubrication

When lubricating rails, apply track lubrication through:

- Wayside systems.
- In-train systems.
- Manual applications with a brush or spray.
- When applying lubricant to the track it is important that both rails be lubricated. This is especially important in curves, as excessive lubrication of the high rail and poor lubrication on the low rail can result in a low rail rollover condition leading to a derailment.

4.19.2 Lubricants

Follow these requirements for using lubricants:

1. Use only company-approved products for lubricants.
2. Dispose of used containers or contaminated materials according to company policy and local, state, and federal guidelines.

4.19.3 Locations for Rail Lubrication Application

Follow these requirements for applying lubrication to main and branch lines:

1. Apply lubrication to track when any of the following conditions exists:
   - Curvature is 1 degree 30 minutes or greater, and tonnage exceeds 50 MGT per year.
   - Curvature is 2 degrees or greater on concrete ties.
   - Curvature is 3 degrees or greater.
   - Curvature where wide gage is present due to excessive rail wear.
2. Lubricate other tracks such as wyes and frequently used industrial leads where conditions warrant.
3. When possible, try to avoid installing lubricators closer than 500 feet from the start of an approach to an automatic crossing warning device.

If unclear as to where the start of the approach is located, contact the appropriate Signal representative.

4. Refer to Standard Drawing No. 6040 for wayside lubrication installation.

4.19.4 Suspension of Lubrication for Program Maintenance and Grinding

Discontinue lubrication before program maintenance including rail relay, tie projects, under cutters, TRT projects, CAT teams and rail grinding projects.

Follow the guidelines in Table 4-V for discontinuing rail lubrication.

Guidelines for Discontinuing Lubrication	
Track	**Discontinue Lubrication:**
Main line above 25 MGT annually	3 days prior to work
Main line below 25 MGT	10 days prior to work

Table 4-V

During rail grinding operations, remove the plunger block or ramp assembly and all distribution bars on wayside systems to allow for grinding through the lubricator site.

Resume lubrication immediately after the scheduled work is completed.

4.20 Rail Grinding

4.20.1 General

Production rail grinding prolongs rail life by reducing rail surface corrugations, spalling, head checks, surface cracking, and flow. Grinding reshapes the rail head to a profile that provides improved wheel contact. If rail is allowed to deteriorate as corrugations, shelling, and rail batter increase, the following conditions will result:

- Decreased rail life due to internal rail defects
- Poor riding surface
- Spike lift
- Tie and ballast breakdown
- Damage to rolling stock
- Gage widening

Rail/curve relay areas will not be ground if designated to be replaced within 6 months.

- Exception: Can’t test/difficult to test rail.

4.20.2 Corrective, Maintenance, and Preventive Grinding

The three types of rail grinding practices are corrective grinding, maintenance grinding, and preventive grinding.

Follow these requirements:

- **Corrective Grinding:** Remove visible rail damage as required by grinding the rail head heavily. This practice usually requires 5 to 7 passes. Curves every 90 MGT. Tangent every 120 MGT.
- **Maintenance Grinding:** Perform scheduled out-of-face grinding at an increased speed on a frequent cycle based on tonnage and track geometry. Maintenance grinding removes surface defects and cracks before they are allowed to propagate. This practice requires 2 to 4 passes. Curves every 60 MGT. Tangent every 90 MGT.
- **Preventive Grinding:** Perform high-speed out-of-face grinding on a regular schedule based on tonnage and curvature. This practice requires 1 to 2 passes. Curves every 30 MGT. Tangent every 60 MGT.

Table 4-W below shows the preventative grinding cycles.

Preventive Grinding Cycles		
Track Geometry	**Concrete Ties Rail**	**Wood Ties Rail**
Sharp Curves (> 3°)	Premium	Premium
	15 to 30 MGT	15 to 30 MGT
	Standard	Standard
	15 to 25 MGT	15 to 25 MGT
Mild Curves (> 0° < 3°)	Premium	Premium
	45 to 70 MGT	45 to 60 MGT
	Standard	Standard
	30 to 45 MGT	30 to 50 MGT
Tangent Track	Premium	Premium
	90 to 100 MGT	90 to 100 MGT
	Standard	Standard
	60 to 75 MGT	60 to 75 MGT

Table 4-W

4.20.3 When to Grind and Type of Grinding

Use Section 4.19.2 as a guide for type of grinding to use. In addition, the following will also be used as a guide to the type and timing of grinding to be done.

1. Hy-rail inspection by grinding supervisor and local Service Unit representative.
2. Surface defects, number, length and depth.
3. Quality of detector car tests.
4. New rail will be ground at the first opportunity.
5. Grinding will be limited to a maximum of 3 passes on the low rail in most cases. This is performed to avoid development of vertical split heads due to a sudden change in wheel loading on the railhead.
6. Rail defect history.

4.20.4 Grinding Requirements

Determine grinding requirements by:

- MGT of traffic.
- Recorded measurements of growth rate of corrugations. Take measurements manually using a 24-inch straightedge and a Starrett taper gauge graduated in thousandths of an inch.
- Measurements taken electronically by a track evaluation car.

4.20.5 Classification of Rail Condition for Grinding

1. High rail gage shelling:
   - **Mild:** Very small cracks that can be seen only under close observation. The area in question has a smooth surface.
   - **Medium**: Cracks are evident. A shiny surface may be visible along the gage corner. The rail feels rough over the area in question. Metal filings may be evident along the web and base of the rail.
   - **Severe:** Head checking is evident. Major cracking exists along the affected area. Some minor spalling may be detected. Metal filings as well as flakes may be visible along the web and base of the rail. Gage corner has a shiny contact band.
2. Low rail gage spalling:
   - **Mild:** Cracks are small and are visible only under close observation. The affected area has a smooth surface.
   - **Medium:** Cracks are evident. Mild corrugation may be evident. The rail feels rough over the area in question. Small pits in the surface of the rail may be evident.
   - **Severe:** Spalls are evident. Major cracking exists along the affected area. Large pits have developed in the rail head. Corrugation is visible.

4.20.6 Preparation

Before grinding for joint condition, prepare for grinding as follows:

1. Surface the track and tighten bolts.
2. Remove crossing planks, rail lubricators, and wheel sensors at hot box detectors and AEI sites.
3. Inform the Dispatch Center before grinding to maximize track time and coordinate train movement.
4. At all times, and especially in areas where fire risk is high, current instructions for the Union Pacific Railroad Engineering Department's Fire Prevention Plan must be complied with. See Section 6.3 Fire Protection.
5. Ensure that the rail grinder is filled with water and that all worn stones have been replaced.

4.20.7 Grinding on Bridges

1. All concrete and steel ballast deck bridges in scheduled grinding limits will be ground.
2. Bridges with wood ties on steel girders (and no other wood on bridge except timber guard rails and walkways) and timber ballast deck bridges will be ground when the bridge is part of a curve or tangent scheduled for grinding.
   a. Grinder will operate all side sprays and cannons, front and rear.
   b. Grinder will operate front and rear tie sprays with at least a .03% foam mix. If front tie sprays are not operable, grinder will pre-wet the bridge before grinding, with the remaining tie spray and front and rear water cannons (one time only).
   c. The Contractor’s hy-rail water truck which is following the grinder operation will manually or automatically scan the entire bridge deck, sides and areas below the bridge with an infra-red heat sensing device to detect any hot spots. The water truck will not leave the bridge area until the entire bridge and surrounding area is shown to be negative with the scanning device.
   d. Service Unit B&B forces must follow Fire Prevention Plan. See Section 6.3 Fire Protection.
3. Open deck timber stringer bridges will be ground when falling in the scheduled grinding limits, but only after the following is completed:
   a. Grinding Supervisor or Service Unit manager determines rail on bridge requires

grinding.

b. Grinding Supervisor or Service Unit Manager has contacted the local B&B forces, notified them of the bridge(s) to be ground on their territory and ascertained from them that they will be on site for the grinding at the time of grinding and will protect the bridge for four hours after the last grinding pass has been made.

4. The following applies to the LORAM 400 series production rail grinders only.
   a. No open deck timber stringer bridges, open deck wood ties on steel girders or timber ballast deck bridges will be ground except as identified in curves. Additional support will be provided by a second contractor water truck equipped with infrared cameras to inspect bridges in curves.
      i. When one water truck is not functioning properly, rail grinding operations will continue but, no grinding will be done on any bridge structure. If both water trucks cease to function properly, rail grinding operations will be suspended.

4.20.8 Service Unit Requirements for Assisting Production Rail Grinding

A minimum of **two** Service Unit (SU) employees are required for the production rail grinding operation. **One** employee has to be familiar with the territory and be a qualified EIC, riding on the grinder and directing the movement. The EIC must be on the leading end of the grinder while traveling. This employee must have the current system general orders, subdivision general orders, timetable, emergency response plan and any Form B's or slow orders that may affect the grinder that day. **One** employee to protect the contractor's hy-rail water truck and patrol the right of way and bridges for fires, hy-railing if necessary. An additional vehicle will be used when available.

Service Unit personnel are also responsible for protecting the Contractor's grinding equipment at the daily tie-up location per current UPRR rules. Contractors will provide private locks for locking switches, derails, etc. Service Unit EIC will not leave the grinder until the grinder is done moving for the day.

Provide a track at least 900' long to tie grinder up at the end of the shift. This track should be at least 25' from the main line to avoid placing slow orders on the main line (if not, a 40 MPH should be placed using T-50, 25 MPH if the sight distance is less than 880 ft.). If at all possible, a fire hydrant should be close to this tie up track. Contractor's employees stay on this equipment and it has to be treated as occupied camp cars. **The grinder cannot be moved from tie up location after being released from service until the next work day's agreed upon starting time.**

GENERAL INFORMATION

Contractors pay for their own fuel and water. Railroad employees need to assist them whenever possible in procuring these supplies. If unable to tie-up close (300') to a fire hydrant, railroad employees need to provide them a track that has road access on one side or the other.

Normal workweek for the production grinder is six, ten to twelve hour days, Monday through Saturday. More than ten hours should be worked anytime track time is available. Start time can vary with Service Unit requirements and track time opportunities. Allow at least one-half hour at starting time for a job briefing before requesting track time. Service Unit support personnel should be on the grinder at the agreed upon starting time.

4.20.9 Service Unit Requirements for Assisting Switch Rail Grinding

1. A minimum of **two** Service Unit employees are required for the switch rail grinding operation. **One** employee has to be familiar with the territory and be a qualified EIC, riding on the grinder and directing the movement. The EIC must be on the leading end of the grinder while traveling. This employee must have the current system general orders, subdivision general orders, timetable, emergency response plan and any Form B's or slow orders that may affect the grinder that day. **One** employee with an off-track vehicle with at least 50 gallons of water with foam as required by the fire prevention plan.
2. Switch rail grinding will fill in the areas at switches, road crossing and hot box detectors that the production rail grinders are unable to grind.
3. Curves and mainline rails marked as difficult to test due to rail conditions will be ground if a production rail grinder will not be on the subdivision within 3 months.
4. Sidings marked as difficult to test due to rail conditions will be ground if track time allows.
5. An 8-inch radius shall be ground on the running rails of the switch.
6. Component grinding by local support forces shall be performed at the time of the switch grinding, whenever possible.
7. When grinding road crossings, only UP employees will provide flagging protection. The EIC may be required to assist on providing this flagging protection and must also give grinder operator permission to make change in direction movements.
8. Service Unit personnel are responsible for protecting the Contractor's grinding equipment at the daily tie-up location per current UPRR rules. Contractors will provide private locks for locking switches, derails, etc. Service Unit EIC will not leave the grinder until the grinder is done moving for the day, protection is provided and the de-briefing with the Contractor Superintendent has been completed.

NOTES

5.0 TURNOUTS

5.0 Turnouts 5-3

5.1 Turnout Identification 5-3
- 5.1.1 General 5-3
- 5.1.2 Turnout Types 5-4
  - A. Standard Wood 5-4
  - B. Premium Wood 5-4
  - C. Concrete 5-4
- 5.1.3 Turnout Construction 5-4
- 5.1.4 Speeds through Turnouts 5-4

5.2 Switches 5-5
- 5.2.1 Switch Types 5-5
  - A. Hand-Operated 5-5
  - B. Spring-Operated 5-5
  - C. Electric Lock 5-5
  - D. Dual Control 5-5
- 5.2.2 Switch Targets 5-5
- 5.2.3 Switch Stands 5-5
- 5.2.4 Switch Stand Adjustment 5-6
- 5.2.5 Switch Machines and Hollow Steel Ties 5-7
- 5.2.6 Switch Locks 5-7
- 5.2.7 Switch Point Locks 5-8
- 5.2.8 Switch Point Clamps 5-8
- 5.2.9 Switch Point Rollers 5-8
- 5.2.10 Switch Point Guards 5-8

5.3 Switch Rods 5-9
- 5.3.1 Connecting Rods 5-9
  - A. Connecting Rod Length 5-9
  - B. Connecting Rod Repairs 5-9
  - C. Connecting Rod Installation 5-9
  - D. Spring Switch Buffer Rod 5-10
- 5.3.2 Connecting Rod Bolts 5-10
- 5.3.3 Switch Rod Use 5-10

5.4 Switch Points 5-10
- 5.4.1 Switch Point Use 5-10
- 5.4.2 Switch Point Maintenance 5-12
- 5.4.3 Heel Blocks 5-13
- 5.4.4 Stock Rails 5-14
- 5.4.5 Stock Rail Replacement 5-14
- 5.4.6 Stock Rail Use 5-15
- 5.4.7 Plating in Turnouts 5-15

5.5 Frogs 5-15
- 5.5.1 Identification of Frogs by Number 5-16
- 5.5.2 Frog Types 5-16
  - A. Railbound Manganese Frog (RBM) 5-16
  - B. Rigid Bolted Frog 5-16
  - C. Spring Frog 5-16
  - D. Solid Manganese Self-Guarded Frog (SMSG) 5-17
  - E. Movable Point Frog (MPF) 5-17
  - F. Jump Frog 5-17
  - G. Crossing Frog (Diamond) 5-18
- 5.5.3 Frog Wear Non-Conformal Frogs (RBM, SMSG, Jump and Diamonds) 5-21
- 5.5.4 Frog Wear Conformal Frogs (Heavy Point RBM) 5-21
- 5.5.5 Frog Guard Rail Size and Length 5-22
- 5.5.6 Frog Bolt Sizes and Torque 5-22
- 5.5.7 Frog Bolt Installation 5-22
- 5.5.8 Frog Gage Plates 5-23
- 5.5.9 Guard Check Gage 5-23
  - A. Gage Settings for Standard Point Frogs. 5-24
  - B. Gage Settings for Heavy Point Frogs 5-25
- 5.5.10 Jump Frogs 5-25
- 5.5.11 Welding Repair of Guard Rails, Frogs and Diamonds 5-26
- 5.5.12 Spring Frog Inspection and Maintenance Procedures 5-26
  - A. Frog Body 5-26

B. Handling 5-27
C. Surface and Line 5-27
D. Toe Area of Frog 5-27
E. Spring Wing 5-28
F. Horns and Hold Downs 5-29
G. Spring Box Assembly 5-30
H. Spring Replacement 5-31
I. Hydraulic Retarder 5-31
J. Retarder Replacement 5-32
5.5.13 Welded Spring Manganese (WSM) Frogs 5-33
5.5.14 Movable Point Frog Inspection and Maintenance 5-33
A. Frog Body 5-33
B. Surface and Line 5-34
C. Frog Point Bolts 5-34
D. Slide Plate 5-34
E. Point Wear 5-35
F. Lubrication 5-35

5.6 Turnout Maintenance 5-35
5.6.1 Switch Rods 5-35
5.6.2 Switch Points 5-36
A. Switch Point Throw 5-36
B. Switch Point Fit 5-36
C. Switch Point Wear 5-37
5.6.3 Frog and Guard Rails 5-38
5.6.4 Lubrication 5-38
5.6.5 Cleaning 5-38
5.6.6 Switch Heaters 5-38
5.6.7 Component Warranty 5-39

5.7 Derails – Permanent & Portable 5-39
5.7.1 Installation of Permanent Derails 5-39
5.7.2 Hinged or Sliding Derail Installation 5-40
5.7.3 Use of Portable Derails 5-39

5.8 Foul Point 5-40

5.9 Frog Grinding and Slotting 5-40

5.0 Turnouts

5.1 Turnout Identification

5.1.1 General

Follow these general requirements for turnouts:

1. Identify turnouts by their frog number. Refer to Standard Drawing No. 0080 for recommended turnout applications.
2. Determine if a turnout is a left- or right-hand turnout by determining the direction of the diverging track. To do this, stand in the track ahead of the switch and face the frog.
   - If the diverging track is on the left, it is a left-hand turnout. See Figure 5-A.

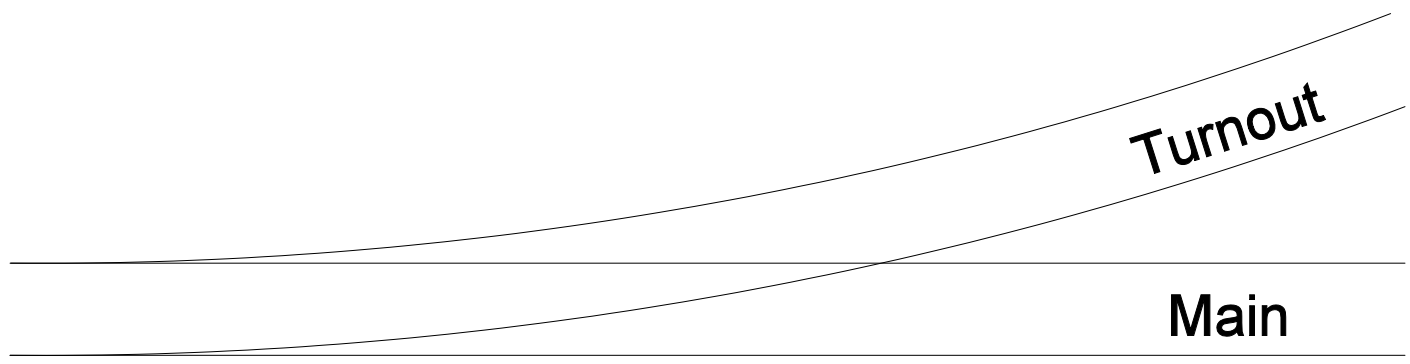

Figure 5-A

   - If the diverging track is on the right, it is a right-hand turnout. See Figure 5-B.

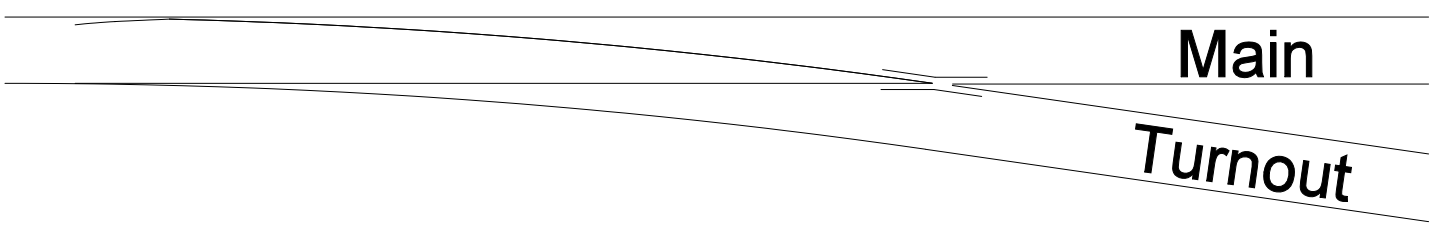

Figure 5-B

   - If both tracks diverge an equal amount, it is an equilateral turnout. See Figure 5-C.

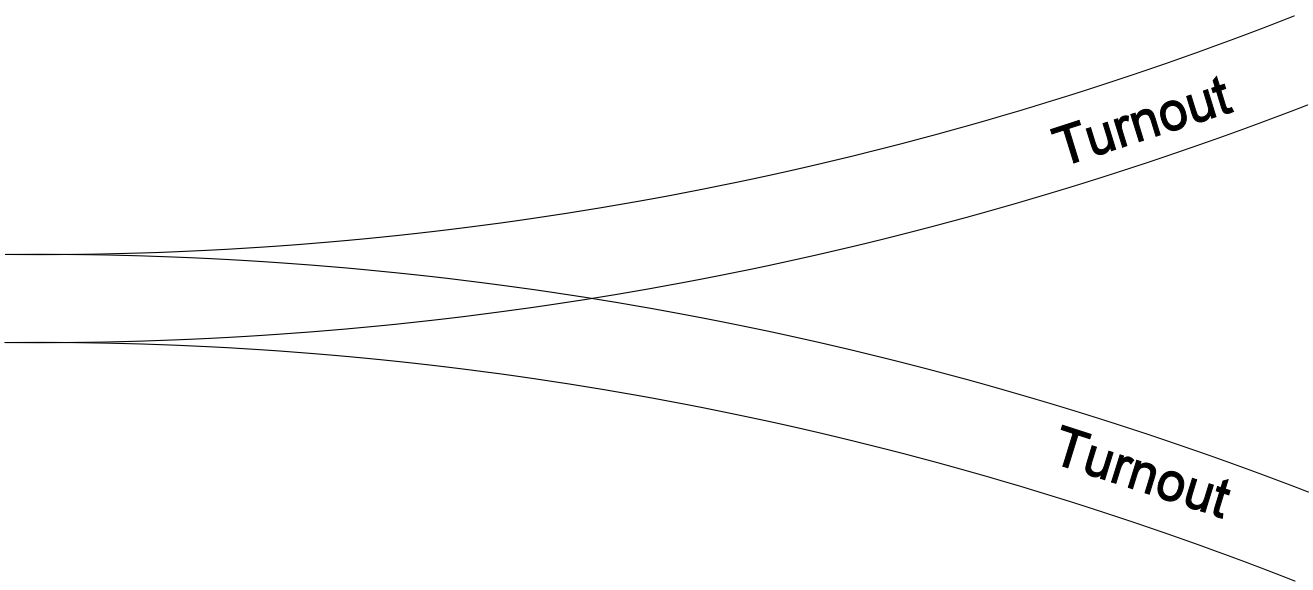

Figure 5-C

3. Some general turnout terms are identified in Figure 5-D.

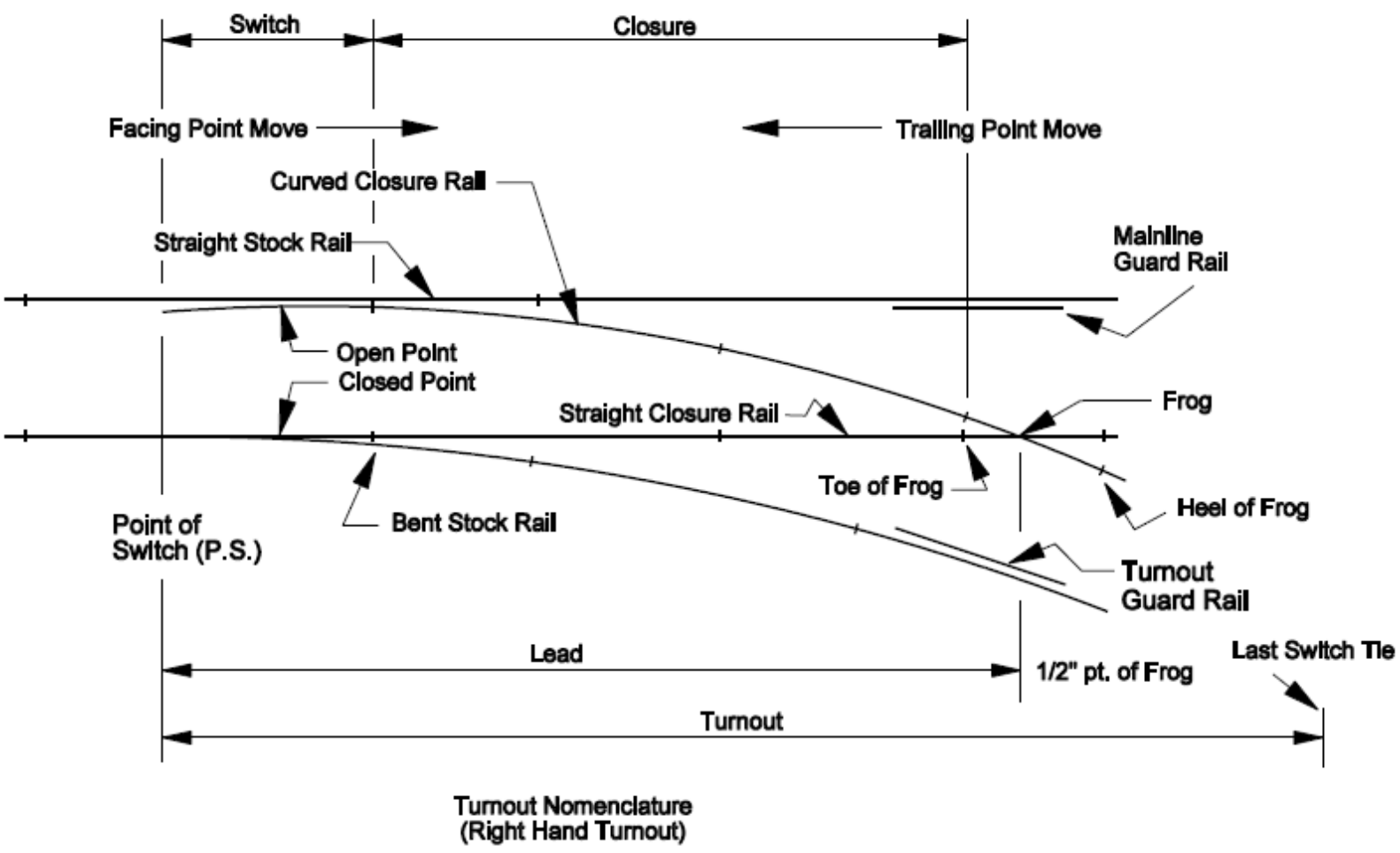

Figure 5-D

5.1.2 Turnout Types

Subsections A, B, and C describe turnout types.

A. Standard Wood

Standard wood turnouts have these characteristics:

- They consist of wood ties, conventional cut spike fasteners, and rolled steel tie plates.
- The switch and frog portion of the turnout uses plates with elastic fastenings.
- Switch points and stock rails are Samson design.

B. Premium Wood

Premium wood turnouts have these characteristics:

- They consist of hardwood ties, elastic type fasteners, and wood screw lags.
- Switch points and stock rails are Samson design.

C. Concrete

Concrete turnouts have these characteristics:

- They consist of concrete ties, tie pads, elastic type fasteners, and coach screws for special plating.
- Switch points and stock rails are Samson design.

5.1.3 Turnout Construction

Follow these requirements for constructing turnouts:

1. Construct turnouts as prescribed in the UPRR Track Standards.
2. Construct turnouts using head hardened rail. Intermediate strength head hardened rail may be used where authorized by UPRR standards.
3. Do not use rails of different sizes in the same turnout except in case of emergency where transition rails are utilized.
4. Spike turnouts according to Standard Drawing No. 0453.
5. Box anchor all switch ties to the extent that the anchors will not interfere with the proper operation of the turnout. Refer to Standard Drawing No. 0460 and Section 4.17 Rail Anchors for further information.

5.1.4 Speeds through Turnouts

Unless otherwise approved by the AVP Engineering Design, the maximum allowable speeds through the diverging route of a lateral turnout installed in tangent track are shown in Table 5-A.

NOTE: Any conflicting Special Instructions or General Orders will supersede any speed posted in Table 5-A.

Turnout Size	Switch Point Length	Point Type	Recommended Speed (MPH)*
Less than 7	11'	Straight	5
7 to 8-1/2	15' or 16' 6"	Straight	10
9 to 10	16' 6"	Straight	15
10	19' 6"	Curved	15
11 to 12	22'	Straight	15
11 to 12	19’ 6”	Curved	20
14	24'	Straight	30
15	26'	Curved	30
16	30'	Straight	35
20	30'	Straight	35
20	39'	Curved	40
24	39'	Curved	50
30	115' 6"	Curved	60

Table 5-A

* The recommendations in Table 5-A are for general informational purposes only. The geometry, and ultimately the speed, through identical size turnouts can vary between manufacturer’s designs. If you have any questions concerning the allowable speed through a turnout, consult with the office of the AVP Engineering Design before making any changes.

5.2 Switches

The switch is the portion of the turnout that consists of the switch points, stock rails and all related OTM in the area from the point of the switch to the heel.

5.2.1 Switch Types

Subsections A through D describe the different switch types.

A. Hand-Operated

A hand-operated switch uses a manually operated switch stand to control the movement of the switch points.

B. Spring-Operated

A spring switch is a hand-operated switch that uses a special buffered connecting rod. The buffered connecting rod incorporates a special spring mechanism designed to permit trailing movements through the switch without throwing the switch. The buffered connecting rod automatically returns the switch points to the original position after they have been displaced by passing wheels in a trailing point movement. See Figure 5-E and Standard Drawing No. 2200. Spring switch points require extra reinforcing to account for the trailing move.

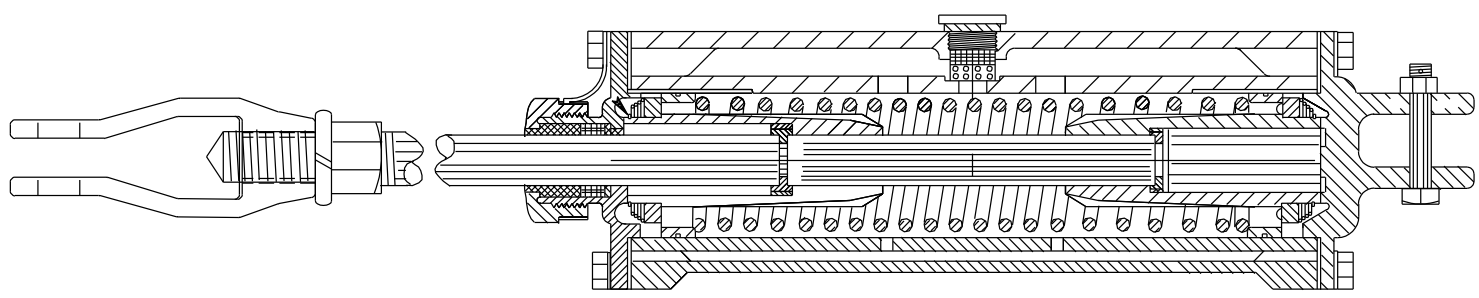

Spring buffered connecting rod

Figure 5-E

Note: Spring Switches must have a facing point signal unless the point is spiked or clamped.

C. Electric Lock

An electric lock is a type of hand-operated switch with an electrically controlled device that mechanically locks the switch. The release of the electric lock is usually controlled by the dispatcher or set on a preset time delay. Refer to Standard Drawing No. 2135.

D. Dual Control

A dual control switch can be controlled manually by means of a hand throw lever or from a remote location (i.e., dispatching center or control tower).

5.2.2 Switch Targets

Use switch targets as follows:

- Ten-inch-diameter switch targets should be used on low mast stands, and 18-inch-diameter targets should be used on high mast stands.
- Switch targets should show red when lined for other than normal movement. Where required by law, green targets will indicate when a switch is lined for normal movement.
- In dark TWC territory a green banner target is required on all main line switch stands.
- Switch targets are not required on dual control switches.
- Standard Drawing No. 2020 shows standard target types.

5.2.3 Switch Stands

Each hand operated switch includes a switch stand that must meet the following requirements:

- It should be set tightly against and attached securely to head block ties.
- It should be placed on the closed point side of the track when the switch is lined for the main track.
  - Some crossover applications may require the stand to be on the open point side of the switch.
- When conditions permit, ground throw type stands should be installed with the handle pointing toward the frog when lined for the main track. See Standard Drawing No. 2101.

1. Refer to the UPRR Track Standards for drawings for standard types of switch stands. Table 5-B lists recommended uses for switch stands.

Switch Stand Model	Features			
	Mast Height	Operating Control	Trailable	In-Track Application
36-EH	High	Raised tri-handle	No	Main and sidings
1008ARS	High	Raised straight handle	No	Main and sidings
112-E	High	Column handle	No	Main and sidings
1004ARS	Low	Raised straight handle	No	Main and sidings
1003ARS	Low	Raised straight handle	Yes	Other than main and sidings
22-E	Low	Raised tri-handle	Yes	Other than main and sidings
Hydra Switch 3000	Low	Push button	Yes	Other than main and sidings

Table 5-B

2. Switch stands recommended for main and sidings may be used on other than main and siding tracks. Switch stands designated for other than main and sidings may only be used for those applications.
3. The Track Department maintains manually operated switch stands. The Signal Department maintains remote control switch machines.
4. Many switch stands recommend annual lubrication and feature external lube holes. It is recommended that oil (Summer-SAE 60, Winter – SAE 40) be utilized as grease may gum up over time.
5. If switch stand is disassembled for repair it is recommended that grease be applied to all internal bushings, slots and bearing surfaces before placing back into service.

NOTE: Do not install trailable automatic type switch stands on main tracks or sidings.

5.2.4 Switch Stand Adjustment

Follow these requirements when adjusting switch stands:

1. To adjust switch stands with adjustable crank eyes and connecting rods, refer to Table 5-C depending on the existing fit of the switch point against the stock rail.

Condition of Points		Action Needed	
Near Point	Far Point	Crank eye on Stand	Clevis on Connecting Rod
Fits properly	Too tight	Screw in	Screw in
Fits properly	Too loose	Screw out	Screw out
Too tight	Fits properly	Screw in	Screw out
Too loose	Fits properly	Screw out	Screw in
Too tight	Too tight	Screw in	None
Too loose	Too loose	Screw out	None

Table 5-C

NOTE: One complete turn of the crank eye or clevis adjusts the switch point approximately 1/8 inch.

2. Adjust the hand lever of a ground-throw switch stand to allow 1-1/2 to 2 inches above the final resting place in the foot latch when the point contacts the stock rail. See Figure 5-F.

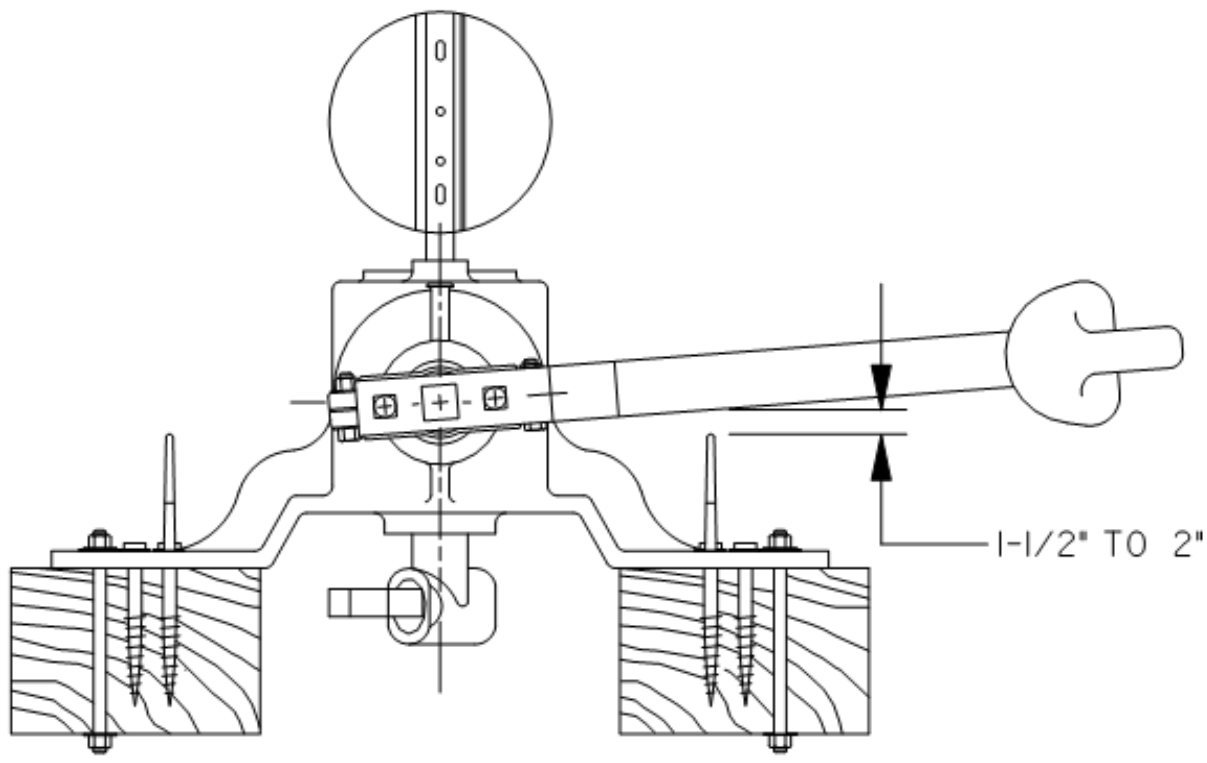

Figure 5-F

3. Keep the hand lever of a column throw switch stand 1/4 inch from the locked position when the point contacts the stock rail. See Figure 5-G.

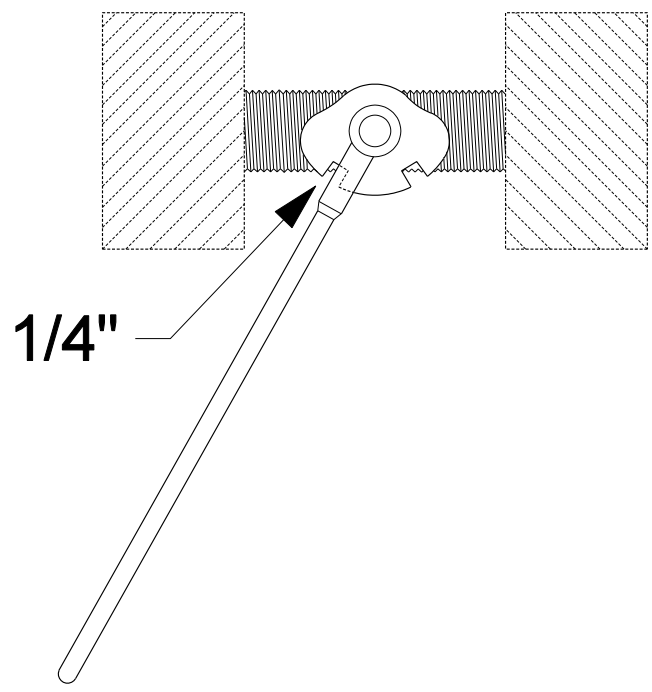

Figure 5-G

4. When adjusting switch stands on spring switches, ensure that the hand lever is **not** in the locked position when the switch points contact the stock rail. The piston travel into and out of the housing of the mechanical switchman should be 1/4 to 1/2 inch when the handle is put into the locked position. See Figure 5-H.

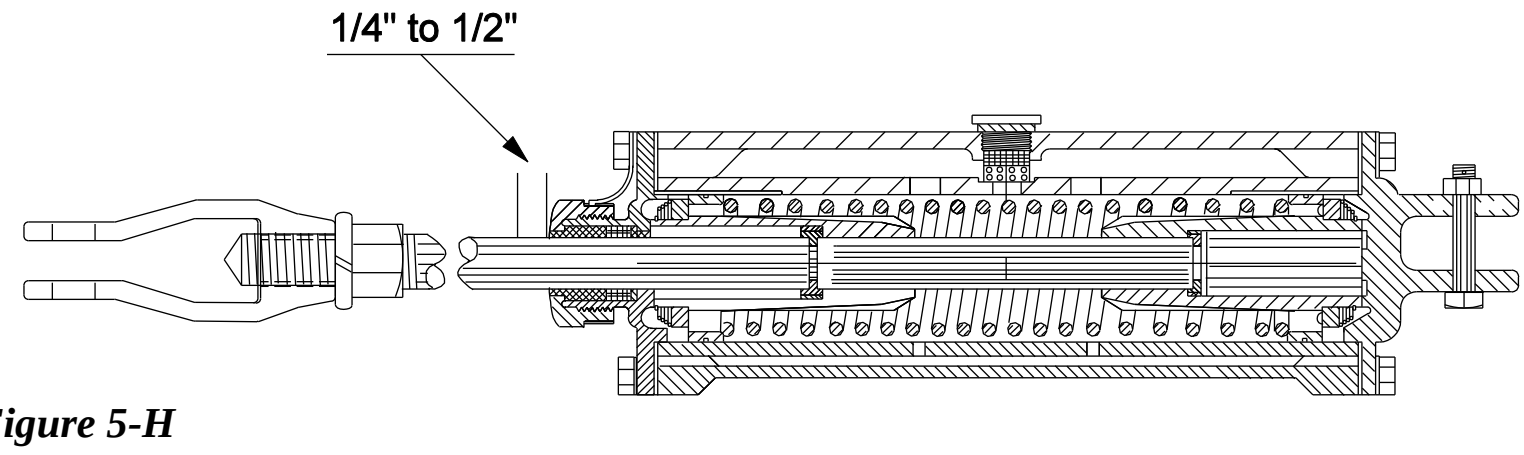

Figure 5-H

5. Do not place high stands closer than 8 feet 6 inches from the center of any track to any part of the stand or target in its most restrictive position.

5.2.5 Switch Machines and Hollow Steel Ties

When installing new switches the general rules are as follows:

1. Switch machine should be configured as follows, see Standard Drawing No. 5002:
   - On all wood turnouts switch machine should be on the turnout side, except where clearance does not permit.
   - On all concrete turnouts less than #20, switch machine should be on the turnout side, except where clearance does not permit.
   - On all concrete turnouts #20 and larger, switch machine should be placed on mainline side, except where clearance does not permit.
   - On all crossovers switch machine should be placed on mainline side, except where clearance does not permit.
2. Hollow steel ties can be utilized to allow for better surfacing capability through the point section of a switch. Hollow steel ties will be utilized on all power operated turnouts #11 and larger where:
   - Turnout is installed in a mainline application with annual tonnage in excess of 40 MGT.

   and/or

   - Concrete Tie Turnouts.
3. Where hollow steel ties are installed:
   - Cover plates should be kept on at all times to prevent ballast from getting into the ties.
   - Ties should be inspected during monthly switch inspections to look for signs of loose or worn insulation between plates and bolts. If loose or worn insulation is found contact Engineering Methods and Research (402) 544-5447 for assistance with replacing.

5.2.6 Switch Locks

Follow these requirements:

1. Equip with a switch lock (item number 170-6438) all switch stands on main tracks, sidings, and other tracks where trains and engines are not required to move at restricted speed.
2. When spiking switches or taking them out of service, properly tag them with a label attached to the shackle of the padlock according to Standard Drawing No. 2225.
3. When using a padlock other than a switch lock ensure shackle is large enough to keep the latch locked during normal train operations.

4. Switch locks come permanently lubricated from the manufacturer and regular maintenance should not be necessary.
5. Take care when trying to thaw frozen switch locks with an open flame. Overheating may cause damage to the internal "O" ring seals, allowing water and dirt to enter the internal mechanism.

5.2.7 Switch Point Locks

In certain areas the Chief Engineer or State/Local laws may require the installation of a secondary switch point lock. If required, install switch point locks on hand throw switches if all of the following conditions are met:

1. Track speed is 30 MPH or greater.
2. The turnout is located within 300 feet of a public road crossing.
3. A facing point move will be made after passing over the crossing.

5.2.8 Switch Point Clamps

Switch Point Clamp – Item number 410-1321
R&B Pad Lock – Item number 170-6103

Switch point clamp to be used only when:

- No switch stand/machine has been installed (i.e. new construction)

  NOTE: In any class of track switch point clamp(s) can be utilized to secure switch point when no switch stand/machine has been installed. Signal rules 3.7 and 3.8 dictate that a train can only move at 25 MPH if a switch circuit controller is installed. If no switch circuit controller then trains must move at restricted speed with a qualified signalman inspecting the switch after every move.

- Maintenance personnel desire to restrict access to a track(s) by making the switch inoperable.

Installation of switch point clamp:

1. Inspect jaws and locking ring of switch point clamp for cracks. If any cracks are found scrap switch point clamp.
2. Line switch for the intended direction.
3. Remove dirt or debris from single crib between the point of switch and #2 throw rod that is to have switch point clamp installed.
4. Turn lock ring counter clockwise until sufficient distance between jaws is achieved to secure switch point to stock rail.
5. Position switch point clamp in crib and attach one jaw to the base of the switch point and the other jaw to the base of the stock rail on the field side.
6. Turn locking ring clockwise with wrench until tight.
7. Inspect point of switch to ensure no gap exists between switch point and stock rail.
8. Install pad lock to secure lock ring to jaw (only one jaw has hole for pad lock).
9. Place out of service tag on switch stand/machine.

Refer to Standard Drawing Nos. 2250 and 2252 for more information.

5.2.9 Switch Point Rollers

Install switch point rollers on all switch points over 16 feet 6 inches long. Install rollers on other points as necessary. Refer to Standard Drawing Nos. 2220 to 2224 or 241309.

Alternative roller designs that reduce turnout throw force are available. In situations where hard to throw switches are an issue Eko-Slide rollers can be utilized. Alternative roller designs are not a replacement for good switch maintenance practices.

When utilizing alternative roller designs such as Schwiag or Eko-Slide, care should be taken to limit the amount of lubrication applied to the plates. These rollers are designed to reduce lubrication requirements and excess lubrication can cause them to gum and bind.

5.2.10 Switch Point Guards

Follow these requirements for switch point guards:

1. Do not use switch point guards on turnouts in main tracks or sidings where track speed is greater than 20 MPH
2. Use a switch point guard of the correct rail size and brace plate design. Refer to Standard Drawings Nos. 1200 to 1215. Follow the manufacturer's installation instructions.
3. When the distance between the gage line of the running rail and the guarding face of the point guard reaches 4-3/16 inches, adjust or replace the wear bar. See Figure 5-I.

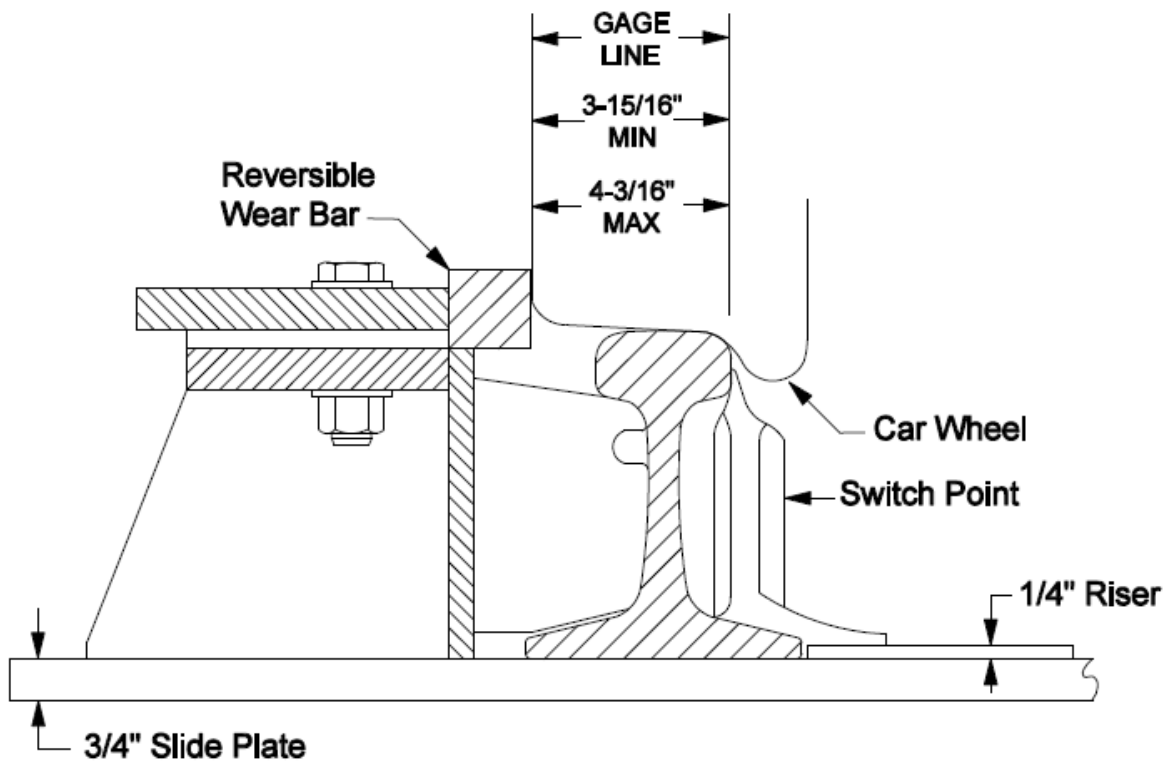

Figure 5-I

4. Do not build up switch point guards by welding in track.

5.3 Switch Rods

Switch rods space switch points the proper distance apart to ensure that the switch points fit tightly against the stock rails.

- Switch rods are identified by rail weight, switch point length, and rod number.
- Adjust vertical type switch rods to the correct overtee dimensions (Figure 5-J) to ensure proper switch point spacing. Refer to Standard Drawing No. 2235 or Common Drawing 241600 for the correct overtee dimensions.
- Semi-Tangential and Clothoid geometry switches have additional rods and may have different Overtee dimensions. Contact Methods and Research for clarification.

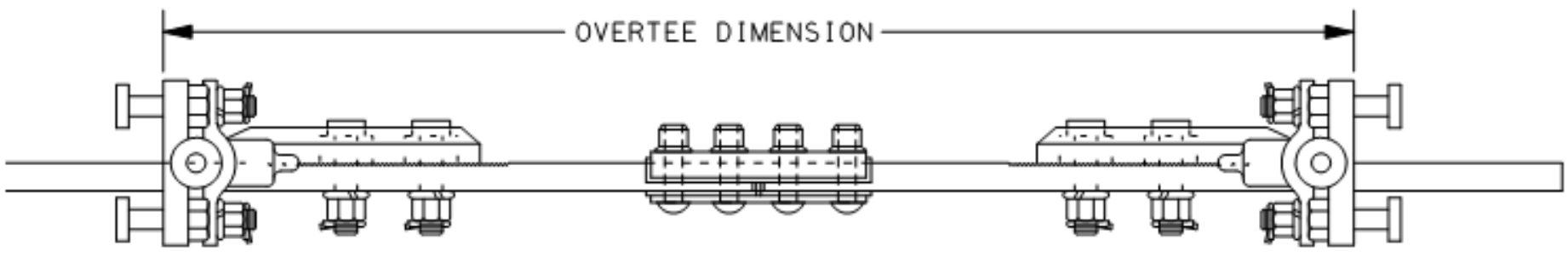

Figure 5-J

5.3.1 Connecting Rods

The connecting rod connects the switch stand to the head rod or No. 1 rod of the switch.

Do not allow the connecting rod to rub against the head block ties. See Standard Drawing No. 2175 for more information on connecting rod specifications.

A. Connecting Rod Length

Determine the length of the connecting rod used by considering clearance restrictions or operating conditions. In general, use the following connecting rod lengths for the specified applications listed in Table 5-D.

Connecting Rod Length	Application
3 feet 4 inches	Between tracks with track centers less than 20 feet.
5 feet	Yard and ladder tracks
6 feet 3/4 inch	Main tracks
13 feet 9 inches	Inside switches on ladder tracks

Table 5-D

Do not use connecting rods shorter than 6 feet with high mast switch stands.

NOTE: Spring switches use a special "spring buffer" assembly instead of a standard connecting rod. See Standard Drawing No. 2200.

B. Connecting Rod Repairs

Do not repair connecting rods by welding.

C. Connecting Rod Installation

Attach the adjustable end of the connecting rod to the crank eye on switch stands with adjustable cranks.

D. Spring Switch Buffer Rod

Follow these guidelines for spring switch buffer rods.

- Keep buffered connecting rods used on spring switches full to the oil level at all times.
- Fill buffered cylinders only with an approved fluid for that unit. When filling and inspecting the unit, do not allow water or foreign matter to get into cylinder.
- When connecting the buffer connect the adjustment end to the switch stand.

5.3.2 Connecting Rod Bolts

Insert connecting rod bolts (of the proper dimension) with the head down and secured with a nut and cotter pin on top. This is done so the bolt can be easily inspected visually.

5.3.3 Switch Rod Use

Follow these requirements for using switch rods:

1. Use the correct number of switch rods for a switch, depending on the length of the switch point.
2. Use only insulated type switch rods where track circuits exist.
3. Allow the switch rod to pivot as the switch is thrown.
   - On vertical type switch rods, periodically lubricate the grease zerk on the MJ clips.
   - On horizontal type switch rods, do not over tighten the bolts that secure the rod to the transit clips. This connection must be allowed to pivot for proper operation of the switch.

5.4 Switch Points

Follow these requirements:

1. Ensure that switch points are the same rail size as the stock rails they are mated to.

   EXCEPTION: ZU-160 asymmetrical section switch points are universal. Special switch plating is used to adjust for proper fit with stock rail. These points were used in all #30 turnouts and special application #20/24′s on wood ties. They are a "smaller" rail section and use special plates to raise them up and match the stock rail. For assistance with these points contact UPRR Methods and Research.

2. Measure switch point length from the tip of the switch point to the heel block joint assembly of the switch.
3. On extended length type switch points, measure switch point length from the tip of the point to the center of the floating heel block.

   Extended switch points are often characterized as heel block length and then overall extended length. Example: 16'6" point extended to 39' can be used in 16'6" switch point applications and is able to be welded at its overall length of 39'.

5.4.1 Switch Point Use

Follow these guidelines for using switch points:

Best Practice: Paint switch point tips white to show wheel wear and to aid in switch point inspection.

1. Use Standard (knifepoint) design switch points with standard rail section stock rails. See Figure 5-K. Knifepoints should be upgraded to Samson design when replaced and should not be utilized on mainlines.

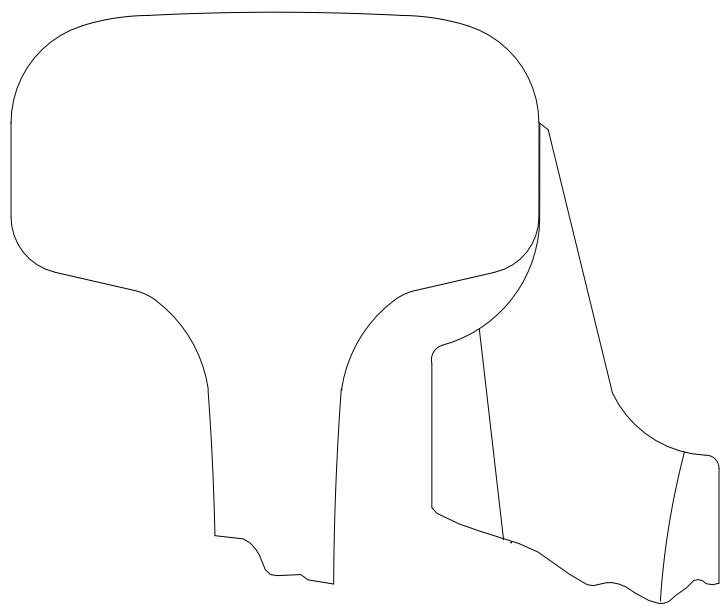

Standard (Knifepoint) switch point and stock rail

Figure 5-K

Use Samson design switch points only with Samson type stock rails. See Figure 5-L. Conventional bolted heel block Samson points must be upgraded to floating heel block style extended Samson points when replaced in mainline applications Class 3 or greater. Refer to 5.4.2 Heel Blocks

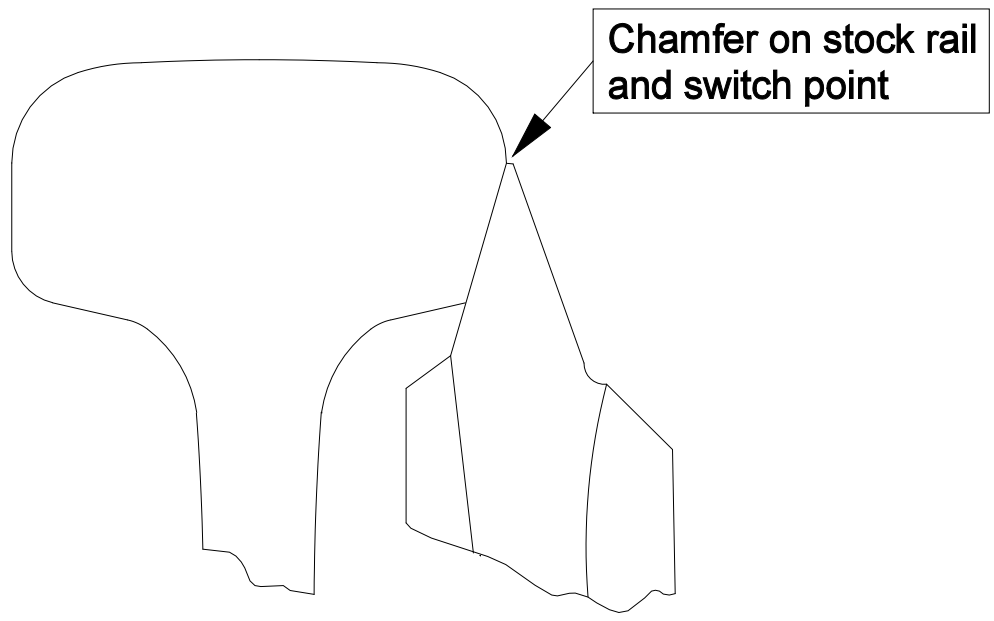

Samson design switch point and stock rail

Figure 5-L

2. Crop extended length switch points and stock rails during replacement operations to facilitate field welding and future replacements. Refer to UPRR Track Standards for turnout cropping locations.
3. Prior to 2012 UPRR utilized manganese tip switch points on the diverging side of all turnouts. Use only thin head bolts to attach manganese tips to the point.
4. Switch Point Tip Inspection Procedure:
   a. Inspect the tip at 2” (inches) back from the front of the tip using the saddle gauge shown in Figure 5-M. The gage will be marked for the particular type of switch point (i.e. 136RE/141AB, 133RE, 39’-0”, etc.). One side of the gauge is for 133RE, and the other is for 136RE/141AB. Item number 410-2003

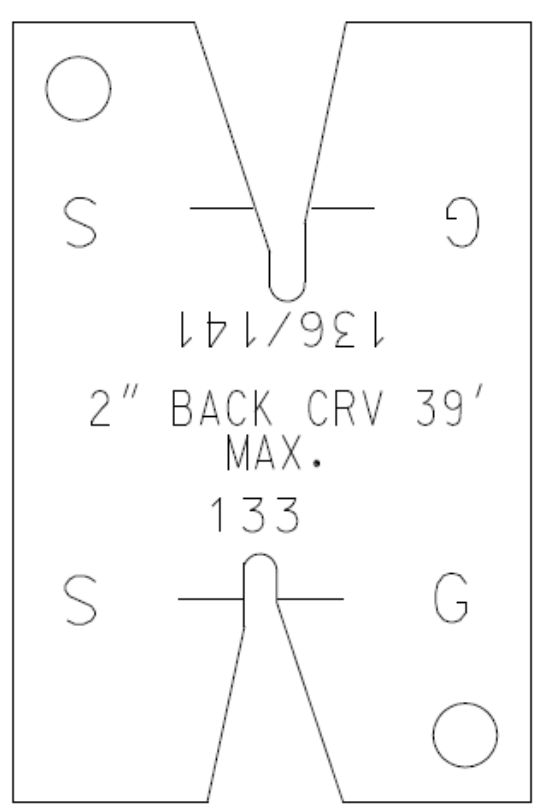

Figure 5-M

   b. Set the gauge over the top of the switch point tip at 2” behind the very front of the tip. Note the gauge is also labeled “G” for gage side and “S” for stock side. With the gauge properly positioned, the top surface of the tip should be in alignment with the scribe-line on the gauge. If the tip is too wide, the top surface of the tip will be below the scribe-line, and the tip must be ground. If the tip fits the gauge, then no rework should be required on that particular switch point tip. If the tip does not pass gauge inspection, then follow the rework procedure described in the following section.

Rework Procedure:

   c. If the switch point tip is too wide, then it must be ground on the gage side face. It is important to maintain the same face angle as well as maintaining a smooth transition. Therefore, equal amounts of material must be removed from the entire gage face, and it must be blended back to the end of the tip. Periodically re-check the gage and the straightness using a 36” straightedge. Try and keep bumps and holes to a minimum. The end result should be a tip that passes the saddle gage test with no bumps or holes along the gage face. Note that the heel of the tip (where the switch point and tip meet up) should not have any material removed and should be the end point of the blend. See Figure 5-N.
   d. If the tip is in track, check the transition to the point tip by setting a 36” straightedge against the stock rail gage line and moving it toward the point of switch. The straightedge should pass beyond the point without contacting the tip of the point.

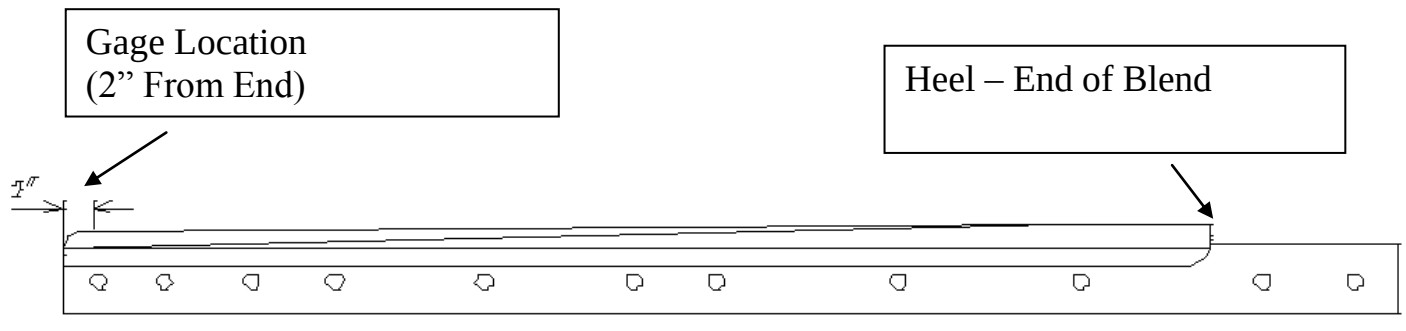

Figure 5-N

5. On turnouts using curved point geometry, place the curved point on the diverging side of the turnout.
6. Use standard 1/2-inch reinforced switch points on hand-throw and power switches. Use heavy-duty 1-1/4-inch reinforced switch points on spring switches. See Figure 5-O.

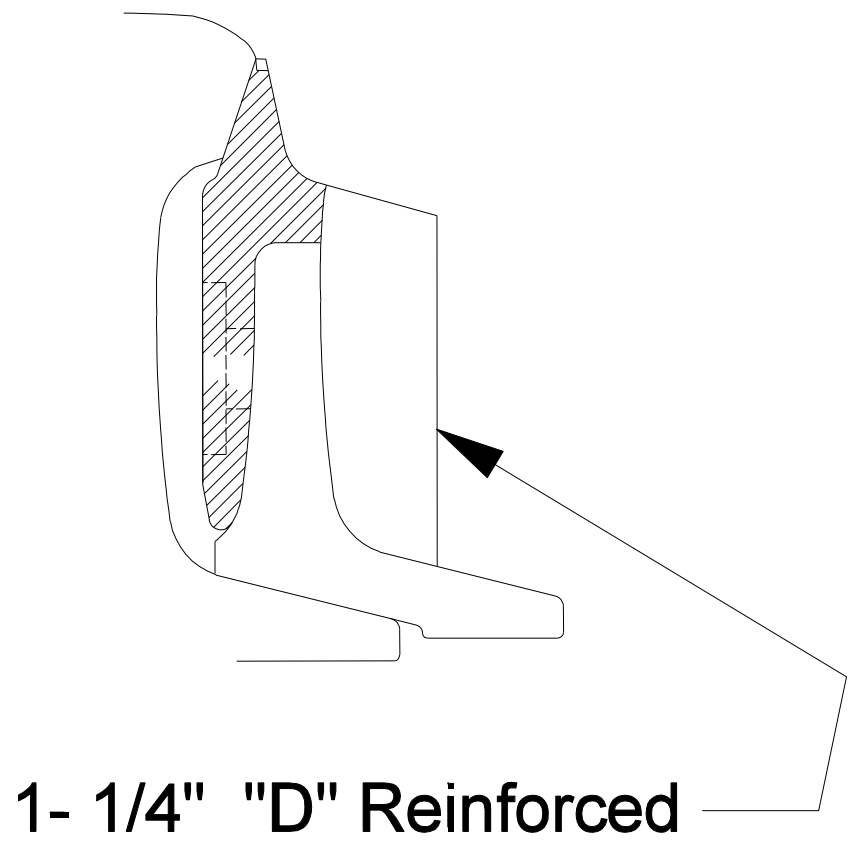

Figure 5-O

7. Change out worn switch points and stock rails together. If changing out a damaged switch point without installing a new stock rail, grind off any overflow on the stock rail and excessive switch point height to prevent tip breakage. See Figure 5-P.

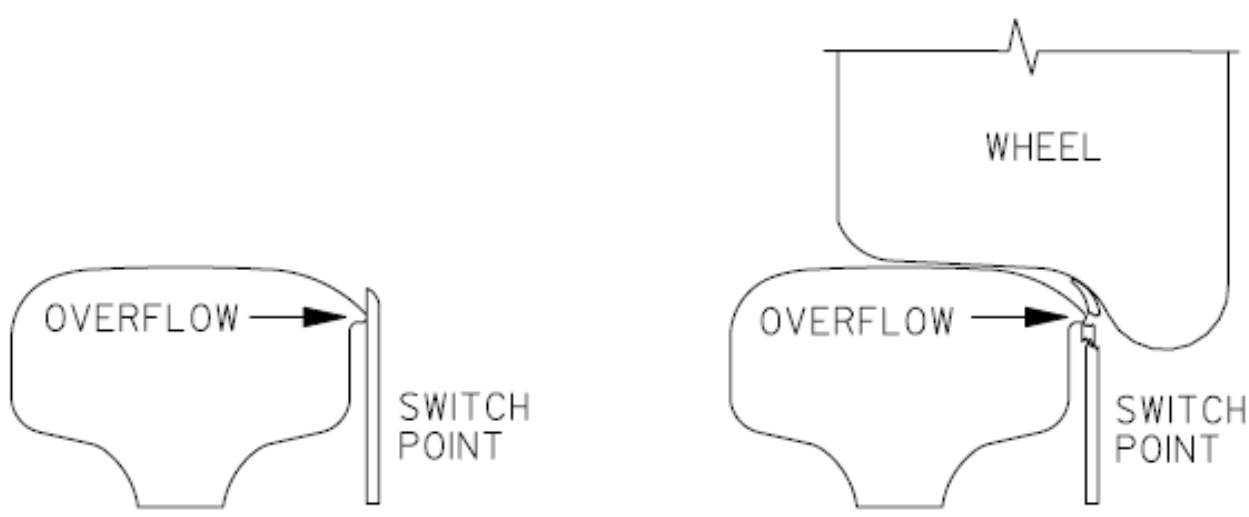

Figure 5-P

5.4.2 Switch Point Maintenance

Repair switch points as follows:

1. Grind off rail flow from the switch point that prevents it from bearing fully against the head of the stock rail. See Figure 5-Q.

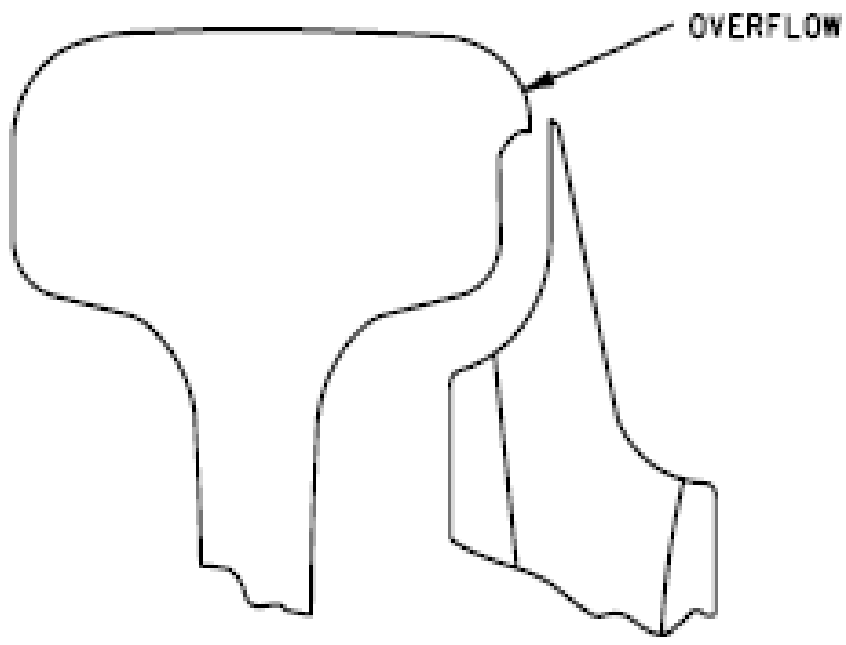

Figure 5-Q

2. Grind the flowed metal from the stock rail from 4 inches ahead of the switch point toward the heel to a point where the switch point no longer contacts the stock rail. Grind the edge of the stock rail to a 5/8-inch radius.

3. Do not replace stock rail only. Stock rail and switch point must be changed as a pair. (See Figure 5-V).
4. Do not use switch points in main tracks that have been repaired or built up by welding.

> **EXCEPTION: Chipped or battered joints at the heel of the switch points may be built up in main track under the same procedure specified for rail end welding.**

5. To repair carbon and manganese tip switch points correctly, refer to Form 7913, "Instructions Governing the Inspection, Welding, Grinding and Heat Treating of Track Components."

5.4.3 Heel Blocks

Heel blocks act as a hinge for the switch point. The following are the different types of heel blocks, See Figure 5-R for examples:

1. **Conventional bolted heel blocks** have a joint held together by a cast block and bolts as shown in Figure 5-S. These conventional bolted heel blocks are associated with short points.
2. **Floating heel blocks** do not have this joint and use a small block and two bolts. These floating heel blocks are associated with extended switch points.

Maintain heel blocks properly to ensure that the switch can be operated without using excessive force.

> **NOTE: When conventional bolted heel blocks require replacement they must be replaced with floating heel block style extended switch points in mainline and siding applications Class 3 or greater when one or more of the following criteria are met:**
>
> - **Switch points displaying signs of running rail for mainline or siding track**
> - **Switch points are part of a mainline crossover**
> - **Switch points are in control points with diverging mainlines**
> - **Switch points are on mainline turnouts to a siding regularly used to meet and pass trains**

Follow these requirements:

1. Keep spikes or welded stops from preventing the hinging movement of the switch point in the heel area.
2. Lubricate heel joint assemblies with switch plate oil and do not over tighten them so as to bind the switch point.
3. Use good ties to support the heel and solidly tamp the heel joints.
4. Use the appropriate joint bars as follows:
   - For floating heel joint assemblies for 16-foot 6-inch and 24-foot switch points, use 5-hole angle bars.
   - For 39-foot switch points, use 6-hole angle bars.
   - For extended switch points, no joint bar is required at the heel location.
   - For continuous filler block assemblies, use the bent 5-hole bar designed for that purpose. See Figure 5-S.

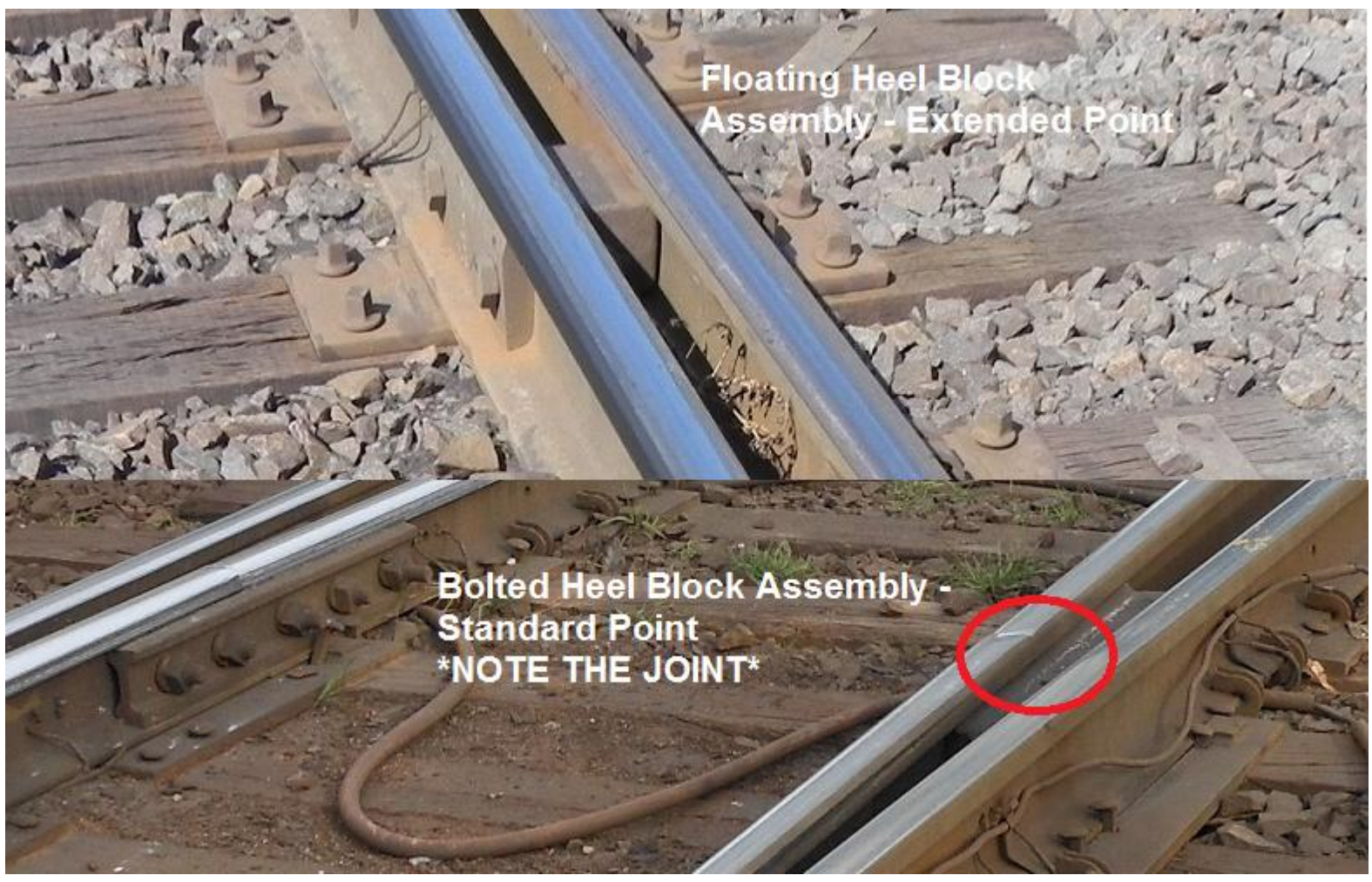

Figure 5-R

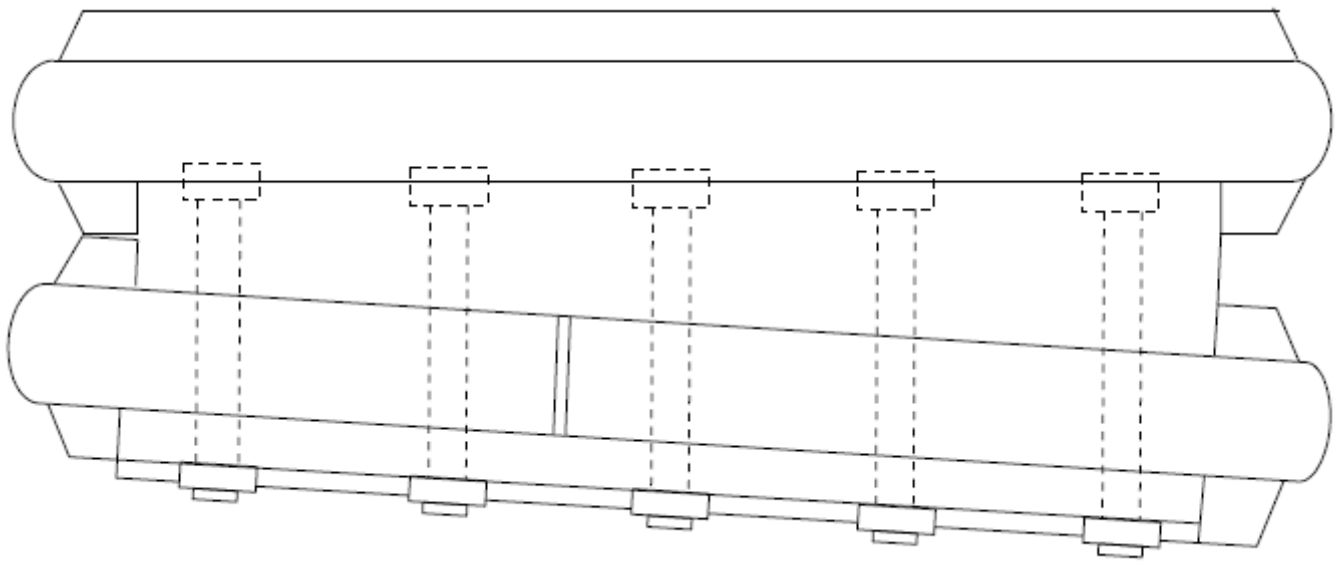

Figure 5-S

5.4.4 Stock Rails

Stock rails must be the same rail size as the switch points they are mated to.

EXCEPTION: ZU-160 asymmetrical section switch points are universal. Special switch plating is used to adjust for proper fit with stock rail on #30 turnouts only.

5.4.5 Stock Rail Replacement

Follow these requirements to replace stock rails:

1. To prevent wheels from striking the tip of the point, replace stock rails that are curve worn more than 3/16 inch ahead of the switch point.
2. Do not place a new stock rail against a worn switch point.
   - The switch point should rise a minimum of 3/16 inch above the stock rail where the wheel transfers from the switch point to the stock rail. See Figure 5-T.

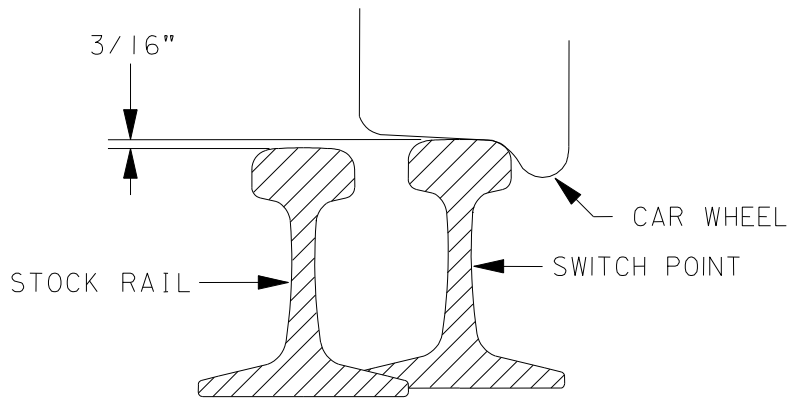

Figure 5-T

   - The outer edge of the wheel tread must not contact the gauge side of the stock rail. See Figure 5-U. When correcting this defect ensure that the switch plates are not worn. Replace if necessary.

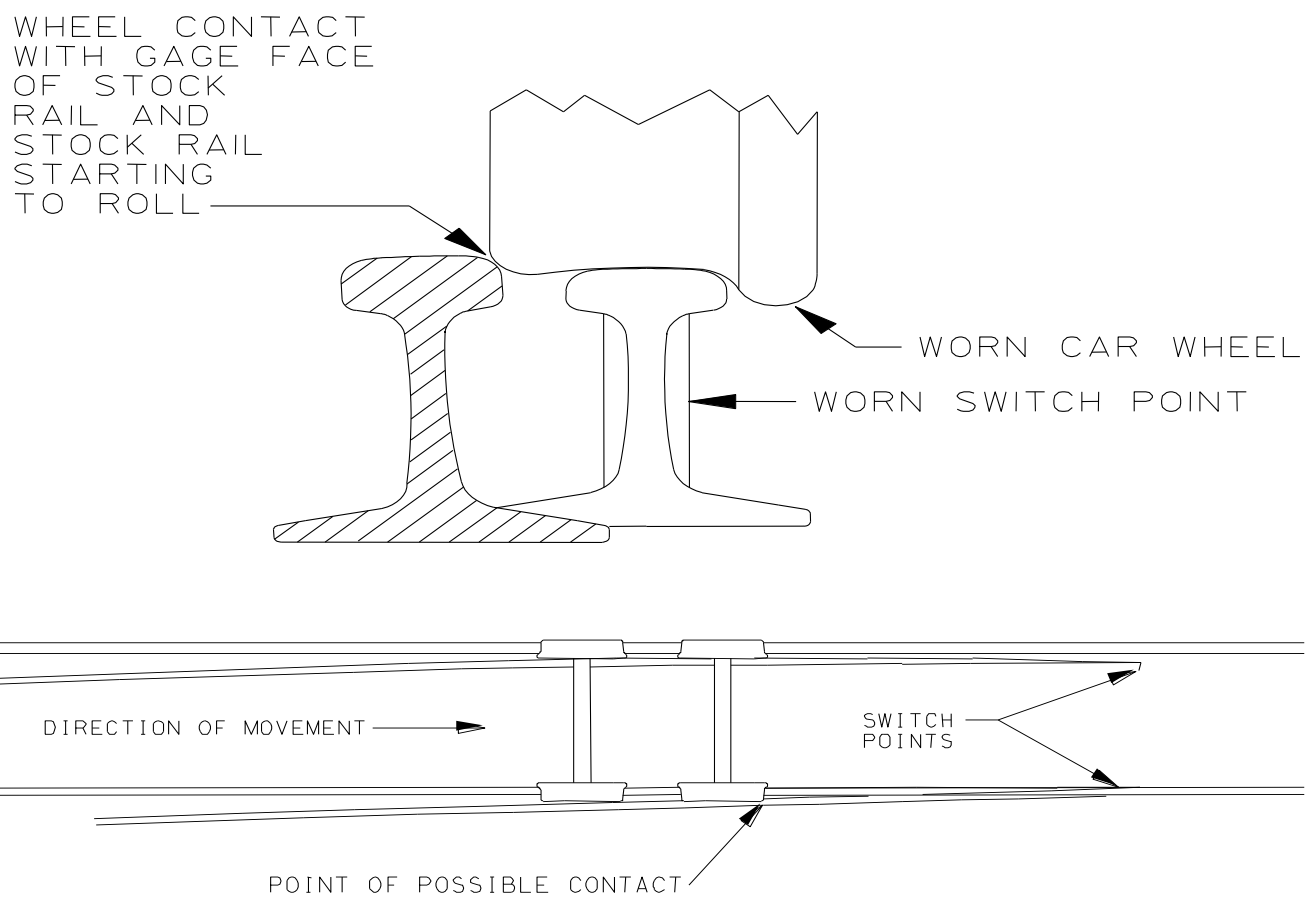

Figure 5-U

3. Keep adjustable brace plates tight to keep the stock rail securely fastened in the riser plates, but do not over tighten them to the point that the stock rail is canted. The stock rail should not move when the switch point is brought up tight against it.

5.4.6 Stock Rail Use

Follow these requirements for using stock rails:

1. Stock rails will be made using head-hardened rail.
2. Use Samson (undercut) stock rails only with Samson design switch points. See Figure 5-V.
3. For 115-pound and heavier rail, use bent stock rails that were pre-bent at the manufacturer.
4. Depending on switch design universal stock rails may be utilized. Universal stock rails can be utilized for many different straight stock applications and can cut down on inventory requirements and cost.

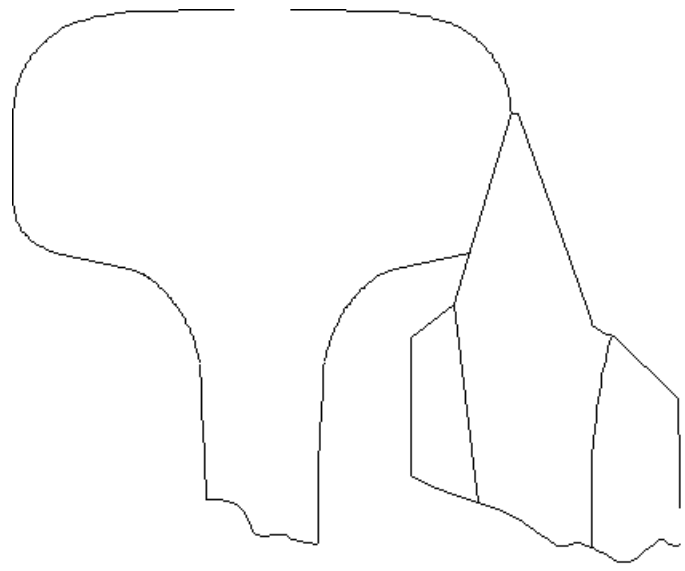

Samson design switch point and stock rail

Figure 5-V

5.4.7 Plating in Turnouts

The different plating types are as follows:

- Switch plates refer to plating from the point of the switch through the heel of the switch.
- Turnout plating refers to the special plating behind the heel of the switch to the toe of the frog.
- Frog plating refers to the special plates used under the frog.
- Guard rail plating refers to the special plates used under the guard rail.
- Special trackwork plates are stamped with the plate number and rail size.

Follow these plating requirements:

1. Fasten plating with round holes to ties with screw spikes. Use the square cut spike holes in these plates for gauging purposes only. You may use cut spikes at the base of the rail when no elastic fastener is present.
   - Fasten plates to ties using two screw spikes per plate end.
   - Use the outer two holes unless one of the holes is within 1 inch of the end of the tie. In this case, you may use the middle hole. See Figure 5-W.

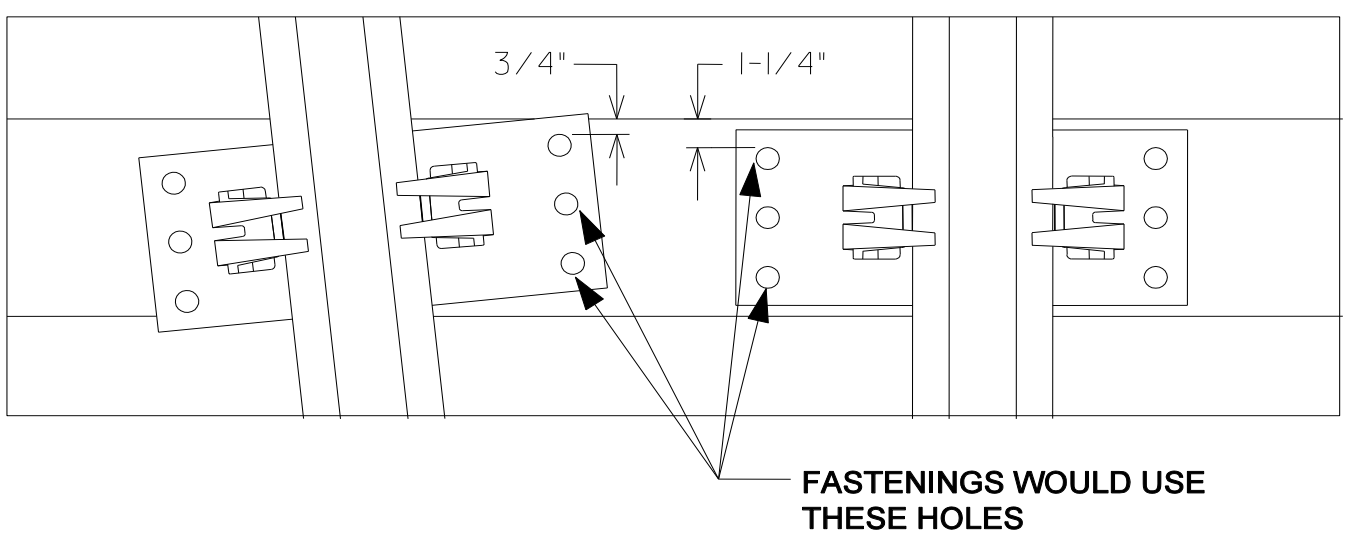

Figure 5-W

2. Securely seat rail in switch plates and keep rail braces tight. Do not over tighten.

5.5 Frogs

Frogs allow wheels to pass over one rail and onto another.

1. Frogs are designated by frog number according to their angle. Use frogs with turnouts of the same number. Refer to Standard Drawing No. 0080 for frog applications.
2. Frogs are furnished in extended lengths to provide clearance for field welding in track and replacement in the field without having to add additional rail. This type of frog may need to be cropped before installation in the field to take advantage of its versatility. Refer to the appropriate turnout Standard Drawing for cropping locations.
3. Tighten per 5.5.6.

5.5.1 Identification of Frogs by Number

The rail weight and frog size are stamped on a tag attached to the heel of the frog or cast into the top of the filler block. If these markings are not clearly visible, determine the frog number as follows:

1. With a tape measure, mark a 3-inch width across the top of the frog.
2. Mark a 4-inch width across the top of the frog.
3. Measure between marks. The number of inches measured equals the frog number. See Figure 5-X.

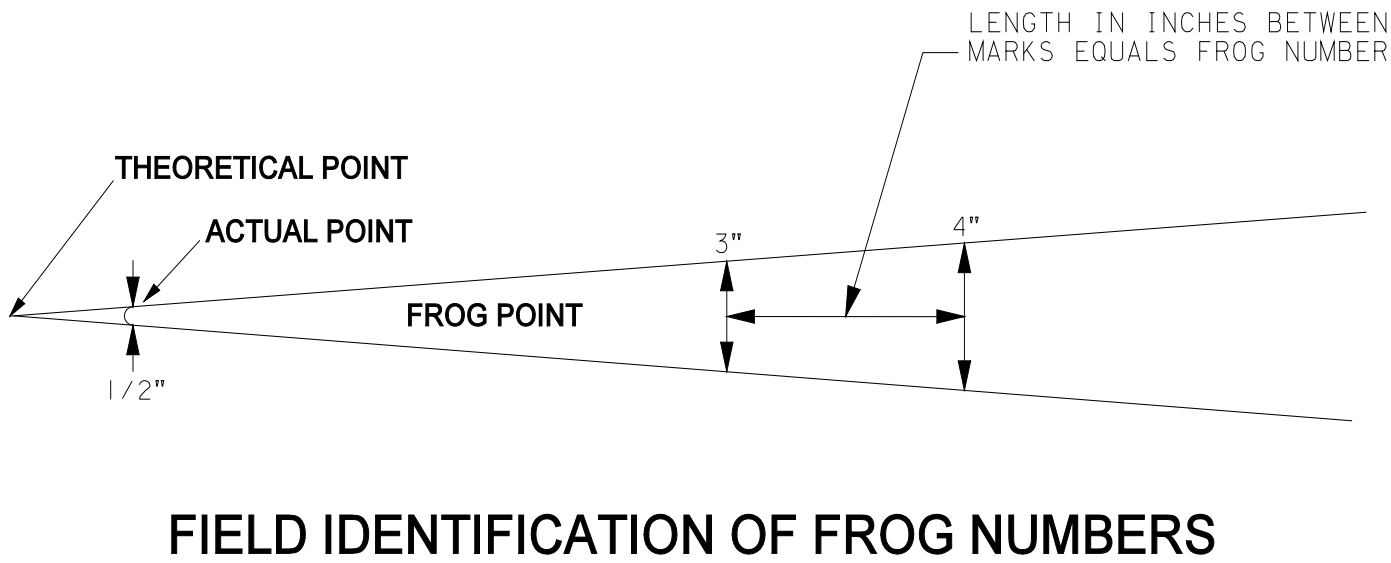

Figure 5-X

5.5.2 Frog Types

Subsections A through F describe typical frog types.

A. Railbound Manganese Frog (RBM)

The RBM frog has a cast manganese body insert for the point section of the frog. See Figure 5-Y. Refer to Standard Drawing No. 3005. RBM frogs can either be Heavy or Standard Point, see section 5.5.7 for additional details.

NOTE: In mid-2000's UPRR and the BNSF converted to conformal top RBM frogs. Conformal top frogs feature a 1:20 slope on the wing portion of the castings where as a standard RBM is flat. For help identifying conformal top frogs see Standard Drawing No. 151900 and Section 5.5.4 Frog Wear Conformal Frogs (Heavy Point RBM's).

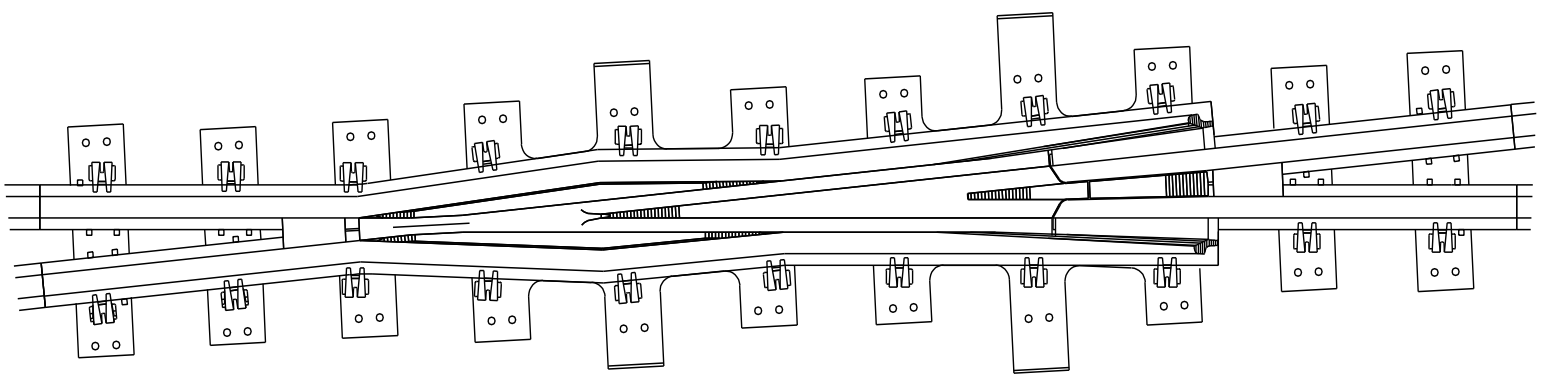

Figure 5-Y

B. Rigid Bolted Frog

The rigid bolted frog is similar in design to the RBM frog, except the point section is constructed from rail instead of manganese. Install a frog with the short point on the turnout side if it is available. See Figure 5-Z.

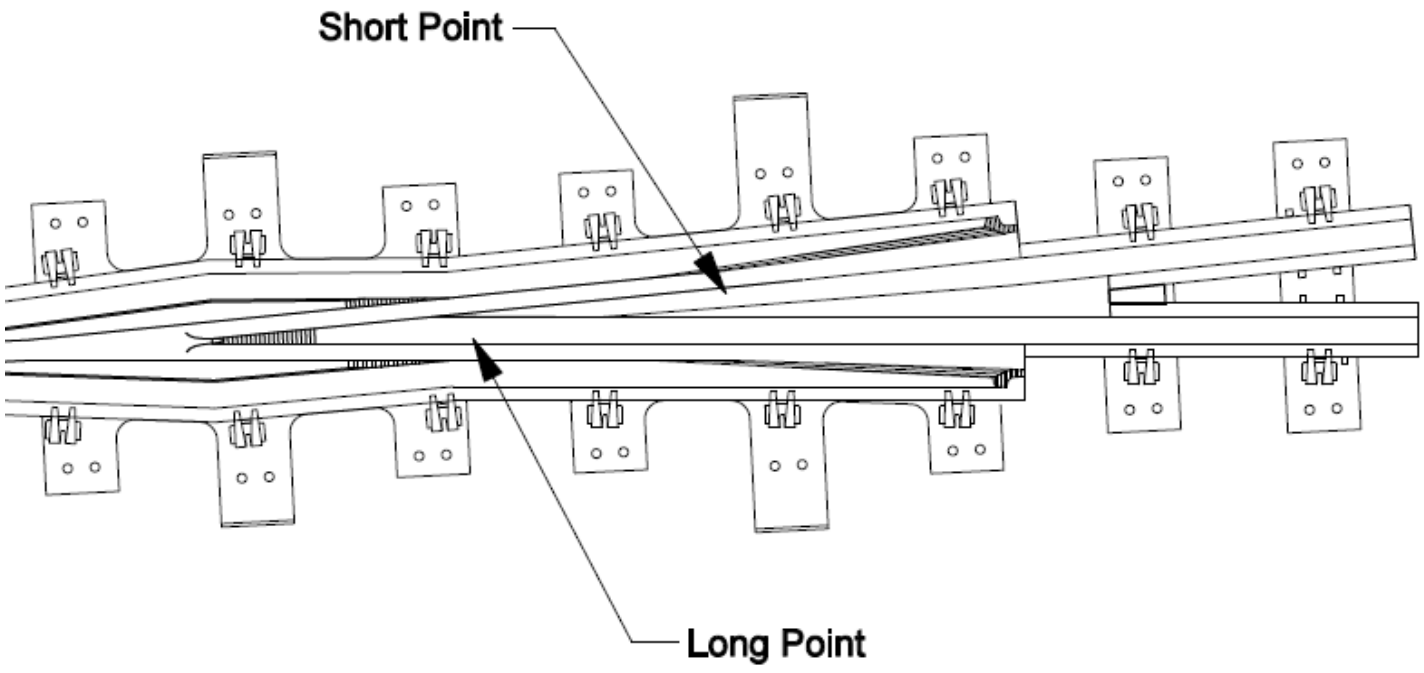

Figure 5-Z

C. Spring Frog

The spring frog has a movable wing rail that is normally held closed against the body of the frog except when pushed open by a diverging movement. See Figure 5-AA. Refer to Standard Drawing No. 3000. Use this frog in main track applications where the diverging traffic is less than 30 percent of the main track traffic.

Follow these requirements for spring frogs:

1. To determine the correct "hand" for spring frogs, stand at the toe of the frog and face the frog point.

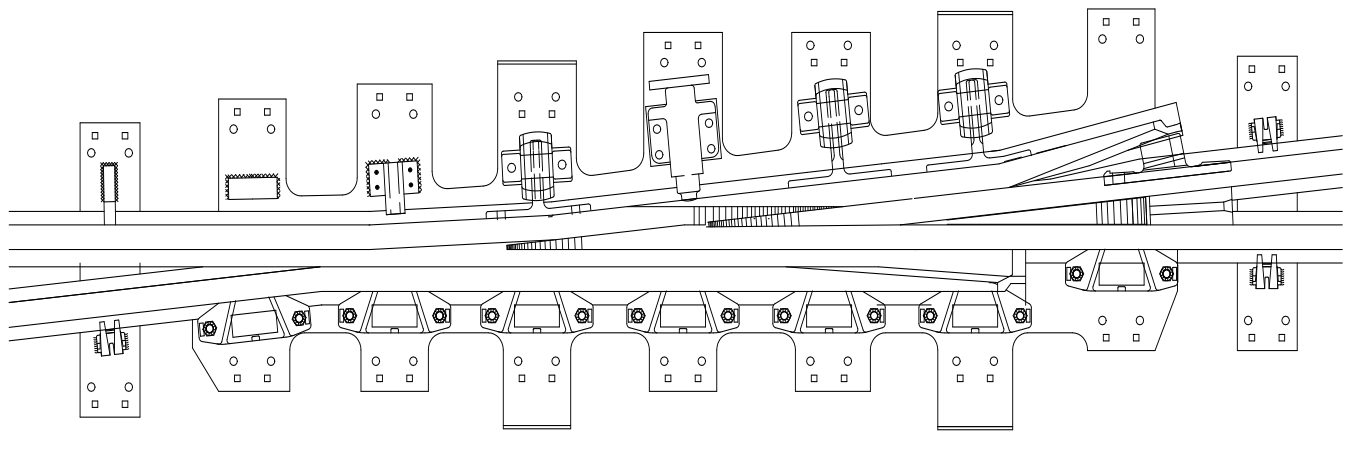

Figure 5-AA

- If the spring wing is on your left, it is a left-hand frog.
- If the spring wing is on your right, it is a right-hand frog.

2. When installing a spring frog without a toe block, align the match marks on the spring wing with those on the frog body. This ensures that the hold downs and horns are centered and the designed 3/8-inch opening is between the frog point and wing rail.
3. Ensure that the ties under the toe of the frog are in good condition and are solidly tamped.
4. Use wing rail retarders with frogs on dual control and spring-operated switches.
5. A WSM – Welded Spring Manganese frog features three welds between the casting and the rail for a "boltless connection". These frogs are characterized by 2 stainless steel welds at the toe and one at the heel of the casting and no bolted joints.
6. All rail spring frogs do not have a manganese casting and are generally No. 11 and smaller.
7. Spring frogs can be Heavy Point frogs. See section 5.5.7 for further details.

D. Solid Manganese Self-Guarded Frog (SMSG)

The SMSG frog has a body cast in one piece from manganese steel. A raised guard cast into the body protects the frog point from passing wheels, making the installation of a guard rail on the opposite rail unnecessary. See Figure 5-BB. Refer to Standard Drawing No. 3005.

Use this frog in yard and industry applications where the track speed does not exceed 20 mph.

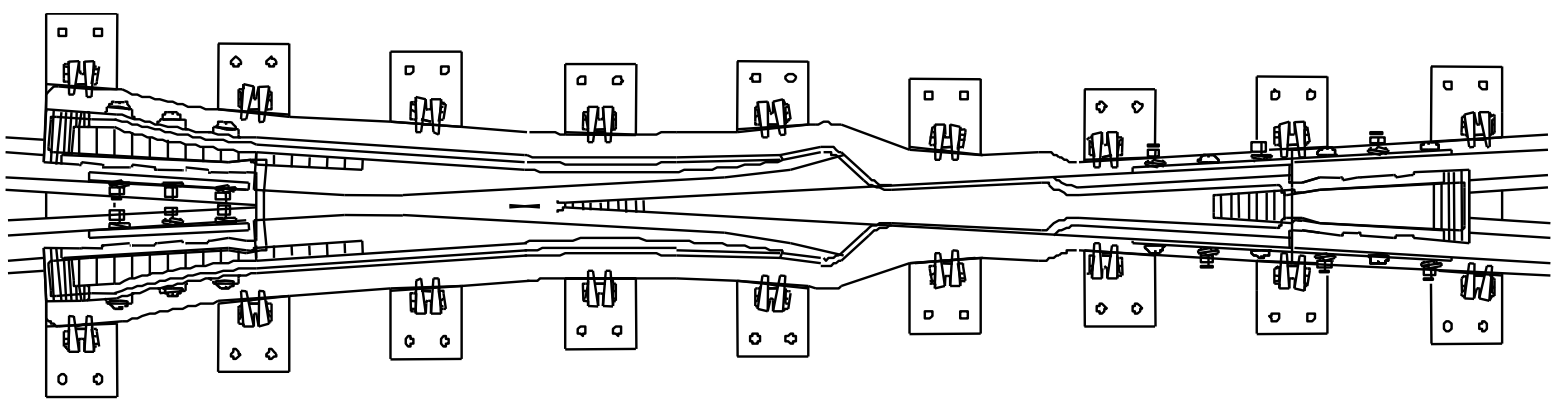

Figure 5-BB

Follow these guidelines:

1. If building the frog point under traffic, build the guarding face before the frog point.
2. Install guard rails as an option in cases where additional guarding may be required, such as curved switches.

E. Movable Point Frog (MPF)

The MPF is equipped with a point that is movable in the same manner as the switch points. See Figure 5-CC. Refer to Standard Drawing No. 3015. This frog is used in heavy tonnage, high-speed main track where the traffic on the straight and diverging side of the turnout is comparable.

Follow these requirements:

Do not build up the frog point by welding.

1. When performing maintenance on the frog, do not jack on asymmetrical wing rails.
2. Ensure good surface for proper frog operation.
3. Lubricate the base plate with a switch plate lubricant over the area where the frog point travels.

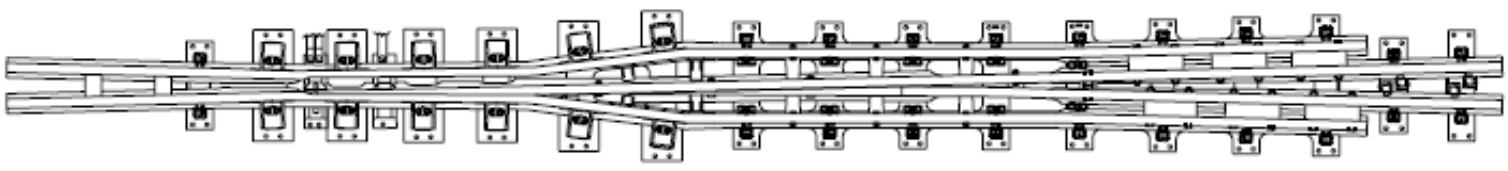

Figure 5-CC

F. Jump Frog

The jump frog features a continuous mainline rail and a flange bearing run on the turnout side. This frog can be utilized in situations where traffic through the diverging route is minimal such as maintenance of way tracks or small industry tracks. Speed is limited on the turnout run to 10 MPH by the FRA.

Follow these requirements:

1. When installing a Jump Frog the mainline guard rail can be removed. Gage plates are required between the frog and the mainline running rail. Do not allow gage through the frog to exceed 57 ¼". For gage plate details see Standard Drawing Nos. 3042 and 3043.
2. The turnout side guard rail must be installed. Guard rail must be upgraded to the latest boltless adjustable style and shimmed upwards at the center per Standard Drawing Nos. 3042 and 3043 to prevent stiff truck derailments.

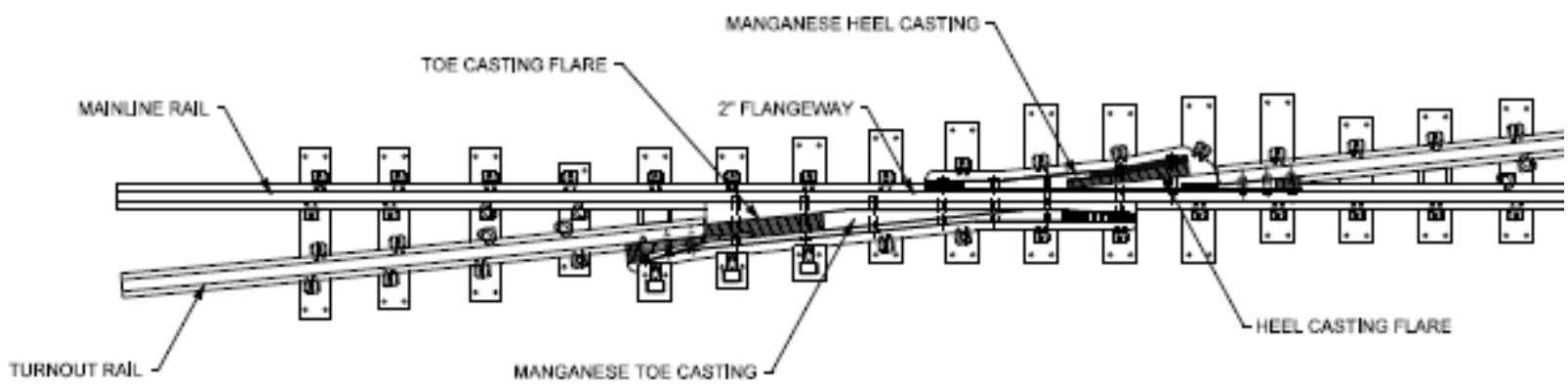

Figure 5-DD

G. Crossing Frog (Diamond)

Crossing diamonds allow two tracks to cross over one another at grade. They may be constructed from all rail or with manganese inserts at the locations where the rails cross over each other.

When replacing crossing diamonds the order of preference is as follows:

1. One Way Low Speed
2. High Angle Reversible
3. Low Angle Reversible

NOTE: When a new crossing frog is installed, the old crossing should be retained near the location of the crossing but a sufficient distance away so that it would not be damaged in a derailment on the railroad crossing. If the crossing in track is damaged in a derailment or otherwise fails, the old crossing can be reinstalled to allow reopening of the line while repairs are being made to the damaged crossing or until a new crossing can be purchased.

NOTE: Lead times on many critical crossing diamond components and replacement crossings can be long. It is recommended that a minimum of ONE SPARE MANGANESE CASTING SET be kept on hand at all times in case of failure. For assistance with ordering spare crossing diamond parts or new crossing diamonds contact the Sr Manager of Engineering Methods and Research. Lead time on new crossings is generally 6 months and will be shipped with a minimum of one full spare set of castings.

NOTE: To access Crossing diamond drawings visit the UPRR Engineering Portal – Procedures and Standards – Track Standard Drawing Index – Crossing Diamonds and pull by location. If drawings are not found contact Engineering Methods and Research for Assistance with locating.

There are three distinctly different designs of rail crossings that include:

- Low Angle Reversible – crossing central angle is 16-40 degrees, refer to Figure 5-EE.

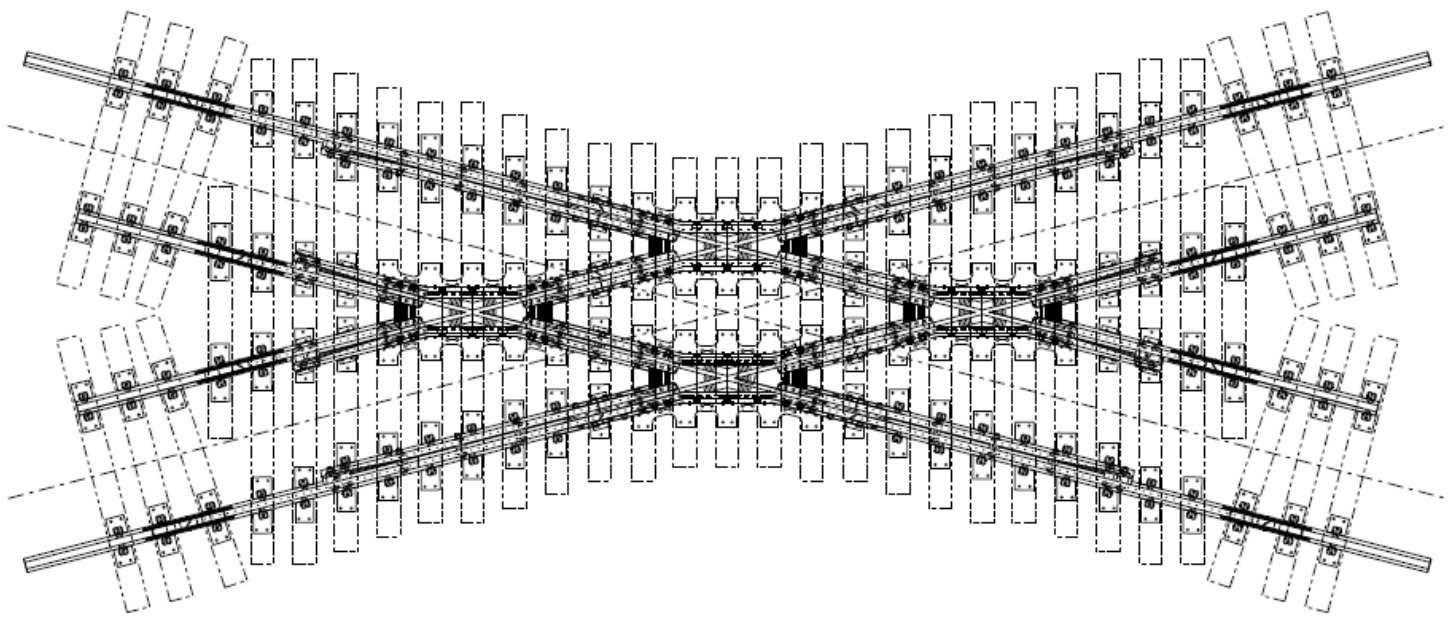

Figure 5-EE

- Straight Rail Reversible – crossing central angle is 41-90 degrees, refer to Figure 5-FF.

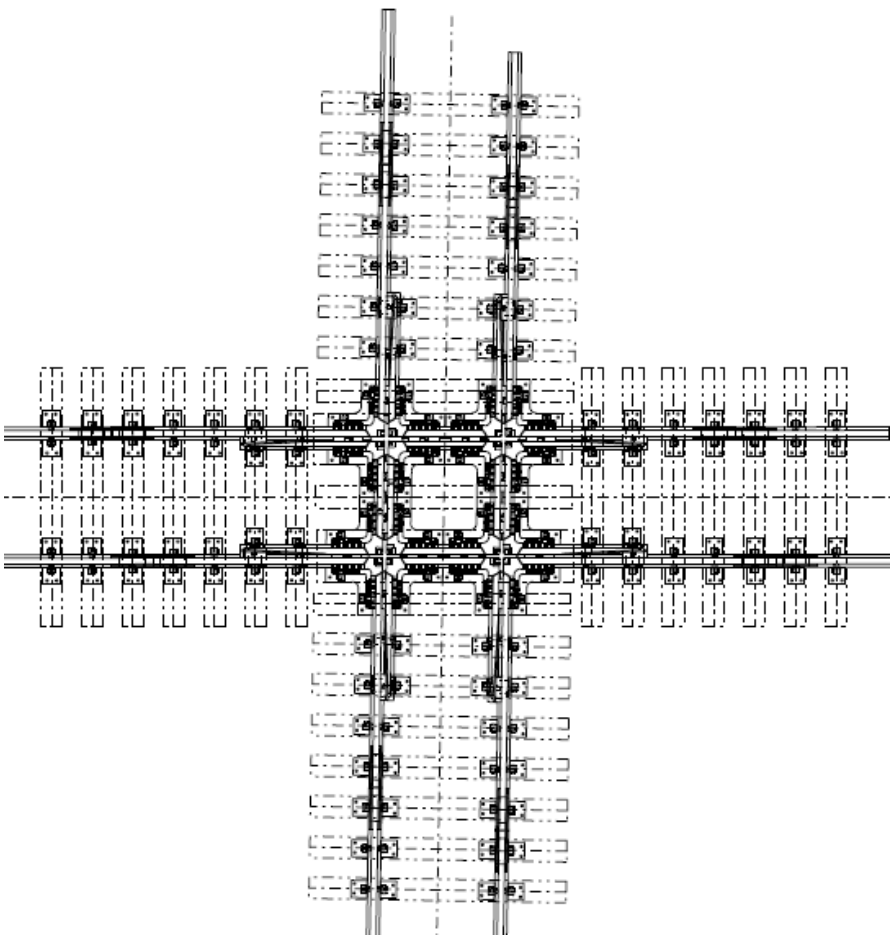

Figure 5-FF

- OWLS (One Way Low Speed) – crossing central angle is 35-90 degrees, refer to Figure 5-GG.
  - OWLS crossings utilize a flange bearing lift on one track that is limited to 10MPH. The mainline run is approved for speeds up to 79MPH.

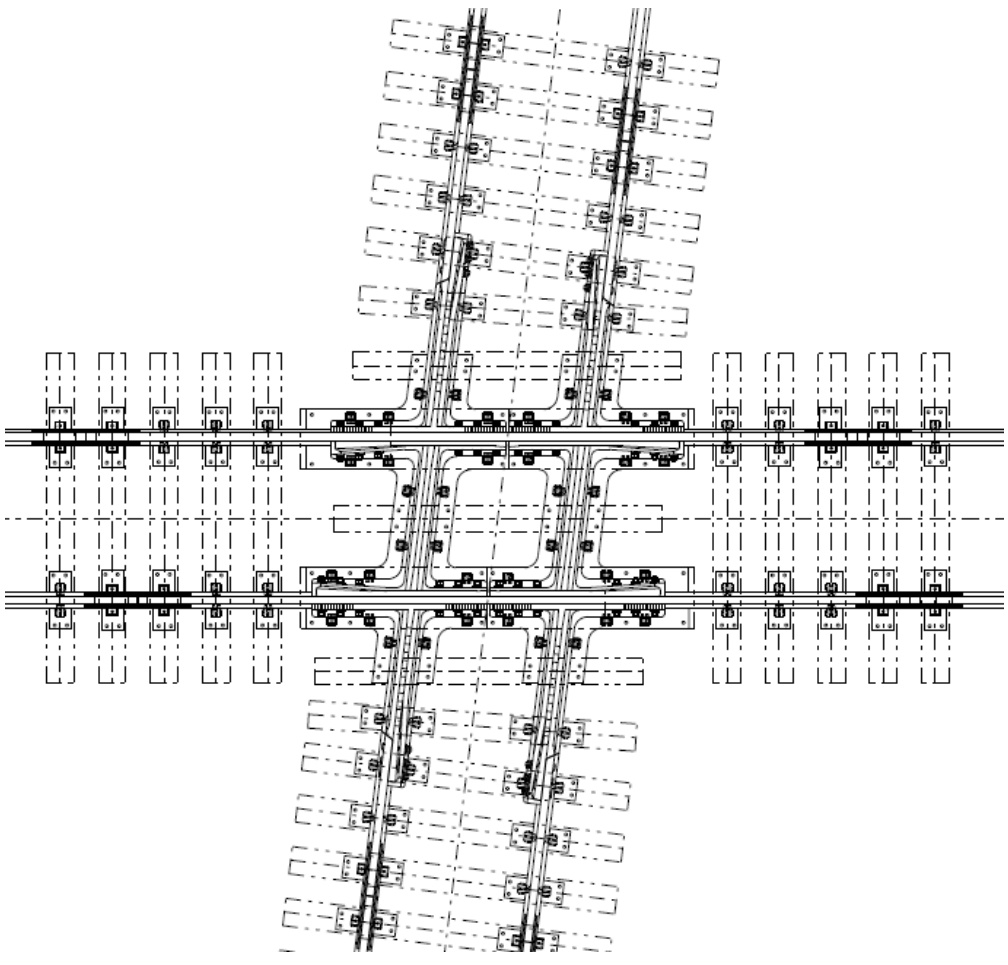

Figure 5-GG

- FBF (Flange Bearing Frog) or Full-Flange Bearing Crossings – crossing central angle is 20-90 degrees, refer to Figure 5-GG-2.
  - FBF crossings utilize a flange bearing lift ramp on both tracks that can be designed for up to 60 MPH.
  - FBF crossings have long signal "deadzones" that require additional signal work to be performed before installation.

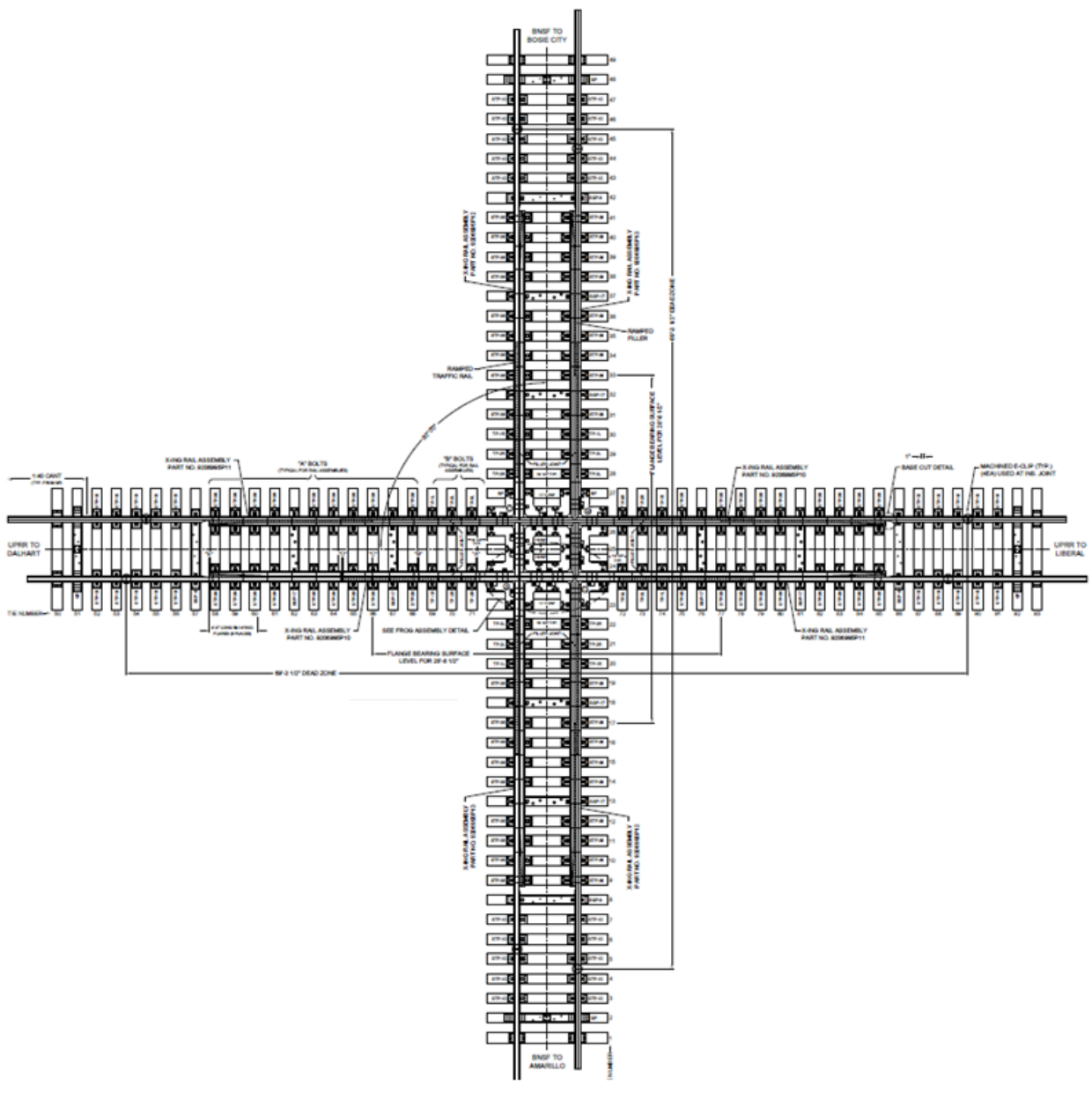

Figure 5-GG-2

Figure 5-HH contains common nomenclature for all three types of rail crossing designs.

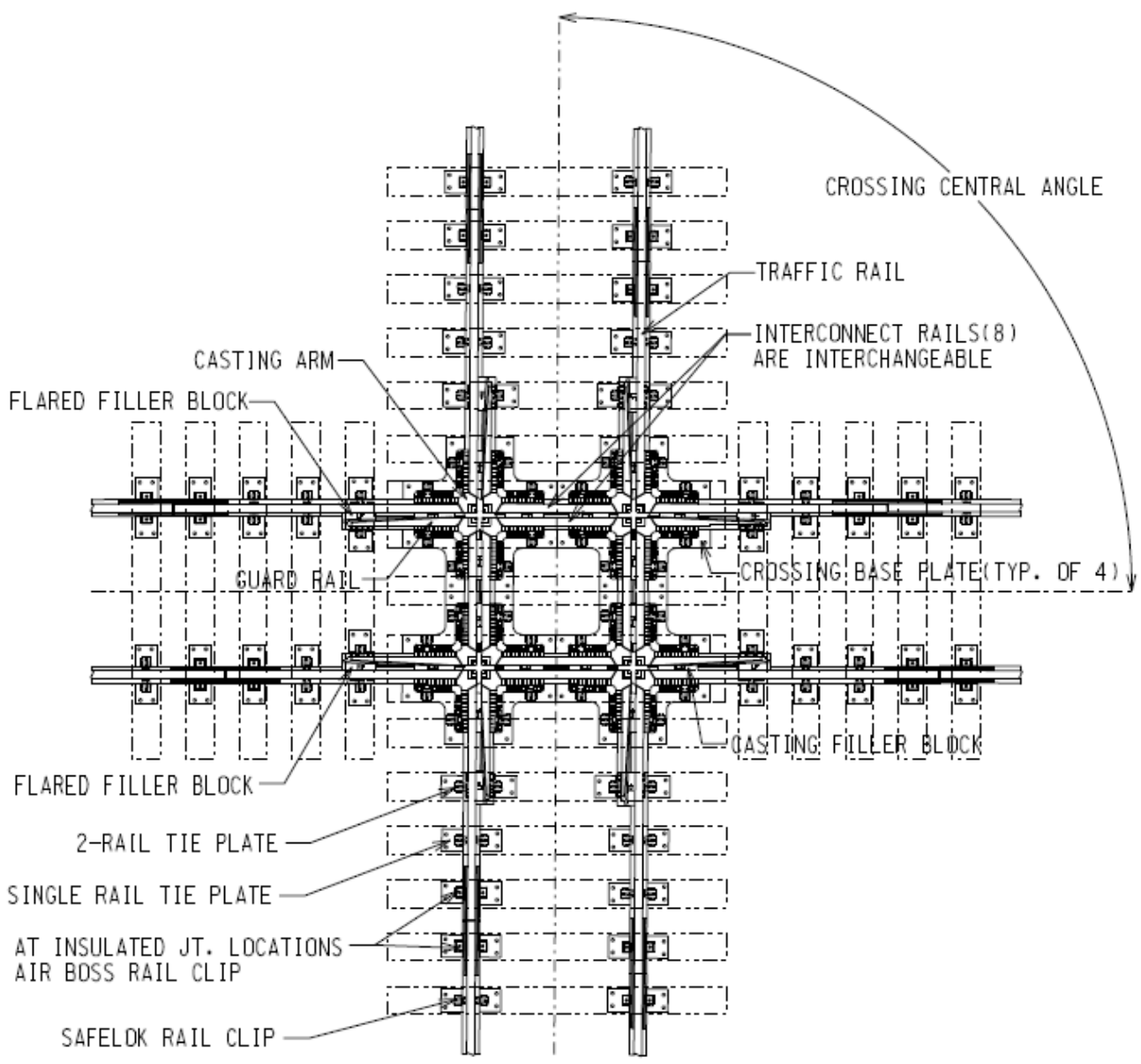

Figure 5-HH

5.5.3 Frog Wear Non-Conformal Frogs (RBM, SMSG, Jump and Diamonds)

Check frog wear on Non-Conformal Frogs as follows:

1. Do not allow the frog to wear such that the flangeway is less than 1-9/16 inch deep or less than 1-1/2 inch wide, as shown and measured in Figure 5-II.

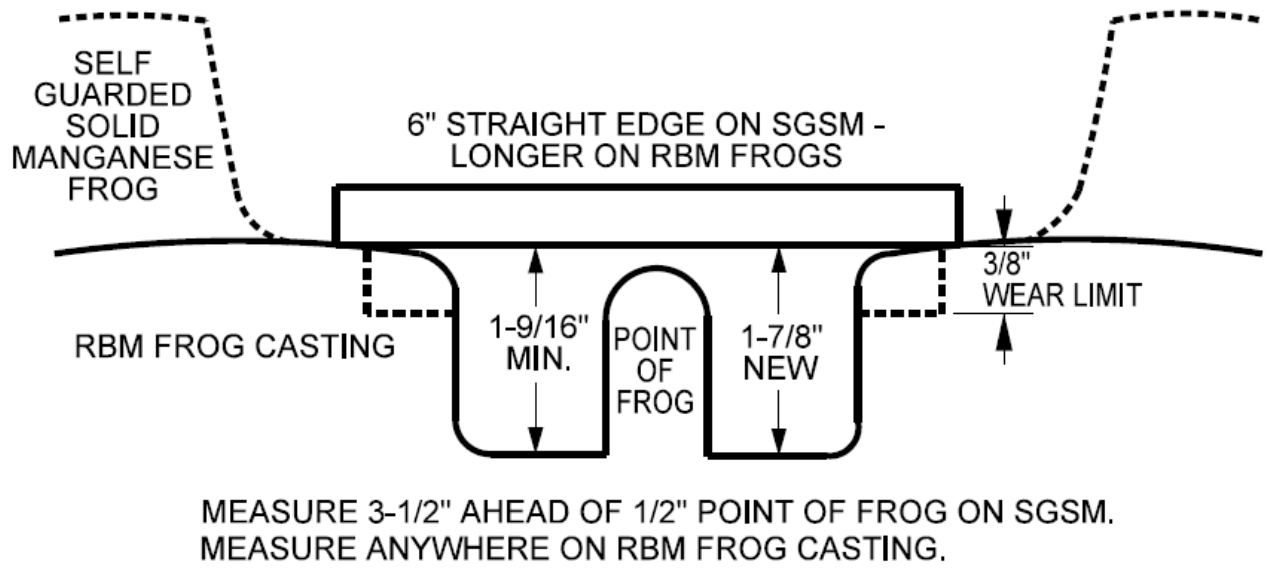

Figure 5-II

2. If the tread portion of a frog casting is worn down more than 3/8 inch below the original contour, restrict the operating speed over that frog to 10 MPH. Wear to be checked using a straight edge.
3. For self-guarded frogs, ensure that the distance from the gage line of the frog point to the guarding face does not exceed 4-3/8 inches as shown in Figure 5-JJ.
4. On OWLS crossing diamonds or Jump Frogs, any gouge made in the mainline running rails by the flange bearing wheels must not exceed ¾" in depth. If any gouges exceed this the mainline rail must be replaced or restricted to 10MPH.

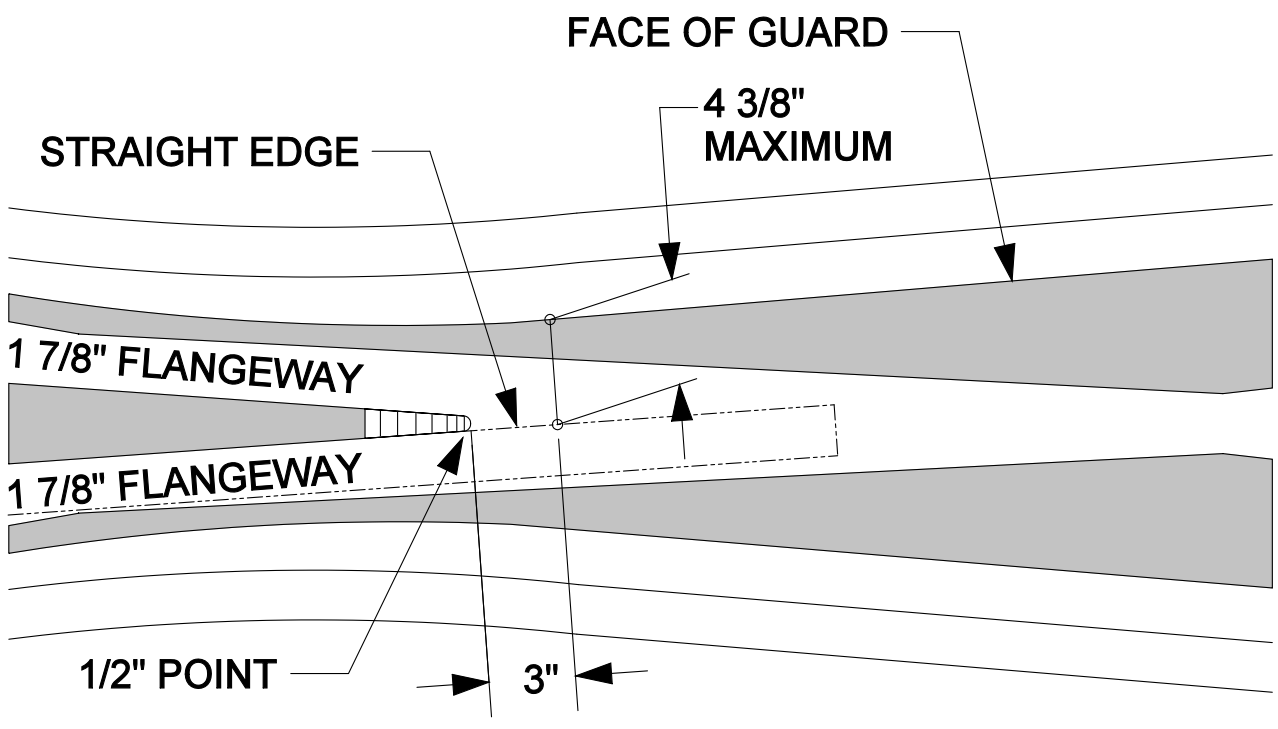

Wear Limit for Self-Guarded Frog

Figure 5-JJ

5.5.4 Frog Wear Conformal Frogs (Heavy Point RBM)

UPRR converted to the conformal top casting on all heavy point RBM frogs in the year 2005. The conformal top frog has a 1:20 slope on the tread or "wing" side of the casting that is designed to better fit the profile of the wheel. To identify a conformal top RBM casting lay a straight edge across the frog at the point, if the castings are sloped as shown in Figure 5-KK the frog is conformal.

Figure 5-LL shows a conformal top heavy point RBM frog. Although it can be difficult to detect visually the slope indicates a conformal top frog. Conformal top frogs will also be stamped Conformal or CF on the castings or will have Conformal indicated on the manufacturers ID tag.

Follow these requirements when measuring conformal frogs for wear:

1. Use the special conformal top gages to measure, flange depth and tread wear limits. Gages can be ordered using item number 555-6750 and 555-6751. Gages are sloped to account for the 1:20 casting slope. Not using these gages can result in inaccurate measurements of wear and depth.
2. When rebuilding conformal castings using a weld repair castings can be repaired back to a flat slope seen in figure 5-II. Weld repairing to the flat slope is simpler than trying to restore the 1:20 slope.
3. Conformal gages must also be utilized to check for point wear. Using a straight edge will provide an inaccurate measurement that does not account for slope.

4. At any point on the frog, flangeways must be a minimum of 1-1/2 inches wide and 1-9/16 inches deep. Tread portion must not have wear in excess of 3/8” below the conformal contour.

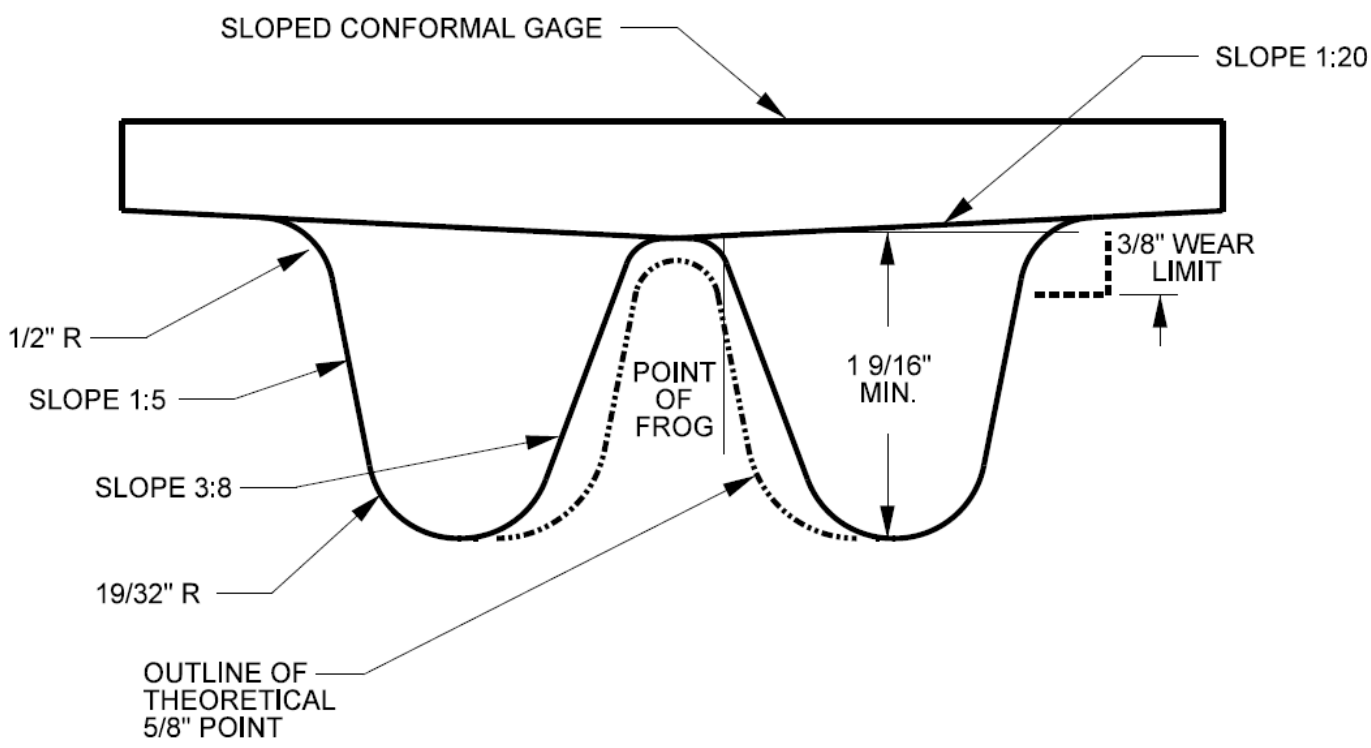

VERTICAL WEAR LIMIT ON CONFORMAL FROG FLANGEWAYS

Figure 5-KK

Figure 5-LL

5.5.5 Frog Guard Rail Size and Length

Follow these requirements for guard rail size and length:

1. Use guard rails that are the proper size. Position them correctly in relation to the frog. Refer to the appropriate turnout Standard Drawing for details on guard rail placement. Refer to Standard Drawing Nos. 4019 to 4090 and 160100 for more information on guard rail specifications and settings.
2. Use guard rail lengths for turnouts as shown in Table 5-E.

Frog Size	Main Track Guard Rail Length (Feet)	Turnout Guard Rail Length (Feet)
No. 7 and No. 9	13 feet*	13 feet
No. 10, No. 11, No. 14 and No. 15	19’6” feet	19’6” feet
No. 20 and No. 24	26 feet	26 feet

Table 5-E

*** If the track speed is greater than 40 mph, use at minimum a 19’6”-foot guard rail length.**

5.5.6 Frog Bolt Sizes and Torque

Determine the frog bolt and washer diameter and torque from Table 5-F.

Rail Size	Bolt and Washer Diameter	Torque (lb.)
85 lb. or less	1-1/8"	1,500
90 to 100 lb.	1-1/4"	1,750
110 lb. or more	1-3/8"	2,200

Table 5-F

5.5.7 Frog Bolt Installation

Replace frog bolts that are missing, bent, cracked or worn more than 1/8 inch in diameter, or that cannot be tightened to compress the washer.

Follow these requirements:

1. Use only frog bolts made from Grade 8 material. Grade 8 bolts can be identified by 5 tick marks on the bolt head. See Figure 5-NN.

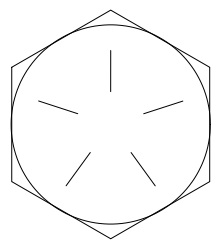

Grade 8 Bolt Marking

Figure 5-NN

2. Use proper length bolts that do not allow the threaded portion of the bolt to extend more than 1 inch past the nut.
3. Install frog bolts using a torque wrench as follows:
   a. Apply an approved never seize lubricant to the bolt threads and nut threads before tightening.
   b. Use one cam washer with a lock nut (Figure 5-OO):

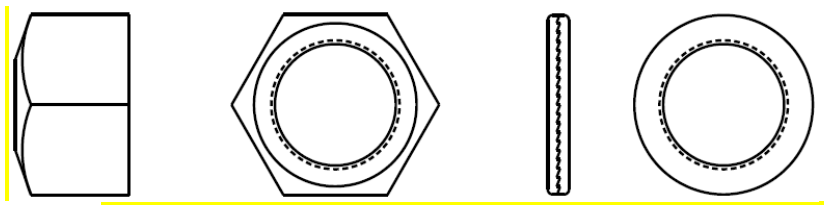

Figure 5-OO

   c. Tighten all bolts to the desired torque.

NOTE: On new rail crossing diamond installs, contact Methods and Research to tighten bolts before installation, and one month after installation.

4. When torque wrench is not available,
   a. Apply an approved never seize lubricant to the bolt threads and nut threads before tightening.
   b. Use one spring washer with a heavy hex nut or one flat washer with a heavy hex lock nut. See Figure 5-PP.

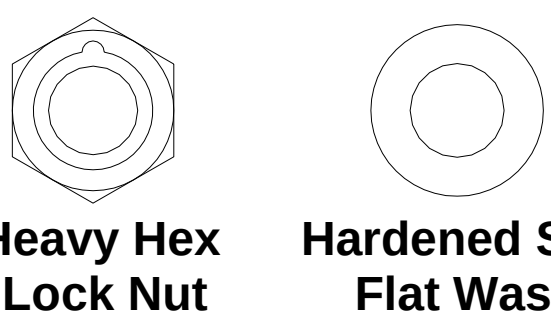

Figure 5-PP

   c. Tighten all bolts to refusal.

5.5.8 Frog Gage Plates

Fit frog gage plates to frog and guard rail plates after you have properly set track gage, guard check gage, and guard face gage. See Standard Drawing Nos. 3031 and 160200.

Frog gage plates must be insulated in signalized territories.

When installing a jump frog, gage plates are required between the mainline and frog to prevent excessive flange contact on the raised portions of the castings. See Standard Drawings 3043 and 3044.

5.5.9 Guard Check Gage

Minimum allowable limits for guard check and guard face gage are shown in Table 5-G. See Standard Drawing No. 4090 for further details.

NOTE: Many Spring and RBM frogs produced size #11 and larger are heavy point frogs. Heavy point frogs have additional material added at the point to increase long term wear resistance. To identify a heavy point frog you can either look at the frog point to determine if it is 31/32" wide at the cut as shown in Figure 5-QQ. These frogs will also be marked with HP on the casting or manufacturer's tag. Heavy point frogs have extra material that is added to the point that tightens the mainline gage. When installing heavy point frogs the FRA waivers allow for class 4 requirements to be operated at class 5 and higher provided that 3 gage plates are under the frog. Heavy point frogs should be setup at 54 3/8" guard check and 56 5/16" mainline gage.

NOTE: When measuring guard check and mainline gage through the frog area, care should be taken to take the measurement at 5/8" below the top of the frog point. If not you can lose distance on the guard check measurement. Best practice is to utilize a track inspector's level board to measure for best accuracy, when using a tape it is difficult to get the 5/8" point directly.

NOTE: Guard check and Guard Face gage are key players in keeping wheels from excessively contacting frog points. If frog point wear is excessive make sure to check gage to be sure that wheel flanges are not allowed to strike frog points excessively.

Class of Track	Guard Check Gage may not be less than	Guard Face Gage may not be more than
1	54 1/8"	53 1/4"
2	54 1/4"	53 1/8"
3 and 4	54 3/8"	53 1/8"
5	54 1/2"	53"
HEAVY POINT FROG, CLASS 5 *	54 3/8"	53 1/8"
6 to 9	54 1/2"	53"

Table 5-G

Figure 5-QQ

A. Gage Settings for Standard Point Frogs.

When repairing or installing standard point frogs set Guard Check Gage at 54-5/8 inches and mainline gage at 56 1/2 inches.

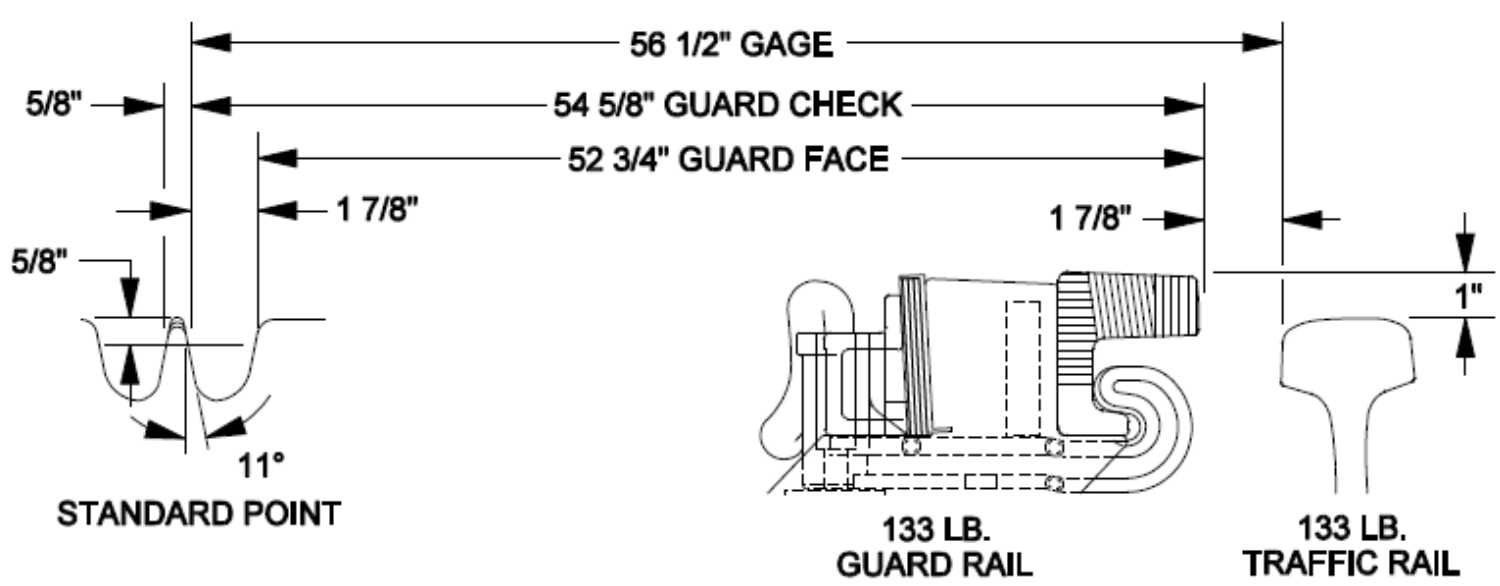

STANDARD POINT FROG AND GUARD RAIL

Figure 5-RR

B. Gage Settings for Heavy Point Frogs

When repairing or installing heavy point frogs set Guard Check Gage at 54-7/16 inches and mainline gage at 56 5/16 inches.

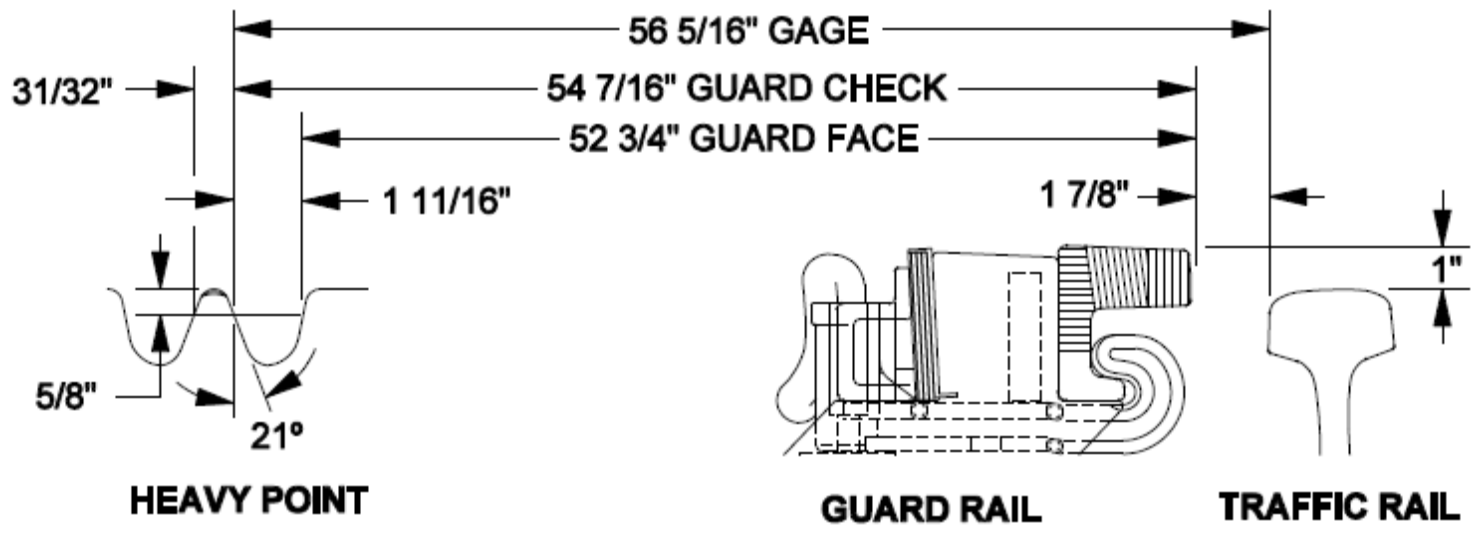

HEAVY POINT FROG AND GUARD RAIL

Figure 5-SS

NOTE: Heavy point frogs must have three gage plates (welded) under the frog and guard rails in Class 5 track to allow for Class 4 tolerances. This includes the turnout side. All heavy point frogs are required to be inventoried in the Track Inspection System. SPRING FROGS MAY ALSO BE CLASSIFIED AS HEAVY POINT FROGS, see Figure 5-QQ for identification.

Early wear may be detected on the tip of a heavy point frog, THIS IS NORMAL, this wear is intentional to establish early work hardening. For an example of normal early wear see Figure 5-TT.

Figure 5-TT

5.5.10 Jump Frogs

Jump Frogs can be utilized in locations where the turnout route has minimal traffic, less than 15 cars shoved at any one time, and the mainline or siding route is heavy traffic. Jump Frogs greatly reduce impact loads and can provide a large maintenance reduction.

Care must be taken to control the mainline and turnout gage to prevent excessive wheel flange contact on raised castings which could lead to a derailment.

1. Mainline gage through the jump frog must not exceed 57”. If 57” is exceeded the frog must be slow ordered to 25MPH until corrected. When possible mainline gage through the frog should be set to 56 ¼” during a new installation.
2. Jump Frogs are limited to 10MPH turnout side movement.
3. Jump Frog warning sign must be installed per Standard Drawing No. 0562. Care must be taken when hy-railing over jump frogs due to the raised casting potentially contacting the hy-rail wheels.
4. Gage plates must be installed between the mainline rail and the frog itself. Gage plates will help control gage and prevent excessive wheel contact. See Standard Drawing 3043 or 3044 for additional details. See Figure 5-UU.
5. All raised portions of the casting above the mainline rail surface shall be inspected for excessive flange contact during ordinary switch inspections. Excessive contact, such as large gouges or extreme amounts of polish, indicate a problem.
6. Shim plates must be installed beneath the turnout side guard rail per instructions on Standard Drawings 3043 or 3044. Shims help prevent stiff truck derailments of on-track equipment when traversing the turnout side.

7. Gouges in the head of the mainline rail caused by turnout movement flange wear should not exceed ¾” deep. If ¾” is exceeded slow order to 10 MPH and replace the mainline rail.
8. For Jump Frogs ensure that mainline rail wear does not allow the flangeway depth to be less than 1- 9/16”. See Figure 5-VV. Measure by using a straight edge on the mainline rail head to simulate the flat tread surface. Do not allow the flangeway gap between the mainline rail and casting to be less than 2”.

Figure 5-UU

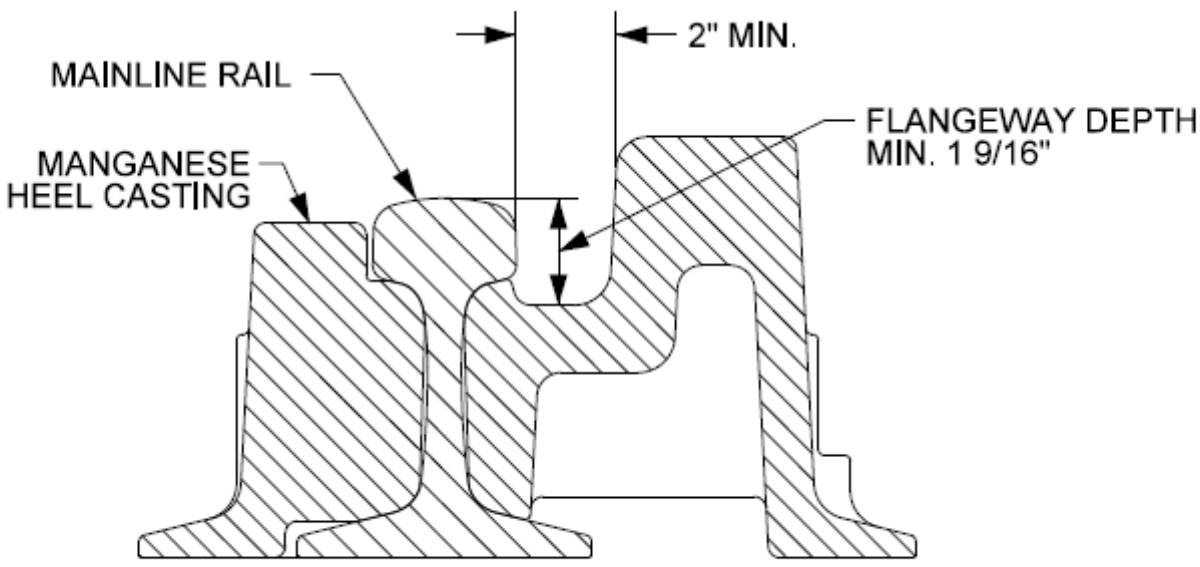

MINIMUM ALLOWABLE FLANGEWAY DEPTH ON JUMP FROGS

Figure 5-VV

5.5.11 Welding Repair of Guard Rails, Frogs and Diamonds

1. Do not build up guard rails by welding in the field.
2. Do not repair all-rail spring frogs by welding in track. Frogs with manganese inserts may be welded per current welding instructions for manganese components. See Form 7913, “Instructions for Inspecting, Welding and Grinding of Rail and Track Components”.
3. Crossing diamond manganese castings can be weld repaired using the same requirements for turnout Frogs.
4. The Flange Bearing castings on an OWLS crossing diamond frog or jump frog can be weld repaired to rebuild the flange bearing portion if the wear depth does not exceed 1”. At no time can the flange bearing area be raised more than its original height.

5.5.12 Spring Frog Inspection and Maintenance Procedures

An inspection and maintenance procedure on frogs is an important part of maintaining good, safe track. Spring Frogs can provide reduced welding maintenance from RBM’s if properly maintained. Spring Frogs in Class 2-6 Track are required to have a detailed inspection every 90 days. Due to the moving parts involved with the operation of a spring frog follow these steps to ensure that it is properly maintained.

A. Frog Body

Basic inspection and maintenance items required for all frogs include:

1. Checking for breaks and cracks in the rails and castings.
2. Replacing missing body bolts and keeping bolts torqued to 2200 ft/lbs. A torque wrench can be used, or a standard impact wrench can suffice.
   - Thin head body bolts are used along the spring wing on spring frogs. These bolts are not visible in the normal closed position and should be inspected by opening the spring wing with a hydraulic spreader.
     - Replacement stud bolts, with a thin jam nut, are available for replacement of these bolts.
   - Broken body bolts must be replaced with the thin head variety to ensure that the wing rail will fit properly along the body of the frog.
3. Grinding excess metal flow from the running surfaces to prevent chipping:
   - Slot mating surfaces between adjoining rails and castings to a depth of at least 3/16” and slightly beveled at the top.
   - Grind gage corners of running surface to a 5/8” radius.
4. Flangeway width not less than 1 ½”
5. Flangeway depth not less than 1 9/16”

6. Tread wear on casting not worn more than 3/8” as shown in Figure 5-XX.

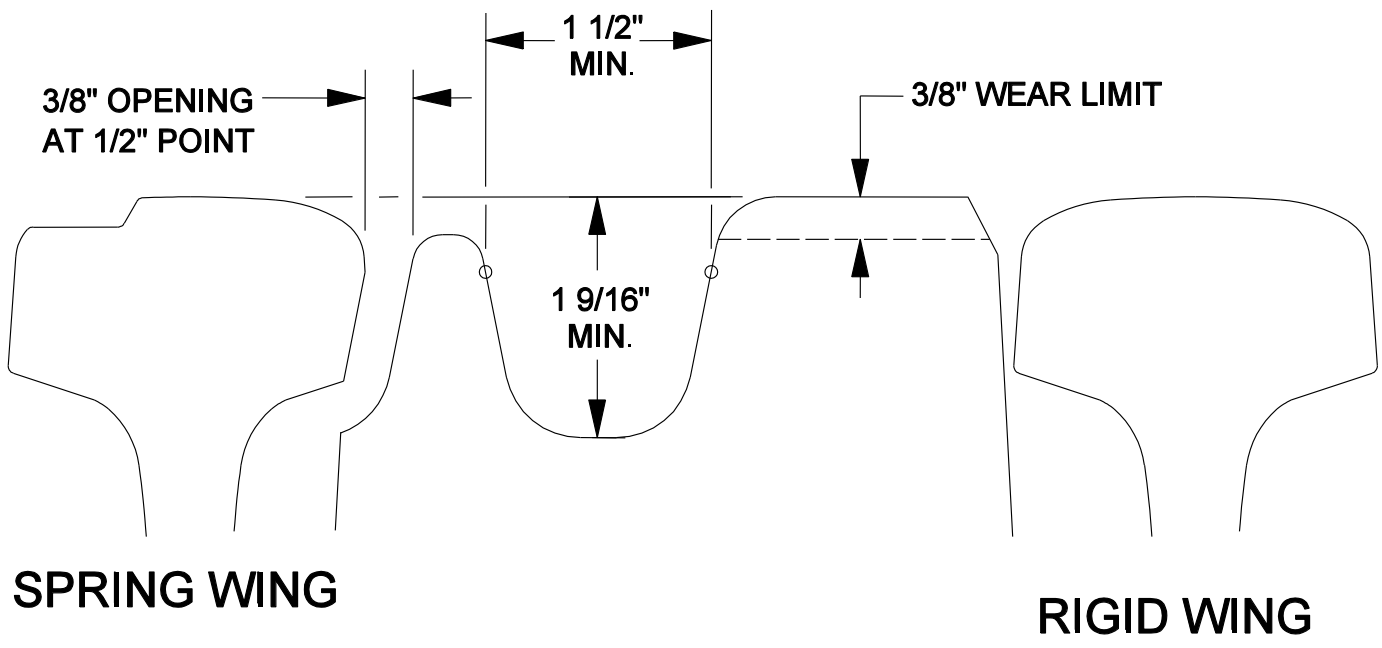

Figure 5-XX

7. Excessive wear and breaks on the point within 16” of the ½” PF should be repaired. This is the critical area where wheel transition between the point and the wing rail occurs.
8. If the running surface of the frog is worn or broken to the point where there are indications that the outer edge of the wheel is contacting the side of the spring wing rail, the frog must be repaired or replaced.
9. Track gage should not be less than 56 ¼” or more than 56 7/8”.
10. Guard check gage should not be less than 54 ½” on frog with a standard point. A heavy point frog guard check gage is 54 7/16”.

B. Handling

1. The spring wing is sensitive to movement. A two or four leg sling should be used during handling to minimize bowing or sagging.
2. If a toe block is not designed into the frog ensure that the match marks on the wing rail and frog body are lined up when installed. This will ensure that the spring wing is set correctly in relation to the frog body and horns centered in the hold-downs.

C. Surface and Line

1. Good tie condition and surface must be maintained throughout the frog area. Surface should not have a depression or crown of more than 1/8” in any 15’ length. Poor surface or cross-level can cause binding of the spring wing and place unnecessary pressure on the spring assembly.
2. Line should be maintained within 1/16” to minimize unequal bearing of the spring wing against the point rail. Unequal bearing and continual slapping of the spring wing can cause point failure and the spring wing to lose its bend set.
3. Tamping with automated equipment can bend the plates and may restrict the opening or closure of the spring wing if precautions are not taken. Auxiliary jacks should be placed under the far rail of the turnout opposite the tamper when surfacing through the frog area to assist in lifting. Surfacing through the diverging side of the turnout before the straight side will greatly reduce the amount of force necessary to lift the frog from the spring wing side. The rail clamps of the tamper should not be used to grab and lift the wing rail or plating anywhere along the base plate supporting the frog on the spring wing side. See Figure 5-YY

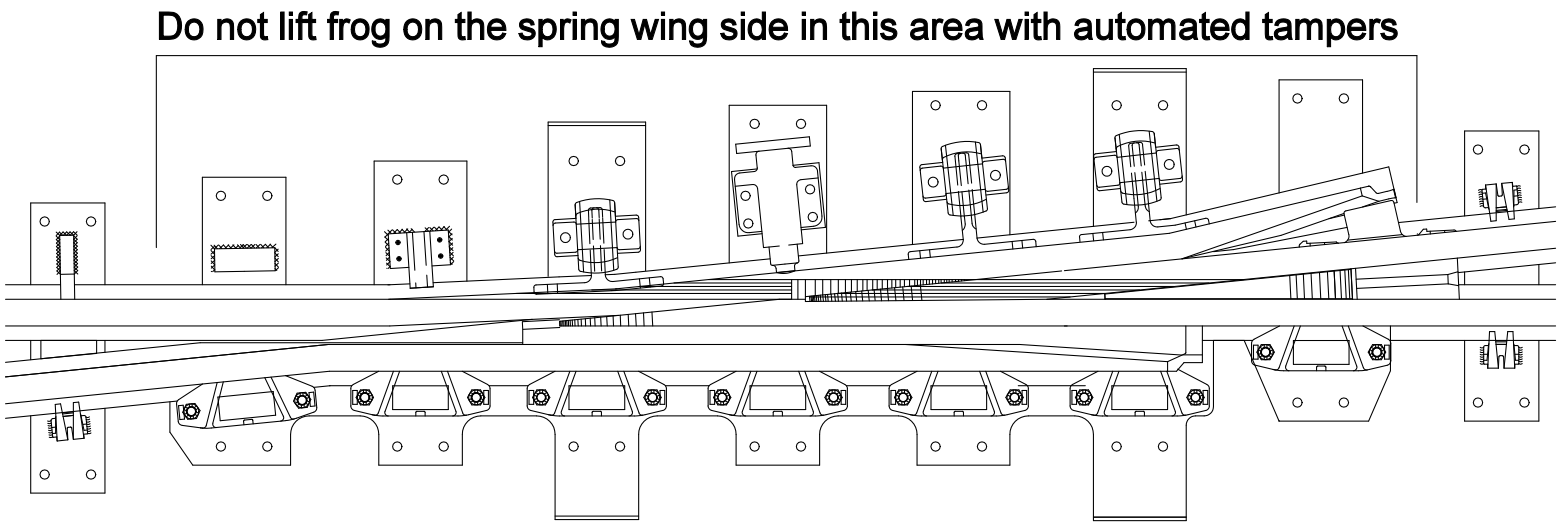

Figure 5-YY

4. Inspect base plates for damage after tamping operation if automated equipment is used.
5. Spring frogs should be hand tamped to avoid damage and ensure proper ballast distribution under frog body.

D. Toe Area of Frog

1. If there is a bolted joint:
   - Make sure all the bolts are in and tight.
   - Check rail ends for chipping or batter. Chips and batter should be repaired promptly and joint slotted with a slotting wheel no thicker than 5/32”.

- Carefully inspect the joint bars for any cracks. A joint bar with any type of crack must be replaced.

2. If there is a toe block, be sure the bolts are the correct size, in place and tight. The toe block provides a hinge point and helps to minimize longitudinal movement of the spring wing.
3. Check the tie condition under the toe to ensure that the ties are in good condition and solidly tamped. This is very important to minimize any vertical movement of the spring wing.

E. Spring Wing

1. Check the gap between the frog point and wing rail in the closed position. The design gap is 3/8 inch. A gap of no more than ¾" should be maintained.
2. Check the alignment of the spring wing along the frog body. The spring wing should fit up against the body of the frog along the entire straight portion of the rail.
3. If the spring wing is not set correctly against the frog body a closer inspection of the situation should be made to determine the cause. Some of the possibilities would include:
   - Inadequate anchoring – Inspect the anchor pattern. All switch ties and track for 120 ties each sides of the turnout should be fully box anchored to the extent possible. Check the anchors to be sure they are the correct size for the rail and they are up against the sides of the ties.
   - Spring box failure – Check that the spring box is in place and springs and spring retaining bolts are in good condition.
   - Retarder failure- If the retarder malfunctions it may not slow the wing rail. If there is no retarder, or the retarder is not functioning properly the constant impact of the wing rail against the frog body may cause point or wing rail failure, or the wing rail to lose some of its bend set.
4. A hydraulic spreader jaw (item number 410-6850) should be used to check the maximum wing rail opening width. Place the hydraulic spreader jaw in the throat of the frog just ahead of the point. On manganese insert frogs, the cylinder end of the jaw should be placed on the moveable wing rail so that the tabs of the spreader bracket fit underneath the rail head. This orientation will help anchor the cylinder to prevent it from dislodging. On all rail frogs the cylinder may be used in either orientation. (Figure 5-ZZ).

Insure that the spreader bracket is securely screwed into the cylinder head. If it is loose there is potential of the bracket head breaking off the cylinder.

Care must be taken when operating the spreader jaw. Do not place yourself in a position directly over the jaw when it is under pressure in the event that it would slip out. Generally a 1,400 to 2,000 psi gauge reading is all that should be required to open up the wing rail to the fully opened position. If the force is approaching the red area on the gage take pressure off the spring to reduce the force required to open the wing.

NOTE: MANY SPRING RAIL TESTING KITS COME WITH A CONVERSION TABLE TO CONVERT LBS. TO PSI. MAKE SURE TO FOLLOW THIS CHART TO AVOID DAMAGING THE TESTING KIT.

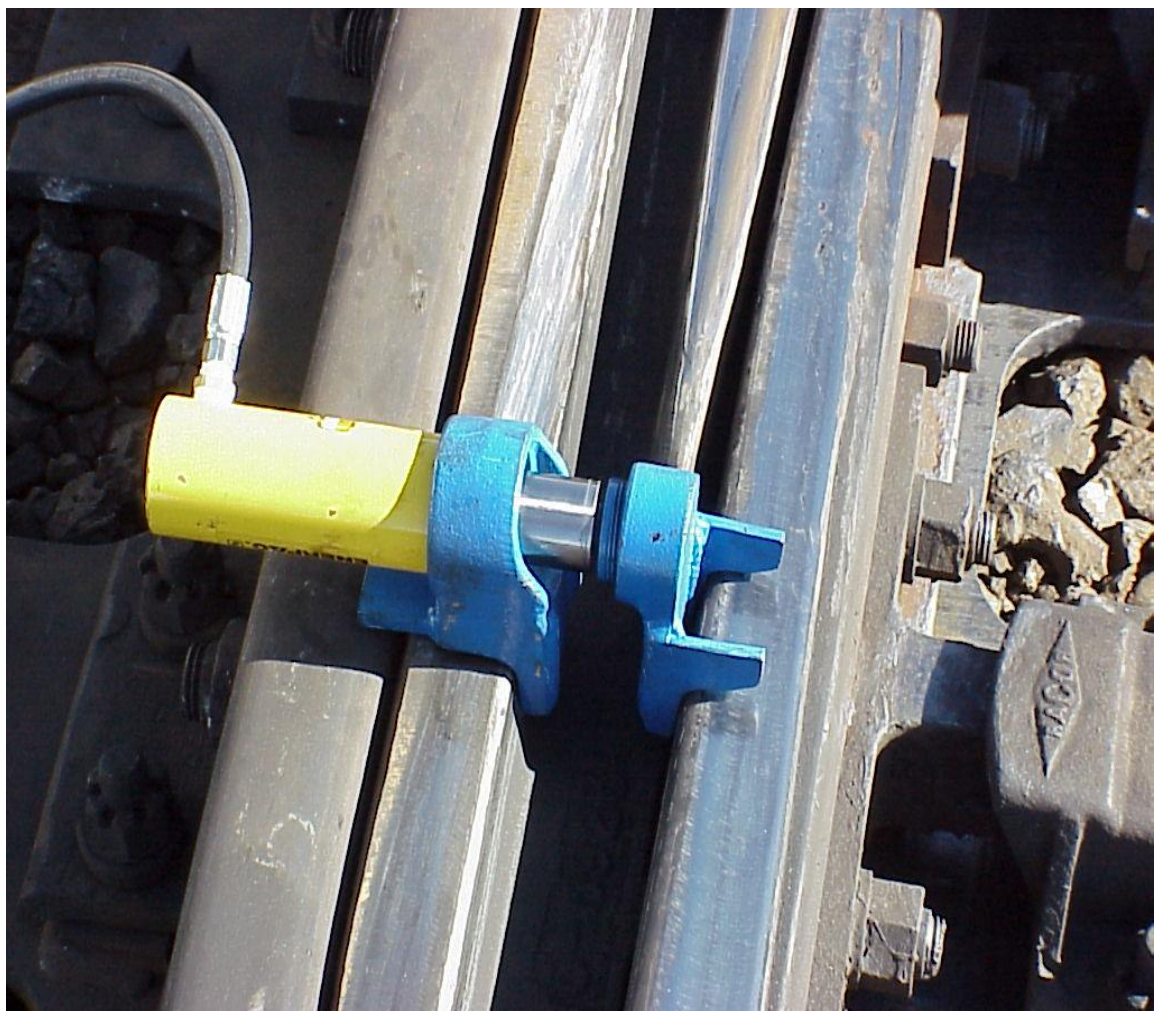

Figure 5-ZZ

5. **Begin by loosening the adjustment bolts to relieve spring tension. Reducing the pressure on the spring will prevent excessive pressure being placed on the spreader head.** Failure to loosen bolts will put excessive pressure on the spreader and may cause it to crack, by loosening spring tension prior to testing the spreader can more easily spread the wing. Use the jaw to open the wing until it is up against

the rail stops. Measure the spring wing flangeway opening at the Frog Point. Adjust wing rail stops if flangeway opening is more than 2”.

6. Inspect the flangeway area and the area over which the spring wing travels. This area should be kept clear of sand, dirt, snow, ice and foreign material. During times when snow and ice can be expected these must be cleaned or a method of heating or de-icing put in place. This must be performed to prevent a build-up of material under the wing rail or in the flangeway that would hold the wing rail open or force the wing to rise up off the base plate. With the wing rail in an open position or raised up, a passing wheel with a false flange could get down below the railhead and roll the wing rail causing a derailment.
7. Inspect the wing rail railhead. Check for any indications where the outer edges of the wheel may be contacting the railhead. This can be caused by:
   - Excessive tread wear on the frog body. In the case of an all rail frog, the frog should be replaced. In the case of a manganese frog the casting may be repaired by welding if the contact area is resulting from a localized defect.
   - Excessive vertical rail movement caused by a build up under the wing rail, in which case the flangeway and base plate area should be cleaned.
   - Excessive movements between hold downs and horns, in which case the clearances between these components should be adjusted.

F. Horns and Hold Downs

1. Each horn and hold down should be inspected for breakage or cracks. Damaged or worn horn and hold down assemblies may permit the wing rail to rise sufficiently to allow the outer edge of a wheel to contact the side of the wing rail and roll it out.
2. Forged components may be repaired by welding in the field. If two or more horns or hold down sets have required welding repair, the frog should be replaced within 30 days.
3. Cast components that break or develop cracks should be replaced. Bolt torque securing the horn and hold down assembly should be maintained at 600 ft/lbs.
4. Inspect each horn and hold down for wear. Excessive wear on the top and bottom of the horns and hold downs can be an indication of vertical rail movement. Excessive vertical rail movement can be caused by:
   - Poor surface
   - Poor ties
5. Excessive wear on the sides of the horn and hold down can indicate misalignment of the wing rail. Misalignment of the wing rail can be caused by:
   - Inadequate anchoring through the turnout (especially on frogs without toe blocks).
   - Insecure base plate
   - Insecure toe (Broken joint bars. Broken, missing or incorrect size toe block or joint bar bolts)
   - Loss of bend set on the wing rail (Missing or inoperative retarder)
6. The horn and hold down area should be lubricated with an approved switch plate lubricant to reduce wear and binding.
7. The clearance between the top of the horn and the hold down should not be more than 3/16”. The clearance between the bottom of the horn and the hold down should not be more than ¼”. The clearance between the side of the horn and hold down should be a minimum of 3/16”. These measurements should be taken at both the front and rear of the hold down assembly. A tape measure or ruler may be used where the horn can be plainly seen. Where the end of the horn is obscured by the hold down, a taper gauge with a range capacity of at least 3/8” should be used. Measurements that do not meet the 3/16” criteria must be corrected:
   - A forged hold down may be heated on top and hammered down until the 3/16" clearance requirement is met.(Figure 5-AAA)

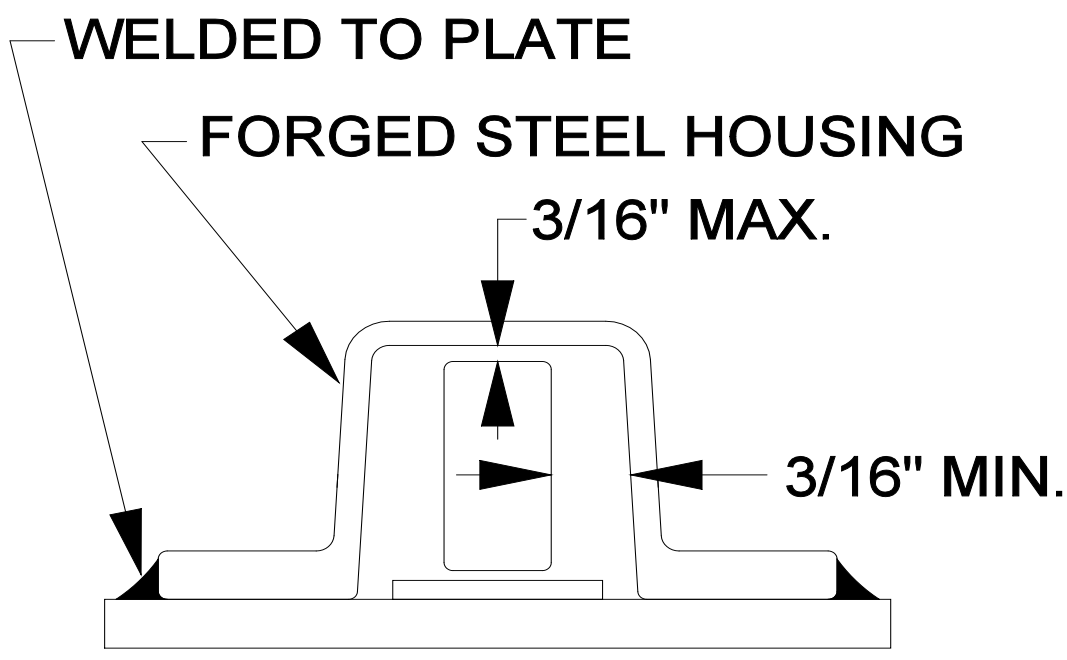

Figure 5-AAA

   - With a cast assembly the horn can be turned over or replaced, the hold down is reversible and replaceable, and the riser pad can be rotated, reversed or replaced. (Figure 5-BBB)

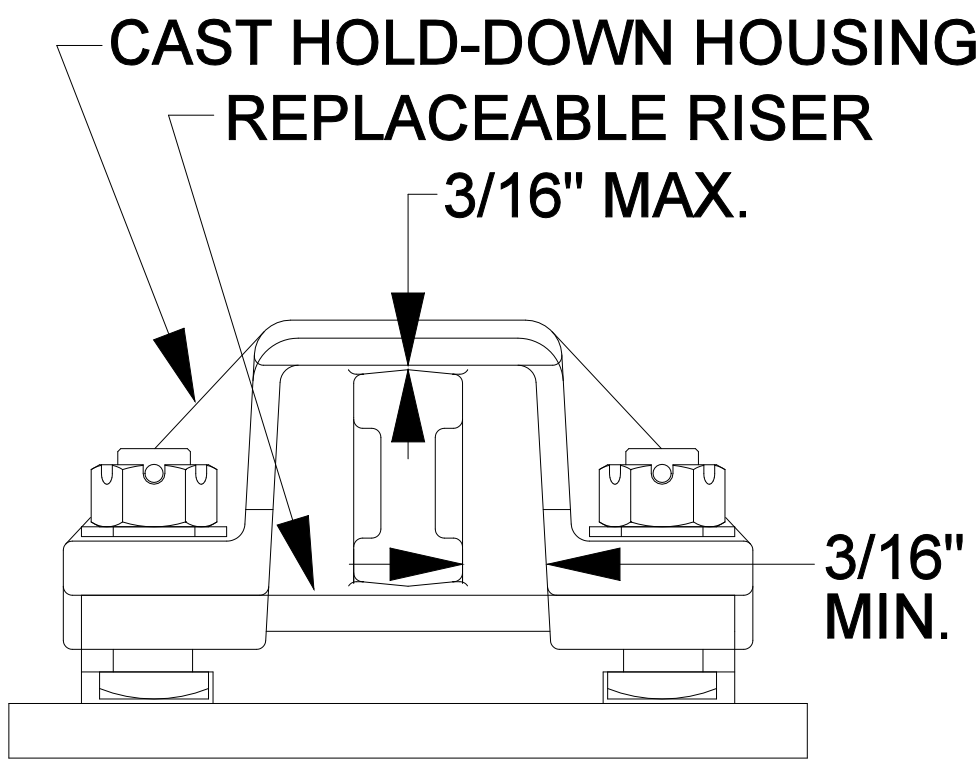

Figure 5-BBB

G. Spring Box Assembly

1. Inspect the spring box assembly to ensure sufficient pressure is being exerted to overcome the force exerted by the frog retarder and hold the spring wing against the frog body in the closed position. The normal force exerted by the spring box plunger against the rail is approximately 600 lbs.
2. Check the retaining nuts on the back of the spring housing to ensure they are in place.
3. The hydraulic spring testing device should be used to check the force exerted by the plunger against the side of the wing rail.
4. The jaw should be placed over the tapered portion of the spring plunger as shown in Figure 5-CCC.
5. The hand pump should be operated slowly until the plunger is first seen to move.
6. The reading on the gauge should then be noted.
7. Release the pressure and repeat steps a second time.
8. The average of the two readings will give an indication of the force.

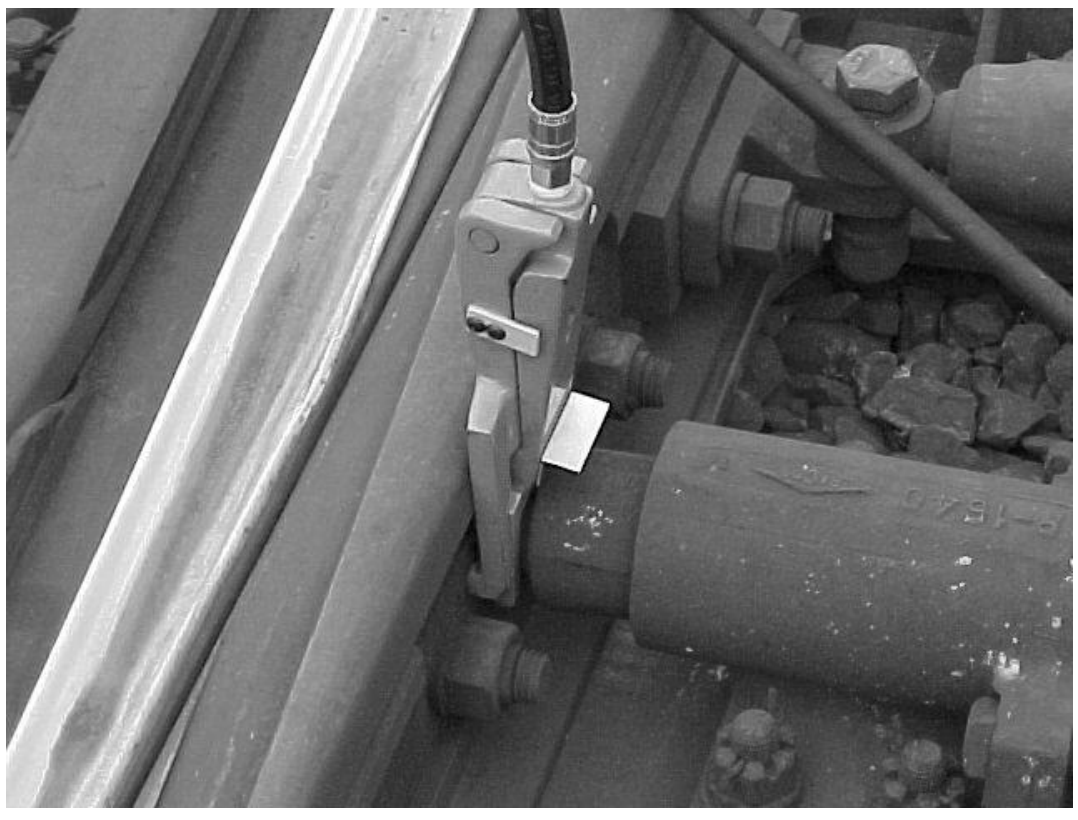

Figure 5-CCC

9. The green area of the gauge (4000 – 5200 psi) shows the acceptable range for the spring force reading. If the spring force gauge reading is below 4000 psi. in the white area of the gauge, the spring pressure should be increased by tightening the nuts on the retaining bolts until the force can be brought to this minimum. If the gauge reading is in the red area, above 5200 psi, and there is no hydraulic retarder attached to the wing rail, loosen the retaining nuts until the force can be brought down into the green area, between 4000 and 5200 psi. Before adjusting the spring force on frogs that have hydraulic retarders attached, check the closing time of the wing rail as described in the section on the hydraulic retarder.

NOTE: SOME DESIGNS OF SPRING FROGS HAVE TWO SPRING BOXES DUE TO THE LENGTH OF THE WING RAIL. WHEN THERE ARE TWO SPRING BOXES ON THE FROG THE SUM OF BOTH MEASUREMENTS SHOULD BE BETWEEN 4000 TO 5200 PSI. FOR EXAMPLE IF ONE READS 2500 PSI AND THE OTHER READS 2700 PSI THE SUM WOULD BE 5200 PSI. WHEN ADJUSTING AN EFFORT SHOULD BE MADE TO BALANCE OUT THE TWO PRESSURES SO THAT ONE DOES NOT HAVE EXCESSIVE PRESSURE AND FATIGUE THE SPRING.

10. A 1/8” of movement of the retainer nuts should equal approximately 500 psi. of force. This may vary, especially if the springs have been in use for a while. If sufficient force cannot be obtained the springs in the plunger must be replaced.

H. Spring Replacement

To replace a broken spring (see Figure 5-DDD) the nuts on the retaining bolts should be loosened alternately ½” at a time until there is no spring pressure felt against the follower backing plate.

1. Remove the retainer bolts and follower plate.
2. Pull out weak or broken springs. Pull plunger out to ensure all the pieces of a broken spring are removed.
3. A coating of lithium or switch plate grease should be applied to the inside of the housing to assure that the plunger will continue to slide smoothly in and out.
4. Where a double spring is used in the spring box. Both springs should be replaced at the same time if available. Item # 555-7775.

To re-assemble the spring assembly follow these steps;

1. Ensure that the wing rail is closed up against the frog body and the spring box plunger is up against the wing rail.
2. Insert the new spring(s) in the spring housing, place the back cover over the retaining bolts and push the springs up against the back of the plunger.
3. Screw the nuts on both retaining bolts up against the backing plate.
4. Mark the bolt with chalk or crayon at the point where the nut is now located.
5. Alternate tightening the nuts on the retaining bolts in ½” increments until 1” of travel has been achieved as verified from the mark on the bolt. This will give the 1” pre-load designed into the spring pack to achieve the force from the plunger into the wing rail.
6. Using the hydraulic force gauge, verify that a minimum of 4000 psi force has been attained.
7. If the required force has not been attained adjust the nuts on the retainer bolts.
8. Repeat last 2 steps until the required force is obtained.

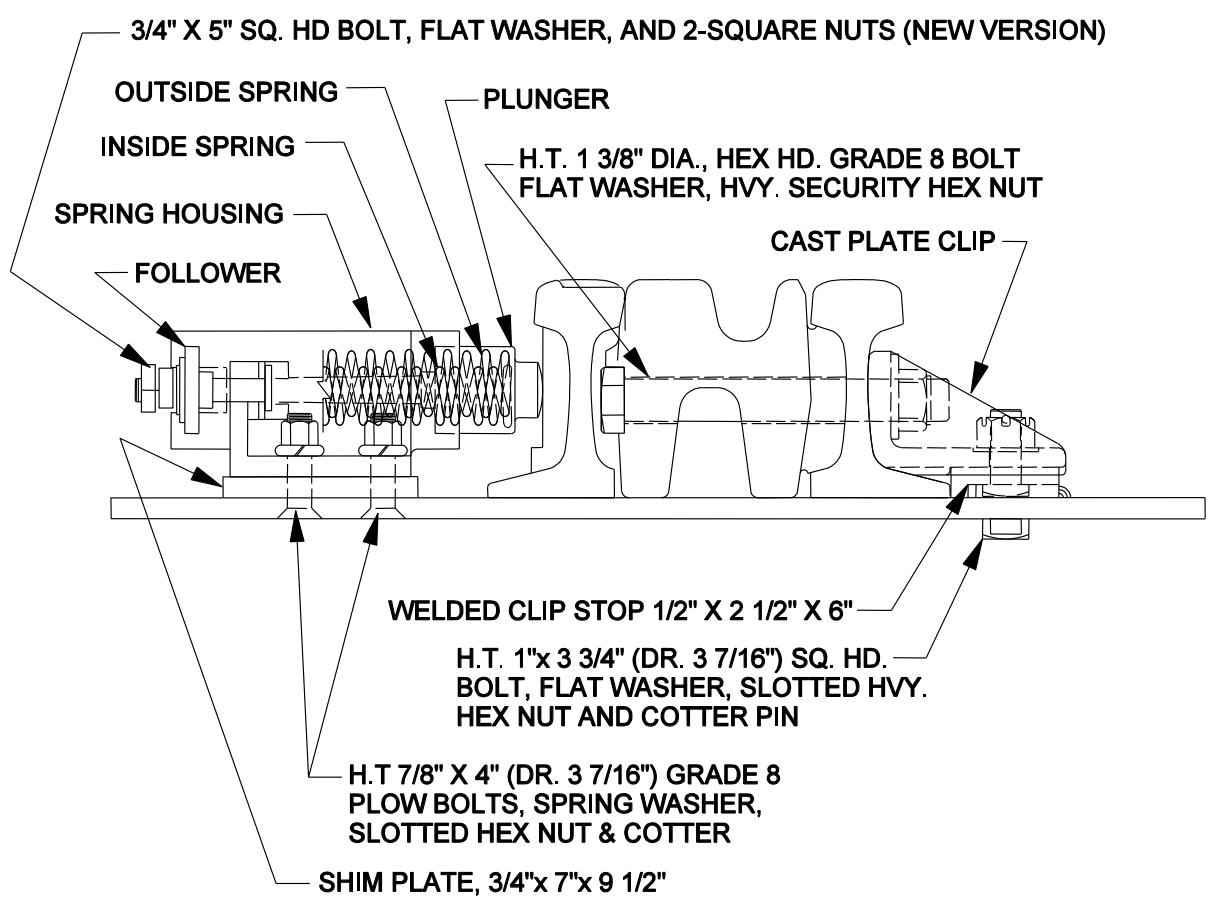

Figure 5-DDD

I. Hydraulic Retarder

Where frequent diverging moves are made through spring frogs by trains a hydraulic retarder is generally used to slow the movement of the wing rail return between passing wheel sets. A retarder should be used with spring frogs on dual control and spring operated switches. The amount of time that the retarder allows the wing rail to return to its normal position will vary. A range of between 10 seconds and 3 minutes is acceptable. Retarders should be installed per manufacturer instructions. Ensure that the steel bushing is present in the wing and plate brackets before installing retarder.

1. If the retarder is not operating properly it may fail by:
   - Offering too much resistance against the spring box and holding the wing rail open. This allows foreign matter to fill the spring wing flangeway and also causes point wear and added impact loading due to the wheels now having to jump a flangeway gap.
   - Offering too little resistance against the spring box allowing the wing rail to quickly close between wheel sets. This can cause premature spring failure, plate wear, bolt and point failure, and added impact loading on the spring wing which can cause it to crack or lose its bend set.

2. Visual inspection of the frog retarder:
   a. Observe that the unit is not physically damaged or broken.
   b. Check to make sure the bolts holding the retarder and wing rail bracket are in place and tight.
   c. Look for any signs of oil leaks on the body of the retarder or on the ballast underneath the unit that might indicate it is failing.
3. To check the retarder mechanically:
   a. Check the spring box pressure against the wing rail.
   b. If the spring pressure is within the green area, between 4000 and 5200 psi, on the force gauge proceed to next step. If the spring box pressure is not at an acceptable level see the previous section concerning spring box inspection before proceeding.
   c. Use the hydraulic wing rail spreader jaw to open the wing rail until it hits the stops that are welded on the frog plates.
   d. If any foreign material is observed in the flangeway opening use a stick or broom to remove it.
   e. Release the pressure in the spreader jaw and observe the movement of the wing rail.
   f. If the wing rail does not close within a 10 second to 3 minute range, use a lining bar near the heel of the wing rail trying to force wing rail toward the frog body.
   g. If the wing rail now closes on its own, observe if there are any shiny areas on the plate where the wing rail may have been binding. If the plate is bent it should be heated and straightened. Clean the plate area over which the wing rail travels and apply an approved switch plate lubricant to the base plate area.
   h. Inspect the horn and hold down assemblies to determine if any binding is occurring in this area. Apply an approved switch plate lubricant to the horns and hold downs.
   i. Repeat the process.
   j. If the wing rail still does not close within the specified time observe the lubricated area and check if there is spot where the wing rail is dragging. Check the surface along the frog. If there is any deviation in uniform surface more than 1/8” it should be corrected.
   k. Repeat the process.
   l. If the wing rail still does not close the retarder should be replaced.

J. Retarder Replacement

Note: Retarders are shipped from the manufacturer preset with a 20-5/8” length between the mounting brackets. This is done to ease the installation so a minimum of adjustment is necessary to line up the holes of the frog brackets with those of the retarder brackets. Do not compress the retarder before installing it, as it will be extremely difficult to expand out to reach the frog bracket. If the retarder does become compressed, use the hydraulic wing rail spreader to open the wing rail a sufficient distance to allow the mounting brackets to line up. Be sure to block the wing rail open before attempting to line up the bolt holes.

1. If the retarder has failed holding the wing rail open, place a block in the wing rail flangeway to prevent the wing rail from moving until installation is complete.
2. Remove the old retarder by removing the bolts attaching it to the wing rail and plate brackets.
3. Check the brackets on the wing rail and frog plate to confirm:
   - Wing rail bracket is tight
   - Rear plate bracket is not bent or twisted
   - Hardened steel bushings are in place in bracket bolt holes.
4. If not already performed, check spring pressure against the wing rail in the closed position as described in the Spring Box Assembly section.
5. Attach retarder to brackets according to manufacturer instructions.
6. Apply an approved switch plate lubricant to the base plate over the area where the wing rail will travel and on the horns.
7. Test the retarder operation by opening the wing rail with a hydraulic wing rail spreader tool until a 2” flangeway opening is obtained at the point where the retarder attaches to the wing rail.
8. Release the jack pressure and observe the time it takes for the wing rail to close. A closing time of 10 seconds to 3 minutes is acceptable.
9. If the closing time falls outside the acceptable range Refer to Section I-3 (Hydraulic Retarder) for Procedural Inspection Process.
10. If adjustments fail to bring the retarder within the specified range it should be replaced.

5.5.13 Welded Spring Manganese (WSM) Frogs

Many of the Spring Rail frogs purchased by UPRR since the mid 2000's feature a special stainless steel weld between the manganese casting of the frog and the running rails, see Figure 5-EEE for an example. This weld eliminates a joint in the frog and can provide reduced maintenance. In earlier generations of this frog type there have been issues with the manganese casting quality and quality issues around the welds. Due to these issues it is recommended that these frogs be fully inspected for these issues every month during the switch inspection.

1. Fully inspect the area within 6" of either side of the weld for cracking. If any cracks are present slow order the frog to 10MPH until replaced.
2. Inspect the outside edges of the manganese casting for signs of cracking. If cracking in the casting base is found place a 40MPH slow order on the frog until replaced. If the cracking extends to within 2" of the top running surface of the casting place a 10MPH slow order on the frog until replaced. For a sample crack see Figure 5-FFF.

Figure 5-EEE

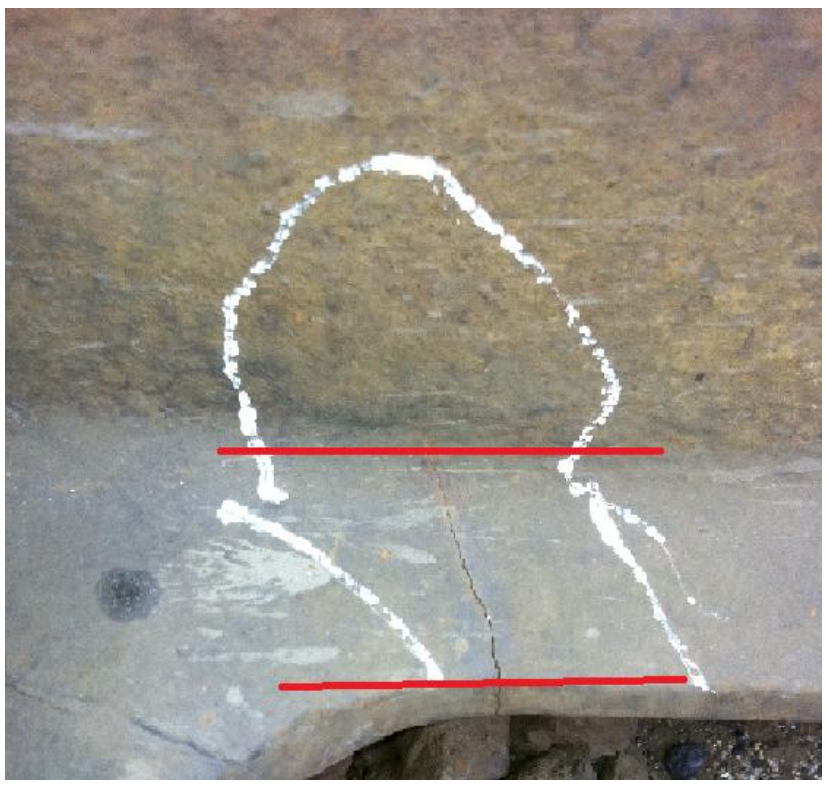

Figure 5-FFF

5.5.14 Movable Point Frog Inspection and Maintenance

It is very important to maintain MPF's to ensure safe operations. All MPF's must have a walking inspection performed every 30 days. The following guidelines should be followed during these inspections.

A. Frog Body

Basic inspection and maintenance items required for all frogs (see Figure 5-GGG) include:

1. Check for breaks and cracks in all rails.
2. Check all plates for breaks and cracks.
3. Replace missing body bolts.
4. The three bolts that hold the short point against the long point are shoulder bolts. With the proper arrangement of washers tighten these bolts to refusal.
5. Grind excess metal flow from the running surface to prevent chipping.
6. Slot mating surfaces between adjoining rails to a depth of at least 3/16" and slightly beveled at the top.
7. Grind gauge corners of all running rails to a 5/8" radius.
8. Flangeway width should not be less than 1 ½".
9. Track gauge should not be less than 56 ¼" or more than 56 7/8".

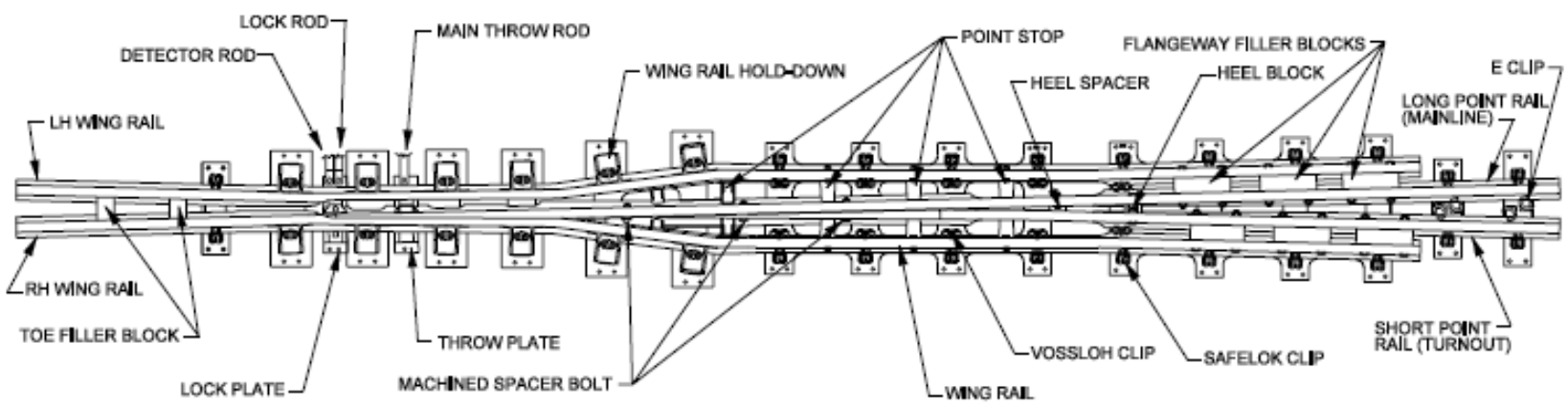

Figure 5-GGG

B. Surface and Line

1. Good tie condition and surface must be maintained throughout the frog area. Surface should not deviate more than 1/8” in any 15’ length. Poor surface in the point area of the frog will result in bending the point causing it to drag either on the plates or on the slide plate.
2. Line through the frog should be within a 3/8” through the entire frog length.
3. When tamping with automatic equipment it is very important to tamp the head block ties to ensure proper surface. If the connecting rods are not disconnected ties must be tamped using hydraulic tamping tools. Failure to do this leads to switch machine failures and has caused several service failures in both the frog point and the wing rails.

C. Frog Point Bolts

There are three (3) machined spacer bolts that hold the long point and short point together. These bolts allow the short point to slide along side the long point when the frog is reversed. These bolts must be perpendicular to the frog. Figure 5-JJJ shows these bolts slewed. If not corrected these bolts will shear off allowing the short point to gap, causing a serious condition.

If one of these bolts are missing the bolt must be replaced immediately or frog point must be clamped for main line use only.

Figure 5-JJJ

1. To correct this defect cut the rail behind the long point and drive the point forward as far as the heel block bolts will allow. Weld the rail, torque the heel bolts to 2000 ft/lbs and replace all three of the machined spacer bolts and washer assemblies and tighten. The front two bolts are the same and may be order through e-procurement using item number 555-6040. The third bolt is slightly longer and may be ordered using item number 555-6042. Bolts come with all washers, nut and cotter pin.
2. After frog point has been adjusted replace all pads, insulators and clips for 120 ties in both directions of the turnout. Adjust rail anchors as necessary.

D. Slide Plate

The slide plate that is mounted to the bottom of the frog point that has the switch machine rods attached to must be maintained much the same way as switch rods.

1. Ensure that bolts holding this plate to frog point are tight at all times.
2. Maintain at least a gap of 1/16” to allow free movement of the point.
3. A gap of more than 3/8” must be repaired.
   (See Figure 5-KKK.)

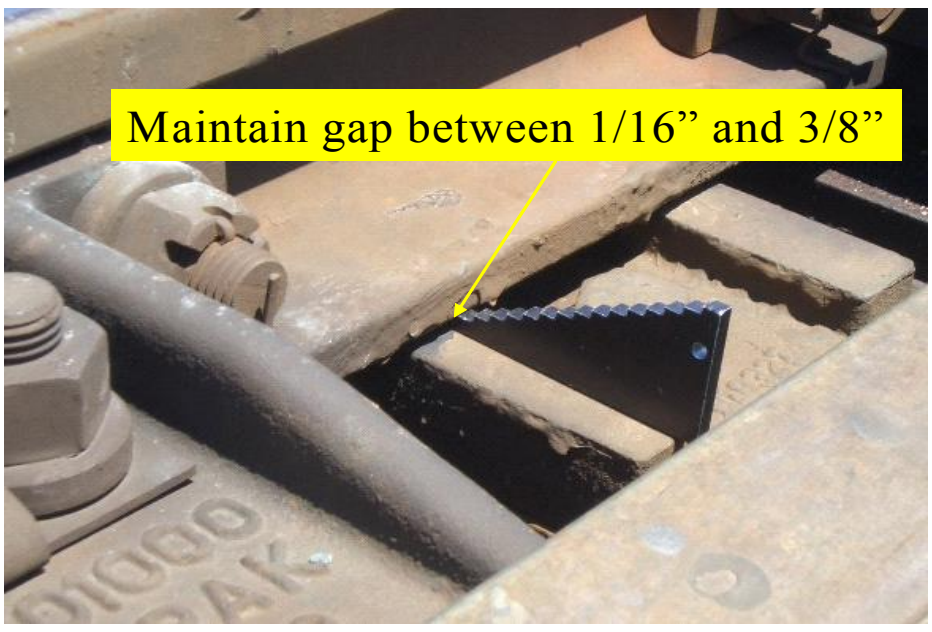

Figure 5-KKK

E. Point Wear

Corrugated rail wear can occur on the point of a MPF between 4’ and 6’ behind the actual point. Point wear of 1/8” should be scheduled for replacement within 30 days. Point wear of 3/16” or more must have operating speeds reduce to 25 mph until frog is replaced.

1. To check this wear use a 36” straightedge.
2. Slide straightedge along the top of the running surface to determine the greatest depth of wear.
3. Measure the wear using a feeler gauge or step gauge. (See illustration in Figure 5-LLL.)

Figure 5-LLL

F. Lubrication

Frog plates must be lubricated periodically to allow free movement of the frog point. When lubricating plates also place a small amount of lubricant between the long and short point where the two points slide against each other.

5.6 Turnout Maintenance

For further details on switch inspection and maintenance, see the UPRR standard work.

NOTE: In track circuit territory, notify the Signal Department in advance when: Changing rails, frogs, switch points, or switch stands. Performing work that may compromise the integrity of the signal system.

5.6.1 Switch Rods

Follow these requirements:

- Repair or replace transit clips, helper rods, connecting rods and switch rods that are bent or broken.
- Ensure that all bolts are in place. Do not over tighten the bolts connecting the switch rods and transit clips. This connection must be allowed to pivot as the switch is thrown for proper operation.
- Clean ballast and foreign material out from the connecting rod and switch rod cribs for a distance of 2 inches below the rod, as shown in Figure 5-MMM.

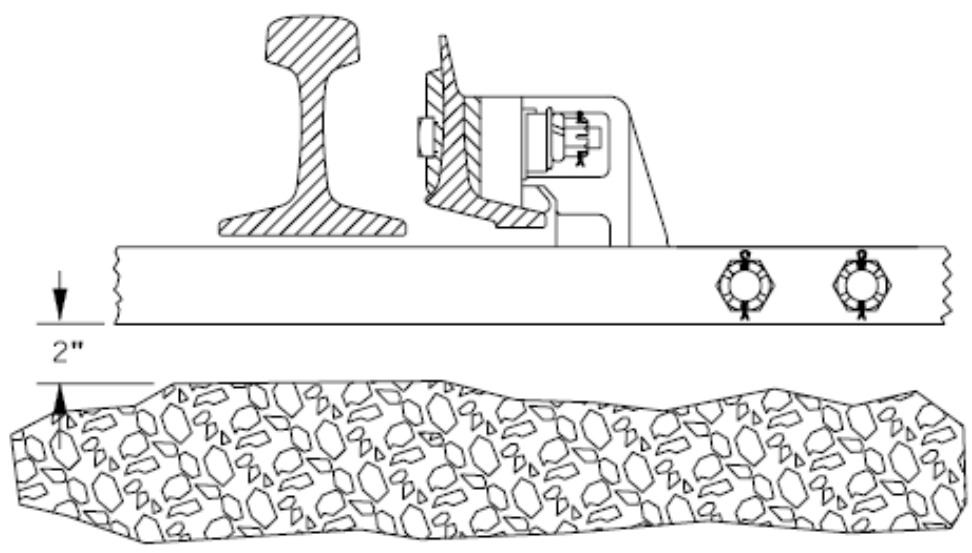

Figure 5-MMM

5.6.2 Switch Points

Follow these guidelines for maintaining switch points properly:

- Check the condition of the switch point stops and make sure they are intact and tight.
- Switch point rollers, if installed, should turn easily. Lubricate or replace rollers as needed.

A. Switch Point Throw

Maintain the dimension between the back of the switch point and the gage side of the stock rail at 4-3/4 inches at the No.1 switch rod location, as shown in Figure 5-NNN.

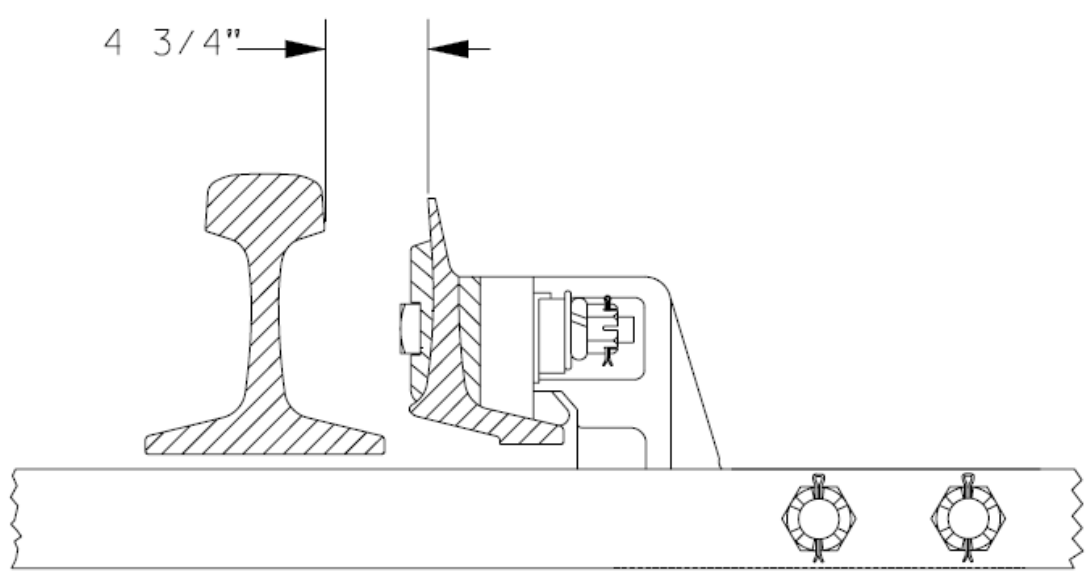

Figure 5-NNN

EXCEPTION: Tangential design turnouts may have throws up to 7 inches.

B. Switch Point Fit

Follow these requirements:

- Grind off metal flow on the stock rail and switch point that prevents the switch point from fitting up flush against the stock rail. Readjust the point for a tight fit. See Figure 5-OOO.

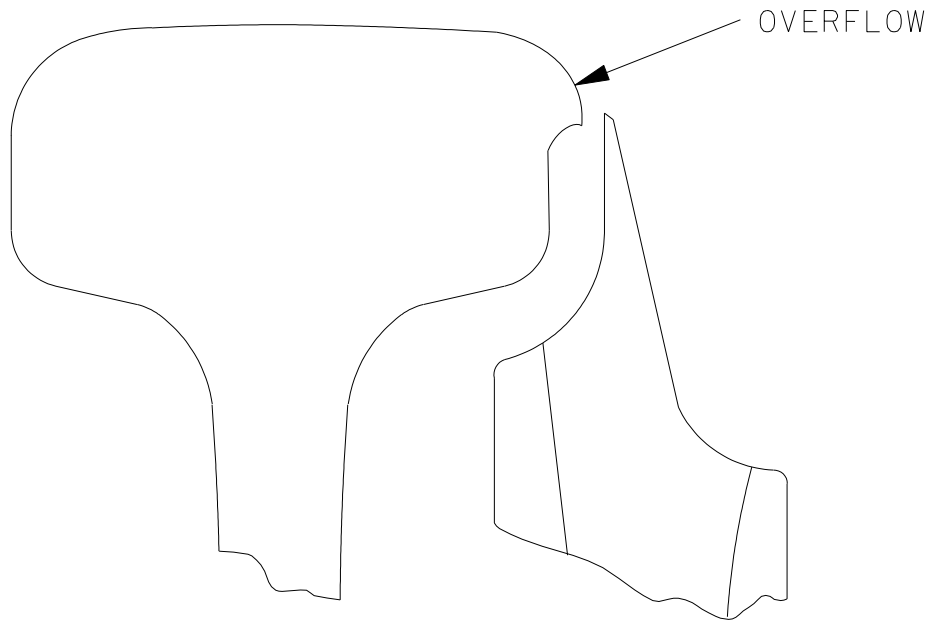

Figure 5-OOO

- Limit switch points to a maximum of 1/2 inch vertical movement at the tip when the switch point is closed against the stock rail. Calculate this measurement by adding the measurement of the clearance between the top of the no. 1 rod and bottom of the stock rail and the measurement between the bottom of the switch point with the top of the base of the stock rail. See Figure 5-PPP.

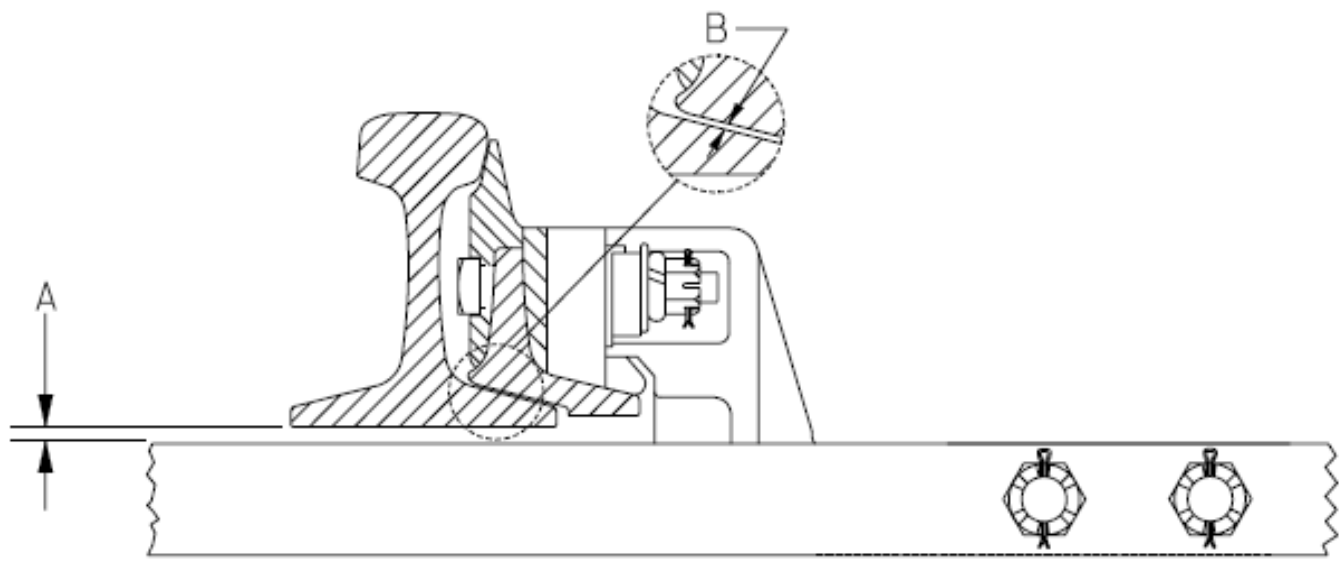

A + **B** ≤ ½

Figure 5-PPP

C. Switch Point Wear

Follow these requirements:

- Repair or replace a switch point that is worn down or chipped so that the top is more than 7/8 inch below the plane across the top of the stock rail. See 5-QQQ and Table 5-H.

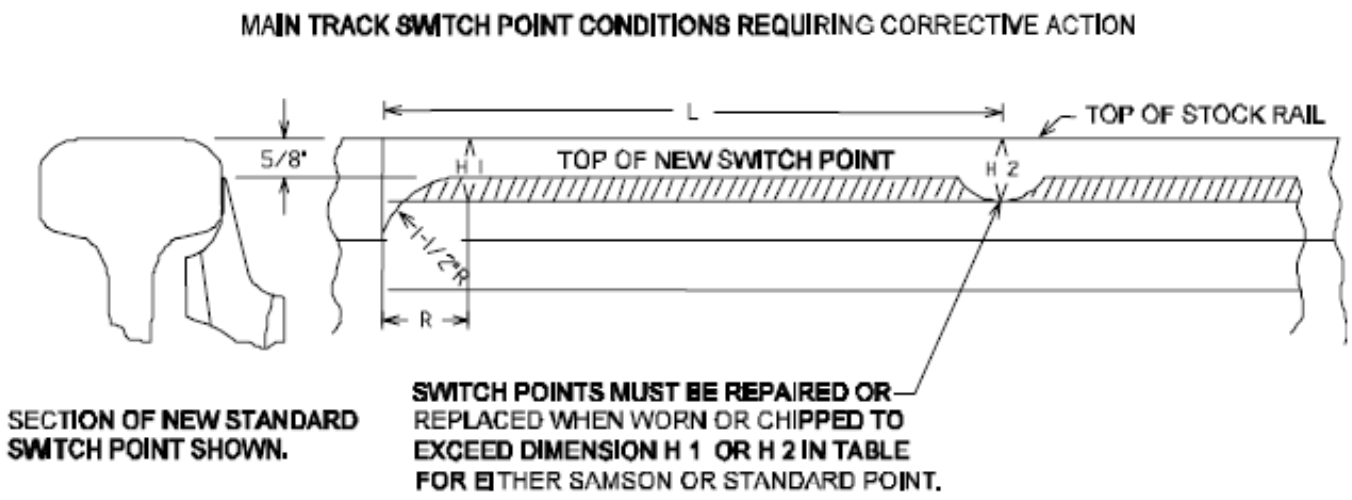

Figure 5-QQQ

Length of Switch Point	Distance			
	R	H 1	L	H 2
Up to 19' 6''	1-1/2"	7/8"	Over 10"	3/4"
19' 6" or over	1-1/2"	7/8"	Over 16"	3/4"

Table 5-H

- Repair or replace a switch point that is chipped and has an unprotected vertical surface that is 5/16 inch or wider 3/4 inch below the top of the stock rail as indicated by Figure 5-RRR.

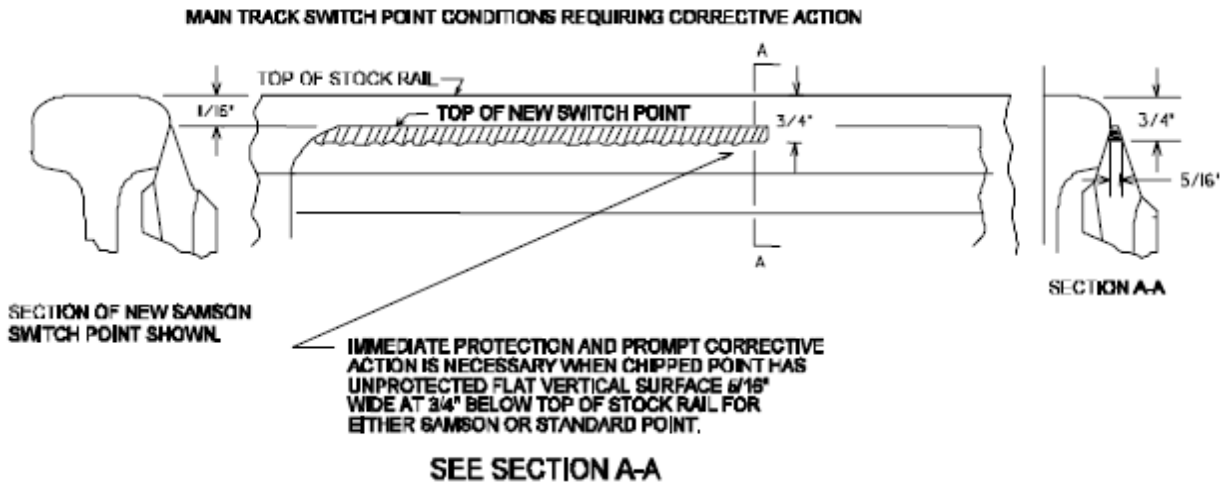

Figure 5-RRR

- Lightly lubricate switch point tips with switch plate oil or grease to prevent excessive wear.
- Switch points should rise a minimum of 3/16 inch above the stock rail where the wheel transfers from the switch point to the stock rail. This prevents the outer edge of the wheel tread from contacting the gage side of the stock rail. If this measurement falls below the 3/16-inch limit, replace the switch point and stock rail. See Figure 5-SSS.

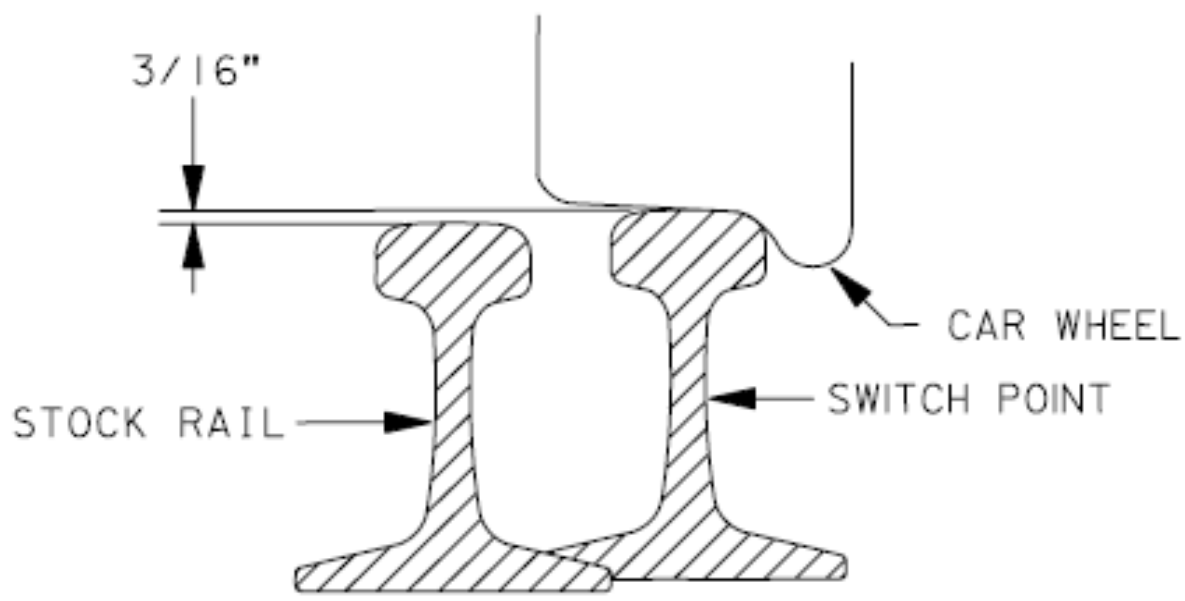

Figure 5-SSS

5.6.3 Frog and Guard Rails

Follow these requirements:

1. Ensure that all bolts and fastenings are of the proper length and diameter and are kept tight.
2. Keep each switch, frog, and guard rail free of snow, ice, and other obstructions that may interfere with wheel passage.
3. Keep frog wear within the limits prescribed in Section 5.5. Wheel marks in the flangeway indicate a worn frog that needs to be repaired or replaced.
4. Set guard check gage and guard rail settings as shown in Section 5.5.9.

Note: On spring frogs the stops must be maintained to not allow the wing rail to open more than 2” at the point.

5.6.4 Lubrication

Follow these requirements:

1. Lubricate switch plates where switch point movement occurs as follows:
   a. An approved switch plate lubricant may be used where switch plates are and will remain clean.
   b. Where switch plate surface contamination is a problem, use only a dry film lubricant such as graphite.
   c. Lubricate frog plates on spring frogs and movable point frogs over the area the rail travels.
2. Lubricate the switch heel joint assembly (if present) with switch plate lubricant.
3. Lubricate the switch stand to ensure proper operation.

5.6.5 Cleaning

Follow these requirements:

1. Clean out ballast and foreign material from the connecting rod crib for a distance of 2 inches below the rod.
2. In the area surrounding the switch stand and turnout where switching operations are performed, clear out obstructions that might hinder walking.
   - When clearing snow from turnout areas, be careful to avoid piling snow where it would blow back into the switch area.
   - Do not use salt mixtures to de-ice switches in track circuit territory.
   - During winter months when snow can be expected, keep switch brooms and shovels at main line turnout locations for use by train and engine crews.
3. Keep flangeways free of snow, ice, and obstructions.

5.6.6 Switch Heaters

1. The Signal Department will install and maintain electric and gas-fired switch heaters.
2. Where oil-fired switch heaters are used, the Track Department will install and maintain them.

Follow these requirements:

- Place oil-fired heaters where they will not interfere with switch rod movement.
- Ensure the oil heater is completely extinguished before refilling it.
- Remove oil heaters from the track after the last snowfall of the season.

5.6.7 Component Warranty

Many of the switch components purchased by UPRR come with a warranty from the manufacturer. The warranties vary greatly by manufacturer and product type. When a component fails prematurely it is critical that the following information be collected and given to Methods and Research:

- Product Serial Number (off the tag on the item, or cast into the item)
- Photos of the item and the defective condition
- Date of the failure and type of failure
- Installation date

The installation date should be inscribed with an indelible marker on the following track components when replaced.

- Frogs
- Guard Rails
- Spring Frog Retarders
- Switch Points
- Stock Rails
- I-Bonds

Common warranties for trackwork items are as follows:

- Frogs: 3 to 5 years from install. 250 to 500 MGT accumulated
- Switch Points and Stocks: 3 years from install. 250 MGT accumulated
- Ties: Varies greatly, contact Methods and Research
- Insulated Joints: Generally 500 MGT accumulated
- Guard Rails: 3 years from install. 250 MGT accumulated

5.7 Derails – Permanent & Portable

5.7.1 Installation of Permanent Derails

1. Inspect and evaluate territory for correct placement of required permanent derails. Refer to Standard Drawing Nos. 2000 through 2010.

   - All mainline routes require the use of derails on all industrial or auxiliary tracks that connect to the main line or sidings.
   - Placement of derail(s) on controlled sidings:
     - Prior to installing derail(s), Manager Signal Maintenance (MSM) will contact the Manager Signal Design to determine proper method of disabling signals governing movement through the siding. Manager Signal Design will then confirm the disabling procedure in a lotus note to both the MSM and the Sr Manager Signal Operations. After the disabling procedures have been confirmed, signal personnel will disable the signals.
     - The MSM will request Signal Operations Control (SOC) to open a ticket that will remain in hold status until the signals are tested and returned to service.
     - SOC will contact the dispatch center to arrange for the issuance of a Form C track bulletin removing the siding from service. The train dispatcher will then place switch blocks on all dual-control siding switches.
     - Engineering personnel will spike or clamp and tag (out-of-service) all switches leading to or on the controlled siding.
     - Engineering personnel will place derail(s) 25 feet from the first and last car in the siding. Derail(s) must be secured and locked with a padlock to prevent removal.
   - To ensure that the correct derail type is used, the grade of the industrial/auxiliary track must be determined.

     1. To determine grade and the likelihood of cars rolling out of a track, all grades must be evaluated for at least ½ mile from the proposed derail location, if track length permits. Note: Level track is defined as plus or minus .25% (3 inches of rise or fall over 100 feet).
     2. Permanent derails must be placed a minimum of 50 feet beyond the 13 foot clearance point.
     3. Installation of the permanent derails should be such that the locomotive or car will derail away from the protected adjacent track or structure.
     4. Unless movement over permanent derails is expected, leave derails lined and locked in the derailing position except where otherwise authorized.
     5. Place permanent derails on solid ties and secure hinge and sliding derails with coach screws.
     6. Locate permanent derails on the outside rail of curves. When necessary to derail rolling stock towards the inside of a curve, install a type two or three derail.
     7. When a hinged or sliding derail is in the derail position, it must lay flat on top of the rail and fully cover the head of the rail.

5.7.2 Hinged or Sliding Derail Installation

When using a hinged or sliding derail it is critical to ensure it is the correct size to match the rail height and that it comes fully locked when closed. See Standard Drawing Nos. 2007, 2008 or 2009 for detailed installation instructions.

To size the derail take the measurement from the top of the ties at the installation location to the top of the rail using a straight edge set across the top of rail. This measurement in inches will indicate the size of the derail. For example 7” will be a size 7 derail. If the measurement is 7.5” then a size 7 derail will be required with a ½” shim to bring the height to 7.5”. Figure 5-TTT shows a correct installation.

DESCRIPTION	ITEM NO.
1/4" PLASTIC SHIM	559-4050
1/2" PLASTIC SHIM	559-4060

If sliding derail does not come down directly on top of the rail (sits above the rail head and will not come down on top) try moving the derail away from the rail slightly. This should allow the derail more room to slide down onto the railhead. If this does not work go to the next size smaller derail. If the sliding derail is hitting the rail head a size bigger derail or additional shimming is needed. Larger or smaller tie plates can also be used to move the head of the rail up/down. Plastic shims can be utilized to ensure the derail is sized correctly, however should be the last option used.

To secure the rail use a cutoff tie plate that does not protrude beyond the base of the rail on the gage side. Plate can be cut on one end by a welding torch.

Correct Installation

- This derail correctly locked into place. The thrust shaft is barely visible and there is no gap between the thrust shaft and the front seat.
- This was a size 7 derail installed at a location with a measurement of 7” from the top of the rail to the top of the tie.
- By visually inspecting the derail looking to make sure this thrust shaft is resting on top of the front seat is a visual indication that the derail is locked into place.

Figure 5-TTT

5.7.3 Use of Portable Derails

Portable derails are to be used only for temporary applications where permanent derails cannot be installed. Portable derails must be applied per the procedure below and UPRR Standard Drawing No. 2003.

Portable derails may not be used to protect tracks with grade greater than 0.25% ascending away (uphill). Calculate grade by using a 32’ stringline and string level. If one end of your level stringline is on the top of the rail and the other end is over one inch (1”) off the rail at 32’, then the track has a grade greater than 0.25%.

Portable derails must be stored inside a locked tool box or storage box on vehicles or inside of a locked storage facility. If no lockable tool box is available on a vehicle for storing portable derails, they must be chained using a grade eight chain and lock or otherwise secured and locked to the vehicle.

When UPRR Standards require a permanent derail and one does not exist where cars are being stored, a portable derail may be used only if the grade is flat or descending away (downhill) from the protected track. Portable derails may only be installed for a maximum of 30 days. After 30 days, the proper derail must be installed, or the cars must be removed and the track removed from service.

Any portable derails that are struck by equipment must be discarded and replaced.

Portable Derail Installation Procedure

1. Select a location with a solid cross tie to install the derail.
2. Loosen set screw and screw handle of the derail.
3. Determine the direction of traffic to be protected against as it will dictate the required orientation of the derail. Position the derail on the inside of the rail with the graduated teeth section facing away from the direction of traffic. See Figure 5-UUU.
   CAUTION: Ensure the derail is level and parallel to the rail.

4. Position the graduated teeth securely against the corner of a cross tie or tie plate on the inside of the rail.
5. Adjust set screws on the field side of the derail to fit securely under the head of the rail.
6. Hand-tighten the screw handle of the derail to secure derail to rail.
7. Install padlock (Item Number 170-6103).
8. Install warning flag.

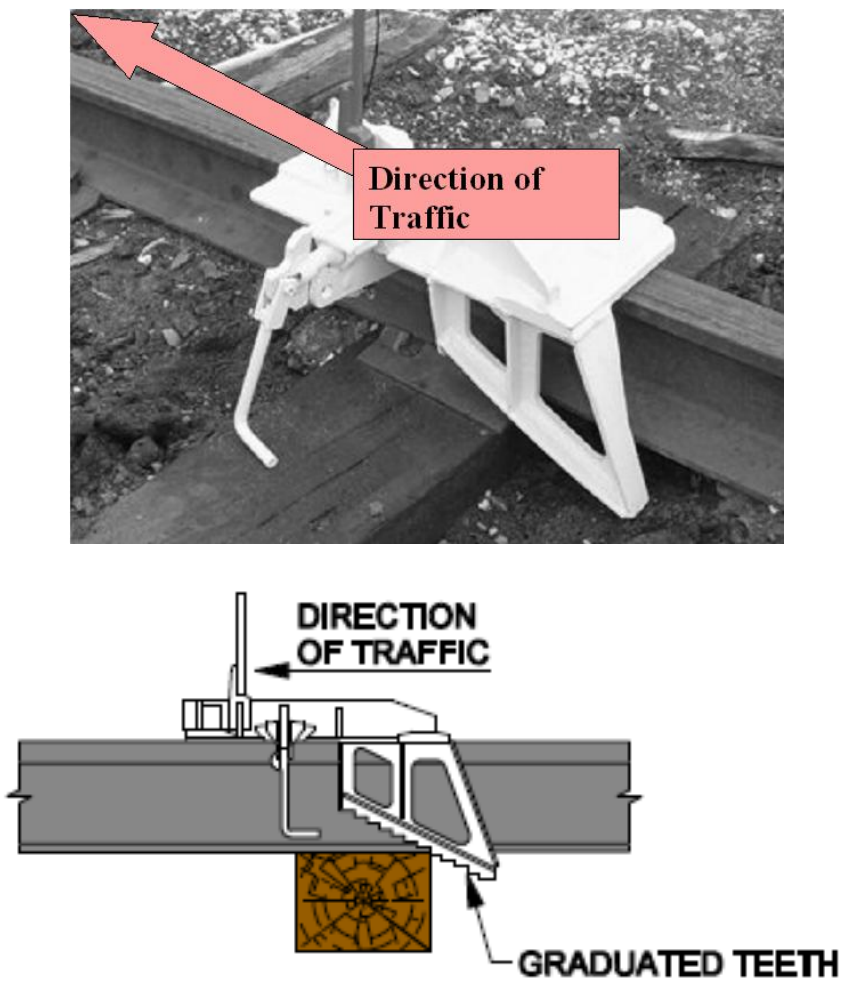

Figure 5-UUU

5.8 Foul Point

1. Ensure the foul point on industrial, auxiliary and yard lead tracks are clearly marked with yellow paint. If paint is faded repaint. See Figure 5-VVV. See Standard Drawing No. 0026 for more details.

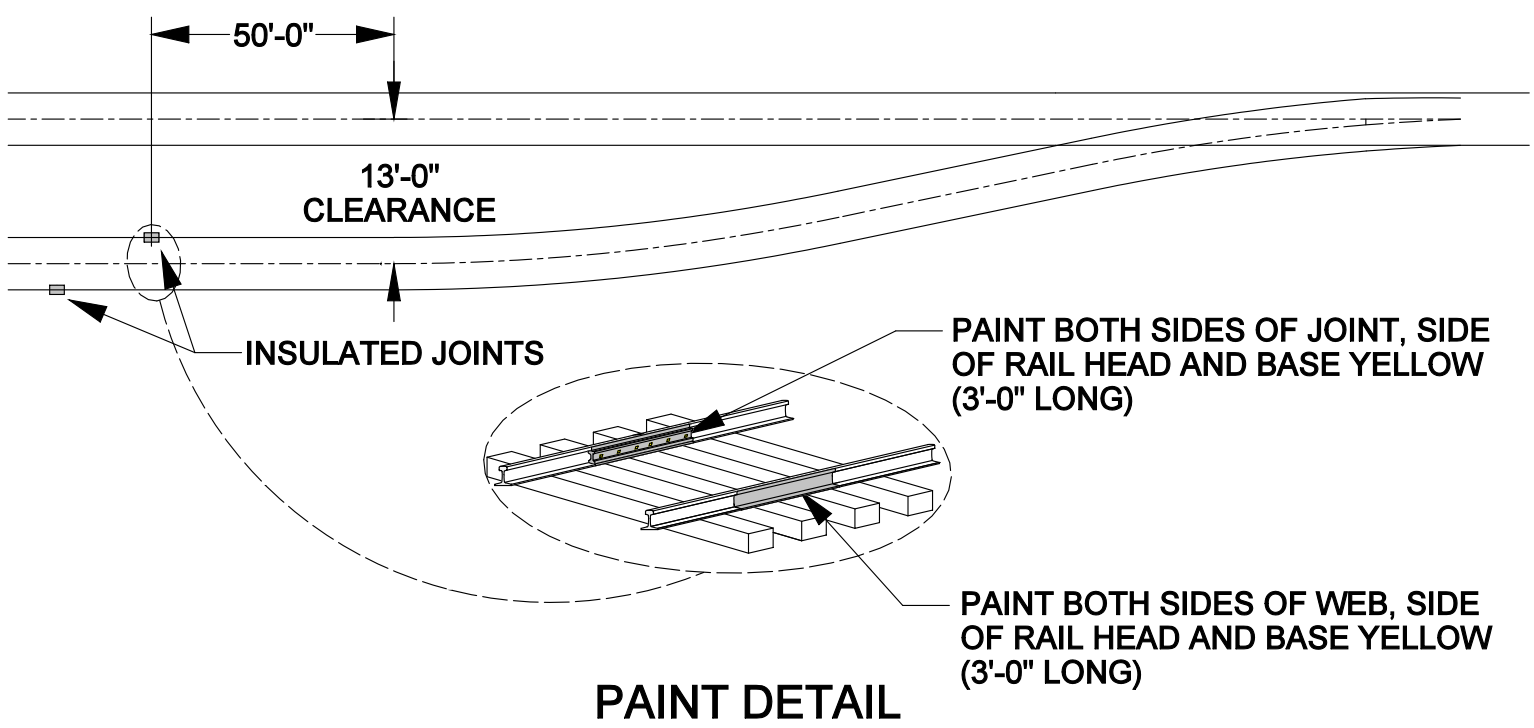

Figure 5-VVV

2. Ensure the effective insulated joint and adjacent rail are painted yellow in all fouling sections unless the entrance to the Main Line is controlled by an Absolute Signal.

   The recommended Yellow Paint is Rustoleum Sunburst Yellow #7747.

5.9 Frog Grinding and Slotting

Follow these requirements for grinding and slotting frogs:

1. Grind flowed metal from frogs as needed to maintain a 5/8-inch radius on the gauge corners of all castings and/or rail pieces. Grinding is especially important with new installations while the metal is being work hardened. Item number for the 5/8-inch gauge is 410-1985. See Figure 5-MM.
2. When grinding, do not remove metal below the gauge corner in the flangeways except in conjunction with welding repairs.

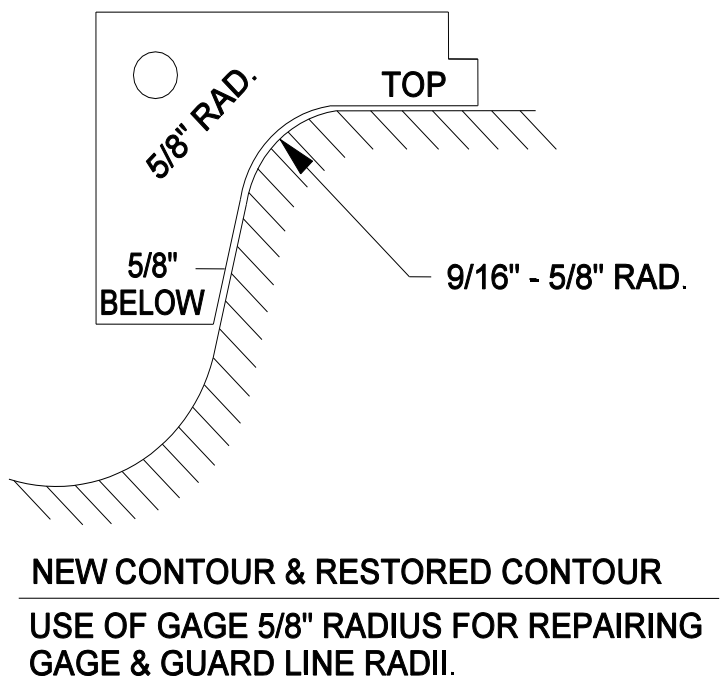

Figure 5-MM

3. Use a slotting type grinding wheel to remove flowed metal from all mating or joining surfaces between the frog casting and/or rail pieces. Components should be slotted to a depth of 3/16 inch and slightly beveled at the top. Refer to Form 7913, "Instructions for Inspecting, Welding, Grinding and Heat Treating of Track Components" for further instructions on frog grinding procedures

6.0 RIGHT OF WAY AND OTHER FACILITIES

6.1 General 6-2
6.1.1 Loading and Unloading Material 6-2
6.1.2 Housekeeping 6-3
6.1.3 Property Damage 6-3
6.2 Vegetation Control 6-3
6.2.1 General 6-3
6.2.2 Chemical Herbicides 6-3
6.2.3 Clearing for Sight Distances 6-3
6.3 Fire Protection 6-4
6.4 Roadway Signs 6-4
6.4.1 General 6-4
6.4.2 Whistle Signs 6-4
6.4.3 Standard Highway Crossing Signs (Crossbucks) 6-5
6.4.4 Clearance Warning Signs 6-6
6.5 Roadways 6-6
6.5.1 Grade Crossings 6-6
A. General 6-6
B. Crossing Warning Devices (Passive/Active) 6-7
C. Crossing Drainage 6-7
6.5.2 Right of Way Roads 6-7
6.6 Fencing 6-7
6.6.1 Livestock 6-7
6.6.2 Snow 6-7
6.7 Bridges and Culverts 6-8
6.7.1 Bridge Identification 6-8
6.8 Environmental 6-9
6.8.1 Hazardous Material and Waste Spills 6-9
6.8.2 Illegal Dumping 6-10
6.9 Fiber Optics 6-10

6.0 Right of Way and Other Facilities

6.1 General

Employees must maintain the railroad right of way to Union Pacific Engineering Standards. Keep the right of way free of debris, trespassers, and encroachment. Safeguard material and property.

Everyone at Union Pacific plays a vital role in the company's security and in safeguarding information regarding rail shipments.

1. In your daily interaction, be alert for any suspicious or unusual activity:
   - Be aware of people who may ask probing questions about the railroad and its operations, either in person or via telephone, e-mail and other forms.
   - Don't disclose information about UPRR operations unnecessarily - don't disclose train schedules, business lines or any other information to anyone who does not have a "need to know." Be polite but firm in handling inquiries from individuals who do not have a need to know.
   - Report all trespassers or suspicious people on UPRR property, including rail fans.
   - Report any items that are out of place, such as boxes on the right of way, or items attached to a rail car, bridge or tunnel.
   - Report vehicles on the right of way, yards or facilities whether occupied or abandoned.
2. Be proactive:
   - Make sure doors to files, offices and buildings are properly secured or locked when not in use.
   - Remember to log off computer systems or shut off your computer when not in use.
   - Keep passwords and codes secure - never share them.
3. Remember:
   - Anyone may be a potential security threat to fellow employees and railroad infrastructure.
   - Never take any action that will put you in harm's way.
   - Gather as much information as possible and report it to Response Management Communications Center (RMCC) at 1-888-877-7267 (888-UPRR-COP).
   - If you witness or experience any event that you feel is life threatening, call 911 followed by a call to RMCC.

6.1.1 Loading and Unloading Material

Follow these requirements for loading and unloading material:

- Store track material in a secure location. Neatly stack it until you are ready to use it.
- When distributing track material along the right of way, place it in locations that do not create a hazard for employees or the general public.
- When stock piling ballast or other material near road crossings, ensure visibility for vehicular traffic is not impaired.
- Place material a minimum of 7 feet away from the nearest rail.
- Unload ties and poles perpendicular to the rail on fills if there is a chance that they may roll.
- Do not lay material in ditches where it may impede water runoff.
- Do not unload material under power lines.
- When distributing track material ahead of and behind projects may create a stumbling hazard for train and engine employees performing their duties along the track, notify the train dispatcher and issue a Form C track bulletin to warn employees of poor footing.
- Unload company material in a timely manner and promptly release it from loaded status.
- Do not load rail cars without first obtaining a Shipper Car Order from the DHCO Center in Omaha at 402-544-4037. Order cars far enough in advance to allow for delivery time.
- When loading new or relay rail into gondola cars, use wood stickers between the rows to facilitate easy stacking and unloading.
- Evenly distribute loads throughout the length of the car.
- Do not load loose material above the sides of cars if there is a chance it may fall out.
- Bill loaded cars promptly.
- Do not load cars beyond the rated capacity stenciled on the side of the car. If the spring gap between the coils on the outer springs of the car is less than 3/16 inch, the car is overloaded.

6.1.2 Housekeeping

Follow these housekeeping requirements:

1. When work has been completed at a specific location, leave the work site clean and orderly.
2. Pick up OTM released from track and sort it for reuse or scrap.
3. Return scrap to a designated container or area. Return all unused material to the storage site.
4. Collect tools at the end of the workday and secure them where unauthorized persons cannot access them.
5. Lock or secure vehicles and equipment when not in use to prevent theft or unauthorized use.

6.1.3 Property Damage

Follow these requirements:

- Direct public inquiries for damage claims against the railroad to Risk Management at 1-800-638-3891.

6.2 Vegetation Control

Follow these requirements for controlling vegetation.

6.2.1 General

Control vegetation so that it does **not**:

- Obstruct the view at grade crossings, signals, and signs.
- Foul the ballast section and toe path. Generally the toe path is the approximate location where the bottom slope of the ballast section intersects the roadbed. In certain locations the side slope of the ballast section from the clearance point to the roadbed may serve as a toe path.
- Interfere with employees performing normal trackside duties.
- Prevent the proper functioning of signal and communication lines.
- Obstruct drainage in ditches and pipes.

6.2.2 Chemical Herbicides

Employees involved in handling and applying any vegetation control chemical must comply with all applicable safety requirements, regulations, and instructions. Use only chemical herbicides approved by the Chief Engineer.

6.2.3 Clearing for Sight Distances

Vegetation on railroad property that obstructs visibility must be removed for at least:

- 300 feet each way from public crossings {except Illinois (500 ft.), Wisconsin (330 ft.)} and private crossings that have the characteristics of a public crossing, refer to Figure 6-A.
- 50 feet or to property line, whichever is less {except Illinois (100 ft.), Texas (100 ft.)}, refer to Figure 6-A.
- 50 feet around buildings, stations, and platforms.
- 15 feet around all signs and signals when terrain and conditions allow.

NOTE: State or local regulations may require a greater area or distance for vegetation removal or control. See Standard Drawing No. 0025.

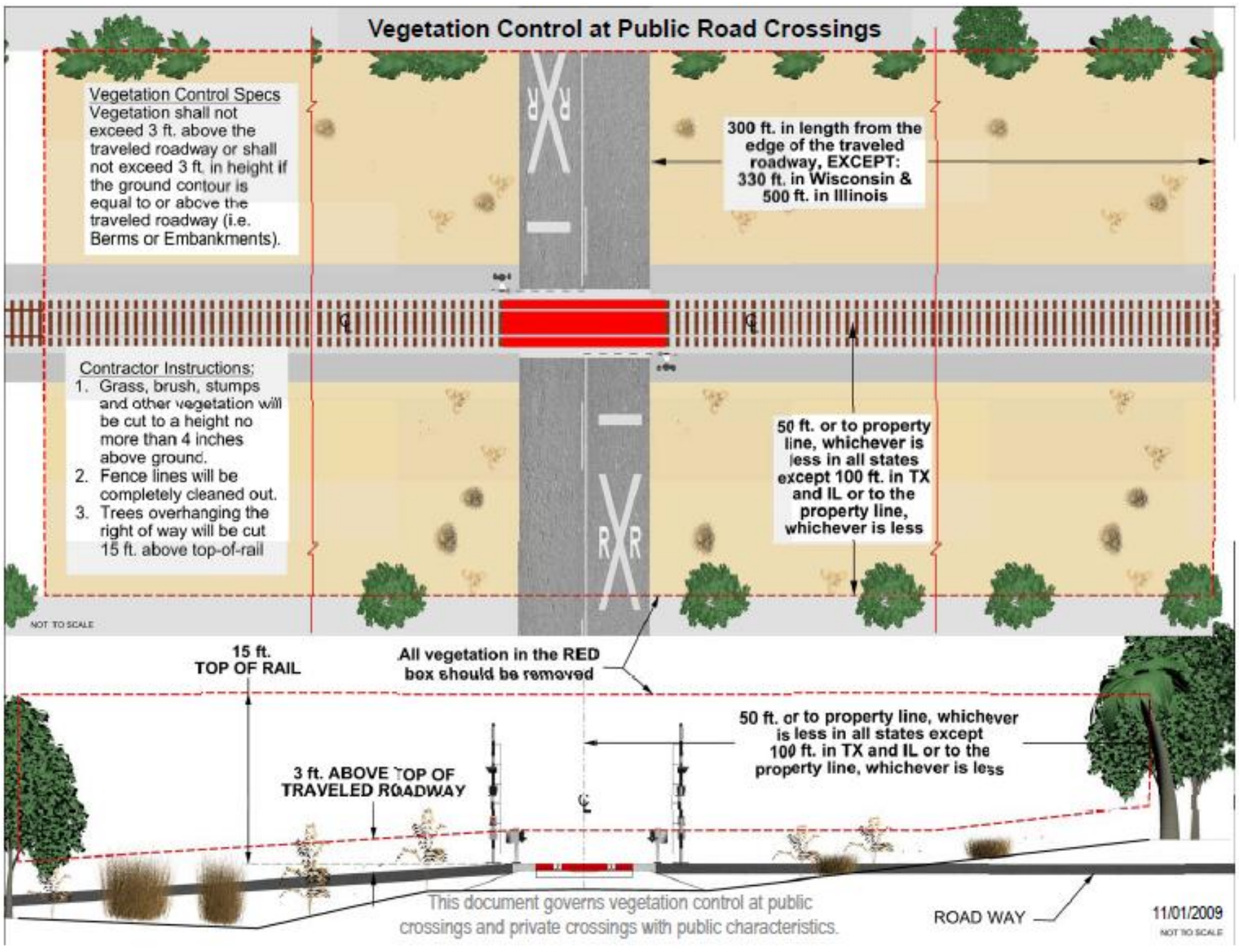

Figure 6-A

6.3 Fire Protection

Employees must make every effort to avoid starting and spreading fire along the right of way. Refer to the Engineering Website at Engineering>Bulletin Board>Fire Prevention Plan for complete copy of plan and associated requirements. The Fire Risk Assessment can be accessed on the UPRR Mobile Web. On a mobile device, enter www.up.com>Employee Mobile>MyUP>log in>Fire Risk.

6.4 Roadway Signs

Roadway signs are an important means to provide information to employees and others. They are a vital part of the safety of the railroad, providing instructions and visual reminders of warnings. They also serve as reference markers for structures and locations. As such, their use and maintenance should not be overlooked.

6.4.1 General

Employees must place and maintain roadway signs where required. Keep roadway signs erect, plumb, and legible. Replace all defaced signs as soon as practicable. Any deviation from the standards must have Vice President Engineering approval.

NOTE: Refer to Engineering Track Standard Drawing Nos. 0501 through 0599 for proper size and placement of all approved railroad signs.

6.4.2 Whistle Signs

Whistle signs are used to inform an engineer that that the train is approaching a road crossing. See Figure 6-B. Federal law requires the engineer to sound a whistle. These locations are designated in the time table or can be acquired from the local MIP.

Place whistle signs:

- 1,320 feet (1/4 mile) in both directions from the road crossing. This also applies to territories with directional traffic.
- Outside the track as viewed from an approaching train.
- No closer than 10 feet or farther than 15 feet from the nearest rail.

In multiple track territory where there is insufficient clearance between tracks, you may place whistle signs on the outside of the affected track. Refer to Standard Drawing No. 0555 for additional details.

Quiet Zone signs are used only at locations that have been legislated as a Quiet Zone. Refer to UPRR Standard Drawing No. 0556 for details.

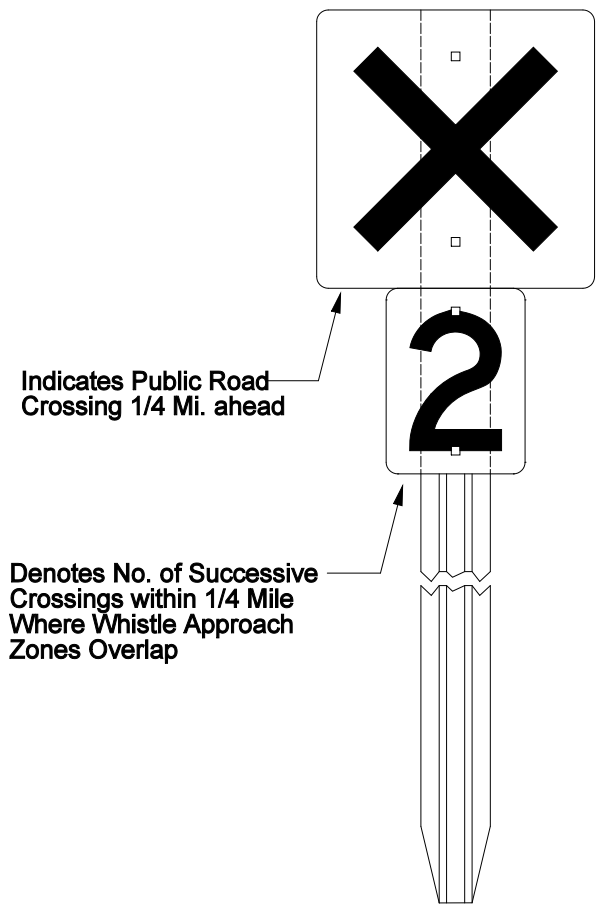

Figure 6-B

6.4.3 Standard Highway Crossing Signs (Crossbucks)

Standard highway crossing signs (crossbucks) must be placed on the right side of each approach of all public road crossings without signalized protection. In 2009 the Federal Highway Administration (FHWA) issued standards mandating the use of crossbucks with yield signs, at a minimum, to be placed at all passive public crossings (those without lights or lights and gates) by January 19, 2019. See Figure 6-C.

The placement of traffic signs other than crossbucks with yield signs (for example, stop signs) is determined by the public authority with responsibility for the roadway, or the state regulatory body, whichever is applicable. The initial installation of yield or stop signs at these crossings is negotiated by the Engineering Department's Industry and Public Projects Group. Union Pacific maintains / replaces these signs after they are installed.

Follow these requirements for installation and inspection:

- Refer to UPRR Standard Drawing No. 0529 for design and installation requirements for passive public crossing signage (crossbucks with yield sign, or crossbuck with stop sign).
- Contact your local Industry and Public Projects Manager for information regarding initial stop and yield sign initial installation status, including funding of materials, for your territory.
- Follow inspection requirements for crossing signs as detailed in M/W Rule 53.1.1 Road Crossing Condition.

Follow these requirements for replacement of existing signs:

- For installations where it can be determined that a yield or stop sign was previously installed but is now missing, replace with in-kind size and type of sign. It is imperative to refer to UPRR Standard Drawing No. 0529 prior to replacement of the existing sign.
- To determine the current sign type and standard for existing yield or stop sign installations for any particular at-grade crossing location(s), utilize the UPRR website: MyUP> Public Projects> Facility Reporting> DOT Road Crossing Reports> Summary List of DOT's.
- Contact your local Industry and Public Projects Manager if you have questions regarding installations at crossings that may be exceptions to standards. If local law enforcement or municipalities contact UPRR maintenance forces to request a change to the type of sign installed, contact your local Industry and Public Projects Manager for further handling.

Follow these requirements for placing crossbuck signs:

- Place signs 15 feet from the center line of the nearest track and 8 feet from the edge of the road.
- Maintain a height of 9 feet between the top of the highway surface and the center of the sign.
- Keep the sign face perpendicular to the center line of the highway.
- Refer to UPRR Standard Drawing No. 0529 for additional information.

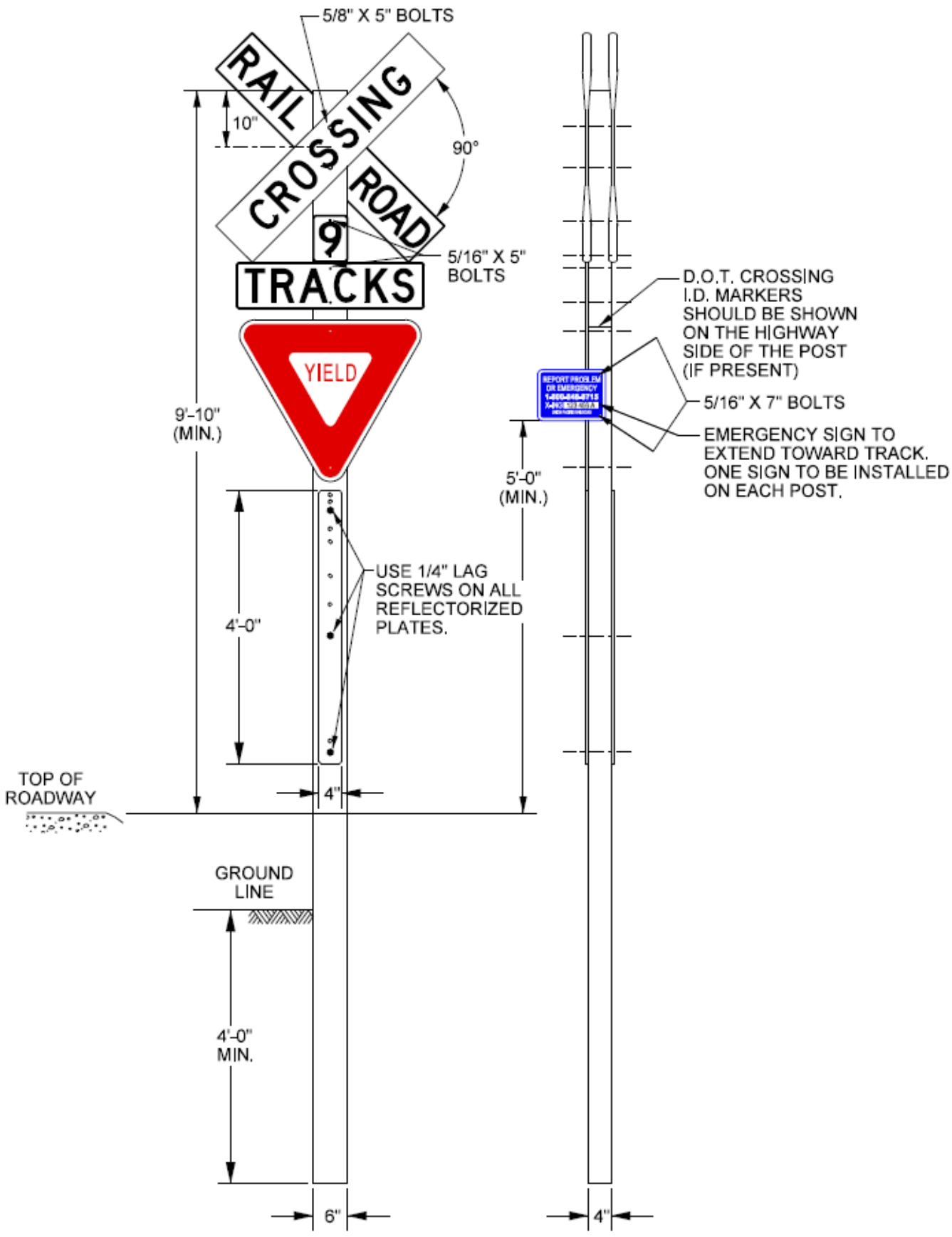

Typical Crossbuck

Figure 6-C

6.4.4 Clearance Warning Signs

Follow these requirements for mounting clearance warning signs:

- Use close or impaired clearance signs at locations with horizontal or vertical clearances that are less than standard.
- Mount close clearance signs at each end of the restricted track's entrance so they are clearly visible from the direction of approach.
- Mount close clearance signs on posts or structures.

See Standard Drawing No. 0513 for general placement details. Specific requirements for state or local ordinances may also be required on the sign face.

6.5 Roadways

Follow these requirements for maintaining right of way in these situations:

- Grade crossings.
- Right of way roads.

6.5.1 Grade Crossings

Follow these requirements for maintaining right of way access at road crossings.

A. General

To provide for safe train operation and safe condition of the highway travel crossing, give special attention to road crossing maintenance. Follow these general requirements:

1. Do not construct, install, widen, relocate, or remove any road crossing without the Chief Engineer's approval.
2. Construct all crossings according to UPRR Standard Drawing Nos. 0300-0399 and Standard Drawing Nos. 200100 to 209999.

3. Use concrete crossing panels on crossings constructed on concrete tie track.
4. Use concrete panels for public crossings when available.
5. Use prefabricated timber panels for private crossings outside concrete tie track.
6. Where a road crosses more than one track, keep the top of rail elevation on all tracks as even as practicable.
7. Maintain crossings to a smooth, even grade with no abrupt changes in slope or surface.
8. Before performing any work on a public road crossing that might require a road or lane closure or detour, contact the proper local, county, or state officials to obtain permission and any required permits.
9. When constructing or maintaining road crossings, remove all rail joints within the crossing limits. Keep rail joints at least 15 feet from the edge of the crossing.
10. Follow these requirements for maintaining flangeways:
    - Maintain the flangeway opening along the gage side of the running rail at no less than 3 inches.
    - Keep flangeways free of debris, gravel, ice, or other objects.

B. Crossing Warning Devices (Passive/Active)

Employees must immediately repair or replace all damaged or illegible signs. Report all damaged signalized crossing warning devices to the Signal Department hotline 1-800-848-8715.

Follow these requirements for maintaining crossing warning devices:

- Properly maintain crossbucks and whistle posts at all times.
- Keep the view clear in both directions for vehicles approaching the track. See Section 6.2.
- Work on or about highway crossings with the least possible inconvenience to highway traffic. Take care to protect all employees and the traveling public.
- Refer to M/W Rule 53.0 Road Crossings and Signs for additional requirements.

C. Crossing Drainage

Control the amount of water entering road crossings. Follow these requirements for controlling crossing drainage:

- Make sure the surface of the highway slopes away from the track where possible.
- Maintain approved culverts and ditches to allow water to flow without adversely affecting the track structure or roadway.
- Refer to Section 1.3.3 Grade Crossing Drainage for detailed information.

6.5.2 Right of Way Roads

Follow these requirements for controlling access to right of way roads:

1. Keep the gates controlling entrances to roads closed and locked, when not in use, to prevent unauthorized access.
2. Where access to right of way roads is not controlled, post “No Trespassing” signs according to UPRR Standard Drawing No. 0538.

6.6 Fencing

Follow these requirements for constructing and maintaining fencing:

1. When constructing new fencing be governed by UPRR Standard Drawing No. 0075.
2. When constructing right of way fence, place it on the boundary or property line of the railroad right of way unless otherwise directed.
3. Inspect and repair existing fence as required.
4. If tracks have been removed or train operations have been officially abandoned, you do not need to install or maintain fence along the right of way.

6.6.1 Livestock

Follow these requirements for livestock control:

1. Maintain cattle guards where required.
2. Keep gates closed when not in use.
3. Lead away any livestock found wandering on the right of way. Check the adjacent fence line for open gates or damage.
4. Dispose of livestock that have been killed on the right of way.
5. Call RMCC.

6.6.2 Snow

Follow these requirements for controlling snow:

1. Place snow fences at least 75 feet from the track at right angles to the direction of the prevailing wind. Where storms can be expected from either side of the track, erect

fences on both sides. Do not erect snow fences where they will obstruct the view or cause snow to accumulate at road crossings.

2. Keep drainage ditches and culverts clear of snow and ice so they can handle a large volume of water if a sudden thaw should occur.

6.7 Bridges and Culverts

The Track Department inspects and maintains culverts which are less than 48" in diameter. For square or rectangular culverts, the Track Department inspects and maintains culverts with a flow area of 4 sq ft or more and with a flow area less than 16 sq ft.

Follow these requirements for maintaining bridges and culverts:

- When replacing damaged culverts, use a replacement culvert of the same diameter or larger.
- When installing culverts, place the bottom of the culvert at the flow line.
- Ensure the cover thickness over the top of a culvert to the bottom of the tie is at least one-half the culvert diameter.
- Remove weeds, debris, and snow that hinder water flow through culverts.
- Promptly remove drift that accumulates around bridges. During high water, use a crane and clamshell bucket.

Refer to Engineering Standard Drawing Nos. 4000 to 4016 to determine which structures require inside guard rails. These drawings also show construction details.

6.7.1 Bridge Identification

The following illustrations Figure 6-D, Figure 6-E, and Figure 6-F show some basic bridge terminology.

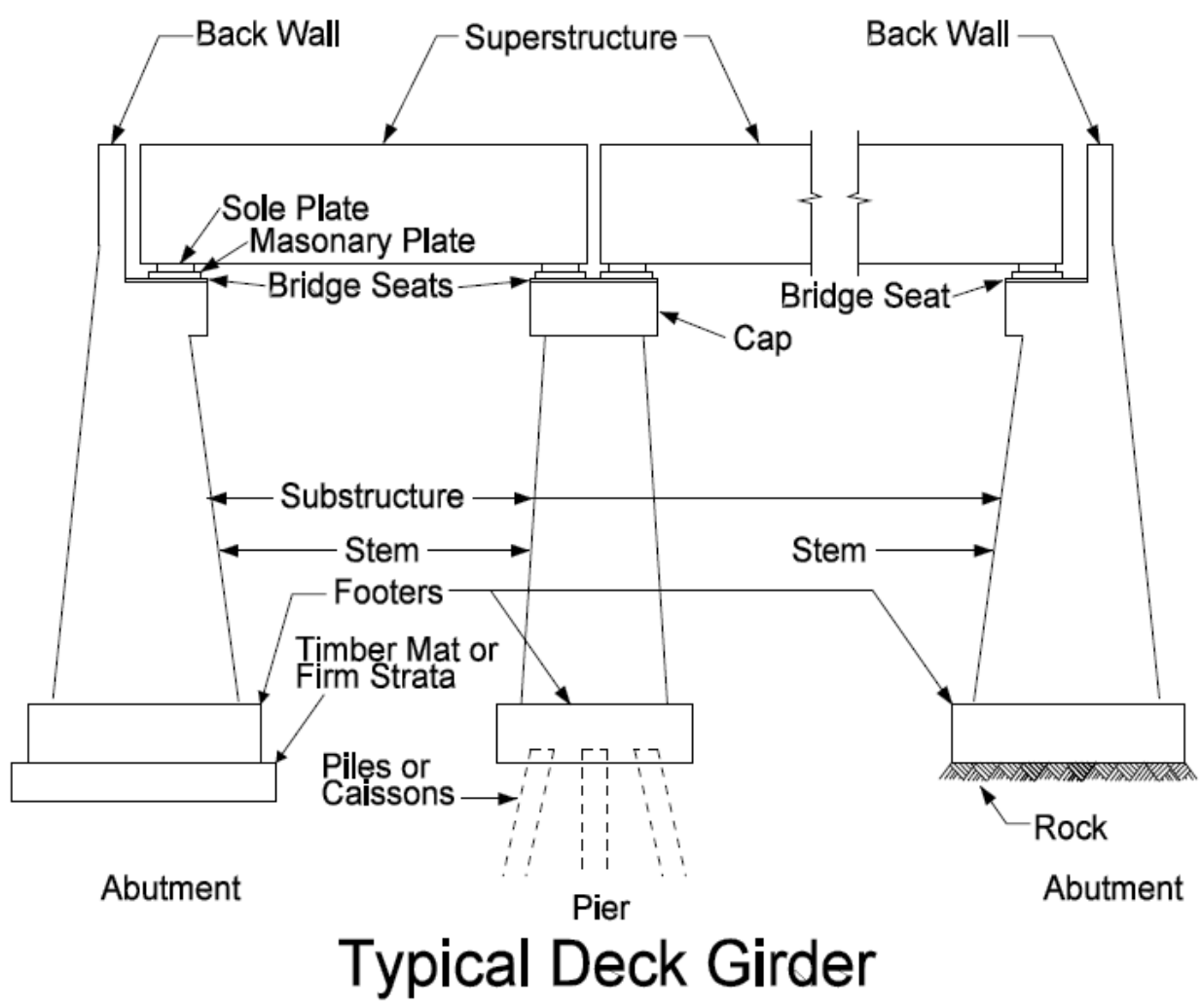

Figure 6-D

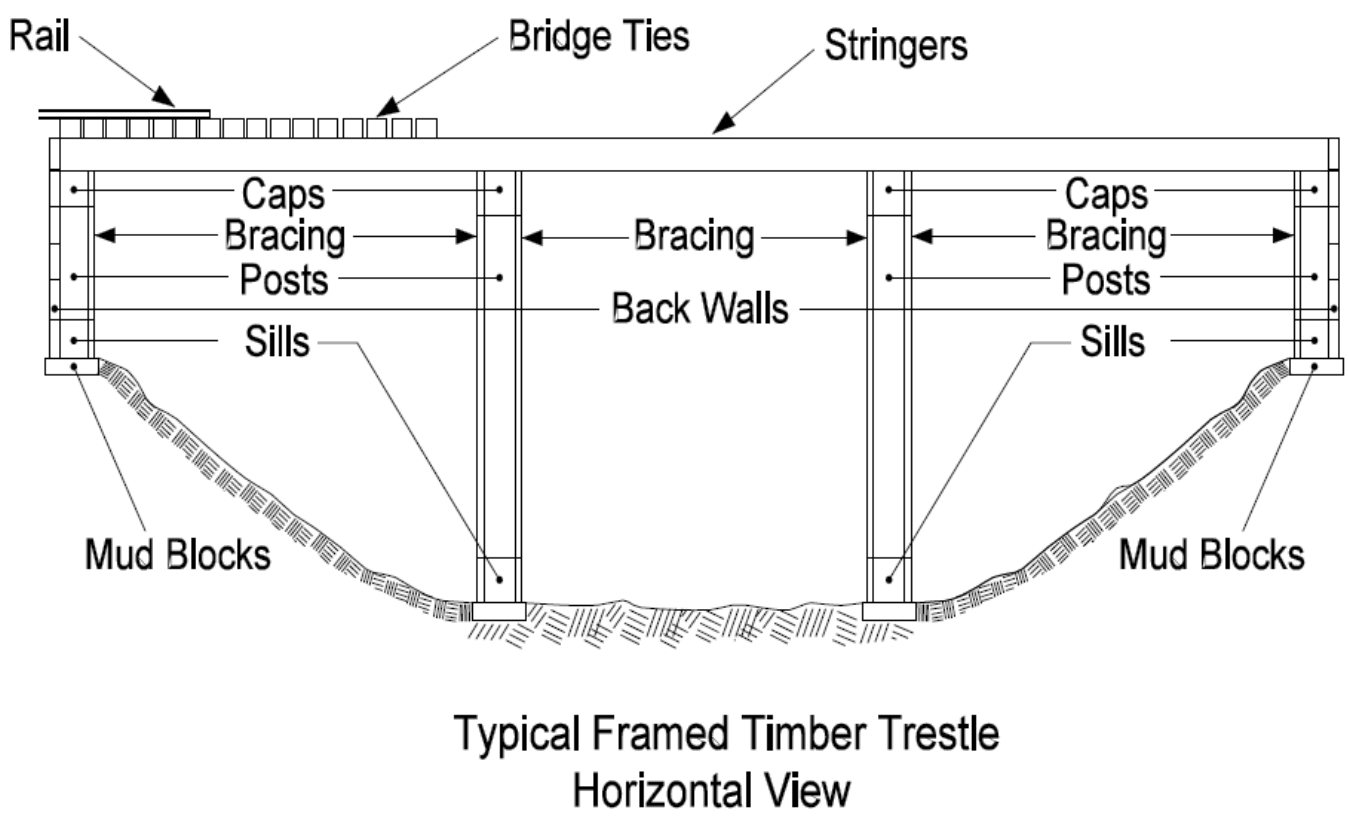

Figure 6-E

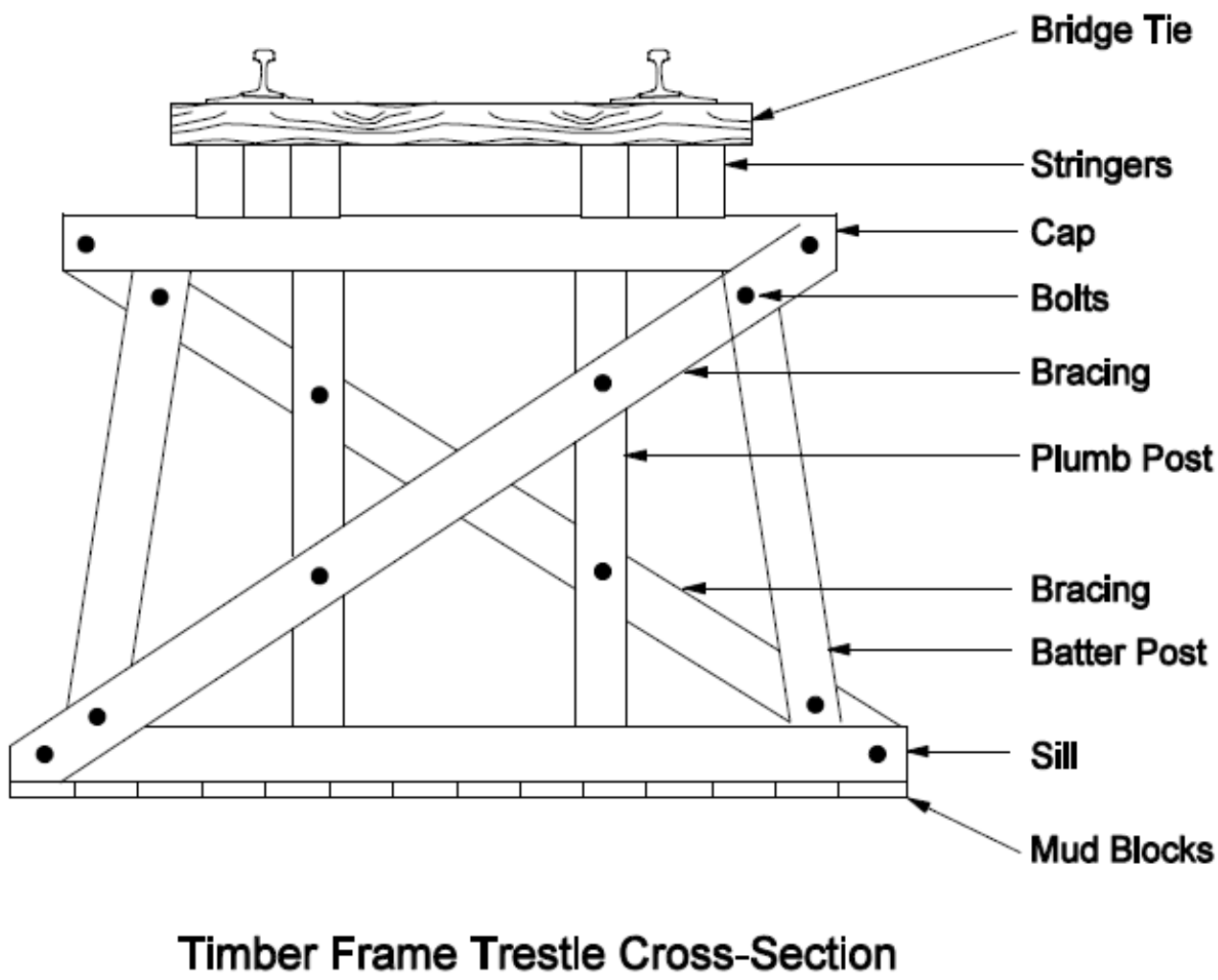

Figure 6-F

6.8 Environmental

Comply with all environmental laws and regulations:

- Obtain permits when site specific conditions warrant.
- This include storing, applying, and disposing of hazardous materials, fuels, oils, greases, glues, paints, and solvents.
- Handle material released from track in a responsible manner. Do not dispose of material in waterways or store it in an area where rain runoff might carry the material into the waterways.
- Do not bury ties or other hazardous waste material, or burn material of any kind (e.g., ties, trash, for warming, etc.), without written approval from the Superintendent level or above. Approval will not be granted unless you first obtain the necessary environmental and fire permits from state and local authorities.
- Comply with all fire permit provisions. A fire permit alone is not sufficient. Attend a fire until it is completely out.
- Direct questions about hazardous or contaminated material disposal and grading/dirt work affecting storm water run-off to the Environmental Engineering Group.

6.8.1 Hazardous Material and Waste Spills

NOTE: A hazardous material is any substance that can harm people, property, or the environment. This includes fuel oil and many chemicals used in operations. Refer to the Chemical Inventory and Material Safety Data Sheets (MSDS) for types, quantities, and other details.

Follow these requirements for handling hazardous material and waste spills:

1. Evaluate the situation. Determine the type of material spilled and the size of the spill. (Use the size, shape, and location of the container along with the chemical container labels and other placards.)
2. Call for assistance from other employees and your foreman, if necessary, before attempting control or containment.
3. Contact local authorities (fire or police) if their assistance is necessary.
4. Secure the area. Remove or shut in sources of ignition.
5. If you can do it safely, take action to stop or contain the spill. This may include operation shutdown systems and incidental containment activities.

NEVER PLACE YOURSELF AT RISK. ATTEMPT TO CONTAIN OR CONTROL ONLY THOSE MATERIALS FOR WHICH YOU HAVE BEEN TRAINED AND PROPERLY EQUIPPED. CONTAINMENT OR CLEANUP OF ANY SPILL THAT EXPOSES YOU TO A FIRE, EXPLOSION, OR HEALTH HAZARD SHOULD BE HANDLED BY TRAINED SPECIALISTS.

Incidental containment activities may include use of absorption, dilution, dikes, dams, booms, diversions, over-packing, plug and patch, or liquid transfer.

6.8.2 Illegal Dumping

While inspecting and maintaining track and ROW on and about UPRR property, employees need to be aware of activity by company forces or outside third parties that may damage assets. Such activity would include:

- Illegally dumping wastes or discharging wastewater onto UPRR property.
- Undocumented spills or hazardous materials release.
- Loading and unloading hazardous and environmentally sensitive materials on the ROW at facilities that do not have adequate clearances.

IF YOU DISCOVER SUSPICIOUS ITEMS OR OBSERVE SUSPICIOUS ACTIVITY, PLEASE NOTIFY THE UNION PACIFIC RISK MANAGEMENT COMMUNICATION CENTER AT 1-888-UPRR-COP (1-888-877-7267) OR COMPANY LINE 8-216-5641.

6.9 Fiber Optics

Follow these requirements:

- Know if the area you are working in contains fiber optic cable.
- Take necessary measures to avoid damaging cable. Protect it from damage by outside parties.

Signs posted along the right of way indicate the presence of fiber optic cable but not the precise location. The absence of a sign does not necessarily imply that no cable is present, nor does it relieve an employee of the responsibility of checking to see if cable is present.

If you are unsure about the presence of cable, call 1-800-336-9193 before digging. If cable is present, do not dig in the area until the cable location has been marked or it has been determined that the work will not endanger the cable.

Call Union Pacific's *Call Before You Dig* hotline (800-336-9193) to determine if there are any fiber optic cables or other utilities in the work area. Call SOC in a terminal to contact water services and electricians.

Each State has a one-call hotline that must also be contacted at least 48 hours before performing any work. Call the North American One Call Referral System (888-258-0808) to obtain the appropriate state one-call number. Call the state one-call center, who will notify all utility owners within the work area.

***Do not* begin excavation or construction along the railroad's right-of-way until all utilities in the work area have been located and protected by their owners.**

7.0 TRACK BUCKLING PREVENTION GUIDELINES

7.1 Causes of Track Buckling 7-3
7.1.1 Explanations and Terminology 7-3
7.1.2 Critical Parameters That Influence Track Buckling 7-4
7.1.3 Maintenance Activities and Conditions That Impact Track Buckles 7-4
A. Lowered Neutral Temperature 7-4
B. Addition of Rail and Field Welds 7-4
C. Loss of Longitudinal Resistance 7-4
D. Reduced Lateral Resistance 7-4
E. Maintenance on Curves 7-5
F. Surface and Alignment Deviations 7-5
G. Dynamic Train Forces 7-5
H. Poor Train Handling 7-6
7.1.4 Locations Where Track Buckles are Likely to Occur 7-6
7.1.5 Track Buckle Occurrences 7-6
7.2 Track Buckling Preventive Maintenance Schedule 7-7
7.3 Monitoring Temperature 7-8
7.3.1 Ambient Temperature 7-8
7.3.2 Rail Temperature 7-8
7.3.3 Relationship between Ambient Temperature and Rail Temperature 7-8
7.4 Inspecting the Track Structure 7-8
7.4.1 Where Rail Could Have Been Added 7-8
7.4.2 Where Major Track Work Has Been Performed 7-8
7.4.3 Fixed Track Structures 7-8
7.4.4 Where Trains Could Cause Longitudinal Rail Movement 7-8
7.4.5 Track Geometry Problems 7-8
7.4.6 Insufficient Anchors and Fasteners 7-9
7.4.7 Ballast Conditions 7-9
7.5 Inspecting for Tight Rail Conditions 7-9
7.5.1 Lateral Rail Movement 7-9
7.5.2 Vertical Rail Movement 7-9
7.5.3 Longitudinal Rail Movement 7-9
7.5.4 Rail Maintenance Problems 7-10
7.6 Extreme Weather CWR Inspections 7-10
7.6.1 Hot Weather Inspections 7-10
7.6.2 Cold Weather Inspections 7-10
7.7 Placing Blanket Heat Restrictions 7-11
7.7.1 Level 1 Heat Restrictions 7-11
7.7.2 Level 2 Heat Restrictions 7-11
7.7.3 Blanket Cold Weather Restrictions 7-11
7.7.4 Removal of Blanket Heat Restrictions 7-12
7.8 Placing Temporary Speed Restrictions Account of Track Work 7-12
7.8.1 General Requirements 7-12
7.8.2 Consolidation of Ballast 7-12
7.8.3 Responsibility for Placing Speed Restrictions 7-13
7.8.4 Multiple Maintenance Operations on Same Track 7-13
7.8.5 Special Air Brake and Train Handling Requirements 7-13
7.8.6 Speed Restriction Length for Disturbed Track 7-13
7.8.7 Rail Temperature Thresholds 7-13
7.8.8 Speed Restrictions for Track Panel Installations 7-14
7.8.9 Newly Constructed Track/Switches 7-14
A. Rail Temperature is Below or Forecasted Below the “Rail Temperature Required for Speed Restriction Behind Track Work” for the Subdivision . 7-14
B. Rail Temperature is At or Above the Forecasted “Rail Temperature Required for Speed Restriction Behind Track Work” for the Subdivision 7-14
7.8.10 Undercut, Sledded or Plowed Track 7-14
A. Rail Temperature is Below or Forecasted Below the “Rail Temperature Required for Speed Restriction Behind Track Work” for the Subdivision . 7-14
B. Rail Temperature is At, Above or Forecasted Above the “Rail Temperature Required for Speed Restriction Behind Track Work” for the Subdivision . 7-14
7.8.11 Tie and Surfacing Operations with Tie Installation 7-15
A. Rail Temperature is Below or Forecasted Below the “Rail Temperature Required for Speed Restriction Behind Track Work” for the Subdivision . 7-15
B. Rail Temperature is At or Above the Forecasted “Rail Temperature Required for Speed Restriction Behind Track Work” for the Subdivision 7-15
C. Hot Weather Instructions for System Tie Gangs 7-15

D. General Instructions for System Tie Gangs 7-15
E. Pull Safe Requirements for Tie Gangs 7-16
7.8.12 Track Consolidation with Track Stabilizers 7-17
7.8.13 Rail Relays 7-17
7.8.14 Maintenance Surfacing 7-17
7.8.15 Ordinary Maintenance 7-17
General Requirements 7-17
A. Rail Temperature is Below or Forecasted Below the "Rail Temperature Required for Speed Restriction Behind Track Work" for the Subdivision . 7-17
B. Rail Temperature is At or Above the Forecasted "Rail Temperature Required for Speed Restriction Behind Track Work" for the Subdivision 7-18
7.8.16 Summary of Speed Restrictions for Track Work 7-19
7.8.17 Slow Order Codes 7-20

7.9 Track Buckling Preventive Maintenance 7-20
7.9.1 Managing CWR Events 7-21
7.9.2 Placing Reference Marks 7-22
7.9.3 Placing Spanning Reference Marks 7-22
7.9.4 Placing Pull Back Reference Marks 7-23
7.9.5 Maintaining Desired Rail Neutral Temperature Range 7-24
7.9.6 Rail Neutral Temperature Re-adjustment 7-24
7.9.7 Cold Weather Rail Neutral Temperature Readjustment 7-25
7.9.8 De-Stressing Rail 7-26
7.9.9 Managing Cut-in/Cut-out CWR 7-26
7.9.10 Monitoring Curve Movement 7-27
A. Surveyors 7-27
B. System Gangs 7-27
C. Maintenance Forces 7-27
D. Procedures to Place Maintenance Stakes around Curves 7-28
E. Non Pre-staked Curves and Cold Weather 7-288
7.9.11 Inspecting for Curve Movement 7-288
7.9.12 Adjusting Curve or Placing Speed Restriction Account of Curve Movement .. 7-288
7.9.13 De-stressing Curves 7-29
7.9.14 Adjusting Anchors 7-300
7.9.15 Eliminating Joints 7-300
7.9.16 Gauging Track 7-300

7.10 Reporting Track Buckling Activities 7-300
7.10.1 Reporting Maintenance Work in CWR 7-300
7.10.2 Report Rail Service Failed Broken Rail 7-300
A. Service Failure Broken Rail Reporting 7-300
B. Broken Rail Derailment Reporting 7-311
7.10.3 Report Rail Pull-aparts 7-311
7.10.4 Report Maintenance Rail Replacement 7-311
7.10.5 Report Cut-in/Cut-out Maintenance Rail 7-31
7.10.6 Welding Gangs 7-31
7.10.7 Report Curve Movement 7-32
7.10.8 Reporting Track Buckling Incidents 7-32
7.10.9 Required CWR Documentation 7-32
7.10.10 Rail Laying Temperature for Continuous Welded Rail Table and Blanket Speed Restrictions 7-33

7.0 Track Buckling Prevention Guidelines

7.1 Causes of Track Buckling

A track buckle is a lateral misalignment caused by one or more of the following:

- High compressive forces in the rail resulting from thermal and mechanical loads or reduced neutral temperature.
- A weakened track structure due to reduced track resistance and alignment defects.
- Dynamic loading of trains, such as dynamic uplift, high axle loads (lateral/vertical), braking, and traction loads.

A track buckle occurs when the track structure can no longer resist the compressive forces that have built up. The buckle is a relief of the built up forces.

7.1.1 Explanations and Terminology

CWR Joint means any joint directly connected to CWR.

Compressive Forces push toward each other. They tend to squeeze or compress an object.

Tensile Forces pull away from each other. These forces tend to stretch an object.

Thermal Expansion of Rail occurs when a 1,440 foot section of continuous welded rail (CWR) is expanded in length by approximately 9/16 inch for every five-degree (Fahrenheit) increase in temperature. (0.0000067 inch, per inch of rail, for every degree Fahrenheit.)

- Example: A 1,440 foot string of rail was laid at 60 degrees Fahrenheit. The rail was not anchored or restrained at either end. If the rail temperature is increased to 120 degrees Fahrenheit, the rail will expand approximately 6.95 inches in length.

Neutral Temperature is the temperature at which there are no longitudinal forces in the rail. The rail is said to be in a state of equilibrium or balance, which means there are no pushing or pulling (compressive or tensile) forces. The neutral temperature is equal to the installation temperature, at which the CWR is laid and anchored, if no other rail related activities have occurred.

Longitudinal Forces are compressive or tensile forces affecting the length of the rail.

Dynamic Loading of Trains is the force that is applied to the track structure from wheel and axle loads, braking, acceleration, rocking, truck hunting, flat spots on wheels, and slack action.

Critical Buckling Temperature is the point at which the track buckles without any outside forces. When outside forces are applied, the critical buckling temperature is lowered.

Installation Temperature is the temperature at which the CWR was laid and anchored. It is a key component in understanding the dynamics of track buckling. This is the initial neutral temperature.

Note: UPRR installs CWR at fairly high neutral temperatures. In areas where the ambient temperature is in the lower ranges, the installation temperature is controlled to reduce the risk of pull-apart. A rule-of-thumb is that the neutral temperature should be 40-45 degrees Fahrenheit above the annual mean temperature for the area.

Lateral Resistance is the reaction that is presented by the ballast to prevent lateral movement from the rail and ties. As the compressive forces in the rail increase the track structure has a tendency to push outward. The ties and ballast resist this outward movement. This is a key parameter in providing lateral strength and stability for buckling prevention. Figure 7-A shows how the ballast resists lateral movement of the track structure.

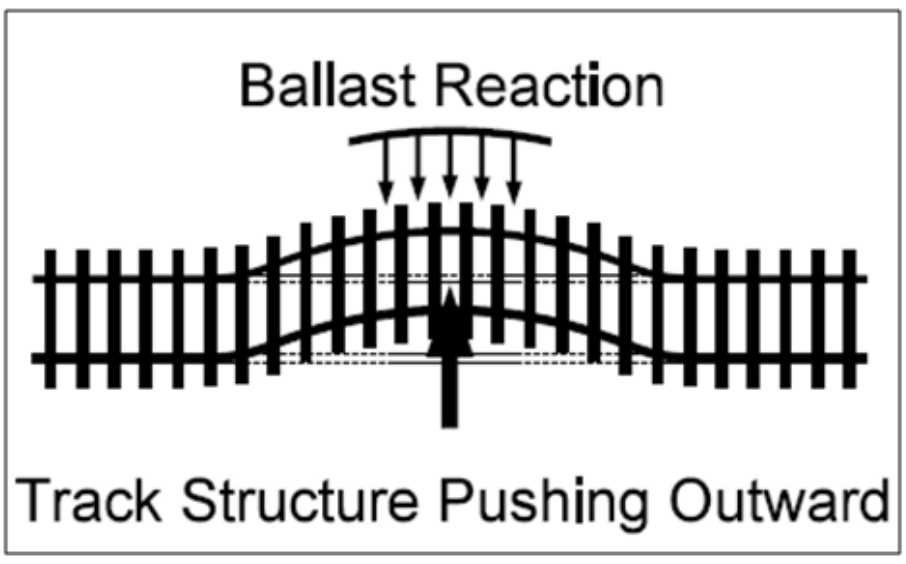

Figure 7-A

Three components make up the lateral resistance of the track structure: friction between the bottom of the tie and the ballast, friction between the side of the tie and the ballast in the crib, and the interaction between the end of the tie and the ballast on the shoulder. See Figure 7-B.

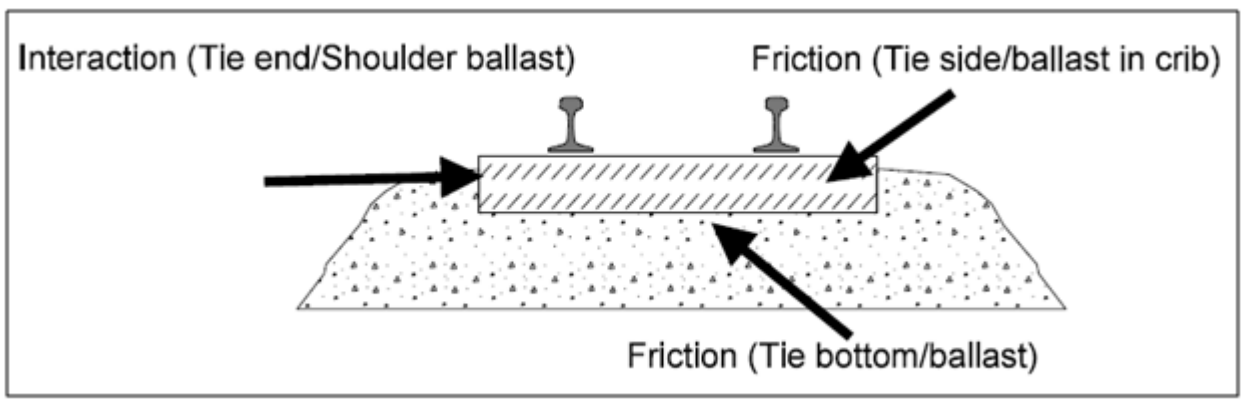

Figure 7-B

For wood ties, the percentage of contribution is: bottom of tie (40%), side of tie (35%) and end of tie (25%). For concrete ties, the percentage of contribution is: bottom of tie (40%), side of tie (30%) and end of tie (30%).

The resistance that the ties and the ballast provide help to keep the rail from moving laterally. The amount of resistance that the ties provide depends on the spacing, dimensions, mass, and geometry. The ballast resistance depends on the type and size of the tie and the profile, density, and consolidation of the ballast.

Lateral Strength is what holds the track structure in place and prevents it from moving laterally.

7.1.2 Critical Parameters That Influence Track Buckling

The critical parameters that influence track buckling are:

- Variation in the rail neutral temperature, which equates to the longitudinal force in the rail. When the rail's neutral temperature is reduced, the longitudinal force in the rail increases causing a reduction in the track's buckling temperature.
- Lateral resistance of the track. The lateral resistance is reduced after the track structure has been disturbed.
- Lateral track alignment deviations.
- Train dynamic loading and dynamic uplift.
- Curvature.

7.1.3 Maintenance Activities and Conditions That Impact Track Buckles

Controlling neutral temperature is a critical component in the maintenance process. There are a number of maintenance processes that are performed that can impact the neutral temperature and set up a condition that is prone to a buckle. Maintenance activities and conditions that impact buckles are:

A. Lowered Neutral Temperature

When maintenance is performed on the track and more rail is added than was taken out, the rail's neutral temperature is lowered. If this reduction in neutral temperature reaches the critical buckling point, where the track structure can no longer resist the stress created by elevated temperatures and train induced forces, the track will buckle.

The rail's neutral temperature is variable, not constant; it can change as conditions change. Maintenance practices can, and do, have an impact on the neutral temperature; this has to be understood when performing maintenance work.

A change in neutral temperature is the same as changing the longitudinal force in the rail. A 40° F to 60° F change in the rail's neutral temperature will change the force in the rail by about 100,000 pounds. A downward shift in neutral temperature from 100° F to 60° F, could lead to a track buckle. If the neutral temperature was increased from 100° F to 130° F, this could have the negative impact of pulling rail apart or a curve chording inward during the winter months.

Field measurements have identified neutral temperature shifts between 30° F and 40° F below the desired rail laying temperature. The problem starts when the neutral temperature of the rail is lower than the desired neutral temperature for the area. The track becomes unstable once the difference between the actual neutral and the desired temperature for the area reaches the critical buckling temperature. The critical buckling temperature would be approximately a difference of 60° F to 80° F between the neutral temperature and the rail temperature.

B. Addition of Rail and Field Welds

Rail can be added without actually installing more rail. When work is performed to correct surface or line deviations, the rail will straighten out and can grow in length. There may be too much rail in the track. This increase in length decreases the neutral temperature.

The most obvious example of when rail can be added in the normal maintenance process is when service failures, detector car failures, or pull-aparts are repaired. If more rail is put back into the track, than was taken out, the neutral temperature is decreased.

When field welds are made during cold weather and no allowance has been made for rail contraction, additional rail is added. The excess rail could decrease the neutral temperature below the desired level.

The longitudinal forces, on a piece of rail, are generally unknown. When making repairs, rail should not be added. If rail is added, it must be removed in the spring.

C. Loss of Longitudinal Resistance

If the rail is allowed to move through the rail anchors or fasteners or the ties are shoving the ballast, there is a reduction in the rail's neutral temperature. At the location where the rail stops moving longitudinally, there is a buildup in compressive forces. Some of the locations that are susceptible to longitudinal rail movement are: at the bottom of a vertical curve on heavy grades, bottom of heavy grades with directional traffic, horizontal curves, turnouts, bridges, railroad crossings, and highway crossings.

D. Reduced Lateral Resistance

The lateral resistance is what helps hold the track structure in place. When the rail is in compression, the track tries to push outward. If ties and ballast are disturbed, the lateral resistance is reduced. This develops a weak spot in the track. As the forces increase in the

rail, the track structure looks for a location to relieve the stress that has built up and the weak spot is vulnerable to a buckle.

Testing on U.P. has found that tamping and surfacing reduces the track's lateral resistance by 50%.

In locations that do not have enough shoulder ballast on the inside of the curve, the rail can shift inward due to the high tensile forces caused by cold temperatures. This location may have been at the desired neutral temperature before the rail is chorded in, but now the neutral temperature would be lower because the rail required for the curve is less.

E. Maintenance on Curves

When maintenance is performed on a curve and it disturbs the lateral and longitudinal resistance of the track, the track could shift inward during low temperatures. This happens before the track is fully compacted. This inward shift lowers the neutral temperature and reduces the lateral resistance. As the curve is lined in, less rail is required between the point of the curve and the point of the tangent, thus creating excess rail. The result of this lowers the rail's neutral temperature.

Anytime curves are surfaced or lined during cold temperatures and the curve is thrown inward more than outward, this sets up a potential for a buckle to occur. This imbalance in the throws will lower the neutral temperature. If curves are lined during high temperatures, the curve wants to move outward. Once the temperature gets colder, the tensile forces pull the curve inward, lowering the neutral temperature.

Track consolidation helps control curve movement but does not eliminate it. Curves must be closely monitored in extreme cold and heat for movement.

The following chart provides a rule-of-thumb value for neutral temperature (T_N) change. If the degree of curvature is known and how much the curve was moved or displaced (□), then it can be used to identify the change in neutral temperature. See Figure 7-C.

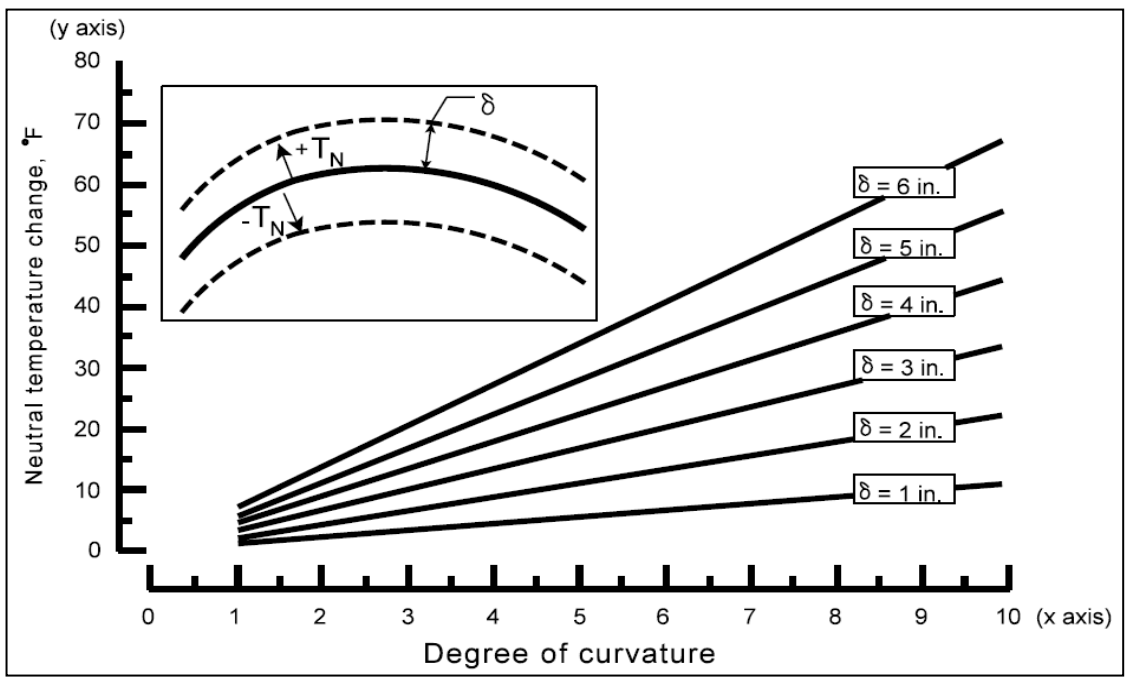

Figure 7-C

Here is an example of how to use this chart. A 6° curve with a 3" displacement would have approximately 20° F change in the neutral temperature. If the displacement was inward, then there would have been a decrease in neutral temperature. Find the degree of curvature on the X-axis and at a 90 degree angle from the 6° curvature move up to the line where it intersects with 3" displacement. Move horizontally to the left from this point to the Neutral Temperature Change on the Y-axis and this gives the neutral temperature change of 20° F. degrees.

F. Surface and Alignment Deviations

Buckles are more likely to occur in track with poor surface and alignment, than in track with good surface and alignment. Minor surface and alignment defects coupled with lowered neutral temperatures can lead to progressive buckling (a more gradual lateral displacement), particularly in sharp curves and in areas where the rail is corrugated, or has badly chipped joints or engine burns.

G. Dynamic Train Forces

Dynamic forces significantly increase the potential for track buckling. This instability is due to the uplift of the track in front of the train, between the front and rear trucks of a car (the "central bending wave character" of the rail), and the rear of the train. In the uplift area, the lateral resistance is reduced. This magnifies the importance of the lateral resistance between the shoulder ballast and the end of the tie. Illustrated in Figure 7-D.

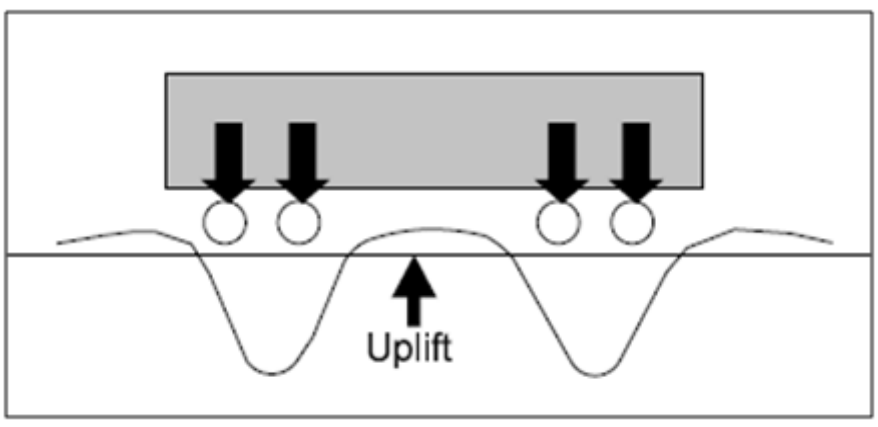

Figure 7-D

Imperfections in the track structure combined with the influence of repeated heavy wheel impacts on the rail produce higher lateral forces. As trains continue to encounter the imperfection, the size will increase. The lateral forces increase as the imperfection increases in size. This situation reduces the lateral resistance of the track.

Locomotives and heavy trains also can contribute to track buckling by pushing and pulling the rail, especially in heavy traction areas or on grades. If the rail is in compression, this can increase compressive stresses. This will lower the rail's neutral temperature. The end result is there will be a reduction in the resistance.

When a train is operating on a segment of track that is near the critical buckling temperature, the added forces that are generated through braking and the heating that is caused by the interaction between the wheel and rail can induce a buckle.

H. Poor Train Handling

Poor train handling contributes to many track buckles. Dynamic, independent, and automatic braking action of a train changes the longitudinal forces in the track and can cause significant shifts in the rail's neutral temperature. If the lateral resistance no longer can resist the longitudinal forces in the rail, the track will buckle. Slack adjustments in the train can produce extremely high lateral forces on the rail.

7.1.4 Locations Where Track Buckles are Likely to Occur

From a maintenance perspective, it is important to understand where track buckles are likely to occur. Table 7-A provides these locations and a description of why these are critical.

Locations where	Description
Lateral resistance has been reduced	Ballast and ties combine to hold the track in place. Maintenance activities such as tie renewals, undercutting, and/or surface and lining can reduce the lateral resistance by at least 50 percent.
Longitudinal holding power has been reduced	Rail has a tendency to bunch when anchors are missing or when an insufficient number of anchors are present or the fastening system is not restraining the rail from movement.
Rail has been added	Rail may be added when repairing service failures, rail defects, or pull-aparts.
Poor surface and alignment conditions are present	Poor surface and alignment conditions reduce lateral resistance.
Under loaded trains	A high percentage of track buckles occur under the rear half a train. Improper train handling where track work was recently performed greatly increases the probability of a track buckle especially on grades or curves.
Curves	Curves are more prone to a track buckle. Analysis of track buckle derailments indicate that there are more incidents that occur on tangent track, but if the data is normalized for the miles of tangent track versus the miles of curves, there are 2.6 times the frequency of derailments on curves versus tangent track. This is attributed to the curvature effects, the imperfection sensitivity that curves have and the dynamic forces that a train has on the curves as it negotiates around the curves.

Table 7-A

7.1.5 Track Buckle Occurrences

From a maintenance perspective it is important to understand when track buckles occur. An eleven year study (between 1995 and 2006) of track buckle derailments provides useful information. These charts are representative of the entire Union Pacific Railroad and not to a specific geographic area.

- The following chart indicates that the months of June, July and August had 75% of the track buckle caused derailment incidents, which are the hottest part of the year. July had the highest number of incidents in the month, which accounted for 36% of the derailments. See Table 7-B.

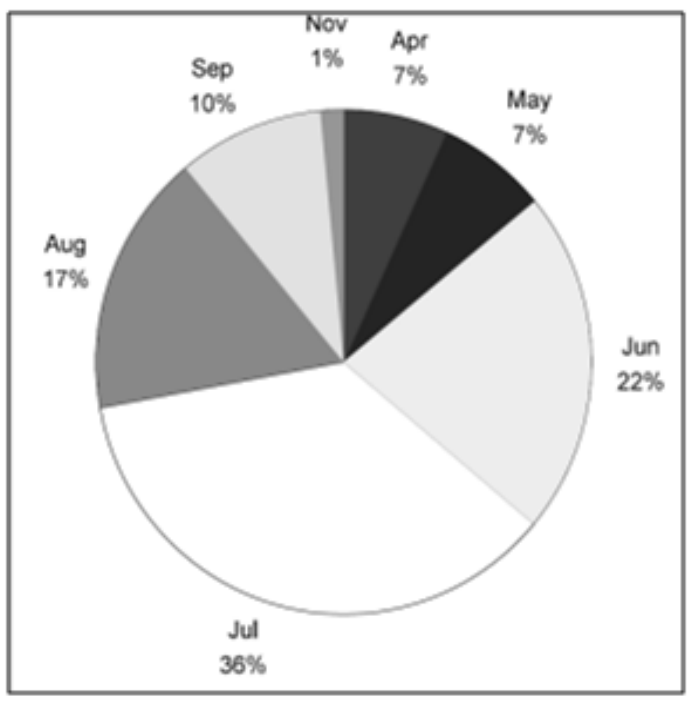

Table 7-B

- The majority of track buckles occur on hot sunny afternoons, usually between 2 P.M. and 6 P.M. when there are large variances between daytime high temperatures and nighttime low temperatures. The following chart indicates that 88% of the derailments that occurred were between 2:00 P.M. and 6:00 P.M. The highest percentage of derailments occurred between 3 PM and 4 PM. See Table 7-C.

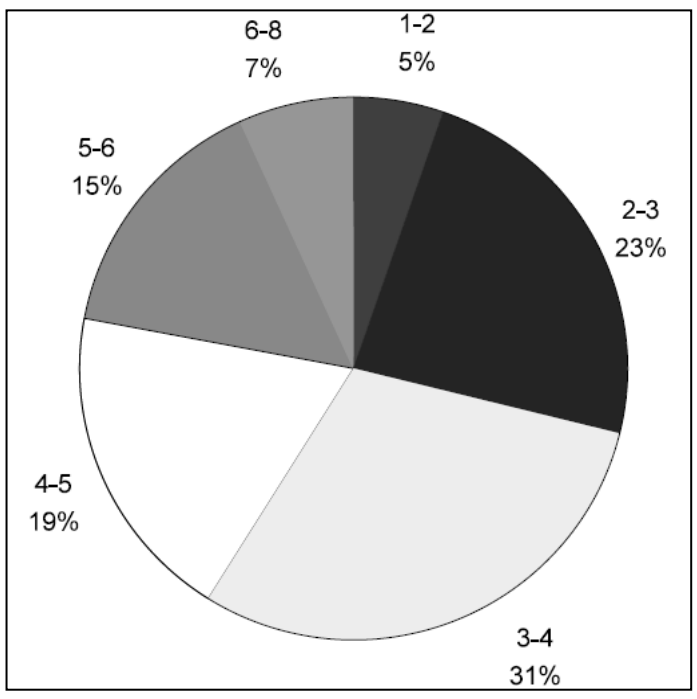

Table 7-C

- From an ambient temperature perspective, the following chart indicates that 49% of the derailments occurred in the 90° F – 100° F temperature range. Another 26% occurred when temperatures were greater than or equal to 100° F. See Table 7-D.

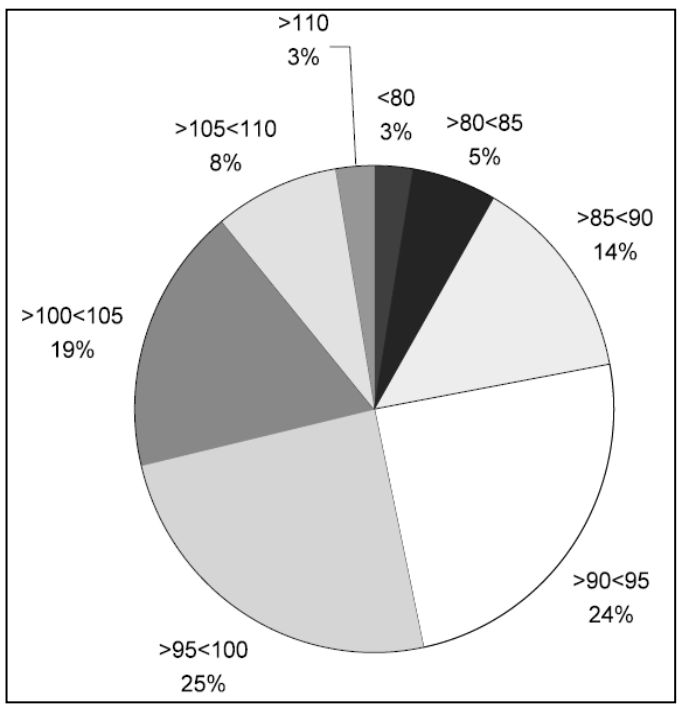

Table 7-D

7.2 Track Buckling Preventive Maintenance Schedule

Track Buckling Prevention is an on-going process. Performing track buckling preventive maintenance throughout the year can reduce the risk of track buckles. Track buckling prevention is achieved through more effective management of CWR. Here in Table 7-E is a Track Buckling Preventive Maintenance Schedule that provides activities and the recommended time of the year these activities should be performed.

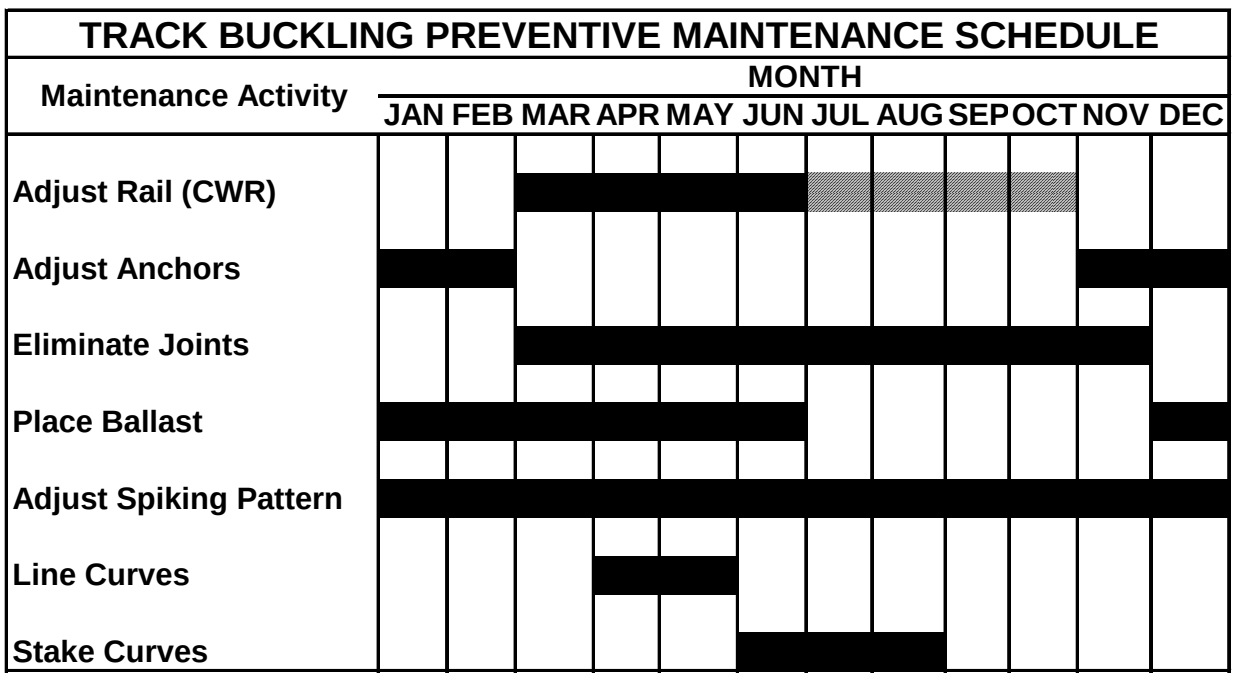

Table 7-E

1. Adjust Rail (CWR) - Remove excess rail from March through June. In the months of July through October, remove excess rail when maintenance work requires the adjustment.
2. Adjust Anchors - Maintaining a standard anchor pattern is important. This provides the resistance necessary to keep the track from moving longitudinally. In locations where the standard pattern is not enough, additional anchors should be applied. The best time to perform this work is when the rail is in tension.
3. Eliminate Joints - Eliminating joints helps reduce the risk of pull-aparts in the winter months. When making welds make sure to adjust for the length of the field weld prior to welding the joint, so no rail is added.
4. Place Ballast (Shoulders Cribs) - A full ballast section is required to provide the lateral resistance necessary to hold the track in place. Optimize the January through May time period and November through December time- frame for placing ballast to address maintenance requirements. Once the production season starts up, the project work will use the majority of the ballast cars.

5. Adjust Spiking Pattern - Adjustment of the spiking pattern can be done throughout the year. The standard spiking pattern helps resist the lateral forces.
6. Line Out Curves - Line out any curve that has inward movement of 2 inches or more prior to rail temperatures above or forecasted above the designated rail laying temperature.
7. Stake Curves - In warm weather curves move outward to relieve the high compressive forces, which makes the warm months an excellent time to stake these mainline curves. Classes 3 through 6 mainline curves are required to be staked in July and August.

Note: Curve staking must also be done in conjunction with cold temperature surfacing/lining in line with Sections 7.9.6, 7.9.10 and 7.9.11.

7.3 Monitoring Temperature

Ambient (air) and rail temperatures should be known when inspecting track and making rail adjustments.

7.3.1 Ambient Temperature

When the possibility of higher temperatures exists special planning must be made in order to ensure proper protection of track. The weather forecast must be monitored daily so appropriate slow orders can be placed with the dispatcher. Listen for weather and temperature forecasts using local or company radios.

7.3.2 Rail Temperature

Recording the rail temperature is important when installing and adjusting rail. Place a rail thermometer on the shady side of the web of the rail. Leave thermometer in place for five minutes before recording temperature. Infrared devices can also be used.

7.3.3 Relationship between Ambient Temperature and Rail Temperature

On a sunny day, the rail temperature will be approximately 30 degrees Fahrenheit higher than the ambient temperature. An ambient temperature of 80 degrees Fahrenheit on a sunny day generally correlates to a rail temperature of approximately 110 degrees Fahrenheit. On cloudy days the rail temperature will be approximately 15 degrees Fahrenheit higher than the ambient temperature. For example if the ambient temperature is 100 degrees Fahrenheit and it is cloudy, the rail temperature would be approximately 115 degrees Fahrenheit.

7.4 Inspecting the Track Structure

Physical inspection of the track structure is a key element of preventing track buckles. This is done in an effort to locate conditions where track buckles could occur and perform the necessary corrective action before they can become a problem. Listed below are areas that require a close inspection:

7.4.1 Where Rail Could Have Been Added

Inspect locations where rail may have been added due to repair of service failures, rail defects, pull-aparts, or where field welding has occurred, particularly in cold weather.

7.4.2 Where Major Track Work Has Been Performed

Inspect locations where track maintenance work, such as tie and rail renewals, undercutting, sledding, plowing, or surfacing and lining was recently performed. Other locations that need to be considered are newly constructed track, derailment sites and washout areas.

7.4.3 Fixed Track Structures

Inspect fixed structure locations, such as highway road crossings, railroad crossings, turnouts, bridges, and platforms where rail may bunch.

7.4.4 Where Trains Could Cause Longitudinal Rail Movement

Inspect locations where the braking action of trains can change the longitudinal forces in the track. Areas include the following:

- On grades, the bottom of grades and vertical curves.
- In advance of speed restrictions.
- Horizontal curves; paying special attention to high degree curves.
- Where train traffic is predominately one direction.
- Fixed track structures as noted in Section 7.4.3.

7.4.5 Track Geometry Problems

When inspecting for substandard track geometry look for the following:

- Track surface deviation.
- Deviations in the super-elevation of the curve.
- Cross-level deviations at joint locations.
- Weakness in sub-grade that may cause a surface deviation.
- Deviations in track alignment.
- Misalignments resulting from curve shifting.

Note: Use care when inspecting curves for line defects. Because the buckle is usually in a C shape, a small buckle in a curve can go unnoticed.

7.4.6 Insufficient Anchors and Fasteners

When inspecting for insufficient anchors and fasteners look for:

- Lack of standard box anchoring for 195 feet in both directions at turnout locations.
- Missing or inadequate anchors at joint locations.
- Lack of a standard anchor pattern on bridges.
- Rail moving through anchors or fasteners (shiny mark).

7.4.7 Ballast Conditions

For wood and composite ties, the standard CWR ballast section is a 12-inch shoulder beyond the end of a tie with a three-to-one slope. A three-to-one (3:1) slope is defined as three feet of horizontal distance for each foot (12 inches) of drop.

For concrete ties, the standard ballast section provides a 12-inch shoulder with a 3:1 slope.

When inspecting the ballast section look for the following:

- Empty ballast cribs.
- Insufficient ballast on the shoulders.
- Fouled ballast.
- Signs of freshly disturbed track. This could also mean that someone has been working at that location.

7.5 Inspecting for Tight Rail Conditions

7.5.1 Lateral Rail Movement

Definition: Lateral movement occurs when rail moves from side to side. When looking down the track, it resembles a snake.

When inspecting for lateral movement look for the following:

- Nervous or kinky rail.
- Clusters of defective ties.
- Voids between the ballast section and the end of the tie.
- Rail touching the opposite corners on the shoulder of the plates.

7.5.2 Vertical Rail Movement

Definition: Vertical movement occurs when the rail moves up or down.

When inspecting for vertical movement look for the following:

- Track appearing to have vertical humps.
- Ties that have pulled up out of the ballast.
- Clusters of high spikes.
- Rail lifting out of the plates.
- Rail that is canted either inward or outward.
- Indications that the rail was moving up and down.

7.5.3 Longitudinal Rail Movement

When the rail is in compression and allowed to move unrestrained longitudinally, the rail can bunch at fixed locations.

When inspecting for longitudinal movement look for the following:

- Ballast bunching on one side of the tie.

  Note: This indicates that the ties are moving with the rail and pushing the ballast. A ridge of ballast forms ahead of one side of the tie and leaves a void on the other.

- Skewed ties (one end of the tie moves).
- Anchors that are not tight against the tie.

  Note: This indicates that the anchors have lost their holding strength and are moving with the rail.

- Shiny marks on the base of the rail.

  Note: These marks are made from the spike heads, anchors or insulator/clips scraping the rail.

- Frogs that appear to be out of line or there is tight gage.
- Improper fit of the switch point to the stock rail.
- Switch rods are binding on the head block ties.

7.5.4 Rail Maintenance Problems

Inspect for corrugated, battered, or engine-burned rail. The presence of these increases the dynamic loading on the track. Sharp curves are especially vulnerable.

When inspecting for rail maintenance problems look for the following:

- Frozen joints.

Note: Frozen joints cause jointed rail to expand similar to CWR.

- Chipped or engine burned rail.
- Corrugated rail.

7.6 Extreme Weather CWR Inspections

7.6.1 Hot Weather Inspections

Heat inspection for tight rail conditions are performed whenever a Level 1 or Level 2 Blanket Heat Restriction is in effect. Each segment of track affected, must be inspected daily, sometime between the hours of 12:00 Noon and 6:00 PM while blanket heat restrictions are in place. When tight rail conditions are present, a speed restriction of 25 mph or less must be placed or track removed from service until repair or adjustment is made.

7.6.2 Cold Weather Inspections

These cold weather inspections thresholds are established to provide a system guideline for track inspections when there are high tensile forces in the rail. Note: These are minimum requirements and more restricted requirements may be required based on track conditions.

Cold weather mainline inspections will be performed as directed by the Director Track Maintenance, when the rail temperature has or is forecasted to:

1. Reach a rail temperature 85° F below the rail laying temperature for the first cold weather event of the season. This temperature is identified in Section 7.10.10 Reporting Track Buckling Activities, Table 7-J; for each subdivision in the “First Event Cold Weather Inspection Temperature” column.
   - This requirement is designed to address the first wave of service failures that are seen with the first significant drop in temperature. Inspect within 12 hours of meeting this threshold.
   - There could be a significant period of time where ambient temperatures warm back-up after this first cold weather event, in this case use the 85° F below the rail laying temperature threshold again. This is somewhat subjective but typically if the temperature drops then rises again for a period of two or more consecutive days, then it is considered a significant period of time.
   - The standard length of duration will be 24 hours, where then the temperature will be re-evaluated and determination if the inspections needs to remain in effect.
2. Reach a rail temperature 100° F below the rail laying temperature. This temperature is identified in Section 7.10.10 Reporting Track Buckling Activities, Table 7-J for each subdivision in the “Cold Weather Inspection Temperature” column.
   - A cold weather inspection will be performed when the rail temperature is 100° F below the rail laying temperature and repeated every 24 hours until such time as the rail temperature does not exceed the 100° F below rail laying temperature.
3. Experience a rapid ambient temperature drop of 40° F or more within a 24 hour period, when the ambient temperature is at or below the “Rapid Temperature Drop of 40° F or More Below Temperature” for the subdivision. See Table 7-J in Section 7.10.10 Reporting Track Buckling Activities for the temperature.
   - A cold weather inspection will be performed during this rapid temperature drop, to be repeated every 24 hours until such time as the ambient temperature exceeds that listed in Table 7-J.

First Time Ambient Temperature Drops 85ºF Below Rail Laying Temperature	Ambient Temperature Drops to 100ºF Below Rail Laying Temperature	Experience Rapid Ambient Temperature Drop of 40+ºF Within 24 Hour Period
Perform cold weather inspection within 12 hours. After 24 hours, re-evaluate to determine if inspections need to continue.	Perform cold weather inspection and repeat every 24 hours until rail temperature is above the threshold of 100ºF below rail laying temperature.	Perform cold weather inspection during the rapid temperature drop, and repeat every 24 hours until the ambient temperature exceeds that listed in Table 7-J under the "Rapid Temperature Drop" column.

7.7 Placing Blanket Heat Restrictions

Use this procedure when the ambient (air) temperature reaches or exceeds the temperature shown in the **"Rail Laying Temperature for Continuous Welded Rail Table and Blanket Speed Table "** See Table 7-J.

7.7.1 Level 1 Heat Restrictions

Place a Level 1 heat restriction when the ambient temperature is forecasted to exceed the Level 1 threshold. When the forecast temperature is predicted to reach blanket thresholds, contact the dispatcher and issue the heat restriction the day prior to being needed. Blanket Speed Restrictions for trains are listed in the current System Special Instructions.

7.7.2 Level 2 Heat Restrictions

Place a Level 2 heat restriction when the ambient temperature is forecasted to reach or exceed the Level 2 threshold. Blanket Speed Restrictions for trains are listed in the current System Special Instructions.

7.7.3 Blanket Cold Weather Restrictions

Blanket cold weather restrictions are established to provide system guidelines for placing track speed restrictions, when there are high tensile forces in the rail generated from extreme cold temperatures.

- These speed restrictions will be put out as a Form C bulletin. They may be placed during various times of the day, but not less than 12 hours increments. An example would be “in effect from 9:00 PM until 9:00 AM.”
- Thresholds for subdivision cold weather speed restrictions are based on the cold weather inspection guidelines.
- Cold weather mainline speed restrictions will be issued by the Manager Track Maintenance or the Director Track Maintenance, when the rail temperature has or is forecasted to:

  1. Reach a rail temperature of 85° F below the subdivision rail laying temperature for the first cold weather event.
     - Place a blanket cold weather restriction.
     - This rail temperature is identified in Section 7.10.10, Table 7-J for each subdivision in the “First Event Cold Weather Inspection Temperature” column.
     - There could be a significant period of time, where ambient temperatures warm back-up after the first cold weather event, in this case use the 85° F below the rail laying temperature threshold again.
     - The standard length of duration for the cold order restriction will be 12 hours, when the temperature will be re-evaluated and a determination will be made if the order needs to remain in effect.
  2. Reach a rail temperature of 100° F below the subdivision rail laying temperature for a sustained cold weather event.
     - Place a blanket cold weather restriction.
     - The subdivision rail temperatures are found in Section 7.10.10, Table 7-J in the “Cold Weather Inspection Temperature” column.
     - The standard length of duration for the cold weather restriction will be 12 hours, when the temperature will be re-evaluated and a determination will be made if the order needs to remain in effect.
  3. Experience a rapid ambient temperature drop of 40° F or more is within a 24 hour period and the ambient temperature is at or below the “Rapid Temperature Drop of 40° F or More Below Temperature” column for the subdivision a cold weather speed restriction will be placed. See Table 7-J.
     - This cold weather speed restriction will remain in effect until the track inspection for the subdivision has been completed and track is safe for normal speed.
     - The standard length of duration for the cold order will be 12 hours, where then the temperature will be re-evaluated and determination if the order needs to remain in effect.

First Time Ambient Temperature Drops 85ºF Below Rail Laying Temperature	Ambient Temperature Drops to 100ºF Below Rail Laying Temperature	Experience Rapid Ambient Temperature Drop of ≥ 40ºF Within a 24 Hour Period
Place a blanket cold weather speed restriction (SSI 2-E). The standard duration of the restriction is 12 hours, after which time the temperature will be re-evaluated to determine if the restriction needs to remain in effect.	Place a blanket cold weather speed restriction (SSI 2-E). The standard duration of the restriction is 12 hours, after which time the temperature will be re-evaluated to determine if the restriction needs to remain in effect.	Place a blanket cold weather speed restriction (SSI 2-E). Restriction remains in effect for a minimum of 12 hours, until the track inspection for the subdivision is completed and track is safe for normal speed. Also, re-evaluate the temperature to determine if the restriction needs to remain in effect.

7.7.4 Removal of Blanket Heat Restrictions

The removal time for a blanket heat restriction is 9:01 PM. However, if the ambient temperature cools below the temperature threshold before 9:01 PM, the blanket heat restriction can be removed earlier.

7.8 Placing Temporary Speed Restrictions Account Track Work

A temporary speed restriction account track work should be used anytime undercutting, sledding, plowing, surfacing, lining, tie installation, track construction, or track rehabilitation is performed during hot weather. When any other type of work that disturbs the roadbed or ballast section is performed during hot weather, a slow order needs to be used to protect the track structure.

7.8.1 General Requirements

Speed restrictions ensure safe train operations until the affected track stabilizes. Restrictions need to stay in place to allow the ballast to consolidate, rail compressive forces to equalize, and the sub-grade to compact. Take more restrictive measures when work conditions warrant. For example, work on heavy grades or sharp curves may require more restrictive speeds until the track stabilizes.

A high-use format (F-1, F-2, F-X) will be utilized when issuing automatic step-up speed increases as detailed in Section 7.8.9 through Section 7.8.15 and Table 7-H. CAD will now calculate actual train tonnage moving over the designated restriction. The speed will increase automatically and the final speed restriction will remain in effect until an engineering employee inspects the location and removes the restriction. When an F-X restriction is specified, the speed will automatically increase to maximum speed for that location except when issued for Ordinary Maintenance, at or above the required threshold. When an F-X restriction is specified for Ordinary Maintenance at or above the required threshold, the track must be inspected before resuming maximum speed. This speed increase will change based on tonnage regardless of duration or time of day. Step-up speed restrictions must be issued at the end of the work day immediately prior to releasing the track for service. The engineering employee in charge is responsible for determining if the 45 mph restriction is in place in order to arrange for inspection and removal of the restriction.

If it is determined that the track must be inspected before the speed is increased, a conventional single speed slow order must be used and any additional speed increase must be requested individually.

The local maintenance manager, supervisor, or foreman in charge must notify the dispatcher prior to a scheduled step-up speed increase if he knows of or suspects any reason why the track is not good for the next higher speed. Depending on the type of work performed and the ambient temperature, tight rail conditions may require de-stressing to relieve compression in the rail.

The following activities can also reduce the lateral stability of the track and may require a speed restriction:

- Constructing and rehabilitating tracks and bridges.
- Raising bridges.
- Changing bridge headwalls and installing signal appliances.
- Digging cable under the track.
- Performing any other activity that substantially disturbs the ballast section.

7.8.2 Consolidation of Ballast

Restoring the consolidation and lateral resistance of the disturbed track structure is critical in the operation of trains. Trains and/or dynamic track stabilizers are used to restore ballast consolidation.

Surfacing and lining operations reduce track lateral resistance by 40% to 60%. Traffic consolidation of 0.1 MGT is required to increase lateral resistance to 30% to 50% of the reduced value. A Dynamic Track Stabilizer (DTS), that is set up and operated correctly, can also return track to the 30% to 50% of the reduced value.

Table 7-F contains the system averages for trains required to achieve the 0.1 MGT by train category. This includes the loaded and empty cycles.

Train Categories	Ave. No. of Cars	Ave. Tonnage/Train	# Trains Required
Coal	128.2	10,553	9.5
Grain	94.2	7,862	12.7
Ore	85	6,824	14.7
Manifest	88.7	6,916	14.5
Premium Intermodal	70.7	4,526	22.1
Standard Intermodal	95.8	5,428	18.4
Automotive	61.8	4,147	24.1
Rock	73.4	6,127	16.3
System Average	92.7	7,134	14.0

Table 7-F

The system average for a train is 7,134 tons per train and will require 14 trains to achieve the 0.1 MGT. The system average train is what is being used for the number of trains to return the track consolidation to 30% to 50% of the reduced value. For purposes of consolidation the system average train will be used.

7.8.3 Responsibility for Placing Speed Restrictions

The supervisor or foreman in charge of the work is responsible for placing the appropriate speed restriction when required.

During the work or before returning the track to service, the supervisor or foreman in charge must ensure the following:

- Adequate surface and alignment have been established.
- Sufficient crib and shoulder ballast are in place.
- The rail is properly anchored.

7.8.4 Multiple Maintenance Operations on Same Track

If performing more than one type of work on the same segment of track, place the most restrictive speed on the track. For example, if the same segment of track is being protected for rail relays (30 MPH maximum speed) and surfacing (15 MPH maximum speed); restrict the speed to 15 MPH on the track.

7.8.5 Special Air Brake and Train Handling Requirements

To prevent track buckling and train derailments, the supervisor or foreman in charge will impose special train-handling procedures (Rule 34.2.13 – Disturbed Track/Temporary Speed Restrictions/Heat Restrictions) as outlined in Sections 7.8.9 through 7.8.15. The supervisor or foreman in charge may impose Rule 34.2.13 when deemed necessary, even if not required by theses instructions.

To request that UPRR Rule 34.2.13 be added to the temporary speed restriction, the supervisor in charge or Track Foreman will notify the Train Dispatcher and state "Rule 34.2.13 applies from M.P. _____ to M.P. _____."

Note: When conditions no longer warrant, remove UPRR Rule 34.2.13 from the restriction.

7.8.6 Speed Restriction Length for Disturbed Track

To minimize running rail and other dynamic forces, trains must have time to brake and adjust slack before entering the disturbed track. To ensure trains reach the desired speed before entering the affected track, place speed restrictions at least 1/4 mile in each direction from the outside limits of the affected track.

For heavy grades, sharp curves, or substandard track conditions, extend speed restrictions farther from the work limits if needed.

7.8.7 Rail Temperature Thresholds

The implementation of speed restrictions behind track work is based on the rail laying temperature for a territory plus 10° F. To determine the requirements for speed restrictions behind track work, compare the high rail temperature or forecasted high rail temperature for the day and the subdivision rail temperature from the column in Table 7-J titled "Rail Temperature for Speed Restrictions Behind Track Work." Then place the required speed restrictions. Table 7-G is a sample highlighting the correct column.

Note: When estimating rail temperature based on ambient temperature, either for speed restrictions behind track work or blanket speed restrictions, a rule-of-thumb that can be used is that rail temperature is generally 30 degrees Fahrenheit above ambient temperature.

Subdivision	Station		Rail Laying Temperature Rail Temp. Deg. (F)	Rail Temperature for Speed Restriction behind Track Work Rail Temp. Deg. (F)	Blanket Heat Speed Restriction (Level 1) Amb. Temp. Deg. (F)	Blanket Heat Speed Restriction (Level 2) Amb. Temp. Deg. (F)	First Event Cold Weather Inspection Temperature Rail Temp. Deg. (F)	Cold Weather Inspection Temperature Rail Temp. Deg. (F)	Rapid Temperature Drop of 40 F or More Below Temperature Amb. Temp. Deg. (F)
Adams	Adams	BJ South	95	105	85	95	10	-5	55
Alameda Corridor	East Redndo	W. Thenard	115	125	105	115	30	15	75
Albert Lea	S St Paul	Mason City	95	105	85	95	10	-5	55
Alexandria	Willow Glenn	Livonia	115	125	100	110	30	15	75
Alhambra	W Colton	Yuma Jct.	115	125	105	115	30	15	75
Altoona	W. Minster	Altoona	95	105	85	95	10	-5	55
Angleton	Algoa	Bloomington	115	125	100	110	30	15	75

Table 7-G

7.8.8 Speed Restrictions for Track Panel Installations

The maximum authorized speed over track with more than 5 consecutive track panels with square joints is 40 MPH on wood ties and 25 MPH on concrete ties until the joints are staggered or removed.

7.8.9 Newly Constructed Track/Switches

Follow these requirements to protect newly constructed track, new track panels, new panel turnouts or switches that have been installed.

A. Rail Temperature is Below or Forecasted Below the "Rail Temperature Required for Speed Restriction Behind Track Work" for the Subdivision

To protect newly constructed track when rail temperatures are below or forecasted below the "Rail Temperature Required for Speed Restriction Behind Track Work" for the subdivision, issue an F-1 speed restriction. An F-1 speed restriction requires trains to:

1. Restrict the maximum speed to 15 MPH for CWR (10 MPH jointed rail) and for 40,000 tons.
2. Increase the maximum speed to 30 MPH for 60,000 tons.
3. Increase the maximum speed to 45 MPH.
4. If the track is safe for higher speeds, release the track for maximum authorized speed.

B. Rail Temperature is At or Above the Forecasted "Rail Temperature Required for Speed Restriction Behind Track Work" for the Subdivision

To protect newly constructed track when rail temperatures are above or forecasted above the "Rail Temperature Required for Speed Restriction Behind Track Work" for the subdivision issue an F-2 speed restriction. An F-2 speed restriction requires trains to:

1. Restrict the maximum speed to 15 MPH for CWR (10 MPH jointed rail) for 50,000 tons.
2. Increase the maximum speed to 30 MPH for 50,000 tons.
3. Increase the maximum speed to 45 MPH.
4. If the track is safe for higher speeds, release the track for maximum authorized speed.

7.8.10 Undercut, Sledded or Plowed Track

Follow these requirements for protecting undercut, sledded, plowed or crane raised track.

When the rail temperature is at or above or forecasted to be above the "Rail Temperature Required for Speed Restriction Behind Track Work " and tight rail conditions, such as lateral rail movement (Section 7.5.1), vertical rail movement (Section 7.5.2), and longitudinal rail movement (Section 7.5.3), are present, the rail must be de-stressed.

A. Rail Temperature is Below or Forecasted Below the "Rail Temperature Required for Speed Restriction Behind Track Work" for the Subdivision

To protect undercut, sledded, plowed, or crane raised track when rail temperatures are below or forecasted below the "Rail Temperature Required for Speed Restriction Behind Track Work" for the subdivision, issue an F-1 speed restriction. An F-1 speed restriction requires trains to:

1. Restrict the maximum speed to 15 MPH for CWR (10 MPH jointed rail) for 40,000 tons.
2. Increase the maximum speed to 30 MPH for 60,000 tons.
3. Increase the maximum speed to 45 MPH.
4. If the track is safe for higher speeds, release the track for maximum authorized speed.

B. Rail Temperature is At, Above or Forecasted Above the "Rail Temperature Required for Speed Restriction Behind Track Work" for the Subdivision

To protect undercut, sledded, plowed, or crane raised track, new panel turnouts, and new track panels installed in grade crossings when rail temperatures at, above or forecasted above the "Rail Temperature Required for Speed Restriction Behind Track Work" for the subdivision issue an F-2 speed restriction. An F-2 speed restriction requires trains to:

1. Restrict the maximum speed to 15 MPH for CWR (10 MPH jointed rail) for 50,000 tons.
2. Increase the maximum speed to 30 MPH for 50,000 tons.
3. Increase the maximum speed to 45 MPH.
4. If the track is safe for higher speeds, release the track for maximum authorized speed.

7.8.11 Tie and Surfacing Operations with Tie Installation

When rail temperatures are at or forecasted above the "Rail Temperature Required for Speed Restriction Behind Track Work" for that subdivision, do not replace more than 50 percent of the cross or switch ties in any rail length or-more than two consecutive cross or switch ties. Single pass production tie operations are allowed at rail temperatures at or below the "Rail Temperature Required for Speed Restriction Behind Track Work" for that subdivision. (Reference Table 7-J).

When making additional passes to install ties ensure the following:

- All ties installed in the first pass have been fully spiked and anchored.
- Sufficient ballast is placed to maintain proper surface and alignment.

These tie replacement requirements do not apply when installing ties at the following locations:

- Road crossings.
- Open deck bridges.
- Station platforms.
- Confined track areas.
- Sledding, plowing, or undercutting operation.

When the rail temperature is at, above or forecasted to be above the "Rail Temperature Required for Speed Restriction Behind Track Work" and tight rail conditions, such as lateral rail movement (Section 7.5.1), vertical rail movement (Section 7.5.2), and longitudinal rail movement (Section 7.5.3), are present, the rail must be de-stressed.

Follow these requirements for protecting tie and surfacing operations.

A. Rail Temperature is Below or Forecasted Below the "Rail Temperature Required for Speed Restriction Behind Track Work" for the Subdivision

To protect tie and surfacing operations when rail temperatures are below or forecasted below the "Rail Temperature Required for Speed Restriction Behind Track Work" for the subdivision, issue an F-1 speed restriction. An F-1 speed restriction requires trains to:

1. Restrict the maximum speed to 15 MPH for CWR (10 MPH jointed rail) for 40,000 tons.
2. Increase the maximum speed to 30 MPH for 60,000 tons.
3. Increase the maximum speed to 45 MPH.
4. If the track is safe for higher speeds, release the track for maximum authorized speed.

B. Rail Temperature is At or Above the Forecasted "Rail Temperature Required for Speed Restriction Behind Track Work" for the Subdivision

To protect tie and surfacing operations when rail temperatures are at or above the forecasted "Rail Temperature Required for Speed Restriction Behind Track Work" for the subdivision issue an F-2 speed restriction. An F-2 speed restriction requires trains to:

1. Restrict the maximum speed to 15 MPH for CWR (10 MPH jointed rail) for 50,000 tons.
2. Increase the maximum speed to 30 MPH for 50,000 tons.
3. Increase the maximum speed to 45 MPH.
4. Release the track for maximum authorized speed if it is safe to do so.

C. Hot Weather Instructions for System Tie Gangs

1. When the rail temperature is at or above the forecasted "Rail Temperature Required for Speed Restriction Behind Track Work" for the Subdivision:
   a. Do not replace more than 50% of the cross ties in any rail length at one time.
   b. Do not replace more than two consecutive cross or switch ties at one time.
   c. Tamp all new ties, and any other ties that are hanging, or have been obviously disturbed from the ballast section (hanging/disturbed ties must be identified for tamper operator with paint mark on center of tie).
   d. All cribs must be completely filled, shoulders restored, and all newly installed ties must have all anchors applied and spikes driven prior to resuming train operations.

D. General Instructions for System Tie Gangs

a. Scarifiers must be equipped with digger head extensions to ensure ties are installed without the need to raise the rail significantly for tie plate installation. Scarify the tie bed to a depth that will allow approximately 1" clearance between top of newly installed tie and bottom of rail base. Digger head teeth must be adjusted/replaced in order to allow machine to dig tie holes to proper depth.

b. Regardless of rail temperature, extracting TRIP operator must take special care not to raise the rail more than necessary to extract ties. TRIP operators must not use rail clamps except when necessary to remove plate-cut ties. Foremen and Asst. Foremen must continually monitor extracting TRIPs to ensure that rail raises are kept to an absolute minimum.

c. Rail lifter operators must take care to only make the minimum lift necessary to install tie plates on each individual new tie. This may require continual adjustment of the machine. Foremen and Asst. Foremen must continually monitor rail lifters to ensure that rail raises are kept to an absolute minimum.

d. Regardless of rail temperature, all new ties, and any other ties that are hanging, or have been obviously disturbed from the ballast section, must be tamped.

e. Any misalignments caused by tie gang, that are 4” or less, must be de-stressed unless tamper is able to line track back in one pass without resistance. Any misalignments caused by tie gang that are greater than 4” must be de-stressed.

f. Regardless of rail temperature, Tie Gang MTP or Track Supervisor must coordinate with local MTM for de-stressing of any known areas where tight rail conditions, such as lateral movement, vertical rail movement, and longitudinal rail movement exist. These locations must be de-stressed by Service Unit or Regional welders prior to installation of ties.

g. Do not replace more than 50% of the cross or switch ties in any rail length at one time when the rail temperatures are at or forecasted above the “Rail Temperature Required for Speed Restriction Behind Track Work” for the Subdivision. Do not replace more than two consecutive cross or switch ties at one time. When making additional passes to install ties, ensure the following:

- All ties installed in the first pass have been fully spiked and anchored.
- Sufficient ballast is placed to maintain proper surface and alignment.

h. Regardless of rail temperature, ensure that sufficient shoulder and crib ballast is placed to maintain proper surface and alignment. In addition, ensure that sufficient spikes and anchors are installed to allow for safe train operations.

E. Pull Safe Requirements for Tie Gangs

A. Ramp-up for the following production day can be considerably shortened by working spike pullers past the designated stopping point for the day. The Tie Gang Supervisor and Foreman must conduct a Job Briefing regarding the provisions of these requirements, to ensure that the track structure is not weakened enough to impair safe train operations.

a. On tangent track, spikes may only be pulled from “single” (non-consecutive) ties. On curves, spikes may only be pulled from “single” ties that are followed by a sufficient number of line-spiked ties according to the following table. Do not pull spikes from ties with curve block plates.

Required Number of Line-Spiked Ties Between “Pull-Safe” Ties on Curves:

0˚ to 1˚ 59’	2˚ to 3˚ 59’	4˚ and greater
2 Ties	3 Ties	Do not “Pull Safe”

b. Do not pull spikes from ties at rail joint locations.

c. Ensure that “pull safe” track is protected by the appropriate speed restriction to allow for safe train operations.

d. Do not leave “pull safe” track during the Tie Gang off-cycle days.

e. The Tie Gang Supervisor or Foreman must perform a walking inspection of “pull safe” track, to ensure that the above guidelines have been complied with before releasing the track for train operations.

7.8.12 Track Consolidation with Track Stabilizers

Follow these requirements to protect track that has been stabilized with a Ballast Track Stabilizer regardless of temperature. Issue an F-X speed restriction. An F-X speed restriction requires trains to:

1. Restrict the maximum speed to 30 MPH for 10,000 tons.
2. Release the track for maximum authorized speed if it is safe to do so.

7.8.13 Rail Relays

Follow these requirements for protecting rail relays regardless of temperature. Issue an F-X speed restriction. An F-X speed restriction requires trains to:

1. Restrict the maximum speed to 30 MPH for 10,000 tons.
2. Release the track for maximum authorized speed if it is safe to do so.

Note: If surfacing in conjunction with these relays, restrict train speeds as outlined for surfacing gangs. See Section 7.8.14 Maintenance Surfacing.

7.8.14 Maintenance Surfacing

Maintenance surfacing includes out-of-face surfacing that is equal to or greater than 19 feet 6 inches and does not involve any tie installation.

General Requirements

When performing maintenance surfacing ensure there is sufficient ballast to fill all ballast cribs and establishing the required shoulder. When surfacing across ballast deck bridges, do not shift the track from the center of the deck. Shifting track too far to one side of a ballast deck bridge can create excessive loading to one stringer resulting in premature fatigue to the structure. If needed get a survey to pin the centerline.

Follow these requirements to protect maintenance surfacing..

A. Rail Temperature is Below or Forecasted Below the "Rail Temperature Required for Speed Restriction Behind Track Work" for the Subdivision

When maintenance surfacing is performed and the rail temperatures are below or forecasted below the "rail temperature required for speed restriction behind track work" for the subdivision, issue an F-X speed restriction. An F-X speed restriction requires train to:

1. Restrict the maximum speed to 30 MPH for 40,000 tons.
2. Release the track for maximum authorized speed if it is safe to do so.

B. Rail Temperature is At or Above the Forecasted "Rail Temperature Required for Speed Restriction Behind Track Work" for the Subdivision

To maintenance surfacing is performed and when rail temperatures are at or above the forecasted "Rail Temperature Required for Speed Restriction Behind Track Work" for the subdivision issue an F-2 speed restriction. An F-2 speed restriction requires trains to:

1. Restrict the maximum speed to 15 MPH for CWR (10 MPH jointed rail) for 50,000 tons.
2. Increase the maximum speed to 30 MPH for 50,000 tons.
3. Increase the maximum speed to 45 MPH.
4. Release the track for maximum authorized speed if it is safe to do so.

7.8.15 Ordinary Maintenance

Follow these requirements to protect routine cross and switch tie installations, spot surfacing, and lining operations performed by section gangs or other maintenance forces.

Note: Spot surfacing is considered ordinary maintenance when the length of track disturbed is less than 19 feet 6 inches. Surfacing without tie installation equal to or greater than 19 feet 6 inches is considered maintenance surfacing in Section 7.8.14

General Requirements

When performing maintenance, speed restrictions may be required for these conditions, regardless of the temperature or grade of the track:

- Tight rail.
- Insufficient ballast.
- Unstable sub-grade.
- Sharp curvature.
- Other special conditions.

When the rail temperature is at or above or forecasted to be above the "Rail Temperature Required for Speed Restriction Behind Track Work " and tight rail conditions, such as lateral rail movement (Section 7.5.1), vertical rail movement (Section 7.5.2), and longitudinal rail movement (Section 7.5.3), are present, the rail must be de-stressed.

A. Rail Temperature is Below or Forecasted Below the "Rail Temperature Required for Speed Restriction Behind Track Work" for the Subdivision

When ordinary maintenance consists of installing cross and switch ties and the rail temperatures are below or forecasted below the "rail temperature required for speed restriction behind track work" for the subdivision, issue an F-X speed restriction. An F-X speed restriction requires train to:

3. Restrict the maximum speed to 30 MPH for 10,000 tons.
4. Release the track for maximum authorized speed if it is safe to do so.

To protect all other ordinary maintenance rail temperatures are below or forecasted below the "Rail Temperature Required for Speed Restriction Behind Track Work" for the subdivision.

Do not replace more than three consecutive cross or switch ties at one time.

B. Rail Temperature is At or Above the Forecasted "Rail Temperature Required for Speed Restriction Behind Track Work" for the Subdivision

To protect all ordinary maintenance when rail temperatures are at or above the forecasted "Rail Temperature Required for Speed Restriction Behind Track Work" for the subdivision, issue an F-X speed restriction An F-X speed restriction requires trains to:

1. Restrict the maximum speed to 30 MPH for 50,000 tons.
2. Increase the maximum speed to 45 MPH.
5. Release the track for maximum authorized speed if it is safe to do so.

Do not replace more than two consecutive cross or switch ties at one time.

7.8.16 Summary of Speed Restrictions for Track Work

A. Table 7-H is used for placing speed restrictions when track work has been performed that disturbs the lateral stability of the track structure. This table summarizes the speed restrictions for different track conditions.

B. Table 7-H can also be used to issue a Step Up Speed Restriction.

1. When issuing step up speed restrictions employee will determine the type of work to be performed and whether the actual or forecasted rail temperature is below or at/above that temperature. The employee will request the slow order by designating the type of work performed and the specific format to be issued.

Example: "Dispatcher, this is Track Foreman Smith performing tie and surfacing operations, please issue an F-2 step up speed restriction."

2. The **F-X** format will require the tonnage and speed to be stated to the dispatcher and whether the track needs to be inspected before returning to maximum speed.

Example: "Dispatcher, this is Track Foreman Smith performing tie and surfacing operations, please issue an F-X step up speed restriction, 40,000 tons at 30 mph, no inspection is necessary." OR
Example: "Dispatcher, this is Track Foreman Smith performing ordinary maintenance, please issue an F-X step up speed restriction, 50,000 tons at 30 mph, an inspection is necessary before returning to maximum speed."

3. Computer Aided Dispatching (CAD) will now calculate actual train tonnage over the designated restriction. For example, the increase in speed, from 15 mph to 30 mph and from 30 mph to 45 mph will increase automatically. The 45 mph speed restriction will remain in effect until an engineering employee inspects the location and removes the restriction. This speed increase will change based on tonnage regardless of duration or time of day.
4. Step up speed restrictions must be issued at the end of the work day immediately prior to releasing the track for service.
5. The engineering employee in charge is responsible for determining if the 45 mph restriction is in place in order to arrange for inspection and removal of the restriction.

If it is determined that the track must be inspected before the speed is increased, a conventional single speed slow order must be used and any additional speed increase must be requested individually.

Summary of Speed Restrictions for Track Work				
Type of work being performed is…	**Determine the actual or forecasted rail temp. then refer to Table 7-J to find subdivisions rail temp. threshold for applying speed restrictions behind track work.** **If the actual/forecasted rail temp. compared to the subdivision Table 7-J is . . .**	**Place a 15 MPH speed restriction for CWR (10 MPH for jointed rail) for . . .**	**Then place a 30 MPH speed Restriction for . . .**	**Then place a 45 MPH speed restriction for . . .**
Newly Constructed Track/Switches	Below **(F-1)**	40,000 tons	60,000 tons	Until inspected and removed
	At or above **(F-2)**	50,000 tons	50,000 tons	Until inspected and removed
Undercut, Sledded or Plowed Track	Below **(F-1)**	40,000 tons	60,000 tons	Until inspected and removed
	At or above **(F-2)**	50,000 tons	50,000 tons	Until inspected and removed
Tie or Surfacing Operations with Tie Installation	Below **(F-1)**	40,000 tons	60,000 tons	Until inspected and removed
	At or above **(F-2)**	50,000 tons	50,000 tons	Until inspected and removed
Track Consolidation with Track Stabilizers	Below **(F-X)**	Not applicable	*10,000 tons Employee must state designated tonnage	Not applicable
	At or above **(F-X)**	Not applicable	*10,000 tons Employee must state designated tonnage	Not applicable
Rail Relays	All Temperatures **(F-X)**	Not applicable	*10,000 tons Employee must state designated tonnage	Not applicable
Maintenance Surfacing	Below **(F-X)**	Not applicable	*40,000 tons Employee must state designated tonnage	Not applicable
	At or above **(F-2)**	50,000 tons	50,000 tons	Until inspected and removed
Ordinary Maintenance	Below **(F-X)**	Not applicable	*10,000 tons Employee must state designated tonnage	Not applicable
	At or above **(F-X)**	Not applicable	50,000 tons Employee must state designated tonnage	Until inspected and removed

Table 7-H

Note: These are minimum requirements. More restrictive measures must be taken when conditions warrant additional protection.
***Engineering employee may request a conventional 30 mph speed restriction when they wish to inspect the track before returning to maximum speed or they may authorize the designated speed directly to the train when their Form B track bulletin is still in effect.**

7.8.17 Slow Order Codes

These codes will be used when placing slow orders on a segment of track. These codes are intended to provide a clear definition of the nature of a slow order. See Table 7-H-1.

Description	Code	Description	Code
Bridge Approach	B10	Switch Point Defect	T24
Bridge Repair/Condition	B11	Rail Test Car Defect	T25
Bridge Construction	B12	Geometry Car Defect	T26
Culvert Condition	B20	Gage Defect	T27
Culvert Repair	B21	Rail Crossing Defect	T28
Tunnel Repair/Construction	B30	Insufficient Ballast	T29
Viaduct Repair/Construction	B40	Derailment Site	T30
Signal Gang Work	S10	High Water	T31
Signal System Installation	S11	Sub grade Condition	T32
Signal Crossing Repair	S12	Washout	T33
Signal Out of Service	S13	Maintenance Surfacing	T34
Signal Turnout Repair	S14	Maintenance Tie Installation	T35
Slide Fence Not Working	S15	Bridge Approach	T36
Signal Defect/Insulated Joint	S16	Small Culvert Fail	T37
Behind System Rail Gang	T10	Tie Condition (Concrete)	T38
Behind System Tie Gang	T11	Insulated Joints (Level 1 & 2)	T39
Behind Production Surf Gang	T12	Heat Order (Level 1)	T40
Behind Sled/Undercut	T13	Heat Order (Level 2)	T41
Behind Welding Gang	T14	Cold Order	T42
Track Construction	T15	Blanket Order Ahead DC	T43
Switch Installation	T16	Blanket Order Ahead EC	T44
Road Crossing Repair	T17	Tie pads (Concrete)	T45
Rail Crossing Repair	T18	Tie Condition (Composite)	T46
Crossing Protection	T19	BUC Undercutter	T47
Rail Condition	T20	Passing Outfit Cars	T50
Surface & Line Condition	T21	Work Adjacent Track	T51
Tie Condition Wood	T22	Speed Incrse / Incremt	T60
Switch/Frog Defect	T23	CWR Rail Neutral Temperature (RNT) Adjust	T61

Table 7-H-1

When applying the reason codes above, use the cause code that resulted in placing the slow order on the track.

Example: Codes T43 and T44 may be used ahead of DC and EC inspections, respectively, in order to reduce train dispatcher workload associated with unforeseen speed restrictions. These blanket orders are to be removed within 24 hours of the inspection. At that time, any remaining speed restrictions that are required to be left on should be changed to the appropriate T25 or T26 code. If a speed restriction with a T26 code is still in effect after 7 days, it should be changed to the appropriate code to reflect the underlying condition which caused the geometry defect, i.e., surface and line condition, tie condition, gage defect, etc.

7.9 Track Buckling Preventive Maintenance

Track Buckling Prevention is an on-going process. Performing track buckling preventive maintenance throughout the year can reduce the risk of track buckles. Controlling and maintaining neutral temperature is critical to the track buckling prevention effort. It is important to understand what causes track buckles, control the rail's neutral temperature, inspect the track structure, place speed restrictions, and utilize standard maintenance practices for maintaining neutral temperature.

Controlling the neutral temperature is the most critical component of the track buckling effort. The following processes are used to accomplish this.

- Utilize reference marks when adjusting rail.
- Utilize heat control when installing rail.
- Rail expansion is achieved through use of adjustment tables, match marks and regulating heat.
- Utilize rail expanders and super jacks for stretching rail.
- Repair CWR Adjust* and Cut-in/Cut-out maintenance items.
- Manage curves by staking, monitoring and adjusting as necessary.

Note: CWR-Adjust is a method for adjusting neutral temperature in line with Sections 7.9.7 Cold Weather Rail Neutral Temperature Readjustment and 7.9.8 De-Stressing Rail.

To obtain a track buckling free environment, continued improvement in these maintenance practices is required:

- Comply with existing requirements.
- Improve quality control in the rail installation process.
- Improve quality control in the rail adjustment process.
- Develop more effective rail defect repair practices: cold temperature readjustment and hot weather de-stressing.
- Prevent rail creep by ensuring adequate and effective anchors/fasteners.
- Evaluate curves for movement or shift and make repairs.

Once a condition is found that could lead to a track buckle, the necessary maintenance has to be performed. Place the adequate slow order on the track until repairs or maintenance is completed.

7.9.1 Managing CWR Events

Since controlling and maintaining neutral temperature is critical to the track buckling prevention effort, managing CWR events are necessary. It is considered a CWR event anytime continuous welded rail is cut. Table 7-I has been developed to consolidate the requirements for managing CWR events.

CWR Events	Management Process	Type Reference Marks	Quality
Service failures Pull aparts DC defects Track panels ≤ 80' Rail change out ≤ 80'	CWR Adjust	Spanning	CWR Adjust ICUT Process Reference Marks VERSE Testing Weld Audits Weld Tags
Rail change out > 80' ≤ 360' Track panels > 80' ≤ 360'	Cut-in/Cut-out	Pull back	ICUT Process Reference Marks VERSE Testing Weld Audits Weld Tags
Rail change out > 360'	CWR Adjustment Table 4-H	Match Marks	Audit Match Marks
Curve shift	Curve Monitoring	Curve staking	In process

Table 7-I

- Service failures, pull-aparts, detector car defects, track panels less than or equal to 80', rail change out less than or equal to 80' fall within the first group of CWR Events. CWR Adjust is used for this first group of CWR Events to manage the rail neutral temperature. The reference marks that are used for this first group of CWR Events are spanning reference marks. The quality processes that are used for the first group of CWR Events to check and verify compliance are CWR Adjust, ICUT Process, Reference Marks, VERSE Testing, Weld Audits and Weld Tags. CWR Adjust can be accessed on the UPRR Mobile Web. On a mobile device, enter www.up.com>Employee Mobile>MyUP>log in>CWR Adjust Calc.
- Rail replacement and track panel installation greater than 80' and less than or equal to 360'fall within the second group of CWR Events. The Cut-in/Cut-out process is used for this second group of CWR Events to manage the rail neutral temperature. This process essentially maintains the rail neutral temperature that was present at the time of the break or cut by not adding additional rail. The reference marks that are used for the second group of CWR Events are pull back reference marks. The quality processes that are used for the second group of CWR Events to check and verify compliance are ICUT Process, Reference Marks, VERSE Testing, Weld Audits and Weld Tags.
- Rail change out greater than 360' fall within the third group of CWR Events. The CWR Adjustment Table 4-H is used to manage the rail neutral temperature and get it to the designated rail laying temperature. The reference marks that are used for the third group of CWR Events are match marks. The quality processes that are used for the third group of CWR Events is to audit the Match Marks.
- Curve shift falls within its own group of CWR Events. Curve monitoring is used to manage the rail neutral temperature. Curve staking is used as reference marks to manage curve shift CWR Event.

7.9.2 Placing Reference Marks

Placing rail reference marks is a method of controlling the amount of rail added or subtracted in CWR territory. Reference marks must be utilized prior to cutting CWR for any reason.

In the case of a rail separation, pull-apart, defect repair, other rail change out and track panel installation, reference marks should always indicate the original distance between the marks before the rail break or pull-apart occurred.

The types of reference marks that are used to manage the CWR events are:

- ***Spanning reference marks*** are used for service failures, pull-aparts, detector car defects, track panels **less than or equal to** 80', rail change out **less than or equal to** 80'. Refer to Section 7.9.3 Placing Spanning Reference Marks.
- ***Pull back reference marks*** are used for rail change out greater than 80' or **less than or equal to** 360'and track panels greater than 80' or **less than or equal to** 360'. Refer to Section 7.9.4 Placing Pull Back Reference Marks.
- ***Match marks*** are used when rail change out is greater than 360'. Refer to Section 4.5.1.A Monitor Rail Movement.
- ***Curve staking*** is used as reference marks to manage curve shift CWR Events. Refer to Section 7.9.9 Managing Cut-in/Cut-out CWR and 7.9.10 Monitoring Curve Movement.

7.9.3 Placing Spanning Reference Marks

Spanning reference marks are used for service failures, pull-aparts, detector car defects, track panels less than or equal to 80', rail change out less than or equal to 80'. Spanning reference marks are used with the CWR Adjust management process and must be utilized prior to cutting CWR for any reason.

Record Spanning Reference Mark Information
In an effort to capture and record certain required information pertaining to work performed, it is important that all information be properly placed on the outside web of rail with a paint stick (Item Number 410-4358).

- Write **gang** ***number, date of repair, actual rail between reference mark without the gap, rail temperature, initial rail gap width and amount of rail added*** on the outside web of the rail with a paint stick (Item Number 410-4358).

- After the final adjustment has been made, write the following completion information**:** ***CMPL, gang number, date of final adjustment and rail removed if any. Record "(0)" if no rail removed.***

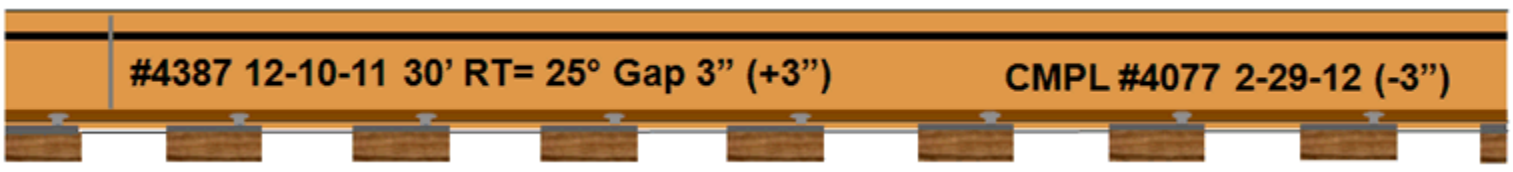

Figure 7-E-1

<u>Example: Spanning Reference Marks - Replacing Rail Due to Surface Defect</u>

Here is an example of using spanning reference marks for a rail surface defect rail replacement where temporary joint bars have been applied. Since this is less than 80 feet, this is a CWR Adjust event.

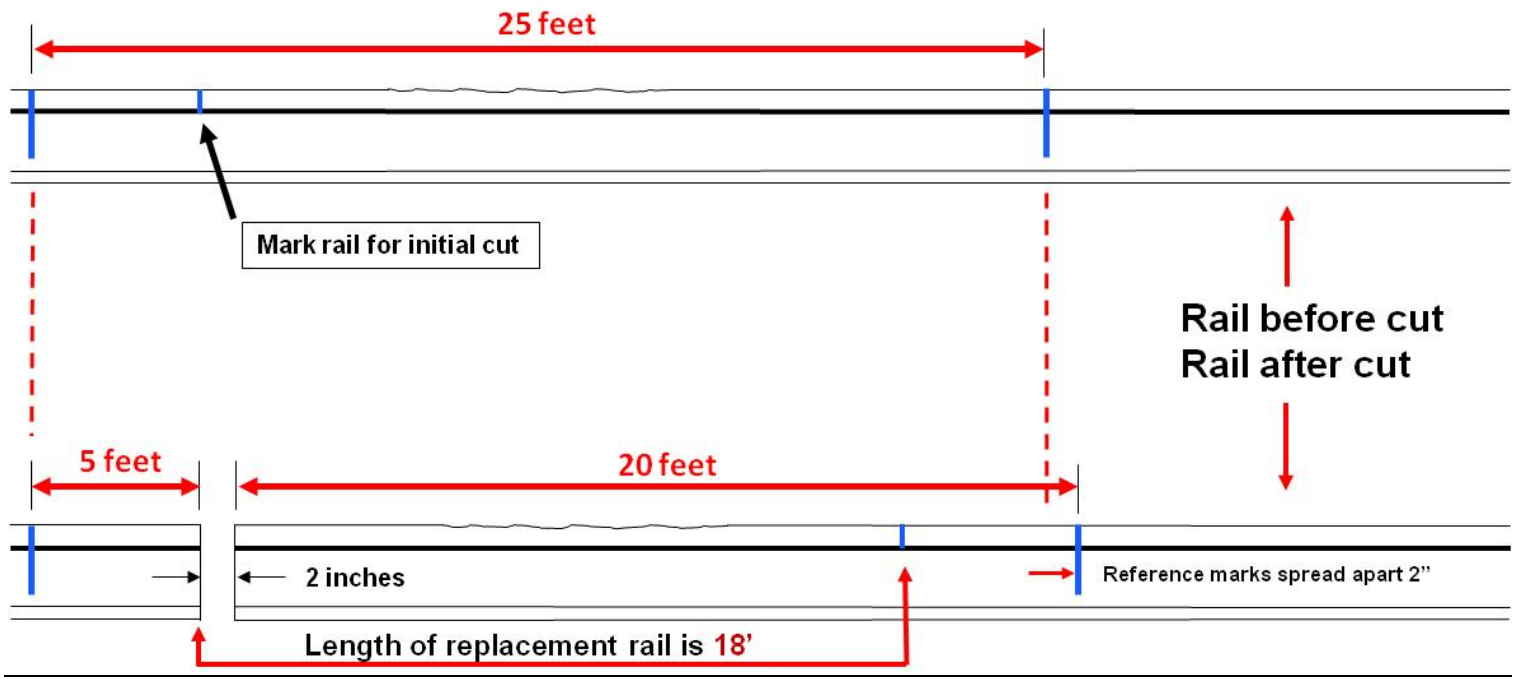

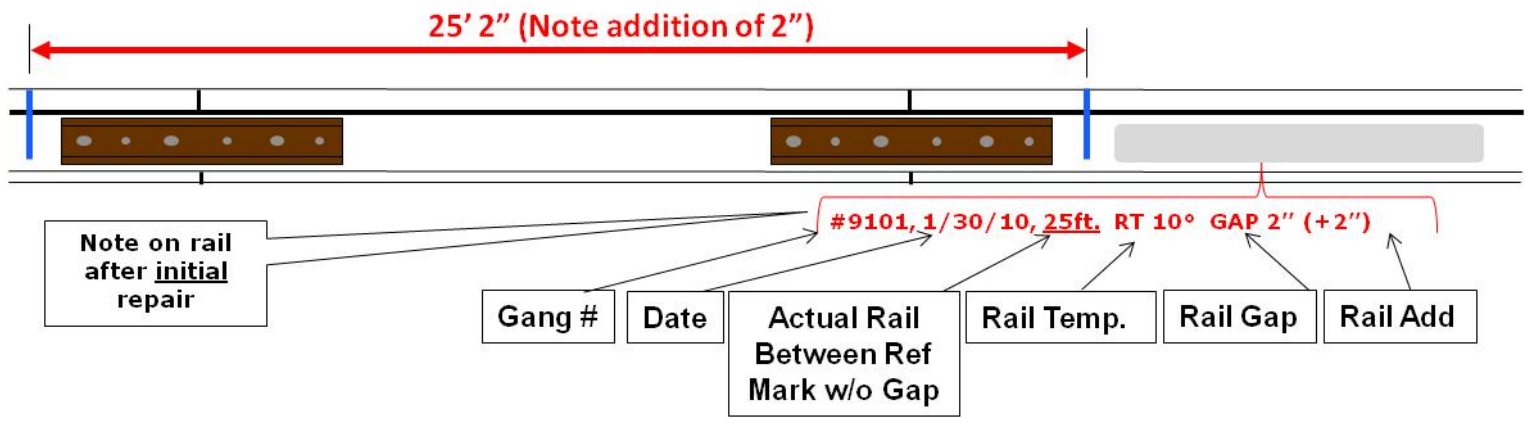

Figure 7-E-2

Example: Spanning Reference Marks – Service Failure

Here is an example of using spanning reference marks for a rail service failure with temporary joint bars. Since this is less than 80 feet, this is a CWR Adjust event.

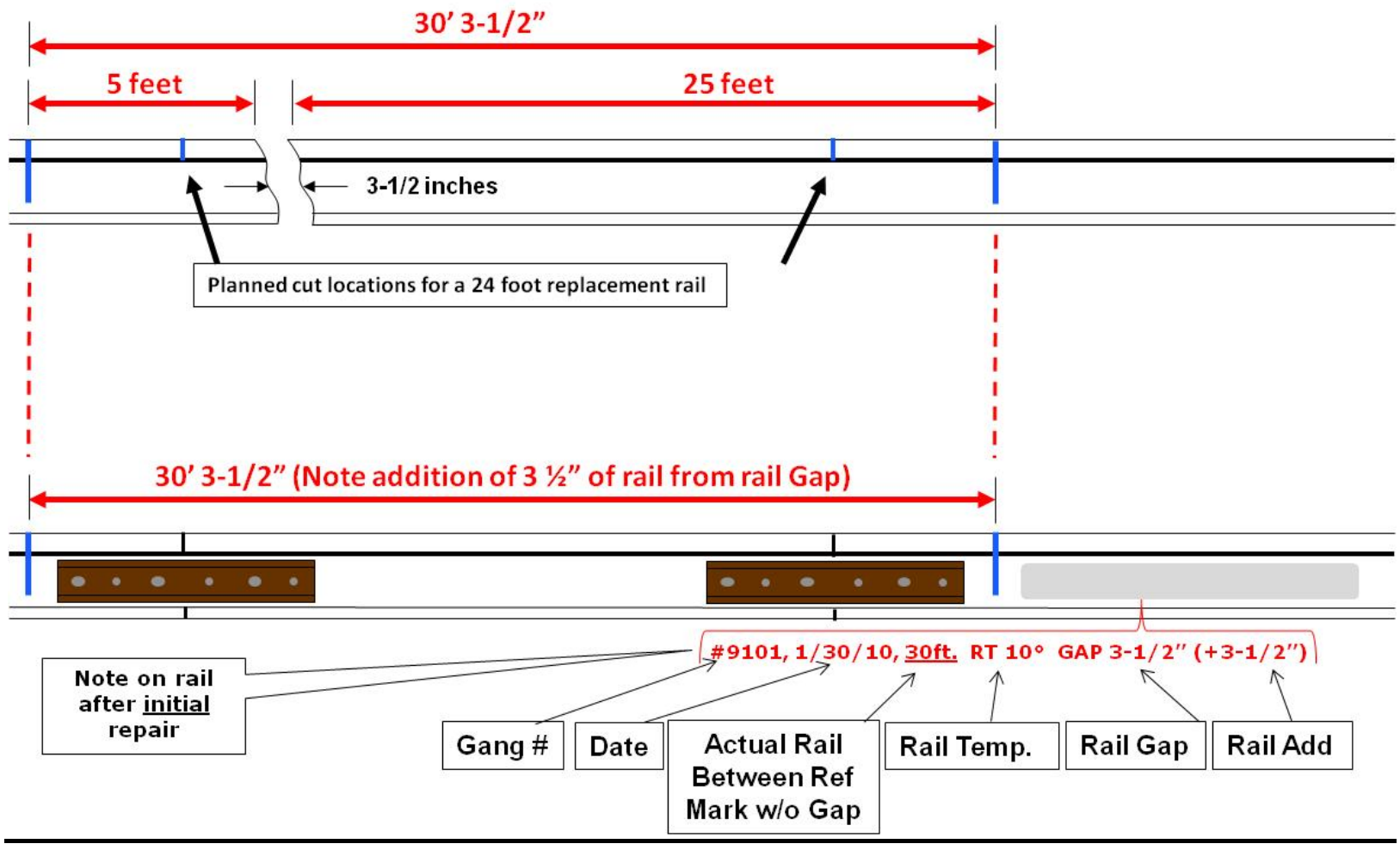

Figure 7-E-3

7.9.4 Placing Pull Back Reference Marks

Pull back reference marks are used for rail changed out that is greater than 80' or less than or equal to 360'and track panels that are greater than 80' or less than or equal to 360' Pull back reference marks are used with the Cut-in/Cut-out process and provides a method of controlling the amount of rail added or subtracted in CWR track. As rail is adjusted in CWR track, pull back reference marks serve as a benchmark to go back and measure against. The intent when performing a cut-in/cut-out is to return the track to the prior neutral temperature. Pull back reference marks must be utilized prior to cutting the CWR.

Use the following guidelines when making pull back reference marks:

1. Place spanning reference marks outside of cuts on outside web of the rail.
   a. Use a permanent white metal marker or paint stick (Item Number 410-4358) to mark rail and tie plate.
2. Place "pull back reference marks" on each end of work area prior to cutting rail or removing joint bars. Mark pull back reference marks on the outside rail base and continue onto the tie plate.
3. De-anchor or de-clip the tie on both rails that the pull back marks are made on.

Record Pull Back Reference Mark Information

In an effort to capture and record certain required information pertaining to work performed, it is important that all information be properly placed on the outside web of rail with a paint stick (Item Number 410-4358).

- After the final adjustment has been made, write the following completion information**:** ***CMPL, gang number, date of final adjustment and rail removed if any. Record "(0)" if no rail removed***

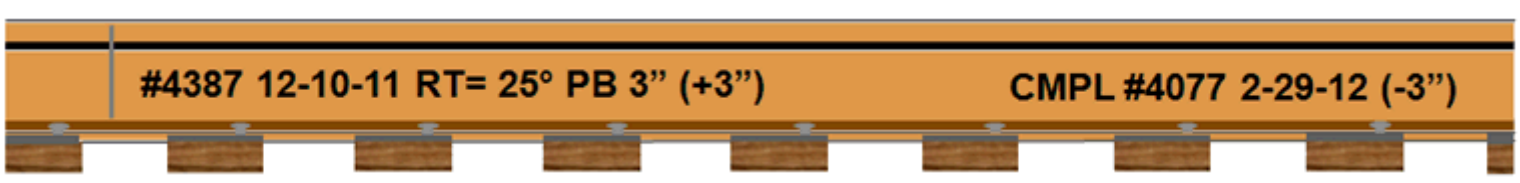

Figure 7-F-1

Example: Pull Back Reference Marks – Rail > 80' and less than 360'

Here is an example of using pull back reference marks for replacing a rail that is greater than 80 foot and less than or equal to 360 foot.

In this example there are 4 inches of pull back on one end and 2 inches of pull back on the opposite end. To get the track back together there was rail added, so the there is rail added that will need to be taken out.

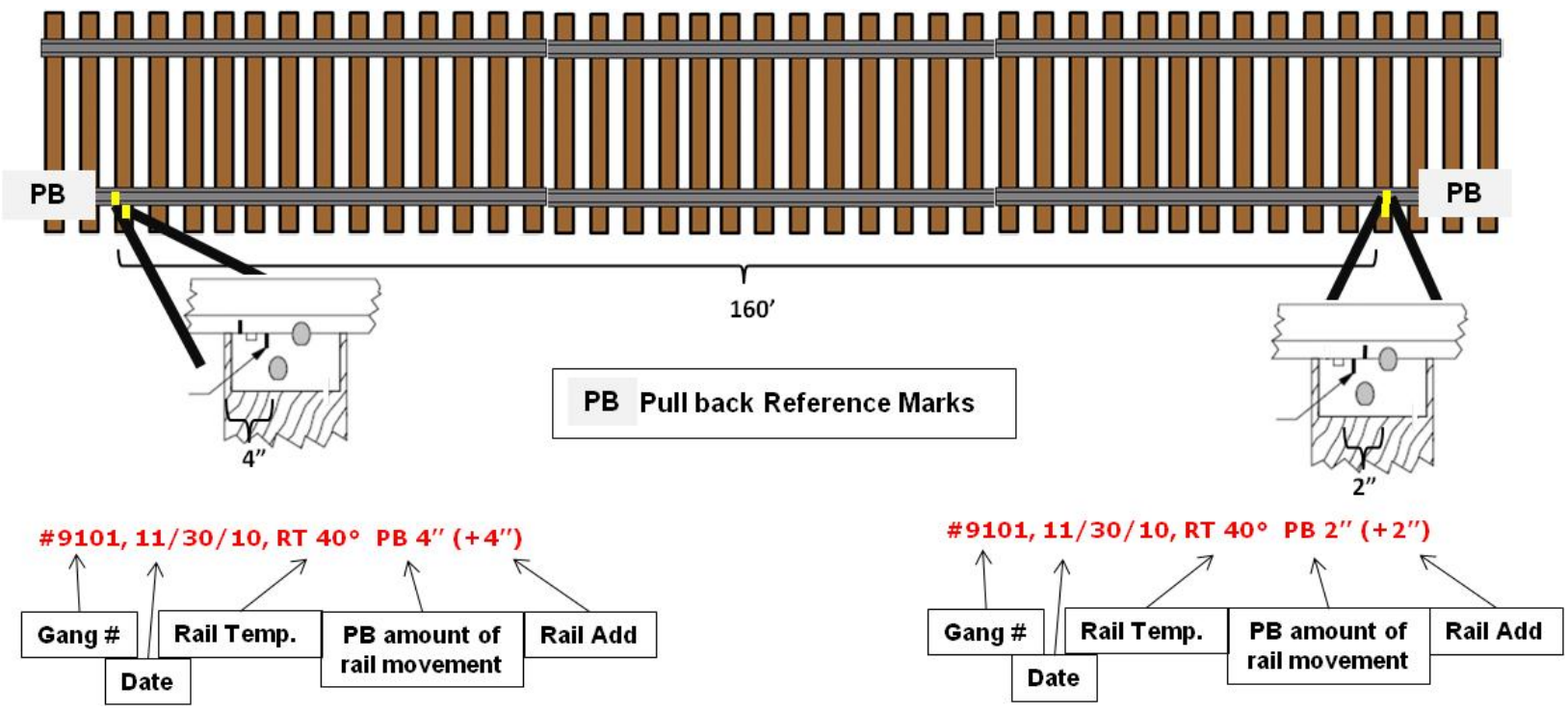

Figure 7-F-2

7.9.5 Maintaining Desired Rail Neutral Temperature Range

A record of rail neutral temperature will be maintained where rail has pulled apart, broken or been cut for defect removal. Because these events are less than 80' they are remediated using CWR Adjust. Required information for reporting service failures (broken rails) are the following:

- Tie type (wood or concrete).
- Anchor pattern (every tie anchored ETA or every other tie anchored EOTA).
- Rail temperature (at time of break upon arrival).
- Initial gap width (measured gap opening between rail ends at break).
- Rail base size (5 ½" or 6").
- Rail Laying Temperature for subdivision (Table 7-J).
- Ballast condition (frozen or not).

Rail that has pulled apart, broken or been cut for defect removal must be readjusted to within the subdivision rail laying temperature minus 10° (RLT-10°) safe range. If the rail has not been readjusted to at least RLT -10° before rail temperatures exceed the values in the Table 7-I-1 below, a speed restriction of 25 mph will be placed, or a speed restriction of 40 mph will be placed with a required daily inspection made during the heat of the day.

Note: At derailment locations where track panels have been installed, Table 7-I-1 may be applied.

Rail break or cut temperature (°F)	Rail temperature (°F) at which to readjust or apply slow order
60	135
50	130
40	125
30	120
20	115
10	110
0	105
-10	100
-20	95
-30	90
-40	85

Table 7-I-1

After October 9, 2009 known rail neutral temperature locations not adjusted to within RLT -10° safety range must ultimately be adjusted within 365 days of installation.

7.9.6 Rail Neutral Temperature Re-adjustment

Section 7.9.5 Maintaining Desired Rail Neutral Temperature Range, requires rail that has pulled apart, broken or been cut for defect removal must be re-adjusted to within the subdivision rail laying temperature minus 10° (RLT-10°) safe range. The two methods for rail re-adjustment are:

- **With CWR-Adjust Calculations (The CWR Adjust method includes the use of the TMP, CWR-Adjust Software or service failure call desk. It also includes the use of the RNT Pull Cards).**

Note: The CWR-Adjust Software is the most accurate rail adjustment tool since it takes into account tie type, anchor condition, rail temperature at the break, amount of gap at rail break, rail size, rail laying temperature and ballast condition. This methodology is accepted by FRA and the industry as accurate, scientific calculations to determine the Rail Neutral Temperature or safe range of the rail. For expedited use in the field, CWR-Adjust Pull Cards were developed from the same software making a few assumptions that re-adjust the rail close to the software. Also note the Pull Cards DO NOT account for rail removal for welds.

- **Without CWR-ADJUST calculations (examples of when this might be the case).**
  - **When rail breaks or defects are clustered in close proximity to each other.**
  - **When rail breaks or defects are near "fixed" structures (i.e. turnouts, diamonds, open deck bridges, road crossings, etc).**
  - **Track panels at derailment sites where multiple track panels have been installed.**

When re-adjusting rail without the use of CWR-adjust determine the Temperature Differential (the difference between the existing rail temperature and the RLT in Table 7-J) and remove the prescribed rail as outlined in Table 7-I-2 below.

Temperature Differential Table for Maintenance Adjustments

Temperature Differential (°F)	Amount of Adjustment Required (Inches) for a Length of Unfastened CWR						
	390 ft	450 ft	500 ft	550 ft	600 ft	650 ft	700 ft
5	1/4	1/4	1/4	1/4	1/4	1/4	1/4
10	1/4	1/4	1/4	1/2	1/2	1/2	1/2
15	1/2	1/2	1/2	1/2	3/4	3/4	3/4
20	1/2	3/4	3/4	3/4	1	1	1
25	3/4	1	1	1	1-1/4	1-1/4	1-1/4
30	1	1	1-1/4	1-1/4	1-1/2	1-1/2	1-1/2
35	1	1-1/4	1-1/2	1-1/2	1-1/2	1-3/4	2
40	1-1/4	1-1/2	1-1/2	1-3/4	2	2	2-1/4
45	1-1/2	1-1/2	1-3/4	2	2	2-1/4	2-1/2
50	1-1/2	1-3/4	2	2-1/4	2-1/4	2-1/2	2-3/4
55	1-3/4	2	2	2-1/2	2-1/2	2-3/4	3
60	1-3/4	2	2-1/4	2-1/2	2-3/4	3	3-1/4
65	2	2-1/4	2-1/2	2-3/4	3	3-1/4	3-1/2
70	2-1/4	2-1/2	2-3/4	3	3-1/4	3-1/2	3-3/4

Table 7-I-2 (Table 7-I refers to this as CWR Adjustment Table 4-H)

7.9.7 Cold Weather Rail Neutral Temperature Readjustment

When adjusting rail neutral temperature during cold weather, the temperature and track conditions may not allow adequate adjustment. The following procedures provide some guidelines when making cold temperature rail repairs and subsequent rail neutral temperature (RNT) readjustments. The following cold weather readjustment procedures are based on the measured rail gap width and the rail temperature at the time of the break. Remember to record all pertinent information as outlined in Section 7.9.5 Maintaining Desired Rail Neutral Temperature Range.

The pre-break/cut RNT is in the RLT-10°F range or above.

- Use the measured gap width along with the measured rail temperature to determine the RNT at the time of the break. This is done by using CWR Adjust (**CWR Adjust includes the use of the TMP, CWR-Adjust Software, RNT Pull Cards or Service Failure Reporting Call Desk**).
- If the calculated RNT from the pull-card is within **RLT-10°F** you can pull the rail back together making your permanent repair. Make sure you account for the rail gap with the weld.

The pre-break/cut RNT is below RLT-10°F.

- Use the measured gap width along with the measured rail temperature to determine the RNT at the time of the break. This is done by using CWR Adjust (**CWR Adjust includes the use of the TMP, CWR-Adjust Software, RNT Pull Cards or Service Failure Reporting Call Desk**).
- If you are not within the safe range of **RLT-10°F** you need to make additional rail adjustments.
- Use CWR Adjust (TMP, CWR Adjust software, Pull Cards or Service Failure Reporting Call Desk) to acquire the prescribed rail adjustment needed.
- If performing final repair, make the prescribed rail adjustment needed plus the rail gap needed for the weld.
- If performing a temporary repair by installing a plug rail or using joint bars, then it would be required to return to make final repairs. Refer to Section 7.9.5 Maintaining Desired Rail Neutral Temperature Range and Table 7-I-1 to determine the temperature at which to have the repair made or applicable slow order applied. When performing final repair, use CWR Adjust and make the prescribed rail adjustment plus the rail gap needed with the weld.

Special cases when CWR-Adjust or Pull-Cards are not applicable

There are special cases and conditions when CWR-Adjust or Pull-Cards are NOT applicable. These include:

(1) Breaks/defects proximity to each other.

- If the defects/breaks are 800 feet or more apart, apply CWR-Adjust or Pull-Cards.
- If the defects/breaks are closer than 800 ft, CWR-Adjust or Pull-Cards do not apply. In this case apply the second bullet "**Without CWR-Adjust calculations"** from Section 7.9.6 Rail Neutral Temperature Re-adjustment to each location independently.

(2) Breaks/defects are near "fixed" structures.

- When breaks/defects occur within 400 feet of a rigid structure (switches, crossings, bridges, etc.), CWR-Adjust or Pull-Cards do not apply. In such cases apply the second bullet "**Without CWR-Adjust calculations"** from Section 7.9.6 Rail Neutral Temperature Re-adjustment. When adjusting rail "without CWR-Adjust" the 195 ft of unfastening requirement in the direction of the rigid structure can be relaxed (i.e. unfasten the maximum length of rail available on that side, but retain the 195 ft on the other side).

7.9.8 De-Stressing Rail

De-stressing is a procedure that is used to reduce high longitudinal stress in CWR which readjusts the neutral temperature to the specified value. This procedure is followed when high compressive forces (as exhibited by tight, wavy, kinky or running rail conditions) exist or as a preventive measure. This procedure typically involves cutting rail out, unfastening a prescribed length of rail, refastening and welding. This activity should be performed from March through June as preventive maintenance, and from July through October as maintenance dictates. When de-stressing rail at any location, generally *both* rails should be de-stressed unless otherwise noted.

There are two different conditions that warrant de-stressing rail:

A. When broken rail service failures were repaired or detector car defects were removed during cold weather and a temporary repair required adding rail.
B. When high compressive forces exist in the rail as evidenced by tight, wavy, kinky or running rail.

If Condition A applies, refer to Sections 7.9.5 Maintaining Desired Rail Neutral Temperature Range and 7.9.6 Rail Neutral Temperature Readjustment.

If Condition B applies, follow the procedures below. In this case both rails need to be de-stressed, unless instructed otherwise.

Note: The recommended de-stressing temperatures should not be more than 40°F below the territory's laying temperature.

Procedure

1. Apply reference marks, see Section 7.9.2 Placing Reference Marks.
2. Cut rail, refer to Section 4.12 Field Welding for torch cutting rail to relieve compression.
3. Remove anchors or fasteners for a minimum of 120 ties (195') both directions from the location that are to be de-stressed.

Note: Remember, this is a minimum. The distance depends on how much rail needs to be adjusted.

4. Wait until the rails stops moving. (The rail ends may need to be trimmed more than one time to allow for expansion).
5. Take the rail temperature.
6. Use the "Rail Laying Temperatures for Continuous Welding Rail" (Table 7-J) to compare the rail temperature with the rail laying temperature for the territory. This is known as the temperature differential.
7. If the actual rail temperature is lower than the rail laying temperature for the territory, determine the rail length to be removed based on the total distance the anchors have been removed. Use the "Continuous Welded Rail Adjustment Table" (Table 7-I-2).
8. If the rail temperature is above the rail laying temperature, no additional adjustments are needed.
9. Proceed to de-stress the other rail.

7.9.9 Managing Cut-in/Cut-out CWR

The Cut-in/Cut-out process is used to manage the neutral temperature of rail replacement and track panel installation greater than 80' and less than or equal to 360'. Pull back reference marks are used with the Cut-in/Cut-out process and provide a method of controlling the amount of rail added or subtracted in CWR track. As rail is adjusted in CWR track pull back reference marks serve as a benchmark to go back and measure against. The intent when performing a cut-in/cut-out is to return the track to the prior neutral temperature, when the CWR occurred. Pull back reference marks must be utilized prior to cutting the CWR.

Reviewing the Cut-in/Cut-out database provides a resource to identify locations where rail has been added during the winter and needs to be removed before warm temperatures occur.

7.9.10 Monitoring Curve Movement

Track buckles are more likely to occur in track with poor surface and line.

Lining and surfacing of curves can lead to a track buckle if not done properly. On Class 2 main tracks or higher, curves 3 degrees and greater must be staked. These stakes must be clearly marked and must be used to monitor any curve movement. For reference stakes use 5/8” diameter x 18” long rebar. The rebar should be painted fluorescent green in order to be easily spotted.

The following examples are to be used to identify when, where and how to stake these curves.

A. Surveyors

1. Stake curves on Class 2 main tracks and above before performing program concrete and/or undercutting projects.
2. Stake other curves as directed by the Chief Engineer.
3. When complete ballast renewals or track shifts occur, place offset stakes or offset measurements to adjacent track if applicable.
4. Stake curves, at a minimum, at the curve control points: Point of Spiral (PS), Point of Spiral Curve (PSC), Point of Curve Center (PCC), Point of Curve Spiral (PCS), and Point of Tangent (PT) with no more than 200 ft. between stakes throughout the curve as shown in Figure 7-F-3 and described in Table 7-I-3.

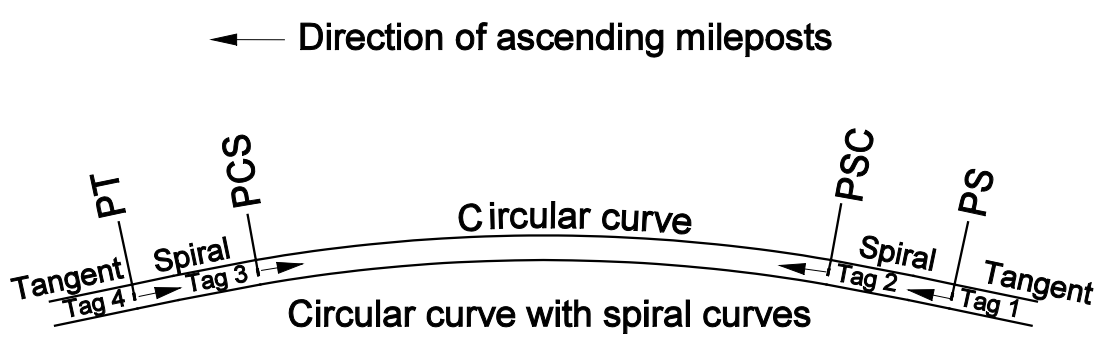

Figure 7-F-3

Curve Marker Identification		
Abbreviation	**Full Name**	**Description**
PS	Point of Spiral	Tangent ends and spiral begins
PSC	Point of Spiral to Curve	Spiral ends and full body begins
PCC	Point of compound curve	Curves that change degree of curvature
PCS	Point of Curve to Spiral	Full body ends and spiral begins
PT	Point of Tangent	Spiral ends and tangent begins

Table 7-I-3

5. Follow instructions in Standard Drawing No. 0015.
6. Record necessary information into the curve database.

B. System Gangs

1. If a curve has been staked by surveyors, line the track to those stakes.
2. If curve is already staked for monitoring of movement, record measurements from stakes to corresponding base of rail prior to and after track work.
   - In locations of complete ballast renewals it is not necessary to record measurements prior to work.
3. If curve is not already staked, center - stake curves 3 degree and over when the rail temperature is more than 50 degrees F. below the designated rail laying temperature or expected to be in the next 24 hours, before surfacing track.

   Example: A curve requires surfacing due to irregular cross level. It is 3 degree 30 minute curve with a rail laying temperature of 105 degrees. Immediately prior to surfacing, the rail temperature is measured to be 48 degrees. Since the curve is over 3 degrees and the rail temperature is more than 50 degrees less than the rail laying temperature for that area (57 degree difference), the curve would require the use of stakes to monitor curve shifting.
4. All curves must be staked after relaying rail. Place at least three stakes in each curve, with one stake in the middle of the curve and the remaining stakes at each heat station.
5. Behind final surfacing pass following program concrete and undercutting work, all curves will be center staked at intervals of 200 feet throughout the entire curve.
6. Behind final surfacing and de-stressing operation following new track construction, all curves will be center staked at intervals of 200 feet throughout the entire curve.

C. Maintenance Forces

1. Ensure all curves in Class 2 Main tracks or higher and 3 degrees and over are staked, either center or offset.
2. When surfacing and lining is performed in a curve already staked, record measurements from stakes to corresponding base of rail prior to and after track work.

3. When surfacing and lining is performed in a curve not already staked, then follow the procedures as set forth in # B-3 above.
4. If a curve has been staked by surveyors, line the track to those stakes.
   a. Inspect for movement during cold temperatures. Additional focus should be given to curve movement during the first 2 weeks after track work especially during periods of large temperature changes.
5. Line out any curve that has inward movement of 2 inches or more prior to rail temperatures above or forecasted above the designated rail laying temperature. If curve is not lined out or destressed and the inward movement is more than 3 inches, a speed restriction of 40 mph or less must be placed.
6. Report when corrections are made through the TMP.

D. Procedures to Place Maintenance Stakes around Curves

1. For center staking (preferred method), use a minimum of five reference stakes.
   - Place one reference stake at the Point of Spiral (PS), Point of Spiral Curve (PSC), Point of Curve Center (PCC), Point of Curve Spiral (PCS), and Point of Tangent (PT).

   Note: Additional stakes may be required due to the overall length of the curve; the spacing between the stakes should be no more than 200'.

   - Mark the rail per Figure 7-G.
2. For offset staking, use a minimum of five reference stakes with 10 to 15 foot offsets.
   - Place reference stakes at the PSC and PCS of the curve.
   - Place at least 3 reference stakes around the curve, uniformly spaced, offset a distance between 10 and 15 feet from the field side of the line rail. The stakes should be spread equally around the curve with one stake placed in the middle of the curve.

   Note: Additional stakes may be required due to the overall length of the curve; the spacing between the stakes should be no more than 200'.

   - Mark the offset and location per Figure 7-H.

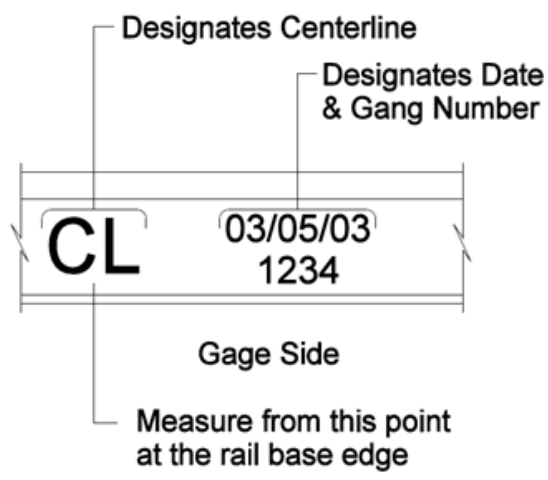

Figure 7-G

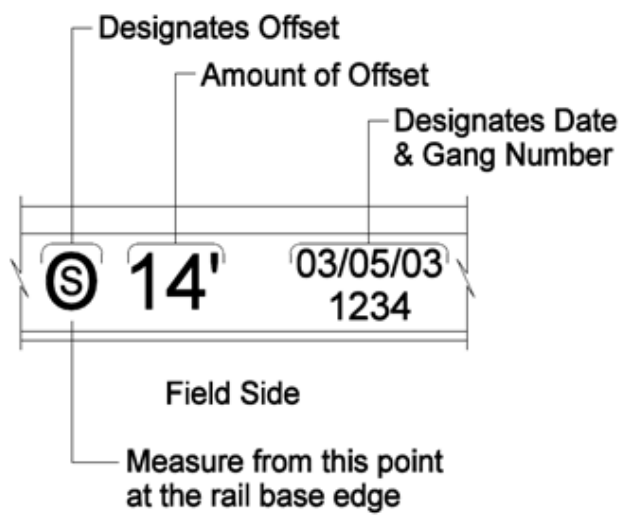

Figure 7-H

E. Non Pre-staked Curves and Cold Weather

For curves that have not been pre-staked, before lining a curve on main tracks, stake curves if the curvature is more than 3 degree and the rail temperatures is more than 50° F below the designated rail laying temperature (or is forecasted to be in the next 24 hours).

7.9.11 Inspecting for Curve Movement

On main tracks, Class 2 tracks and higher, all 3 degree curves and sharper must be inspected for curve movement. Curves should be inspected for curve movement periodically after work and during periods of large temperature changes.

Best Practice: Draw a line from the base of the rail onto the tie plate as a reference mark to monitor rail movement and to aid in track inspection.

7.9.12 Adjusting Curve or Placing Speed Restriction Account of Curve Movement

When a curve has shifted inward more than a maximum of 2 inches, the curve must be lined out prior to rail temperatures above or forecasted above the designated rail laying temperature Refer to 7.10.10 Rail Laying Temperatures for Continuous Welded Rail Table and Blanket Speed Restrictions (Table 7-J) and refer to the column titled Rail Laying Temperatures.

If a curve is not lined out or de-stressed a speed restriction of 40 mph or less must be placed and governed by Section 7.6.1 Hot Weather Inspections.

7.9.13 De-stressing Curves

When a curve has to be realigned or de-stressed, the question of how much rail to cut out of the curve arises. This is a good procedure for adjusting curves. This procedure is dependent on the degree of curvature, curve movement and the length of the curve. The procedure can be used when multiple stations have to be de-stressed.

When curves are aligned back to the pre-movement geometry or adjusted to de-stress the curve, this is not necessarily the target rail neutral temperature. This is the amount of rail to cut out to restore rail neutral temperature to what is was before being aligned or pulled in. De-stressing is required on both rails.

To find the effective amount of rail added to the curve use the following table. This table is based on 1,000 feet of curve length and adjustments are necessary based on the length of the curve. To use the table determine the degree of curvature, curve movement and the length of the curve. When determining the maximum distance that curve has chorded inward, it is necessary to use the maximum central inward movement from the stakes.

		Effective Rail Length Added to Curve/1,000 Feet of Curve (Inches)											
		Distance Curve Has Chorded Inward (Inches)											
		1/2	**1**	**1 1/2**	**2**	**2 1/2**	**3**	**3 1/2**	**4**	**4 1/2**	**5**	**5 1/2**	**6**
Degree of Curvature	**0° 30'**	1/4	1/8	1/8	1/8	1/4	1/4	1/4	3/8	3/8	1/2	1/2	1/2
	1° 00'	1/8	1/8	1/2	3/8	1/2	1/2	5/8	3/4	3/4	7/8	1	1
	1° 30'	1/8	1/4	3/8	1/2	5/8	3/4	7/8	1	1 1/8	1 3/8	1 1/2	1 5/8
	2° 00'	1/8	3/8	1/2	3/4	7/8	1	1 1/4	1 3/8	1 5/8	1 3/4	1 7/8	2 1/8
	2° 30'	1/4	1/2	5/8	7/8	1 1/8	1 3/8	1 1/2	1 3/4	2	2 1/4	2 3/8	2 5/8
	3° 00'	1/4	1/2	3/4	1	1 3/8	1 5/8	1 7/8	2 1/8	2 3/8	2 5/8	2 7/8	3 1/8
	3° 30'	1/4	5/8	7/8	1 1/8	1 1/2	1 7/8	2 1/8	2 1/2	2 3/4	3 1/8	3 3/8	3 5/8
	4° 00'	3/8	3/4	1	1 3/8	1 3/4	2 1/8	2 1/2	2 3/4	3 1/8	3 1/2	3 7/8	4 1/8
	4° 30'	3/8	3/4	1 1/8	1 5/8	2	2 3/8	2 1/2	3 1/8	3 1/2	4	4 3/8	4 3/4
	5° 00'	1/2	7/8	1 3/8	1 3/4	2 1/4	2 5/8	2 3/4	3 1/2	4	4 3/8	4 3/4	5 1/2
	5° 30'	1/2	1	1 1/2	1 7/8	2 1/2	2 7/8	3 3/8	4	4 3/8	4 7/8	5 1/4	5 3/4
	6° 00'	1/2	1	1 5/8	2 1/8	2 3/4	3 1/8	3 5/8	4	4 3/4	5 1/4	5 3/4	6 1/4
	6° 30'	1/2	1 1/8	1 3/4	2 1/4	2 3/4	3 3/8	4	4 1/2	5 1/8	5 3/4	6 1/4	6 7/8
	7° 00'	1/2	1 1/4	1 7/8	2 1/2	3	3 5/8	4 1/4	5	5 1/2	6 1/8	6 3/4	7 3/8
	7° 30'	1/2	1 3/8	2	2 5/8	3 1/4	4	4 5/8	5 1/2	5 7/8	6 5/8	7 1/4	7 7/8
	8° 00'	1/2	1 3/8	2 1/8	2 3/4	3 1/2	4 1/4	4 7/8	5 1/2	6 1/4	7	7 3/4	8 3/8
	8° 30'	1/2	1 1/2	2 1/4	3	3 3/4	4 1/2	5 1/4	6	6 3/4	7 1/2	8 1/8	8 7/8
	9° 00'	1	1 5/8	2 3/8	3 1/8	4	4 3/4	5 1/2	6 1/2	7 1/8	7 7/8	8 5/8	9 1/2
	9° 30'	1	1 5/8	2 1/2	3 3/8	4 1/4	5	5 7/8	6 1/2	7 1/2	8 3/8	9 1/8	10
	10° 00'	1	1 3/4	2 5/8	3 1/2	4 1/2	5 1/4	6 1/8	7	7 7/8	8 3/4	9 5/8	10 1/2
	10° 30'	1	1 7/8	2 3/4	3 5/8	4 1/2	5 1/2	6 3/8	7 1/2	8 1/4	9 1/4	10 1/8	11
	11° 00'	1	1 7/8	2 7/8	3 7/8	4 3/4	5 3/4	6 3/4	7 1/2	8 5/8	9 5/8	10 5/8	11 1/2

ΔS (in) = δ (in) x Deg x 0.0175 x curve length(ft)/100(ft)
ΔS (in) = Effective rail length added to curve (inches)
δ (in) = Maximum distance curve has chorded inward (inches)
Deg = Degree of curvature

Here are some examples for using this table.

Example

A 5 degree curve that measures 1,000 ft in length and has a measured distance that the curve chorded inward is 5 inches.

- Rail length added is 4.375 inches.

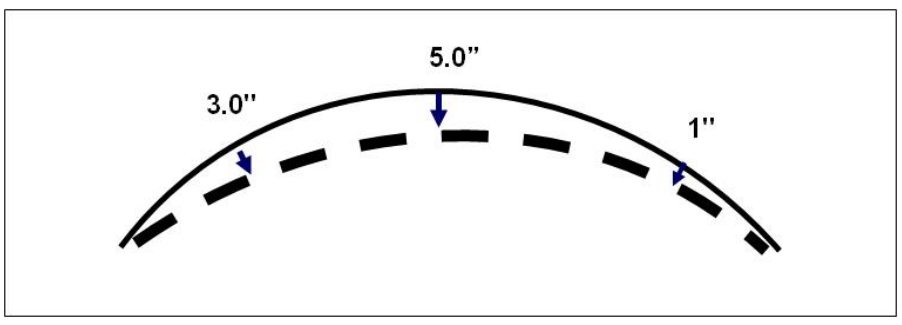

Example

A 5 degree curve that measures 600 ft in length and has a measured distance that the curve chorded inward of 3.75 inches.

- Since the measured distance that the curve chorded inward falls between the two 3.5 inches and 4.0 inches. Then 3.25 inches can be used.
- Since the table is based on a1,000 foot curve length and the curve is 600 feet, it is necessary to multiply the 3.25 inch by .6.
- Rail length added is 1.95 inches.

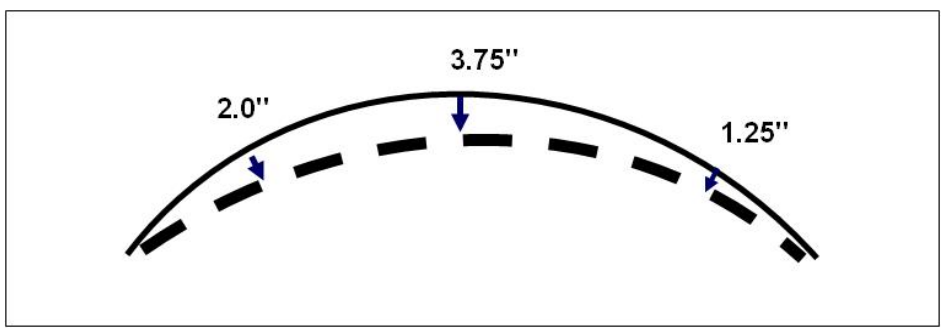

Example

A 5 degree curve that measures 2,000 ft in length and has a measured distance that the curve chorded inward of 4.0 inches.

- The table shows a 3.5 inches of rail length added.
- Since the table is based on a 1,000 foot length and the curve is 2,000 foot long, it is necessary to multiply the 3.5 inch by 2.
- Rail length added 7.0 inches.

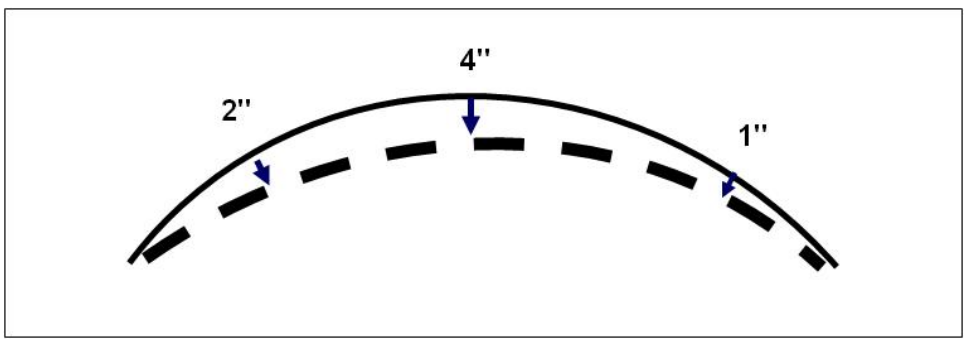

7.9.14 Adjusting Anchors

The best time to adjust anchors is when it is cold and the rail is in tension. The recommended months to adjust anchors are: November, December, January or February.

The U.P. standards for anchoring are found on Standard Drawing Nos. 0460 and 0461 or in Section 4.17 Rail Anchors.

Adjust anchors by following these guidelines:

- Bring the track up to standard by installing the correct number of anchors.
- Replace the missing anchors.
- Adjust the anchor so it is bearing tight against the tie.

7.9.15 Eliminating Joints

Eliminate joints by following these guidelines:

- Use reference marks.
- Cut out the length of field weld that will be added: If using a standard gap weld, cut out 1 inch of rail to allow for the field weld. If using a wide gap weld, cut out 2 ¾ inches of rail.
- Refer to Section 4.12 Field Welding for minimum required spacing between field welds and plant welds.

7.9.16 Gauging Track

The increased lateral forces caused by wide gage can contribute to causing a track to buckle. Use caution in the summer months when the rail is in compression and could buckle if a large section of rail is gauged at one time. In winter months, use caution when gauging high side of curve as rail will tend to pull down.

7.10 Reporting Track Buckling Activities

7.10.1 Reporting Maintenance Work in CWR

Track maintenance can disturb the lateral and longitudinal resistance of the track structure, records must be kept until corrections or adjustments are made for the follow maintenance events:

- Repair of service failed rail, defective or damaged rail that has been removed, rail that has been cut for detector car defect repair, pulled apart rail, or welding of rail joints.
- Curves that have experienced inward movement more than a maximum of 2 inches from the curve reference stakes.

A record of CWR adjustment will be maintained for locations that experience: service failed rail, defective or damaged rail that has been removed, rail that has been cut for detector car defect repair, pulled-apart rail, or welding of rail joints.

Director Track Maintenance and Manager Track Maintenance must monitor these records to ensure necessary corrections and adjustments are made.

7.10.2 Report Rail Service Failed Broken Rail

A. Service Failure Broken Rail Reporting

Definition: A service failed broken rail is defined as an unexpected break in the rail, usually in two or more pieces with separation **OR** rail with a substantial portion of the rail head, web or base missing.

When service failed broken rails occur, collect information contained in Engineering OE Production Log ***(Form: PB-24021)***. Following repair or replacement of the broken rail, report the service failure by one of the following means:

1. **Service Failure Reporting Call Desk** – via a phone call to desk personnel
   - Toll Free Phone: (855) 816-7511
   - Fax: (402) 501-1739
   - Email: SF Desk (using Lotus Notes) or sfdesk@up.com (outside email)
2. **TEP (Time Entry Portal) – OE Production Reporting** using the correct Work Codes for each failure type.
3. **Track Maintenance Planner (TMP)**, – Web base reporting, *Go to:* ***Engineering > Track Maintenance > Manage > Service Failure (Broken Rail)***

Using a digital camera, capture pictures of the rail while still in track and pictures of each full rail end. Email photos to: sfdesk@up.com. When sending pictures, include: Fail date, Subdivision, Track, milepost (including decimal) and rail side (Left or Right). Provide a contact with phone number for follow-up questions.

When broken rail failures occur within 30 days or within 1 MGT of the last detector car test, secure and store fractured rail ends. Using a permanent metal marker, write the following information on the rail: Fail date, Subdivision, Track, milepost (including decimal) and rail side (Left or Right). Store rail at a location designated by Manager Track Maintenance until inspected by Rail Assessment Group manager, or Rail Test Operator.

B. Broken Rail Derailment Reporting

When a derailment is being investigated and the cause is not readily apparent and a broken rail cannot be ruled out immediately, collect and include the following information in derailment reporting.

1. Rail section (weight), Manufacture, Year/Month rolled, Standard/Premium, and rail heat number (including ingot number, "A" rail etc.).
2. Rail profile, head width and height. (Approximate gage face loss and height loss).
3. Rail condition, running surface. (shell, head checks, slivers, grease, rust or recently ground).
4. If broken rail is entered as the cause of the derailment, rail shall be sent to the: R & D Lab; 5697 N. 13th St.; Omaha, NE 68110. In addition, a SERVICE FAILURE report must be completed in the TMP, within 7 days, *Go to:* ***Engineering > Track Maintenance > Manage > Service Failure (Broken Rail)*** to find report form.

7.10.3 Report Rail Pull-aparts

When two rails pull-apart (separate) at a joint location, this is reported as a pull-apart. When pull-aparts occur, collect all information required on Engineering OE Field Reporting Log PB-24021. Use this information and complete a Service Failure report via one of the following means:

- Service Failure Reporting Call Desk – via a phone call to desk personnel. Reference Section 4.17.11 Broken Rail Derailment Reporting.
- OE Production - TEP production reporting, using EPM174 (UNPLANNED OE MAINTENANCE TASK(S) and: Work code: M60B (Depending on defect class: DF, BH, VSH, etc.).
- Track Maintenance Planner (TMP), – Engineering Website base reporting. Select the Manager tab and then select the Pull-apart Defect (Stripped Joint), located in the center column, under the label Defect Management Create Defects.

Pull-aparts are to be reported by only one employee.

7.10.4 Report Maintenance Rail Replacement

When rail has been cut to repair a detector car defect, report via the TEP, OE Production reporting system.

- Report using EPM174 (Repairing Detector Car Defects) and Maintenance Work code: M50 when defect is UNPLANNED (Same day as detector car, defect not yet uploaded by the detector car).
- Report using EPM173, when defect repair is PLANNED and task has been assigned to the gang by the manager.

7.10.5 Report Cut-in/Cut-out Maintenance Rail

Rail change out or track panels changed out that are greater than 80'or less than or equal to 360' should be reported through the cut-in/cut-out process. All rail that has been either added or subtracted from the track should be recorded using the Engineering OE Production Log Form PB-24021, and then reported using Gang OE Production Reporting or Go to: TMP > Manage > Defect Management. Select the Manage tab. In the center column under the label Defect Management Create Defects, select the Create Rail Cut-Ins, Cut-Outs and left click the mouse.

7.10.6 Welding Gangs

Welders performing other than normal maintenance welding will refer to CWR Adjust or Cut-in/Cut-out procedures depending on the CWR event. Refer to 7.9.1 Managing CWR Events.

7.10.7 Report Curve Movement

Because maintenance performed on curves disturbs the lateral and longitudinal resistance of the track, the track could shift inward during cold weather. To monitor the impact of these curves that have moved inward and correct them, use the following guidelines:

- Report inward lateral curve movement through TMP, TI System or Production Reporting.

  Note: This is the measured deviation in inches from the reference stakes. See Section 7.9.10 Monitoring Curve Movement.

- Line out any curve that has inward movement of two inches or more prior to hot weather.
- Report corrections through the TMP, TI System or Production Reporting.

7.10.8 Reporting Track Buckling Incidents

When a track buckle occurs, this information needs to be reported through the Engineering Track Maintenance Planner (TMP). Select the Manage tab. In the center column under the label Defect Management Create Defects, select the Track Buckle and left click the mouse.

For Reporting Purposes:

A track buckling incident occurs when rail temperatures are relatively high and there are high longitudinal compressive forces present in the rail, which results in:

- A lateral misalignment of > 5" on tangent and curve track.
- An upward vertical misalignment of > 2" on all tracks.

Do not report the following:

- Track buckles that occur at a location where gangs are actively working.

  Note: If a buckle occurs after the gang gives the track back it should be reported.

- Curves moving inward or outward as a track buckle, unless there is an actual lateral misalignment.

7.10.9 Required CWR Documentation

Required to have the following current revision of CWR procedures available for installation, maintenance, adjustment and inspection of CWR:

- Updated Engineering Track Maintenance Field Handbook – ***Chapter 7 Track Buckling Prevention, Chapter 4 Rail and Joints and Chapter 8 Track Inspection Requirements***.
- Procedures for the ***Installation, Adjustment, Maintenance and Inspection of CWR*** as required by 49 CFR 213.119 - This document details the Railroad's policy on installing, adjusting, maintaining and inspecting Continuous Welded Rail (CWR) track. Each chapter details how the Railroad applies its standards and procedures to comply with FRA standards. The following requirements apply to CWR on all main tracks and sidings. These requirements also apply to all tracks other than main tracks or sidings operating at speeds above Class 1. The effective date of this document is October 09, 2009. The item number is PB-21968.

7.10.10 Rail Laying Temperature for Continuous Welded Rail Table and Blanket Speed Restrictions

Use Table 7-J for blanket speed restrictions and rail laying (neutral) temperatures for subdivisions with maximum speed greater than 40 MPH. If subdivision is not listed in Table 7-J, refer to latest revision on Standard Drawing No. 0045 to determine appropriate rail laying temperature.

Subdivision	Station		Rail Laying Temp. Deg. (F)	Rail Temperature for Speed Restriction behind Track Work Deg. (F)	Blanket Heat Speed Restriction (Level 1) Deg. (F)	Blanket Heat Speed Restriction (Level 2) Deg. (F)	First Event Cold Weather Inspection Temp. Deg. (F)	Cold Weather Inspection Temp. Deg. (F)	Rapid Temperature Drop of 40 F or More Below Temp. Deg. (F)
Adams	Adams	BJ South	95	105	85	95	10	-5	55
Alameda Corridor	East Redondo	W. Thenard	115	125	105	115	30	15	75
Albert Lea	S St Paul	Mason City	95	105	85	95	10	-5	55
Alexandria	Willow Glenn	Livonia	115	125	100	110	30	15	75
Alhambra	W Colton	Yuma Jct.	115	125	105	115	30	15	75
Altoona	W. Minster	Adams	95	105	85	95	10	-5	55
Angleton	Algoa	Bloomington	115	125	100	110	30	15	75
Austin	Hearne	Tower 105	115	125	100	110	30	15	75
Avondale	W Bridge Jct	BNSF Conn	115	125	100	110	30	15	75
Ayer	Fish Lake	Hinkle	100	110	90	100	15	0	60
Baird	Ft Worth	Sweetwater	115	125	100	110	30	15	75
Beaumont	Livonia	Glf. Coast Jct	115	125	100	110	30	15	75
Belvidere	W Chicago	End of Track	100	110	90	100	15	0	60
Black Butte	Klamath Falls	Dunsmuir	100	110	90	100	15	0	60
Blair	E MO Valley	Fremont	100	110	90	100	15	0	60
Boone	Boone	E. Mo. Val.	100	110	90	100	15	0	60
Brinkley	Briark	Brinkley	110	120	100	110	25	10	70
Brooklyn	Portland	Oakridge	100	110	90	100	15	0	60
Brownsville	Bloomington	Brownsville	120	130	105	115	35	20	80
Caliente	Stine	Kyle	105	115	95	105	20	5	65
Caliente	Milford	Brown	100	110	90	100	15	0	60
Caliente	Brown	Stine	105	115	95	105	20	5	65
Caliente	Kyle	Las Vegas	110	120	100	110	25	10	70
Canyon	Portola	Sloat	100	110	90	100	15	0	60
Canyon	Sloat	James	105	115	95	105	20	5	65
Canyon	James	Mitchell Ave	120	130	100	110	35	20	80
Carrizozo	W Vaughn	Ancho	105	115	95	105	20	5	65
Carrizozo	Ancho	Otero	110	120	100	110	25	10	70
Carrizozo	Otero	Tower 47	115	125	105	115	30	15	75
Cascade	Oakridge	Klamath Falls	100	110	90	100	15	0	60
Cherokee	Parsons	Chetopa	105	115	95	105	20	5	65
Cherokee	Chetopa	McAlester	110	120	95	105	25	10	70
Chester	Valley Jct	Charlestn Jct	105	115	95	105	20	5	65
Choctaw	McAlester	Denton	110	120	95	105	25	10	70
Choctaw	Denton	N. Tower 55	115	125	100	110	30	15	75
Cima	Las Vegas	Yermo	125	135	110	120	40	25	85
Clinton	Clinton	Boone	100	110	90	100	15	0	60
Coast	S.Luis Obispo	Mulford	110	120	100	110	25	10	70
Coffeyville	Leeds Jct	Coffeyville	105	115	95	105	20	5	65
Columbus	Fremont	Grand Island	100	110	90	100	15	0	60
Col Springs	Denver	Pueblo	100	110	90	100	15	0	60
Corpus Christi	Sosan	Corp. Christi	120	130	105	115	35	20	80
Corsicana	Big Sandy	Corsicana	115	125	100	110	30	15	75
Craig	Phippsburg	Axial	90	100	80	90	5	-10	50
Cuero	West Point	Placedo	115	125	100	110	30	15	75
Dallas	Longview	Centen.Yd	115	125	100	110	30	15	75
Del Rio	Del Rio	San Antonio	120	130	105	115	35	20	80
Desoto	St Louis	4th Street	105	115	95	105	20	5	65
Duncan	Chickasha	Sunray	110	120	100	110	25	10	70
Duncan	Sunray	Tower 60	115	125	100	110	30	15	75
Elko	Elko	Winnemucca	105	115	95	105	20	5	65
Enid	Caldwell	Chickasha	110	120	95	105	25	10	70
Enid	Caldwell	Wichita	110	120	95	105	25	10	70
Ennis	Miller Yd	Hearne	115	125	100	110	30	15	75
Evanston	Green River	Ogden	95	105	85	95	10	-5	55
Eureka	Eureka	Navasota Jct.	115	125	100	110	30	15	75
Fairmont	Butterfield	Mason City	95	105	85	95	10	-5	55
Falls City	Offutt	Hiawatha	100	110	90	100	15	0	60
Falls City	Hiawatha	Edgewater	105	115	95	105	20	5	65
Giddings	Hearne	West Point	115	125	100	110	30	15	75
Fresno	Bakersfield	Elvas	120	130	105	115	35	20	80
Ft Worth	Midlothian Jct	Valley Jct	115	125	100	110	30	15	75

Subdivision	Station		Rail Laying Temp. Deg. (F)	Rail Temperature for Speed Restriction behind Track Work Deg. (F)	Blanket Heat Speed Restriction (Level 1) Deg. (F)	Blanket Heat Speed Restriction (Level 2) Deg. (F)	First Event Cold Weather Inspection Temp. Deg. (F)	Cold Weather Inspection Temp. Deg. (F)	Rapid Temperature Drop of 40 F or More Below Temp. Deg. (F)
Galveston	GH & H Jct	Galveston	115	125	100	110	30	15	75
Geneva	Chicago	Clinton	100	110	90	100	15	0	60
Gila	PPE Yard	Naviska	120	130	105	115	35	20	80
Gila	Naviska	Yuma	125	135	105	115	40	25	85
Glenwood Spr.	Bond	Glenwd Spr.	90	100	85	95	5	-10	50
Glenwood Spr.	Glenwd Spr.	Grand Jct	100	110	90	100	15	0	60
Glidden	W. Jct.	Kirby	115	125	100	110	30	15	75
Greeley	Speer	Pullman	100	110	90	100	15	0	60
Green River	Maxwell	Helper	95	105	85	95	10	-5	55
Green River	Grassy	Maxwell	100	110	90	100	15	0	60
Green River	Grand Jct	Grassy	105	115	95	105	20	5	65
Harrisburg	Harrisburg Jct	W. Jct.	115	125	100	110	15	30	75
Harvard	End of Subd.	Chicago	100	110	90	100	15	0	60
Hearne	Marquez	Hearne	115	125	100	110	30	15	75
Herington	Herington	Pratt	105	115	95	105	20	5	65
Hiawatha	Hiawatha Jct	Upland	100	110	90	100	15	0	60
Hoxie	Charleston Jct	Corning	105	115	95	105	20	5	65
Hoxie	Corning	N Little Rock	110	120	100	110	25	10	70
Huntington	Oxman	Union Jct	95	105	85	95	10	-5	55
Huntington	Nampa	Oxman	100	110	90	100	15	0	60
Huntington	Union Jct	La Grande	100	110	90	100	15	0	60
Jefferson City	Gratiot St	River Jct	105	115	95	105	20	5	65
Joliet	Chicago	Bloomington	100	110	90	100	15	0	60
Jonesboro	Dexter Jct	Greenway	105	115	95	105	20	5	65
Jonesboro	Greenway	Pine Buff	110	120	100	110	25	10	70
Julesburg	Julesburg	Union	100	110	90	100	15	0	60
Kansas	West Yard	Upland	105	115	95	105	20	5	65
KCT	All Main Trks		105	115	95	105	20	5	65
Kearney	Grand Island	Platte River	100	110	90	100	15	0	60
Kenosha	St Francis	Chicago	95	105	85	95	10	-5	55
Lake Charles	Willow Glenn	Iowa Jct	115	125	100	110	30	15	75
La Grande	La Grande	Duncan	95	105	85	95	10	-5	55
La Grande	Duncan	Hinkle	100	110	90	100	15	0	60
Lafayette	Iowa Jct	Dawes	115	125	100	110	30	15	75
Lakeside	Ogden	Alazon	100	110	90	100	15	0	60
Laramie	Borie/Speer	Laramie	90	100	80	90	5	-10	50
Laramie	Cheyenne	Borie/Speer	95	105	85	95	10	-5	55
Laramie	Laramie	Rawlins	95	105	85	95	10	-5	55
Laredo	Sosan	Laredo	120	130	105	115	35	20	80
Little Rock	N Little Rock	Texarkana	110	120	100	110	25	10	70
Little Rock	Texarkana	Longview	115	125	100	110	30	15	75
Limon	Pullman	Boyero	100	110	90	100	15	0	60
Limon	Boyero	Sharon Springs	105	115	95	105	20	5	65
Livonia	Livonia	Algiers	115	125	100	110	30	15	75
Lockhart	Smithville	AJAX	115	125	100	110	30	15	75
Lordsburg	El Paso	Vail X-Over	115	125	105	115	30	15	75
Lordsburg	Vail X-Over	PPE Yard	120	130	105	115	35	20	80
Los Angeles	Yermo	Daggett	120	130	105	115	35	20	80
Los Angeles	W. Riverside	Bridge Jct	115	125	105	115	30	15	75
Lost Springs	Herrington	Wichita	105	115	95	105	20	5	65
Lufkin	Shreveport	Tower 210	115	125	100	110	30	15	75
Lynndyl	Salt Lake	Milford	100	110	90	100	15	0	60
Mankato	St Paul	St James	95	105	85	95	10	-5	55
Marion	Benton	Vienna Jt	105	115	95	105	20	5	65
Martinez	Martinez	Shellmound	110	120	100	110	25	10	70
Martinez	Roseville	Martinez	120	130	105	115	35	20	80
Marysville	Upland	Gibbon Jct	100	110	90	100	15	0	60
Mason City	Mason City	Des Moines	95	105	85	95	10	-5	55
McGehee	S Pine Bluffs	Bonita	110	120	100	110	25	10	70
McGehee	Bonita	Monroe	115	125	100	110	30	15	75
McHenry	Ringwood	Cryl. Lake J.	100	110	90	100	15	0	60
Memphis	Memphis	Bald Knob	110	120	100	110	25	10	70
Midlothian	Garrett Jct.	Midlothian Jct.	115	125	100	110	30	15	75
Milwaukee	St Francis	Grand Ave	95	105	85	95	10	-5	55
Moffat Tunnel	Winterpark	Phippsburg	90	100	85	95	5	-10	50
Moffat Tunnel	Plain	Winterpark	95	105	85	95	10	-5	55
Moffat Tunnel	Denver	Plain	100	110	90	100	15	0	60
Mojave	Cameron	Marcel	105	115	95	105	20	5	65
Mojave	Mojave	Cameron	110	120	100	110	25	10	70
Mojave	Marcel	Caliente	110	120	100	110	25	10	70

Subdivision	Station		Rail Laying Temp. Deg. (F)	Rail Temperature for Speed Restriction behind Track Work Deg. (F)	Blanket Heat Speed Restriction (Level 1) Deg. (F)	Blanket Heat Speed Restriction (Level 2) Deg. (F)	First Event Cold Weather Inspection Temp. Deg. (F)	Cold Weather Inspection Temp. Deg. (F)	Rapid Temperature Drop of 40 F or More Below Temp. Deg. (F)
Mojave	W Colton	Mojave	120	130	105	115	35	20	80
Mojave	Caliente	Bakersfield	120	130	105	115	35	20	80
Monroe	Monroe	Willow Glenn	115	125	100	110	30	15	75
Montana	Pocatello	Dubois	95	105	85	95	10	-5	55
Montana	Dubois	Barretts	90	100	85	95	5	-10	50
Montana	Barretts	Silver Bow	95	105	85	95	10	-5	55
Mt Vernon	Salem	Chap	105	115	95	105	20	5	65
Nampa	Pocatello	Nampa	100	110	90	100	15	0	60
Navasota	Valley Jct	Spring Jct	115	125	100	110	30	15	75
Nevada	Wesco	Sparks	105	115	95	105	20	5	65
Niles	Newark	Elmhurst	110	120	100	110	25	10	70
N. Fork	Grand Jct.	Hawksnest	100	110	90	100	15	0	60
N Platte T	Platte River	Hindman	100	110	90	100	15	0	60
Oakland	Altamont	Melrose	110	120	95	105	25	10	70
Oakland	Stockton	Alamont	120	130	105	115	35	20	80
Ogden	McCammon	Ogden	100	110	90	100	15	0	60
Omaha	Mo Valley	Fremont	100	110	90	100	15	0	60
Palestine	Longview	Belt Jct	115	125	100	110	30	15	75
Pana	Villa Grove	Findlay	100	110	90	100	15	0	60
Pana	Findlay	Lenox	105	115	95	105	20	5	65
Pana	Lenox	St. Louis	105	115	95	105	20	5	65
Parsons	Parsons	KC	105	115	95	105	20	5	65
Peoria	Nelson	Barr	100	110	90	100	15	0	60
Pequot	Pequot	Mazonia	100	110	90	100	15	0	60
Phoenix	Picacho	Wellton	125	135	105	115	40	25	85
Pickneyville	Chester	Mt Vernon	105	115	95	105	20	5	65
Pine Bluff	Pine Bluff	Stamps	110	120	100	110	25	10	70
Pine Bluff	Stamps	Big Sandy	115	125	100	110	30	15	75
Pocatello	Granger	McCammon	95	105	85	95	10	-5	55
Pocatello	McCammon	Pocatello	100	110	90	100	15	0	60
Portland	Hinkle	Troutdale	100	110	90	100	15	0	60
Portland	Troutdale	E. Portland	100	110	90	100	15	0	60
Portland	Fir	Kenton	100	110	90	100	15	0	60
Port Lavaca	Placedo	West Point	115	125	100	110	30	15	75
Powder River	Horse Creek	Shawnee Jct	100	110	90	100	15	0	60
Pratt	Pratt	Meade	105	115	95	105	20	5	65
Pratt	Meade	Dalhart	110	120	100	110	25	10	70
Provo	Helper	Nar. Xover	95	105	85	95	10	-5	55
Provo	Nar. XOver	Grant Tower	100	110	90	100	15	0	60
Rake	Bricelyn	Esterville	95	105	85	95	10	-5	55
Rawlins	Rawlins	Green River	95	105	85	95	10	-5	55
Reisor	Marshall Jct	Texmo Jct	115	125	100	110	30	15	75
River	River Jct	Rock Creek	105	115	95	105	20	5	65
Roseville	Roseville	New Castle	120	130	105	115	35	20	80
Roseville	New Castle	Switch 9	100	110	90	100	15	0	60
Roseville	Switch 9	Vista	105	115	95	105	20	5	65
Sacramento	Mitchell Ave	Stockton	120	130	105	115	35	20	80
Salem	Findlay Jct	Salem	105	115	95	105	20	5	65
Salina	Menoken	Salina	105	115	95	105	20	5	65
Salt Lake	Ogden	Salt Lake	100	110	90	100	15	0	60
Sanderson	Langtry	Alpine	115	125	100	110	30	15	75
Sanderson	Del Rio	Langtry	120	130	105	115	35	20	80
Santa Barbara	Moor Park	Oxnard	110	120	95	105	25	10	70
Santa Barbara	Oxnard	S.Luis Obisp.	105	115	95	105	20	5	65
Seattle	Seattle	Portland	100	110	90	100	15	0	60
Sedalia	River Jct	KC Un. Sta.	105	115	95	105	20	5	65
Shafter	Smelter	Elko	100	110	90	100	15	0	60
Sharon Spring	Salina	Sharon Sprg.	105	115	95	105	20	5	65
Sharp	Provo	Lynndyl	100	110	90	100	15	0	60
Shreveport	Lewisville	Shreveprt	115	125	100	110	30	15	75
Sidney	Hindman	Cheyenne	100	110	90	100	15	0	60
South Morrill	Ofallons	Horse Creek	100	110	90	100	15	0	60
Smithville	Smithville	Sealy	115	125	100	110	30	15	75
Springfield	Bloomington	Church	100	110	90	100	15	0	60
Spokane	Spokane	Eastport	95	105	85	95	10	-5	55
Tennessee Ps.	Brown Cnyn	Dotsero	90	100	80	90	5	-10	50
Tennessee Ps.	Spikebuck	Brown Cnyn	100	110	90	100	15	0	60
Tennessee Ps.	Na Jct	Spikebuck	105	115	95	105	20	5	65
Terminal	Dawes	West Jct	115	125	100	110	30	15	75
Topeka	SJ Jct	Herington	105	115	95	105	20	5	65
Toyah	Sweetwater	Sierra Blanca	115	125	100	110	30	15	75
Tracy	Lathrop	Ferry	120	130	105	115	35	20	80
Trenton	Des Moines	Sheffield	100	110	90	100	15	0	60
Tucumcari	Pastura	W Vaughn	105	115	95	105	20	5	65

Subdivision	Station		Rail Laying Temp. Deg. (F)	Rail Temperature for Speed Restriction behind Track Work Deg. (F)	Blanket Heat Speed Restriction (Level 1) Deg. (F)	Blanket Heat Speed Restriction (Level 2) Deg. (F)	First Event Cold Weather Inspection Temp. Deg. (F)	Cold Weather Inspection Temp. Deg. (F)	Rapid Temperature Drop of 40 F or More Below Temp. Deg. (F)
Tucumcari	Dalhart	Pastura	110	120	100	110	25	10	70
Valentine	Alpine	El Paso	115	125	100	110	30	15	75
Valley	Dunsmuir	Lakehead	110	120	95	105	25	10	70
Valley	Lakehead	Roseville	120	130	105	115	35	20	80
Van Buren	Van Buren	N Little Rock	110	120	95	105	25	10	70
Villa Grove	81st Street	Villa Grove	100	110	90	100	15	0	60
Waco	Waco Jct	Smithville	115	125	100	110	30	15	75
Wagoner	Coffeyville	Van Buren	110	120	95	105	25	10	70
White Bluff	LR Jct	S Pine Bluffs	110	120	100	110	25	10	70
Winnemucca	Herlong	Portola	100	110	90	100	15	0	60
Winnemucca	Winnemucca	Herlong	105	115	95	105	20	5	65
Worthington	St James	Sioux City	95	105	85	95	10	-5	55
Wynne	Jonesboro Jct	N Wynne	110	120	100	110	25	10	70
Yoder	Horse Creek	Egbert	100	110	90	100	15	0	60
Yuma	Fingal	W Colton	120	130	105	115	35	20	80
Yuma	East Yard	Fingal	125	135	110	120	40	25	85

Table 7-J

8.0 TRACK INSPECTION REQUIREMENTS

8.1 Scope 8-3

8.2 Standards and Compliance 8-3

8.3 FRA Qualified Personnel 8-3
- 8.3.1 FRA 213.7 Qualification (Class of Track 1-5) 8-3
- 8.3.2 FRA 213.305(a) Qualification (Class of Track 6) 8-4
- 8.3.3 FRA 213.305(b) Qualification (Class of Track 6) 8-4
- 8.3.4 FRA 213.305-Additional Qualification Requirements 8-4

8.4 Track Inspection Responsibilities 8-4
- 8.4.1 Chief Engineer 8-4
- 8.4.2 Director Track Maintenance 8-4
- 8.4.3 Director Track Maintenance Inspection Guidelines 8-5
- 8.4.4 Managers Track Maintenance 8-5
- 8.4.5 Manager Track Maintenance Inspection Guidelines 8-5
- 8.4.6 Inspector Evaluations 8-5

8.5 Track Inspector Responsibilities 8-6
- 8.5.1 Track Inspection Frequencies 8-6
- 8.5.2 Other Inspection Requirements 8-7
- 8.5.3 Track Inspector Documents 8-7
- 8.5.4 Track Inspection Vehicles 8-7
- 8.5.5 Track Inspector Tools 8-8
- 8.5.6 Track Inspection Playbooks 8-8
- 8.5.7 Track Inspection Reporting 8-8
- 8.5.8 Relief Track Inspections 8-8
- 8.5.9 Track Inspection FRA Defect Reporting 8-8
- 8.5.10 Track Inspection Reporting - TMP 8-9
- 8.5.11 Remedial Action Definitions 8-9
- 8.5.12 Excepted Track 8-9
- 8.5.13 Track Inspection Defect Management 8-10

8.6 Track Inspection Guidelines 8-10
- 8.6.1 Ballast 8-10
- 8.6.2 Drainage 8-10
- 8.6.3 Vegetation 8-10
- 8.6.4 Gage 8-10
- 8.6.5 Geometry 8-11
- 8.6.6 Crossties 8-11
- 8.6.7 Rail Defects 8-11
- 8.6.8 Rail End Mismatch 8-11
- 8.6.9 Rail Joints 8-11
- 8.6.10 Joint Bar & Insulated Joint (IJ) Inspection Frequency 8-11
- 8.6.11 CWR Joint Bar Inventory 8-12
- 8.6.12 FRA Joint Bar Fracture Reporting in CWR 8-12
- 8.6.13 CWR Joint Bar Conditions 8-13
- 8.6.14 CWR Joint Inspections at Turnout Locations 8-13
- 8.6.15 Insulated Joint Bar Inspections 8-14
- 8.6.16 Compromise Rail Joint Inspections 8-14
- 8.6.17 Torch Cut Rail 8-14
- 8.6.18 Tie Plates 8-14
- 8.6.19 Rail Fastenings 8-14
- 8.6.20 Road Crossings 8-14
- 8.6.21 Bridges 8-15
- 8.6.22 Main Line Curves 8-15
- 8.6.23 Critical Lead Inspection and Maintenance Criteria 8-15

8.7 Turnout Inspection Guidelines 8-16
- 8.7.1 Switch Stand 8-16
- 8.7.2 Connecting Rod 8-16
- 8.7.3 Switch Points 8-16
- 8.7.4 Switch Point Throw 8-16
- 8.7.5 Switch Point Fit 8-17
- 8.7.6 Switch Point Wear 8-17
- 8.7.7 Switch Point Guards 8-17
- 8.7.8 Stock Rails 8-17
- 8.7.9 Switch Rods 8-17

8.7.10 Switch Plates 8-17
8.7.11 Heel Blocks 8-17
8.7.12 Frogs 8-18
8.7.13 Spring Frogs 8-18
8.7.14 Self-Guarded Frog 8-18
8.7.15 Guard Rails 8-18
8.7.16 Gage 8-18
8.7.17 Cross Level 8-18
8.7.18 Surface 8-18
8.7.19 Alignment 8-19
8.7.20 Inspect Switch Ties 8-19
8.7.21 Rails 8-19
8.7.22 Rail Anchors 8-19
8.7.23 Ballast 8-19

8.8 Annual Switch Inspections 8-19
8.8.1 Switch Health Rating 8-19
8.8.2 Annual Switch Inspection Responsibilities 8-19
8.8.3 Switch Inspection Guidelines 8-19

8.9 Special Inspections 8-20
8.9.1 Special Inspector Qualifications 8-20
8.9.2 Training 8-20
8.9.3 Identification of Structures 8-20
8.9.4 Notification Procedures 8-20
8.9.5 Initial Notification 8-20
8.9.6 Notifying Train Crews 8-20
8.9.7 Notifying Maintenance-of-Way Employees 8-21
8.9.8 Special Inspections—General Requirements 8-21
8.9.9 Performing Special Inspections 8-21
8.9.10 Special Inspections-Storms, Floods, Washouts, Mud/Rock Slides 8-21
8.9.11 Special Inspections—Right-of-Way Fires 8-22
8.9.12 Special Inspections—Earthquakes 8-22
8.9.13 Special Inspections - Hot Weather Inspections 8-23
8.9.14 Special Inspections - Cold Weather Inspections 8-23

8.10 FRA Inspection Guidelines 8-23
8.10.1 Identifying Exceptions - Defects 8-23
8.10.2 Identifying Exceptions - Violations 8-23
8.10.3 Violation Penalties 8-23
8.10.4 FRA Reports 8-24
8.10.5 FRA Report- Railroad Follow-Up Instructions 8-24
8.10.6 FRA Report - Violations 8-24
8.10.7 FRA Violation Investigation Procedures 8-24
8.10.8 FRA Requests for Information 8-25
8.10.9 FRA Electronic Inspection Record Review Guidelines 8-25
8.10.10 Signal Inspection Intervals and Record Keeping 8-25

8.11 Required Field Documentation – FRA Compliance 8-25

8.12 Derailment Investigation 8-25

8.13 Track Maintenance Planner – Engineering Defect Management Guidlines 8-25

8.0 TRACK INSPECTION REQUIREMENTS

These are the minimum track inspection requirements necessary for inspecting Union Pacific owned track, roadbed and other facilities. Compliance with FRA and Union Pacific policies and procedures is vital to the safety of all employees and the general public.

8.1 Scope

This requirement applies to all Union Pacific owned main tracks and sidings, yard tracks, and industry trackage. Unless a prior agreement concerning the maintenance and inspection is in place, privately owned industry tracks and leased trackage do not fall under Union Pacific inspection responsibility. Private tracks should be identified and inspections must be made up to the clearance point, property line, or gate leading into that industry.

8.2 Standards and Compliance

Compliance with UPRR and FRA standards regarding track safety is mandatory. All Engineering employees must comply with the following standards:

- Union Pacific Engineering Standards (PB-22003).
- Union Pacific Engineering Track Maintenance Field Handbook (PB-22000H).
- FRA Track Safety Standards Subpart A to F, Class of Track 1-5 (PB-22009).
- FRA Track Safety Standards Subpart G, Class of Track 6 (PB-24123).

These requirements include standards, practices and procedures, which MUST be followed to ensure safety and/or to comply with regulations. Track conditions must meet, at a minimum the FRA Track Safety Standards for the associated class of track.

Where track conditions do not comply with these requirements, action must be taken to:

1. Repair - Perform minor repairs or arrange for repairs to bring the track into compliance;
2. Restrict - Slow order the track to the class of track, for which it does comply; or
3. Remove -Take the track out of service until repairs can be made.

In addition, inspection frequencies and traversal of all tracks and switches must be performed at a minimum, to meet all FRA requirements.

8.3 FRA Qualified Personnel

8.3.1 FRA 213.7 Qualification (Class of Track 1-5)

Each employee responsible for the inspection of (213.7 b) and/or repair of track (213.7 a) and/or installation/inspection/repair of CWR (213.7 c) owned and maintained by UPRR must be trained and designated as qualified per FRA 213.7. The basis for the qualifications consists of one year's supervisory experience or a combination of work experience and track inspection training. More importantly, managers must ensure that employees know and understand the regulations, are able to identify defects, and can prescribe the appropriate remedial actions before 213.7 designations are made. Employees must demonstrate the ability to make accurate track geometry measurements using the proper measuring devices and determine remedial actions using the FRA Track Safety Standards. All employees responsible for the inspection, installation, adjustment or maintenance of CWR track must complete training on CWR procedures every calendar year. In addition, they shall be provided a copy of these procedures and accompanying documents. Engineering **Directors and Managers** will maintain lists of those employees qualified to supervise restorations and inspect track in CWR territory. The qualified employee lists will be made available to the FRA upon request. Training programs will address the following:

- CWR installation procedures.
- Rail anchoring requirements when installing CWR.
- Preventive maintenance on existing CWR track.
- Monitoring curve movement following track surfacing and lining.
- Placing temporary speed restrictions account track work.
- Rail joint inspections.
- Insufficient ballast.
- Extreme weather inspections.
- Recordkeeping.

Signal and Track employees designated as 213.7(d) are required to receive broken rail pull-apart training every 2 years. Completing this training will serve as the qualification for this requirement provided the employee has at least one year of M/W or signal experience.

Engineering Directors and Managers will maintain lists of those employees designated as qualified per 213.7 (a) (b) (c) and (d). The list is maintained in the Track Maintenance Planner (TMP) under the Track Inspect tab (Application for FRA 213.7 Qualified persons). The qualified employee lists will be made available to the FRA upon request.

Newly promoted Track Inspectors must be scheduled to attend UPRR's Track Inspection training within 30 days of being awarded the position.

Any person who has been designated as a 213.7 (a) (b) or (c) qualified employee is required to receive track inspection refresher training every 3 years.

8.3.2 FRA 213.305(a) Qualification (Class of Track 6)

Employees may be qualified to perform restorations and renewals, 213.305(a), in one of three ways:

1. The employee may combine five or more years of responsible supervisory experience in track maintenance for Class 4 track or higher and the successful completion of a training course specifically developed for high speed track supplemented by special on-the-job training emphasizing the techniques to be used in the supervision, restoration, and renewal of high speed track.
2. The employee may be qualified by a combination of at least one year of responsible supervisory experience in track maintenance of Class 4 track or higher and 80 hours of specialized training or in a college level program supplemented by special on-the-job training with emphasis on the maintenance of high speed track.
3. As a third option, an employee with at least two years of experience in track maintenance in Class 4 track or higher can achieve qualification status by completing 120 hours of specialized training in the maintenance of high speed track provided by the employer or by a college level engineering program, supplemented by special on-the-job training with emphasis on the maintenance of high speed track. All or part of the experience required may be non-supervisory.

Employees must pass a recorded examination on high speed track maintenance and inspection procedures as part of the qualification process.

8.3.3 FRA 213.305(b) Qualification (Class of Track 6)

Employees may be qualified to perform track inspections, 213.305(b), in one of three ways:

1. The employee may combine five or more years of responsible experience inspecting track for Class 4 track or higher and the successful completion of a training course specifically developed for high speed track supplemented by special on-the-job training emphasizing the techniques to be used in the inspection of high speed track.
2. The employee may be qualified by a combination of at least one year of responsible experience in track inspection of Class 4 track or higher and 80 hours of specialized training supplemented by special on-the-job training with emphasis on the inspection of high speed track.
3. As a third option, an employee with at least two years of experience in track maintenance in Class 4 track or higher can achieve qualification status by completing 120 hours of specialized training in the inspection of high speed track supplemented by special on-the-job training with emphasis on the inspection of high speed track.

Employees must pass a recorded examination on high speed track maintenance and inspection procedures as part of the qualification process.

8.3.4 FRA 213.305-Additional Qualification Requirements

Managers must ensure that employees know and understand the regulations, are able to identify defects, and can prescribe the appropriate remedial actions before 213.305 designations are made. Employees must demonstrate the ability to make accurate track geometry measurements using the proper measuring devices and determine remedial actions using the FRA Track Safety Standards (TSS).

All employees responsible for the inspection, installation, adjustment or maintenance of CWR track must complete training on CWR procedures every calendar year**.** In addition, they shall be provided a copy of these procedures and accompanying documents**.** Engineering **Directors and Managers** will maintain lists of those employees qualified to supervise restorations and inspect track in CWR territory. The qualified employee lists will be made available to the FRA upon request.

Signal and Track employees designated as 213.305(d) are required to receive broken rail pull-apart training every 2 years. Completing this training will serve as the qualification for this requirement provided the employee has at least one year of M/W or signal experience.

8.4 Track Inspection Responsibilities

8.4.1 Chief Engineer

The Chief Engineer is responsible for monitoring inspection compliance.

8.4.2 Director Track Maintenance

The Director Track Maintenance (DTM) is responsible for the quality of all inspections on his territory. Those responsibilities include:

1. Coaching and mentoring Manager Track Maintenance (MTM) to ensure that quality maintenance practices, repairs and track inspections are performed.
2. Monitor inspection activities to ensure compliance.
3. Periodic inspections of jointly operated track on which Union Pacific operates but another railroad owns or maintains. This inspection must ensure that proper maintenance procedures are being followed.

8.4.3 Director Track Maintenance Inspection Guidelines

1. Spend at least 5 days per month conducting hy-rail and walking inspections of main tracks, sidings, industry leads, and yard tracks.
2. Once every 4 months inspect all FRA Class 3 through 6 main tracks.
3. Once every 6 months, ride passenger trains, freight trains or geometry car over all main tracks.
4. Once each year, inspect all Class 1 and 2 main tracks, industrial leads and critical switching leads.

See Table 8-A for schedule of DTM inspections:

FRA Class Main Track		6/5	4	3	2/1
Director Track Maintenance	Passenger Train, Geometry Car or Freight Train	6 Mo	6 Mo	6 Mo	6 Mo
	Hy-rail/Walk	4 Mo	4 Mo	4 Mo	1 Yr
	*Switches	*Exception based inspection process			

Table 8-A

8.4.4 Managers Track Maintenance

The Manager Track Maintenance is responsible for the quality of all inspections on his territory. Those responsibilities include:

1. Ensuring that existing track conditions that do not comply with FRA regulations are properly protected.
2. Coaching and mentoring Track Inspectors and maintenance personnel to ensure the quality maintenance practices, repairs and track inspections are performed.
3. Manage situations that would prevent a Track Inspector from meeting inspection frequencies, writing defects, or initiating remedial actions.
4. Understanding the UPRR electronic track inspection process.
5. Manage territory/playbook by assigning tracks to inspectors in the TMP. See Section 8.5.6 Track Inspection Playbooks.

Do not assign other duties that would prevent Track Inspectors from conducting their required inspections to meet frequency compliance without the prior approval of the Director Track Maintenance.

8.4.5 Manager Track Maintenance Inspection Guidelines

1. Spend at least 10 days each month inspecting (by hy-rail or walking) main tracks, sidings, industry leads, and yard tracks.
2. Once every 2 weeks, conduct hy-rail inspections of all FRA Class 3-6 main tracks.
3. Once each month, conduct hy-rail inspections of other main and industry leads.
4. Once every month, ride passenger trains, freight trains or geometry car over territory.
5. Once every 90 days, accompany Track Inspectors on their entire main and industrial leads track inspections.
6. Once each year, conduct hy-rail or walking inspections of all yard and industry tracks.
7. Once every 2 weeks conduct walking inspection on critical switching leads.

A monthly Track Inspector evaluation can be conducted during any of the aforementioned inspections, if performed with the Track Inspector.

See Table 8-B for schedule of MTM inspections.

FRA Class Main Track		6/5	4	3	2/1
Manager Track Maintenance	Passenger train, Geometry Car or Freight Train	1 Mo	1 Mo	3 Mo	3 Mo
	Hy-rail/Walk	2 Wk	2 Wk	2 Wk	1 Mo
	Switches	1 Yr			

Table 8-B

8.4.6 Inspector Evaluations

Track Managers must ensure the overall quality of track inspections by performing a monthly Track Inspector evaluation during a hy-rail or walking inspection with each assigned inspector. Inspectors are to be evaluated as Satisfactory or Needs Coaching. Track Inspector Evaluation Form is found by: MyUP > Track Maintenance > Track Maintenance Planner > TRK INSP tab > Track Inspector Evaluation.

Items to be evaluated include:

- Overdue reports to ensure proper inspection frequencies.
- Inspection schedules/playbooks.
- Reports reflecting actual track conditions.
- Remedial actions taken to protect defects.
- Track Maintenance Planner (TMP) maintenance items.
- Vehicle and inspection tool audits.

Substandard inspections, remedial actions or failures to comply with the items shown on the evaluation form need to be documented and rated. Managers should include feedback in the form of comments to reinforce expectations and to improve the Track Inspector's performance. Track Inspector evaluations will be submitted electronically using the Track Maintenance Planner/ Manage Tab/ Inspector Evaluations.

8.5 Track Inspector Responsibilities

The Track Inspector's primary responsibility and duty is to inspect track for defects and protect all defects found according to UPRR and FRA Track Safety Standards.

1. Track Inspectors will perform inspections on foot or by riding in a vehicle that allows visual inspection of the track. Track Inspectors must be allowed to complete inspections of all assigned track and switches to at least meet FRA minimum frequency for each calendar month.
2. The Track Inspector has both the authority and responsibility to slow order the track or remove tracks from service as conditions warrant.
3. Track Inspectors are also expected to perform minor repairs, but at no time will the scope of running repairs prevent the inspector from completing scheduled inspections.
4. Track Inspectors will complete required reports.

8.5.1 Track Inspection Frequencies

All tracks and switches must be inspected to meet minimum FRA frequencies. If a Track Inspector is not afforded the opportunity or time to inspect the tracks at the required frequency, the Track Inspector is to advise that the track will be removed from service until inspection can be made. If more inspection days are needed to achieve compliance, conduct inspections on rest days.

1. Track Inspectors will, at a minimum, inspect using Table 8-C-1.
2. Track Inspectors responsible for the inspection of concrete tie track with more than 40 MGT annually are required to traverse the track every month by passenger trains, freight trains or geometry car.

Track Type	Class of Track	Frequency of Inspection
Main Track and Sidings	1, 2, 3	1) Inspect weekly with at least 3 calendar days between inspections. Exceptions: If the track is used less than once per week, inspect before use. **or** 2) Inspect twice weekly with at least 1 calendar day between inspections, if passenger trains operate or more than 10 MGT of traffic during the previous year.
	4, 5	Inspect twice weekly with at least 1 calendar day between inspections.
	6	Inspect twice weekly with at least 2 calendar day between inspections.
Industry leads Industry tracks Yard tracks	1-3, Excepted	Inspect monthly with at least 20 calendar days between inspections. Exceptions: If the track is used less than once per month, inspect before use.
Connecting tracks		Inspect weekly with at least 3 calendar days between inspections.
Turnouts and crossover tracks	1-5	Inspect monthly on-foot
	6	Inspect weekly on-foot
Traverse Mains		Once every 2 weeks
Traverse Sidings		Monthly
Test Spring Frogs	2 - 6	Every 90 days with 60 days between inspections

Table 8-C-1

These are minimum inspection requirements. Perform additional inspections when directed by the MTM or whenever the safety of train operations is in question.

Automated cant inspections (Geometry Car Cant Inspection System) of track constructed with concrete ties must be inspected at the frequencies in the following chart.

Class of Track and Service	Frequency of Inspection	Type of Inspection
4, 5 or (3 with Regularly Scheduled Passenger Service) and > 40 MGT	2 times each calendar year with no less than 160 days in between inspections	Automated Inspection
4, 5 or (3 with Regularly Scheduled Passenger Service) and <= 40 MGT	1 time each calendar year	Automated Inspection
3, 4, 5 Main Line that is Exclusively Passenger Service	1 time each calendar year	Automated Inspection or Walking
4, 5 or (3 with Regularly Scheduled Passenger Service) with train operation interruption	1 time within 45 days after train operation has resumed	Automated Inspection or Walking
Less than 600 feet of tangent track constructed of Concrete Ties in 4, 5 or (3 with Regularly Scheduled Passenger Service)	None	None

Table 8-C-2

Multiple tracks can be inspected by hy-rail using the following methods:

1. One Inspector. Inspect up to two tracks at one time, provided the inspector's visibility remains unobstructed and the adjacent track being inspected is not more than 30 feet from the center of the track on which the inspector is riding.
2. Two Inspectors. Inspect up to four tracks at one time, provided the inspectors' visibility remains unobstructed and the adjacent tracks being inspected are not more than 39 feet from the center of the track on which the inspectors are riding.

8.5.2 Other Inspection Requirements

Follow these other inspection frequency requirements:

1. If an assigned Track Inspector is absent, or if no Track Inspector is assigned, assign the inspection to a FRA-qualified person.
2. In the event a track is used less than once every month, the track may be taken out of service and then inspected on foot before it is returned to service. Inspectors must tag, lock, clamp or spike the switch, and use the Engineering Track Management System (ETMS) to change the status of these tracks to out of service until such time that it is needed.
3. A switch may not be taken out of service if any movement occurs over any part of that switch and will be required to be inspected at normal FRA frequency.
4. Walk tracks, switches and joints whenever possible.

8.5.3 Track Inspector Documents

Track Inspectors must carry the following documents:

- FRA 213.7 qualification card. (24204)
- FRA 213.305 qualification card (24204G) Class 6 track only.
- Engineering Track Maintenance Field Handbook. (PB-22000H)
- Written CWR Procedures (PB-21968)
- FRA Part 213 Subpart A-F Track Safety Standards. (PB-22009)
- FRA Part 213 Subpart G Track Safety Standards. (PB-22095) Class 6 track only.
- OTS/RMM Manuals. (PB-20510)
- Job Briefing book. (24318)
- Lone Worker Job Briefing book. (24327)
- Timetable/General Orders/SSI. (PB-27015)
- GCOR/MW Rule Books. (PB-20396)
- Track Bulletins.
- Condensed Profile and ZTS (TMP).
- Hy-Rail Inspection Log (Form-24126)

This is a minimum requirement for track inspection, local polices may require other documentation.

8.5.4 Track Inspection Vehicles

1. Track Inspectors are responsible for the safe operation and condition of assigned hy-rail inspection vehicles used for track inspection. At a minimum, vehicle must have annual hy-rail inspection and daily inspection log filled out before vehicle is set on the track.
2. Inspectors will operate hy-rails at speeds slow enough to allow a thorough inspection of the entire roadbed and track structure. Vehicles used for track inspection must not exceed 5 MPH when passing over track crossings or turnouts.

8.5.5 Track Inspector Tools

Track Inspectors must have access to the following inspecting tools to perform a proper inspection:

1. Tape Measure
2. Level Board
3. 62 ft. String Line
4. 124 ft. String Line for Class 6 Inspections
5. Taper or Step Gauge
6. 6”, 24” and/or 36” straight edge
7. Highly Visible Ribbon (to mark defects)
8. Rail wear gauge
9. GPS Unit
10. Portable Track Loading Fixture (PTLF)
11. Paint Sticks /soapstone/ lumber crayon

The following is a list of recommended tools to assist Track Inspectors to make quality track inspections:

1. 2 lb. hammer
2. Counters
3. Engine inspection mirror.
4. Track geometry strip charts
5. Spring frog testing devices

Track Inspectors should also carry the proper tools and materials to make minor repairs.

8.5.6 Track Inspection Playbooks

To ensure that FRA inspection frequencies are met, Track Inspectors and managers will designate tracks and switches for each Inspector territory. Once the territory is defined, Track Inspectors will develop a daily inspection plan (setups). On main lines, inspectors must define the territory limits and designate days to inspect specific turnouts within that range. Yard Inspectors may group tracks and switches, as conditions and operating plans change. Managers and Inspectors will monitor the inspection progress against this plan, and adjust accordingly. Managers assign tracks in TMP under Manage or Track Inspect tab (Manage Track Inspector Territories & Playbooks).

Playbook compliance is only achieved when all the inspection requirements for tracks and switches are performed on a monthly basis.

8.5.7 Track Inspection Reporting

Track Inspectors must create an inspection report whenever an inspection is performed. Assigned Track Inspectors will use the electronic track inspection system to report FRA inspections of UPRR owned track.

Track Inspectors will use their USER ID and password as their electronic signature. Track Inspectors must not use USER ID’s to access and report FRA track inspections. See Section 8.10.8 FRA Requests for Information.

Track Inspectors must ensure the accuracy of the following items:

1. A complete list of the tracks and switches inspected.
2. Main and siding track traversals.
3. Defects found with remedial actions listed for each defect.

All track inspection reports must be completed on the day of the inspection using the Engineering Track Management System or temporarily on paper. Electronic Reports must be uploaded within 24 hours of the closing of the report. In the event the inspector is unable to use the electronic system, paper copies may be used. All paper copies must be converted into electronic form as soon as possible. Paper copies that are entered into the electronic system within 72 hours of the day of inspection (with required comments) can be discarded and the electronic copies are considered the copies of record. Any paper copies that are not entered in that time frame will be considered the copy of record and must be kept at the Service Unit headquarters for viewing by the FRA.

8.5.8 Relief Track Inspections

Relief inspectors will use either the Engineering Track Management System, UPRR Web Based FRA Inspection Reporting, or paper copies to document FRA required inspections.

8.5.9 Track Inspection FRA Defect Reporting

All track conditions that do not comply with the FRA 213 Safety standards must be identified and appropriate remedial action taken. Track Inspectors will record defects and the appropriate remedial action for every non-compliant FRA condition, even if it was **repaired immediately.**

8.5.10 Track Inspection Reporting - TMP

Various track conditions can be documented using the Electronic Track Inspection System.

Track conditions that require TMP documentation include:

1. Conditions at joint locations in CWR territory.
2. Insulated Joints.
3. Road Crossing Conditions.
4. Any conditions that are approaching FRA thresholds.

8.5.11 Remedial Action Definitions

Repaired Before Traffic - Inspectors will use the remedial action of "Repaired before Traffic" when a defect is corrected before the passing of a train. Complete the date and type of corrective action to close the defect. Do not assign gangs to defects that are or will be corrected the same day of the inspection.

Slow Orders - Inspectors will use slow orders to protect locations that do not meet the Class of track standards set forth in 213 Track Safety Standards (TSS). Whenever a slow order is placed, inspectors will arrange to place yellow boards in advance of the restriction, unless the inspector knows that the defect will be repaired before the end of that working day.

Schedule for Repair - This remedial action can only be used for non-class specific defects. Once "Schedule for Repair" is used, defects must be repaired as soon as possible, with the understanding that all defects will be repaired within 30 days. All "Schedule for Repair" defects that exceed 30 days are in violation of FRA regulations.

213.9(b) - When a defective condition exists that does not meet the FRA requirements for Class 1 track, inspectors may still allow operation at Class 1 speeds over that defect for a period of not more than 30 days if the inspector determines that operations may safely continue. If the track has not been repaired before the 30 day period has expired the track will be taken out of service.

Out of Service - When Track Inspectors take tracks out of service, no operation is to take place over that track until repairs have been made and the track is restored to service.

Exception: **Out of Service Tracks can be operated over only in cases of emergency and only if a qualified person visually supervises each move.**

8.5.12 Excepted Track

Follow these requirements for designating a track as excepted status:

1. The designated track must be identified as a yard track, industry track or industrial lead.
2. The track must be identified as "Excepted Track" in the timetable, special instructions or general order.
3. The identified segment of track must not be located within 30 feet of an adjacent track which can be subjected to simultaneous use at speeds in excess of 10 mph.
4. The identified segment of track must not be located on a bridge including the track approaching the bridge for 100 feet on either side, or located on a public street or highway, if railroad cars containing commodities required to be placarded as hazardous material are to be operated on the track.

Train operations on a track designated as excepted are limited by the following requirements:

1. No train shall be operated at speeds in excess of 10 mph.
2. No occupied passenger train shall be operated on the track.
3. No freight train shall be operated on the track if it contains more than five cars required to be placarded as hazardous material.

Follow these requirements for inspection of excepted track:

1. Gage exceeding 57 ¾ inch requires remedial action or removed from service.
2. Excluding gage defects, all other defects will be reported using the remedial action "Excepted Track."
3. Excepted track is to be inspected monthly with at least twenty (20) days between inspections. If a track is used less than once per month the track need only be inspected prior to use.
4. Unsafe track conditions require the track to be removed from service immediately.

Follow these requirements prior to removal of a track from excepted status:

1. The Manager Track Maintenance must inspect the track to ensure the condition of the track meets the requirements for the desired class of track.
2. The Manager Track Maintenance shall advise the Director Track Maintenance prior to the removal of a segment of track from excepted status.
3. The Manager Track Maintenance shall advise the appropriate FRA Regional Office at least ten (10) days prior to removal of a track from excepted status.

8.5.13 Track Inspection Defect Management

Managers Track Maintenance are responsible for the overall monitoring of track defects reported by Track Inspectors and other automated detection systems. Defects must be corrected in a timely manner consistent with FRA and UPRR requirements. These defects include those found by:

- Track Inspectors
- FRA Inspectors
- Detector Cars
- Geometry Cars
- Vehicle Track Interaction (VTI) Equipped Vehicles
- Gage Restraint Measuring System Vehicles

Defects can be closed in the following manner:

- Production Reporting by the gang making repairs.
- Track Inspectors using the Engineering Track Management System.
- Track Maintenance Planner (which includes MTM's).
- System Gang work through the Track Maintenance Planner.

8.6 Track Inspection Guidelines

These are basic guidelines, when making inspections, and initiating remedial actions, refer to the Engineering Track Maintenance Field Handbook and the FRA 213 Track Safety Standards.

8.6.1 Ballast

Good ballast and proper drainage are necessary to maintain good surface and line throughout the track structure. Ensure that muddy conditions and standing water in the track structure are reported. Monitor the amount of ballast present off the shoulders and in the cribs, especially when there is potential for tight rail conditions. Ballast defects (insufficient and fouled) are non-class specific.

8.6.2 Drainage

Drainage is a sometimes neglected yet important aspect of track inspections. Check for any condition that prevents water from flowing freely away from the track. Culverts, bridges and ditches need to be inspected once every three years and defects reported where problems exist. Note any standing water along the tracks because it may indicate a blocked culvert. Drainage defects are non-class specific.

8.6.3 Vegetation

Vegetation defects occur over time and need to be remedied before they become a safety hazard to employees and trains. A "Form C" stumbling hazard can be issued whenever "schedule for repair" is used as a remedial action, if the vegetation condition is in walkways. Repairs must be made as soon as possible within a 30 day time period. Refer to Section 8.6.20 Road Crossings for road crossing vegetation remedial actions. Refer to section 6.2 and Standard Drawing No. 0025 Rail Markings for Engines, Cars and Equipment Clear of Road Grade Crossings.

8.6.4 Gage

Wide gage is responsible for more track caused derailments than any other defect. Inspectors must regularly monitor gage conditions in curves and turnouts and at joint locations. Add lateral under load movements to existing measurements to determine remedial actions. When inspecting yard tracks, industry leads and industry tracks, once gage measurements reach 57 ¾", the track must be taken out of service.

The Portable Track Loading Fixture (PTLF) is a tool that is designed to test track gage, lateral strength of railroad crossties and fastening systems. The PTLF applies 4,000 pounds of lateral force providing the ability to simulate a lateral load on the track to get the full track movement. The PTLF provides the ability and flexibility to find potential gage locations that would not normally be measured with just a track gage. The PTLF is best used in locations where:

- Track movement is indicated on the fastenings and/or ties, and the need develops to measure the full movement.
- Static track gage measurements exceed 57-1/4".
- PTLF and light gage trucks find .75" movement.
- Wide gage has been found behind the evaluation cars.
- Wide gage has been found behind the Gage Restraint Measurement System (GRMS) vehicle.
- Ahead of yard & industry switch points checking for any gap that may occur under load.

8.6.5 Geometry

Geometry defects include alignment and surface defects such as runoff, profile, cross level, and warp. Geometry defects are class specific. Accurate measurements must be taken and entered into the report. All measurements must include movement under loaded conditions.

8.6.6 Crossties

1. Minimum non-defective ties over any 39 foot section (0109B4 – FRA TSS Defect Code) have remedial actions based on the number of non-defective ties. Include the number of non-defective ties when reporting the minimum number of ties per 39 feet.
2. Joint Tie Defects (0109B3) also have remedial actions based on distance measured to the first non-defective tie. If a joint tie defect exists where the distance from the centerline of a joint measures over 24 inches to the first non-defective tie in both directions, then the only remedial action is 10 mph per 213.9(b) if the defect is not repaired. Include the distance to the first non-defective tie when writing a joint tie defect.
3. Tie Cluster Defects 0109B1 and 0109B2 do not have specific remedial actions, therefore, crosstie clusters may be written as non-class specific defects. The following criteria for tie clusters may be written as a TMP item, or as an FRA defect; however, consider geometry when determining any remedial action concerning tie clusters. Inspectors must use good judgment when writing tie cluster defects.
   - When FRA geometry deviations exist at tie cluster locations, be governed by the remedial action table shown in TSS 213.63.
   - Use more restrictive actions for turnouts and curves.

8.6.7 Rail Defects

There are 2 main categories of rail defects; Transverse (percent of railhead) and Longitudinal (length of defect). Transverse defects are usually found by detector cars. Track Inspectors need to always be on the lookout for:

1. Unusual appearances on the rail running surface.
2. Bleeding and discoloration below the rail head.

Joint locations are prone to various rail defects. (Bolt Hole Breaks, Head Web separations, and Horizontal Split Heads).

A crack across the running surface requires the remedial action for “breakout”. Those rails must be either replaced, removed from service or movements across visually supervised.

The remedial action of 213.9(b) cannot be used for rail defects.

8.6.8 Rail End Mismatch

Mismatch is found where new rail has been installed against old. Mismatch also is found at loose joints or improperly installed compromise joints. There are two types of mismatch, Tread (top) and Gage (side). Gage mismatch is a serious condition which can lead to a derailment.

8.6.9 Rail Joints

Joint bar requirements are class specific in that certain requirements must be met to operate at certain speeds. Because of the wide range of defects, care must be used in determining the remedial action shown.

Remedial action for TSS 213.121(e) – Less than two bolts in a rail end in CWR territory if not repaired – 10 mph per 213.9(b) or out of service.

8.6.10 Joint Bar & Insulated Joint (IJ) Inspection Frequency

Table 8-D1 shows the required inspection frequency.

Territory	Track Class	Track Type	Frequency
CWR	Class 6	All tracks	Every 30 days
CWR	Class 3-5	Main tracks	Every 30 days
CWR	Class 2	Main tracks	Every 90 days
CWR	Class 2-5	Sidings, industrial leads, and connecting tracks	Every 90 days
CWR	Class 1	All tracks	Yearly
Jointed Rail	Class 2-5	Main tracks, sidings, industrial leads and connecting tracks with annual tonnage exceeding 10 MGT	Every 90 days
Jointed Rail	Class 2-5	Main tracks, sidings, industrial leads and connecting tracks with annual tonnage greater than 5 MGT and less than 10 MGT	Every 6 months
Jointed Rail		All other tracks	Yearly

Table 8-D-1

For all Class 6 tracks, rail joint bars and insulated joints must be inspected on foot and inventoried every 30 days and documented in the Track Inspection System.

For CWR main Class 3-5 tracks, rail joint bars and insulated joints must be inspected on foot and inventoried every 30 days and documented in the Track Inspection System.

For CWR main Class 2 tracks, rail joint bars and insulated joints must be inspected on foot and inventoried every 90 days and documented in the Track Inspection System. The Director Track Maintenance is responsible for arranging more frequent inspections if conditions warrant.

For Sidings, industrial leads and connecting Class 2-5 tracks, rail joint bars and insulated joints must be inspected on foot and inventoried every 90 days and documented in the Track Inspection System.

When snow prevents the inspection of joint bars and insulated joints for a particular territory within the required frequency, the inspection interval may be extended by up to 30 calendar days from the last day that the extreme weather condition prevented the required inspection.

Track inspectors or assigned employees conducting inspections and inventory of joints bars and insulated joints must mark the field side joint bar. Mark TOP of joint bar per Figure 8-A with a single line at the lower mile post end in sequential order per the schedule in Table 8-D-2. Lumber crayons item numbers for e-procurement are in Table 8-D-2.

The automated joint inspection car traversing the track is considered an inspection.

NOTE: Do not use paint sticks, spray paint, etc. that will result in permanent marks left on joint bars.

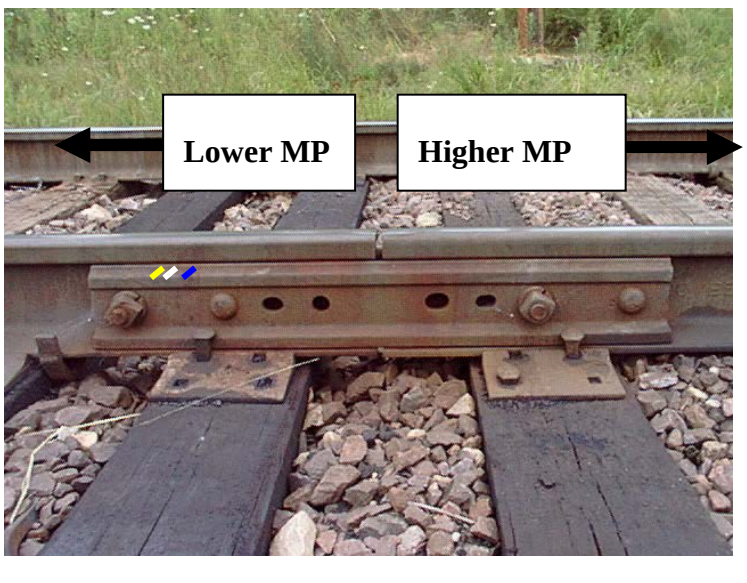

Figure 8-A

Table 8-D2 shows the required marking schedule.

Track Type	Month	Chalk Color	Lumber Crayon Item Number
Main	**January, April, July, October**	Yellow	410-1448
	February, May, August November	White	410-4025
	March, June, September, December	Blue	410-4020
Siding	**March, June, September, December**	Blue	410-4020

Table 8-D-2

8.6.11 CWR Joint Bar Inventory

Refer to ETMFH Chapter 4, Section 4.10.4.

8.6.12 Joint Bar Fracture Reporting in CWR

Whenever a broken or cracked joint bar is found on main tracks and sidings in CWR territory during designated inspections, a fracture report must be completed electronically. The Fracture Report shall be prepared on the date the cracked or broken joint bar is discovered.

When reporting joint bar fractures, look for the following conditions that require repair:

- Cracked or broken joint bars.
- Battered, mismatched or broken rail ends.
- Cross-level deviations.
- Lack of support to the joint due to defective ties.
- Broken or missing tie plates.
- Broken, bent, loose or missing bolts.
- Lateral movement on curved track.

Joint bars that are cracked or broken between the middle two bolt holes must be replaced. On the occasion that the bars cannot be immediately corrected, and if safe to do so, a remedial action of 10 mph per 213.9b can be used to protect the location.

8.6.13 CWR Joint Bar Conditions

Locations in CWR territory where conditions exist that could contribute to broken joint bars must also be recorded. If any of the joint bar conditions are not corrected, the inspection frequency increases to once every two weeks until repairs are made. Since these conditions are non-FRA defects, they will be written as a TMP CWR joint condition. Each CWR joint bar watch location shall be identified with a highly visible marking, such as a ribbon. Do not use paint or paint sticks.

These include:

- Loose, missing or bent bolts - A minimum of 2 bolts per rail must be in place at each joint.
- Rail end batter (More than 3/8" in depth and more than 6" in length measured with a 24-inch straight-edge).
- Joint vertical movement that exceeds 75 percent of the allowable threshold for the designated class of track. Joint lateral and vertical movement is the apparent visible movement measured at the joint.

Use Table 8-E to determine if action is needed:

Visible Vertical Movement Table	
Class of Track	**Measurement**
2	2”
3	1 ¾”
4	1 ½”
5	1”
6	¾”

Table 8-E

- Gap between rail ends greater than 1.5 inches.
- Longitudinal rail movement greater than 2 inches.
- Tie(s) not effectively supporting joint.
- Broken or missing tie plate(s).
- Joint lateral movement (in a curve or spiral) that reaches ¾ inch.
- Fouled ballast present in conjunction with joint vertical movement (profile) that exceeds 75% of the allowable threshold for the designated class of track.

Using FRA defects codes and remedial actions removes the re-inspection requirement.

8.6.14 CWR Joint Inspections at Turnout Locations

Joint bars will be inspected at turnout locations during the monthly switch inspection. Turnout locations are defined as:

- At Control Points and signalized switches – All joints up to and including the insulated joint for the signal governing movement over the switch. In the event the insulated joint plug is not welded in track, include both joints on each end of the plug.
- Other turnouts in CWR territory – include all joints 50 feet in front of the switch points and 50 feet behind the heel of frog.
- At cross-overs all joints in track between switches.

At track crossings

- All joints from the crossing up to and including the insulated joints at the signals governing movement entering and leaving the control point or interlocking.
- If there are no signals at the track crossings, include as a minimum all joints that are between or connected to the crossing frogs.

At lift rail assembles or other transition devices on movable bridges.

- All joints immediately attached to the rail assembly or transition device.

If a cracked or broken joint bar is discovered during the monthly inspection of any of the above locations, the required reports must be completed.

Embedded Joints

Permanently Embedded Locations:

- Where such locations exist, it is not necessary to disassemble or remove the track structure (e.g., remove pavement or crossing pads) to conduct an inspection of CWR joints. Make every effort, to the extent practicable, to inspect the visible portion of joints in these structures.

Temporarily Buried Locations:

- Joints may sometimes be temporarily buried (e.g., where ballast or similar material is in the middle of the track and along the track) and therefore unavailable for inspection. Where CWR joints are buried (e.g., by ballast), wait for the completion of the track work before conducting joint bar inspections.

It is not necessary to record joint bar conditions shown in Section 8.6.13 CWR Joint Bar Conditions at turnout locations.

8.6.15 Insulated Joint Bar Inspections

Insulated joint bar inspections are to be included as part of the FRA joint bar inspections. When an insulated joint is found to be defective as described in Table 8-F, take the following actions to protect the safety of train operations:

Level	Defective Conditions	Action
3	Insulation/glue stripped out from center of joint past the 2nd bolt hole on the top of the joint bars, evidence of joint slippage at the end of the joint bars or rail ends touching.	Schedule for repair (replacement) within 30 days. If only defect is rail ends touching, remedial action is slotting.
2	Any of the conditions described in level 3 plus any broken bolts.	30 MPH until replaced
1	Insulation/glue stripped out on both top and bottom of bars. The bars will not fit tight and will allow rail movement and bolts to break.	10 MPH until replaced

Table 8-F

Insulated joints must be kept tamped up with good tie support to avoid the conditions described above. Signal maintainer must be immediately notified of any of the conditions noted above so that the Insulated Joint can be tested for compliance with signal standards.

Actions required for Defective Insulated Joints

When necessary to test one IJ, both insulated joints in the pair must be tested. If an insulated joint fails electrically, the Signal Maintainer must take the following actions to protect the safety of train operations.

1. If only one IJ fails electrically, work with track maintenance personnel to replace the IJ within 30 days. If the joint fails electrically because the rail ends are touching, the action is grinding or slotting the joint.
2. If both joints fail electrically, the following actions must be taken - based on the type of relay or devices in use:
   - BIASED relays or devices (on both sides of the IJ) - work with track maintenance personnel to replace at least one IJ within 24 hours unless slotting the rail ends will fix the problem.
   - NEUTRAL relays (on one or both sides of the IJ) - place track shunt to disable signal system until at least one IJ is replaced unless slotting the rail ends will fix the problem.
3. If a switch polarity joint fails, work with track maintenance personnel to replace the IJ within 24 hours unless slotting the rail ends will fix the problem.

8.6.16 Compromise Rail Joint Inspections

Compromise joint bars must be inspected more frequently than standard joint bars. Track Inspectors should note their location and visually inspect them frequently.

8.6.17 Torch Cut Rail

Torch cutting rail ends or bolt holes is prohibited in any track, except in the case when making an emergency repair. Trains must be supervised across rail ends with torch cut bolt holes until the torch cut bolt holes are removed. If torch cut rail ends are found in main track place a 25 MPH slow order until torch cut rail ends are removed.

8.6.18 Tie Plates

Place a 25 MPH speed restriction where spikes or other objects are between the base of rail and the tie plate causing a concentrated load.

8.6.19 Rail Fastenings

Rail fastenings are components that maintain gage (spikes, clips, bolts). Where areas of gage widening are found, insufficient or defective fasteners can be considered as a contributing cause. Fastener defects are non-class specific, the remedial action is based on the inspector's judgment regarding the ability of the system to maintain gage.

8.6.20 Road Crossings

The condition of all public road crossings must be monitored. Refer to UPRR Standard Drawing No. 0529 for design and installation requirements for passive public crossing signage (crossbucks with yield sign, or crossbuck with stop sign) and MofW Rule 53.1.1 Road Crossing Condition.

Items include:

- Signage.
- Crossing surfaces.
- Gates.
- Impaired visibility due to vegetation, OTM, ballast piles, or equipment on the railroad right-of-way.

Immediately report any condition that does not comply with Union Pacific Rules and/or Standards. Employees will notify the dispatcher and issue a 15-MPH (XI) track bulletin for the affected crossing whenever the following conditions are found.

- Improper sight clearances to comply with local regulations.
- Vegetation on the right-of-way that obstructs the view of the crossing.
- Vegetation that obstructs the view of warning signs or signals on railroad property.
- Material placed on the right-of-way that obstructs the view of the crossing.
- Broken crossbuck posts.
- Missing/damaged crossbuck signs.
- Missing/wrong multi-track number plates.
- Missing/damaged stop signs attached to the crossbuck post.
- Missing/damaged yield signs attached to the crossbuck post.
- Missing/damaged private crossing sign (other than field to field locations).
- Missing/damaged stop signs attached to private crossing post.
- Missing whistle posts (public crossings).

Note: Signs are considered damaged if they no longer fulfill their intended function.

Document road crossing conditions using the Engineering Track Management System (ETMS).

8.6.21 Bridges

Conditions on bridges that do not comply with FRA TSS require remediation. In addition, the following bridge conditions shall be reported to the appropriate Manager Bridge Maintenance:

- Marginal tie conditions that exist at an open deck bridge.
- Any geometry condition on a bridge could be an indicator of a more severe condition.
- Combustible materials in or around any bridge structure.
- Any drift built up on the up-stream side of bridge.
- Excess silting of water channel.
- Any missing or loose ballast retainers.
- Any damage seen on the superstructure.
- Any evidence of scouring of back wall and piers.

If there is any concern as to the safety of train operations place a slow order or if necessary, remove from service.

8.6.22 Main Line Curves

Track Inspectors must conduct frequent walking inspections of main line curves. Follow these guidelines:

1. Prioritize curves to be walked by using geometry car reports.
2. Document the walking of curves using the Electronic Track Inspection System.
3. Advise the Manager Track Maintenance of all serious track defects requiring prompt corrective action.
4. Inspect for curve movement periodically, especially during periods of large temperature changes. Where the curve has shifted inward more than an average of 2 inches, the curve must be lined out prior to rail temperatures above or forecasted above designated rail laying temperature. If curve is not lined out or de-stressed a speed restriction of 40 MPH or less must be placed.

8.6.23 Critical Lead Inspection and Maintenance Criteria

Table 8-G contains the critical lead inspection criteria that are used for inspecting critical leads. The first column has the *Type of Inspection* that is required. The second column has the *Inspection Frequency*, which is how often the critical lead should be inspected. The third column has the *Inspection Method* that is required to perform the inspection. The last column is the *Inspection Threshold* that is used for the inspection.

All critical leads will be maintained to Class 2 standards. A list of critical leads can be found at the following address:

https://home.www.uprr.com/emp/engineering/apps/efms/trk_inventory/index.cfm

On this page choose “Y” as the option in the “Critical Lead Track Over 50’” dropdown to access a list of critical leads.

Critical leads are defined as "any track / lead in a switching yard either, hump or flat switching, or critical support yard where a derailment would result in a major disruption to customer service or operation of our transportation plan". These critical yards are ones that have high importance to the operation. For example hump leads, trim leads, inbound/outbound leads, flat yard switching leads and power leads.

Critical Lead Inspection Criteria			
Type of Inspection	**Inspection Frequency**	**Inspection Method**	**Inspection Threshold**
Critical lead track inspection	Bi-monthly	Visual	Track Class 2
Gage & crosslevel	Annually	Light track geometry inspection vehicle	Track Class 2
Rail flaw inspection	Annually	Ultrasonic inspection	Track Class 2

Table 8-G

8.7 Turnout Inspection Guidelines

Turnout inspections must ensure that the track is safe for operation at currently authorized speeds. All defects must be recorded. All unsafe conditions found during inspection must be remediated. Standard Work Management on the UPRR Website contains instructions for performing switch inspections. MyUP> UP Way> Standard Work.

8.7.1 Switch Stand

Inspect the following items:

- Operate the switch to ensure correct tension on the stock rails and that throw forces are not excessive. The connecting rod and switch rods shall not contact switch plates or ties.
- Check the switch lock or keeper. If a lock is required, ensure that it is present and operates easily. Replace it as necessary.
- Ensure that the switch latch is fastened down tightly and holds the handle securely in place. The handle should not be able to be raised out of the latch in the locked position. Replace the latch as needed.
- Check the condition of the head block ties.
- Check that the stand is securely fastened.
- Ensure that mast is securely attached to the stand.
- Ensure the stand displays the proper target aspect.
- Check the condition of reflectorized targets. Refer to Section 5.2.2 Switch Targets.
- Refer to Section 5.2.4 Switch Stand Adjustment for adjustment procedures.

8.7.2 Connecting Rod

Inspect the following items:

- Check to see that connecting rod does not contact the head block ties.
- Inspect the connecting rod for excessive wear of bolts and bolt holes.
- Ensure that the switch and connecting rod bolts are inserted with the nut on top of the rods with cotter pins in place.
- Check the condition of the eyebolt, its position in the mast barrel and the condition of the connecting rod and all switch rods.
- Ensure the jam nut is tight against the clevis.
- Refer to Section 5.3.1 Connecting Rods for additional information.

8.7.3 Switch Points

Inspect the following items:

- Ensure that points and stock rails are of the same rail section.
- Check points for chipping at the point end. Unusually chipped or worn switch points must be repaired or replaced.
- Ensure that rail stops are in place and securely fastened.
- Points should have full bearing on the switch plates to prevent the points from pumping under train movement.
- Check that rail braces are tight and well driven, but not overdriven to the extent that rail is canted inward.
- Check all cotter keys.

A recommended monthly practice to monitor switch point and stock rail fit is to apply white spray paint to the location where the switch point contacts the stock rail. Paint 12 inches of the point and of the stock rail. As trains pass over that location, observe the paint wear locations. If the paint is worn off within the first 1 inch of the point, a thorough inspection of the switch area must be made to determine the necessary maintenance required to correct the condition. After repairs are made, repaint and monitor the switch point.

8.7.4 Switch Point Throw

Make sure the switch point throw meets these parameters:

1. Verify the proper switch point throw between the stock rail and the switch point using Table 8-H for specified switches. Use Standard Drawings to reference other switch lengths.

Proper Switch Point Throw Between Stock Rail and Switch			
	39-foot Switch	**30-foot Switch**	**24-foot Switch**
At Point of Switch	4-15/16"	5"	5"
At No. 1 Rod	4-3/4"	4-3/4"	4-3/4"
At No. 2 Rod	4-1/2"	4-1/2"	4-1/2"
At No. 3 Rod	3-7/8"	3-5/8"	3-1/2"
At No. 4 Rod	3-1/6"	2-13/16"	2-3/4"
At No. 5 Rod	2-1/4"	N/A	N/A

Table 8-H

2. On a No. 20 turnout with 39-foot switch points, verify that the switch point fully mates against the stock rail so full head separation occurs approximately 9 inches behind the last switch rod.

8.7.5 Switch Point Fit

Inspect the following items:

- Observe if the points are closing properly. Advise the Signal Maintainer to make any adjustments that are necessary on the power-operated switches.
- Check to see that switch points are not skewed. They must be installed directly opposite each other.
- When switch points are thrown ensure that stock rails do not move when the point makes initial contact.
- Check the throw of the switch points. The correct throw is 4-3/4 inches for hand operated and power switches.

8.7.6 Switch Point Wear

Refer to Section 5.6.2 Switch Points.

8.7.7 Switch Point Guards

Where authorized, measure switch point guards for wear as shown in the standard drawings. If wear is more than the wear limit allowed, the guard can be adjusted or replaced.

8.7.8 Stock Rails

Inspect the following items:

- Check that metal flow on the gage side of stock rails is not more than 1/8 inch.
- Check that stock rail on the turnout side is properly bent to provide a good fit for the switch point.
- Ensure that the stock rail is not curve worn more than 3/16 inch anywhere within 24 inches ahead of the point.

8.7.9 Switch Rods

Inspect the following items:

- Repair or replace transit clips, helper rods, connecting rods and switch rods that are bent or broken.
- Check switch rods for excessive wear in bolt hole areas. Check insulation in insulated rods. Check for excessive wear on rod clips, rod clip bolts and connecting rod bolt.
- Ensure that all bolts are in place. Do not over tighten the bolts connecting the switch rods and transit clips. This connection must be allowed to pivot as the switch is thrown for proper operation.
- Check clearance to avoid contacting ties or ballast. Clean ballast and foreign material out from the connecting rod and switch rod cribs for a distance of 2 inches below the rod.

8.7.10 Switch Plates

Inspect gage plates, riser slide plates, turnout plates, hook-twin tie-plates, frog plates, guard rail plates and tie plates. Inspect for the following items:

- Broken, bent or missing plates.
- Ensure riser plates are securely seated and all braces are tight.
- Gage plates with defective insulation. These must be reported to the Signal Maintainer.
- Riser slide plates and spring frog plates for proper lubrication to permit free movement of switch points and spring wing rail.

8.7.11 Heel Blocks

Inspect the following items:

- Ensure that the heel of the switch point is fully tamped and secure.
- Check the heel block assembly to ensure that the bearing of the switch point is correct in relation to the heel block and to the bent joint bar.
- Check the block assembly for a broken shoulder bolt. Replace bolts where required and maintain them in a tight condition.

8.7.12 Frogs

Inspect the following items:

- Ensure that all bolts and fastenings are of the proper length and diameter and are kept tight. Check for loose bolts in the frog and in the rail joint connections.
- Check each switch, frog, and guard rail for obstructions that may interfere with wheel passage. (snow, ice and other items).
- Keep frog wear within the limits prescribed in FRA 213.137. If the tread portion of the frog casting is worn down 3/8 inch or more below the original contour, the frog should be slow ordered to 10 MPH until repaired. If the frog is located in Class 1 track, note the defect as severe frog condition not otherwise provided (0137E) to facilitate repairs.
- Care should be taken to measure conformal top frogs using the appropriate gages to account for the 1:20 slope. For further details see 5.5.4 – Frog Wear Conformal Frogs.
- Wheel marks in the flangeway indicate a worn frog that needs to be repaired or replaced. Per FRA limits, flangeway depth cannot be less than 1-1/2” (Class 2-5 track) and less than 1-3/8” for Class 1 track.
- Check the frog for alignment and lateral movement, and check for signs of wheel flange contact on the point.
- Check whether the frog point is worn vertically to the maximum wear limit allowed by FRA 213.137. If the point is worn to the maximum wear limit, the frog should be slow ordered to 10 MPH until repaired. If the frog is located in Class 1 track, note the defect as severe frog condition not otherwise provided (0137E) to facilitate repairs.

8.7.13 Spring Frogs

Refer to Chapter 5 for instructions for the inspection and maintenance of Spring Frogs.

8.7.14 Self-Guarded Frog

Inspect the following items:

- Check the wear measurement on raised guards of a self guarded frog. If it exceeds 3/8 inch of original measurement remove from service or if it is deemed safe to operate a 213.9B is required to continue operations, the frog must be repaired or replaced.

8.7.15 Guard Rails

Inspect the following items:

- Check to see that guard rails are properly located in their longitudinal position in relation to the frog point. Also check that guard rails are correctly placed in terms of their lateral position in relation to the gage line of the frog per UPRR Standards.
- The guard check gage for 5/8 inch frog points is 54-5/8 inches from the point of the frog gage line. On heavy point frogs, the check gage is 54-7/16 inches. Heavy point frogs must have 3 welded gage plates in Class 5 track and must be inventoried using the Electronic Track Inspection System.
- Flangeway clearance cannot be less than 1-3/4 inches throughout the guard rail.
- Verify that the guard rails are fully and securely spiked or lagged.

8.7.16 Gage

The standard gage throughout the entire turnout will be 56-1/2 inches. Measure track gage throughout the entire turnout at locations from 4 to 6 ties apart. Look for evidence of movement of the tie plates and calculate the gage under load.

- Two rail lengths ahead of the switch points and behind the frog.
- Check gage at the point of the switch, through to the heel of the switch (checking for movement at rail stops).
- Check gage through the entire length of the frog.
- Check the gage through the turnout on the turnout track and through the turnback curve.

8.7.17 Cross Level

Inspect the following items:

- Measure cross level throughout the turnout at locations from 4 to 6 ties apart.
- Check the turnback curve to ensure that the proper elevation is maintained. Do not allow reverse elevation in the turnback curve.

8.7.18 Surface

Inspect the following items:

- Sight down along the railhead and observe any high or low spots along the track, especially in the switch and frog area. Pay particular attention to surface in the switch area and the toe area of spring frogs.
- Check spots with string line and level board.

8.7.19 Alignment

Inspect the following items:

- Standing ahead of the switch looking toward the frog, look for kinks or line swings.
- Observe the curved closure rails for uniformity of curvature.
- Measure defects by stretching a 62-foot cord along the gage side of the outer rail and measuring the offsets at the center of the cord.

8.7.20 Inspect Switch Ties

Inspect switch ties as follows:

- Check ties, especially head blocks under the switch heel and under the frog, to ensure they are not defective.
- Ensure that there are a sufficient amount of non-defective ties.

8.7.21 Rails

Inspect the following:

- Measure rails for gage face and for vertical head wear, in accordance with the current rail wear limit charts. Also, examine rails for surface defects and signs of internal defects especially at guard rails and stock rails.
- Use an inspection mirror to closer inspect rail in guard rails and tight switch areas.

8.7.22 Rail Anchors

Check that track is properly anchored adjacent to and through turnouts. If ¾ inch or more movement is evident at the switch point, add more anchors to restrain movement.

8.7.23 Ballast

Inspect the following locations to ensure that no loose ballast is present to obstruct closing:

- Between the point and stock rail up to the heel block.
- Around connecting rods and switch rods.
- Spring frog wing rails.
- Point rails of moveable point frogs.

8.8 Annual Switch Inspections

The Annual Switch Inspection is a partnered inspection that Managers and Track Inspectors will perform on all switches in Classes 3 to 6 tracks. Signal personnel will perform similar switch inspections.

8.8.1 Switch Health Rating

Each switch will be assigned a numbered health rating (using a scale of one through three with one being the best rating) based on a 90 day rolling history (that is updated every 30 days) using:

1. Track and Signal inspection defects.
2. Signal Remedy Tickets.
3. Rail Detector Car Defects.
4. Geometry Car Exceptions.

The switch health rating will be used to prioritize the Annual Switch Inspections.

8.8.2 Annual Switch Inspection Responsibilities

MTM\Manager Signal Maintenance (MSM) – Manages and conducts follow-up inspections and quality assurance based on continued poor health ratings. Makes short-term maintenance recommendations. MSM will conduct joint inspections with MTM\TI as required.

DTM\Director Signal Maintenance (DSM) – Monitors process and insures that quality inspections are completed. Provides resources to support maintenance requirements & upgrades.

DTM\MTM\Signal – Inspections will be driven by the health ratings, and will only be required when data indicates critical conditions or to support program planning.

8.8.3 Switch Inspection Guidelines

Annual switch inspections will be made using the following guidelines:

1. MTM and Track Inspector will inspect all Switches in FRA Class 3 through 6 once per year.
   a. Inspection will be documented using the Track Management System (TI) or TMP. (Form 24159 can be used to record field notes).
   b. Any FRA defects found must be recorded and remediated.
   c. A Track Inspector evaluation will be performed during this switch inspection.
2. DTM and MTM joint inspections will be driven by the Health Rating of the Switch.
   a. Switches with a rating between 2 and 3 should be reviewed by the DTM and MTM.
   b. The DTM and MTM will determine if a joint field inspection is required.
3. Joint MTM and MSM inspections will be driven by the Health Rating of the Switch.

Follow-up inspections will target locations where switches have the poorest health ratings.

8.9 Special Inspections

In case of fire, flood, severe storm, earthquake, or other occurrence that might have damaged track structure, conduct a special inspection of the involved track as soon as possible and, if possible, before operating any train over that track.

8.9.1 Special Inspector Qualifications

Employees who perform special inspections of structures and track must meet the qualification requirements of the Federal Railroad Administration (FRA) Track Safety Standards, Sub-part A, Section 213.7 (a or b) and (c) or for Class 6 track Subpart G 213.305(a or b) and (c).

8.9.2 Training

Employees designated as Special Inspectors must successfully complete special inspection training and follow-up refresher training once each calendar year.

- Perform inspections (including applying UPRR Rules 46.2 Storm Conditions and 46.2.1 Patrolling Track).
- Recognize potential unsafe conditions.
- Protect the safe operation of the railroad.

8.9.3 Identification of Structures

In addition to formal training, each Manager Track Maintenance and Manager Bridge Maintenance must perform a joint inspection on Class 3-6 tracks over assigned territories once each calendar year. The objective of each joint inspection is to:

- Locate vulnerable structures. (These structures are found at Engr. Home Page>Structures>Vulnerable Structures).
- Observe conditions on and adjacent to the right-of-way (such as drainage, vegetation, etc.).
- Observe and discuss any roadbed issues which might be candidates for new drainage structures.
- Note changes that should be included in the list of vulnerable structures.
- Discuss precautions to take if structures and track are affected by severe weather, earthquakes, and other conditions that may jeopardize safe train operations.

After completing the joint inspections, the Manager Track Maintenance and the Manager Bridge Maintenance will review their findings with the other Special Inspectors. When possible, they will complete additional joint inspections with other Special Inspectors.

8.9.4 Notification Procedures

When conditions warrant special inspections to protect the safety of train operations, the Dispatching Center will notify critical railroad personnel. The roles and responsibilities for key personnel in the notification process are described below.

When conditions warrant, the Special Inspector may immediately conduct special inspections without waiting for notification from the Dispatching Center.

8.9.5 Initial Notification

The Dispatching Center receives information from four primary sources:

- National Weather Service.
- National Earthquake Information Service/Regional Reporting Sources.
- Mechanical devices (slide warnings, high water detectors, etc.).
- Reports from field personnel/civilians.
- When Dispatching Center personnel receive a warning, they will immediately notify the appropriate Corridor Manager. The Corridor Manager will in turn immediately notify the affected train dispatcher(s).

8.9.6 Notifying Train Crews

The train dispatcher(s) are responsible for notifying train crews operating in the affected areas and for providing crews with the associated time limits of the warning. When contacting train crews, the train dispatcher(s) will advise the crew of the appropriate operating rules in effect to protect train crews and locomotives. These rules may include one or more of the following:

- Rule 6.21 Precautions against Unusual Conditions.
- Rule 6.21.1 Protection against Defects.
- Rule 6.21.2 Water above Rail.

8.9.7 Notifying Maintenance-of-Way Employees

The Corridor Manager, after notifying the train dispatcher(s), will immediately contact the appropriate Manager Track Maintenance in the affected area to arrange for special inspections.

When the Corridor Manager cannot establish contact, for any reason, with the Manager Track Maintenance:

- The Corridor Manager will advise the Maintenance-of-Way Operations Control (MWOC) Desk at the Harriman Dispatching Center of the warning.
- The MWOC Desk will then assume responsibility for notifying an alternate Special Inspector to perform the inspections.
- After contacting an alternate Special Inspector, the MWOC Desk will advise the Corridor Manager that a Special Inspector has been contacted and assigned to perform the special inspections.

8.9.8 Special Inspections—General Requirements

When a Special Inspector is notified that conditions warrant an inspection of track and structures for potential damage from severe weather, earthquakes, and other conditions, the inspector must:

- Begin the inspection when it is safe on the affected territory.
- Refer to the list of vulnerable structures and components on the territory during the inspection.
- Give highest priority to Class 4-6 track, and track carrying passenger trains.

When necessary, directors and managers designated as Special Inspectors may appoint another qualified Special Inspector to perform inspections.

8.9.9 Performing Special Inspections

When performing special inspections, the inspector must:

- Evaluate the condition of track and structures to ensure compliance with FRA Track Safety Standards or Union Pacific Standards, whichever is more restrictive.
- Follow established safety rules and procedures during the inspection.
- Take every precaution to ensure personal safety, regardless of the time required to safely complete the inspection.
- When conditions warrant, immediately initiate special inspections without waiting for Dispatching Center notification.
- Provide the Dispatching Center with frequent status reports on the condition of track and structures in the affected area.
- If the condition of track or structures is questionable, immediately report the location to the Dispatching Center and the immediate Engineering Department Supervisor.
- When required, the affected track will receive the appropriate speed restrictions or be removed from service until repairs are completed. The inspector will determine the frequency of the inspections if the nature and the intensity of the threat to track and structures persist.
- The inspector will determine the condition of the track and structures and report findings to the Dispatching Center before removing the speed restriction or placing the track back into service.

8.9.10 Special Inspections-Storms, Floods, Washouts, Mud/Rock Slides

Violent winds and heavy rains associated with tornadoes and hurricanes pose a potential hazard to track and structures. When a storm, an indication of a storm, or high water may cause an unsafe condition in and around the right-of-way, the inspector must:

- Keep informed of current weather forecasts and conditions.
- Notify the immediate supervisor and Dispatching Center of actions.
- Determine the flood stage and how high the water will crest above or below flood stage in relation to track and structures in the affected area.
- Notify the Dispatching Center and immediate supervisor of potential hazards.
- Continue performing inspections until the hazard no longer exists.

When conducting a special inspection of track and structures, the inspector will check the following:

- Alignment, cross level, and profile of the track.
- Bridge piers, abutments, and bulkheads for signs of scouring.
- Substructure and superstructure for damage from large objects washed into structures.
- Piers, bents, and bridge members for missing components.
- Materials fouling the track, such as trees, pole lines, wires, etc.
- Volume of excessive drift and debris under bridges and in culverts obstructing water flow.

- Slide fences, where installed, for physical damage.
- Signal pole lines for physical damage.

8.9.11 Special Inspections—Right-of-Way Fires

When a fire is reported on or near the right of way that may pose a threat to track and structures, the inspector must conduct a special inspection as follows:

- Obtain the milepost location of the fire from the Dispatching Center.
- Determine whether local fire authorities have been notified and are on the scene or are en route.
- Determine the extent of track and bridge structure involvement in the fire, or risk of involvement if the fire were to spread.
- Immediately notify the Dispatching Center and immediate supervisor when track or structures are on fire.

Assess fire damage to track and structures by checking the following:

- Alignment, cross level, and profile of the track.
- Cross ties, bridge ties, bridge pier supports, and abutments.
- Bridge substructure and superstructure.
- Piers, bents, and bridge members.
- Signal pole lines.
- Slide fences (where applicable).

Continue performing inspections and provide frequent status reports to the Dispatching Center and immediate supervisor until the hazard no longer exists.

8.9.12 Special Inspections—Earthquakes

When an earthquake occurs, each quake's magnitude—or inherent strength—is measured and reported by the National Earthquake Information Service operated by the U.S. Geological Survey in Golden, Colorado.

The Richter scale gauges the energy released by an earthquake, as measured by the ground motion recorded on a seismograph. The magnitude of an earthquake is the same no matter where one is located. Its intensity—or the degree to which it is felt in a specific location—varies depending on one's distance from the earthquake's epicenter, or focus.

When an earthquake is reported, the Dispatching Center notifies the Maintenance-of-Way Special Inspectors to begin inspections and to indicate the boundaries of the inspection area. Use the criteria in Table 8-I to determine whether a special inspection is warranted.

Magnitude	Initiate Inspection	Criteria/Action
Unknown	Yes	Field reports ground shaking in a geographic area. Trains stop within 50-mile radius of reported shaking.
0.0 to 4.9	No	No action required.
5.0 to 5.4	Yes	When track is within a 30-mile radius of the epicenter, trains in affected area slow to restricted speed.
5.5 to 5.9	Yes	When track is within a 50-mile radius of the epicenter, trains stop in the affected area.
6.0 to 6.9	Yes	When track is within a 100-mile radius of the epicenter, trains stop in the affected area.
7.0 and above	Yes	When track is within a 150-mile radius of the epicenter, trains stop in the affected area.

Table 8-I

When notified, inspectors must be prepared to perform special inspections to identify hazards and take precautions to protect the safety of trains operating in the affected areas.

When conducting a special inspection, check the following:

- Materials fouling the track, such as trees, pole lines, wires, etc.
- Alignment, cross level, and profile of the track.
- Bridge piers, abutments, and bulkheads for signs of structural damage.
- Substructure and superstructure for damage from large objects falling into structures.
- Piers, bents, and bridge members for missing components.
- Signal outages and malfunctions.
- Slide fences, where installed, for physical damage.

8.9.13 Special Inspections - Hot Weather Inspections

Refer to Chapter 7 - Hot Weather Inspections for instructions.

Inspectors must place temporary speed restrictions, if required, to protect areas of tight rail. If necessary, track must be removed from service until rail is adjusted.

When documenting heat inspections, the inspector must write heat inspection in the comments of the inspection report.

8.9.14 Special Inspections - Cold Weather Inspections

Refer to Chapter 7 - Cold Weather Inspections for instructions.

On main tracks, cold weather inspections must be performed as directed by the Director Track Maintenance.

Inspect for:

- Broken rails
- Pull-aparts
- Curve movement
- Wide gap between rail-ends
- Bent bolts
- Cracked or broken joint bars
- Canted rail

When documenting cold weather inspections, the inspector must write cold inspection in the comments of the inspection report.

8.10 FRA Inspection Guidelines

Track and Signal FRA Inspectors can make unannounced or unaccompanied track inspections. Union Pacific will cooperate with reasonable requests to accompany inspection officials during these visits. Managers are to make every attempt to accompany FRA inspectors.

To minimize conflicts with previously scheduled railroad functions:

- Request that, except in emergencies, the FRA or State Inspector provide at least 1 week advance notice for inspections.

If a FRA or State Inspector arrives unannounced and request that railroad personnel accompany him or her, the railroad manager will:

- Cooperate as long as scheduled commitments are not compromised. An unannounced FRA or State inspector’s visit does not automatically take priority over all other employees’ duties.
- Reschedule the inspection if the manager cannot accompany the inspector because of prior commitments.
- If the manager cannot arrange some form of company representation, inform the inspector to proceed alone if the inspection cannot be rescheduled.

8.10.1 Identifying Exceptions - Defects

A defect is a condition that does not comply with FRA minimum track/signal safety standards. The FRA Inspector will indicate a defect when there are no checks marked in the violations recommended section on the FRA Inspection Report. If the FRA Inspector indicates a defect, the company representative must prescribe appropriate remedial action immediately.

8.10.2 Identifying Exceptions - Violations

A violation is an FRA enforcement activity that results in civil penalties. Violations generally are recommended when track/signal defects are noted that present a safety hazard to trains and/or the public, or a pattern of repeated or willful non-compliance exists. The FRA Inspector will indicate a violation when “yes” is checked in the violations recommended section on the FRA Inspection Report. If the FRA Inspector indicates a violation, the company representative will prescribe appropriate remedial action immediately.

8.10.3 Violation Penalties

All track/signal violations are referred back to the FRA, which will assess fines of up to $25,000 per violation per day against the railroad. Penalties may be assessed against individuals for willful violations, and, in the case of gross negligence or repeated violations causing imminent hazard, or has caused death or injury, penalties may be up to $105,000. Railroad companies are subject to a $25,000 maximum fine per occurrence if they require or permit an employee who is installing, repairing, or maintaining a signal system to go on duty or remain on duty in violation of the Hours of Service Act.

All employees are subject to federal penalties if they willfully falsify track/signal inspection or hours of service records.

8.10.4 FRA Reports

Whenever an FRA Inspector completes an inspection, an FRA report will be provided to the company representative. All defects recorded by the FRA Inspector must be remediated immediately, if needed, and corrected as soon as possible. Reports will be entered into the Track/Signal Maintenance Planner as soon as possible by the designated employee via e-email address frasnelling@yahoo.com or by fax number 402-271-4081.

8.10.5 FRA Report- Railroad Follow-Up Instructions

After reviewing the FRA Inspection Report, the Manager Track/Signal Maintenance will complete the follow-up to the FRA Report as follows:

1. Enter the type of remedial action taken, using the remedial action codes for each item number.
2. Enter the completion date for each item number.
3. Sign and date the form.
4. Send copy of completed form to the Director of Track/Signal Maintenance.
5. **All completed FRA reports are required to be returned to the FRA.** Mail to the address listed on the reverse side of the form.

8.10.6 FRA Report - Violations

Union Pacific has implemented a web based FRA violation management system. All corrective actions and supporting documents are to be entered in the FRA Violation Management System. Go to the Track Maintenance Planner (TMP)> FRA Reports> FRA Inspection Search> FRA Inspection.

When a violation is issued, Manager Track/Signal Maintenance will:

1. Enter the type of remedial action taken on the hard copy of the FRA Inspection Report, using the remedial action codes for each item number.
2. Enter the completion date for each item number.
3. After all remedial action codes and completion dates have been entered; send the original form to the Director of Track/Signal Maintenance.
4. Record the corrective action and supporting documents in the FRA Inspection Database. TMP > FRA Reports Tab> FRA Inspection Search .

Director Track/Signal Maintenance will:

1. Review, sign and date the FRA Inspection Report.
2. Forward the copy of the FRA Inspection Report where violations are noted to the Chief Engineer upon receipt.
3. Return the FRA Inspection Report where violations are noted to the FRA within 30 days after the end of the month the violation was written.

8.10.7 FRA Violation Investigation Procedures

If the FRA Inspector indicates a violation, the Manager Track/Signal Maintenance will:

1. Investigate every violation.
2. Take photographs of exception. Pictures should include:
   - General area of alleged violation.
   - Actual measurements or conditions (level board, tape measure, etc.).
3. When taking pictures of cross tie violations use the following procedure:
   - 0109B4-Number crossties in sequence for a 39 foot segment (pictures should be taken of no more than 4 ties in a row).
   - 0109B1, 0109B2– Number the sequence of the tie cluster, including geometry measurements and overall track surface and tie conditions (pictures should be taken of no more than 4 ties in a row).
   - 0109B3– Distance measurement to nearest effective tie and overall tie conditions at the joint.
4. In addition to the FRA report, prepare a detailed written report explaining the circumstances regarding the violation, including:
   - Time and date of the FRA inspection.
   - Photographs, sketches, or measurements.
   - Names of all Track Inspectors/Signal Maintainers over defined section of track during the previous 3 months.
   - General track/signal conditions.
   - History of prior defects in vicinity of the location.
   - Proposed corrective/disciplinary action, if necessary.
5. Upload the report and attachments into the FRA Inspection Database and forward a copy of the report and attachments to the Chief Engineer, Director Track/Signal Maintenance and the Track Inspection/Signal FRA Compliance team in Omaha within 15 days of the date of the violation.

8.10.8 FRA Requests for Information

All FRA requests for information must be submitted in writing to the AVP Engineering Maintenance with the exception of the following:

1. Track
   a. Timetables/Slow Orders/General Orders (when performing inspections).
   b. Lists of 213.7 designated employees.
   c. FRA Track Inspection Records (1 Year from date of review).
   d. Rail Inspection Records (2 years from date of review).
   e. Cut in/Cut out reports (1 Year from date of review).
   f. Joint bar inspection frequency reports. (1 Year from date of review)
2. Signal
   a. Timetables/Slow Orders/General Orders (when performing inspections).
   b. Signal Inspection records (2 Years from date of review).

If there are any questions regarding requests for information or location of official reports contact Track/Signal Inspection Compliance Team.

8.10.9 FRA Electronic Inspection Record Review Guidelines

FRA Inspectors are to review inspection reports at Service Unit headquarters. When FRA inspectors request electronic viewing of the records, a railroad representative will provide access to the Union Pacific Engineering Portal. Each FRA region has a unique USER ID that corresponds with the region (e.g., FRAREG5) Use this as the USER ID and as the password to logon. Records are to be viewed from the terminal and can only be printed in cases where non-compliance needs to be documented. If paper reports were used to document inspections, they must be maintained at the Service Unit headquarters, and provided to the FRA to supplement electronic records.

8.10.10 Signal Inspection Intervals and Record Keeping

For signal and train control system inspection intervals and record keeping instructions, refer to Union Pacific Railroad Signal Inspection and Maintenance Instructions and to the Standard Signal Drawings.

8.11 Required Field Documentation – FRA Compliance

Employees must be able to produce the following items for the FRA, if duties require.

1. Rule Books – Must have copy of GCOR/MW Rule Book, CE Bulletins, Timetable, Special Instructions, General Orders, Written CWR Procedures, FRA 213 Track Safety Standards and Signal Maintenance Instructions/Standard Drawings.
2. On-Track Safety Qualification Card.
3. FRA 213.7 (and for Class 6 track 213.305) Qualification Card – to be carried by employees who either inspect track or perform repairs that require placing or removing slow orders.
4. Statement of On Track Safety (If using individual Train Detection).
5. Machine operators' inspection log book – Updated and kept in machine.
6. Operators Manual (Equipment) – Safe operation instructions.
7. Hy-rail Inspection Logbook – Required to be kept in the vehicle and completed on a daily basis.
8. Working radio – Must have access when using On-Track Safety.

8.12 Derailment Investigation

Refer to Union Pacific's Derailment Cause-Finding and Prevention, (PB-21818). Form can also be found at MyUP > Reference > Derailment Investigation System > Post Derailment Track Geometry Measurement Sheet.

8.13 Track Maintenance Planner – Engineering Defect Management Guidelines

The Track Maintenance Planner (TMP) is the official tool at the UPRR for managing overall Track Maintenance Activities. It also includes the legally required FRA record keeping for all track maintenance activities. It is the accountability of all track maintenance personnel that manage track maintenance, perform inspections or complete repairs to provide timely and accurate reporting in the TMP.

Defect and Exception Overview:

The TMP has the ability to manage multiple defects or exception types. These include:

1. FRA Defects – Support 213 Criteria
   - Found by Track Inspector or Other MOW Personnel
   - Found by Rail Test Operations
   - Found by FRA Inspectors
2. Critical Defects
   - Found by the EC Car in accordance with FRA and UPRR regulations
3. Urgent Exceptions
   - Found by the EC Car and should be repaired

4. TMP Items
   - Exceptions or conditions found that require corrections to ensure they do not become FRA or Critical Defects
5. Informational Items
   - Items populated by various sources that provide the MTM with information that may help identify conditions or prioritize work

Defect Management Guidelines:

1. FRA and Critical Defects require specific remediation reporting and closure
   - Remediation of all FRA defects should be documented in the TMP within 5 business days of the defect report
   - Remediation of all Critical geometry exceptions should be completed in the TMP within 5 business days of the defect report
   - Defects should be "Closed" by the gang or work group that completes the field repair as part of daily production reporting
   - Track Inspectors should only close defects they find and repair
   - MTM's can close exceptions in the TMP but will be required to provide a specific closure code and field validation code
   - DTM's should review with MTMs at least every 30 days to ensure proper management of exceptions
   - 213.9b and Scheduled for Repair Remedial Defects – must be repaired or the track removed from service within 30 days
2. Urgent Exceptions – May not require remedial action (slow orders)
   - Urgent geometry exceptions should be closed by the gang that completes the field repairs
   - MTM can close exceptions but a specific closure code and validation are required
3. TMP Items – Require no remedial action and are scheduled and managed by the MTM
   - Should be closed by the gang that completes the field repairs
   - MTM can close items that are no longer valid – closure comment required
4. The TMP has automated closure capabilities and will close targeted FRA Defects (properly remediated), and Critical defects (properly remediated) that are within the limits of program maintenance work or by the most recent Geometry Car run
5. The Automated Closure process will not close any CWR Adjust events. These events will need to be closed by the MTM. The MTM is required to provide a specific closure code and comments.

Defect and Exception Closure:

Beginning February 1, 2015 all FRA, Critical, Urgent and TMP items in the Track Maintenance Planner will require a specific Closure Code in order to complete the closure of the item.

All items repaired or field verified by Service Unit or section gangs should be closed by the gang that completes the repair/verification in Production Reporting. The closure codes in Production Reporting include:

- Repair Completed
- Field Verified – Defect/Exception Not Found
- Track Removed from Service/Retired
- Field Verified – Repair Completed by Other Gang
- Duplicate Defect or Exception

Defects or Exceptions Closed in the TMP by the MTM or Track Inspector will require the following:

1. Closure Code Selection
   a. Repair Complete*
   b. Repaired by Program Work*
   c. Field Verified – Defect\Exception Not Found *
   d. Track Removed from Service/Retired *
   e. TMP Item – No Longer Valid
   f. Urgent Defect – Scheduled for Program Maintenance
   g. TMP Item – Scheduled for Program Maintenance
   h. Duplicate Defect or Exception
2. Closure codes above with an asterisk (*) will require an additional details including:
   - Gang that Completed Repair (Item a, b)
   - Who Field Verified (Item a, b, c)
   - Who removed from service (Item d)

GLOSSARY

This section includes definitions of terms relating to track work, switches, frogs, guard rails, crossings, and turnouts.

Abutment

A substructure composed of stone, concrete, brick, or timber supporting the end of a span.

Adjustable Separator

A metal block or two or more parts acting as a filler between the running rail and the guard rail and designed to provide varying widths of flangeway.

Alignment

The horizontal location of a railroad as described by curves and tangents.

Alloy Steel

Steel to which has been added silicon, manganese, nickel, or other elements to give greater strength, or impart other desirable properties for a particular use.

Angle Bar

One of two bars used to join two rail ends together to form continuous track.

Auxiliary Track

Any track not otherwise specified that directly connects to any main track, siding or industrial lead where cars or locomotives are left standing.

Ballast

Material selected for placement on the roadbed for the purpose of holding the track in line and at surface.

Ballast Section

A vertical cross section of the track from the subballast up, including ballast.

Bolted Rail Crossing

A crossing in which all the running surfaces are of rolled rail, the parts being held together with bolts.

Bolted Rigid Frog

A frog built essentially of rolled rails, with fillers between the rails, and held together with bolts.

Branch Line

The secondary line or lines of a railway.

Buckled Track

A major irregularity in track alignment caused by excessive compression in the rails. See also Thermal Misalignment.

Cant

The tilt or inclination on a surface.

Center Frogs

The two frogs at the opposite ends of the short diagonal of a crossing.

Classification Track

One of the tracks in a classification yard, or a track used for classification purposes.

Classification Yard

A rail yard consisting of a number of usually parallel tracks, used for making up trains.

Clearance Point

The location behind a turnout where track centers reach 13 foot. Exception: Yard tracks that have designed track centers of 12 foot 6 inches.

Closure Rails

The rails located between the parts of any special trackwork layout, as the rails between the switch and the frog in a turnout (sometimes called the lead rails or connecting rails); also the rails connecting the frogs of a crossing or adjacent crossings.

Company Material

Material transported by a particular railroad such as rail, cross ties, ballast, fuel oil, etc., used in connection with its operations.

Compound Curve

A continuous curve composed of two or more different curves put together with no tangent in between them, curving in the same direction.

Compromise Joint (Trackwork)

A rail joint between rails of different height and section, or rails of the same section but of different joint drillings.

Compromise Rail

A relatively short section of rail where one end is forged to a different section of rail.

Conformal Frog

A frog with a 1:20 sloped running surface designed to better fit the profile of wheels.

Connecting Rod

The rod that connects the switch stand and switch rod.

Connecting Track

A track defined as such in EFMS and the Track Inspection System, usually a track or a wye that connects two subdivisions or railroads.

Continuous Welded Rail (CWR)

Rail length that is 400 feet or longer.

Controlled Siding

A siding within CTC or Interlocking limits where a signal indication authorizes the siding's use.

Creosote

A tar distillate produced by high-temperature carbonization of bituminous coal and used in wood treatment.

Crib

The lateral space between two railroad ties.

Cross Level

The distance one rail is above or below another. This should not be confused with superelevation on curves.

Cross Tie

The transverse member of the track structure to which the rails are spiked or otherwise fastened to provide proper gage and to cushion, distribute, and transmit the stresses of traffic through the ballast to the roadbed.

Crossing (Rail)

A structure, used where one track crosses another at grade, consisting of four connected frogs.

Crossing Plates

Plates interposed between a crossing and the ties or other timber to protect the ties and to better support the crossing by distributing the loads over larger areas.

Crossover

A combination of two switches that connect two adjacent tracks.

Crossover, Double

Two crossovers that intersect between the connected tracks.

Crossover, Universal

Two crossovers in opposite directions.

Curve, Compound

A continuous change in direction of alignment by means of two or more contiguous simple curves of different degrees having a common tangent at their junction points.

Curve, Degree of

The angle subtended at the center of a simple curve by 100 ft. chord.

Curve, Reverse

Two contiguous simple curves in opposite directions, with a common tangent at their junction point.

Curve, Simple

A continuous change in direction of alignment by means of an arc of a single radius.

Curve, Vertical

A transition in the track to connect two intersecting grade lines.

Curved Closure Rail

The rail between the switch point and frog on the diverging side of a turnout.

Curved Lead

The distance between the actual point of the switch and the half-inch point of the frog, measured on the outside gage line of the turnout.

Departure Track

One of the tracks in a departure yard on which outgoing cars are placed.

Departure Yard

A rail yard where trains are assembled and made ready for departure.

Derail

A safety device, attached to one rail of a siding or storage track that will cause a car to be derailed in the event it rolls free towards a main track where it could cause a major accident.

Derailment

Anytime the wheels of a car or engine come off the head of the rail.

Drift Pin

A special railroad tool of round steel tapered for insertion to align holes by striking the large end.

Drill Track

A track connecting with the ladder track, over which locomotives and cars move back and forth in switching.

Dutchman

Short piece of rail that can be used to reduce the gap between rails ends. Used to make emergency or temporary movement of trains over a wide joint gap. Must be used within the limits of joint bars.

Easer Rail (or Easer)

A rail placed with its head along the outside and close up to the head of the running rail and sloped at the ends to provide a bearing for the overhanging portion of hollowed-out treads of worn wheels.

Elevation (of Curves) Superelevation

The vertical distance that the outer rail is above the inner rail.

End Frogs

The two frogs at the opposite ends of the long diagonal of a crossing.

Expansion Shim

Spacer inserted between ends of abutting rails while track is being laid to provide allowance for expansion of steel when temperature changes.

Facing Point Switch

A track switch, the points of which face traffic approaching in the direction for which the track is signaled.

Fastenings

Joint bars, bolts, clips, lag screws and spikes.

Fastenings, Auxiliary

Locknuts, spring washers, tie plates, rail braces, cotter pins and anti-creeping devices.

Federal Railroad Administration (FRA)

An agency of the U.S. Department of Transportation with jurisdiction over matters of railroad safety.

Fiber Optics

Light transmission through very fine flexible glass rods.

Field Side

The side of a rail opposite the gage side.

Field Weld

A weld joining two rails together after rails are installed in track.

Filler Block (Trackwork)

A steel block molded and designed to keep uniform the angle spread between lead and turnout rails and frogs, etc.

Flange Lubricator

A device by which either grease or oil can be applied to the flanges of a locomotive driving wheel for the purpose of preventing flange wear and cutting. Rail lubricators, mounted along the rail in high curvature territory are also used to apply lubricant to passing flanges to reduce both wheel and rail wear.

Flangeway

The open way through a track structure that provides a passageway for wheel flanges.

Flangeway Depth

The depth of the wheel flange passageway.

Flangeway Width

The distance between the gage line and the guard line of a track structure, which provides a passageway for wheel flanges.

Flare

A tapered widening of the flangeway at the end of the guard line of a track structure, as at the end of a guard rail or at the end of a frog or a crossing wing rail.

Flare Opening

The distance between the gage line and the guard line of a track structure at the wider end of the flare.

Flat Yard

A yard where car switching is dependent on locomotive power with little assistance from gravity.

Foot Guard

A filler for the space between converging rails to prevent human feet from becoming accidentally wedged between the rails.

Fouling Point

The location behind turnouts that measures 50 feet beyond the clearance point.

Frog

A track structure used at the intersection of two running rails to provide support for wheels and passageways for their flanges, thus permitting wheels on either rail to cross the other.

Frog Angle

The angle formed by the intersecting gage lines of a frog.

Frog Heel

The end of a frog furthest from the switch, or opposite the point end.

Frog Number

The ratio of the spread to the length of the frog.

Frog Plates

Any specially designed plate used between the toe and heel of a frog.

Frog Point

The part of a frog lying between the gage lines extending from their intersection toward the heel end.

(a) Theoretical Point

The point of intersection of the gage lines of a frog.

(b) Half-Inch Point

A point located at a distance from the theoretical point towards the heel equal in inches to one-half the frog number, and at which the spread between the gage lines is one-half inch. It is the origin from which measurements are made.

(c) Actual Point

The physical location of the point of frog. This is called the 5/8” point.

Frog, Throat

The point at which the converging wings of a frog are closest together.

Frog, Toe

The end of a frog nearest the switch.

Fusee

A warning device consisting of a cardboard tube filled with a combustible mixture of chemicals that burns brightly when ignited and remains burning for varying lengths of time. Fusees are ignited and dropped on the right-of-way to indicate to a following train the presence of stopped or slow-moving equipment ahead.

Gage (Track)

See Standard Gage.

Gage Line

A line 5/8 in. below the top of the center line of head of running rail along the side nearer the center of the track.

Gage Plate

A metal plate, extending from rail to rail, used to maintain gage of track.

Gage Rod

A device for holding track to correct gage, generally consisting of 1-1/4-in. rod with a forged jaw on one end and a malleable jaw on the other end, adjustable through a lock nut.

Gauntlet Track

A section of railroad track (as over a bridge or in a narrow pass) where two lines of track overlap so that one rail of each track is within the rails of the other. In such cases no switch is needed. The crossing of the two inner rails is made by ordinary frogs.

Geotextile

A material designed to permit the passage of water through it, but not particles of soil or dirt carried by the water. Used under ballast to function as a subballast. Also used to wrap corrugated or loose jointed pipe and to line drainage trenches or French drains. Also called “filter fabric” or “engineering fabric.”

Grade (Degree Of)

As used in connection with railway line, the rise or fall in a track expressed as a ratio to 100 feet of horizontal track.

Grade Crossing

An intersection of a highway with a railroad at the same level.

Guard Check Gauge

The distance between guard line and gage line, measured across the track at right angles to the gage lines.

Guard Face Gauge

The distance between guard lines, measured across the track at right angles to the gage lines.

Guard Line

A line along the side of the flangeway that is nearer the center of the track and at the same elevation as the gage line.

Guard Rail

A rail or other structure laid parallel with the running rails of a track to prevent wheels from being derailed; or to hold wheels in correct alignment to prevent their flanges from striking the points of turnout or crossing frogs or the points of switches. A rail or other structure laid parallel with the running rails of a track to keep derailed wheels adjacent to running rails.

Guard Rail (Frog)

A rail or other device to guide the wheel flange so that it is kept clear of the point of the frog.

Guard Rail (Switch)

A rail or other track structure laid parallel with the running rail ahead of a split switch and forming a flangeway with the running rail, to hold the wheels of rolling stock in correct alignment when approaching the switch.

Guard Rail Brace

A metal shape designed to fit the contour of the side of the guard rail and extend over the tie, with provision for fastening thereto, to restrain the moving or tilting of the guard rail away from the running rail.

Guard Rail Brace, Adjustable

A guard rail brace, which may be adjustable laterally with respect to the rail, to vary the distance between the guard rail and the running rail.

Guard Rail Clamp

A device consisting of a yoke and fastenings designed to engage the running rail and the guard rail and hold them in correct relation to each other.

Guard Rail, One-Piece

A guard rail consisting of a single complete unit, either fabricated or cast, designed so that no auxiliary parts or fastenings other than spikes are required for its installation.

Head Rod

A rod connecting the points of a switch or movable point frog, by means of which the relative location of the points is maintained and to which the operating rod is attached.

Head Separation

The point on a switch rail where the head of the rail attains its full width.

Head Block Ties

The ties to which a switch stand is attached.

Heel (of Frog)

The end of the frog farthest from the switch.

Heel Block

A steel block, through which bolt holes are drilled, that is placed between the heel of a switch point and its stock rail.

Heel Length

The distance between the heel end and the half-inch point of a frog, measured along the gage line.

Heel Spread

The distance, at the heel, between the gage line of a switch rail and the gage line of its stock rail. (This has been standardized at 6-1/4 in. for AREMA style switches.)

House Track

A track diverging from the main track or siding used to set out cars or store equipment.

Hump

The hill over which cars are pushed for classification in a hump yard.

Industrial Track

A switching track serving industries, such as mines, mills, smelters, and factories.

Insulated Rail Joint

A joint in which electrical insulation is provided between adjoining rails.

Insulated Switch

A switch in which the fixtures, principally the gage plates and the switch rods, connecting or reaching from one rail to the opposite rail, are provided with insulation so that the electric track circuit will not be shunted.

Insulation

A device or material that prevents the flow of electric current in a track circuit from passing from one rail to the other or through switches and other track structures.

Joint Bar

A steel bar commonly used in pairs for joining rail ends in railroad track.

Joint Gap

The distance between the ends of rails joined by joint bars.

Joint Rail Drilling

The spacing of holes in the ends of rails or other track structures to receive the bolts for fastening joint bars.

Joint, Permanent

A rail joint that will remain in track.

Joint, Rail

The area of fastenings and rail where rail ends meet.

Joint, Supported

A rail joint that sits directly on top of a tie.

Joint, Suspended

A rail joint that sits between two consecutive ties.

Knuckle Rail

A bent rail, or equivalent structure, forming the obtuse point against which the movable center points, of a movable point crossing or slip switch, rest when set for traffic.

Lead (Actual)

The length between the actual point of the switch and the half-inch point of the frog measured on the line of the main track.

Lead (Theoretical)

The distance from the theoretical point of switch to the theoretical point of the frog, measured on the line of the main track.

Lead Track

An extended track connecting to a series of yard tracks.

Line

The condition of the track with regard to uniformity in direction over short distances on tangents, or uniformity of curvature over short distances on curves.

Lock Nut

A special type of nut with a feature that prevents the nut from turning off the bolt once it is secured. Lock nuts are not reusable since removing them generally destroys the locking feature.

Lock Rod

A rod, attached to the front rod or lug of a switch, movable point frog, or derail, through which a locking plunger may extend when the switch points or derail are in the normal or reverse position.

Lock Washer

A washer designed to prevent undesired loosening of a nut after it has been tightened.

Main Track (Line)

A track extending through yards and between stations that must not be occupied without authority or protection. (General Code)

Manganese Steel

Steel containing a high percent of manganese; an alloy of steel to increase hardness and wear resistance.

Manganese Steel Insert Crossing

A crossing in which a manganese steel casting is inserted at each of the four intersections, being fitted into rolled rails and forming the points and wings of the crossing frogs.

Manganese Tipped Switch

A split switch in which the head of one or both of the switch rails is cut away in the point portion and manganese steel insert is fastened to the rail to form the point.

Monday Maul

Sledge hammer.

Movable Center Point

One of the movable tapered rails of a movable point crossing or slip switch.

Movable Point Frog

A frog equipped with points that are movable in the same manner as the points on a switch.

Movable Point Crossing

A crossing of small angle in which each of the two center frogs consists essentially of a knuckle rail and two opposed movable center points with the necessary fixtures.

Passing Track

A track to the main track for meeting or passing trains. Today this is called a siding.

Planing, Bottom

The cut planed at an angle on the bottom of the base of the switch rail from the point and towards the heel to allow the switch rail to rest on the top of the base of the stock rail when the switch rail is closed.

Planing, Chamfer Cut

The vertical beveling of the gage side of the switch point to produce a sharp edge that prevents wheel flanges from striking the point.

Planing, Side

The cuts made on the sides of the head of the switch rail to form the taper.

Planing, Top

The cut made on the top of the head of the switch rail from the point and to approximately the head separation.

Point of Switch (Actual)

The end of the switch rail farther from the frog; the point where the spread between the gage lines of the stock rail and the switch rail is sufficient for a switch point.

Point of Switch (Theoretical) of Vertex

The point where the gage line of the switch rail, if extended, would intersect the gage line of the stock rail.

Point Rail, Switch Rail, or Switch Point

The tapered rail of a split switch.

Pull-Apart

A condition that exists at a rail joint when all the bolts in one rail end are missing and the two rail ends have gapped.

Rail

In track, a rolled steel shape, commonly a T-section, designed to be laid end to end in two parallel lines on cross ties or other suitable supports to form a track for railway rolling stock.

Rail Anchor

A device attached to the base of a rail bearing against a cross tie to prevent the rail from moving longitudinally under traffic.

Rail Bond

A short metal cable attached to adjacent rails at the joints to ensure proper electrical continuity across the joint.

Rail Brace

A bracing device used at switches, movable point frogs, etc., in combination with switch, tie, or gage plates for holding the rail from lateral roll.

Rail Brace (Switch)

A metal shape designed to fit the contour of the side of the stock rail and extend over the switch plate, with provision for fastening through the plate to the tie, to restrain the lateral roll of the stock rail.

Rail Brace, Adjustable (Switch)

A rail brace that may be adjusted laterally with respect to the stock rail, to compensate for variations in the dimensions of the rail and to permit adjusting for wear.

Rail Creep

Longitudinal sliding of rails in track under traffic or because of temperature changes.

Rail Joint

A fastening designed to unite the abutting ends of contiguous rails.

Rail Lubricator (Flange)

A device designed to apply grease to the gage side of the rail head at the beginning of a curve, to minimize wear of the rail and wheel flange or to eliminate noise.

Rail Lubricator (Top of Rail)

A device designed to apply lubrication to the top of the rail head to minimize wear of the rail and reduce lateral forces, or to eliminate noise.

Railbound Manganese Steel Frog

A frog consisting essentially of a manganese steel body casting fitted into and between rolled rails and held together with bolts.

Reinforcing Rail

A bent rail placed with its head along the outside or close up to the head of a knuckle rail to strengthen it and to act as an easer rail; or a piece of rail similarly applied to a movable center point.

Relay Rails

Rails taken up from tracks where formerly used, suitable for relaying in other tracks.

Retarder

A braking device, usually power operated, built into a railway track to reduce the speed of cars by means of brake-shoes which, when set in braking position, press against the sides of the lower portions of the wheels.

Reverse Elevation

In curved track, when the outer rail is lower than the inner rail.

Right of Way

The strip of land on which a railroad track is built.

Rip Track

A car repair facility with one or more tracks.

Roadbed

The foundation upon which the ballast, ties and rails of a railroad are laid.

Running Rail

a.) The rail or surface on which the tread of the wheel bears.

b.) Longitudinal movement of rail caused by an insufficient fastening system.

Running Track

A track reserved for movement through a yard.

Scale Track

A track leading to and from, and passing over a track scale.

Screw Spike

A cylindrical threaded spike, designed to be turned with a special wrench into holes bored in ties, to secure rails or to act as a tie plate holder.

Section Limits

A division of railroad into specific territories for maintenance purposes. Sections are usually inspected and maintained by an assigned group of men.

Self-Guarded Frog (Flange Frog)

A frog provided with guides or flanges, above its running surface, which contact the tread rims of wheels for the purpose of safely guiding their flanges through the frog.

Side Track

An auxiliary track to the main track.

Siding

A track connected to the main track and used for meeting or passing trains. Locations of sidings are shown in the timetable. (General Code)

Slide Fence

A fence interconnected to the signal system placed at the bottom of a cut to warn trains of rock slides by the use of signal indication.

Slip Switch, Double

A combination of a rail crossing and two turnouts interconnected into one assembly.

Slip Switch, Single

A combination of a rail crossing and one turnout interconnected into one assembly.

Snow Fence

A barrier placed along the right of way to prevent blowing snow from drifting onto the track.

Solid Manganese Steel Frog

A frog consisting entirely of a single manganese steel casting.

Special Trackwork

Any trackwork consisting of more than two rails and ties. Examples are turnouts, switches and crossing frogs.

Specification

A set of instructions that provide the requirements of a material to be manufactured or constructed.

Spike

A long steel square nail with a cutting edge used to fasten track components in place.

Spiked Switch

A switch whose points are held in fixed position by a spike to prevent the switch from being thrown or to prevent trains from using track that has been taken out of service.

Spiral

The gradual and uniform increase and decrease of curvature between the tangent and the full curve.

Split Switch

A track structure consisting of two movable point rails and necessary fixtures used to divert rolling stock from one track to another.

Split Switch with Graduated Risers

A split switch in which the switch points are gradually elevated by means of graduated riser plates until they reach the required height above the stock rail.

Split Switch with Uniform Risers

A split switch in which the switch points have a uniform elevation on riser plates for the entire length of the switch, the point rail rise being run off back of the switch points in the closure rails.

Spring Rail Frog

A frog with a movable wing rail that is held against the point rail by springs, thus making an unbroken running surface for wheels using one track, whereas the flanges of wheels on the other track force the movable wing rail away from the point rail to provide a passageway.

Spring Rail Frog, Right-Hand and Left-Hand

Standing at the toe end of a spring rail frog and looking toward its point, a right-hand frog has the movable wing rail located on the right-hand side, and a left-hand frog has the movable wing rail located on the left-hand side.

Spring Switch

A switch with a spring mechanism that returns the switch points to the original position after they are trailed through.

Spring Washer

A component designed to apply compressive force to prevent reverse movement of a nut.

Spur

A single-ended track diverging from a main or other track.

Standard Gage

The standard distance between rails of North American railroads: 4 ft. 8-1/2 in. measured between the inside faces of the rail heads 5/8 in. below the top of the rail.

Stock Rail

The rail against which the point of a switch or derail fits.

Stock Rail Bend

The bend placed in the stock rail at or near the switch point to match the switch rail angle.

Storage Track

A track on which cars are placed when awaiting disposition or when not in service.

Straight Closure Rail

The rail between the switch point and frog on the straight side of a turnout.

String Lining

a.) A method to determine the alignment of a curve by measuring offset from a string line to the gage side of the high rail.

b.) When a train pulls it’s consist off the low side of a curve.

Stripped Joint

See Pull-Apart.

Subballast

Any material spread on the finished subgrade of the roadbed below the ballast to provide better drainage, prevent upheaval by frost, and better distribute the load over the roadbed.

Subgrade

The finished surface of the roadbed below the ballast and track.

Sun Kink

See *Thermal Misalignment*.

Switch

A track structure with movable rails to divert rolling stock from one track to another.

Switch Angle

The angle included between the gage lines of the switch rail at its point and the stock rail.

Switch Circuit Controller

A device connected at the point to switch, derail, or moveable point frog which will electrically indicate an open switch condition when the switch point is open 1/4" or more.

Switch Heater

A device that will heat the area around a switch to melt snow and ice.

Switch Heel

The designated location on the switch point where the heel block is located.

Switch Machine

A machine used to throw track switches. Switch machines can be powered operated or used manually.

Switch Plate

Any specially designed tie plate for use in the switch area of a turnout.

Switch Point

A machined rail with a sharp end mated against a stock rail used to divert rolling stock from one track to another.

Switch Point Derail

A device consisting of at least one switch point for the intended purpose of derailing rolling stock.

Switch Point Protector

A device that diverts a rolling wheel away from the switch point.

Switch Rail Brace

A brace placed against a running rail to dissipate lateral force thus preventing rail turnover.

Switch Rod

A rod connecting the two points of a switch which maintains the proper distance between the points.

Switch Stand

A device for the manual operation of a switch.

Switch Tie

Ties made of various lengths used in a switch, turnout or special trackwork.

Tangent

A section of track that connects two curves.

Thermal Misalignment

An irregularity in track alignment caused by excessive compressive forces in the rail.

Thermite Weld

A weld, made by pouring molten materials into the gap between rail ends, that fuses the rail ends together.

Throat of Frog

The location ahead of the point at which the wing rails of a frog are closest together.

Throw of Switch

The distance between the back of the open switch point and gage line of the stock rail measured along the center line of the No. 1 switch rod. (This distance is standardized at 4-3/4 in.)

Tie Pad

A dampening device located between the rail and the tie.

Tie Plate

A steel plate between a rail and a tie.

Tie Plug

A wood or composite material used to fill holes in ties from which spikes have been removed.

Toe (of Frog)

End of a frog nearest the switch.

Toe Length

The distance between the toe end of the frog and the half-inch point of the frog, measured along the gage line.

Track

An assembly of rails, ties, ballast and fastenings over which cars, locomotives, and trains are moved.

Track Bolt

A bolt with a button head and oval, or elliptical neck, and a threaded nut designed to fasten rails and joint bars.

Track Crossing (slang; Diamond)

A track component consisting of four connected frogs that permits one track to cross another at grade.

Track Shims

Flat wood boards of length and width similar to tie plates. They are placed between the ties and the tie plates when the ballast is frozen to correct surface irregularities.

Transition Rail (Trackwork)

A manufactured rail using the same rail section that is machined to compensate for various amounts of rail head loss.

Tread

a.) The top surface of the rail that contacts the wheel.

b.) The portion of the wheel that contacts the top of the rail.

Turnback Curve

The curve(s) directly behind the diverging side of a turnout.

Turnout

A section of trackwork that allows rolling stock to be diverted from one track to another.

Turnout, Panel

A pre-assembled turnout complete or in sections.

Turnout Plates

Any specially designed tie plate used between the heel of the switch point and toe of the frog.

Turnout Number (Size)

The number corresponding to the size of the frog used in the turnout.

Washout

An erosion of the permanent roadbed by storm or flood.

Wheel Flange

The portion of the wheel that protrudes down from the wheel tread to guide rolling stock along the track.

Wide Gage

Any gage wider than standard gage caused by track deterioration or improper installation.

Wye

A track arrangement shaped like the letter Y but with a connecting segment between the two upper legs to enable the turning of equipment.

Yard

A system of tracks, other than main tracks and sidings, used for making up trains, storing cars, and other purposes.

NOTES

APPENDIX

A.1 Typical Construction Costs 2
A.2 Typical Labor Rates of Pay 3
A.3 Derailment Estimating Costs 4
A.4 Track Material Weights and Measures 5
A.5 Conversion Chart for Changing Decimal Miles into Linear Feet 7
A.6 Conversion Table for Equivalent Measurements of Fractions/Decimals/Millimeters 8
A.7 Conversion Table for FRA Defect Codes 9

A.1 Typical Construction Costs

INSTALL TRACK			COST/TF	COST/MILE
SH CWR		20 ties/39' (Laid in panels and relaid)	$129.06	$681,437
New CWR		24 ties/39' (Laid in panels and relaid)	$217.65	$1,149,192
New CWR HH		2640 Concrete Ties/mile	$185.25	$978,120
INSTALL 136/141# PREPLATED TURNOUTS				
(Includes labor & materials for turnout and ballast.)				**COST/**
(Does not include any money for removal or signal costs)				**TURNOUT**
	No, 7	PPTO Yard Standard - RBM Frog		$83,964
	No. 9	PPTO Yard Standard - RBM Frog		$99,379
	No. 11	PPTO Yard Standard - SMSG Frog		$112,985
	No. 11	PPTO Wood - XLRBM Frog		$123,407
	No. 11	PPTO Conc. ML Standard - XLSR Frog		$138,454
	No. 15	PPTO Wood Tie-XLSR		$153,493
	No. 15	PPTO Wood Tie - XLRBM Frog		$138,352
	No. 15	PPTO Conc. ML Standard - XLSR Frog		$165,735
	No. 20	PPTO Wood - XLRBM Frog		$243,430
	No. 20	PPTO Wood XLSR Frog		$271,232
	No. 20	PPTO Conc. MPF		$258,613
	No. 24	PPTO Concrete MPF		$431,424
	No. 30	PPTO Conc. Premium MPF		$509,880
UNLOAD AND PLACE ONE CAR OF BALLAST (YARD TRACK)				**COST/**
				CAR
(Includes unload, place, surface and line, WTS)				$2,130
UNLOAD AND PLACE BALLAST FOR ONE TURNOUT				
				COST/
(Includes labor & material)				**TURNOUT**
	No, 7	(1 car)		$4,950
	No. 9	(1.33 cars)		$5,125
	No. 11	(2 cars)		$5,325
	No. 15	(3 cars)		$8,427
	No. 20	(4 cars)		$9,827
	No 24	(5 cars)		$11,227
	No. 30	(6 cars)		$17,053
Source: Misc. Notes - Engr. Project Management (MAS) 01/01/2012				

APPENDIX

A.2 Typical Labor Rates of Pay

FOREMAN	Straight Time	Over Time
B & B	$23.96	$35.94
System Steel Gang	$27.56	$41.34
Tie, Curve, or Surfacing Gangs	$26.39	$39.59
Steel Erection	$25.53	$38.30
Water Service	$26.07	$39.11
Section Foremen (Main Line)	$24.09	$36.14

OPERATORS	Straight Time	Over Time
REO (Class 1)	$25.20	$37.80
TMO	$23.48	$35.22
SPTMO	$23.85	$35.78
RPTMO	$23.20	$34.80
RPTO	$23.09	$34.64

TRUCK DRIVERS	Straight Time	Over Time
Semitrailer	$24.89	$37.34
2 Ton or More	$23.86	$35.79
Sectionman Truck Operator	$23.36	$35.04

LABORERS	Straight Time	Over Time
B & B	$21.18	$31.77
Track Extra Gang	$21.03	$31.55
Sectionman	$21.32	$31.98

SIGNAL	Straight Time	Over Time
Signal Maintenance Foreman **	$29.36	$44.04
Signal Maintainer	$26.88	$40.32
Signalman	$25.45	$38.20
Asst. Signalmen	$23.13	$34.70

NOTE : ** Monthly Salary

Source: GMS 390 ROSTERS 09/01/11

A.3 Derailment Estimating Costs

	DESCRIPTION	UNIT	LABOR*	MATERIAL	TOTAL
	Track Panels	Each	$2,000	$3,500	$5,500
	#11 Turnout including switch ties	Each	$46,000	$92,000	$138,000
	#15 Turnout including switch ties	Each	$50,000	$109,000	$159,000
	#20 Turnout including switch ties	Each	$96,000	$126,000	$222,000
	Switch Machine	Each	$19,250	$22,458	$41,708
	Ties - 8 ft.	Each	$124	$43	$167
	Ties - 9 ft.	Each	$124	$43	$167
	Ballast (Car) including WTS	Each	$1,400	$700	$2,100
	CWR - 1440 ft. strings	Each	$14,000	$40,000	$54,000
	Crossing Protection (2 Gates)	Each	$53,400	$91,043	$144,443
	Crossing Protection (2 Flashers)	Each	$37,050	$57,859	$94,909
	Electric Lock	Each	$43,055	$38,887	$81,942
	Intermediate Signal (B/B) Single Trk.	Each	$33,051	$41,920	$74,971
	Intermediate Signal (B/B) Double Trk.	Each	$57,350	$68,737	$126,087

NOTE: These unit costs should not be used for any purpose other than for derailment/accident cost estimating as they were prepared by reviewing typical derailment costs and factors such as use of non-production gangs, substantial overtime, etc. are included.

* Direct labor only (no additives applied)
Source: Engr. Proj. Management 01/01/2012 (ECB)

APPENDIX

A.4 Track Material Weights and Measures

Rail	Size	Wt. Per 39ft (lbs.)	Tons/Mile
All types	141	1829	123.8
	136	1768	119.68
	133	1729	117.04
	115	1495	101.20
Ties	**Size**	**Weight (lbs.)**	**No./Track Mile**
Softwood cross tie	7"x 9"x 9'	190	3249
Hardwood cross tie	7"x 9"x 9'	285	3249
Softwood switch tie	7"x 9"	21 lbs/ft	
Hardwood switch tie	7"x 9"	32 lbs/ft	
Concrete cross tie	9" x 11" x 8'6"	700	2640
Concrete switch tie	9 1/2" x 11 1/4"	106 lbs/ft	
Steel cross tie 8'6"	10 mm	180	
Steel cross tie 8'6"	12 mm	211	2640
Steel switch tie	12 mm	23.5 lbs/ft	
OTM	**Size**	**Weight (lbs)**	**Packaging**
Tie Plate	7 3/4" x 16"	27.6	6000/carload
	8" x 16" cast	23.8	7000/carload
	8" x 14"	22.3	7500/carload
	7 1/2" x 13"	19.6	8500/carload
Track Spike	6" x 5/8"	0.83	220/keg
Track Bolt w/ nut and washer	1 1/8" x 6 1/2"	3.13	50/keg
	1 1/16" x 6"	2.4	50/keg
	1" x 6"	2.38	50/keg
	7/8" x 5"	1.48	50/keg
Joint Bar			
Std. Steel	136/141 lb rail	59	Pair
	133 lb rail	58.5	Pair
	115 lb rail	53.5	Pair
Insulated poly	133 lb rail	54.5	Pair
	115 lb rail	50.1	Pair
Rail anchor			
Bar Stock (Unit)	6" base	2.094	50/bag
Bar Stock (Unit)	5 1/2" base	1.96	50/bag
Safelok 1 Spring Clip		1.6	50/bag
Safelok 1, 3 Part Ass'y	6" base	1.1	40/box
Safelok Std. Insulator		0.1	200/bag
Safelok HD Insulator		0.5	50/bag
Safelok III Spring Clip		1.75	50/bag
Safelok III , 3 Part Ass'y		1.05	40/box
Frogs	**Size**	**Weight (lbs)**	**Packaging**
#9 SGSM	133#	1810	ea.
#10 RBM	115#	3575	ea.
#10 RBM	133#	4800	ea.
#10 Plate Pkg.	133#	889	ea.
#10 Spring	133#	6200	ea.
#11 RBM	136#	5823	ea.
#11 Spring	141#	6800	ea.
#14 RBM	133#	4900	ea.
#14 Spring w/plates	133#	8220	ea.
#15 RBM	136#	6317	ea.
#15 Spring	141#	6680	ea.
#16 RBM	115#	6720	ea.
#20 RBM	133#	12700	ea.
#20 MPF	133#	13000	ea.
#24 MPF	!41#	14000	ea.
#30 MPF w/ base plate	133#	15000	ea.

Track Material Weights and Measures, continued

Switch Points	**Size**	**Weight (lbs)**	**Packaging**
16'6" extended	133#	2050	ea.
16' 6" extended	136#	2070	ea.
19' 6" extended	141#	2200	ea.
24' extended	133#	2100	ea.
26" extended	141#	2200	ea.
39' extended	133#	2400	ea.
39' extended	141#	2482	ea.
Adj. Guard Rail Ass'y	**Size**	**Weight (lbs)**	**Packaging**
13'	113/141#	1011	ea.
19' 6"	133/141#	1632	ea.
26'	133/141#	2450	ea.
Transition Rails	**Size**	**Weight (lbs)**	**Packaging**
141 to 133 Comp/Transition	141# to 133#	1775	ea.
141 to 132 Transition	141# to 132#	1792	ea.
136 to 115 Comp/Transition	136# to 115#	1000	ea.
Ballast	**Size**	**Weight (lbs)**	**Packaging**
Class 1	2 1/4- 3/4	2450 lbs/yd^3	72 yd^3/carload
Class 2	1 3/8 - 3/8	2450 lbs/yd^3	72 yd^3/carload
Class 3	3/4 minus	2550 lbs/yd^3	72 yd^3/carload
Rip Rap	**Size**	**Weight (lbs)**	**Packaging**
Class 1	Less than 200 lbs	2450 lbs/yd^3	54 yd^3/air dump
Class 2	200 To 1000 lbs.	2450 lbs/yd^3	54 yd^3/air dump
Class 3	1000 to 4000 lbs.	2450 lbs/yd^3	54 yd^3/air dump
Class 4	Over 4000 lbs.	2450 lbs/yd^3	54d^3/air dump

A.5 Conversion Chart for Changing Decimal Miles into Linear Feet

DECIMALS OF A MILE IN FEET							
Decimal Miles	Feet	Decimal Miles	Feet	Decimal Miles	Feet	Decimal Miles	Feet
0.01	53	0.26	1373	0.51	2693	0.76	4013
0.02	106	0.27	1426	0.52	2746	0.77	4066
0.03	158	0.28	1478	0.53	2798	0.78	4118
0.04	211	0.29	1531	0.54	2851	0.79	4171
0.05	264	0.30	1584	0.55	2904	0.80	4224
0.06	317	0.31	1637	0.56	2957	0.81	4277
0.07	370	0.32	1690	0.57	3010	0.82	4330
0.08	422	0.33	1742	0.58	3062	0.83	4382
0.09	475	0.34	1795	0.59	3115	0.84	4435
0.10	528	0.35	1848	0.60	3168	0.85	4488
0.11	581	0.36	1901	0.61	3221	0.86	4541
0.12	634	0.37	1954	0.62	3274	0.87	4594
0.13	686	0.38	2006	0.63	3326	0.88	4646
0.14	739	0.39	2059	0.64	3379	0.89	4699
0.15	792	0.40	2112	0.65	3432	0.90	4752
0.16	845	0.41	2165	0.66	3485	0.91	4805
0.17	898	0.42	2218	0.67	3538	0.92	4858
0.18	950	0.43	2270	0.68	3590	0.93	4910
0.19	1003	0.44	2323	0.69	3643	0.94	4963
0.20	1056	0.45	2376	0.70	3696	0.95	5016
0.21	1109	0.46	2429	0.71	3749	0.96	5069
0.22	1162	0.47	2482	0.72	3802	0.97	5122
0.23	1214	0.48	2534	0.73	3854	0.98	5174
0.24	1267	0.49	2587	0.74	3907	0.99	5227
0.25	1320	0.50	2640	0.75	3960	1.00	5280

A.6 Conversion Table for Equivalent Measurements of Fractions/Decimals/Millimeters

FRACTIONS-DECIMALS-MILLIMETERS					
FRACTION	DECIMAL	MM	FRACTION	DECIMAL	MM
1/64	0.01563	0.396	33/64	0.51563	13.096
1/32	0.03120	0.793	17/32	0.53125	13.493
3/64	0.04680	1.190	35/64	0.54688	13.890
1/16	0.06250	1.587	9/16	0.56250	14.287
5/64	0.07810	1.984	37/64	0.57813	14.684
3/32	0.09370	2.381	19/32	0.59375	15.081
7/64	0.10938	2.778	39/64	0.60938	15.478
1/8	0.12500	3.175	5/8	0.62500	15.875
9/64	0.14063	3.571	41/64	0.64063	16.271
5/32	0.15625	3.968	21/32	0.65625	16.668
11/64	0.17188	4.365	43/64	0.67188	17.065
3/16	0.18750	4.762	11/16	0.68750	17.462
13/64	0.20313	5.159	45/64	0.70313	17.859
7/32	0.21875	5.556	23/32	0.71875	18.256
15/64	0.23438	5.953	47/64	0.73438	18.653
1/4	0.25000	6.350	3/4	0.75000	19.050
17/64	0.26563	6.746	49/64	0.76563	19.446
9/32	0.28125	7.143	25/32	0.78125	19.843
19/64	0.29688	7.540	51/64	0.79688	20.240
5/16	0.31250	7.937	13/16	0.81250	20.637
21/64	0.32813	8.334	53/64	0.82813	21.034
11/32	0.34375	8.731	27/32	0.84375	21.431
23/64	0.35938	9.128	55/64	0.85938	21.828
3/8	0.37500	9.525	7/8	0.87500	22.225
25/64	0.39063	9.921	57/64	0.89063	22.621
13/32	0.40625	10.318	29/32	0.90625	23.018
27/64	0.42188	10.715	59/64	0.92188	23.415
7/16	0.43750	11.112	15/16	0.93750	23.812
29/64	0.45313	11.509	61/64	0.95313	24.209
15/32	0.46875	11.906	31/32	0.96875	24.606
31/64	0.48438	12.303	63/64	0.98438	25.003
1/2	0.50000	12.700	1	1.00000	25.400

A.7 Conversion Table for FRA Defect Codes

New FRA Code		Previous Code	
213.4	**Excepted Track**	**213.4**	**Excepted track**
0004A	Excepted track segment not identified in appropriate record.	4.01	Excepted track segment not identified in appropriate record.
0004B	Excepted track segment located within 30 feet of an adjacent track subject to simultaneous operation at speeds in excess of 10 mph.	4.02	Excepted track segment located within 30 feet of an adjacent track subject to simultaneous operation at speeds in excess of 10 mph.
0004C	Excepted track not inspected in accordance with § 213.233(c) and 213.235 as specified for Class 1 track.	4.03	Excepted track not inspected in accordance with §213.233(c) and 213.235 as specified for Class I track.
0004D	Train speed exceeds 10 mph on excepted track.	4.04	Train speed exceeds 10 mph on excepted track.
0004E1	Occupied passenger train operated on excepted track.	4.05	Occupied passenger train operated on excepted track.
0004E2	Freight train operated on excepted track with more than five cars required to be placarded in accordance with 49 CFR Part 172.	4.06	Freight train operated on excepted track with more than five cars required to be placarded in accordance with 49 CFR Part 172.
0004E3	Train with a car required to be placarded by 49 CFR Part 172 operated over excepted track within 100 feet of a bridge or in a public street or highway.	4.07	Train with a car required to be placarded by 49 CFR ·-·· Part 172 operated over excepted track within 100 feet of a bridge or in a public street or highway.
0004F	Failure to notify FRA of removal of trackage from excepted status.	4.08	Failure to notify FRA of removal of trackage from excepted status.
213.5	**Responsibility for Compliance**		N/A
0005A	Failure of owner to either bring track into compliance, halt operations, or operate subject to the conditions of this Part.		N/A
213.7	**Designation of qualified persons to super-vise certain renewals and inspect track**	**213.7**	**Designation of qualified persons to super-vise certain renewals and inspect track**
		7.01	**Reserved**
0007A2	Failure of track owner to have persons demonstrate required knowledge, ability to detect deviations and prescribe remedial action, inspection.		N/A
0007A3	Failure of person to have written authorization for restoration and renewal.	7.02	Failure of track owner to designate qualified persons to supervise restorations & renewals
0007B	Failure of track owner to use qualified persons to inspect track.	7.06	Failure of track owner to designate qualified persons to inspect track for defects.
0007B2	Failure of track owner to have persons demonstrate required knowledge, ability to detect deviations and prescribe remedial action, restoration and renewal.		N/A
0007B3	Failure of person to have written authorization for inspection.		N/A
0007C	Failure of track owner to use qualified persons to inspect, restore or renew CWR.		N/A
0007C2	Failure to complete comprehensive CWR training course.		N/A
0007C3	Failure of track owner to have persons demonstrate required knowledge, ability to detect deviations, CWR.	7.03	Failure to use qualified person to pass trains over broken rails or pull aparts.
0007C4	Failure of person to have written authorization to inspect, restore or renew CWR.		N/A

APPENDIX

New FRA Code		Previous Code	
0007D	Failure of track owner to use not fully qualified persons to pass trains over broken rails or pull aparts.		N/A
0007D2	Train speed exceeds 10 mph over broken rails or pull aparts.	7.04	Train speed exceeds 10 m.p.h. over broken rails or pull aparts.
0007D3	Person not watching or prepared to stop train movements over broken rails or pull aparts.		N/A
0007D4	Failure to promptly notify and dispatch person(s) fully qualified under § 213.7 to the location of the broken rail or pull apart.	7.05	Failure to promptly notify and dispatch person fully qualified under §213.7 to the location of the broken rail or pull apart.
0007E	Failure of track owner to properly maintain written records of designation and basis for each designation.	7.07	Failure of track owner to properly maintain written records of designation.
213.9	**Classes of track; operating speed limits**	**213.9**	**Classes of track; operating speed limits**
0009B1	Failure to restore other than excepted track to compliance with Class 1 standards within 30 days after a person designated under § 213.7(a) has determined that operations may safely continue over defect(s) not meeting Class 1 or excepted track standards.	9.01	Failure to restore other than excepted track to compliance with Class I stds. within 30 days after a per-son designated under §213.7(a) has determined that operations may safely continue over defect(s) not meeting Class I or excepted track stds.
0009B2	Failure of track owner to enforce, over Class 1 defects, the limiting conditions imposed by person designated under § 213.7(a).	9.02	Failure of track owner to enforce, over Class I defects, the limiting conditions imposed by person designated under §213.7(a).
		9.03	Reserved
213.11	**Restoration or renewal of track under traffic conditions**	**213.11**	**Restoration or renewal of track under traffic conditions**
0011	Proper qualified supervision not provided at work site during work hours when track is being restored or renewed under traffic conditions.	11.01	Proper qualified supervision not provided at work site during work hours when track is being restored . or renewed under traffic conditions.
213.13	**Measuring track not under load**	**213.13**	**Measuring track not under load**
0013	Failure to add dynamic movement to static measurement	13.01	Failure to add dynamic movement to static measurement
213.33	**Drainage**	**213.33**	**Drainage**
0033A1	Drainage or water-carrying facility not maintained.	33.01	Drainage or water-carrying facility not maintained.
0033A2	Drainage or water-carrying facility obstructed by debris.	33.02	Drainage or water-carrying facility obstructed by debris.
0033A3	Drainage or water-carrying facility collapsed.	33.03	Drainage or water-carrying facility collapsed.
0033A4	Drainage or water-carrying facility obstructed by vegetation.	33.04	Drainage or water-carrying facility obstructed by vegetation.
0033A5	Drainage or water-carrying facility obstructed by silting.	33.05	Drainage or water-carrying facility obstructed by silting
0033A6	Drainage or water-carrying facility deteriorated to allow subgrade saturation.	33.06	Drainage or water-carrying facility deteriorated to allow subgrade saturation.
0033A7	Uncontrolled water undercutting track structure or embankment.	33.07	Uncontrolled water undercutting track structure or embankment.
213.37	**Vegetation**	**213.37**	**Vegetation**
0037A	Combustible vegetation around track-carrying structures.	37.01	Combustible vegetation around track-carrying structures.
0037B1	Vegetation obstructs visibility of railroad signs and fixed signals.	37.02	Vegetation obstructs visibility of railroad signs and fixed signals.
0037B2	Vegetation obstructs visibility of grade crossing warning signs and signals by the traveling public.	37.10	Vegetation obstructs visibility of grade crossing warning signs and signals by the traveling public.

New FRA Code		Previous Code	
0037C1	Vegetation interferes with railroad employees performing normal trackside duties.	37.04	Vegetation interferes with railroad employees per-forming normal trackside duties.
0037C2	Vegetation obstructs passing of day and night signals by railroad employees.	37.03	Vegetation obstructs passing of day and night signals by railroad employees.
0037C3	Excessive vegetation in toepaths and around switches that interferes with employees performing normal trackside duties.	37.08	Excessive vegetation in toepaths and around switch-es that interferes with employees performing normal trackside duties.
0037D	Vegetation prevents proper functioning of signal and/or communication lines.	37.05	Vegetation prevents proper functioning of signal and/or communication lines.
0037E1	Excessive vegetation at train order office, depot, interlocking plant, a carman's building, etc., prevents employees on duty from visually inspecting moving equipment when their duties so require.	37.06	Excessive vegetation at train order office, depot, interlocking plant, a carman's building, etc., prevents employees on duty from visually inspecting moving equipment when their duties so require.
0037E2	Excessive vegetation at train meeting points prevents proper inspection by railroad employees of moving equipment.	37.07	Excessive vegetation at train meeting points prevents proper inspection of moving equipment by railroad employees.
0037E3	Vegetation brushing sides of rolling stock that prevents employees from visually inspecting moving equipment from their normal duty stations.	37.09	Vegetation brushing sides of rolling stock that pre-vents employees from visually inspecting moving equipment from their normal duty stations
213.53	**Gage**	**213.53**	**Gage**
0053A	Gage measurement improper		N/A
0053B1	Gage dimension on tangent track exceeds allowable.	53.01	Gage dimension exceeds allowable on tangent track.
0053B2	Gage dimension on tangent track is less than allowable	53.02	Gage dimension is less than allowable on tangent track.
0053B3	Gage dimension on curved track exceeds allowable	53.03	Gage dimension exceeds allowable on curved track.
0053B4	Gage dimension on curved track is less than allowable	53.04	Gage dimension is less than allowable on curved track.
0053B5	Gage dimension for excepted track exceeds allowable	53.05	Gage dimension exceeds allowable for excepted track.
213.55	**Alinement**	**213.55**	**Alinement**
0055A1	Alinement deviation of tangent track for a 62-foot chord exceeds allowable	55.01	Alinement deviation of tangent track exceeds allowable.
0055A2	Alinement deviation of curved track for a 62-foot chord exceeds allowable.	55.02	Alinement deviation of curved track exceeds allowable for a 62-foot chord.
0055A3	Alinement deviation of curved in Class 3-5 track for a 31-foot chord exceeds allowable.	55.03	Alinement deviation of curved track exceeds allowable for a 31-foot chord.
213.57	**Curves; elevation and speed limitations**	**213.57**	**Curves; elevation and speed limitations**
		57.01	**Reserved**
0057A1	Maximum crosslevel on a curve in Class 1 and 2 track exceeds allowable.	57.06	Maximum crosslevel on curve exceeds allowable.
0057A2	Maximum crosslevel on curve in Class 3-5 track exceeds allowable.		N/A
0057B1	Operating speed exceeds allowable for 3-inches of unbalance, based on curvature and elevation.	57.02	Operating speed exceeds allowable for 3-inches of unbalance, based on curvature and elevation.
0057C1	Operating speed exceeds allowable for 4-inches of unbalance, based on curvature and elevation.	57.03	Operating speed exceeds allowable for 4-inches of unbalance, based on curvature and elevation.

New FRA Code		Previous Code	
0057D	Operating speed exceeds allowable for a FRA approved unbalance based on curvature and elevation for contiguous high speed track exceeds allowable.	57.04	Operating speed exceeds allowable for a FRA approved unbalance based on curvature and elevation approved for track contiguous to high speed track.
		57.05	**Reserved**
213.57	**Elevation of curved track; runoff**		N/A
0059A	Where fixed physical conditions are not considered, operating speed based on curvature and actual minimum elevation in a curve exceeds allowable		N/A
0059B	Improper elevation runoff in a spiral exceeds allowable		N/A
213.63	**Track surface**	**213.63**	**Track surface**
0063A1	Runoff in any 31-feet of rail at end of raise exceeds allowable.	63.01	Runoff in any 31-feet of rail at end of raise exceeds allowable.
0063A10	Crosslevel differences in all of six or more consecutive pairs of staggered joints in Class 2-5 track exceeds allowable.	63.13	Crosslevel differences for six or more consecutive pairs of staggered joints exceeds allowable.
0063A2	Deviation from uniform profile on either rail exceeds allowable.	63.02	Deviation from uniform profile on either rail exceeds allowable.
0063A3	Deviation from zero crosslevel at any point on tangent track exceeds allowable	63.05	Deviation from zero crosslevel at any point on tangent exceeds allowable.
0063A4	Reverse crosslevel on curve track exceeds allowable	63.10	Reverse elevation on curve exceeds allowable.
0063A5	Difference in crosslevel (warp) between any two points less than 62-feet apart on tangent track exceeds allowable.	63.07	Difference in crosslevel between any two points less than 62-fect apart on tangents exceeds allowable.
0063A6	Difference in crosslevel (warp) between any two points less than 62-feet apart on curve track between spirals exceeds allowable.	63.08	Difference in crosslevel between any two points less than 62-fect apart on curves between spirals exceeds allmvable.
0063A7	Difference in crosslevel (warp) between any two points less than 62-feet apart on spiral track exceeds allowable.	63.09	Difference in cross level between any two points less than 62-fect apart on spirals exceeds allowable.
0063A8	Variation in crosslevel per 31-feet on a physically restricted length spiral exceeds allowable.	63.11	Deviation in crosslevel per 31-fcet exceeds allowable on restricted length spiral.
0063A9	Where elevation at any point in curve track equals or exceeds six inches, the difference in crosslevel within 62-feet between that point and a point with greater elevation exceeds allowable	63.12	Difference in crosslevel within 62-fect between a point on a curve that equals or exceeds 6-inches and a point with greater elevation exceed allowable.
		63.03	**Reserved**
		63.04	**Reserved**
		63.06	**Reserved**
213.103	**Ballast; general**	**213.103**	**Ballast; general**
0103A	Fouled or insufficient ballast failing to transmit and distribute loading	103.01	Insufficient Ballast
0103B	Fouled or insufficient ballast failing to restrain the track laterally, longitudinally or vertically.	103.02	Fouled Ballast
0103C	Fouled ballast failing to provide adequate drainage for the track.		N/A
0103D	Fouled or insufficient ballast failing to maintain proper geometry.		N/A
213.109	**Crossties**	**213.109**	**Crossties**
0109A	Crossties made of unsound material		N/A

New FRA Code		Previous Code	
0109B1i	39-foot segment of track does not have sufficient number of crossties to provide effective support to hold gage within limits prescribed in § 213.53(b).		N/A
0109B1ii	39-foot segment of track does not have sufficient number of crossties to provide effective support that will maintain surface within the limits prescribed by § 213.63.		N/A
0109B1iii	39-foot segment of track does not have sufficient number of crossties to provide effective support that will maintain alinement within the limits prescribed by § 213.55.		N/A
0109B2	Crossties not effectively distributed to support a 39-foot segment of track.	109.03	Crossties not effectively distributed to support a 39-foot segment of track.
0109B3	No effective support ties within the prescribed distance from a joint.	109.02	No effective support ties within the prescribed distance from a joint.
0109B4	Failure to maintain the minimum number of crossties per FRA track class for each 39-foot segment of track as indicated in table in this section.	109.05	Fewer than minimum allowable number of non-defective ties per 39 feet for turnouts and curved track over 2 degrees.
		109.04	Fewer than minimum allowable number of non-defective ties per 39 feet for tangent and curved track less than 2 degrees.
0109C1	Crossties, other than concrete, that meet the minimum requirements of § 213.109(b)(4), are broken through.		N/A
0109C2	Crossties, other than concrete, that meet the minimum requirements of § 213.109(b)(4), are split or otherwise impaired to the extent the crosstie will allow the ballast to work through, or it will not hold spikes or rail fasteners.		N/A
0109C3	Crossties, other than concrete, that meet the minimum requirements of § 213.109(b)(4), are so deteriorated that the crosstie plate or base of the rail can move laterally 1/2-inch relative to the crosstie.		N/A
0109C4	Crossties, other than concrete, that meet the minimum requirements of § 213.109(b)(4), are cut by the crosstie plate through more than 40 percent of a crosstie's thickness.		N/A
0109D1	Concrete crosstie broken through or deteriorated to the extent that prestressing material is visible		N/A
0109D2	Concrete crosstie deteriorated or broken off in vicinity of shoulder or insert so fastener assembly can pull or move laterally more than 3/8-inch relative to crosstie		N/A
0109D3	Concrete crosstie deteriorated such that base of either rail can move laterally more than 3/8-inch relative to crosstie on curves of 2 degrees greater; or can move laterally more than 1/2-inch relative to crosstie on tangent track or curves of less than 2 degrees		N/A

New FRA Code		Previous Code	
0109D4	Concrete crosstie deteriorated or abraded at any point under the rail seat up to a depth of 1/2-inch or more		N/A
0109D5	Concrete crosstie deteriorated such that the crosstie's fastening or anchoring system, including rail anchors, is unable to maintain longitudinal rail restraint, or maintain rail hold down, or maintain gage due to insufficient fastener toehold		N/A
0109D6	Concrete crosstie configured with less than two fasteners on the same rail except as provided in § 213.127(c)		N/A
0109G	Track constructed without crossties does not effectively support track structure.	109.05	Track constructed without crossties does not effectively support track structure.
		109.01	**Operating speed exceeds allowable for a FRA approved unbalance based on curvature and elevation approved for track contiguous to high speed track.**
213.110	**Gage restraint measurements systems**	**213.110**	**Gage restraint measurements systems**
0110A	Failure to maintain and operate GRMS within minimum design requirements over designated GRMS line segments	110.05	Failure to maintain and operate GRMS within mini-mum design requirements over designated GRMS line segments.
0110A1	Failure to notify FRA at least 30 days prior to the designation of a GRMS line segment	110.01	Failure to notify FRA at least 30 days prior to the designation of a GRMS line segment.
0110A2	Failure to notify FRA at least 10 days prior to the removal of a line segment from GRMS designation	110.02	Failure to notify FRA at least 10 days prior to the removal of a line segment from GRMS designation.
0110B1	Failure to provide required information identifying a GRMS line segment	110.03	Failure to provide required information identifying a GRMS line segment.
0110C	Failure to provide sufficient technical data to establish compliance with minimum GRMS design requirements	110.04	Failure to provide sufficient technical data to establish compliance with minimum GRMS design requirements.
0110G	Failure of GRMS to provide analog trace of specified parameters	110.06	Failure of GRMS to provide analog trace of specified parameters
0110H	Failure of GRMS to provide exception report listing of specified parameters	110.07	Failure of GRMS to provide exception report listing of specified parameters.
0110I	Failure to provide exception report listing to Part 213.7 individual prior to next inspection required under § 213.333	110.08	Failure to provide exception report listing to § 213.7 individual prior to next inspection required under§ 213.233.
0110J1i	Failure to maintain and make available documented calibration procedures on GRMS vehicle	110.09	Failure to maintain and make available documented calibration procedures on GRMS vehicle.
0110J1ii	Failure to initiate a daily instrument verification procedure	110.10	Failure to initiate a daily instrument verification procedure.
0110J2	Failure to maintain PTLF accuracy within five-percent of 4,000 reading	110.11	Failure to maintain PTLF accuracy within five-per-cent of 4,000-pound reading.
0110K	Failure to meet training requirements.	110.13	Failure of GRMS training program to meet minimum requirements.
0110L	Failure to initiate required remedial action for exceptions listed on GRMS record of lateral restraint	110.15	Failure to initiate required remedial action for exceptions listed on GRMS record of lateral restraint.
0110M1i	Gage widening exceeds allowable measured with PTLF	110.16	Gage widening exceeds allowable measured with PTLF.
0110M5	Failure to provide functional PTLF to § 213.7 individual whose territory is subject to requirements of § 213.110	110.17	Failure to provide functional PTLF to § 213.7 individual whose territory is subject to requirements of§ 213.110.

New FRA Code		Previous Code	
0110M6	Failure to restore contact between rail and lateral rail restraint components	110.18	Failure to restore contact between rail and lateral rail restraint components
0110N	Failure to keep GRMS records as required	110.19	Failure to keep GRMS records as required.
0110O	Failure to conduct GRMS inspections at required frequency	110.20	Failure to conduct GRMS inspections at required frequency.
		110.12	**Failure to make available GRMS training program.**
		110.14	**Failure to provide GRMS training to§ 213.7 individual whose territory is subject to requirements of § 213.110.**
213.113	**Defective Rails**	**213.113**	**Defective rails**
0113A	Operation continued over defective rail without required remedial action.		N/A
0113B	Rail defect originating from bond wire attachment [where a defect results from a bond wire attachment, FRA inspectors must cite this defect code and also include a description of the applicable rail defect as described in §213.113]	113.16	Rail defect originating from bond wire attachment [Where a defect results from a bond wire attachment, FRA inspectors must cite this defect code and also include a description of the applicable rail defect as described in *213.113l
0113B1	Transverse fissure	113.01	Transverse Fissure
0113B10	Ordinary break	113.12	Ordinary Break
0113B11	Damaged rail	113.14	Damaged Rail
0113B12	Flattened rail	113.15	Flattened Rail
0113B13	Bolt-hole crack	113.07	Bolt-Hole Crack
0113B14	Broken or defective weld	113.13	Broken or Defective Weld
0113B15	Head web separation	113.08	Head Web Separation
0113B2	Compound fissure	113.02	Compound Fissure
0113B3	Horizontal split head	113.03	Horizontal Split Head
0113B4	Vertical split head	113.04	Vertical Split Head
0113B5	Split web	113.05	Split Web
0113B6	Piped rail	113.06	Piped Rail
0113B7	Broken base	113.09	Broken Base
0113B8	Detail fracture	113.1	Detail Fracture
0113B9	Engine burn fracture	113.11	Engine Burn Fracture
213.115	**Rail end Mismatch**	**213.115**	**Rail end mismatch**
0115A1	Rail-end mismatch on tread of rail exceeds allowable.	115.01	Rail-end mismatch on tread of rail exceeds allowable.
0115A2	Rail-end mismatch on tread of rail exceeds allowable (CWR).	115.03	Rail-end mismatch on tread of rail exceeds allowable (CWR)
0115A3	Rail-end mismatch on gage side of rail exceeds allowable.	115.02	Rail-end mismatch on gage side of rail exceeds allowable.
0115A4	Rail-end mismatch on gage side of rail exceeds allowable (CWR).	115.04	Rail-end mismatch on gage side of rail exceeds allowable (CWR)
213.118	**Continuous welded rail (CWR); Plan approval and review**		
0118A1	Failure of track owner to develop and implement written CWR procedures.		N/A
0118A2	Failure to comply with written CWR procedures.		N/A
0118A3	Failure of track owner to develop a training program for the implementation of their written CWR procedures.		N/A
0118C	Failure of track owner to comply with existing CWR plan.		N/A
0118E1	Failure of track owner to file a revised CWR plan with associate administrator of safety/chief operating officer within 30 days of revision.		N/A

APPENDIX

New FRA Code		Previous Code	
0118E2	Failure of track owner to re-submit a conforming plan within 30 days of receipt of final submission decision.		N/A
213.119	**Continuous welded rail (CWR); general**	**213.119**	**Continuous welded rail (CWR); general**
0119A	Failure to comply with written CWR procedures - installation and adjustment	119.02	Failure to comply with written CWR procedures.
0119B	Failure to comply with written CWR procedures - anchoring or fastening requirements	119.10	Failure to comply with written CWR procedures anchoring requirements
0119C	Failure to comply with written CWR procedures - joint installation and maintenance procedures	119.06	Failure to record the location of, conditions of, and remedial action for joints in CWR, as required.
0119D	Failure to comply with written CWR procedures - maintaining desired rail installation temperature range	119.11	Failure to comply with written CWR procedures rail neutral temperature
0119E	Failure to comply with written CWR procedures - curved track	119.12	Failure to comply with written CWR procedures monitoring procedures
0119F	Failure to comply with written CWR procedures - train speed	119.13	Failure to comply with written CWR procedures train speed
0119G	Failure to comply with written CWR procedures - physical track inspections	119.14	Failure to comply with written CWR procedures inspection procedures
0119H	Failure to comply with written CWR procedures - CWR joint inspection	119.07	Failure to inspect joints in CWR at required frequency.
0119I	Failure to comply with written CWR procedures - training	119.03	Failure of track owner to develop a training program for the implementation of their written CWR procedures.
0119J	Failure to comply with written CWR procedures - recordkeeping	119.04	Failure to keep CWR records as required.
0119K	CWR procedures and revisions not available at job site or maintained in one manual		N/A
		119.01	**Failure of track owner to develop and implement written CWR procedures.**
		119.05	**Failure of track owner to institute required provisions for inspecting joints in CWR.**
		119.08	**Railroad using alternate methods to inspect joints in CWR without seeking approval from FRA.**
		119.09	**Railroad using alternate methods to inspect joints in CWR before approval has been granted**
213.121	**Rail joints**	**213.121**	**Rail joints**
0121A1	Rail joint not of structurally sound design and dimension (jointed track)	121.01	Rail joint not of structurally sound design and dimension (Jointed rail)
0121A2	Rail joint not of structurally sound design and dimension (CWR).	121.11	Rail joint not of structurally sound design and dimension (CWR).
0121B1	Cracked or broken joint bar in Classes 3 through 5 track (other than center-break) (jointed track)	121.02	Cracked or broken joint bar in Classes 3 through 5 track (other than center-break) (Jointed rail)
0121B2	Cracked or broken joint bar in Classes 3 through 5 track (other than centerbreak) (CWR)	121.12	Cracked or broken joint bar in Classes 3 through 5 track (other than centerbreak) (CWR).
0121B3	Cracked or broken insulated joint bar in Classes 3 through 5 track (other than centerbreak) (CWR).	121.17	Cracked or broken insulated joint bar in Classes 3 through 5 track (other than centerbreak) (CWR)
0121B4	Worn joint bar allows excessive vertical movement of rail in joint in Classes 3 through 5 track (jointed track)	121.04	Worn joint bar allows excessive vertical movement of rail in joint in Classes 3 through 5 track (jointed rail)
0121B5	Worn joint bar allows excessive vertical movement of rail in joint in Classes 3 through 5 track (CWR).	121.14	Worn joint bar allows excessive vertical movement of rail in joint in Classes 3 through 5 track (CWR)

New FRA Code		Previous Code	
0121C1	Center cracked or broken joint bar (jointed track)	121.03	Center cracked or broken joint bar (Jointed rail)
0121C2	Center cracked or broken joint bar (CWR).	121.13	Center cracked or broken joint bar (CWR).
0121C3	Center cracked or broken insulated joint bar (CWR)	121.15	Center cracked or broken insulated joint bar (CWR)
0121D1	Less than 2 bolts per rail at each joint for conventional jointed rail in Classes 2 through 5 track.	121.05	Less than 2 bolts per rail at each joint for conventional jointed rail in Classes 2 through 5 track.
0121D2	Less than 1 bolt per rail at each joint for conventional jointed rail in Class 1 track.	121.06	Less than I bolt per rail at each joint for convention-al jointed rail in Class 1 track.
0121E	Less than 2 bolts per rail at any joint in continuous welded rail.	121.07	Less than two bolts per rail at any joint in continuous welded rail.
0121F1	Loose joint bars (jointed track)	121.08	Loose joint bars (jointed rail)
0121F2	Loose joint bars (CWR).	121.18	Loose joint bars (CWR).
0121G1	Torch-cut or burned-bolt hole in rail in Classes 2 through 5 track (jointed track)	121.09	Torch-cut or burned-bolt hole in rail in Classes 2 through 5 track (jointed rail)
0121G2	Torch-cut or burned-bolt hole in rail in Classes 2 through 5 track (CWR).	121.19	Torch-cut or burned-bolt hole in rail in Classes 2 through 5 track (CWR).
0121H1	Joint bar reconfigured by torch cutting in Classes 3 through 5 track (jointed track)	121.10	Joint bar reconfigured by torch cutting in Classes 3 through 5 track (jointed rail)
0121H2	Joint bar reconfigured by torch cutting in Classes 3 through 5 track (CWR).	121.20	Joint bar reconfigured by torch cutting in Classes 3 through 5 track (CWR).
		121.16	**Reserved**
213.122	**Torch Cut Rail**	**213.122**	**Torch cut rail**
0122Ai	Torch cut rail applied in Class 3 through 5 track for other than emergency.	122.01	Torch cut rail applied in Class 3 through 5 track for other than emergency.
0122Aii	Failure to remove torch cut rails within specified time frame.	122.02	Failure to remove torch cut rails within specified time frame.
0122B1	Failure to remove non-inventoried torch cut rail within 30 days of discovery.	122.03	Failure to remove non-inventoried torch cut rail with-in 30 days of discovery.
0122B2	Train speed exceeds allowable over non-inventoried torch cut rail.	122.04	Train speed exceeds allowable over non-inventoried torch cut rail.
213.123	**Tie Plates**	**213.123**	**Tie Plates**
0123A	Insufficient tie plates in Class 3 through 5 track.	123.01	Insufficient tie plates in Class 3 through 5 track.
0123B	Object between base of rail and the bearing surface of the tie plate causing concentrated load.	123.02	Object between base of rail and the bearing surface of the tie plate causing concentrated load.
213.127	**Rail Fastenings**	**213.127**	**Rail Fastenings**
0127A	Failure of fastening components to effectively maintain gage within the limits described in § 213.53(b)	127.02	Fasteners in a 39-foot track segment not effectively maintaining gage
0127A2	Insufficient fasteners in a track segment.	127.01	Insufficient fasteners in a 39-foot track segment.
0127A3	Insufficient fasteners at rail joint.		N/A
0127B	Failure of applied rail anchors to provide effective longitudinal restraint		N/A
0127C	Failure of fastener placement at insulated joints from performing as intended, or the crosstie does not effectively support the rail		N/A
213.133	**Turnouts and Track Crossing Generally**	**213.133**	**Turnouts and Track Crossing Generally**
0133A1	Loose, worn, or missing switch clips.	133.01	Loose, worn, or missing switch clips.
0133A10	Missing switch, frog, or guard rail plates.	133.10	Missing switch, frog, or guard rail plates.
0133A11	Loose or missing switch point stops.	133.11	Loose or missing switch point stops.
0133A12	Loose, worn, or missing frog bolts.	133.12	Loose, worn, or missing frog bolts.

New FRA Code		Previous Code	
0133A13	Loose, worn, or missing guard rail bolts.	133.13	Loose, worn, or missing guard rail bolts.
0133A14	Loose, worn or missing guard rail clamps, wedge, separator block, end block, or other components.	133.14	Loose, worn or missing guard rail clamps, wedge, separator block, end block, or other components.
0133A15	Turnout or track crossing fastenings not intact or maintained.	133.20	Turnout or track crossing fastenings not intact or maintained.
0133A16	Obstruction between switch point and stock rail.	133.15	Obstruction between switch point and stock rail.
0133A17	Obstruction in flangeway of frog.	133.16	Obstruction in flangeway of frog.
0133A18	Obstruction in flangeway of guard rail.	133.17	Obstruction in flangeway of guard rail.
0133A2	Loose, worn, or missing clip bolts (transit, side jaw, eccentric, vertical).	133.02	Loose, worn, or missing clip bolts (transit, side jaw, eccentric, vertical).
0133A3	Loose, worn, or defective connecting rod.	133.03	Loose, worn, or defective connecting rod.
0133A4	Loose, worn, or defective connecting rod fastening.	133.04	Loose, worn, or defective connecting rod fastening.
0133A5	Loose, worn, or defective switch rod.	133.05	Loose, worn, or defective switch rod.
0133A6	Loose, worn, or missing switch rod bolts.	133.06	Loose, worn, or missing switch rod bolts.
0133A7	Worn or missing cotter pins.	133.07	Worn or missing cotter pins.
0133A8	Loose or missing rigid rail braces.	133.08	Loose or missing rigid rail braces.
0133A9	Loose or missing adjustable rail braces.	133.09	Loose or missing adjustable rail braces.
0133B	Insufficient anchorage to restrain rail movement.	133.18	Insufficient anchorage to restrain rail movement.
0133C	Flangeway less than 1 1/2 inches wide.	133.19	Flangeway less than 1" inches wide.
213.135	**Switches**	**213.135**	**Switches**
0135A1	Stock rail not securely seated in switch plates.	135.01	Stock rail not securely seated in switch plates.
0135A2	Stock rail canted by overtightening rail braces.	135.02	Stock rail canted by overtightening rail braces.
0135B1	Improper fit between switch point and stock rail.	135.03	Improper fit between switch point and stock rail.
0135B2	Excessive lateral or vertical movement of switch point.	135.05	Excessive lateral or vertical movement of switch point.
0135B3	Lateral or vertical movement of a stock rail adversely affecting the fit of the switch point to the stock rail.		N/A
0135C	Outer edge of wheel contacting gage side of stock rail.	135.04	Outer edge of wheel contacting gage side of stockrail.
0135D	Heel of switch insecure.	135.06	Heel of switch insecure.
0135E1	Switch stand or switch machine insecure or operable with excessive lost motion.	135.07	Insecure switch stand or switch machine.
0135E2	Connecting rod insecure or operable with excessive lost motion.	135.08	Insecure connecting rod.
0135F	Throw lever operable with switch lock or keeper in place.	135.09	Throw lever operable with switch lock or keeper in place.
0135G	Switch position indicator not clearly visible.	135.10	Switch position indicator not clearly visible.
0135H1	Unusually chipped or worn switch point.	135.11	Unusually chipped or worn switch point.
0135H2	Improper switch closure due to metal flow.	135.12	Improper switch closure due to metal flow.
0135I	Use of tongue and plain mate where speeds exceed Class one.	135.13	Use of tongue and plane mate where speeds exceed class one
213.137	**Frogs**	**213.137**	**Frogs**
0137A	Insufficient flangeway depth.	137.01	Insufficient flangeway depth.
0137B	Frog point chipped, broken, or worn in excess of allowable.	137.02	Frog point chipped, broken, or worn in excess of allowable.
0137C	Tread portion of frog worn in excess of allowable.	137.03	Tread portion of frog worn in excess of allowable.

New FRA Code		Previous Code	
0137D	Use of flange bearing frog where speed exceeds that permitted by Class 1.	137.04	Use of flange bearing frog where speed exceeds that permitted by Class 1.
0137E	Severe frog condition not otherwise provided. (advisory only cannot be used solely to recommend violation)	137.99	Severe frog condition not otherwise provided.]Advisory only cannot be used solely to recommend violation]
213.139	**Spring Rail Frogs**	**213.139**	**Spring Rail Frogs**
0139A	Outer edge of wheel contacting side of spring wing rail.	139.01	Outer edge of wheel contacting side of spring wing rail.
0139B	Toe of wing rail not fully bolted and tight.	139.02	Toe of wing rail not fully bolted and tight.
0139B1	Ties under or wing rail not solidly tamped.	139.03	Ties under or wing rail not solidly tamped.
0139C1	Bolt-hole defect in spring frog.	139.04	Bolt-hole defect in frog.
0139C2	Head and web separation in spring frog.	139.05	Head and web separation in frog.
0139D	Insufficient **compression** in spring to hold wing rail against point rail.	139.06	Insufficient **tension** in spring to hold wing rail against point rail
0139E	Excessive clearance between hold-down housing and horn.	139.07	Excessive clearance between hold-down housing and horn
213.141	**Self-Guarded Frogs**	**213.141**	**Self-Guarded Frogs**
0141A	Raised guard worn excessively.	141.01	Raised guard worn excessively.
0141B	Frog point rebuilt before restoring guarding face.	141.02	Frog point rebuilt before restoring guarding face.
213.143	**Frog Guard Rails and Guard Faces; Gage**	**213.143**	**Frog Guard Rails and Guard Faces; Gage**
0143A1	Guard check gage less than allowable.	143.01	Guard check gage Jess than allowable.
0143A2	Guard face gage exceeds allowable.	143.02	Guard face gage exceeds allowable.
0143A3	Cracked or broken guard rail.	143.03	Cracked or broken guard rail.
213.205	**Derails**	**213.205**	**Derails**
0205A	Derail not clearly visible.	205.01	Derail not clearly visible.
0205B	Derail operable when locked.	205.02	Derail operable when locked.
0205C1	Loose, worn, or defective parts of derail.	205.03	Reserved
0205C2	Insecure derail or stand	205.04	Improper size derail.
0205D1	Improper size derail.	205.05	Improperly installed derail.
0205D2	Improperly installed derail.	205.06	Loose, worn, or defective parts of derail.
213.233	**Track inspections**	**213.233**	**Track inspections**
0233A	Track inspected by other than qualified designated individual.	233.01	Track inspected by other than qualified designated individual
0233B	Track being inspected at excessive speed.	233.02	Track being inspected at excessive speed.
0233B1	One inspector inspecting more than two tracks or inspecting tracks with centers greater than allowable.	233.05	One Inspector inspecting more than two tracks.
0233B2	Two inspectors inspecting more than four tracks or inspecting tracks with centers greater than allowable.	233.06	Two Inspectors inspecting more than four tracks.
0233B3i	Main track not traversed within the required frequency.	233.08	Main track not traversed within the required frequency.
0233B3ii	Siding track not traversed within the required frequency.	233.09	Siding track not traversed within the required frequency.
0233C	Failure to inspect at required frequency.	233.03	Failure to inspect at required frequency.
0233D	Failure to initiate remedial action for deviations found.	233.04	Failure to initiate remedial action for deviations found.
		233.07	**Inspection performed on track outside of maximum allowable track center distances.**
213.234	**Automated inspection of track constructed with concretwe ties**		**N/A**

APPENDIX

New FRA Code		Previous Code	
0234B1	Failure to inspect at required frequency on Class 4 and 5 main track and Class 3 main track with regularly scheduled passenger service, exceeding 40 million gross tons annually, at least twice each calendar year, with no less than 160 days between inspections		N/A
0234B2	Failure to inspect at required frequency on Class 4 and 5 main track and Class 3 main track with regularly scheduled passenger service equal to or less than 40 million gross tons annually, at least once per calendar year.		N/A
0234B3	Failure to inspect at required frequency on Class 3, 4, and 5 main track with exclusively passenger service, either an automated inspection or walking inspection once per calendar year.		N/A
0234B4	Failure to inspect at required frequency in accordance with paragraph (b)(1) or (b)(2) of this section because of train operation interruption.		N/A
0234C	Sections of tangent track greater than 600 feet constructed of concrete crossties, not inspected		N/A
0234D1	Automated inspection measurement system incapable of measuring and processing rail seat deterioration.		N/A
0234E	Failure of automated inspection measurement system to produce an exception report.		N/A
0234F	Failure to maintain and make available to FRA a record of the inspection data and exception record for the track inspected.		N/A
0234G	Failure to maintain proper procedures for data integrity.		N/A
0234H	Failure to provide annual rail seat deterioration training.		N/A
213.235	**Inspection of switches, track crossings, and lift rail assemblies or other transition devices on moveable bridges**	**213.235**	**Inspection of switches, track crossings, and lift rail assemblies or other transition devices on moveable bridges**
0235A1	Failure to inspect turnouts at required frequency.	235.01	Failure to inspect turnouts at required frequency.
0235A2	Failure to inspect track crossings at required frequency.	235.02	Failure to inspect track crossings at required frequency.
0235A3	Failure to inspect lift rail assemblies or other transition devices on moveable bridges at required frequency.	235.03	Failure to inspect lift rail assemblies or other transition devices on moveable bridges at required frequency
0235B	Failure to operate specified switches in Classes 3 through 5.	235.04	Failure to operate specified switches in Classes 3 through 5.
0235C	Switch, turnout, track crossing or transition device used less than once a month and not inspected on foot before use		N/A
0235C1	Track used less than once a month not inspected on foot before use		N/A
213.237	**Inspection of Rail**	**213.237**	**Inspection of Rail**
0237A	Failure to inspect rail for internal defects at required frequency.	237.01	Failure to inspect rail for internal defects at required frequency.

New FRA Code		Previous Code	
0237B	Failure of equipment to inspect rail at joints.	237.02	Failure of equipment to inspect rail at joints.
0237C	Defective rail not marked properly.	237.03	Defective rail not marked properly.
0237E	Improper action taken after expiration limits of previous internal rail defect search.	237.04	Failure to reduce operating speed until valid rail inspection is performed.
213.239	**Special Inspections**	**213.239**	**Special Inspections**
0239A	Failure to conduct special inspections when required.	239.01	Failure to conduct special inspections when required.
213.241	**Inspection Recoeds**	**213.241**	**Inspection records**
0241A	Failure to keep records as required.	241.01	Failure to keep records as required.
0241B1	Failure of inspector to complete report the day of the inspection.	241.02	Failure of Inspector to complete report at time of inspection.
0241B2	Failure of inspector to sign report.	241.03	Failure of inspector to sign report.
0241B3	Failure to indicate the nature of deviation.		N/A
0241B4	Failure of inspector to provide required information.	241.04	Failure of Inspector to provide required information.
0241B5	Failure to record required periodic or follow-up CWR joint inspection	241.15	Failure to record required CWR joint inspection
0241C	Failure of rail inspection record to provide required information.	241.05	Failure of rail inspection record to provide required information.
0241D	Failure to make records available for copying and inspection.	241.06	Failure to make records available for copying and inspection.
0241E1	Electronic system does not maintain the integrity of each record.	241.07	Electronic system does not maintain the integrity of each record.
0241E2	Electronic storage not initiated within 24 hours.	241.14	Electronic storage not initiated within 24 hours.
0241E3	Electronic system allows record or amendments to be modified.	241.08	Electronic system allows record or amendments to be modified.
0241E4	Electronic amendments not stored separately from record.	241.09	Electronic amendments not stored separately from record.
0241E4i	Person making electronic amendment not identified.	241.10	Person making electronic amendment not identified.
0241E5	Electronic system corrupts or losses data.	241.11	Electronic system corrupts or losses data.
0241E6	Paper copies of records not made available for inspection and copying.	241.12	Paper copies of records not made available for inspection and copying.
0241E7	Inspection reports not available to inspector or subsequent inspectors	241.13	Inspection reports not available to Inspector or sub-sequent Inspectors.

NOTES

Index

A

abrasion
repairing concrete ties, 3-16

B

ballast
car release, 1-12
determining the correct size, 1-10
distribution, 1-10
fouled, 1-10, 1-13
maintenance, 1-13
program maintenance, 1-13
purposes, 1-9
quantities, 1-12
spot maintenance, 1-13
stock piling, 1-12
tie cribs, 1-4, 1-13
unloading, 1-10

berms
construction and maintenance, 1-5

borrow pit
requirements, 1-8

bridges
identification, 6-8
maintenance, 6-8

C

clearances
crossover switches, 2-10
horizontal and vertical minimums, 2-11
superelevation in adjacent tracks, 2-11
track center measuring, 2-9
track center minimum lengths, 2-9, 2-10

coach screws
requirements, 3-37

compromise joint bars
requirements, 4-18

concrete ties
coring out shoulders, 3-20
rail seat abrasion, 3-16
shoulders, 3-32
types and applications, 3-3

crossbucks
requirements, 6-5

crosslevel
measuring, 2-13

crossovers
designated line rail, 2-3
maintaining grade, 2-12
switch tie installation, 3-7
track alignment, 2-3

culverts
maintenance, 6-8
requirements, 1-3

curve blocks
when to use, 3-34

curved track
designated line rail, 2-2

curves
marker identification, 2-21
placing and maintaining markers, 2-21
staking requirements, 2-12, 7-26
superelevation curve speeds, 2-18
vertical grades, 2-12

CWR
de-stressing, 7-25
laying requirements, 4-13
rail laying temperature, 7-31
reference marks, 7-21

D

derailment
relay requirements, 4-11

derails
guidelines, 5-38

ditches
Call Before You Dig hotline, 1-2
construction and maintenance, 1-2, 1-3
when to cut for snow, 1-3

drainage
correct grade, 1-2
culverts, 1-3
engineering fabric installation,1-7
general considerations, 1-2
grade crossings, 1-3
multiple grade crossings, 1-4
perforated pipe installation, 1-6
requirements, 1-2
rock drains, 1-7
subsurface devices, 1-5

E

embankment
how to stabilize, 1-8
settling or failure, 1-8

engineering fabric
installing, 1-7

erosion
control materials, 1-5
controlling, 1-5

F

fencing
right of way requirements, 6-7

fiber optic cables
Call Before You Dig hotline, 1-2
requirements, 6-10

fire protection
fire danger classifications 6-4
in-track welders 6-4
open flame heaters 6-4
rail grinders 6-4
reporting 6-4
welding, grinding and cutting 6-4

frogs
bolt installation, 5-22
bolt sizes and torque, 5-22
gage plates, 5-23
grinding and slotting, 5-26
guard check gauges, 5-23
guard rail size and length, 5-22
identifying, 5-16
types, 5-16
wear checking, 5-20, 5-21

G

gage
designated gage rail, 2-6
gage rod installation, 2-8
maintaining standard, 2-9
maintenance limits, 2-8
measuring, 2-7
restoring standard gage, 2-8
standard measurement, 2-7

gage rod
installing, 2-8

geometry standards
taking measurements, 2-2, 2-7, 2-15

grade
designated rail, 2-12
multiple track crossings, 2-12
stakes, 2-12
turnouts and crossovers, 2-12
vertical curves, 2-13

grade crossings
drainage, 1-3, 1-4

INDEX

protection 6-5, 6-6
removal from service, 1-4
grinding
fire protection 6-4
preparation, 4-61
types, 4-61
when to grind, 4-61
guard rails
frog sizes, 5-21
guidelines, 5-37

H

hazardous material
handling waste and spills, 6-9
head block ties
installing, 3-8
heaving
correcting with rock drains, 1-7
heel blocks
requirements, 5-13
high water levels
requirements, 1-5
hook-in shoulders
using, 3-33

I

insulated joint fastenings
when to use, 3-31
insulated joints
fiberglass, 4-27
poly-coated, 4-27
types and applications, 4-26
insulators
requirements, 3-19

J

joint bars
compromise joint bars, 4-18
installation, 4-18
joint spikes
requirements, 3-35

L

levees
construction and maintenance, 1-5
line rail
curved track, 2-2
tangent track, 2-2
turnouts and crossovers, 2-3
lubricators
hy-rail units, 4-59
inspecting and maintaining, 4-59
installing, 4-59
locations for application, 4-59, 5-37
methods, 4-59
requirements, 4-59
suspension during maintenance, 4-60
wayside placement, 4-59

M

multiple track grade crossings
drainage, 1-4

P

perforated pipe
installing, 1-6
pilot holes
drilling in ties, 3-9
profile
measuring, 2-14
property damage
reporting, 6-3
pull-aparts
passing trains over, 4-57
repair of, 4-23, 4-58

R

rail
alloy determination, 4-5
bolted, 4-17
branding, 4-4
cutting, 4-27
defects, 4-37
bolt hole break, 4-37
broken base, 4-37
defective weld, 4-39
engine burn fracture, 4-40
head web separation, 4-40
horizontal split head, 4-40
piped rail, 4-41
remedial action, 4-46
signal bond defects 4-42
split web, 4-41
transverse defects, 4-41
vertical split head, 4-42
de-stressing CWR, 7-25
heating, 4-14
identification, 4-4
installation CWR, 4-13
temperature, 7-8
passing over broken or pull-aparts, 4-57
placement, 4-11
relay guidelines, 4-6
section information, 4-6
stamping, 4-4
temporary repairs, 4-58
wear limits, 4-6
rail anchors
applications, 4-32
bridge pattern, 4-35
installation, 4-34
maintenance, 4-37
solid box pattern, 4-35
standard box pattern, 4-34
types, 4-33
rail joints
drilling, 4-23
gaps, 4-25
inspection, 4-21, 8-11
mismatches, 4-25
non-defective tie placement, 3-10
permanent, 4-21
pull-aparts, 4-23
staggering, 4-22
support, 4-22
rail relays
speed restrictions, 7-17
reference marks
when to use, 7-21
right of way
bridges and culverts, 6-8
environmental requirements, 6-9
fencing, 6-7
fire protection, 6-4
housekeeping, 6-3
material loading and unloading, 6-2
property damage, 6-3
roadway maintenance, 6-6
roadway signs, 6-4
special inspections, 8-22
vegetation control, 6-3
roadway signs
clearance warnings, 6-6
standard highway crossing, 6-5
whistle signs, 6-5
rock drains
constructing, 1-7

INDEX

S

shims
installing, 2-23
track alignment use, 2-4
side slope
maintaining with ballast, 1-9
special inspections
earthquakes, 8-22
fires, 8-22
floods, washouts, mud/rock slides, 8-21
requirements, 8- 21
violent storms, 8-21
speed restrictions
new panel turnouts, 7-14
new track, 7-14
ordinary maintenance, 7-17
rail relays, 7-17
requirements for track work, 7-12
responsibility for, 7-13
slow order reason codes, 7-19
stabilized track, 7-17
tie and surfacing operations, 7-15
undercut, sledded, or plowed track, 7-14
spikes
patterns, 3-35
requirements, 3-35
turnout requirements, 3-36
spirals
measuring, 2-17
spring clips
installation, 3-24
reusing, 3-24
steel ties
installing new, 2-23, 3-3
types and applications, 3-3
stock rails
replacing, 5-14
requirements, 5-14
superelevation
adjacent track maximums, 2-11
curve speeds, 2-18, 2-19, 2-20
installing and maintaining, 2-18
measuring, 2-12
surface
maintenance limits, 2-15
measuring crosslevel, 2-12
profile, 2-14
spirals, 2-17
superelevations, 2-18
warp, 2-13
steel tie installation, 2-22, 3-3
switch machine ties
installing, 3-7
switch points
fit, 8-17
heel blocks, 5-13, 8-17
plating in turnouts, 5-15, 8-17
throw, 8-16
wear, 8-17
switch rods
connecting, 5-9
switch ties
crossovers, 3-7
protection at new turnouts, 3-7
types and applications, 3-6
switches
adjustments for stands, 5-6
clamps, 5-8
locks, 5-7
point guards, 5-8
rollers, 5-8
stands, 5-5
targets, 5-5
types, 5-5

T

tangent track
designated line rail, 2-2
tie and surfacing operations
speed restrictions, 7-15
tie cribs
maintaining with ballast, 1-9
tie pads
installation, 3-18
selection, 3-18
tie plates
applications, 3-33
requirements, 3-33
with curve blocks, 3-34
ties
concrete, 3-3
composite, 3-4
defective, 3-10, 3-12
head block, 3-7
installing and spacing, 3-4
maintenance, 3-11
non-defective distribution, 3-10
pilot hole drilling, 3-9
steel, 3-3
switch machine, 3-7
switch ties, 3-6
transition zones, 3-8
types and applications, 3-3
wood, 3-3
track alignment
behind the frog, 2-6
designating line rails, 2-2, 2-3
maintenance limits, 2-4
measuring, 2-3
restoring uniform alignment, 2-5
staking curves, 7-27
turnouts and crossovers, 2-3
using shims, 2-15, 2-23
track bolts
installation, 4-17
sizes, 4-17
track center
crossover switch requirements, 2-10
measuring, 2-9
minimum length, 2-9
track inspection
Director Track Maintenance, 8-4
inspection records, 8-25
Manager Track Maintenance, 8-5
notification, 8-20, 8-21
requirements, 8-4, 8-7
special inspections, 8-20
track inspector, 8-6 to 8-10
track work
new track protection, 7-8
speed restrictions, 7-18
turnouts
coach screw requirements, 3-37
constructing, 5-4
designated line rails, 2-3
identifying, 5-3
inspection, 8-16
maintaining grade, 2-12
maintenance, 5-35
replacing components, 5-38
speeds, 5-4
spiking, 3-36
switch tie installation, 3-6
switch tie protection, 7-15, 7-16
switch ties at new locations, 3-7
track alignment, 2-2
types, 5-4

INDEX

W

warp
measuring, 2-13
weld-on shoulders
applications, 3-32
installation, 3-32
replacing, 3-32
welding, 3-32
welds
defective, 4-39
field welding, 4-28
guard rails, 5-26
reinforcing straps, 4-30
switch points, 5-12
wood ties
types and applications, 3-3

INDEX

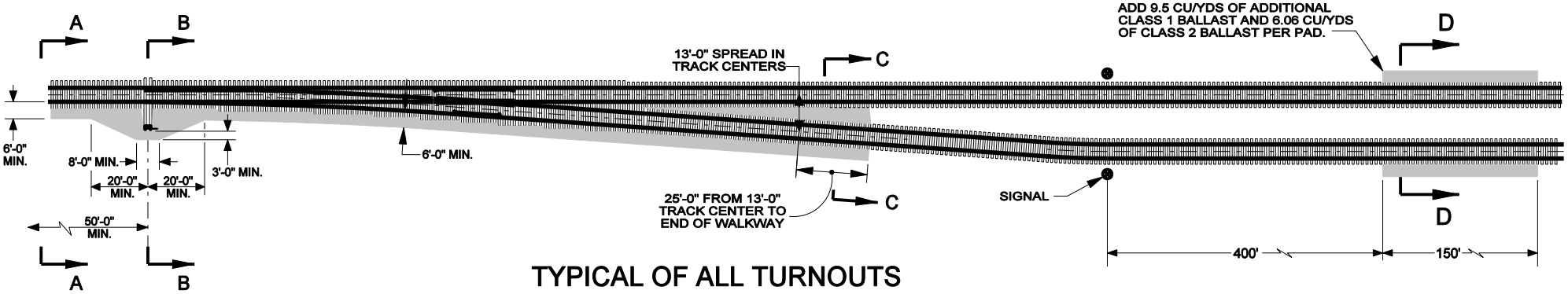

TYPICAL OF ALL TURNOUTS

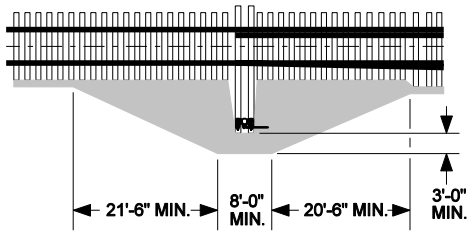

DERAIL DETAIL

REQUIRES 8 CU/YDS OF ADDITIONAL BALLAST

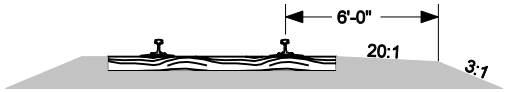

VIEW A-A

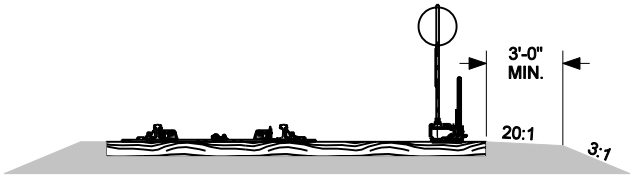

SECTION B-B

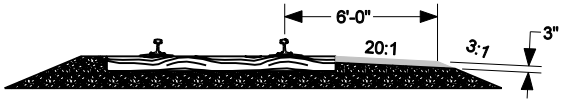

ALTERNATE SECTION FOR FREQUENTLY USED MAINLINE TURNOUTS

SECTION C-C

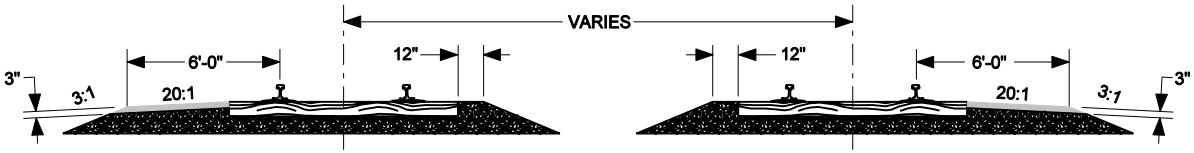

SECTION D-D

ADDITIONAL BALLAST REQUIRED FOR WALKWAY CONSTRUCTION

BALLAST TYPE	NORMAL APPLICATION	FREQUENTLY USED	MAINLINE HAND THROW
TURNOUT NO.	CLASS 1 OR 2	CLASS 1	CLASS 2
9	27.2 CU/YDS	16.9 CU/YDS	10.3 CU/YDS
10	28.5 CU/YDS	17.7 CU/YDS	10.8 CU/YDS
14	36.1 CU/YDS	22.4 CU/YDS	13.7 CU/YDS
*20	45.9 CU/YDS	28.5 CU/YDS	17.4 CU/YDS
*30	65.7 CU/YDS	40.8 CU/YDS	24.9 CU/YDS

*DOES NOT INCLUDE WALKWAY FOR MOVEABLE POINT FROG SWITCH MACHINE

LEGEND:

CLASS 2 BALLAST

CLASS 1 BALLAST

NOTES:
WALKWAYS SHALL BE CONSTRUCTED WITH THE SAME TYPE OF BALLAST USED IN THE TURNOUT EXCEPT THAT FREQUENTLY USED HAND THROW MAINLINE TURNOUTS SHALL BE CONSTRUCTED WITH CLASS 2 BALLAST.

RENEWED TURNOUTS ARE THOSE WHICH ARE NEWLY INSTALLED, REPLACED. UNDERCUT. OR HAVE 50% OF THE TURNOUT TIES REPLACED.

BOARDING PADS FOR MEETING POINTS SHALL BE CONSTRUCTED WITH CLASS 2 BALLAST.

VARIOUS STATE WALKWAY REGULATIONS WILL SUPERCEDE THIS DRAWING AND MUST BE COMPLIED WITH.

UNION PACIFIC RAILROAD
RECOMMENDED PRACTICES

BALLAST SECTION FOR RENEWED TURNOUTS AND DERAILS

DATE: MAY 17, 2000
FILE NO.: TOBALLAST.DGN