Texas Department of Transportation

PUBLIC HEARING SUMMARY REPORT

US 59

FROM SPUR 10 TO SH 99

FORT BEND COUNTY

CSJ Nos: 0027-12-097, 0027-12-105, 0027-12-106, and 0027-12-114

Public Hearing
May 16, 2024

5:30pm to 7:00pm

B.F. Terry High School
5500 Avenue N
Rosenberg, TX 77471

Presented by

TEXAS DEPARTMENT OF TRANSPORTATION

Table of Contents

Public Hearing Date 1
Public Hearing Location 1
Public Hearing Purpose 1
Public Hearing Format 1
Attendance 1
Publications and Notifications 1
Public Hearing Summary 2
Public Comments and Response 2

List of Appendices

Appendix A: Affidavits of Publication
Appendix B: Public Notice Mailing Lists and Notifications
Appendix C: Exhibits and Handouts from Hearing
Appendix D: Sign-in Sheets
Appendix E: Comment Letters, E-mails, Forms, and Speaker Cards
Appendix F: Public Meeting Photographs
Appendix G: Public Hearing Transcript

US 59 (from Spur 10 to SH 99)
Public Hearing Summary

Public Hearing Date

May 16, 2013

Public Hearing Location

Terry High School
5500 Ave N
Rosenberg, Texas 77471

Public Hearing Purpose

To inform the public and stakeholders of the proposed roadway improvements and to obtain their comments and concerns.

Public Hearing Format

5:30pm to 6:30pm: Open house format for public viewing and comment. Exhibits included an environmental constraints map detailing existing environmental conditions, preliminary design schematic with typical sections for the proposed alternative, exhibit boards, and two copies of the Environmental Assessment for public review.

6:30pm to 7:00pm: Formal slideshow presentation by James Koch and Manny Francisco of TxDOT Houston District and Amy Brook of Berg-Oliver Associates, Inc. Tamara Vinson of Vinson Reporting & Video Service transcribed the hearing. Three public comments were received orally by microphone. The hearing was then adjourned.

Attendance

Citizens:	65	
Elected Officials:	2	Mayor, City of Rosenberg – Vincent Morales
		Fort Bend County Commissioner, Precinct 1 – Richard Morrison
Media	1	*Fort Bend Business Journal* – Sharon Wallingford

Publications and Notifications

Notice of this public hearing was advertised in the (**Appendix A**):

Houston Chronicle – Tuesday, April 16, 2013 and Monday, May 6, 2013

Fort Bend Herald – Tuesday, April 16, 2013 and Monday, May 6, 2013

*Las Noticias de Fort Bend** – Wednesday, April 17, 2013 and Wednesday, May 8, 2013

* This publication is actually distributed late Tuesdays and is dated on Wednesdays.

The public notice and a map identifying the public hearing location were mailed to elected officials on April 12, 2013 and to adjacent property owners on April 13, 2013. This information was also distributed in English and Spanish by the homeowners associations of RiverPark West, Canyon Gate at the Brazos, Canyon Lake at the Brazos, Cottonwood, and Lakes of Williams Ranch (see **Appendix B**).

Public Hearing Summary

The purpose of the public hearing was to solicit public comments and input, as well as to allow the opportunity for public dialogue and exchange with TxDOT regarding the proposed roadway improvements.

Public Comments and Response

Three citizens - Cynthia Barratt, Richard Fields, and Bill Tobin - spoke during the comment period at the Public Hearing. The transcript of these comments is included in **Appendix G**.

A total of 79 comments on the project were received: two (2) letters, four (4) e-mails, and seventy-three (73) comment forms. Most of the public comments received during the hearing were favorable regarding the public hearing process and information dissemination process and format. In addition, most citizens agreed that something needs to be done about congestion in this corridor.

Objections were primarily expressed by the employees of Ocusoft, located at the northeast corner of US 59 and Kroesche Road. Sixty-eight (68) comment forms were submitted by employees of the company (as expressly indicated on the comment forms) who do not support the project as proposed. Their primary concerns included increased noise levels and vibrations; “dead man’s curve” (the FM 529 intersection with US 59); safety of the employees (both from vehicles crashing into the building and personal safety from the increase access to the building provided by the proposed addition of a frontage road); and the desire to have ROW be acquired from the south side of US 59 rather than from the Ocusoft property.

Other comments, primarily expressed by the Cities of Richmond and Rosenberg, and Fort Bend County, included concerns such as entrance/exit ramp locations, ROW requirements at the Brazos Towne Center, landscaping and aesthetic improvement requests, and a request to revise the design of the Reading Road intersection to have US 59 mainlanes and frontage lanes go over Reading Road and the adjacent railroad.

COMMON COMMENTS EXPRESSED MULTIPLE TIMES

These comments were expressed by the employees of Ocusoft. Responses made are referred to by number in the Comment/Response Table following this table. Other comments are responded to directly in the Comment/Response Table.

Item	General Comment	TxDOT Response
1	Safety will be compromised due to traffic being closer to the building (i.e., increased risk of building being crashed into).	The proposed frontage roads would meet current interstate design standards. The mainlanes would not move closer to the facility at this location. Traffic including 18-wheelers would be on the proposed frontage road; however, TxDOT proposes to reverse the ramp directions at Station 1080+00, just east of this location. Therefore, vehicles exiting US 59 and wishing to go to Kroesche Road would exit just east of Bamore Road and travel the frontage road to Kroesche Road. Traffic exiting for Cottonwood Church Road would exit at FM 529. It is anticipated that this would reduce the amount of traffic on the frontage roads in this area. Vehicle speed would also be reduced at this location, compared with the mainlanes.
2	Noise levels and vibrations will increase.	A noise analysis was performed in accordance with TxDOT's *Guidelines for Analysis and Abatement of Roadway Traffic Noise* (2011). Existing and predicted traffic noise levels were modeled at receiver locations that represent land use activity areas adjacent to the proposed project that might be impacted by traffic noise and potentially benefit from feasible and reasonable noise abatement. The noise analysis identified noise impacts at multiple locations. One preliminary barrier was evaluated as both reasonable and feasible: a 1,609-foot long by 14-foot high barrier adjacent to a portion of the New Territory neighborhood. This barrier would benefit an estimated 18 residences.
3	DPS and law enforcement are frequently stopping/pulling vehicles over.	Comment noted. The DPS and local law enforcement pull vehicles over throughout the corridor and the region.
4	Safety of the employees will be compromised due to increased access to the company/building.	Access to and from the Ocusoft facility would not be changed by the US 59 roadway project. Currently, the driveway to the facility is located on northwest side along Kroesche Road, approximately 1,000 feet from the proposed roadway. This would not change. Although the proposed westbound frontage road would be located closer to facility, it would not provide direct access.
5	Fix/remove dead man's curve.	Comment noted. TxDOT will further evaluate this intersection.
6	ROW should be taken from the south side of US 59 (east of Kroeschke) since that land is undeveloped.	Right-of-way (ROW) acquisition is split evenly in this location. In order to acquire the ROW solely from the south side of US 59, TxDOT would have to shift the mainlanes and the Kroesche Road intersection, which would also affect the proposed alignment for several thousand feet.
7	Could use green area for expansion / The amount of land used is 350' elsewhere - near Ocusoft 415' will be used - suggestion - reduce green belt area.	A 350' ROW is appropriate only where there are no on/off ramps or intersections. Wider ROW is needed where there are on/off ramps near intersections. This space is also necessary for safety and drainage.
8	The turning lanes at Frontage Road are not supported by traffic.	Comment noted. There are facilities north and south of US 59 in this area that would benefit from a safe and efficient intersection at this location.

COMMENT / RESPONSE TABLE

#	NAME	REPRESENTING	PUBLIC COMMENT	RESPONSE
By Letter				
1	Vincent M. Morales, Jr.	Mayor, City of Rosenberg	See Comment Letter dated May 16, 2013. Summarized comments (excerpts): 1. Additional lane capacity for designated movements on SH 36 include traffic signal synchronization with nearby intersection of Callendar Street must be included. 2. The City has plans to reconfigure the Bryan Road intersection at FM 2218, relocating the intersection away from US Hwy 59, which must be taken into consideration. 3. The City would like confirmation the frontage roads will be constructed as shown on the schematic. 4. R.O.W. between Reading Road and FM 762. According to the recollections of City Staff, the ultimate R.O.W. width was discussed in great detail with the former TxDOT Area Engineer, Jim Hunt and the Developer of the Brazos Town Center to ensure a sufficient amount of open space was retained to accommodate the future widening of US Hwy 59. The City would like to confirm the scope of this project phase will end south of Reading Road. The City is requesting a review of the additional R.O.W. requirements between Reading Road and FM 762 taking into account design criteria previously discussed and agreed upon. Mutually agreed upon R.O.W. width and design modifications to accommodate the reduced R.O.W. width will need to be incorporated into the next phase of the expansion project. 5. The City is formally requesting this same concept (U5 Hwy 59 mainlanes elevated over FM 762) be applied to the Reading Road intersection. Designated U-turn lanes must also be incorporated into the design. 6. The City is formally requesting the same concept used for locating ramps be applied to this segment of the project which should result in the addition of at least 1 exit ramp immediately north of the Spur 10 intersection.	1. Traffic signal timing would be adjusted to accommodate additional traffic. An intersection study is underway to determine the required traffic signal synchronization. 2. The Plans to reconfigure the Bryan Road intersection have been forwarded to the Designers. This would be addressed in the Plan Specifications and Engineering (PS&E) phase of the project. 3. Frontage roads would be constructed as shown. 4. TxDOT will review this portion of the proposed project. Any future design changes would be addressed in a Re-evaluation. 5. TxDOT will further evaluate the reversal of this grade separation at Reading Road. 6. TxDOT propose to reverse the northbound entrance ramp between Spur 10 and Cottonwood Church Road (at Sta. 990+00) to be an exit ramp.

#	NAME	REPRESENTING	PUBLIC COMMENT	RESPONSE
			7. The City would like to see painting and landscaping improvements incorporated into the design of the project, including opportunities to identify the stretch of highway as being "Rosenberg" through paint schemes similar to the SH 36 and FM 2218 overpasses and consistent landscaping. Additionally, we would request that opportunities for wayfinding signage to significant destinations be included, such as Seabourne Creek Regional Sports Complex and Nature Park, Historic Downtown Rosenberg, Traylor Stadium, Rosenberg Business Park, Fort Bend County Fairgrounds, City Hall, and Brazos Town Center.	7. A consistent painting color scheme would be maintained throughout the project length. TxDOT would work with the Cities of Richmond and Rosenberg to create a consistent landscaping plan and develop a uniform signage. A new signage plan would be developed during the Plan Specifications and Engineering (PS&E) phase of project. Appropriate signage would conform to the Manual on Uniform Traffic Control Devices (MUTCD) and TxDOT standards. The Green Ribbon Project, a corridor landscape master plan, would provide conceptual guidance to integrate environmental aesthetics and roadway functionality into the design. Landscaping would begin after the completion of construction phase of the project. TxDOT would work with the Cities of Richmond and Rosenberg to create a consistent landscaping plan.

#	NAME	REPRESENTING	PUBLIC COMMENT	RESPONSE
2	Terri Vela	City Manager, City of Richmond	See Comment Letter dated May 30, 2013. Summarized comments: In a recent office discussion, a comment was made that the main lanes will be going over Reading Road. This change, which we agree should be made, will cause all of the traffic from FM 762 to US 59 south to have to go through the Reading Road intersection and enter the main lanes near FM 2218. This seems like quite a long distance with an intersection creating a stop in traffic before being able to enter the main lanes. A possible solution may be to change the south bound entrance ramp just north of FM 762, to an exit ramp and the exit ramp south of FM 762, to an entrance ramp. Plan reviews indicate that the project will include multiple overpasses, vertical surfaces and green spaces. We want to be assured of aesthetically pleasing signage that will identify the highway as being "Richmond" through paint schemes similar to the FM 2218 overpass. We would also like to request that way finding signage to significant destinations be included, such as Historic Downtown Richmond, Morton Cemetery, Fort Bend County Courthouse Complex, George Park, Wessendorff Park, Clay Park and George Memorial Library.	TxDOT will further evaluate the reversal of this grade separation at Reading Road. TxDOT proposes to relocate the southbound entrance ramp at Sta. 1420+00 to approximately Sta. 1370+00. A consistent painting color scheme would be maintained throughout the project length. TxDOT would work with the Cities of Richmond and Rosenberg to create a consistent landscaping plan and develop uniform signage. A new signage plan would be developed during the Plan Specifications and Engineering (PS&E) phase of project. Appropriate signage would conform to Manual on Uniform Traffic Control Devices (MUTCD) and TxDOT standards.
Via E-Mail				
3	Richard W. Stolleis, PE	Fort Bend County Engineer 1124 Blume Road Rosenberg, Texas 77471-1449 Richard.Stolleis@FortBendCountyTX.gov office.281.633.7506	All, the following comments and questions are based on the Fort Bend County Engineering Department's review of the Project Schematic presented at the Public Hearing in Rosenberg at Terry High School on May 16, 2013. The County looks forward to working with TxDOT to implement this important project. The County is very supportive of TxDOT's efforts to complete this project and we appreciate the opportunity to submit our thoughts related to the project. Submitted via email: May 30, 2013 Fort Bend County Engineering Department comments are as follows: 1. Consider reversing the NB [northbound] entrance ramp at Station 995+00 and NB exit ramp at Station 1045+00. 2. Consider reversing the SB [southbound] exit ramp at Station 975+00 and SB exit ramp at Station 1045+00.	Thank you for your support on this project. TxDOT has evaluated the County's requests and has the following responses: 1. TxDOT proposes to reverse these ramps. 2.TxDOT proposes to reverse these ramps.

#	NAME	REPRESENTING	PUBLIC COMMENT	RESPONSE
			3. Consider reconfiguration of the SB frontage roads in the area of Spur 529 to create the continuous frontage roads. 4. Consider reversing the NB entrance ramp at Station 1080+00 and the NB exit ramp at Station 1115+00. If the ramps are not reversed, relocate the exit ramp at Station 1115+00 to the south to accommodate a future County Fairgrounds entrance road (80' Fort Bend County Access easement shown on the schematic). 5. Consider reversing the SB exit ramp at Station 1080+00 and the SB entrance ramp at Station 1115+00. 6. Consider converting proposed Reading Road overpass to a conventional diamond intersection to improve traffic movements at this location. 7. Consider reversing the SB exit ramp at Station 1370+00 and the SB entrance ramp at Station 1420+00 to provide direct FM 762 to US 59 South without having to travel along the frontage roads for approximately one and one-half miles and if the Reading Road intersection is changed without having travel through the requested diamond intersection. 8. Coordinate the project design adjoining the FM 762 Park & Ride facilities with the Fort Bend Public Transportation Department to accommodate future contemplated enhancement of Park & Ride services at this location. 9. Provide additional lane lengths on the exit ramp to FM 762 to allow for stacking and to facilitate free-flow of traffic in the turning lanes. 10. Reconfigure frontage roads and install retaining walls, as needed, to minimize additional right-of-way requirements in the vicinity of FM 762 and Reading Road. 11. Coordinate the NB frontage road design with existing on-the-ground conditions to determine whether the proposed pavement stub-outs are needed at Stations 1510+00 and 1526+00. 12. If additional right-of-way is required at the Oak Bend Medical Facility, revise the design to accommodate an additional driveway for the emergency room access that will be affected by the taking.	2. TxDOT proposes to make this requested change. 3. TxDOT proposes to reverse these ramps. 5. TxDOT proposes to reverse these ramps. 6. TxDOT will further review this request at Reading Road. Future changes at this location would be evaluated in a Re-evaluation. 7. TxDOT proposes to relocate the southbound entrance ramp at Sta. 1420+00 to approximately Sta. 1370+00. 8. TxDOT is coordinating with the Fort Bend Public Transportation Department regarding this request. At a point where an alternative design is identified, it would be evaluated in a Re-evaluation. 9. TxDOT will further review this request. Future changes at this location would be evaluated in a Re-evaluation 10. TxDOT proposes to reconfigure the proposed frontage roads between FM 762 and Reading Road by constructing retaining walls on both sides in the depressed section instead of a cut side slope design in order to minimize additional ROW or eliminate ROW taking. 11. Stub-outs were shown on draft schematics prior to those shown at the hearing; they are no longer in the proposed design. 12. TxDOT proposes to accommodate an additional driveway for the emergency room access.

#	NAME	REPRESENTING	PUBLIC COMMENT	RESPONSE
4	Charles A. Kalkomey, P.E., RPLS	City Engineer, City of Rosenberg Vice President Rosenberg Operations Jones & Carter, Inc.	As the City Engineer for Rosenberg, from a further review of the information presented at the Public Hearing held on May 16, 2013, I offer the following comment on behalf of the City of Rosenberg: We have concerns regarding the arrangement of the entrance and exit ramps between Spur 10 and SH 36 for US 59 North. The ramps as proposed do not follow the typical urban section layout that exists between SH 36 and FM 762. This situation is especially highlighted as traffic wanting to arrive at Cottonwood Church Road must exit on the southwest side of Spur 10 and travel through that intersection. Fort Bend County has a road ROW on the west side of the old railroad line, and the ramp layout is not conducive to that potential road. The future Bamore Road intersection is impacted by this design. Also, traffic leaving the Fort Bend County Fairgrounds on Fairgrounds Road must pass through the SH 36 intersection before entering US 59. It would be much more efficient during those major fairground uses if there was an entrance ramp for northbound traffic to utilize, reducing the conflicts at SH 36. In summary, we request that you reconsider the entrance and exit ramp locations on US 59 between Spur 10 and SH 36 to utilize the urban section pattern currently existing in Rosenberg east of SH36. We would welcome the opportunity to visit with the design to discuss our concerns.	TxDOT proposes to make the following ramp reversals: • Between Spur 10 and Cottonwood Church Road - reversed the proposed northbound entrance ramp at Sta. 995+00 and southbound exit ramp at Sta. 975+00 (to a northbound exit ramp and a southbound entrance ramp, respectively). • Between Cottonwood Church Road and Kroesche Road - reversed the proposed northbound exit ramp at Sta. 1045+00 and southbound entrance ramp at Sta. 1045+00 (to a northbound entrance ramp and a southbound exit ramp, respectively). • Between Kroesche Road and Bamore Road - reversed the proposed northbound entrance ramp at Sta. 1080+00 and northbound exit ramp at Sta. 1115+00 to an exit ramp and entrance ramp, respectively; reversed the proposed southbound exit ramp at Sta. 1080+00 and southbound entrance ramp at Sta. 1115+00 to an entrance ramp and exit ramp, respectively. This reversed these two ramp pairs from a conventional ramping pattern to an urban ramping pattern.

#	NAME	REPRESENTING	PUBLIC COMMENT	RESPONSE
5	Mark Schmid	Owner/Operator Sam-Cas Enterprises Inc dba McDonald's 2006 Thompson Rd Suite 100 Richmond,Texas 77469	I'd like to start by saying, if this proposal stays the way it is, it will put me out of business. This will also put my neighboring 18 wheeler fuel station out of business as well. We are used to the existing entrance/egress situation at hand. What is proposed would make entering my property most difficult and unenticing. In order to visit us coming north, one would have to exit onto the service road way back prior to the Spur 10 bridge. In order to visit us coming south, one would have to exit onto the service road way back prior to Kroesche Rd. Immediate departure from my property is fine yet one must take the service road past Spur 10 going South and past Kroesche going North in order to re-enter the freeway. My customer would be inconvenienced to the point that they would NOT patronize us. This project will discourage our used to customers that we have captured in the past. We will NOT survive this. I recommend Freeway entrance / egress options much closer to my place of business. It must NOT be made difficult to visit our place of business.	TxDOT proposes to reverse the northbound entrance ramp and southbound exit ramp between Spur 10 and Cottonwood Church Road to a northbound exit ramp and a southbound entrance ramp, respectively.
6	Marc and Crystal Anderson	Residents of Fairpark Village in Rosenberg, TX (south of I-69 on SH 36)	I am strongly in favor of this project and request that it be completed as soon as possible (as I'm sure most people agree). I don't know what the next steps are and how long they will take, but it's not soon enough. Traffic is horribly bottle-necked where US-59 (now I-69) narrows to two lanes coming from the north. Really is a safety hazard and there always seems to be an accident in this area. In addition, lack of contiguous frontage roads is also a real pain for traffic in this area. Lots of growth has happened here, in the Brazos Town Center especially, and due to the lack of frontage roads traffic IN this shopping center is congested as well (not to mention the strange ways of getting on and off I-69). Is there an "easy button" somewhere (maybe labeled "stimulus") that'll bump up the timetable on this project?	Your support for the project and concerns for its speed of completion are noted.
By Comment Form				
7	Shantell Hurt	Ocusoft (Employee)	My feelings toward the matter of expanding the highway is fine. But as far as expanding in the front of the Building space danger can uphold. If there is a collision if could affect our Ocusoft Building. Secondly it will be a huge noise hassle including the vibrations. The DPS also stop several cars so that be right in our grasp. If only the construction could be moved further down the road that would be swell.	Please see response table under "**COMMON COMMENTS EXPRESSED MULTIPLE TIMES"**. Construction needs to occur throughout the corridor; avoiding construction in one location within the project limits would not meet the need for and purpose of the project.

#	NAME	REPRESENTING	PUBLIC COMMENT	RESPONSE
8	Cynthia L. Barratt	Ocusoft (Employee)	We are concerned about employee safety due to access road proximity and traffic (increased). Mostly women who work in building-we are pharmaceutical company and want to avoid potential for crime. Suggestion- move project 100' south to straighten out "dead mans curve" at 529 and avoid cost of acquiring improved land vs unimproved farm land and accomplish TxDOT goals. We are concerned about noise, vibrations, etc. Kroesche Road could be a "dead end" on both sides of the freeway and reduce cost of the complete project. In addition, the traffic in the Kroesche Road area does not support the 5 lanes proposed. Delay or stop Kroesche project until traffic/population warrants and save money. The amount of land used is 350' elsewehere - near Ocusoft 415' will be used - suggestion - reduce green belt area.	Please see response table under "**COMMON COMMENTS EXPRESSED MULTIPLE TIMES"**. Comments noted.
9	Samantha Erias	Ocusoft (Employee)	Safety, noise, pushing it further can help fix "Dead man" turn, the turning lanes at Frontage Road is not supported by traffic, there always law enforcement stopped/pulling vehicles over it would be very close.	Please see response table under "**COMMON COMMENTS EXPRESSED MULTIPLE TIMES"**.
10	Eunice Pensado	Ocusoft (Employee)	Safety, noise, DPS/Law enforcement stop traffic. Dead's mans curb (100ft south onto the cotton fields) making it straight will be less accidents. Turning lane at intersection Frontage Road is not supported by the traffic in the area.	Please see response table under "**COMMON COMMENTS EXPRESSED MULTIPLE TIMES"**.
11	Irene Herrera	Ocusoft (Employee)	DPS/Law Enforcement stop traffic you are always seeing DPS pull some one and even bust people what happens if they get to our office. Safety Noise if you move it south you can get rid of dead man curve. Turning lanes intersection on the frontage is not supported by the traffic area. Safety wise is if you move lanes to our door what happens if a eighteen wheeler has an accident then it would be on our desk someone can get hurt or worse. How will the employees get out from work without getting hurt from a upcoming vehicle.	Please see response table under "**COMMON COMMENTS EXPRESSED MULTIPLE TIMES"**.
12	Danyel Moore	Ocusoft (Employee)	Our safety is at risk, DPS and law enforcement make traffic stops all the time. Why not move over to the other side there is nothing but field and it's for sale. turning lane at the intersection frontage is not supported by traffic in area. Move the lanes to the south at least 100 feet. Dead man curve need to be straight it will be less accident.	Please see response table under "**COMMON COMMENTS EXPRESSED MULTIPLE TIMES"**.
13	Hebert Castille	Ocusoft (Employee)	Safety/Noise having a hard time trying to get in the job with the big trucks on the feeda. Also don't like dead mans curve.	Please see response table under "**COMMON COMMENTS EXPRESSED MULTIPLE TIMES"**.
14	Ofelia Rocha	Ocusoft (Employee)	I am worried about my safety. Just recently an 18 wheeler ran off the road just a few yards away from Ocusoft. Can you imagine if there had not been empty land there? DPS/law enforcement does frequent stops in front of our building. The last thing we need is for a stop to so wrong. There is not enough traffic for such a big expansion. If plans get changed dead mans curve should be considered.	Please see response table under "**COMMON COMMENTS EXPRESSED MULTIPLE TIMES"**.
15	Cassandra Vargos	Ocusoft (Employee)	This will make it very noisy, not safe being so close to our building. Also when DPS stops cars and truck it will be right at our front door. There is land right across from us that is for sell use that side.	Please see response table under "**COMMON COMMENTS EXPRESSED MULTIPLE TIMES"**.

#	NAME	REPRESENTING	PUBLIC COMMENT	RESPONSE
16	Monica Gonzales	Ocusoft (Employee)	DPS/Law enforcement stop traffic. Safety of employees at ocusoft, the noise of cars passing by. Turning lanes at turning point not supported by traffic in the area. Please move south 100ft. Dead mans curve.	Please see response table under "**COMMON COMMENTS EXPRESSED MULTIPLE TIMES"**.
17	Rose Schroer	Ocusoft (Employee)	I am concerned about our safety, the noise level, the trucks coming off the highway. If it could be moved 100 feet south it would go into the cotton fields across from our building. By going south it would also improve "dead man's curve". Also there is not enough exiting feeder traffic to warrant that many lanes for an exit.	Please see response table under "**COMMON COMMENTS EXPRESSED MULTIPLE TIMES"**.
18	Barbara Kunz	Ocusoft (Employee)	Will cause safety issues for entering my office at 3044 SWFY Road. This could be more cost wise to move the road more southerly involving crop land and not commercial property of Ocusoft. Since we will not be able to have a fence around our property I will be afraid of the type of traffic. Our access to my job will be inconvenient. Why aren't we using the Green area instead of private property owners. Why are we spending money on a project that will not benefit safety issues and traffic. DPS and Law enforcement stop traffic constantly. Turn lane does not supported by traffic in the area.	Please see response table under "**COMMON COMMENTS EXPRESSED MULTIPLE TIMES"**. The project would benefit the region by improving mobility and reducing congestion.
19	Guadalupe Alvarez	Ocusoft (Employee)	It will be noisy, for my safety, law enforcement stops traffic in front of our office. If land is needed move it into the cotton field in front of us. Turning lanes intersection on frontage road is not supported by traffic in the area. If the road at Dead Man's curve as moved the freeway will run straight and it will be eliminated.	Please see response table under "**COMMON COMMENTS EXPRESSED MULTIPLE TIMES"**.
20	Amy Estrada	Ocusoft (Employee)	Safety reasons, traffic would be too close to building, will cause excessive noise and pollution. I don't want anyone crashing into the building.	Please see response table under "**COMMON COMMENTS EXPRESSED MULTIPLE TIMES"**.
21	Karen L. Gates	Ocusoft (Employee)	I do not support this project because the freeway would come too close to my workplace and would pose a health hazard.	Please see response table under "**COMMON COMMENTS EXPRESSED MULTIPLE TIMES"**.
22	Stephanie Ball	Ocusoft (Employee)	Will allow easy access to break ins and will be dangerous to the people who work here. The noise level will rise and we do most of our business on the phone.	Please see response table under "**COMMON COMMENTS EXPRESSED MULTIPLE TIMES"**.
23	Brenda Schneider	Ocusoft (Employee)	Proposes danger to our building and our people who work at the front of the building. Will cause excessive noise and pollution. Will allow easy access for break in.	Please see response table under "**COMMON COMMENTS EXPRESSED MULTIPLE TIMES"**.
24	Donesha Gartica	Ocusoft (Employee)	Going to be too much traffic and it's going to be to close the building. It is also going to take away a big portion of the land in the front of the building.	Please see response table under "**COMMON COMMENTS EXPRESSED MULTIPLE TIMES"**.

#	NAME	REPRESENTING	PUBLIC COMMENT	RESPONSE
25	Juan Hernandez	Ocusoft (Employee)	I believe that it will be a huge **safety issue**! It think the plans should be look at again before putting us in danger, it is a buzy hwy. Please thing about the people not just the money. It doesn't hurt to listen sometimes. It was are/land before, let it stay that way.	Please see response table under "**COMMON COMMENTS EXPRESSED MULTIPLE TIMES"**.
26	Guadalupe Espinoza, Jr	Ocusoft (Employee)	Safety would be a main concern because of a lot of drug trafficking in the area. I would not want all of my coworker to be put in danger or myself. Do know about yourselves, but I would like to see my family at the end of the day. It would benefit you a lot more to buy undeveloped property across the street and would be a lot cheaper.	Please see response table under "**COMMON COMMENTS EXPRESSED MULTIPLE TIMES"**.
27	Jose Faustino	Ocusoft (Employee)	This will be too close to our building, risk will be added to our concern safety issue is the bottom line.	Please see response table under "**COMMON COMMENTS EXPRESSED MULTIPLE TIMES"**.
28	Craig Taylor	Ocusoft (Employee)	My concerns are about noise and safety at our front door. We have had several accident on this section of frwy at the truck have travel 50-100 feet off frwy. And safety, if driver runs they would be at our front.	Please see response table under "**COMMON COMMENTS EXPRESSED MULTIPLE TIMES"**.
29	Benandrea McZeal	Ocusoft (Employee)	The current plan bring roadway to close to the building it would be safty harzed noisey for my job.	Please see response table under "**COMMON COMMENTS EXPRESSED MULTIPLE TIMES"**.
30	Sylvia Davila	Ocusoft (Employee)	Exit will be nice, only in different location not as it's planned now.	Please see response table under "**COMMON COMMENTS EXPRESSED MULTIPLE TIMES"**.
31	Diana Resendiz	Ocusoft (Employee)	We appreciate the thought of the freeway by our company but do not like the way you all have it planned now. Exit will be nice but it in different area.	Please see response table under "**COMMON COMMENTS EXPRESSED MULTIPLE TIMES"**.
32	Mary Lopez	Ocusoft (Employee)	Issues I have is it will be to loud, safety problems, drug bust. To close to the company.	Please see response table under "**COMMON COMMENTS EXPRESSED MULTIPLE TIMES"**.
33	Onesia Taylor	Ocusoft (Employee)	I live in Houston and I commute to 30444 SW Frwy in Rosenberg, TX and very unhappy about the time it would take to completed the construction. Also, I think it will be to noise for this call center and it's just not safe. So please reconsider your plan for this project at this time. There are so many 18-wheeler trucks that pass on this highway and don't you think? It's dangerous enough.	Please see response table under "**COMMON COMMENTS EXPRESSED MULTIPLE TIMES"**. Your concern for the speed of completion is noted.
34	Darlene Hatfield	Ocusoft (Employee)	Safety, noise, DPS/Law enforcement stopping people, heavy increase in traffic due to exit, if move lanes to the south by 100 feet would incorporate farm land already for sale and would eliminate "dead man's curve" at 529 and southwest freeway, turning lanes at intersection on frontage road is not supported by traffic in the area.	Please see response table under "**COMMON COMMENTS EXPRESSED MULTIPLE TIMES"**.

#	NAME	REPRESENTING	PUBLIC COMMENT	RESPONSE
35	Azanette Hernandez	Ocusoft (Employee)	Reasons why I am against the expansion of future I69 is because it would create a horrible place for accidents which would put all of Ocusoft's safety at RISK. The expansion should be south 100ft where the land is currently up for sale and there is no businesses or buildings in that area. This would take out dead man's curve! DPS is currently stopping traffic in front of our building.	Please see response table under "**COMMON COMMENTS EXPRESSED MULTIPLE TIMES"**.
36	K. Whitbey	Ocusoft (Employee)	I prefer that expansion be made further south (an long [sic]) KOESCHE RD. there is only cotton fields there now. No business or personal resident would be affected. The feeder roads proposed should be started further south, like at cottonwood, could straighten out the deadly curve there. The noise increase would not be a positive change.	Please see response table under "**COMMON COMMENTS EXPRESSED MULTIPLE TIMES"**.
37	Nathan Baker	Ocusoft (Employee)	It is a major safety issue for everyone at Ocusoft. The interstate will be too close to where I work and big trucks could move off the road and run into our building. The noise from the traffic will be too loud and could effect the way I work. There are cotton field for sale that can be purchased so that the interstate can run through.	Please see response table under "**COMMON COMMENTS EXPRESSED MULTIPLE TIMES"**.
38	Chris Shipley	Ocusoft (Employee)	The safety of the company. Increased traffic causes increase in traffic stops directly in front of our building. Unimproved farmland for sale across the highway would straighten out "dead mans curve" instead of using improved lane and taking from local business. Not enough traffic to warrant 5 frontage lanes. Truck traffic directly, and in such proximity to building, would cause for work distractions and interruptions.	Please see response table under "**COMMON COMMENTS EXPRESSED MULTIPLE TIMES"**. The frontage would consist of 2 through lanes, plus 3 dedicated turning lanes.
39	Norma Giron	Ocusoft (Employee)	Safety noise DPS law enforcement stop traffic but more impotanty truck drivers move dead man road. Turn lanes at intersection on frontage rd is not supported by all the traffic. Please takes this in consideration that really put us in risk.	Please see response table under "**COMMON COMMENTS EXPRESSED MULTIPLE TIMES"**.
40	Alma R. Romero	Ocusoft (Employee)	DPS law enforcement stopps traffic on freeway constantly, safety, the noise of all traffic but more importantly truck drivers. If we moved it south that dangerous curb can be a little bit more straight. Turning lane at intersection on Frontage Rd is not supported by all the traffic.	Please see response table under "**COMMON COMMENTS EXPRESSED MULTIPLE TIMES"**.
41	Ruthann Young	Ocusoft (Employee)	Law enforcement stops people regularly. If it was moved south it would take out dead mans curve. Turning lanes are not supported at the intersection on the frontage road. *Not safe!! *excessive noise!	Please see response table under "**COMMON COMMENTS EXPRESSED MULTIPLE TIMES"**.
42	Michelle Thomas	Ocusoft (Employee)	(1) Safety, (2) Noise, (3) Law enforcement stops people in front of our business everyday. (4) if roads are moved please move 100 ft on Cottonfield side south. (5) take out Deadmans curve. (6) Turning lanes at intersection on frontage Rd. is not supported by traffic in the area. We are not allowed to put up fence in front.	Please see response table under "**COMMON COMMENTS EXPRESSED MULTIPLE TIMES"**.

#	NAME	REPRESENTING	PUBLIC COMMENT	RESPONSE
43	Christine Benkenstein	Ocusoft (Employee)	Safety concerns for businesses. There will be less retail shops and restaurants. Horrible construction for many years. No reason to expand the area around here yet. Empty field across the freeway can be used for road. There are law enforcement stops that frequently stop traffic. There is not enough traffic to warrant as many proposed lanes for frontage road. Change proposed plans further south so less businesses will be affected.	Please see response table under "**COMMON COMMENTS EXPRESSED MULTIPLE TIMES"**.
44	Evangelina Garcia	Ocusoft (Employee)	Recently an 18 wheeler lost control and nearly hit a building. I feel that it is very dangerous to do this. It is not safe. DPS Law Inforcement stops traffic. Move 100 yards south towards farm land. Take out Dead Mans Curve. Not enough traffic warrants this change.	Please see response table under "**COMMON COMMENTS EXPRESSED MULTIPLE TIMES"**.
45	Jimmy Martinez	Ocusoft (Employee)	Safety, noise, DPS law enforcement traffic stops. Dead mans curve would be straight turn lanes on Frontage Road is not supported by the traffic in the area. Move the lanes south one hundred feet.	Please see response table under "**COMMON COMMENTS EXPRESSED MULTIPLE TIMES"**.
46	Violanda Cisneros	Ocusoft (Employee)	Safety, noise, DPS law enforcement stop traffic often can they move the FW 100 foot south, we can take out dead mans curve, turn lane is not supported by the traffic in the area.	Please see response table under "**COMMON COMMENTS EXPRESSED MULTIPLE TIMES"**.
47	Jeff Ruiz	Ocusoft (Employee)	Not as proposed! Safety – noise - the freeway needs to be moved at least 100 ft to the south (farm land) employees at Ocusoft could be in danger from the traffic. The frontage road turning lanes are not supported by the amount of traffic.	Please see response table under "**COMMON COMMENTS EXPRESSED MULTIPLE TIMES"**.
48	Patrick Dewitt	Ocusoft (Employee)	Safety problems, constant law enforcement, possible unimproved sight across the freeway, the frontage road is not supported by the area's traffic.	Please see response table under "**COMMON COMMENTS EXPRESSED MULTIPLE TIMES"**.
49	Becky Emig	Ocusoft (Employee)	Worried about safety and noise. DPS law enforcement stopping traffic in front of our building. Why not use the field across the freeway from us? It is for sale. Turning lanes on intersection on frontage road is not supported by traffic in this area.	Please see response table under "**COMMON COMMENTS EXPRESSED MULTIPLE TIMES"**.
50	Sharon Rosenbaum	Ocusoft (Employee)	Concerned of safety, DPS is always stopping in front of the building. Truck will be close to the building, glass, windows, Rocks. The noise is loud now and will be worse and rumbles. The curve would be straighter at "Dead man's curve". If you would take from the other side of the freeway at least 100 feet. Buy from the cotton fields that are for sale. Having that many turning lanes does not support the amount for traffic for 529.	Please see response table under "**COMMON COMMENTS EXPRESSED MULTIPLE TIMES"**.
51	Lucinda Dittfurth	Ocusoft (Employee)	Need to move 100 feet south that property is already 4 sale. Its not safe if our parking lot is next to freeway. DPS-Law enforcement stops cars in front of property. Move south to take out Dead mans curve. Too many turning lanes at intersection on Frontage Rd not supported by traffic.	Please see response table under "**COMMON COMMENTS EXPRESSED MULTIPLE TIMES"**.

#	NAME	REPRESENTING	PUBLIC COMMENT	RESPONSE
52	Gabriel Lizalde	Wife Works at Ocusoft	I am afraid for my wife's safety at her job if US 59 is expanded into Ocusofts land. There is too much traffic for that road to be so close to company. To many police stops are done near her job, can you imagine if one went wrong being so close to their front offices if a vehicle went off the road like 18 wheeler did not long ago then it would run straight into Ocusoft.	Please see response table under "**COMMON COMMENTS EXPRESSED MULTIPLE TIMES"**.
53	Enrique Hernandez	Ocusoft (Employee)	I am worried about the amount of traffic and potential accident that could happen in the area as well as safety with such easy of access to the business from hwy.	Please see response table under "**COMMON COMMENTS EXPRESSED MULTIPLE TIMES"**.
54	Linda Lang	Ocusoft (Employee)	I do not support the proposed project. There are women who work late hours, including myself and the increased traffic poses a safety threat. The proximity of the proposed access roads to our campus is also a concern cause of the added noise and exposure to traffic incidents. I would suggest moving the project further south where businesses are not as affected.	Please see response table under "**COMMON COMMENTS EXPRESSED MULTIPLE TIMES"**.
55	Joe Aguillon	Ocusoft (Employee)	I am not in support of the proposed project. It will be a safety issue since it will be very close to our door. If it was to move further south about 200 yards that would be ok. You may know that it is less expensive to purchase farmland than business life.	Please see response table under "**COMMON COMMENTS EXPRESSED MULTIPLE TIMES"**.
56	Joe Gregory	Ocusoft (Employee)	Proposed exit for Krusche Rd and 529 will cause heavy traffic and noise to place I work. Increased traffic [cause?] become a security problem. Would make sense to move south approx. 100 ft into farmland.	Please see response table under "**COMMON COMMENTS EXPRESSED MULTIPLE TIMES"**.
57	Troy Smith	Ocusoft (Employee)	Recommend move 100 ft south to farmland. The farmland will be less expensive because it is undeveloped. New proposed will be disruptive noise and potential security risk because of increased expense to unsecured parking lot. Safety of semi-trucks putting close to the building and potentially wrecking into building,	Please see response table under "**COMMON COMMENTS EXPRESSED MULTIPLE TIMES"**.
58	Thomas Mason	Ocusoft (Employee)	This project will cause excess noise and safety concerns for our office our company deals in pharma and thus we have safety concern over and above normal businesses. This project a proposed will increase traffic on our road at a very least I would suggest moving the road 100' to the south away from Ocusoft.	Please see response table under "**COMMON COMMENTS EXPRESSED MULTIPLE TIMES"**.
59	Marilyn Parker	Ocusoft (Employee)	The traffic does not exist for a Kroesche exit. I am worried about the security of working late at night with the easy access to the feeder traffic to the building. Then 18 wheeler traffic will cause severe vibrations and noise and will cause disruption of my daily work. Wrecks will be more prominent.	Please see response table under "**COMMON COMMENTS EXPRESSED MULTIPLE TIMES"**.
60	Barbara Kunz	Ocusoft (Employee)	This project has unsupported traffic for 5 lanes. Could use green area for expansion. Change the angle of freeway to straighten out. Safety will be a real issue for workers because freeway will be expanded to my workplace-Ocusoft. Traffic/Safety getting dangerous for employees. It would be easier to approach farmers for sale of property. It could harm my employment because loss of revenue for my companies future expansion. Expand road when traffic warrants. Why waste our money when needed.	Please see response table under "**COMMON COMMENTS EXPRESSED MULTIPLE TIMES"**.

#	NAME	REPRESENTING	PUBLIC COMMENT	RESPONSE
61	Suzanne Moon	Ocusoft (Employee)	Traffic for area does not support plan; position expansion towards undeveloped land rather than developed property as cost advantage.	Please see response table under "**COMMON COMMENTS EXPRESSED MULTIPLE TIMES"**.
62	Kay Carlin	Ocusoft (Employee)	Unsupported traffic for the prospered 5 lanes. I would recommend that the Kroesch exit be delayed until traffic prompts the new access. Recommend using the green space between the highway. Concerned about our personal and company security, safety, and the noise/vibrations that will affect our business. Additional land is available and already has commercial gas/retail business available at 529 Spur and Cottonwood.	Please see response table under "**COMMON COMMENTS EXPRESSED MULTIPLE TIMES"**.
63	Mary Harris	Ocusoft (Employee)	Unsupportive due to traffic and safetive [sp?].	Please see response table under "**COMMON COMMENTS EXPRESSED MULTIPLE TIMES"**.
64	Coletle Startz	Ocusoft (Employee)	Unsupportive traffic and safety concerns.	Please see response table under "**COMMON COMMENTS EXPRESSED MULTIPLE TIMES"**.
65	Stacy Foster	Ocusoft (Employee)	I have very strong concerns with this project as proposed for the following reasons: the traffic flow in front of 30444 S.W. Frwy would increase very significantly as the south and exit would bring all traffic exiting for Kroesche Rd Spur 529, and Cottonwood Church Road. This increased traffic flow will increase noise and reduce safety at our facility. Moving Kroesche Rd intersection south by approxim 100 ft. would help reduce noise and traffic disturbance and undeveloped land on south side of hwy 59 would cost less than buying developed land on our property as proposed.	Please see response table under "**COMMON COMMENTS EXPRESSED MULTIPLE TIMES"**.
66	Patrick Ward	Ocusoft (Employee)	If median property cannot be used, it would seem to make more economic sense to purchase the undeveloped farm property on the south side of the freeway instead of the developed property on north side.	Please see response table under "**COMMON COMMENTS EXPRESSED MULTIPLE TIMES"**.
67	Jacque Burgess	Ocusoft (Employee)	I would ask that the proposed route be moved 100 ft to the south. Proposed plan would come too close to our building. The traffic noise will be very disturbing. Working late and leaving after dark is a safety concern.	Please see response table under "**COMMON COMMENTS EXPRESSED MULTIPLE TIMES"**.
68	Charles Hewitt	Ocusoft (Employee)	The encroachment of the feeder street will negatively affect my employer. Moving the main lanes and feeder lanes south would improve the drivability of U.S. 59 to smooth out the curve at Spur 529. Movement south would improve my employees ability to maintain security to the property. The FDA regulates access to the property.	Please see response table under "**COMMON COMMENTS EXPRESSED MULTIPLE TIMES"**.
69	Diana Montoya	Ocusoft (Employee)	Safety. Noise. DPS law enforcement stop traffic. Take out Dead man curve. Turning lane in frontage is not supported by traffic in area.	Please see response table under "**COMMON COMMENTS EXPRESSED MULTIPLE TIMES"**.

#	NAME	REPRESENTING	PUBLIC COMMENT	RESPONSE
70	Dorthy A. Eakins	Ocusoft (Employee)	1) DPS and local law enforcement stop people out in front of us daily 2) plenty of farm land for sale across frwy 3) exit for cottonwood church rd-truck stop-will be forced in front of us-high traffic- 4) turning lanes at Kroesche 5) is overkill for the amount of traffic 6) there was an 18 wheeler wreck last week between Ocusoft and Simtec, if the feeder street is placed where proposed it would have hit our building at my office window 6) the noise will be disruptive 7) the vibration of traffic that close will eventually cause damage to the building 8) since West Ft Bend Assoc wouldn't let us put a fence around our parking lot, it will less secure for our employees going to their cars.	Please see response table under "**COMMON COMMENTS EXPRESSED MULTIPLE TIMES"**.
71	Bonnie Ball	Ocusoft (Employee)	With the expansion it gives opportunities for safety issues to all employees having a major highway so close to a business increases risk of an accident impacting the building - parking lot and common areas. Having a major highway so close to a business increase both noise and air pollution. As a growing business we looked for property that we can grow on and taking property for expansion takes that opportunity away.	Please see response table under "**COMMON COMMENTS EXPRESSED MULTIPLE TIMES"**.
72	Marlene Anhaiser	Ocusoft (Employee)	Please move the project from using the business property of Ocusoft Inc to 100 yards down the freeway to property not owned by a business, less expensive for you.	Please see response table under "**COMMON COMMENTS EXPRESSED MULTIPLE TIMES"**.
73	Terrell Walker	Ocusoft (Employee)	The project would create a difficult work environment at my employer's location.	Please see response table under "**COMMON COMMENTS EXPRESSED MULTIPLE TIMES"**.
74	Kathie Owen	Ocusoft (Employee)	I support this project EXCEPT for the fact the plans are to destroy business property. This plan puts the frontage road right outside our front doors. Ocusoft 30444 SW Freeway. This appears VERY dangerous and destructive. Not to mention freeway traffic will distract from our business purposes and jobs.	Please see response table under "**COMMON COMMENTS EXPRESSED MULTIPLE TIMES"**.
75	Bernard T. Halloran	Business property owner or lessee.	This is to protest the amount of land to be taken from the front of Ocusoft. Inc. at 30444 Southwest Frwy, Rosenberg, TX 77471. Based upon the DOT proposal, there will be two safety issues. First, because fences are prohibited, the danger to Ocusoft employers and their vehicles will be significantly increased by the proximity of the proposed feeder road. Second, is the increased likelihood that the building itself, with its employee occupants, will be at risk from such traffic. Also, the noise and vibration of the closer traffic will be a distraction to and discomfort for the 130 employee-occupants of the Ocusoft building. The proposed changes are unnecessary. There is no off-ramp at Kroesche Road and none is needed. It would be beneficial to all concerned for the proposed ramp to be shifted closer to Cottonwood Church Road. There is also a question of economy. To the extent the right-of –way can be to the east on to farmland rather than to the west on to Ocusoft's developed property, it will save DOT funds. Thank you for considering our view.	Please see response table under "**COMMON COMMENTS EXPRESSED MULTIPLE TIMES"**.

#	NAME	REPRESENTING	PUBLIC COMMENT	RESPONSE
76	Mario Degollado, Jr.	Residential and business property owner or lessee. TGCSGA Region III President (2012-2013)	I feel that it bring more business to the area. More employment opp. [opportunities] to those living in the community.	Your support of the project is noted.
77	Diana Dabbs, MS.	Residential property owner or lessee	On the Spur 10 Bridge – Why are the plans to add the overpass to the cross over road instead of the freeway? By extending the existing cross over you save $ now but in the long run hem in the freeway from further expansion with the boundary of the flyover. Why not take the time now when traffic conditions do not depend on the length of the change to flip the intersection in preparation for future expansion.	Spur 10 needs to be elevated at this location to cross the railroad. Further potential expansion of the freeway at this location would not be impeded due to the widening of the Spur 10 grade separation.
78	Craig Ardrus		None [supports the project]	Your support of the project is noted.
79	Richard Fields	User who travels on facility often and interested in general mobility. Highway 36A Coalition.	I represent the Highway 36A Coalition, an organization advocating highway improvements along the SH 36 corridor from Spur 10 to Port Freeport, and north through Waller County to SH 6 north of Hempstead. We advocate effective planning for future traffic so public dollars can be used most efficiently. The entire US 59 corridor from Thompson Highway to Hillcroft inside the beltway has been designed for four general purpose main lanes in each direction and diamond lanes or high occupancy lanes in median. After examining the project schematic, our only concern is that in the next thirty years, traffic will increase sufficiently to require extending the four lanes in each direction. Where the transition occurs, we urge TxDOT to ensure the design is well-thought out, and that widening is inexpensive in the future and will not require new ROW or retaining wall construction. We are in support of the project. Further comments are that storage and merging lengths should be as generous as possible. Thank you.	Your support of the project is noted.

US 59 (from Spur 10 to SH 99)
Public Hearing Attendants

Texas Department of Transportation

James Koch, PE
Manuel Francisco, PE
Samuel Ainabe, PE
Jeff Volk, PE
Dee Rader, PE
Laura Lopez, PE
Grant Chim, PE
Susan Theiss
Joe Liggio
Sarah Wyckoff
Shianne Blease-Staine
Elizabeth Martin
Julia Hargrove
Carol Baisy
Raquelle Lewis

City of Rosenberg

Vincent Morales

Fort Bend County

Commissioner Richard Morrison, Precinct 1

Berg-Oliver Associates, Inc.

Amy M. Brook
Esther Rodriguez, PE
William Proctor

Appendix A: Affidavits of Publication

AFFIDAVIT OF PUBLICATION

STATE OF TEXAS:

COUNTY OF HARRIS:

Before me, the undersigned authority, a Notary Public in and for the State of Texas, on this day personally appeared, the Newspaper Representative at the HOUSTON CHRONICLE, a daily newspaper published in Harris County, Texas, and generally circulated in the Counties of: HARRIS, TRINITY, WALKER, GRIMES, POLK, SAN JACINTO, WASHINGTON, MONTGOMERY, LIBERTY, AUSTIN, WALLER, CHAMBERS, COLORADO, BRAZORIA, FORT BEND, GALVESTON, WHARTON, JACKSON, and MATAGORDA and that the publication, of which the annexed herein, or attached to, is a true and correct copy, was published to-wit:

TX DEPT OF TRANSPOR 25690171 26742225
RAN A LEGAL NOTICE
SIZE BEING: 1 X 144 L

product	date	class	page
hc	Apr 16 2013	1245.0	B_tuelg_10
hc	May 6 2013	1245.0	B_monlg_8

Edward Silva
NEWSPAPER REPRESENTATIVE

Sworn and subscribed to before me, this the 6th Day of May A.D. 2013

VERONICA M TYRONE NOTARY PUBLIC STATE OF TEXAS EXPIRES FEB. 10, 2016

Veronica M Tyrone
Notary Public in and for the State of Texas

Notice of Public Hearing US 59: from Spur 10 to SH 99

The Texas Department of Transportation (TxDOT) will conduct a public hearing on the proposed widening of US 59 from Spur 10 to SH 99, in Fort Bend County, Texas. The hearing will be conducted on Thursday, May 16, 2013, in the auditorium of Terry High School, at 5500 Ave N, Rosenberg, Texas 77471. The purpose of the hearing is to discuss the social, economic and environmental effects of the proposed project and receive comments from the public. The hearing will begin with an open house from 5:30 p.m. to 6:30 p.m. Project staff will answer questions on the proposed project during the open house. The formal public hearing will begin promptly at 6:30 p.m., followed by a public comment period.

From Spur 10 to FM 762, TxDOT proposes to widen the existing 4 lane divided highway to a 6 lane highway divided by a grassy median. This segment would also include continuous 2 lane frontage roads where they are currently discontinuous. Grade separation/interchange improvements would be performed at various intersections. From FM 762 to SH 99, the proposed project would widen the existing 4 lane divided highway to 8 general purpose lanes (4 each way), plus 2 additional high occupancy vehicle (HOV) lanes (one in each direction). Directions of travel would be separated by a concrete barrier. The segment would also include continuous 3 lane frontage roads, which are currently discontinuous 2 lane frontage roads.

The project would require approximately 54.95 acres of additional right-of-way and three commercial displacements. It would not require residential displacements. The project would increase vehicle capacity, reduce congestion, update US 59 to current design and safety standards, and rectify identified operational deficiencies

The Environmental Assessment, project exhibits, maps and design drawings will be available for review at the hearing. This information is available by appointment for review and copying at TxDOT's Houston District Office, 7600 Washington Avenue, Houston, Texas 77007, and at TxDOT's Fort Bend Area Office, 4235 SH 36, Rosenberg, Texas 77471.

All interested persons are invited to attend this hearing. Persons interested in attending the hearing that have special communication or accommodation needs are encouraged to contact the District Public Information Officer at (713) 802-5072 at least two working days before the hearing. The public hearing will be conducted in English. Requests for language interpreters or other special communication needs should be made at least two working days before the public hearing. TxDOT will make every reasonable effort to accommodate these needs. The TxDOT office is open Monday through Fri-

every reasonable effort to accommodate these needs. The TxDOT office is open Monday through Friday from 8:00 a.m. to 5:00 p.m., excluding state holidays.

Oral and written comments about this project may be presented at the hearing. Written statements may also be submitted to the TxDOT Houston District office at 7600 Washington Avenue, Houston, or mailed to the Director of Project Development, TxDOT Houston District, P.O. Box 1386, Houston, Texas 77251, or emailed to *hou-pioweb mail@txdot.gov*. Comments must be postmarked or emailed by May 30, 2013 to be included in the public hearing record.

HOUSTON CHRONICLE
Tuesday, April 16, 2013

Ad Number: 25690171
Insertion Number: N/A
Size: 1 Col x 144 ag
Color Type: 0

Advertiser: Texas Department of Transportatio...
Agency: N/A
Section-Page-Zone(s): B-10-All
Description:

BUSINESS

Pipeline to bypass congestion

Pipeline from page B6

ture build-out."

Plains All American Pipeline and other midstream companies have been expanding rapidly through acquisitions and construction to keep pace with growing production in the country's booming shale plays.

The McCamey-to-Gardendale pipeline will move crude from the Permian to the Plains All American-Enterprise Products Partners Eagle Ford Joint Venture Pipeline, which serves the Three Rivers and Corpus Christi markets.

That venture also can serve the Houston-area market through a connection to the Enterprise South Texas Crude Oil Pipeline, according to the Plains announcement.

White noted that as the Permian Basin once again becomes an increasingly prolific source of domestic crude production, it makes sense to bypass the bottleneck at the major hub in Cushing, Okla.

"Instead, they're taking it directly to Gardendale in the Eagle Ford," he said. "This makes much more sense from a cost standpoint and a logistical standpoint."

From Gardendale, the crude can be shipped to refineries along the Gulf.

Plains said it has a letter of intent for a majority of the pipeline capacity

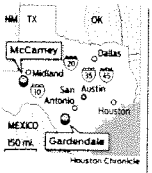

Houston Chronicle

and is in discussions with other potential shippers for the rest of the capacity.

Leone declined to identify the party that made the long-term commitment.

A publicly traded master limited partnership based in Houston, Plains All American Pipeline is involved in transporting, storing, and marketing crude oil and refined products, as well as processing, transporting, fractionating, storing and marketing natural gas liquids.

In December it announced a $500 million deal with Houston-based U.S. Development Group to buy crude oil rail terminals in three of the nation's most active shale plays: the Eagle Ford in South Texas; the Bakken in North Dakota; and the Niobrara in Colorado, along with an unloading terminal in St. James, La., and one under development in Bakersfield, Calif.

jeannie.kever@chron.com
twitter.com/JEKever

Customer feedback cited in changes

Customer from page B6

based H-E-B invited customers to try out a new scanning "tunnel" for the first time at its McCreless Market location on South New Braunfels Avenue.

The company spent about three years developing the so-called Fast Scan technology, which lets cashiers at the end of the register focus on bagging the already-scanned items, said Jaren Shaw, H-E-B's vice president of customer service. She said the company is in the "very early stages" of testing the checkout system and will wait to decide on expanding the concept.

"We were introduced to the concept of 360-degree item scanners in Europe a few years ago and have been watching the technology emerge since then," Shaw said in a statement. "H-E-B took an inclusive approach and developed the checkout fixture based on feedback from customers" and employees.

H-E-B

A 360-degree scanner at a McCreless Market location in San Antonio registers the bar code on a package of hot dog buns, even if it's upside down.

Rating the scanner

After shoppers finish their Fast Scan purchase, they can rate the new scanner by selecting one of four buttons with faces displaying emotions ranging from happy to angry.

Shaw said H-E-B has been encouraged by customer response.

"Fast Scan is without a doubt the newest technology our customers have experienced in checkout," she said. "One customer described it as 'high tech, high smile.'"

Like H-E-B, Wal-Mart cited customer feedback as the catalyst behind the development of its mobile scanning app that it has piloted at more than 200 locations across the U.S.

The Bentonville, Ark.-based retailer offers its Scan & Go service at stores in the Austin, Dallas and Houston areas.

There, shoppers can scan items on the Wal-Mart app, which then transfers the shopping list to one of the store's self-checkout registers so customers can pay without re-scanning the products.

Wal-Mart plans to roll out the app to other mobile devices in the near future, spokeswoman Hardie said.

"We began testing the feature late last year in two markets, and so far this year, more than half of our customers have come back to use the technology a second time," she said.

Recently, H-E-B has pulled the self-checkout registers from some stores.

"H-E-B's top priority in checkout is to offer the best customer service while getting our customers through the line quickly," spokeswoman Dya Campos said in an email. "We are not completely satisfied with the technology of self-checkout and the satisfaction of our customers as they interface with it."

Thousands in works

Meanwhile, Wal-Mart has doubled-down on self-checkout registers. This year the company will install 10,000 of them in more than 1,200 of its stores across the U.S.

"Our multiple checkout options give us a unique advantage to provide our customers with the quick, easy and convenient checkout experience they tell us they want," Jeff McAllister, Wal-Mart's senior vice president of innovation, said in a news release.

nmorton@express-news.net

$1.5 million awarded in Rice contest

$1.5 million from page B6

$100,000 from the Goose Society of Texas and $20,000 from NASA. The partnership made BriteSeed the same $100,000 offer to move to Houston.

BriteSeed is a medical device company developing a technology for blood vessel detection during surgical procedures.

MouseHouse, from the University of Chicago, won $102,000, which included a $95,000 Owl Investment Prize. MouseHouse has developed software to save time and money when managing laboratory animals used for medical research.

More than $1.5 million was awarded to all the winners.

The competition is hosted by the Rice Alliance for Technology and Entrepreneurship.

david.kaplan@chron.com
twitter.com/davkap

Scooter Store says it will offer products through distributors

Scooter from page B6

and reimbursement procedures." The company has been cooperating with authorities, according to the bankruptcy.

The Scooter Store is using the Chapter 11 filing "to seek to create a new, financially healthy provider that operates in strict accordance with all legal, contractual and regulatory requirements," company CEO Marty Landon said in a statement.

Just what that company will look like couldn't be determined.

Over the years, it has received hundreds of millions from Medicare. But when the federal government last week released a list of contractors selected to supply equipment to Medicare beneficiaries in 100 metropolitan areas starting July 1, the company was missing. It's not publicly known if it even participated in the bidding program.

A Scooter Store representative didn't respond to emailed questions, so it's unclear if it will focus on selling power-mobility devices to customers who can pay with cash or private insurance.

In its statement, The Scooter Store said under a new business model, it will offer its core products through a network of local distributors.

Following the sale of most of its assets, The Scooter Store said, it anticipates it will operate with a "streamlined footprint and a new focus on working with health care professionals."

The Scooter Store and 71 affiliates filed for bankruptcy protection in U.S. Bankruptcy Court in Wilmington, Del.

In December, two U.S. senators sent a letter to the Centers for Medicare & Medicaid Services wanting to know why The Scooter Store had received anywhere from $46.8 million to $87.7 million in Medicare overpayments but only had to pay back $19.5 million.

The agency was listed as one of the company's largest creditors in the bankruptcy petition. An agency spokeswoman didn't respond to a query.

In January, a CBS News report questioned whether power wheelchair companies were "ripping off the government." An ex-Scooter Store employee said the company's goal was to "bulldoze" doctors into writing power wheelchair prescriptions.

Still, according to its bankruptcy filing, The Scooter Store has determined it is worth more staying in operation than the company would be if it liquidated.

The Scooter Store operates 57 distribution centers in 41 states.

Doug Harrison, The Scooter Store's founder and former chairman and CEO, is listed as holding 18.3 percent of its shares.

"I remain extremely proud of the thousands of men and women of The Scooter Store who helped hundreds of thousands of disabled elderly people stay mobile and independent in their homes," Harrison wrote in an email. "The false allegations and well-intentioned but fatally flawed government policies that have led to the current situation are truly tragic."

He added he was not speaking for the company. He has not been involved in the company in more than a year and no longer serves on its board, he said.

pdanner@express-news.net

Legal Notices
To place legal notices
email legals@chron.com or call 713.224.5868.

NOTICE TO CREDITORS
NOTICE TO CREDITORS

Notice To Creditors Ad
$69.00*
+$5.00 Affidavit Fee
Call Cynthia
713-362-6435
*$69.00 includes first 36 lines
*$1.92 per line over 36 lines

BIDS & PROPOSALS

Competitive sealed proposals will be received by the Galena Park Independent School District until 2:00 p.m., Wednesday, May 8, 2013 for **BUYERAAD / VENDING AGREEMENT, GSP 13-001.** At that time proposals will be opened at the GPISD Admin Bldg located at 14705 Woodforest Blvd., Houston, TX 77015. Additional information may be obtained by contacting the Purchasing Dept at 832-284-1008 or on our website: http://galenaparkisd.com/purchasing-current bids. The Galena Park ISD reserves the right to reject any or all proposals.

FORM AL 100
Cypress-Fairbanks ISD Food Service Dept. will receive the following competitive proposals for: **Dry Grocery #13-04-3539, 1:00 PM, 4/22/13; Dairy Bread #13-04-3571, 10:00 AM 4/24/13; Bread Bid #13-04-3572BFP, 10:00 AM 4/24/13; USDA & Juice Bid #13-04-3573BFP 10:00 AM 4/24/13.** Bids 281-897-4543, 11255 Perry Rd. Houston 77064.
Cypress-Fairbanks ISD will receive proposals for **Musical Instruments & Equipment #13-04-3561, 2:00 PM 4/22/13; Event Staff Contract Labor #13-04-3570B BFP, 1:00 PM 4/25/13.** Bids 281-897-4469 12510 Windfern Rd. Houston 77066.
www.cfisd.net

Notice to Proposers
Electronic proposals will be received by Lone Star College System for:
• RFP 251 Moving Services Lone Star College System, electronic submissions due by 2:00 p.m., Friday, May 3, 2013. Contact: Cynthia Brown@lonestar.edu. Instructional Week will be held on Thursday, April 25, 2013, at 1:00 PM. Call in number 832-813-5704. Must register to bid: http://www.appsdistc.lonestar.edu/star/supplier.htm.

INVITATION TO BID
The Housing Authority of the City of Texas City will receive bids on Modernization Improvements for the Housing Authority of the City of Texas City-HUD Modernization project number **TX 24 P 032 501 11 (CFP), TX 24 P 032 501 12 (CFP) and CDBG funds,** until **1:00 p.m. on the 7th of May 2013** at the offices of the Housing Authority of the City of Texas City, 817 Second Avenue North, Texas City, Texas 77590, at which time and place all bids will be publicly opened and read aloud.
Proposed forms of Contract Documents, including plans and specifications may be examined at:
Housing Authority Office, 817 Second Avenue North Texas City, Texas 77590.
Copies of the documents may be secured by **depositing $100.00** with the Architect, SGB Architects, LLC, 1835 Airline Drive, Suite 200, Bossier City, Louisiana 71112 for each set of documents obtained. Deposit of the first two sets is fully refundable to all bonafide prime Bidders upon return of the documents, in good condition, no later than ten (10) days after receipt of bids. The deposit of all other sets of documents will be refunded 50% upon return of documents as stated above. General Contractors not submitting a bid on the project will be refunded 50% of the plan deposit upon return of bid documents within ten (10) days after receipt of bids.
A certified check or bank draft, payable to the Housing Authority of the City of Texas City, U.S. Government bonds, or a satisfactory bid bond executed by the bidders and acceptable sureties in an amount equal to five percent of the bid shall be submitted with each bid.
The successful bidder will be required to furnish and pay for a performance and payment bond equaling the contract sum issued by a Bonding Company licensed to operate in the State of Texas.
Attention is called to the provisions for equal employment opportunity and payment of not less than the minimum salaries and wages as set forth in the Specifications must be paid on this project.
No bid shall be withdrawn for a period of 10 days subsequent to the opening of bids or thirty (30) days after actual date of the opening thereof, without consent of the Housing Authority.
A **pre-bid conference** will be held at **9:00 a.m., April 25, 2013,** at the offices of the Housing Authority.
In accordance with the omnibus drug legislation enacted November 19, 1988, Drug-Free Workplace Act of 1988 (Pub. L. 100-690, Title V, Subtitle D) contractors and grantees of Federal Agencies must certify that they will provide drug-free workplaces. This required certification is a precondition of receiving a contract with the Housing Authority.
The Housing Authority of the City of Texas City reserves the right to reject any and all bids as the interest of the Housing Authority may require.
Housing Authority of the City of Texas City
By: George Fuller,
Executive Director

BIDS & PROPOSALS

INVITATION TO BID
Medical Transportation Management, Inc. is bidding on the Houston Metro **Metrolift** Minivan Transportation Services RFP. We are looking for DBEs to provide subcontracted services in relation to the provision of these services. **If your firm is either a METRO certified Small Business or TUCP certified Disadvantaged Business Enterprise, please contact** saddleman@mtm-inc.net **for further information and contracting opportunities.** Susan Addleman, Paratransit Business Manager, MTM, Inc.

Notice to Proposers
Sealed Electronic Proposals will be received by Lone Star College System for:
• RFP #247, Creative Marketing and Advertising Services for the Systems & Web2x Pre-Bid Mtg. to be held Online at 2:00pm, 4/26/2013; Electronic Bids Due by 2:00 pm, 4/29/2013. Contact: Matthew.B.Glidden@lonestar.edu. Must be Registered to Bid: http://www.appsdistc.lonestar.edu/star/supplier.htm

PASADENA INDEPENDENT SCHOOL DISTRICT
is accepting Request for Proposals on various **School Enrichment Programs.** Proposals will be received at the Central Administration Building, Purchasing Department, Attn: Bid Clerk, 1515 Cherybrook, Pasadena, Texas 77502, 713-740-0196, until **9:00 AM, Wednesday, May 1, 2013.** A public opening will be held at the above address immediately following the closing time. Plans and Specifications may also be obtained from the above address, or on our website:
http://pasadenaisd.schoolwebpages.com/education/components/scrapbook/default.php?sectionid=12&f=14334.
RFP#13-034

LEGAL NOTICES

IN THE REPUBLIC OF TRINIDAD AND TOBAGO:
IN THE HIGH COURT OF JUSTICE
SUB-REGISTRY,
SAN FERNANDO
No. CV 2012-04510
BETWEEN
BENNY SOOBEEN
1st Claimant
MICHAEL SOOBEEN
2nd Claimant
VASHTY SOOBEEN
3rd Claimant
REUBEN SOOBEEN
4th Claimant
AND
ASHOOK MAHARGOO
1st Defendant
RADHIKA MAHARGOO
2nd Defendant
LAURA KARCHAN
3rd Defendant
LASHAN JAGROO
4th Defendant
SHIVAN JAGROO
Apt. #3102, 414 Mayo Road, Houston, Texas, 77013,
United States of America.
TAKE NOTICE that an action has been filed against you by the Claimants for:
a) The Partition of All and Singular those two several pieces of land situate at Cazaux formerly in the Ward of Montserrat, but now in the Ward of Pointe-a-Pierre, in the Island of Trinidad THE FIRST THEREOF comprising FOUR ACRES, THREE RODDS AND EIGHT PERCHES and bounded on the North by lands of Gaya, on the South by lands of Ragnath, on the East by lands of Gaya, on the West by lands of Ragnauth; AND THE SECOND THEREOF comprising SIX ACRES, ONE ROOD AND TWENTY FOUR PERCHES and bounded on North by lands of Ramsaran and Gango, on the South and East by lands formerly of Dorah but now of Hardeaks and on the West by lands formerly of Bhagwanath but now of Kannan described in Deed registered as No.7954 of 1948 together with the buildings and appurtenances standing thereon (hereinafter referred to as "the said lands")
b) An injunction restraining the Third Named Defendant from building on the said lands;
c) A declaration that the Deed of Conveyance, registered as No. 2006301273230 made between the First and Third Named Defendants (annexed and attached as "A") be null and void;
d) Costs;
e) Such further and/or other relief as the nature of the case may require.
TAKE NOTICE that the above claim will be heard on the **21st day of June 2013 at 9:00 SP18** before the Honourable Madame Justice Joan Charles at the High Court of Justice, Sub-Registry, San Fernando
AND that it has been ordered that service of these proceedings be effected by this advertisement. If you desire to defend the said action you must within twenty-eight (28) days after the second publication of this advertisement enter an appearance in the High Court of Justice, Sub-Registry, San Fernando; in default of such appearance the Court may hear these proceedings in your absence.
Dated this 22nd day of March, 2013
Assistant Registrar
SAN FERNANDO
(Seal) TOOLSIE RAMDIN
Asst. Register
Supreme Court
San Fernando
For the best buys, turn to Chronicle Classifieds

LEGAL NOTICES

Dr. Michael F. Angel announces the closing of his office for the practice of medicine at 6624 Fannin St., effective April 26, 2013. Medical records will be available at his office until May 17, 2013. The phone number is 713-795-5600. Starting May 20, 2013, medical records will be available at the office of Dr. Timothy Sehorn at 6624 Fannin St. Suite 2400 starting May 20, 2013. Dr. Sehorn's office telephone number is 713-790-9151.

Notice of Public Hearing SH 99/ from Spur 10 to SH 99

The Texas Department of Transportation (TxDOT) will conduct a public hearing on the proposed widening of US 59 from Spur 10 to SH 99, in Fort Bend County, Texas. The hearing will be conducted on Thursday, May 16, 2013, in the auditorium of Terry High School, at 5500 Ave. M, Rosenberg, Texas 77471. The purpose of the hearing is to discuss the social, economic and environmental effects of the proposed project and receive comments from the public. The hearing will begin with an open house from 5:30 p.m. to 6:30 p.m. Project staff will answer questions on the proposed project during the open house. The formal public hearing will begin promptly at 6:30 p.m. followed by a public comment period.
From Spur 10 to FM 762, TxDOT proposes to widen the existing 4 lane divided highway to a 6 lane highway divided by a grassy median. This segment would also include continuous 2 lane frontage roads where they are currently discontinuous. Grade separation/interchange improvements would be performed at various intersections. From FM 762 to SH 99, the proposed project would widen the existing 4 lane divided highway to 8 general purpose lanes (4 each way), plus 2 additional high occupancy vehicle (HOV) lanes (one in each direction). Directions of travel would be separated by a concrete barrier. The segment would also include continuous 2 lane frontage roads, which are currently discontinuous 2 lane frontage roads.
The project would require approximately 54.95 acres of additional right-of-way and three commercial displacements. It would not require residential displacements. The project would increase vehicle capacity, reduce congestion, upgrade US 59 to current design and safety standards, and rectify identified operational deficiencies.
The Environmental Assessment, project exhibits, maps and design drawings will be available for review at the hearing. This information is available by appointment for review and copying at TxDOT's Houston District Office, 7600 Washington Avenue, Houston, Texas 77007, and at TxDOT's Fort Bend Area Office, 4235 SH 36, Rosenberg, Texas 77471.
All interested persons are invited to attend this hearing. Persons interested in attending the hearing that have special communication or accommodation needs are encouraged to contact the District Public Information Officer at (713) 802-5072 at least two working days before the hearing. The public hearing will be conducted in English. Requests for language interpreters or other special communication needs should be made at least two working days before the public hearing. TxDOT will make every reasonable effort to accommodate these needs. The TxDOT office is open Monday through Friday from 8:00 a.m. to 5:00 p.m., excluding state holidays.
Oral and written comments about this project may be presented at the hearing. Written statements may also be submitted to the TxDOT Houston District office at 7600 Washington Avenue, Houston, or mailed to the Director of Project Development, TxDOT Houston District, P.O. Box 1386, Houston, Texas 77251, or emailed to hou-pjoweb@txdot.gov. Comments must be postmarked or emailed by May 30, 2013 to be included in the public hearing record.

Lost pet?
PetsHouston.com can help. Submit photo, pet's name and details at
petsHouston.com

SUPPORT literacy and education.
DONATE NOW to help maintain a brain.
Readers Are Leaders
HOUSTON CHRONICLE
Chronicle In Education
Go to readersareleaders.org

HOUSTON CHRONICLE
Monday, May 06, 2013
Texas Department of Transportatio...
Advertiser: N/A
Agency: N/A
Section-Page-Zone(s): B-8-All
Description:
Ad Number: 25690171
Insertion Number: N/A
Size: 1 Col x 144 ag
Color Type: 0

Legal Notices

To place legal notices
email legals@chron.com or call 713.224.6868.

ADOPTIONS

ADOPT: A Loving Professional Couple, Stayhome mom, business man wants baby. Expenses paid 1-800-779-4813 Mary&Larry It is illegal to pay for anything beyond legal & medical expenses.

NOTICE TO CREDITORS

NOTICE TO CREDITORS
Notice is hereby given that original Letters Testamentary for the Estate of **DONALD JOE BULAREZ, Deceased,** were issued on April 19, 2013, in Cause No. PR024106, pending in the County Court at Law No. 2 and Probate Court, Brazoria County, Texas. To All Persons Interested:
All persons having claims against this Estate which is currently being administered are required to present them to the undersigned within the time and in the manner prescribed by law.
c/o **A.B. Crouch Attorney at Law 125 West Seale Alvin, Texas 77511**
DATED the first day of May, 2013.
/s/ A.B. Crouch
Attorney for
Claria Pearl BulaREZ
State Bar No. 05114800
125 West Seale
Alvin, Texas 77511
Telephone: (281) 331-6288
Facsimile: (281) 331-6344

BIDS & PROPOSALS

ADVERTISEMENT TO BIDDERS
Sealed bids, in duplicate, addressed to the Harris County Municipal Utility District No. 148, Harris County, Texas, for **Construction of the Water Sanitary Sewer, and Drainage Facilities for Silver Canyon Lakes West Section Eleven, Harris County Municipal Utility District No. 148, City of Houston, Harris County, Texas** (RMS 300 no. 8145-2782) will be received at the office of RMS Engineering, LLP, until **2:00 pm** Local Time, refundable deposit, or may be examined without charge at the offices of the Engineer, AGC, Fat Dodge, AGC of Texas and Amitex Information Services, Inc. A cashier's check or bid bond in the amount of 5% of the total amount of the bid must accompany each bid. The successful bidder must furnish a payment and performance bond acceptable to Owner. A non-mandatory pre-bid conference will be held at the office of the Engineer at the address known above at 2:00 p.m., May 13, 2013.
BID NOTICE
Harris County Department of Education (HCDE)/Choice Partners (CP), a national cooperative, will be accepting Bids/Proposals Proposals (377) for:
• RFP #: 12/00064 Energy Procurement and Management Consulting Services. Proposals are due **June 7, 2013 at 2:00 pm** CST to physical address listed below.
• RFP #12/00010 for HVAC Fleetwax (Painting, Drywall, Acoustical Ceiling, and Flooring). Proposals are due **June 7, 2013 at 2:00 pm** CST to the physical address listed below.
• RFP #12/00009 for HVAC Openings (Windows, Doors, Hardware and Related Items). Proposals are due **June 6, 2013 at 2:00 pm** CST to the physical address listed below.
• RFP #12/00008 for Solid Waste and Recycling Collection, Parts, Tires, Lot, and Related Services. Proposals are due **May 7, 2013 at 2:00 pm** CST through online at the internet.
Interested proposers may go to www.choicepartners.org and register to download the solicitation or call 713-696-1122. Proposals must be submitted to the following physical address: Attn: Bids, 6300 Irvington Blvd, Houston, TX 77022-5618. It is HCDE policy not to discriminate on the basis of race, color, national origin, gender, (limited to pregnancy), proficiency in handicapping condition in its programs.
INVITATION TO BIDDERS
Sealed bids in duplicate addressed to Brae Road Dunes Partners, a Texas Limited Partnership, Ltd. on behalf of Northwest Utility District, Owner, will be received in the office of Benchmark Engineering Corporation, 2401 Fountainview, Suite 500, Houston, Texas 77057, until 2:00 p.m., on Wednesday, May 29, 2013 at which time all bids will be opened and publicly read for the furnishing of all labor, material, equipment, tools, and supervision necessary or incidental to the "Off-site Storm Sewer, Conveyance / Detention Basin and Rough Grading for Tract 1, Tract 2 and Tract 3" (Scope of Project) a) 1,538 feet of 24"-60" storm sewer; b) 241,000 c.y. of excavation and disposal of excavated dirt (Haul distance within ½ mile); and c) with related appurtenances.
A pre-bid conference will be held in the office of Benchmark Engineering Corporation, 2401 Fountainview, Suite 500, Houston, Texas 77057, on Tuesday, May 21, 2013, at 2:00 p.m. (attendance is mandatory).
Plans, specifications and bid documents shall be purchased at Benchmark Engineering Corporation to be able to bid this project for a $100.00 non-refundable fee.
A cashier's check, certified check and/or bid bond meeting the requirements of the contract documents, in the amount of 5% of the total amount bid must accompany each bid. The successful bidder will be required to provide a performance bond and a payment bond, as provided for in the bid documents, for full amount of the contract. The Owner reserves the right to reject any or all bids. All bids received after the closing time designated will be returned unopened.
WHEREVER YOU ARE READY to place your classified ad, get the best professional assistance. Call **Chronicle Classifieds 713-224-6868.**

NOTICE TO CREDITORS

Notice To Creditors Ad $69.00*

+$5.00 Affidavit Fee
Call Cynthia
713-362-6435
***$69.00 includes first 36 lines**
***$1.92 per line over 36 lines**

BIDS & PROPOSALS

Aldine ISD is accepting sealed bids for general contractor, mechanical and electrical sub-contractors for duct collection systems at various schools until 5/21/13 at 2:00 pm at the Aldine ISD Admin. board room 14910 Aldine Westfield Rd., Houston, TX 77032.
If the District determines that there are an insufficient number of bidders, then the bid date may be extended by at least three (3) days. Aldine ISD reserves the right to accept or reject any/or all bids or to make any/all changes as they appear to be advantageous to the district and to waive any and all informalities, for information, plans and specifications, call 281-985-6275. A pre-bid conference will be held 5/8/13 at 9:00 am, starting at Aldine Middle School, 14900 Aldine Westfield Rd., Houston, TX 77032.
INVITATION TO BIDDERS
Sealed Bids, in duplicate, addressed to Fort Bend County Municipal Utility District No. 38, Attention Linda Yorkaw, President, Board of Directors, will be received at the office of the District's Engineer, J.K. Costanza & Associates Engineering, Inc., 4301 Center Street, Deer Park, Texas 77536, until 2:00 p.m., Local Time, Tuesday, May 21, 2013, and then publicly opened and read for **Water Improvements for Phase 2 Detention Pond Grand View,** Fort Bend County, Texas. Scope of Work of the Contract includes excavation of future detention ponds, placing fill on future development area, and related improvements.
Bids received after the closing time will be returned unopened. A NON-MANDATORY pre-bid conference will be held on May 15, 2013 at 10:00 a.m., Local Time, at the project site located on Crescent Street, 1 mile west of I-69, Exit 126 (Rampart Rd.). Bids must be accompanied by a bid bond or a certified check or a cashier's check, acceptable to the Owner, in an amount not less than 5 percent of the total amount bid, as a guarantee that the successful bidder will enter into the Contract and secure the Bonds on the forms presented and provide the required insurance certificates within 7 days after the date Contract Documents are received by the Contractor. Copies of the bidding documents are on file at the office of the District's Engineer and are posted at ed@bgfl (AGC Houston) and AGC of Texas for one (1) set. Bidding Documents may be obtained at the office of the District's Engineer by prospective bidders or suppliers upon payment of Fifty Dollars ($50.00) non-refundable cost, for each set of documents. The Owner reserves the right to reject any or all Bids, and to waive all defects and irregularities in bidding or bidding procedure except time of submitting a Bid. The Successful Bidder, if any, will be the responsible Bidder whose bid, which in the Board's judgment will be the most advantageous to the District taking into account the most economical combination of the Project.
LEGAL NOTICE
SEALED BIDS ADDRESSED TO THE CITY SECRETARY OF THE CITY OF JACINTO CITY WILL BE RECEIVED "SEALED BID" AND FOR THE VEHICLE BIDS WILL BE RECEIVED AT THE JACINTO CITY CITY HALL, 1301 MONCRIEF RD, JACINTO CITY, TEXAS ON THE 14TH DAY OF MAY, 2013 FOR THE SALE OF (2) 2003 FORDS MAY BE VIEWED AT PUBLIC WORKS, 12300 LA PORTE ST. AND THE PICKUP MAY BE VIEWED AT PUBLIC WORKS, 12300 LA PORTE ST.
BIDS WILL BE OPENED AND PUBLICLY READ IN THE COUNCIL CHAMBER, 1301 MONCRIEF ON THE REGULAR COUNCIL MEETING DATE. BIDS MUST BE RECEIVED BY 2:00 PM, MAY 13, 2013.
THE CITY RESERVES THE RIGHT TO REJECT ANY AND/OR ALL BIDS, TO WAIVE ANY/OR ALL TECHNICALITIES AND TO ACCEPT ANY BID OR PART THEREOF, WHICH IN THE OPINION OF THE CITY COUNCIL IS MOST ADVANTAGEOUS TO THE CITY.

BIDS & PROPOSALS

INVITATION TO BIDDERS
Sealed Bids, in duplicate, addressed to Brae Road Dunes Partners, Ltd. on behalf of Northwest Utility District, Owner, will be received in the office of Benchmark Engineering Corporation, 2401 Fountainview, Suite 500, Houston, Texas 77057, until 2:00 p.m., Wednesday, May 29, 2013, at which time all bids will be opened and publicly read for the furnishing of all labor, material, equipment, tools, and supervision necessary or incidental to the "Off-site Storm Sewer, Conveyance / Detention Basin and Rough Grading for Tract 1, Tract 2 and Tract 3" (Scope of Project) a) 1,538 feet of 24"-60" storm sewer; b) 241,000 c.y. of excavation and disposal of excavated dirt (Haul distance within ½ mile); and c) with related appurtenances.
A pre-bid conference will be held in the office of Benchmark Engineering Corporation, 2401 Fountainview, Suite 500, Houston, Texas 77057, on Tuesday, May 21, 2013, at 2:00 p.m. (attendance is mandatory).
Plans, specifications and bid documents shall be purchased at Benchmark Engineering Corporation to be able to bid this project for a $100.00 non-refundable fee.
A cashier's check, certified check and/or bid bond meeting the requirements of the contract documents, in the amount of 5% of the total amount bid must accompany each bid. The successful bidder will be required to provide a performance bond and a payment bond, as provided for in the bid documents, for full amount of the contract. The Owner reserves the right to reject any or all bids. All bids received after the closing time designated will be returned unopened.
The best ad advice, the right price. Chronicle Classifieds 713-224-6868.

BIDS & PROPOSALS

INVITATION TO BIDDERS
Sealed Bids, in duplicate, addressed to Fort Bend County Municipal Utility District No. 2, Attention Linda Yorkaw, President, Board of Directors, will be received at the office of the District's Engineer, J.K. Costanza & Associates Engineering, Inc., 4301 Center Street, Deer Park, Texas 77536, until 2:00 p.m., Local Time, Tuesday, May 21, 2013, and then publicly opened and read for **Water Improvements for Phase 2 Detention Pond Grand View,** Fort Bend County, Texas. Scope of Work of the Contract includes excavation of future detention ponds, placing fill on future development area, and related improvements.
Bids received after the closing time will be returned unopened. A NON-MANDATORY pre-bid conference will be held on May 15, 2013 at 10:00 a.m., Local Time, at the project site located on Crescent Street, 1 mile west of I-69, Exit 126 (Rampart Rd.). Bids must be accompanied by a bid bond or a certified check or a cashier's check, acceptable to the Owner, in an amount not less than 5 percent of the total amount bid, as a guarantee that the successful bidder will enter into the Contract and secure the Bonds on the forms presented and provide the required insurance certificates within 7 days after the date Contract Documents are received by the Contractor. Copies of the bidding documents are on file at the office of the District's Engineer and are posted at ed@bgfl (AGC Houston) and AGC of Texas for one (1) set. Bidding Documents may be obtained at the office of the District's Engineer by prospective bidders or suppliers upon payment of Fifty Dollars ($50.00) non-refundable cost, for each set of documents. The Owner reserves the right to reject any or all Bids, and to waive all defects and irregularities in bidding or bidding procedure except time of submitting a Bid. The Successful Bidder, if any, will be the responsible Bidder whose bid, which in the Board's judgment will be the most advantageous to the District taking into account the most economical combination of the Project.

BIDS & PROPOSALS

Harmony Public Schools, open enrollment charter schools and the National School Lunch Program, Harmony Public Schools provide breakfast and lunch at no charge to students. Interested parties may obtain a copy of the Request for Proposal (RFP) package from the Purchasing Department, located at the Central Office 7322 West Sam Houston Parkway South, Houston, TX 77095. Proposals must be received by 4 pm, May 14, 2013. Harmony Public Schools reserves right to reject any and all proposals. For further information, please contact Mr. Yusuf Ghazal at ycharaz@harmonyschools.org
NOTICE OF REQUEST FOR PROPOSAL
INTERGRATED CARE PH II THE HOMELESS HOUSELESS INITIATIVE
The City of Houston Department of Health and Human Services is requesting proposals that will result in a contract award for Integrated Care for the Homeless Housing Initiative. The proposals are solicited for this project in accordance with the terms, conditions and instructions as set forth in this Request for Proposal (hereinafter "RFP").
This RFP is available on the Internet at the following site:
http://www.houstontx.gov/health/Rfp-Info.htm
It is also available at the Department of Health and Human Services, 8000 N. Stadium Drive, 8th Floor, Houston, TX 77054 during the hours of 8:00 a.m.-5:00 p.m.
The City of Houston, Texas will receive submissions at the City's Purchasing Office, City Hall Annex, Public Level, 900 Bagby, Houston, Texas 77002 until **Friday, June 7, 2013 at 2:00 p.m.**
Questions concerning the RFP will be accepted only during the **Pre-Proposal Conference on Thursday, May 22, 2013 at 2:00 p.m. at Aldis Smith Building, 1st Floor Conference Room, Houston, Texas 77054.**
All submissions will be required to comply with City Council Ordinance No. 78-1538, passed August 9, 1978, relating to Equal Employment Opportunity Compliance. The City reserves the right to reject and/or waive any informalities of a submission deemed to be in the City's best interest.
Notice to Proposers
Sealed electronic proposals will be received by Lone Star College System at:
LCSP 265 Construction Related to Elevator Installation (SC-Montgomery Campus, electronic bids due by 2:00 pm, Tuesday, 06/04/13. MANDATORY Pre-Bid Conference and Site Visit, Tuesday, 05/21/2013 at 9:00 a.m. Montgomery Campus, 1200 College Park Dr. 2121 Conroe, Texas, 77384, Bldg. I, Room I114. Contact: Kimberly A. Burhman@lonestar.edu. Must Register to Bid. http://www.pbsrade.com/bid/listing/supplier.htm

LEGAL NOTICES

NOTICE AFFORDING OPPORTUNITY FOR PUBLIC HEARING FM 1960 ROADWAY WIDENING
The Texas Department of Transportation (TxDOT) proposes to widen FM 1960 from Hwy 59 to FM 336 in Conroe, Montgomery County, Texas. The proposed project would widen FM 1960 to a four lane, divided facility between IH 45 and Loop 336 and enhance the existing at grade crossing with an overpass. Right of way would be required for the proposed project.
Maps showing the project location and design, a categorical exclusion determination (CED) document, construction schedules, and other information related to the project are on file and available for inspection at the TxDOT Montgomery Area Office at 902 North IH 45 East, Conroe, Texas 77301 and at the TxDOT Houston District Office at 7600 Washington Avenue, Houston, Texas 77007. The TxDOT District Office is open Monday through Friday, from 8:00 AM to 5:00 p.m. excluding state holidays.
All interested persons are invited to attend a public hearing to be held covering the social, economic and environmental effects of the proposed project and matters pertinent to the location and design of the project. Oral or written comments will be required to be presented at the Public Hearing. Written statements may also be submitted to the TxDOT Houston District Office, 7600 Washington Avenue, Houston, or addressed to the Director of Project Development, TxDOT Houston District, P.O. Box 1386, Houston, Texas 77251, or delivered to the District Office, Attn: Project Development, TxDOT Houston District, P.O. Box 1386, Houston, Texas 77251, or emailed to houpublicmail@dot.state.tx.us. Comments must be received within 20 days after the public hearing.
The City will send notice of public hearing with variance to owners of property within the 250 feet of the boundary of the plat and send notices along or across from the street or private roadway extending 500 feet from the plat as measured along the centerline of any street or private roadway that abuts the boundary of the plat. Slate law allows for preliminary approval of a plat that requires a variance without holding a public hearing if the plat is within 200 feet of a legal protest the request, approval of the request requires an affirmative vote of at least three-fourth (3/4) of the members present. In computing the percentage of land area required to concur in the protest, streets and alleys are included.
You may speak on this request at the public hearing on May 23, 2013 at 2:30 p.m., City Council Chamber, City Hall Annex, Public Level, 900 Bagby. Contact Mary Lou Henry at 713-224-3027 for information.
RESULTS you can count on from Houston's classified leader.
Chronicle Classifieds 713-224-6868.

View legal notices at chron.com/legals

LEGAL NOTICES

NOTICE OF RESULTS OF PUBLIC HEARING
DEPARTMENT OF NEIGHBORHOODS
CITY OF HOUSTON
INSPECTIONS & PUBLIC SERVICE
BUILDING AND STANDARDS COMMISSION

On Wednesday, May 1, 2013, a public hearing was held before the **Building and Standards Commission** pursuant to Articles V of Chapter 54 of the Tex. Loc. Gov't Code and Chapter 10 of the Code of Ordinances, Houston, Texas. Based upon the evidence presented, the Commission entered the following final findings as property located at:

4211 McKinney St., Main Structure - (Lot 14, in Block 8 of Somerville Center, in Harris County, Texas, according to the map or plat thereof recorded in Volume 11, Page 46 of the Map Records of Harris County, Texas.) - An order was issued requiring the owner/lien holder to obtain permits, secure the building in accordance with Building Official's specifications, and complete repairs or demolition of this structure within Forty-five (45) days in accordance with Dangerous Building Requirements of Chapter 10 of the City of Houston Code of Ordinances from the date of this order, and a civil penalty was issued for $4,000.00 for ordinance violations.

4211 Wipprecht St. - Pool House Garage - (Lot 13, in Block 8 of Somerville Center, in Harris County, Texas, according to the map or plat thereof recorded in Volume 11, Page 46 of the Map Records of Harris County, Texas.) - An order was issued requiring the owner/lien holder to obtain a permit, and complete repairs or demolition of this structure within Ninety (90) days in accordance with Dangerous Building Requirements of Chapter 10 of the City of Houston Code of Ordinances from the date of this order.

7811 Rosedale St. - Detached Garage - (Lot 13, in Block 4 of Oak Manor Section 1, an addition in Harris County, Texas, according to the map or plat thereof recorded in Volume 14, Page 34 of the Map Records of Harris County, Texas.) - An order was issued requiring the owner/lien holder to obtain a permit, and complete repairs or demolition of this structure within Ninety (90) days in accordance with Dangerous Building Requirements of Chapter 10 of the City of Houston Code of Ordinances from the date of this order.

7811 Spedding Dr. - (Lot Twenty-four (24), in Block Thirteen (13) of Braeburn Glen Sec. 3, an addition in Harris County, Texas, according to the map or plat thereof recorded in Volume 16, Page 41 of the Map Records of Harris County, Texas.) - An order was issued requiring the owner/lien holder to obtain a permit, and complete repairs or demolition of this structure within Forty-five (45) days in accordance with Dangerous Building Requirements of Chapter 10 of the City of Houston Code of Ordinances from the date of this order, and a civil penalty was issued for $2,000.00 for ordinance violations.

4417 Wipprecht St. - Main Structure & Pool Hut - (Lot 13B, in Block 8 of Somerville Center, in Harris County, Texas, according to the map or plat thereof recorded in Volume 14, Page 39 of the Map Records of Harris County, Texas.) - An order was issued requiring the owner/lien holder to obtain a permit, and complete repairs or demolition of this structure within Forty-five (45) days in accordance with Dangerous Building Requirements of Chapter 10 of the City of Houston Code of Ordinances from the date of this order.

7814 Arbel Ln. - (Lot 245, in Block F of Carverdale Section 1, an addition in Harris County, Texas, according to the map or plat thereof recorded in Volume 34, Page 44 of the Map Records of Harris County, Texas.) - An order was issued requiring the owner/lien holder to obtain a permit, and complete repairs or demolition of this structure within Forty-five (45) days in accordance with the Building Official's specifications, and complete repairs or demolition of this structure within Forty-five (45) days in accordance with Dangerous Building Requirements of Chapter 10 of the City of Houston Code of Ordinances from the date of this order, and a civil penalty was issued for $4,000.00 for ordinance violations.

301 Paul St. - Detached Garage - (Lots 214 and 215, in Block F of Central Gardens, an addition in Harris County, Texas, according to the map or plat thereof recorded in Volume 15, Page 1 of the Map Records of Harris County, Texas.)

111 E. 9th St. - (Lot Five (5) in Block Fifty-seven (57) of The School Addition to Houston, an addition in Harris County, Texas, according to the map or plat thereof recorded in Volume 1, Page 718 of the Map Records of Harris County, Texas.) - An order was issued requiring the owner/lien holder to obtain permits, secure the building in accordance with the Building Official's specifications, and complete repairs or demolition of this structure within Forty-five (45) days in accordance with Dangerous Building Requirements of Chapter 10 of the City of Houston Code of Ordinances from the date of this order, and a civil penalty was issued for $2,000.00 for ordinance violations.

6231 Brockton St. Rear - (Southeasterly 75 feet by 125 feet of Tract Four (4), in Block Three (3) of Acre Villa Subdivision of Park Place, an addition in Harris County, Texas, according to the map or plat thereof recorded in Volume 6, Page 27 of the Map Records of Harris County, Texas. **Being more particularly described in instrument** recorded under **Clerk's File Number N-** 003033 of the Real Property Records in Harris County, Texas.) - An order was issued requiring the owner/lien holder to obtain permits, secure the building in accordance with the Building Official's specifications, and complete repairs or demolition of this structure within Forty-five (45) days in accordance with Dangerous Building Requirements of Chapter 10 of the City of Houston Code of Ordinances from the date of this order, and a civil penalty was issued for $2,000.00 for ordinance violations.

4141 Easter St. - Main Structure - (Lot 4, in Block 97 of Augusta Place, in Harris County, Texas, according to the map or plat thereof recorded in Volume 56, Page 139 of the Deed Records of Harris County, Texas.) - An order was issued requiring the owner/lien holder to obtain permits, secure the building in accordance with the Building Official's specifications, and complete repairs or demolition of this structure within Forty-five (45) days in accordance with Dangerous Building Requirements of Chapter 10 of the City of Houston Code of Ordinances from the date of this order, and a civil penalty was issued for $1,000.00 for ordinance violations.

ALL ORDERS ARE RECORDED IN THE PROPERTY RECORDS IN THE COUNTY CLERK'S OFFICE IN THE COUNTY IN WHICH THE PROPERTY IS LOCATED. COMPLETE COPIES MAY BE OBTAINED THROUGH THAT OFFICE.

NOTICE OF PUBLIC HEARING

City of Houston
Inspections and Public Service Division
DEPARTMENT OF NEIGHBORHOODS
May 31, 2013 @ 9:00 A.M.
7125 Ardmore Street, 1st Floor
Houston, Texas 77054

The City of Houston Hearing Officer will hear testimony and review evidence for the following properties located in Harris County, Texas (unless otherwise indicated) at 9:00 am:

5501 Admiralty Rd., Detached Garage - (Lot 2 and the adjoining West half of Lot 4, in Block 21 of Forest Oaks, an addition in Harris County, Texas, according to the map or plat thereof recorded in Volume 5, Page 20 of the Map Records of Harris County, Texas.) **Also known as** 1613 Waco St. & 1618 Waco St. a/k/a 1620 Waco - (Lots One (1) and Two (2), in Block Four (4) of Burke Addition, an addition in Harris County, Texas, according to the map or plat thereof recorded in Volume 97, Page 13 of the Deed Records of Harris County, Texas, save and except 1.796 square feet taken out of and of Lot 1, Block 1 of Burke Addition, conveyed to the City of Houston by deed recorded in Volume 7, Page 86 of the Deed Records of Harris County, Texas.)

3614 Mars St. - (The South one-half of Lots 21 and 22, in Block 2 of J.M. Phelps & Bailey's Addition, an addition in Harris County, Texas, according to the map or plat thereof recorded in Volume 154, Page 494 of the Deed Records of Harris County, Texas.)

5422 Castlecrest Ln. - (Lot Twenty-two (22), in Block One (1) of Ruth & Ellen Addition, an addition in Harris County, Texas, according to the map or plat thereof recorded in Volume 16, Page 2 of the Plat Records of Fort Bend County, Texas.)

At this hearing the Building Official or the Director of Neighborhoods Public Service Division or the Neighborhood Protection Official or their designees will present their findings concerning the condition of the above-referenced properties. Persons may appear before the Hearing Officer under in support of, or in response to, a code violation notice issued by the Building Official or the Neighborhood Protection Official designee. The owner or anyone having an interest in the property should arrive forty-five (45) minutes prior to the above scheduled hearing time to allow for sufficient time for the hearing officer to review the case file. The owner, lessee, occupant, lienholder, or anyone having an interest in the property, will be given an opportunity to produce evidence and witnesses in his defense. After all evidence and testimony has been presented the hearing officer has the authority to issue orders for abatement of dangerous buildings or substandard buildings, as provided in Section 54.036 of the Local Code relative to dangerous, minimum building standards, and nuisance violations.

All notices are recorded in the Real Property Records in the county in which the property is located. Complete copies may be obtained through that office.

PROFESSIONAL ASSISTANCE, expert advice for all your Classified needs. Call **Chronicle Classifieds at 713-224-6868** and request help to write an ad that gets great results!

LEGAL NOTICES

CAUSE NUMBER: 2012-61121
IN THE 129TH JUDICIAL DISTRICT COURT OF HARRIS COUNTY, TEXAS
Plaintiff:
West America Bank LLC,
Defendant: Arena Barbee LLC, Barbee TT Lab
CITATION BY PUBLICATION
THE STATE OF TEXAS
County of Harris
To: Simon Yi Lab
3103 LAE HERDEY COMMANGED to be and appear before the **129th Judicial District Court** of Harris County, Texas in the Courthouse in the City of Houston, Texas at or before 10:00 o'clock a.m. Monday the **10th day of June, 2013,** being the Monday next after the expiration date of forty-two days after this citation is issued, and you are commanded and required then and there to answer the petition of the plaintiff, filed in said Court on the 5th day of September, 2012, in a suit numbered **2012-61121.** The nature of said suit is: **Bank,** is the Plaintiff and **Arena Barbee LLC, Barbee and Simon Yi Lab** is the Defendant(s). The nature of plaintiff's demand and the said petition alleging: Breach of Contract.
Plaintiff's suit is a breach of contract action and seeks a money judgment. Plaintiff's suit is for a money recovery on attorney's fees and for the enforcement of a written agreement with the Client who signed this citation by 10:00 a.m. on the Monday next after the expiration of 42 days from the date of issuance of this citation and caused citation to be served. Default judgment may be taken against you.
Notice hereof shall be given by publishing this citation once a week for four consecutive weeks in some newspaper published in Harris County, if there be a newspaper published, and this citation shall be served on the 4th day of June, 2013, which is forty-two days after the date it is issued, and the first publication of this citation shall be at least twenty-eight days before said return day.
HEREIN FAIL NOT, but have before said court on said return day this publication with your return thereon showing how you have executed the same.
WITNESS: Chris Daniel, District Clerk, Harris County, Texas.
GIVEN UNDER MY HAND AND SEAL OF SAID COURT at Houston, Texas, this **23rd day of April, 2013.** (SEAL)
Chris Daniel
District Clerk
Harris County, Texas
Houston Chronicle
Publication Office
2401 Caroline
Houston, Texas 77002
PO Box 4651
Houston, Texas 77210
Deputy District Clerk
Houston Chronicle
newspaper:
Houston Chronicle
(Submit on Request of Pascal Arizaga
Attorney at Law
Publication 10 Day, Three Allen Center, 29th Floor
Houston, Texas 77002
Bar Number: 24046838

The Houston Planning Commission has received an application to allow the replatting of Retreat Addendum, Reserve A, Vol. 6, Pg. 14 of the Harris County Map Records for the purpose of creating one single family lot. The Commission will hold an open Monday through Friday session from 8:00 a.m. to 5:00 p.m. excluding state holidays.
Oral and written comments about this proposed plat may be presented at the hearing. Written statements may also be submitted to the TxDOT Houston District Office, 7600 Washington Avenue, Houston, or addressed to the Director of Project Development, TxDOT Houston District, P.O. Box 1386, Houston, Texas 77251, or delivered to the District Office, Attn: Project Development, TxDOT Houston District, P.O. Box 1386, Houston, Texas 77251, or emailed to houpublicmail@dot.gov. Comments must be received within 20 days after the public hearing.
The City will send notice of public hearing with variance to owners of property within the 250 feet of the boundary of the plat and send notices along or across from the street or private roadway extending 500 feet from the plat as measured along the centerline of any street or private roadway that abuts the boundary of the plat. Slate law allows for preliminary approval of a plat that requires a variance without holding a public hearing if the plat is within 200 feet of a legal protest the request, approval of the request requires an affirmative vote of at least three-fourth (3/4) of the members present. In computing the percentage of land area required to concur in the protest, streets and alleys are included.
You may speak on this request at the public hearing on May 23, 2013 at 2:30 p.m., City Council Chamber, City Hall Annex, Public Level, 900 Bagby. Contact Mary Lou Henry at 713-224-3027 for information.

LEGAL NOTICES

CAUSE NUMBER: 2011-62166
IN THE 113th JUDICIAL DISTRICT COURT OF HARRIS COUNTY, TEXAS
ROBERT LEE CUELLAR AND CAROLINA LOPEZ
Plaintiff:
Defendant: NATHANIEL LEE MENCHIE
CITATION BY PUBLICATION
THE STATE OF TEXAS
County of Harris
To: NATHANIEL LEE MENCHIE
WHERE ADDRESSES AND WHEREABOUTS ARE UNKNOWN
YOU ARE HEREBY COMMANDED to be and appear before the 113th Judicial District Court of Harris County, Texas in the City of Houston, Texas at or before 10:00 o'clock **A.M. MAY, 2013,** and required then and there to answer the petition filed in said Court on the **31st day of AUGUST 2011** in a suit numbered: **2011-62166** styled: **ROBERT LEE CUELLAR AND CAROLINA LOPEZ** Plaintiff(s), **NATHANIEL LEE MENCHIE.** The nature of the plaintiff's demand and the said petition alleging PERSONAL INJURY.
SUMMARY
On August 23, 2010, ELIAS CUELLAR and CAROLINA LOPEZ suffered injuries to their minor child, Jesus Nathaniel Lee Menchie when the Elias Cuellar and Carolina Lopez's vehicle was being struck by them from the left lane as the Elias Cuellar and Carolina Lopez's were making a left hand turn in the left hand lane in their direction of traffic. The Cuellar and Elias Cuellar and Carolina Lopez relates to their injuries and vehicle. The collision occurred in Harris County, Texas.
HEREIN FAIL NOT and have before said court on said return day this writ with your return thereon, showing how you have executed same.
WITNESS: Chris Daniel, District Clerk,
Harris County Texas
GIVEN UNDER MY HAND and seal of said court at Houston, Texas this 4th day of APRIL, 2013.
(Seal)
Chris Daniel, District Clerk
Harris County, Texas
201 Caroline
Houston, Texas 77002
P.O. Box 4651
Houston, Texas 77210
By: /s/
Bernadine H. Wilrich, Deputy District Clerk
Newspaper:
HOUSTON CHRONICLE
Issued at the request of:
KEVIN WRIGHT
Address: 125 VALE ST
Houston, TX 77007
(713) 526-6600
Bar Number: 24066698
Chronicle Classifieds 713-224-6868

LEGAL NOTICES

NOTICE OF PUBLIC AUCTIONS OF PERSONAL PROPERTY AT DALLAS COUNTY, TEXAS
RALPH S. JANVEY, in his capacity as the Court-appointed receiver for Stanford International Bank, Ltd. (SIBL), et al., in Case No. 3:09-CV-0298-N, pending in the United States District Court for the Northern District of Texas, Dallas Division, hereby notes, pursuant to 28 U.S.C. §§ 2001, 2002 and 2004, this notice of his intention to sell to the highest qualified bidder(s) certain personal property located at 1519 Slocum St., Dallas, Dallas County, TX 75207, including a Dale Chihuly chandelier and Terrance Main sculpture (collectively, the "Personal Property").
All interested and qualified bidders are invited to attend and bid at the auctions. The Personal Property is owned by the Receiver in his capacity as Receiver for Stanford Alan Stanford and affiliated companies. The Personal Property will be sold without recourse to R. Allen Stanford, any affiliated entity or the Stanford Financial Group. Receiver's interest, whether the Receiver has any of his representations related to any responsibility or liability, if any, shall be limited to cash, check, or certified funds in accordance with the auction terms and conditions.
The Receiver reserves the right to postpone or adjourn the auctions, to accept any bid or to reject any bid, and to deem the bidders not to be the winners of the auctions, to cancel, or to withdraw any of the personal property at any time prior to the sale. Upon the completion of any of the auctions, in accordance with the Receiver's agreement with the auctioneer.
For additional information, including descriptions of the Personal Property, please contact Heritage Auctions at (800) 872-4487.

LEGAL NOTICES

CAUSE NUMBER: 2011-62166
IN THE 113th JUDICIAL DISTRICT COURT OF HARRIS COUNTY, TEXAS
ROBERT LEE CUELLAR AND CAROLINA LOPEZ
Plaintiff:
Defendant: NATHANIEL LEE MENCHIE
CITATION BY PUBLICATION
THE STATE OF TEXAS
County of Harris
To: NATHANIEL LEE MENCHIE
WHERE ADDRESSES AND WHEREABOUTS ARE UNKNOWN
YOU ARE HEREBY COMMANDED to be and appear before the 113th Judicial District Court of Harris County, Texas in the City of Houston, Texas at or before 10:00 o'clock **A.M. MAY, 2013,** and required then and there to answer the petition filed in said Court on the **31st day of AUGUST 2011** in a suit numbered: **2011-62166** styled: **ROBERT LEE CUELLAR AND CAROLINA LOPEZ** Plaintiff(s), **NATHANIEL LEE MENCHIE.** The nature of the plaintiff's demand and the said petition alleging PERSONAL INJURY.
SUMMARY
On August 23, 2010, ELIAS CUELLAR and CAROLINA LOPEZ suffered injuries to their minor child, Jesus Nathaniel Lee Menchie when the Elias Cuellar and Carolina Lopez's vehicle was being struck by them from the left lane as the Elias Cuellar and Carolina Lopez's were making a left hand turn in the left hand lane in their direction of traffic. The Cuellar and Elias Cuellar and Carolina Lopez relates to their injuries and vehicle. The collision occurred in Harris County, Texas.
HEREIN FAIL NOT and have before said court on said return day this writ with your return thereon, showing how you have executed same.
WITNESS: Chris Daniel, District Clerk,
Harris County Texas
GIVEN UNDER MY HAND and seal of said court at Houston, Texas this 4th day of APRIL, 2013.
(Seal)
Chris Daniel, District Clerk
Harris County, Texas
201 Caroline
Houston, Texas 77002
P.O. Box 4651
Houston, Texas 77210
By: /s/
Bernadine H. Wilrich, Deputy District Clerk
Newspaper:
HOUSTON CHRONICLE
Issued at the request of:
KEVIN WRIGHT
Address: 125 VALE ST
Houston, TX 77007
(713) 526-6600
Bar Number: 24066698
Chronicle Classifieds 713-224-6868

SUPPORT literacy and education.
DONATE NOW to help maintain a brain.
Houston Chronicle Readers Are Leaders FOUNDATION
Supporting literacy. The high literacy foundation.
Put some sponge in learning
MAINTAIN A BRAIN. Please donate now to support literacy and education programs in our community. You can build strong foundations for successful futures – just go to www.readersareleadersfoundation.org.
Readers Are Leaders FOUNDATION
Supporting literacy. The high literacy foundation.
HOUSTON CHRONICLE Chronicle In Education
chron.com/cie

HEARST media services
Strategic marketing made simple.

To place a legal notice e-mail legals@chron.com

4-16

Berg-Oliver Associates

PUBLISHER'S AFFIDAVIT

Public Hearing

THE STATE OF TEXAS §
COUNTY OF FORT BEND §

Before me, the undersigned authority, on this day personally appeared Stan Woody who being by me duly sworn, deposes and says that he is the Publisher of *Fort Bend Herald* and that said newspaper meets the requirements of Section 2051.044 of the Texas Government Code, to wit:

1. it devotes not less than twenty-five percent (25%) of its total column lineage to general interest items;

(CLIPPING) (S)
on Back

2. it is published at least once each week;

3. it is entered as second-class postal matter in the county where it is published; and

4. it has been published regularly and continuously since 1959.

5. it is generally circulated within Fort Bend County.

Publisher further deposes and says that the attached notice was published in said newspaper on the following date(s) to wit:

4-16

_____, A.D. 2013

_____
Stan Woody
Publisher

SUBSCRIBED AND SWORN BEFORE ME by Stan Woody who

X a) is personally known to me, or

_____ b) provided the following evidence to establish his/her identity, _____

on this the 30th day of April, A.D. 2013
to certify which witness my hand and seal of office.

Vanessa L. Muniz
Notary Public, State of Texas

VANESSA L. MUNIZ
Notary Public, State of Texas
My Commission Expires
January 19, 2016

DRIVERS - QUALITY Carriers hiring O/Os and C/Ds. Great pay, excellent home-time, benefits available. Tanker experience preferred. HazMat required. L/P available in some locations. Contact Sue: 1-888-804-2107 www.Work4QC.com

DRIVERS- STUDENTS 18-days from start to finish. Earn your CDL-A. No out-of-pocket tuition cost. Step up to a new career with FFE. www.driveffe.com, 1-855-356-7122

than dial-up.)Starting at $49.95/month, Call now and go fast! 1-888-643-6102

MISCELLANEOUS

SAWMILLS FROM ONLY $3,997. Make and save money with your own bandmill. Cut lumber any dimension. In stock ready to ship. Free information/DVD, www.NorwoodSawmills.com 1-800-578-1363 Ext. 300N

98 Newspapers, 263,811 Circulation
South Region Only $230
101 Newspapers, 366,726 Circulation
West Region Only $230
102 Newspapers, 311,881 Circulation
To Order: Call this Newspaper direct, or call Texas Press Service at 1-800-749-4793 Today!

NOTICE: While most advertisers are reputable, we cannot guarantee products or services advertised. We urge readers to use caution and when in doubt, contact the Texas Attorney General at 1-800-621-0508 or the Federal Trade Commission at 1-877-FTC-HELP. The FTC web site is www.ftc.gov/bizop

Extend your advertising reach with TexSCAN, your Statewide Classified Ad Network.

705 UNFURN APART.

PUBLISHERS NOTICE:
All Real estate advertising in this newspaper is subject to the Fair Housing Act which makes it illegal to advertise "any preference, limitation or discrimination based on race, color, religion, sex, handicap, familial status or national origin, or an intention, to make any such preference, limitation or discrimination."
Familial status includes children under the age of 18 living with parents or legal custodians, pregnant women and people securing custody of children under 18.
This newspaper will not knowingly accept any advertising for real estate which is in violation of the law. Our readers are hereby informed that all dwellings advertised in this newspaper are available on an equal opportunity basis. To complain of discrimination call HUD toll-free at 1-800-669-9777. The toll-free telephone number for the hearing impaired is 1-800-927-9275.

710 DUPLEXES

Rosenberg Duplex
1910 Louise St. 3Bdrm. 2 bth $725 + dep. W/ shelter **832-353-6875**

720 HOUSES

THE GROVE: 3/2/2
$1100/mo +$1100/dep No Pets Pref., No Sect. 8. Call Kent **713-907-1971**

NEEDVILLE 3/2/2
Nice, Brick, FP, Near Elem. School, $1200 **281-948-2136**

735 OFFICE-WAREHOUSE

750 COMMERCIAL

Commercial Property For Rent 550 SQFT.
Perfect for office space $500/mo + dep. 3330 Terry St.,Needville.
Commercial Property For Rent 1600 SQFT.
Mostly Open, Parking space. $1000/mo + dep 9234 Line St. Needville
832-595-4490

760 STALLS PASTURE

HORSE STALLS
Available. Turn out pasture, round pen. Private barn, owners on property. FM 723 near FM 1093 area. Please text or leave a message at:
832-586-5047

800 ACREAGE

Needville-2.28 Acres
Great Location!!!! 1-BLK off HWY 36. Commercial or Residential. All Utilities. Financing Available. 223' X 415'. Broker:
713-858-1113

815 MOBILE HOMES

1998 SUNSHINE Mobile Home
Boling area. 16X76 with deck and wheelchair ramp, new A/C & WH. Full kitchen and laundry and much furniture. $13,000
979-533-2052

★★★★★★
MOBILE HOME CITY
1226 HWY 90-A
WE HAVE IN HOUSE
FINANCING AVAILABLE
On Refurbished Repos.. Singles & Doubles Avail.. Fifty To Choose From.
Make The Call Today!!!
281-342-3335
(Se Habla Espanol)
Complete Parts Store Avail. RBI 34120

930 LEGAL NOTICES

INVITATION TO BIDDERS
Sealed Bids, in duplicate, addressed to Fort Bend County Municipal Utility District No. 151, Attention Mr. Stephen Swindell, President, Board of Directors, will be received at the office of Jones & Carter, Inc., 6335 Gulfton, Houston, Texas 77081 until 10:00 a.m. Local Time, Tuesday, May 7, 2013, and then publicly opened and read for "Water, Sanitary, and Drainage Facilities for Firethorne Section 27 in Fort Bend County, Texas"
Scope of Work of the Contract includes the construction of approximately 1,850 linear feet of 8-inch waterline, 1,563 linear feet of 8-inch sanitary, and 1,250 linear feet of 24-inch RCP storm sewer.
Bids received after the closing time will be returned unopened.
A pre-bid conference will be held on Tuesday, April 30, 2013, at 10:00 a.m. Local Time, at the office of Jones & Carter, Inc., 6335 Gulfton, Houston, Texas 77081. Attendance is not mandatory.
Each Bid must be accompanied by a bid bond or a certified or cashier's check, acceptable to the Owner, in an amount not less than 5 percent of the total amount bid, as a guarantee that the successful bidder will enter into the Contract and execute the Bonds on the forms provided and provide the required insurance certificates within 7 days after the date Contract Documents are received by the Contractor.
Copies of the bidding documents may be obtained from www.CivcastUSA.com. Bidders must register on this website in order to view and/or download specifications, plans, soils report and environmental reports for this project. There is NO charge to view or download documents.
Said documents may be examined without charge in the office of Jones & Carter, Inc. Construction Division, 6335 Gulfton, Houston, Texas 77081.
The Owner reserves the right to reject any or all Bids and to waive all defects and irregularities in bidding or bidding process except time of submitting a Bid. The Successful Bidder, if any, will be the responsible Bidder which in the Board's judgment will be most advantageous to the District and result in the best and most economical completion of the Project.

We'll help you find your home sweet home.

930 LEGAL NOTICES

Notice of Public Hearing
US 59: from Spur 10 to SH 99
The Texas Department of Transportation (TxDOT) will conduct a public hearing on the proposed widening of US 59 from Spur 10 to SH 99, in Fort Bend County, Texas. The hearing will be conducted on Thursday, May 16, 2013, in the auditorium of Terry High School, 5500 Ave N, Rosenberg, Texas 77471. The purpose of the hearing is to discuss the social, economic and environmental effects of the proposed project and receive comments from the public. The hearing will begin with an open house from 5:30 to 6:30 pm. Project staff will answer questions on the proposed project during the open house. The formal public hearing will begin promptly at 6:30 pm, followed by a public comment period.
From Spur 10 to FM 762, TxDOT proposes to widen the existing 4-lane divided highway to a 6-lane highway divided by a grassy median. This segment would also include continuous 2-lane frontage roads where they are currently discontinuous. Grade separation/interchange improvements would be performed at various intersections. From FM 762 to SH 99, the proposed project would widen the existing 4-lane divided highway to 8 general-purpose lanes (4 each way), plus 2 additional high-occupancy vehicle (HOV) lanes (one in each direction). Directions of travel would be separated by a concrete barrier. The segment would also include continuous 3-lane frontage roads, which are currently discontinuous 2-lane frontage roads.
The project would require approximately 54.95 acres of additional right-of-way and three commercial displacements. It would not require residential displacements. The project would increase vehicle capacity, reduce congestion, update US 59 to current design and safety standards, and rectify identified operational deficiencies.
The Environmental Assessment, project exhibits, maps and design drawings will be available for review at the hearing. This information is available by appointment for review and copying at TxDOT's Houston District Office, 7600 Washington Avenue, Houston, Texas 77007, and at TxDOT's Fort Bend Area Office, 4235 SH 36, Rosenberg, Texas 77471.
All interested persons are invited to attend this hearing. Persons interested in attending the hearing that have special communication or accommodation needs are encouraged to contact the District Public Information Officer at (713) 802-5072 at least two working days before the hearing. The public hearing will be con-

near stairway B, 1418 Eugene Heimann Circle, Richmond, Tx 77469
TERMS OF SALE: CASH
CREDIT- $0.00
The above sale to be made by me to satisfy the above described judgment for **$2,097.25 IN DAMAGES; PREJUDGMENT INTEREST IN THE AMOUNT OF $130.46; ATTORNEY'S FEES IN THE AMOUNT OF $1,500.00; ALL COSTS OF COURT; JUDGMENT SHALL BEAR INTEREST AT THE RATE OF 5% PER ANNUM FROM THE DATE OF JUDGMENT UNTIL PAID; AND $289.00 COST OF SUIT,** dollars, in favor of **Fairpark Village Community Association** together with the costs of said suit, and the proceeds applied to the satisfaction thereof.
A. J. DORR
CONSTABLE PRECINCT ONE
Richmond, Texas
by **Billy Guerrero III #1111**
DEPUTY
April 9, 2013

INVITATION TO BIDDERS
Sealed Bids, in duplicate, addressed to Fort Bend County Municipal Utility District No. 151, Attention Mr. Stephen Swindell, President, Board of Directors, will be received at the office of Jones & Carter, Inc., 6335 Gulfton, Houston, Texas 77081 until 10:00 a.m. Local Time, Tuesday, April 30, 2013, and then publicly opened and read for "Water, Sanitary, and Drainage Facilities for Firethorne Section 28 in Fort Bend County, Texas"
Scope of Work of the Contract includes the construction of approximately 4,750 linear feet of 4-inch through 8-inch waterline, 3,560 linear feet of 8-inch through 10-inch sanitary sewer, and 3,388 linear feet of 24-inch through 48-inch RCP storm sewer.
Bids received after the closing time will be returned unopened.
A pre-bid conference will be held on Tuesday, April 23, 2013, at 10:00 a.m. Local Time, at the office of Jones & Carter, Inc., 6335 Gulfton, Houston, Texas 77081. Attendance is not mandatory.
Each Bid must be accompanied by a bid bond or a certified or cashier's check, acceptable to the Owner, in an amount not less than 5 percent of the total amount bid, as a guarantee that the successful bidder will enter into the Contract and execute the Bonds on the forms provided and provide the required insurance certificates within 7 days after the date Contract Documents are received by the Contractor.
Copies of the bidding documents may be obtained from www.CivcastUSA.com. Bidders must register on this website in order to view and/or download specifications, plans, soils report and environmental reports for this project. There is NO charge to view or download documents.
Said documents may be examined without charge in the office of Jones & Carter, Inc. Construction Division, 6335 Gulfton, Houston, Texas 77081.
The Owner reserves the right to reject any or all Bids and to waive all defects and irregularities in bidding or bidding process except time of submitting a Bid. The Successful Bidder, if any, will be the responsible Bidder which in the Board's judgment will be most advantageous to the District and result in the best and most economical completion of the Project.

Looking for A

gin, or an intention, to make any such preference, limitation or discrimination."

Familial status includes children under the age of 18 living with parents or legal custodians, pregnant women and people securing custody of children under 18.

This newspaper will not knowingly accept any advertising for real estate which is in violation of the law. Our readers are hereby informed that all dwellings advertised in this newspaper are available on an equal opportunity basis. To complain of discrimination call HUD toll-free at 1-800-669-9777. The toll-free telephone number for the hearing impaired is 1-800-927-9275.

710 DUPLEXES

Rosenberg Duplex
1910 Louise St. 3Bdrm. 2 bth $725 + dep. W/ shelter **832-353-6875**

720 HOUSES

THE GROVE: 3/2/2
$1100/mo +$1100/dep
No Pets Pref., No Sect. 8. Call Kent
713-907-1971

NEEDVILLE 3/2/2
Nice, Brick, FP, Near Elem. School, $1200
281-948-2136

735 OFFICE-WAREHOUSE

NEW BUILDING
Office/Warehouse Space
Lots Of Parking,1200-3200 SqFt Easy Access
713-306-2321

COMMERCIAL SPACE AVAILABLE
2000 Sq. Ft. Up
Mellon Real Estate
281-342-4603

CASH, COWS, Corn, Cars--you'll find them all in the Classified section of the Fort Bend Herald.

SUBSCRIBE FOR Convenience. Call 232-3737 or 342-4474.

PASTURE

HORSE STALLS
Available. Turn out pasture, round pen. Private barn, owners on property. FM 723 near FM 1093 area. Please text or leave a message at:
832-586-5047

800 ACREAGE

Needville-2.28 Acres
Great Location!!!!
1-BLK off HWY 36.
Commercial or Residential. All Utilities.
Financing Available.
223' X 415'. Broker:
713-858-1113

815 MOBILE HOMES

1998 SUNSHINE Mobile Home
Boling area. 16X76 with deck and wheelchair ramp, new A/C & WH. Full kitchen and laundry and much furniture. $13,000
979-533-2052

★★★★★★

MOBILE HOME CITY
1226 HWY 90-A
WE HAVE IN HOUSE
FINANCING AVAILABLE
On Refurbished Repos..
Singles & Doubles Avail..
Fifty To Choose From.
Make The Call Today!!!
281-342-3335
(Se Habla Espanol)
Complete Parts Store Avail. RBI 34120

TRACK DOWN a better job with the classifieds. If you're looking for work, get a head start with the employment section of the classified.

WHERE'S THE best place to find a whole host of bargains on a wide array of merchandise? Place your ad today and let the Classifieds do your work!

PUT YOUR money worries behind you with the Fort Bend Herald Want Ads. Call 232-3737 or 342-4474 to place your ad.

includes the construction of approximately 1,850 linear feet of 8-inch waterline, 1,563 linear feet of 8-inch sanitary, and 1,250 linear feet of 24-inch RCP storm sewer.

Bids received after the closing time will be returned unopened.

A pre-bid conference will be held on Tuesday, April 30, 2013, at 10:00 a.m. Local Time, at the office of Jones & Carter, Inc., 6335 Gulfton, Houston, Texas 77081. Attendance is not mandatory.

Each Bid must be accompanied by a bid bond or a certified or cashier's check, acceptable to the Owner, in an amount not less than 5 percent of the total amount bid, as a guarantee that the successful bidder will enter into the Contract and execute the Bonds on the forms provided and provide the required insurance certificates within 7 days after the date Contract Documents are received by the Contractor.

Copies of the bidding documents may be obtained from www.CivcastUSA.com. Bidders must register on this website in order to view and/or download specifications, plans, soils report and environmental reports for this project. There is NO charge to view or download documents.

Said documents may be examined without charge in the office of Jones & Carter, Inc. Construction Division, 6335 Gulfton, Houston, Texas 77081.

The Owner reserves the right to reject any or all Bids and to waive all defects and irregularities in bidding or bidding process except time of submitting a Bid. The Successful Bidder, if any, will be the responsible Bidder which in the Board's judgment will be most advantageous to the District and result in the best and most economical completion of the Project.

We'll help you find your home sweet home.

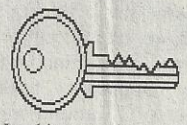

Looking to buy, sell or rent, the Classifieds are a sweet deal. Listings include large homes, small homes, co-ops, apartments and condos. It's make to order for the house hunter or buyer. Real estate in the Classifieds-ready when you are!

232-3737

the public. The hearing will begin with an open house from 5:30 to 6:30 pm. Project staff will answer questions on the proposed project during the open house. The formal public hearing will begin promptly at 6:30 pm, followed by a public comment period.

From Spur 10 to FM 762, TxDOT proposes to widen the existing 4-lane divided highway to a 6-lane highway divided by a grassy median. This segment would also include continuous 2-lane frontage roads where they are currently discontinuous. Grade separation/interchange improvements would be performed at various intersections. From FM 762 to SH 99, the proposed project would widen the existing 4-lane divided highway to 8 general-purpose lanes (4 each way), plus 2 additional high-occupancy vehicle (HOV) lanes (one in each direction). Directions of travel would be separated by a concrete barrier. The segment would also include continuous 3-lane frontage roads, which are currently discontinuous 2-lane frontage roads.

The project would require approximately 54.95 acres of additional right-of-way and three commercial displacements. It would not require residential displacements. The project would increase vehicle capacity, reduce congestion, update US 59 to current design and safety standards, and rectify identified operational deficiencies.

The Environmental Assessment, project exhibits, maps and design drawings will be available for review at the hearing. This information is available by appointment for review and copying at TxDOT's Houston District Office, 7600 Washington Avenue, Houston, Texas 77007, and at TxDOT's Fort Bend Area Office, 4235 SH 36, Rosenberg, Texas 77471.

All interested persons are invited to attend this hearing. Persons interested in attending the hearing that have special communication or accommodation needs are encouraged to contact the District Public Information Officer at (713) 802-5072 at least two working days before the hearing. The public hearing will be conducted in English. Requests for language interpreters or other special communication needs should be made at least two working days before the public hearing. TxDOT will make every reasonable effort to accommodate these needs. The TxDOT office is open Monday through Friday from 8:00 am to 5:00 pm, excluding state holidays.

Oral and written comments about this project may be presented at the hearing. Written statements may also be submitted to the TxDOT Houston District office at 7600 Washington Avenue, Houston, or mailed to the Director of Project Development, TxDOT Houston District, P.O. Box 1386, Houston, Texas 77251, or emailed to hou-pioweb-mail@txdot.gov. Comments must be postmarked or emailed by May 30, 2013 to be included in the public hearing record.

Directors, will be received at the office of Jones & Carter, Inc., 6335 Gulfton, Houston, Texas 77081 until 10:00 a.m. Local Time, Tuesday, April 30, 2013, and then publicly opened and read for "Water, Sanitary, and Drainage Facilities for Firethorne Section 28 in Fort Bend County, Texas"

Scope of Work of the Contract includes the construction of approximately 4,750 linear feet of 4-inch through 8-inch waterline, 3,560 linear feet of 8-inch through 10-inch sanitary sewer, and 3,388 linear feet of 24-inch through 48-inch RCP storm sewer.

Bids received after the closing time will be returned unopened.

A pre-bid conference will be held on Tuesday, April 23, 2013, at 10:00 a.m. Local Time, at the office of Jones & Carter, Inc., 6335 Gulfton, Houston, Texas 77081. Attendance is not mandatory.

Each Bid must be accompanied by a bid bond or a certified or cashier's check, acceptable to the Owner, in an amount not less than 5 percent of the total amount bid, as a guarantee that the successful bidder will enter into the Contract and execute the Bonds on the forms provided and provide the required insurance certificates within 7 days after the date Contract Documents are received by the Contractor.

Copies of the bidding documents may be obtained from www.CivcastUSA.com. Bidders must register on this website in order to view and/or download specifications, plans, soils report and environmental reports for this project. There is NO charge to view or download documents.

Said documents may be examined without charge in the office of Jones & Carter, Inc. Construction Division, 6335 Gulfton, Houston, Texas 77081.

The Owner reserves the right to reject any or all Bids and to waive all defects and irregularities in bidding or bidding process except time of submitting a Bid. The Successful Bidder, if any, will be the responsible Bidder which in the Board's judgment will be most advantageous to the District and result in the best and most economical completion of the Project.

Looking for A New Home?

The Fort Bend Herald Classifieds Can Help You Find One.

281-342-4474

5-6

Berg-Oliver Associate

PUBLISHER'S AFFIDAVIT

Public Hearing

THE STATE OF TEXAS §
COUNTY OF FORT BEND §

Before me, the undersigned authority, on this day personally appeared Stan Woody who being by me duly sworn, deposes and says that he is the Publisher of *Fort Bend Herald* and that said newspaper meets the requirements of Section 2051.044 of the Texas Government Code, to wit:

1. it devotes not less than twenty-five percent (25%) of its total column lineage to general interest items;

(CLIPPING) (S)
ON Back

2. it is published at least once each week;

3. it is entered as second-class postal matter in the county where it is published; and

4. it has been published regularly and continuously since 1959.

5. it is generally circulated within Fort Bend County.

Publisher further deposes and says that the attached notice was published in said newspaper on the following date(s) to wit:

5-6

_____, A.D. 2013

_____
Stan Woody
Publisher

SUBSCRIBED AND SWORN BEFORE ME by Stan Woody who

X a) is personally known to me, or

_____ b) provided the following evidence to establish his/her identity, _____

on this the 6th day of May, A.D. 2013
to certify which witness my hand and seal of office.

Vanessa L. Muniz
Notary Public, State of Texas

VANESSA L. MUNIZ
Notary Public, State of Texas
My Commission Expires
January 19, 2016

705 UNFURN APART.

PUBLISHERS NOTICE:
All Real estate advertising in this newspaper is subject to the Fair Housing Act which makes it illegal to advertise "any preference, limitation or discrimination based on race, color, religion, sex, handicap, familial status or national origin, or an intention, to make any such preference, limitation or discrimination."
Familial status includes children under the age of 18 living with parents or legal custodians, pregnant women and people securing custody of children under 18.
This newspaper will not knowingly accept any advertising for real estate which is in violation of the law. Our readers are hereby informed that all dwellings advertised in this newspaper are available on an equal opportunity basis. To complain of discrimination call HUD toll-free at 1-800-669-9777. The toll-free telephone number for the hearing impaired is 1-800-927-9275.

710 DUPLEXES

Newly Remodeled Duplex, 2/2 each side. Rosenberg area. 281-725-1934

720 HOUSES

NEEDVILLE 3/2/2
Nice, Brick, FP, Near Elem. School, $1200
281-948-2136

2/1 ROSENBERG
2 Min From Hwy 59
Quiet Loc, Fenced Yard, CA&H, Washer Dryer Hook-Up
$720/Mo 832-287-2700

FOR RENT: 4bdrm/ 2bth House, Needville $1100/mo + Dep.
281-467-3653

3/2/2: 5026 Riverwood

800 ACREAGE

NEEDVILLE AREA
4.62 Ac., FM1994, Fenced, 4" Well, 3-phase Electric, Unrestricted, $75,000.
6.74 Ac., Corner FM 360 & Williams Sch., Com'l/Retail/Church Site $450,000
100 Ac., Routt Pt. Rd. & 4-Corners Rd. Pasture, Mobile Home, Barn, Well, Septic, $450,000.
Fort Bend Real Estate Bud 281-242-2200

810 HOUSES FOR SALE

3 Bdrm/2.5 Bth/1 CG
1307 Wilson Dr., Rosenberg
Brian Ladewig - Realtor **832-875-0508**

815 MOBILE HOMES

28ft BPull Travel Trailers Custom Built 4 U
2 Bed Rm or Toy Haulers or Large Bath Rm Or ??? Sleep 4-6 , Call for details
979-885-6767
Reliable Homes of Sealy, 33813. Starting $6450.00

★★★★★★
MOBILE HOME CITY
1226 HWY 90-A
WE HAVE IN HOUSE
FINANCING AVAILABLE
On Refurbished Repos.. Singles & Doubles Avail.. Fifty To Choose From.
Make The Call Today!!!
281-342-3335
(Se Habla Espanol)
Complete Parts Store Avail. RBI 34120

820 Farms & Ranches

21 ACRE ROW CROP FARM
West Ft. Bend County on Albert Marek Road.
979-533-0700

910 LOST & FOUND

930 LEGAL NOTICES

INVITATION TO BIDDERS
Sealed Bids, in duplicate, addressed to Sienna Plantation Municipal Utility District No. 12, Attention Mr. Stephen Jackson, President, Board of Directors, will be received at the office of the Engineer, LJA Engineering, Inc., 2929 Briarpark Drive, Suite 500, Houston, Texas 77042, until 3:00 p.m., Local Time, Wednesday, May 29, 2013, and then publicly opened and read for "Construction of the Water, Sanitary Sewer and Drainage Facilities to Serve Sienna Village of Bees Creek Section 27 for Sienna Plantation Municipal Utility District No. 12, Fort Bend County, Texas".
Scope of Work of the Contract includes the construction of the water, sanitary sewer and drainage facilities to serve Sienna Village of Bees Creek Section 27.
Bids received after the closing time will be returned unopened.
A **MANDATORY** pre-bid conference will be held on Tuesday, May 21, 2013 at 3:00 p.m., Local Time, at 2929 Briarpark Drive, Suite 500, Houston, Texas 77042. Attendance by each prospective bidder or its representative at the pre-bid conference is **MANDATORY**, and no Bid will be opened unless the bidder or representative was present at the pre-bid conference.
Each Bid must be accompanied by a bid bond or a certified or cashier's check, acceptable to the Owner, in an amount not less than 5 percent of the total amount bid, as a guarantee that the successful bidder will enter into the Contract and execute the Bonds on the forms provided and provide the required insurance certificates within 7 days after the date Contract Documents are received by the Contractor.
Bidding documents may be examined at LJA Engineering, Inc., AGC of Texas, AGC Houston, and Amtek or may be obtained by prospective bidders or suppliers upon payment of ninety-five dollars ($95.00 non-refundable plus cost of delivery) ($50.00 for electronic copy) for each set of documents at LJA Engineering, Inc., 2929 Briarpark Drive, Suite 500, Houston, Texas 77042.
The Owner reserves the right to reject any or all Bids and to waive all defects and irregularities in bidding or bidding process except time of submitting a Bid. The Successful Bidder, if any, will be the responsible Bidder which in the Board's judgment will be most advantageous to the District and result in the best and most economical completion of the Project.
Sienna Plantation Municipal Utility District No. 12

NOTICE TO BIDDERS
Sealed bids in duplicate, addressed to Fort Bend County MUD No. 194, Attention to Ms. Jennifer G. Keller, President, Board of directors, will be received at the office of Costello,

405 OFFICE HELP

Bratton Pools is seeking to fill an Office Assistant Position
Must have a professional manner, organizational skills, knowledge with computer and phones. Bi-lingual (fluent Spanish) a plus. Hourly rate of $10.00 per hour. Schedule is 20-30 hours a week, October- March. 30-40 hours a week April- September. Please call:
281-988-7700
to schedule an interview

410 GENERAL HELP

JOB VACANCY
Brazos ISD is accepting applications for the position of
Vocational Agriculture Science Program Teacher/Director
Applications are online at brazosisd.net or can be picked up at
227 Educator Lane, Wallis, Texas 77485
in the administrative office
Send your application, resume, and documentation of certification to
Brazos ISD, P. O. Box 819,
Wallis, Texas 77485
or to **jellis@brazosisd.net**

800 ACREAGE

3 + ACRES – FOR SALE
Fish Pond, Fully stocked, Corner tract, paved on two sides. High fence, two large gates, Electricity, water and sewer available, near Brazos River.
$39,900.00 CASH
CALL TRAVIS 281.342.3127

930 LEGAL NOTICES

NOTICE TO BIDDERS
The City of Fulshear, Texas will receive sealed bids for **Purchase and Installation of a Prefab Outdoor Restroom at the Irene Stern Community Center located at 6920 Katy**

Notice of Public Hearing US 59: from Spur 10 to SH 99
The Texas Department of Transportation (TxDOT) will conduct a public hearing on the proposed widening of US 59 from Spur 10 to SH 99, in Fort

3/2/2: 5026 Riverwood Dr., Richmond
$900/Mo. + Dep.
713-480-1103
Or 281-932-9449

2 BDRM HOUSE
In Guy, Cent A/H, New Appl, Trees, Very Nice
$675/mo + Dep.
979-793-4288
Or 713-725-4609

THE GROVE: 3/2/2
$1100/mo +$1100/dep
No Pets Pref., No Sect. 8. Call Kent
713-907-1971

725 MOBILE HOMES

2 BEDROOM 1 BATH
Rosenberg On Hill Rd
Call: 713-643-4752
or 832-236-8384

735 OFFICE-WAREHOUSE

COMMERCIAL SPACE AVAILABLE
2000 Sq. Ft. Up
Mellon Real Estate
281-342-4603

✪✪✪✪✪✪✪

NEW BUILDING
Office/Warehouse Space
Lots Of Parking,1200-3200 SqFt Easy Access
713-306-2321

800 ACREAGE

20+ Ac., Owner Finance-Needville ISD
832-344-6711
832-563-3803

NEED A classified! Call 281-232-3737.

& FOUND

FOUND DOG
At Fiesta in Rosenberg, Medium In Size, Beige, Bad Skin Condition
979-627-3096
Or 979-900-9384

930 LEGAL NOTICES

Public Notice
Lamar Consolidated Independent School District
Notice
Public Meeting

Lamar CISD receives block grants of federal funds. A public hearing will be held pertaining to the use of these monies by L.C.I S.D. The meeting will be held Monday, May 6th at 3:00 in L.C.I.S.D. Room 112C at 3911 Ave I in Rosenberg, Texas.

We'll help you find your home sweet home.

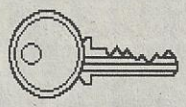

Looking to buy, sell or rent, the Classifieds are a sweet deal. Listings include large homes, small homes, co-ops, apartments and condos. It's make to order for the house hunter or buyer. Real estate in the Classifieds-ready when you are!

232-3737

ceived at the office of Costello, Inc., 9990 Richmond Avenue, Suite 450, North Building, Houston, Texas 77042 until 2:00 p.m. local time, Tuesday, May 21, 2013 and then publicly opened and read for "Construction of Water, Sewer, Drainage and Paving Improvements for Long Meadow Farms, Section 32 within Fort Bend County MUD No. 194." A mandatory pre-bid conference will be held at the office of Costello, Inc. at 2:00 p.m. local time Tuesday, May 14, 2013. No attendee may represent more than one bidder for the purpose of satisfying this mandatory pre-bid conference attendance requirement. **ONLY BIDS RECEIVED FROM BIDDERS WHO ATTEND THE PRE-BID CONFERENCE WILL BE CONSIDERED.** Proposals from bidders not attending the mandatory pre-bid conference will be returned unopened and will not be considered for the contract award. Plans, specifications and bid documents may be viewed and downloaded free of charge (with the option to purchase hard copies) at the CivCastUSA Website (www.CivCastUSA.com). Reproduction charges will apply according to CivCastUSA rates.

Looking for A New Home?

The Fort Bend Herald Classifieds Can Help You Find One.

281-342-4474

the Irene Stern Community Center located at 6920 Katy Fulshear Road on **May 15, 2013** at 2:00 p.m. at City Hall, 30603 F.M. 1093, Fulshear, Texas (281-346-1796).

A bid bond in the amount of 5% of the bid, issued by an acceptable surety, must be submitted with each bid. A certified check or bank draft payable to the City of Fulshear in negotiable U.S. Government Bonds (as per value) may be submitted in lieu of Bid Bond.

Attention is called to the fact that not less than the federally determined prevailing (Davis-Bacon) wage rate, as issued by the U.S. Department of Labor and contained in the contract documents must be paid on this project. In addition, the successful bidder must ensure that employees and applicants for employment are not discriminated against because of their race, color, religion, sex or national origin. This project is being funded by a grant provided through the State of Texas.

The City of Fulshear reserves the right to reject any or all bids or to waive any formalities in the bidding.

Bids may be held by the City of Fulshear for a period not to exceed 60 days from the date of the bid opening for the purpose of reviewing the bids and investigating the bidders qualifications prior to the contract award.

Bonded general contractor may obtain one set of bid documents at the office of the Engineer, **Clay & Leyendecker, Inc., 1350 Avenue D, Katy, Tx 77493, (281) 391-0173**, upon deposit of a check in the amount of $35.00, payable to Clay & Leyendecker, Inc. ***Bidder must telephone before coming to pick up plans.***

IF YOU are looking for a pet, horse, automobile, home etc. The classifieds are the place to look. And if you are selling, the classifieds can help you. Call 281-232-3737 and place your ad.

proposed widening of US 59 from Spur 10 to SH 99, in Fort Bend County, Texas. The hearing will be conducted on Thursday, May 16, 2013, in the cafeteria of Terry High School, 5500 Ave N, Rosenberg, Texas 77471. The purpose of the hearing is to discuss the social, economic and environmental effects of the proposed project and receive comments from the public. The hearing will begin with an open house from 5:30 to 6:30 pm. Project staff will answer questions on the proposed project during the open house. The formal public hearing will begin promptly at 6:30 pm, followed by a public comment period.

From Spur 10 to FM 762, TxDOT proposes to widen the existing 4-lane divided highway to a 6-lane highway divided by a grassy median. This segment would also include continuous 2-lane frontage roads where they are currently discontinuous. Grade separation/interchange improvements would be performed at various intersections. From FM 762 to SH 99, the proposed project would widen the existing 4-lane divided highway to 8 general-purpose lanes (4 each way), plus 2 additional high-occupancy vehicle (HOV) lanes (one in each direction). Directions of travel would be separated by a concrete barrier. The segment would also include continuous 3-lane frontage roads, which are currently discontinuous 2-lane frontage roads.

The project would require approximately 54.95 acres of additional right-of-way and three commercial displacements. It would not require residential displacements. The project would increase vehicle capacity, reduce congestion, update US 59 to current design and safety standards, and rectify identified operational deficiencies.

The Environmental Assessment, project exhibits, maps and design drawings will be available for review at the hearing. This information is available by appointment for review and copying at TxDOT's Houston District Office, 7600 Washington Avenue, Houston, Texas 77007, and at TxDOT's Fort Bend Area Office, 4235 SH 36, Rosenberg, Texas 77471.

All interested persons are invited to attend this hearing. Persons interested in attending the hearing that have special communication or accommodation needs are encouraged to contact the District Public Information Officer at (713) 802-5072 at least two working days before the hearing. The public hearing will be conducted in English. Requests for language interpreters or other special communication needs should be made at least two working days before the public hearing. TxDOT will make every reasonable effort to accommodate these needs. The TxDOT office is open Monday through Friday from 8:00 am to 5:00 pm, excluding state holidays.

Oral and written comments about this project may be presented at the hearing. Written statements may also be submitted to the TxDOT Houston District office at 7600 Washington Avenue, Houston, or mailed to the Director of Project Development, TxDOT Houston District, P.O. Box 1386, Houston, Texas 77251, or emailed to hou-pioweb-mail@txdot.gov. Comments must be postmarked or emailed by May 30, 2013 to be included in the public hearing record. The US 59 EA and the Schematics are available for public viewing at the TxDOT web site: http://www.txdot.gov/inside-txdot/get-involved/about/hearings-meetings.html.

CLASSIC SUDOKU

Fill in the blank cells using numbers 1 to 9. Each number can appear only once in each row, column and 3x3 block. Use logic and process elimination to solve the puzzle. The difficulty level ranges from Bronze (easiest) to Silver to Gold (hardest).

Rating: BRONZE

8	1	6				5		9
			6		3		1	
	4	7		1			8	
	6				7			
7	3	1		5		8	9	2
			1				7	
	5			6		9	2	
	7		3		9			
2		9				4	6	3

Solution to 5/4/13

1	5	4	6	7	8	2	3	9
7	3	9	1	5	2	6	4	8
6	8	2	3	4	9	5	7	1
4	2	7	9	6	5	8	1	3
9	1	5	7	8	3	4	2	6
3	6	8	4	2	1	7	9	5
8	4	3	5	1	7	9	6	2
2	7	1	8	9	6	3	5	4
5	9	6	2	3	4	1	8	7

© 2013 Janric Enterprises Dist. by creators.com

5/6/13

ALTERNATIVE LANGUAGE AFFIDAVIT OF PUBLICATION

STATE OF TEXAS_____§

COUNTY OF_____Fort Bend_____§

Before me, the undersigned notary public, on this day personally appeared

_____Joe R. Morales_____, who being by me dully sworn.
(name of newspaper representative)

deposes and says that (s)he is the Editor and Sales Representative
(title of newspaper representative)

of the Las Noticias de Fort Bend; that said newspaper is generally
(name or newspaper)

circulated in_____Fort Bend County_____, Texas; and
(name of county in the proposed facility)

is published primarily in_____Spanish_____language; that the
(alternative language)

attached notice was published in said newspaper on the following date(s);

_____4/17/13 + 5/8/13_____.

_____Joe R Morales_____*(Newspaper Representative's Signature)*

Subscribed and sworn to before me this the 15 day of May 2013,

to certify which witness by my hand and seal of office.

(Seal)

Felicita Arriaga
Notary Public in and for the State of Texas

FELICITA ARRIAGA
NOTARY PUBLIC
STATE OF TEXAS
MY COMM. EXP. 3/15/16

Felicita Arriaga
Print or Type Name of Notary Public

Commission Expires 03-15-2016

ou can adopt
animals that

ugar Land, TX
uri City, TX
d, TX
n, TX

ora)
0 p.m.
0 p.m.)
0 p.m.
00 p.m.)
00 p.m
00 p.m)

d, TX
ugar Land, TX

ora)
00 p.m.
00 p.m.)
00 p.m
00 p.m)

ugar Land, TX
on, TX

ora)
0 p.m.
0 p.m.)
00 p.m
00 p.m)

s Place, TX

ora)
0 p.m.
0 p.m.)
0 p.m
00 p.m)

re Rd.,

ora)
0 p.m.
0 p.m.)
0 p.m
00 p.m)

"Habla la Mujer"

Continuación De Página 16

logros de 16 latinas excepcion-ales que viven en los Estados Uni-dos. Entre las mujeres destacadas figuran la actriz Gina Rodríguez, la boxeadora olím-pica Marlén Esparza, la chef Daisy Martínez, la comediante Rosemery Almonte y la poeta y activista Caridad de la Luz, "La Bruja".

"En una época en que los latinos han asumido un rol central a lo largo de todos los sectores y en todos los aspectos del éxito de nuestro país, 'Habla Women' no podría haber llegado en mejor momento", dijo Alberto Ferreras, director del documental. "Me hubiera gustado poder incluir más historias, ya que estaba muy inspirado por todas y cada una de las mujeres mostradas".

A la proyección, celebrada en el Angelika Film Center, asistió Ferreras, así como la co-directora Trina Bardusco y Marlén Esparza, la boxeadora olímpica incluida en el documental. La Red de Mujeres Hispanas de Texas también fue honrada por sus sobresalientes contribuciones a la comunidad hispana del estado.

DishLATINO emitirá "Habla Women" a nivel nacional por HBO Latino (canal 309) a las 7 pm hora del centro, el jueves 18 de abril.

STUFFED —

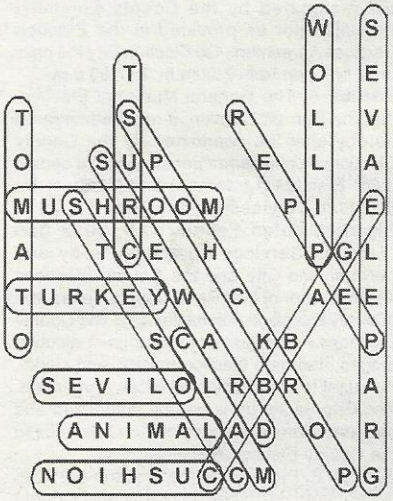

Aviso de Audiencia Pública
US 59 desde Spur 10 hasta SH 99

El Departamento de Transporte de Texas (TxDOT) conducirá una audiencia pública sobre la ampliación propuesta de la carretera US 59 desde Spur 10 hasta SH 99, en el Condado de Fort Bend, Texas. La audiencia se llevará a cabo en Jueves, 16 de mayo 2013, en el auditorio de la escuela Terry High School, 5500 Ave. N, Rosenberg, Texas 77471. El propósito de la audiencia es discutir los efectos sociales, económicos y ambientales del proyecto propuesto y recibir comentarios del público. La audiencia comenzará con un formato de foro abierto de 5:30 a 6:30 de la tarde. El personal del proyecto respondera a las preguntas sobre el proyecto propuesto durante el periodo del foro abierto. La audiencia pública formal comenzará puntualmente a las 6:30 pm, seguido por un perfodo de comentarios públicos.

Desde Spur 10 a FM 762, TxDOT propone ampliar la actual carretera de 4 carriles a una carretera dividida de 6 carriles dividida por una mediana. Este segmento también incluye calles laterales de dos carriles continuos donde se encuentran actualmente discontinuados. Mejoras a los intercambios que se realizaron en varias intersecciones. Desde FM 762 hasta SH 99, el proyecto propuesto ampliar la carretera existente de 4 carriles divididos en 8 carriles de uso general (4 en cada sentido), más 2 adicionales para vehículos de alta ocupación (HOV) uno en cada dirección. Direcciones de viaje estarían separadas por una barrera de concreto. El segmento también incluiría tres carriles de caminos laterales continuos, que actualmente son dos carriles discontinuos.

El proyecto requeriría aproximadamente 54.95 acres de derecho de vía adicional y tres desplazamientos comerciales. No requeriría desplazamientos residenciales. El proyecto aumentaría la capacidad de trafico, reducir la congestión, actualizar US 59 con el diseño actual y las normas de seguridad, y rectificar las deficiencias de operativos detectadas.

La Evaluación Ambiental, exposiciones sobre el proyecto, mapas y dibujos de diseño estarán disponibles para su revisión en la audiencia pública. Esta información está disponible por cita para revisión y copia en Houston District Office, 7600 Washington Avenue, Houston, Texas 77007, y en la Oficina de TxDOT Fort Bend Area Office, 4235 SH 36, Rosenberg, Texas 77471.

Todas las personas interesadas están invitadas a asistir a esta audiencia. Las personas interesadas en asistir a la audiencia que tienen comunicación especial o necesidades de alojamiento se pongan en contacto con el Oficial de Información Pública del Distrito al (713) 802-5072 por lo menos dos días hábiles antes de la audiencia. La audiencia pública se llevará a cabo en Inglés. Las solicitudes de intérpretes de lenguaje o otras necesidades especiales de comunicación debe hacerse por lo menos dos días hábiles antes de la audiencia pública. TxDOT hará todo esfuerzo razonable para acomodar estas necesidades. La oficina de TxDOT está abierta de lunes a viernes de 8:00 am a 5:00 pm, excepto los días festivos estatales.

Los comentarios verbales y escritos por parte del público con respecto a este proyecto pueden ser presentados en la audiencia o por escrito después de la audiencia. Los comentarios escritos también se pueden enviarse por correo a TxDOT Houston District, Attention: Director of Project Development, P.O. Box 1386, Houston, TX 77251-13860 por correo electrónico a hou-piowebmail@txdot.gov. Los comentarios escritos o enviados deben ser recibidos en o antes del 30 de mayo de 2013 para estar incluido en el registro de la audiencia pública.

"WHY NOT GET MORE DEEPLY INVOLVED?"

Notice of Public Hearing
US 59: from Spur 10 to SH 99

The Texas Department of Transportation (TxDOT) will conduct a public hearing on the proposed widening of US 59 from Spur 10 to SH 99, in Fort Bend County, Texas. The hearing will be conducted on Thursday, May 16, 2013, in the cafeteria of Terry High School, 5500 Ave N, Rosenberg, Texas 77471. The purpose of the hearing is to discuss the social, economic and environmental effects of the proposed project and receive comments from the public. The hearing will begin with an open house from 5:30 to 6:30 pm. Project staff will answer questions on the proposed project during the open house. The formal public hearing will begin promptly at 6:30 pm, followed by a public comment period.

From Spur 10 to FM 762, TxDOT proposes to widen the existing 4-lane divided highway to a 6-lane highway divided by a grassy median. This segment would also include continuous 2-lane frontage roads where they are currently discontinuous. Grade separation/interchange improvements would be performed at various intersections. From FM 762 to SH 99, the proposed project would widen the existing 4-lane divided highway to 8 general-purpose lanes (4 each way), plus 2 additional high-occupancy vehicle (HOV) lanes (one in each direction). Directions of travel would be separated by a concrete barrier. The segment would also include continuous 3-lane frontage roads, which are currently discontinuous 2-lane frontage roads.

The project would require approximately 54.95 acres of additional right-of-way and three commercial displacements. It would not require residential displacements. The project would increase vehicle capacity, reduce congestion, update US 59 to current design and safety standards, and rectify identified operational deficiencies.

The Environmental Assessment, project exhibits, maps and design drawings will be available for review at the hearing. This information is available by appointment for review and copying at TxDOT's Houston District Office, 7600 Washington Avenue, Houston, Texas 77007, and at TxDOT's Fort Bend Area Office, 4235 SH 36, Rosenberg, Texas 77471.

All interested persons are invited to attend this hearing. Persons interested in attending the hearing that have special communication or accommodation needs are encouraged to contact the District Public Information Officer at (713) 802-5072 at least two working days before the hearing. The public hearing will be conducted in English. Requests for language interpreters or other special communication needs should be made at least two working days before the public hearing. TxDOT will make every reasonable effort to accommodate these needs. The TxDOT office is open Monday through Friday from 8:00 am to 5:00 pm, excluding state holidays.

Oral and written comments about this project may be presented at the hearing.

Written statements may also be submitted to the TxDOT Houston District office at 7600 Washington Avenue, Houston, or mailed to the Director of Project Development, TxDOT Houston District, PO. Box 1386, Houston, Texas 77251, or emailed to hou-piowebmail@ txdot.gov. Comments must be postmarked or emailed by May 30, 2013 to be included in the public hearing record. The US 59 EA and the Schematics are available for public viewing at the TxDOT web site: http://www.txdot.govlinside-txdot/get-involved/about/ hearings-meetings.html.

Glo

La Nueva Pro

Continuación de P

destaca por sus colabora
artistas premiados y co
miento mundial, de la
intérprete y autora Lau
violinista Joshua Bell
ista Dave Koz.

Esta propuesta ambic
dejado en suspenso d
mucho tiempo," segú
quién se acercó a este
al lado de Frank Sina
álbum Duets (1993),
"Come Rain Or Come S
él, y más recientemente
Bennett en su disco V
("Who Can I Turn To [V
body Needs Me]"),
escuchando a Frank
Johnny Mathis, Henry
grandes artistas romá
México y en Cuba," dice
quién nació en La Haba
género es ideal para mi,
música siempre repres
catarsis para mí.'

Estefan esperó hacer
de clásicos hasta "haber
con primaveras sufic
afirma, "porque hay tanta
que requieren vivenci
entegarlas con la cred
adecuada." El concepto r
tomó fuerzas en una
consejo de administraci
Escuela de Música Fro
Universidad de Miami
Shelly Berg, quién ha r
producción artística y
musicales para artistas co
Austin, Elliot Smith y
Sandoval, funge como re

"Nos sentamos al pia
más para divertirnos y n
cantar una canción qu
presentado hace 30 años
nuestra primera actuació
programa de Carson," dic
fan, recordando su presenta
"Conga," el cual fue su
éxito contundente con
Sound Machine en 1983.

Appendix B: Public Notice Mailing Lists and Notifications

	TITLE	ORGINAZATION	Position	Salutation	First	Last	Address	City	ST	Zip
	The Honorable	United States	Senator	Senator	John	Cornyn	5300 Memorial Drive, Suite 980	Houston	TX	77007
	The Honorable	United States	Senator	Senator	Ted	Crus	1919 Smith St., Suite #800	Houston	TX	77002
	The Honorable	United States District 22	Representative	Representative	Pete	Olson	1650 Highway 6, Suite 150	Sugae Land	TX	77478
	The Honorable	State District 17	Senator	Senator	Joan	Huffman	P.O. Box 12068 Capital Station	Austin	TX	78711
	The Honorable	State District 17	Senator	Senator	Joan	Huffman	6217 Edloe	Houston	TX	77005
	The Honorable	State District 18	Senator	Senator	Glenn	Hegar	P.O. Box 12068 Capital Station	Austin	TX	78711
	The Honorable	State District 18	Senator	Senator	Glenn	Hegar	P.O. Box 1008	Katy	TX	77492
	The Honorable	State District 28	Representative	Representative	John	Zerwas	Room E2.308, Capitol Extension, P.O. Box 2910	Austin	TX	78768
	The Honorable	State District 28	Representative	Representative	John	Zerwas	P.O. Box 434	Simonton	TX	77476
	The Honorable	Fort Bend	County Judge	Judge	Bob	Hebert	301 Jackson Street	Richmond	TX	77469
	The Honorable	Fort Bend	Commissioner, Precinct 1	Commisionsr	Richard	Morrrison	301 Jackson Street	Richmond	TX	77002
	The Honorable	Rosenburg	Mayor	Mayor	M.	Morales, Jr.	2110 4th Street, P.O. Box 32	Rosenburg	TX	77471-0032
	The Honorable	Rosenburg	Councilor	Councilor	Bill	Benton	2110 4th Street, P.O. Box 32	Rosenburg	TX	77471-0032
	The Honorable	Rosenburg	Councilor	Councilor	Cynthia	McConathy	2110 4th Street, P.O. Box 32	Rosenburg	TX	77471-0032
	The Honorable	Rosenburg	Councilor	Councilor	Juan	Salazar	2110 4th Street, P.O. Box 32	Rosenburg	TX	77471-0032
	The Honorable	Rosenburg	Councilor	Councilor	Joe G.	Segura	2110 4th Street, P.O. Box 32	Rosenburg	TX	77471-0032
	The Honorable	Rosenburg	Councilor	Councilor	Dwayne	Grigar	2110 4th Street, P.O. Box 32	Rosenburg	TX	77471-0032
	The Honorable	Rosenburg	Councilor	Councilor	Tom	Suter	2110 4th Street, P.O. Box 32	Rosenburg	TX	77471-0032
	The Honorable	Sugarland	Mayor	Mayor	A.	Thompson	P.O. Box 110	Sugar Land	TX	77487-0110
	The Honorable	Sugarland	Councilmember	Councilmember	Himesh	Gandhi	P.O. Box 110	Sugar Land	TX	77487-0110
	The Honorable	Sugarland	Councilmember	Councilmember	Joe R.	Zimmerman	P.O. Box 110	Sugar Land	TX	77487-0110
	The Honorable	Sugarland	Councilmember	Councilmember	L.	Smithers	P.O. Box 110	Sugar Land	TX	77487-0110
	The Honorable	Sugarland	Councilmember	Councilmember	Bridget	Yeung	P.O. Box 110	Sugar Land	TX	77487-0110
	The Honorable	Sugarland	Mayor Pro Tem	Councilmember	Harish	Jajoo	P.O. Box 110	Sugar Land	TX	77487-0110

Texas Department of Transportation®
P.O. BOX 1386 • HOUSTON, TEXAS 77251-1386 • (713) 802-5000

April 12, 2013

CERTIFIED MAIL «Certified»

«Title» «FirstName» «LastName»
«Position», «Organization»
«Addr1»
«City», «ST» «Zip»

Fort Bend County
US 59: From SH 99 to Spur 10
CSJ 0027-12-097, etc,

Dear «Salutation» «LastName»:

Attached is a notice for the upcoming public hearing for the US 59 roadway improvements project from SH 99 to Spur 10 in Fort Bend County, Texas. This public hearing is being held to present the proposed design and to seek comments from local officials and citizens. You, or your representative, are cordially invited to attend. See attached meeting location map.

Thursday, May 16, 2013
Terry High School
5500 Ave N
Rosenberg, Texas 77471
5:30 p.m. – 6:30 p.m. Open House
6:30 p.m. Presentation

We are available to meet with you prior to the public hearings to answer any questions that you may have or to review the proposed project. If you have any questions in the interim, please contact Pat Henry at (713) 802-5241.

Sincerely,

Michael W. Alford, P.E.
District Engineer
Houston District

SCANNED
APR 17 2013
PROJECT DEVELOPMENT

Attachments
cc: Pat Henry, P.E.

Notice of Public Hearing
US 59: from Spur 10 to SH 99

The Texas Department of Transportation (TxDOT) will conduct a public hearing on the proposed widening of US 59 from Spur 10 to SH 99, in Fort Bend County, Texas. The hearing will be conducted on Thursday, May 16, 2013, in the auditorium of Terry High School, at 5500 Ave N, Rosenberg, Texas 77471. The purpose of the hearing is to discuss the social, economic and environmental effects of the proposed project and receive comments from the public. The hearing will begin with an open house from 5:30 p.m. to 6:30 p.m. Project staff will answer questions on the proposed project during the open house. The formal public hearing will begin promptly at 6:30 p.m., followed by a public comment period.

From Spur 10 to FM 762, TxDOT proposes to widen the existing 4 lane divided highway to a 6 lane highway divided by a grassy median. This segment would also include continuous 2 lane frontage roads where they are currently discontinuous. Grade separation/interchange improvements would be performed at various intersections. From FM 762 to SH 99, the proposed project would widen the existing 4 lane divided highway to 8 general purpose lanes (4 each way), plus 2 additional high occupancy vehicle (HOV) lanes (one in each direction). Directions of travel would be separated by a concrete barrier. The segment would also include continuous 3 lane frontage roads, which are currently discontinuous 2 lane frontage roads.

The project would require approximately 54.95 acres of additional right-of-way and three commercial displacements. It would not require residential displacements. The project would increase vehicle capacity, reduce congestion, update US 59 to current design and safety standards, and rectify identified operational deficiencies

The Environmental Assessment, project exhibits, maps and design drawings will be available for review at the hearing. This information is available by appointment for review and copying at TxDOT's Houston District Office, 7600 Washington Avenue, Houston, Texas 77007, and at TxDOT's Fort Bend Area Office, 4235 SH 36, Rosenberg, Texas 77471.

All interested persons are invited to attend this hearing. Persons interested in attending the hearing that have special communication or accommodation needs are encouraged to contact the District Public Information Officer at (713) 802-5072 at least two working days before the hearing. The public hearing will be conducted in English. Requests for language interpreters or other special communication needs should be made at least two working days before the public hearing. TxDOT will make every reasonable effort to accommodate these needs. The TxDOT office is open Monday through Friday from 8:00 a.m. to 5:00 p.m., excluding state holidays.

Oral and written comments about this project may be presented at the hearing. Written statements may also be submitted to the TxDOT Houston District office at 7600 Washington Avenue, Houston, or mailed to the Director of Project Development, TxDOT Houston District, P.O. Box 1386, Houston, Texas 77251, or emailed to hou-piowebmail@txdot.gov. Comments must be postmarked or emailed by May 30, 2013 to be included in the public hearing record.

Aviso de Audiencia Pública
US 59
desde Spur 10 hasta SH 99

El Departamento de Transporte de Texas (TxDOT) conducirá una audiencia pública sobre la ampliación propuesta de la carretera US 59 desde Spur 10 hasta SH 99, en el Condado de Fort Bend, Texas. La audiencia se llevará a cabo en Jueves, 16 de mayo 2013, en el auditorio de la escuela Terry High School, 5500 Ave. N, Rosenberg, Texas 77471. El propósito de la audiencia es discutir los efectos sociales, económicos y ambientales del proyecto propuesto y recibir comentarios del público. La audiencia comenzará con un formato de foro abierto de 5:30 a 6:30 de la tarde. El personal del proyecto responderá a las preguntas sobre el proyecto propuesto durante el periodo del foro abierto. La audiencia pública formal comenzará puntualmente a las 6:30 pm, seguido por un período de comentarios públicos.

Desde Spur 10 a FM 762, TxDOT propone ampliar la actual carretera de 4 carriles a una carretera dividida de 6 carriles dividida por una mediana. Este segmento también incluye calles laterales de dos carriles continuos donde se encuentran actualmente discontinuados. Mejoras a los intercambios que se realizaron en varias intersecciones. Desde FM 762 hasta SH 99, el proyecto propuesto ampliar la carretera existente de 4 carriles divididos en 8 carriles de uso general (4 en cada sentido), más 2 adicionales para vehículos de alta ocupación (HOV) uno en cada dirección. Direcciones de viaje estarían separadas por una barrera de concreto. El segmento también incluiría tres carriles de caminos laterales continuos, que actualmente son dos carriles discontinuos.

El proyecto requeriría aproximadamente 54.95 acres de derecho de vía adicional y tres desplazamientos comerciales. No requeriría desplazamientos residenciales. El proyecto aumentaría la capacidad de trafico, reducir la congestión, actualizar US 59 con el diseño actual y las normas de seguridad, y rectificar las deficiencias de operativos detectadas.

La Evaluación Ambiental, exposiciones sobre el proyecto, mapas y dibujos de diseño estarán disponibles para su revisión en la audiencia pública. Esta información está disponible por cita para revisión y copia en Houston District Office, 7600 Washington Avenue, Houston, Texas 77007, y en la Oficina de TxDOT Fort Bend Area Office, 4235 SH 36, Rosenberg, Texas 77471.

Todas las personas interesadas están invitadas a asistir a esta audiencia. Las personas interesadas en asistir a la audiencia que tienen comunicación especial o necesidades de alojamiento se pongan en contacto con el Oficial de Información Pública del Distrito al (713) 802-5072 por lo menos dos días hábiles antes de la audiencia. La audiencia pública se llevará a cabo en Inglés. Las solicitudes de intérpretes de lenguaje o otras necesidades especiales de comunicación debe hacerse por lo menos dos días hábiles antes de la audiencia pública. TxDOT hará todo esfuerzo razonable para acomodar estas necesidades. La oficina de TxDOT está abierta de lunes a viernes de 8:00 am a 5:00 pm, excepto los días festivos estatales.

Los comentarios verbales y escritos por parte del público con respecto a este proyecto pueden ser presentados en la audiencia o por escrito después de la audiencia. Los comentarios escritos también se pueden enviarse por correo a TxDOT Houston District, Attention: Director of Project Development, P.O. Box 1386, Houston, TX 77251-1386 o por correo electrónico a hou-piowebmail@txdot.gov. Los comentarios escritos o enviados deberi ser recibidos en o antes del 30 de mayo de 2013 para estar incluido en el registro de la audiencia pública.

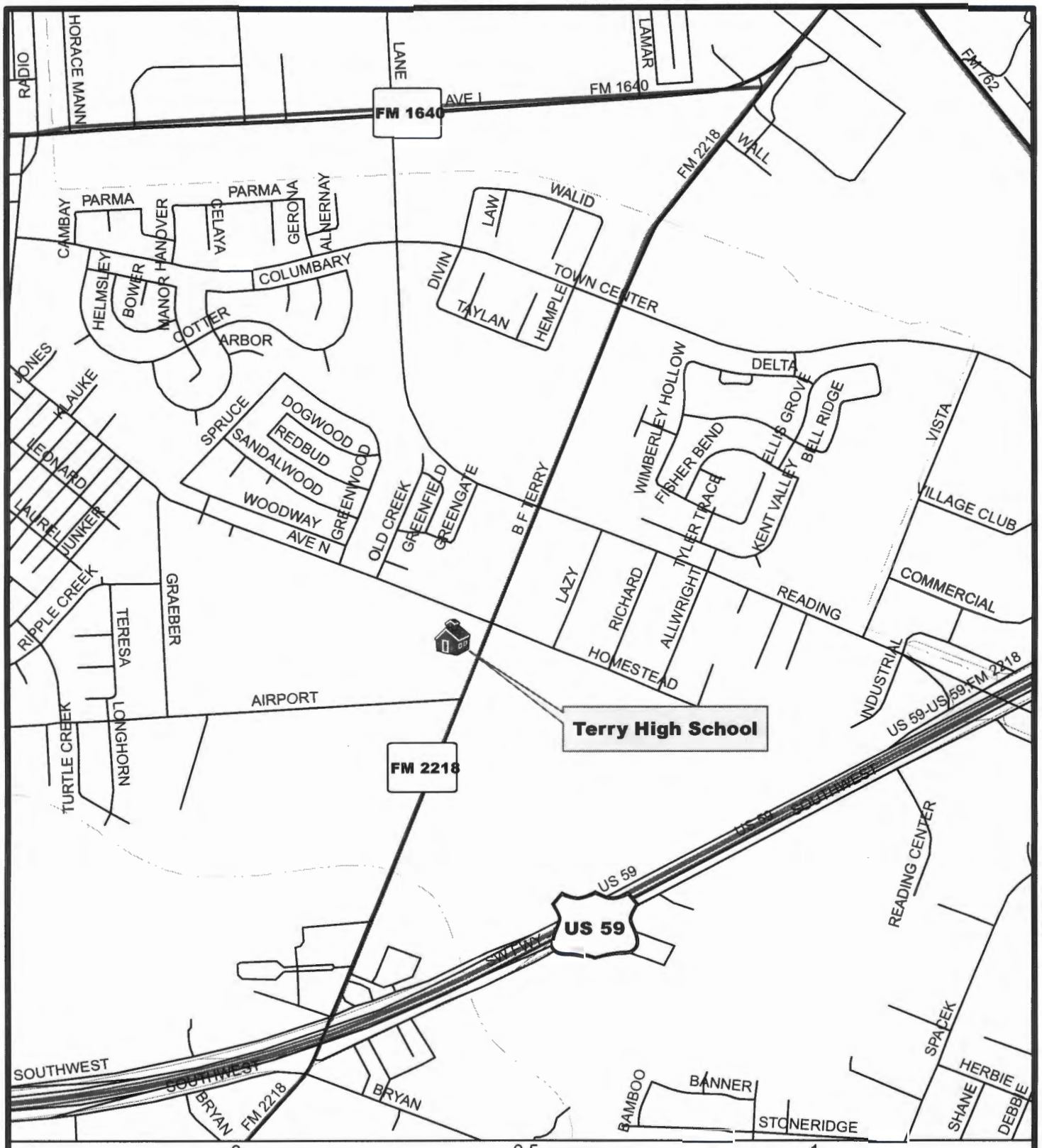

Thursday, May 16, 2013,
Auditorium of Terry High School,
5500 Ave N, Rosenberg, Texas 77471
5:30 p.m. – 6:30 p.m. Open House
6:30 Public Hearing

Public Hearing For US 59 from SH 99 To Spur 10

US 59 North Segment (Spur 10 to SH 99)
Adjacent Landowner Mailing List

Name	Address	City/State
4All Southwest LLC	6718 Pleak RD	Richmond,TX 77469-7468
Alattar Farouk & Rima	706 Alkire Lake DR	Sugar Land,TX 77478-3402
Alattar, Farouk & Rima	6890 SOUTHWEST FWY	HOUSTON,TX 77074-2104
Argo Investments LLC	6422 Coley PARK	Sugar Land,TX 77479-5594
A-S 70 Hwy 59 - FM 762 LP	8807 W Sam Houston PKWY N STE 200	Houston,TX 77040-5321
Attn Property Tax Dept Centerpoint Energy Houston Electric LLC	PO Box 1475	Houston,TX 77251-1475
Attn: R D Tips Mission-Rosenberg Inc	PO Box 14000	San Antonio,TX 78214-4000
Attn: Steven D. Alvis c/o NewQuest Properties	8827 W Sam Houston Parkway N Ste 200	Houston,TX 77040-5383
Attn: TAX DEPT Waffle House Inc	PO BOX 6450	NORCROSS,GA 30091-6450
BK Services Inc	26111 Southwest FWY	Rosenberg,TX 77471-5680
BLEX Exchange II LP	820 GESSNER RD STE #1800	HOUSTON,TX 77024-4468
Blystone, Randy J	30925 Southwest FWY	Rosenberg,TX 77471-4465
Brazos TC-Partnership A LP	8827 W Sam Houston PKWY N STE 200	Houston,TX 77040-5383
BRD LLC	453 Oakshire PL	Alamo,CA 94507-2333
Brengrove Investments I LTD	2450 Fondren RD STE #210	Houston,TX 77063-2323
Brinker Texas Inc	6820 Lyndon B Johnson FWY	Dallas,TX 75240-6511
Canyon Gate at the Brazos Owners Assoc Inc	1230 Brazos Traces DR	Richmond,TX 77469-2200
CAR CSL LP	800 Gessner RD STE 500	Houston,TX 77024-4498
City of Richmond	402 MORTON ST	RICHMOND,TX 77469-3121
City Of Rosenberg	PO Box 32	Rosenberg,TX 77471-0032
CL Thomas Petroleum INC	PO Box 1876	Victoria,TX 77902-1876
CL Waterford LLC	6300 Bee Cave RD BLDG #2- STE 500	Austin,TX 78746-5833
Clay Group Ltd	28000 Southwest FWY	Rosenberg,TX 77471-7101
Cottonwood Homeowners Association Inc	11000 Corporate Centre DR STE 150	Houston,TX 77041-5179
Cullis Michael D etal	39 Doherty DR	Middletown,NJ 07748-3303
Danziger, Paul Nelson	5510 Holly ST	Houston,TX 77081-7410
Deedco Properties Inc	9219 Katy FWY STE 120	Houston,TX 77024-1513
DeZavallos Edward P & David G Edgar	9219 Katy FWY STE #120	Houston,TX 77024-1513
DTK America Realty LLC	11110 Bellaire BLVD STE #107	Houston,TX 77072-2609
Elea Automotive LLC	27309 Southwest FWY	Rosenberg,TX 77471-7152
Eleo LLC	404 E 79th ST APT #9B	New York,NY 10075-1406
Eller Media Company	12852 Westheimer RD	Houston,TX 77077-5712
EMT Investments LLC	1181 Brittmoore RD STE #300	Houston,TX 77043-5026
Fanco Inc	7733 Tanglewilde ST STE #102	Houston,TX 77036-5507

US 59 North Segment (Spur 10 to SH 99)
Adjacent Landowner Mailing List

First Ag Credit FLCA	P O Drawer 351	Rosenberg,TX 77471-0351
FLORES, ALICE	102 VERA CRUZ DR	ROSENBERG,TX 77471-4118
FOODMAKER/JACK IN THE BOX INC	PO BOX 783	SAN DIEGO,CA 92112-0783
Fort Bend County	301 Jackson ST RM 101	Richmond,TX 77469-3108
FORT BEND MUD #116 % SUSAN L BROWN VINSON & ELKINS LLP	1001 FANNIN ST STE 2300	HOUSTON,TX 77002-6710
Fort Bend MUD 121	3200 Southwest FWY STE 2600	Houston,TX 77027-7537
Fuller 59/36 Ltd	1800 Augusta DR FL 4	Houston,TX 77057-3149
Gayatri International LLC	28332 Southwest FWY	Rosenberg,TX 77471-9679
George Foundation	PMB STE C 310 MORTON ST	RICHMOND,TX 77469-3119
Gillman Autoplex of Fort Bend Inc	7611 BELLAIRE BLVD	HOUSTON,TX 77036-5805
Gillman-Gould Properties LTD	10595 W Sam Houston PKWY S	Houston,TX 77099-2844
Global New Millennium Partners Ltd	4415 Highway 6	Sugar Land,TX 77478-4476
Group 1 Realty Inc	800 Gessner RD STE 500	Houston,TX 77024-4498
Gubbels, Julius Patrick	PO Box 1789	Rosenberg,TX 77471-1789
Gulf/Landmark 74 Venture LP	710 N Post Oak RD STE #400	Houston,TX 77024-3812
Haas Evelyn etal	126 Cedar Elm LN	Georgetown,TX 78633-1820
Harwin Exchange Center Inc	PO Box 740289	Houston,TX 77274-0289
Harwin Exchange Center Inc	8901 Richmond AVE	Houston,TX 77063-4922
Herfort Properties LTD	2200 Avenue H	Rosenberg,TX 77471-2636
Holli Ann Hardin Trust Number One	3414 Old Richmond RD	Rosenberg,TX 77471-2855
Houston Federal Credit Union	16320 Kennsington BLVD	Sugar Land,TX 77479-4097
HQK Reading Road LLC	5606 Grand Masterpiece CT	Houston,TX 77041-5530
Hussin, Syad Mudassir	2520 Thoroughbred LN	Orono,MN 55356-9678
HWY 36 Properties LTD	12651 Briar Forest DR STE #300	Houston,TX 77077-2382
IPP Hospitality LLC C/o Palace Inn	26035 Southwest Fwy	Rosenberg,TX 77471-5679
Jay Parmatma LLC	27927 Southwest FWY	Rosenberg,TX 77471-7102
Jerry D & Mary A Young Revocable Living Trust	316 Leon RD	Rosenberg,TX 77471-9596
JM Texas Land Fund No 4 LP	3200 SOUTHWEST FWY STE #3000	HOUSTON,TX 77027-7567
JSF Properties LP	4771 Sweetwater BLVD STE #337	Sugar Land,TX 77479-3121
Jurek Ernest R & Terry A	4110 Scott CIR	Rosenberg,TX 77471-9505
Kiecke, Howard K	915 Millpond DR	Sugar Land,TX 77498-2768
Kiecke, Howard K	915 Millpond DR	Sugar Land,TX 77498-2768
KJD Rosenberg LLC	54 Commanders CV	Missouri City,TX 77459-6520
Land Tejas Sansbury LLC	2450 Fondren STE 210	Houston,TX 77063-2323
Landmark 60 Venture LP	710 N POST OAK RD STE 400	HOUSTON,TX 77024-3812

US 59 North Segment (Spur 10 to SH 99)
Adjacent Landowner Mailing List

Lawrence E Bishop Trust	1128 W Franklin ST	Monterey,CA 93940-2114
Los Puentes Office Park Property Owners Association Inc	5325 Katy FWY STE 1	Houston,TX 77007-2287
M & M Rafizadeh Family Ltd	12707 Southwest FWY	Stafford,TX 77477-3806
Maranatha Hospitality Inc	4306 PENINSULA PL	Missouri City,TX 77459-4365
MASONIC LODGE #881	PO BOX 152	ROSENBERG,TX 77471-0152
May Laverne C & Barbara	2722 Mons AVE	Rosenberg,TX 77471-6032
May, Laverne C	2722 MONS AVE	ROSENBERG,TX 77471-6032
Memorial Hermann Hospital C/o Property Tax Dept	909 Frostwood 2nd Floor, Suite 100	Houston,TX 77024
Mikolas David W & Darlene E	800 Dallas AVE	Rosenberg,TX 77471-4205
MK Ranches LLC	1 Sugar Creek Center BLVD OFC #5	Sugar Land,TX 77478-3560
MNC Realty LP	820 GESSNER RD STE #1800	HOUSTON,TX 77024-4468
Mueller INC	1915 Hutchins AVE	Ballinger,TX 76821-4401
Mullins, Marianne	83 Beach RD	Belvedere,CA 94920-2311
Multiventure Investment Group LP	1803 Willow Lake DR	Sugar Land,TX 77479-4012
Myers James Wyatt Trust	P O Box 1139	Boerne,TX 78006-1139
NMK LP	61 Pipers WALK	Sugar Land,TX 77479-2516
NRG Texas Power LLC	211 Carnegie CTR	Princeton,NJ 08540
Oakbend Medical Center	1705 Jackson ST	Richmond,TX 77469-3246
OCUSOFT Inc	5311 AVENUE N	ROSENBERG,TX 77471-5643
OLP TEXAS INC	60 Cuttermill RD STE #303	Great Neck,NY 11021-3104
Panjwani Properties Ltd	6161 Savoy DR STE #1111	Houston,TX 77036-3360
Parambil Anto Etal	5714 Sapphire Bay CT	Sugar Land,TX 77479-4157
Patel, Niranjan S	7039 GREATWOOD TRAILS CT	SUGAR LAND,TX 77479-6201
PVG Realty LP	25503 State Highway 249	Tomball,TX 77375-7711
PVG Realty Tomball LP	26433 Southwest FWY	Rosenberg,TX 77471-5674
Rajani Corporation	19901 Southwest FWY	Sugar Land,TX 77479-6538
RD Auto Real Estate Investors LP	27225 Southwest FWY	Rosenberg,TX 77471-7146
Reading Road Project Ltd	12651 Briar Forest DR STE #300	Houston,TX 77077-2382
River Pointe Community Church	5000 Ransom RD	Richmond,TX 77469-6323
Riverpark West Property Owners Association Inc c/o Crest Management Company	PO Box 219320	Houston,TX 77218-9320
RND Real Estate LP	61 Pipers WALK	Sugar Land,TX 77479-2516
Robert E Miller Trust & John W Miller Jr Trust	PO Box 157	Cranfills Gap,TX 76637-0157
Rosenberg 5936 LP	3270 Sul Ross ST	Houston,TX 77098-1930
Rosenberg FM2218 Ltd	6 Westpoint DR	Missouri City,TX 77459-6331
Rosenberg Golden Jubilee Real Estate LLC	1803 Willow Lake DR	Sugar Land,TX 77479-4012

US 59 North Segment (Spur 10 to SH 99)
Adjacent Landowner Mailing List

Saaf Real Estate LLC	4771 Sweetwater BLVD STE #337	Sugar Land,TX 77479-3121
Silver Eagle Distributors Inc	7777 WASHINGTON AVE	HOUSTON,TX 77007-1037
Sintex Minerals & Services Inc	29810 Southwest FWY	Rosenberg,TX 77471-4470
SJC Properties Ltd	10595 W Sam Houston PKWY S	Houston,TX 77099-2844
Skinner Southwest Real Property LLC	16 Orkney Isle CT	Sugar Land,TX 77479-2511
SNA Development LLC	4771 Sweetwater BLVD STE #337	Sugar Land,TX 77479-3121
Speedy Stop Food Stores Ltd	PO BOX 1876	VICTORIA,TX 77902-1876
Spur 10 Holdings LP	5610 FM 2218 RD	Richmond,TX 77469-8966
State of Texas	PO Box 1386	Houston,TX 77251-1386
Sun Development NO 436	PO Box 4456	Houston,TX 77210-4456
Susser Petroleum Company LLC	555 E Airtex DR	Houston,TX 77073-6099
Talbert, Charles D, Trustee	7501 Westview DR	Houston,TX 77055-5024
The Hlavinka Co	PO Box 1335	East Bernard,TX 77435-1335
The Zaki Family Partnership LP	1424 La Vereda LN	Santa Barbara,CA 93108-2506
Traylor, Peggy C	PO Box 46	Rosenberg,TX 77471-0046
Tropic Investments LLC	28150 Southwest FWY	Rosenberg,TX 77471-7104
Werner Partnership LTD	6509 EDLOE ST	HOUSTON,TX 77005-3705
Wheless Sarah E Heritage Trust etal	2001 Kirby DR STE #514	Houston,TX 77019-6096
Williams Way Partnership Ltd	53 CEDAR LAWN CIR	GALVESTON,TX 77551-4631
WIT Construction LLC	3630 ALDINE MAIL RD	Houston,TX 77039-4640
WJF Limited Partnership	2915 W Autumn Run CIR	Sugar Land,TX 77479-2623
WLECZYK, IRENE M	PO BOX 573	ROSENBERG,TX 77471-0573
Zed Partners LTD	9219 Katy FWY STE 120	Houston,TX 77024-1513

Amy M. Brook

From: Benson, Amy M Mrs DoD Ben USA <amy.m.benson@us.army.mil>
Sent: Monday, May 06, 2013 9:05 PM
To: Amy M. Brook
Subject: Re: US 59 Public Hearing - 'blurb' for the RiverPark West Community Website (boa # 3979)

Amy,
It has been reposted with the 2nd notice and the change was made from auditorium to cafeteria.
<><
Amy Benson
832-334-2898

On May 3, 2013, at 11:02 AM, Amy M. Brook <ABrook@bergoliver.com> wrote:

Hi, Amy…!

We have a 2nd notice (attached) that we'd like posted on your website, please… to replace the one you have on there. If this could be done on MONDAY, May 6th, that would be **wonderful** (that's when the revised notice will go in the papers, too).

The text in your website is fine – except it'll be in the cafeteria rather than the auditorium.
A couple of lines in the notice changed as well, so you should swap that existing notice PDF out with the new one.

Thanks!

From: Benson, Amy M Mrs DoD Ben USA [mailto:amy.m.benson@us.army.mil]
Sent: Wednesday, April 17, 2013 2:10 PM
To: Amy M. Brook
Subject: Re: US 59 Public Hearing - 'blurb' for the RiverPark West Community Website (boa #3979)

Sure, just go to the main page at www.riverparkwestonline.org and you should be able to pull everything up.
On Apr 17, 2013, at 1:22 PM, "Amy M. Brook" <ABrook@bergoliver.com> wrote:

That's fantastic to hear, thanks! What you did was fine!
Is there any way for me to see it on there (just in case TxDOT asks)…?

From: Benson, Amy M Mrs DoD Ben USA [mailto:amy.m.benson@us.army.mil]
Sent: Wednesday, April 17, 2013 12:37 PM
To: Amy M. Brook
Subject: Re: US 59 Public Hearing - 'blurb' for the RiverPark West Community Website (boa #3979)

Amy,
Thank you for the wording. Since I didn't hear back from anyone about it I just copy/pasted the first paragraph from the notice. The notice and the map are already posted on the website as of this morning. Thanks for getting back to me.
<><

Amy Benson
832-334-2898
On Apr 17, 2013, at 12:09 PM, Amy M. Brook <ABrook@bergoliver.com> wrote:

HI, Amy…
I spoke with Randy Corson this morning, and he asked if I could email you a 'blurb' introducing the US 59 Public Hearing, so that you can then have a link to the PDF.
His email is down, which is why he called me. He expects it to be up and running again sometime today.

Let me know if this is too long… but it gives the jist of the hearing and the project:

> TxDOT will conduct a public hearing on the proposed widening of US 59 (from Spur 10 to SH 99) on Thursday, May 16, 2013, at Terry High School in Rosenberg. The purpose of the hearing is to discuss the social, economic and environmental effects of the proposed project and receive comments from the public. The hearing will begin with an open house from 5:30 to 6:30 pm, and the formal public hearing will begin at 6:30 pm, followed by a public comment period.
>
> From Spur 10 to FM 762, TxDOT proposes to widen the existing 4-lane divided highway to a 6-lane highway divided by a grassy median. This segment would also include continuous 2-lane frontage roads where they are currently discontinuous. From FM 762 to SH 99, the project would widen the existing 4-lane divided highway to 8 general-purpose lanes (4 each way), plus 2 additional HOV lanes (one in each direction). This segment would also include continuous 3-lane frontage roads, which are currently discontinuous 2-lane frontage roads.

Thanks!! Can you please let me know when you think this will be posted on the website?
☺

Amy M. Brook
Sr. Associate
Transportation & Public Works
Berg-Oliver Associates, Inc.
1907 Ascension Blvd., Suite 440
Arlington, TX 76006
Office: 817-548-9998
Mobile: 817-719-7468
abrook@bergoliver.com

<><
Amy Benson
832-334-2898

<><
Amy Benson
832-334-2898

<US 59 North_Public Hearing Notice (English Spanish)_2nd Run.pdf>

<><
Amy Benson
832-334-2898

Welcome to River Park West

Our community website was developed to serve as an informative resource for both our neighborhood and our local community. Please feel free to contact us with your comments and suggestions.

~ Neighborhood News ~

Notice of Public Hearing US 59: from Spur 10 to SH 99
Posted on Apr 17th, 2013
The Texas Department of Transportation (TxDOT) will conduct a public hearing on the proposed widening of US 59 from Spur 10 to SH 99, in Fort Bend County, Texas. The hearing will be conducted on Thursday, May 16, 2013, in the cafeteria of Terry High School, 5500 Ave N, Rosenberg, Texas 77471. The purpose of the hearing is to discuss the social, economic and environmental effects of the proposed project and receive comments from the public. The hearing will begin with an open house from 5:30 to 6:30 pm. Project staff will answer questions on the proposed project during the open house. The formal public hearing will begin promptly at 6:30 pm, followed by a public comment period. Click here to view a copy of the updated 2nd Notice.

Open Board/Volunteer Positions
Posted on Apr 17th, 2013
The following board positions are currently needed:

President
Vice-President

The following volunteer positions are currently needed:

Yard of the Month
Community Garage Sale
Christmas Decorations
Social Coordinator

~ Survey ~

Please login to view and vote in our survey.

~ Upcoming Events ~

Juniper Court Memorial Day Party
Sunday, May 26th, 2013 Larchmont Court Cul-de-sac from 5:00pm-9:00pm
Come and join us in the Larchmont Ct Cul-de-sac for a Memorial Day block party Saturday the 26th! Other River Park West Residents are welcome to attend. Bring a dish to share or something to throw on the grill along with your lawn chairs and drinks to the cul-de-sac to celebrate Memorial Day and visit with your neighbors! If you have any questions, please call Amy Benson 832-334-2898

View All Events

If you are interested in any of the above positions, please contact Randy Corson. randyc@mischer.com or 713-293-3523

Pool Keys Are Now Available
Posted on Apr 17th, 2013
Pool Keys are now available. If you have not received a letter in the mail to request a key, please click here to print one out and send it in to Crest Management.

The Clubhouse is available for your event.
Posted on Nov 7th, 2011
Contact Crest Management to schedule the Clubhouse for your next event. You can also download the rental agreement and reservation form here. There is no rantal charge, but a cleaning fee and deposit is required.

Contact Information For Fort Bend MUD 121
Posted on Mar 23rd, 2011
You can contact the directors of the Fort Bend County Municipal Utility District 121 (MUD 121) at the following email address: MUD121@riverparkwestonline.org

MUD 121 is responsible for development, operation, and maintenance of the water, sewer, and storm sewer/drainage systems in RiverPark West. In addition, MUD 121 builds and maintains several of the walking trails and green spaces in the development. Please note that email sent to this address are not received or monitored by RiverPark West Property Owner's Association. Messages are delivered directly to the three resident directors serving on the MUD 121 Board of Directors. The POA makes this email address available for the convenience of our residents and MUD 121.

Advertising Space Available in the Newsletter and on this Website
Posted on Oct 7th, 2008
If you would like to advertise in our quarterly newletter, please click here. Various sized ads are available from 1/8 page to full page and inserts. If you know of a business owner that may be interested, please pass along this information. Newsletter ads come with a free website ad. Website-only ads are also available.

Please send an email to communications@riverparkwestonline.org for additional information.

Please Register on This Site To Stay Up to Date on Community Events
Posted on Oct 6th, 2008
Registration is free and allows you to receive emails from the Association regarding upcoming events. You can also create a personal profile, upload photos, and more.

Read More >>

View Archives

~ Welcome New Neighbors ~

© Copyright 2013 River Park West | Homeowners Association Website by HOA Sites | Policies | Admin

Amy M. Brook

From: L Franklin <canyongatekeeper@yahoo.com>
Sent: Sunday, June 09, 2013 3:38 AM
To: Amy M. Brook
Subject: Re: US 59 North Public Hearing - notices for distribution - 2nd Notice - Canyon Gate & Canyon Lakes (at the Brazos)

Yes, Canyon Gate at the Brazos has distributed your notices to its members. Thank you.

To: 'L Franklin'
Sent: Friday, June 7, 2013 9:42 AM
Subject: FW: US 59 North Public Hearing - notices for distribution - 2nd Notice - Canyon Gate & Canyon Lakes (at the Brazos)

forwarding

From: Amy M. Brook [mailto:ABrook@bergoliver.com]
Sent: Friday, June 07, 2013 8:11 AM
To: brazosreccenter@sbcglobal.net
Subject: RE: US 59 North Public Hearing - notices for distribution - 2nd Notice - Canyon Gate & Canyon Lakes (at the Brazos)

Good Morning!

Would there be any way to get confirmation/documentation(?) that you all distributed the notices on y'all's community website?
We are documenting the outreach/advertising efforts.

Thanks,
Amy

From: Amy M. Brook
Sent: Friday, May 03, 2013 11:11 AM
To: 'brazosreccenter@sbcglobal.net'
Subject: RE: US 59 North Public Hearing - notices for distribution - 2nd Notice - Canyon Gate & Canyon Lakes (at the Brazos)

Good morning…
We would like to request a 2nd distribution of the public notice… If this could be done on MONDAY, May 6th, that would be **wonderful** (that's when the revised notice will go in the newspapers, too (we have to notify people 30 days and 10 days out)).

The only changes are that the hearing will be in the cafeteria rather than the auditorium. Plus, TxDOT added a line about a website on which people can view the EA and schematics.

Thank you, and *please don't hesitate to contact me if you have any questions*!
Thanks!

Amy M. Brook
Sr. Associate

Transportation & Public Works
Berg-Oliver Associates, Inc.
1907 Ascension Blvd., Suite 440
Arlington, TX 76006
Office: 817-548-9998
Mobile: 817-719-7468
abrook@bergoliver.com

From: Amy M. Brook
Sent: Friday, April 12, 2013 11:28 AM
To: 'brazosreccenter@sbcglobal.net'
Subject: FW: US 59 North Public Hearing - notices for distribution - Canyon Gate & Canyon Lakes (at the Brazos)

Morning!
Attached is the public notice in English & Spanish, plus a map of where the hearing will be held.

Please confirm that you've received these... Let me know if you prefer a Word file, too.

Thanks so much!
Sincerely,
Amy

From: Amy M. Brook
Sent: Thursday, April 11, 2013 11:02 AM
To: brazosreccenter@spcglobal.net
Subject: US 59 North Public Hearing - notices for distribution - Canyon Gate & Canyon Lakes (at the Brazos)

Good Morning!

On Tuesday I sent you the Public Notice for TxDOT's US 59 public hearing… We received word that the English version is approved; we are not trying to get the Spanish translation ready & approved. As soon as I have that, I will email you both versions for distribution (whether that is by mail, or email, or putting on the communities' website)….

Thank you again for your cooperation & assistance!
Sincerely,

Amy M. Brook
Sr. Associate
Transportation & Public Works
Berg-Oliver Associates, Inc.
1907 Ascension Blvd., Suite 440
Arlington, TX 76006
Office: 817-548-9998
Mobile: 817-719-7468
abrook@bergoliver.com

Amy M. Brook

From: Tiffany Conley <T.Conley@pmghouston.com>
Sent: Tuesday, May 07, 2013 10:14 AM
To: Amy M. Brook
Subject: RE: US 59 North - public hearing notice - community of Cottonwood (boa #3979 T-PI)

Yes. I did receive

Thank You
Tiffany Conley
Assistant Community Manager

Principal Management Group of Houston, AAMC- An Associa® Company
11000 Corporate Centre Drive #150
Houston, Texas 77041
Office: 713-329-7100
Direct: 713-329-7136
Associa® - Delivering unsurpassed management and lifestyle services to communities worldwide. Learn more at www.pmghouston.com / Follow us at www.facebook.com/PMGHouston

Notice: This e-mail message is for the sole use of the intended recipient(s) and may contain confidential and privileged information. Any unauthorized review, use, disclosure or distribution is prohibited. If you are not the intended recipient, please contact the sender by reply e-mail and destroy all copies of the original message. Please virus check all attachments to prevent widespread contamination and corruption of files and operating systems. The unauthorized access, use, disclosure, or distribution of this email may constitute a violation of the Federal Electronic Communications Privacy Act of 1986 and similar state laws. This communication does not reflect an intention by the sender or the sender's client or principal to conduct a transaction or make any agreement by electronic means. Nothing contained in this message or in any attachment shall satisfy the requirements for a writing, and nothing contained herein shall constitute a contract or electronic signature under the Electronic Signatures in Global and National Commerce Act, any version of the Uniform Electronic Transactions Act or any other

-----Original Message-----
From: Amy M. Brook [mailto:ABrook@bergoliver.com]
Sent: Tuesday, May 07, 2013 10:01 AM
To: Tiffany Conley
Subject: RE: US 59 North - public hearing notice - community of Cottonwood (boa #3979 T-PI)

Hi, Tiffany.... just confirming that you receive this email?

Thanks so much!
Amy

-----Original Message-----
From: Amy M. Brook
Sent: Friday, May 03, 2013 11:13 AM
To: 'Tiffany Conley'
Subject: RE: US 59 North - public hearing notice - community of Cottonwood (boa #3979 T-PI)

Hi, Tiffany.!

We have a 2nd notice (attached) that we'd like posted on your website, please. to replace the one you have on there. If this could be done on MONDAY, May 6th (or thereabouts), that would be wonderful (that's when the revised notice will go in the papers, too).

The only changes are that the hearing will be in the cafeteria rather than the auditorium. Plus, TxDOT added a line about a website on which people can view the EA and schematics.

Thank you, and please don't hesitate to contact me if you have any questions!

Amy M. Brook
Sr. Associate
Transportation & Public Works
Berg-Oliver Associates, Inc.
1907 Ascension Blvd., Suite 440
Arlington, TX 76006
Office: 817-548-9998
Mobile: 817-719-7468
abrook@bergoliver.com

-----Original Message-----
From: Tiffany Conley [mailto:T.Conley@pmghouston.com]
Sent: Friday, April 12, 2013 2:08 PM
To: Amy M. Brook
Subject: RE: US 59 North - public hearing notice - community of Cottonwood (boa #3979 T-PI)

I have received. Getting read to post

Thank You
Tiffany Conley
Assistant Community Manager

Principal Management Group of Houston, AAMC- An Associa® Company
11000 Corporate Centre Drive #150
Houston, Texas 77041
Office: 713-329-7100
Direct: 713-329-7136
Associa® - Delivering unsurpassed management and lifestyle services to communities worldwide. Learn more at www.pmghouston.com / Follow us at www.facebook.com/PMGHouston

Notice: This e-mail message is for the sole use of the intended recipient(s) and may contain confidential and privileged information. Any unauthorized review, use, disclosure or distribution is prohibited. If you are not the intended recipient, please contact the sender by reply e-mail and destroy all copies of the original message. Please virus check all attachments to prevent widespread contamination and corruption of files and operating systems. The unauthorized access, use, disclosure, or distribution of this email may constitute a violation of the Federal Electronic Communications Privacy Act of 1986 and similar state laws. This communication does not reflect an intention by the sender or the sender's client or principal to conduct a transaction or make any agreement by electronic means. Nothing contained in this message or in any attachment shall satisfy the requirements for a writing, and nothing contained herein shall constitute a contract or

electronic signature under the Electronic Signatures in Global and National Commerce Act, any version of the Uniform Electronic Transactions Act or any other

-----Original Message-----
From: Amy M. Brook [mailto:ABrook@bergoliver.com]
Sent: Friday, April 12, 2013 9:29 AM
To: Tiffany Conley
Subject: RE: US 59 North - public hearing notice - community of Cottonwood (boa #3979 T-PI)

Tiffany, attached is the public notice in English & Spanish, plus a map of where the hearing will be held.

Please confirm that I haven't screwed up your email address and that you've received these... Let me know if you prefer a Word file, too.

Thanks so much!
Sincerely,
Amy

-----Original Message-----
From: Amy M. Brook
Sent: Thursday, April 11, 2013 10:53 AM
To: 't.conley@pmghouston.com'
Subject: US 59 North - public hearing notice - community of Cottonwood (boa #3979 T-PI)

Hi, Tiffany...

The English version is approved to be published, but we need to send out a Spanish translation of it, too. I will email it to you for distribution within Cottonwood.
We really appreciate your assistance with this!

Thanks!

Amy M. Brook
Sr. Associate
Transportation & Public Works
Berg-Oliver Associates, Inc.
1907 Ascension Blvd., Suite 440
Arlington, TX 76006
Office: 817-548-9998
Mobile: 817-719-7468
abrook@bergoliver.com

Amy M. Brook

From: Hartfiel, Kelly <khartfiel@pcmi-us.com>
Sent: Tuesday, May 07, 2013 10:02 AM
To: Amy M. Brook
Subject: RE: Notice of Public Hearing RE: Lakes of Williams Ranch

Categories: Important

Yes we did.

Thanks
Kelly

From: Amy M. Brook [mailto:ABrook@bergoliver.com]
Sent: Tuesday, May 07, 2013 10:01 AM
To: Hartfiel, Kelly
Subject: RE: Notice of Public Hearing

Hi, Kelly…. Just confirming that you received this email?
Thanks so much!
Amy

From: Amy M. Brook
Sent: Friday, May 03, 2013 11:07 AM
To: 'Hartfiel, Kelly'; Bill Frank
Cc: Mike Casey; Nancy Fairley; Adame, Ermalinda; Linda Casey
Subject: RE: Notice of Public Hearing

Hi, Kelly…

We would like to request a 2nd e-mail blast, and please attach this 2nd Notice… to replace the one you have on there, since a few lines have changed. If this could be done on MONDAY, May 6th, that would be **wonderful** (that's when the revised notice will go in the newspapers, too).

The text in your website is fine – except it'll be in the cafeteria rather than the auditorium.

Thank you, and please don't hesitate to contact me if you have any questions!
Thanks!

Amy M. Brook
Sr. Associate
Transportation & Public Works
Berg-Oliver Associates, Inc.
1907 Ascension Blvd., Suite 440
Arlington, TX 76006
Office: 817-548-9998
Mobile: 817-719-7468
abrook@bergoliver.com

From: Hartfiel, Kelly [mailto:khartfiel@pcmi-us.com]
Sent: Tuesday, April 23, 2013 12:49 PM
To: Bill Frank
Cc: Mike Casey; Nancy Fairley; Adame, Ermalinda; Amy M. Brook; Linda Casey
Subject: Notice of Public Hearing

Bill,

Can you send this out via email blast?

This is a Notice of Public Hearing to widen the existing 4 lane divided highway to a 6 lane highway divided by a grassy median from Spur 10 to FM 762. From FM 762 to SH 99, the project would widen the existing 4 lane divided highway to 8 general purpose lanes (4 each way) plus 2 additional high-occupancy vehicle lanes.

This Public Hearing is scheduled for Thursday, May 16, at the Terry High School Auditorium. There will be an Open House from 5:30 – 6:30 with the Public Hearing beginning promptly at 6:30.

Thanks for sending this email blast for me.

Sincerely,

Kelly Hartfiel
Community Manager
Planned Community Management, Inc.
a division of Severn Trent Services
Erma Adame, Admininstrative Assistant
281-870-0585
eadame@pcmi-us.com

Appendix C: Exhibits and Handouts from Hearing

Public Hearing / Audiencia Pública

US 59: Spur 10 to SH 99

US 59: Proposed US 59 Improvements Project / Proyecto de mejoramientos propuestos de US 59

May 16, 2013 – Terry High School, 5500 Ave N, Rosenberg, TX 77471

Agenda / Orden del Día

Welcome to the Public Hearing for U.S. Highway 59 (US 59) from Spur 10 to State Highway 99 (SH 99). The purpose of this hearing is to solicit comments on the proposed project and the Draft Environmental Assessment (EA).

Tonight's Schedule

5:30-6:30 p.m. Open House

- Review the hearing handout, informational boards, design schematics, and Draft EA document.
- Visit with the project team at the exhibit boards, and Environmental table. The Draft EA is available for review at the Comments table.
- Visit TxDOT staff at the Right-of-Way (ROW) table for information about the ROW acquisition process.

6:30 p.m. Public Hearing

- Presentation
- Comment Session

How to Comment

- Write comments on the form in your packet and place in the comments box at this hearing.
- Mail written comments to the address provided on the comment form, postmarked by May 30, 2013.
- Email comments by May 30, 2013 to: hou-piowebmail@txdot.gov
- Sign up to speak during tonight's comment session. Sign up at the registration table. These guidelines will be used:
  - Speakers will be called in the order registered.
  - Comments are limited to 3 minutes; unused time may not be given to another speaker.
  - Comments should be relevant to the proposed US 59 project.

Bienvenido a la Audiencia Pública para la carretera US 59 desde Spur 10 hasta SH 99. El propósito de esta audiencia es para solicitar comentarios sobre el proyecto propuesto y el plan preliminar de la Evaluación Ambiental (EA).

Programa de Esta Noche

5:30-6:30 p.m. Forro Abierto

- Revise el folleto de la audiencia, tableros informativos, esquemas de diseño, y el documento preliminar del EA.
- Visite con el equipo del proyecto en los tableros de exhibición, y la mesa del Medio Ambiente. La evaluación ambiental preliminar está disponible para su consulta en la mesa de Medio Ambiente.
- Visite el personal de TxDOT en la mesa de Derecho de Vía (ROW) para obtener información sobre el proceso de adquisición de derecho de vía.

6:30 p.m. Audiencia Pública

- Presentación
- Sesión de comentarios

Cómo Realizar Un Comentario

- Escriba sus comentarios en el formulario en su paquete y colóquelo en la caja de comentarios en esta audiencia.
- Envíe sus comentarios por escrito a la dirección indicada en el formulario, con matasellos en o antes del 30 de mayo de 2013.
- Envié sus comentarios por correo electrónico en o antes del 30 de mayo de 2013 a: hou-piowebmail@txdot.gov
- Inscribirse para hablar durante la sesión de comentario de esta noche. Inscribirse en la mesa de registro. Estas guías se utilizarán:
  - Los participantes serán llamados en el orden de registro.
  - Comentarios están limitadas a 3 minutos, el tiempo no utilizado no puede ser dado a otro participante.
  - Comentarios deben ser relevantes al proyecto propuesto para la carretera US 59.

A public hearing summary report will be available at TxDOT's Houston District and Fort Bend Area offices and posted on TxDOT's website.
Un resumen del reporte de la audiencia pública estará disponible en las oficinas del Distrito de Houston de TxDOT y de la Área de Fort Bend y se publicará en el sitio de web de TxDOT - http://www.txdot.gov/inside-txdot/get-involved/about/hearings-meetings.html

Study Area / Área de Estudio

Fort Bend County

Limits: Spur 10 to SH 99

Existing Right-of-Way Width: 335 feet (usual)

Proposed Right-of-Way Width: Varies (335 feet to 540 feet)

Proposed Typical Sections: 6-Lane Facility with continuous 2-lane frontage roads (Spur 10 to FM 762); 8-Lane Facility plus 2 HOV lanes with continuous 2- to 3-lane frontage roads (FM 762 to SH 99)

Type of Facility: Rural/Urban Freeway, with all lanes to remain free

El Condado de Fort Bend

Límites: Spur 10 hasta SH 99

Amplitud de Derecho de Vía Existente: 335 pies (usual)

Amplitud de Derecho de Vía Propuesta: Varía (335 pies a 540 pies)

Secciones Típicas Propuestas: Instalación de 6 carriles principales con calles laterales continuas de 2 carriles (Spur 10 hasta FM 762); Instalación de 8 carriles principales y 2 carriles de HOV (vehículos de alta ocupación) con calles laterales continuas de 2 y 3 carriles (FM 762 hasta SH 99)

Tipo de Instalación: Autopista rural/urbana, con carriles para permanecer libre

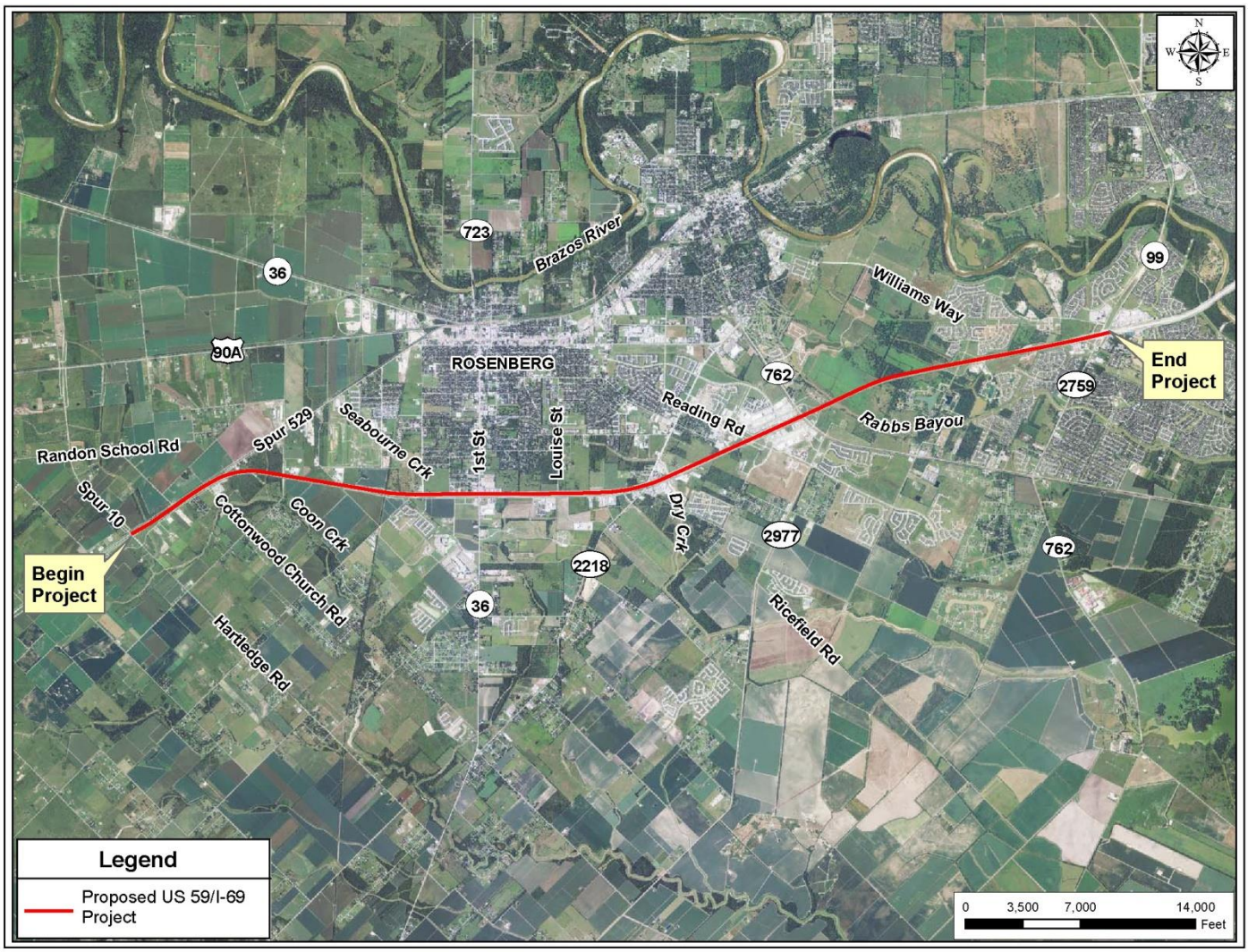

Typical Sections / Secciones Típicas

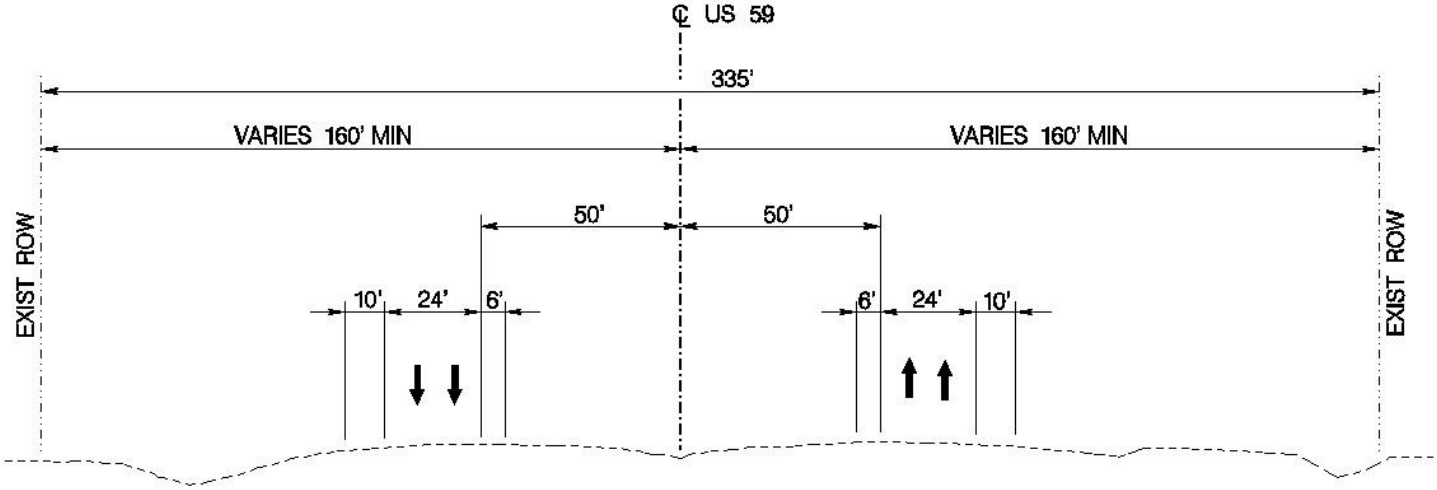

US 59 EXISTING TYPICAL SECTION
Spur 10 to SH 99

Existing Conditions / Condiciones Existentes

Spur 10 to SH 99 – 4 Main Lanes / Spur 10 hasta SH 99 - 4 carriles principales

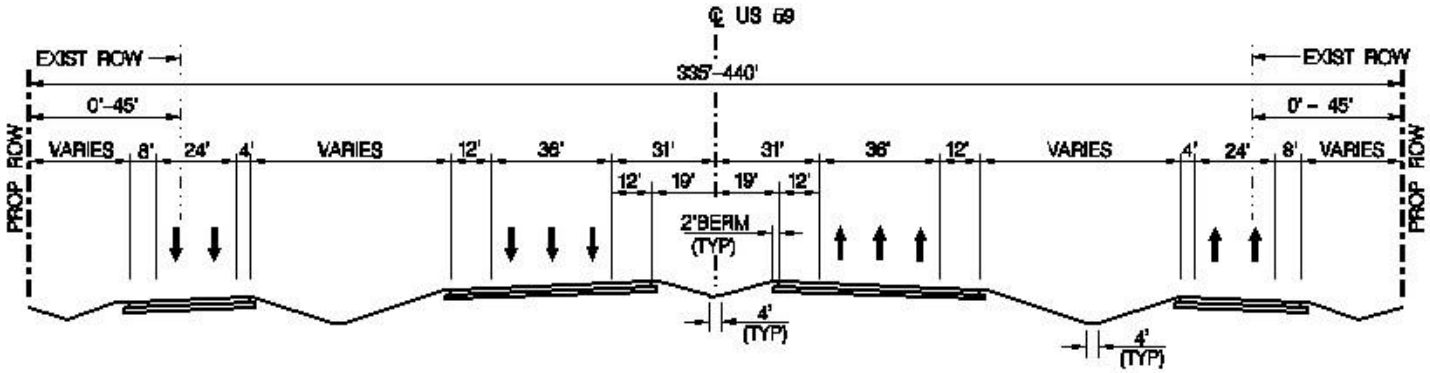

US 59 PROPOSED TYPICAL SECTION
Spur 10 to FM 762

Proposed Facility / Instalación Propuesta

Spur 10 to FM 762 – 6 Main Lanes / Spur 10 hasta FM 762 - 6 carriles principales

---

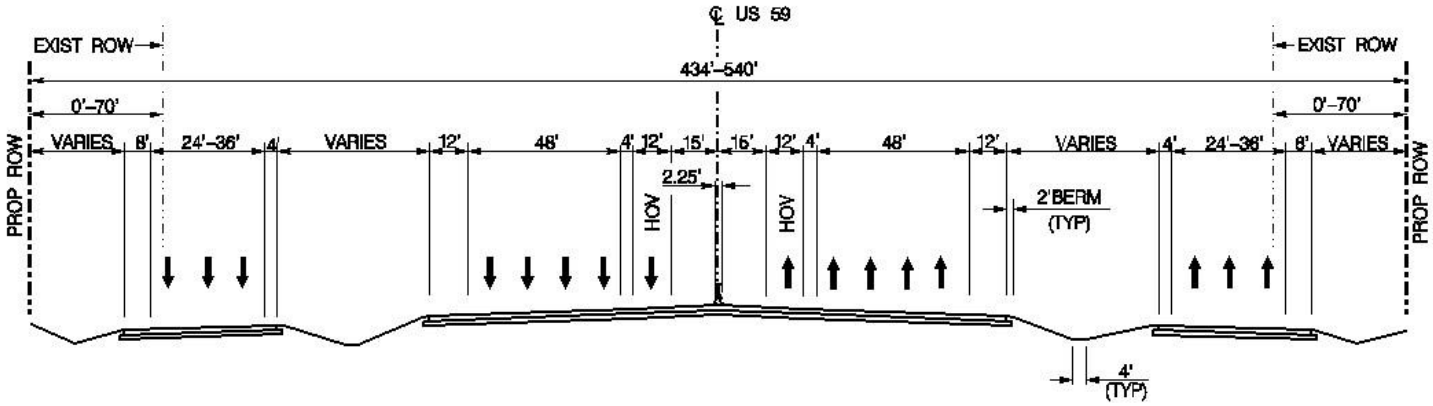

US 59 PROPOSED TYPICAL SECTION
FM 762 to SH 99

Proposed Facility / Instalación Propuesta

FM 762 to SH 99 – 8 Main Lanes and 2 HOV Lanes / FM 762 hasta SH 99 - 8 carriles principales y 2 carriles HOV

Environmental Process

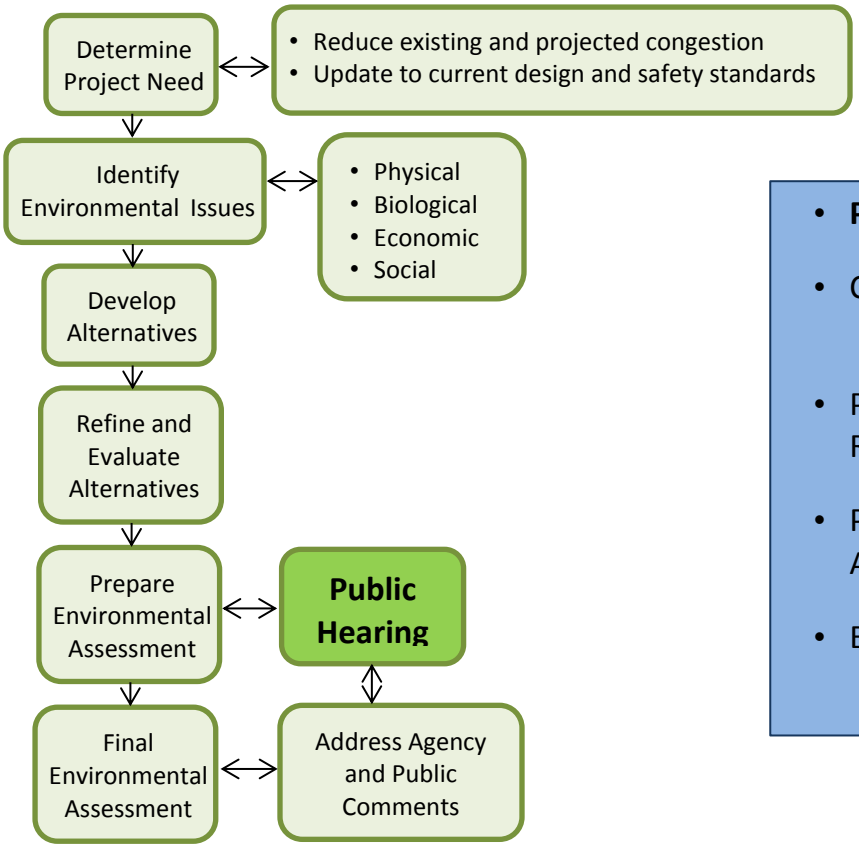

- **Public Hearing**
- Comment Period
  - May 30, 2013
- Prepare Public Hearing Summary Report
- Prepare Final Environmental Assessment
- Environmental Decision
  - Estimated Summer 2013

Proceso de Análisis Ambiental

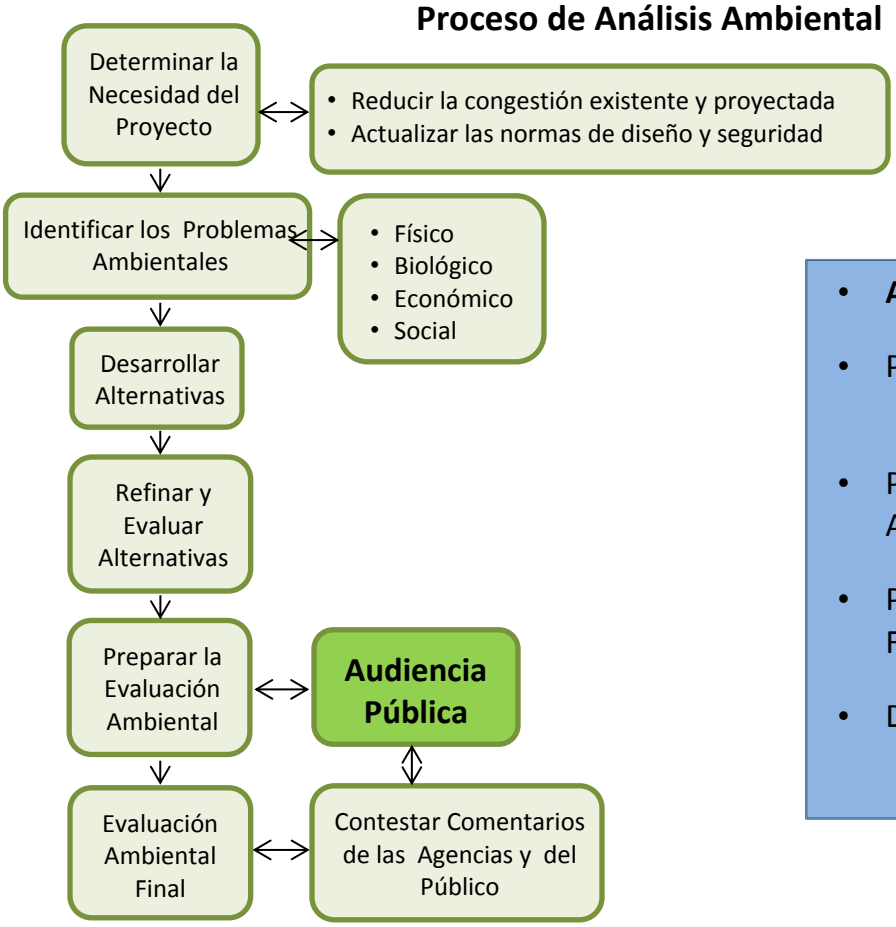

- **Audiencia Pública**
- Periodo de Comentarios
  - 30 de mayo 2013
- Preparar Reporte de Resumen de la Audiencia Pública
- Preparar la Evaluación Ambiental Final
- Decisiones Ambientales
  - Aproximadamente Verano de 2013

Implementation Timeline

- **Spur 10 to FM 762** – 6 general purpose (i.e., free) main lanes
  - Begin Construction – Spring of 2014
  - Operational by early 2017
- **FM 762 to SH 99** – 8 general purpose (i.e., free) main lanes and 2 HOV lanes
  - Begin Construction – Summer of 2014
  - Operational by Summer of 2017

Total Estimated Project Cost - $200 Million

Calendario de Implementación

- **Spur 10 hasta FM 762** – 6 carriles principales
  - Iniciar Construcción – Verano de 2014
  - Operacional para el principio de 2017
- **FM 762 hasta SH 99** – 8 carriles principales y 2 carriles de HOV
  - Iniciar Construcción – Primavera de 2014
  - Operacional para la Primavera de 2017

Estimado de Costos del Proyecto Total - $200 Millones

Texas Department of Transportation

US 59 / I-69
FROM SPUR 10 TO SH 99

WELCOME

PUBLIC HEARING

PRESENTED BY:

THE TEXAS DEPARTMENT OF TRANSPORTATION

MAY 16, 2013

TERRY HIGH SCHOOL

Berg♦Oliver Associates, Inc.

PURPOSE OF TONIGHT'S PUBLIC HEARING

- PRESENT THE PROPOSED PROJECT DESIGN AND RESULTS OF THE ENVIRONMENTAL STUDIES
- ALLOW THE PUBLIC TO SHARE COMMENTS ON THE PROPOSED PROJECT

* PROJECT TEAM IS AVAILABLE TO ANSWER QUESTIONS

Texas Department of Transportation

US 59 / I-69

FROM SPUR 10 TO SH 99

PROJECT VICINITY MAP

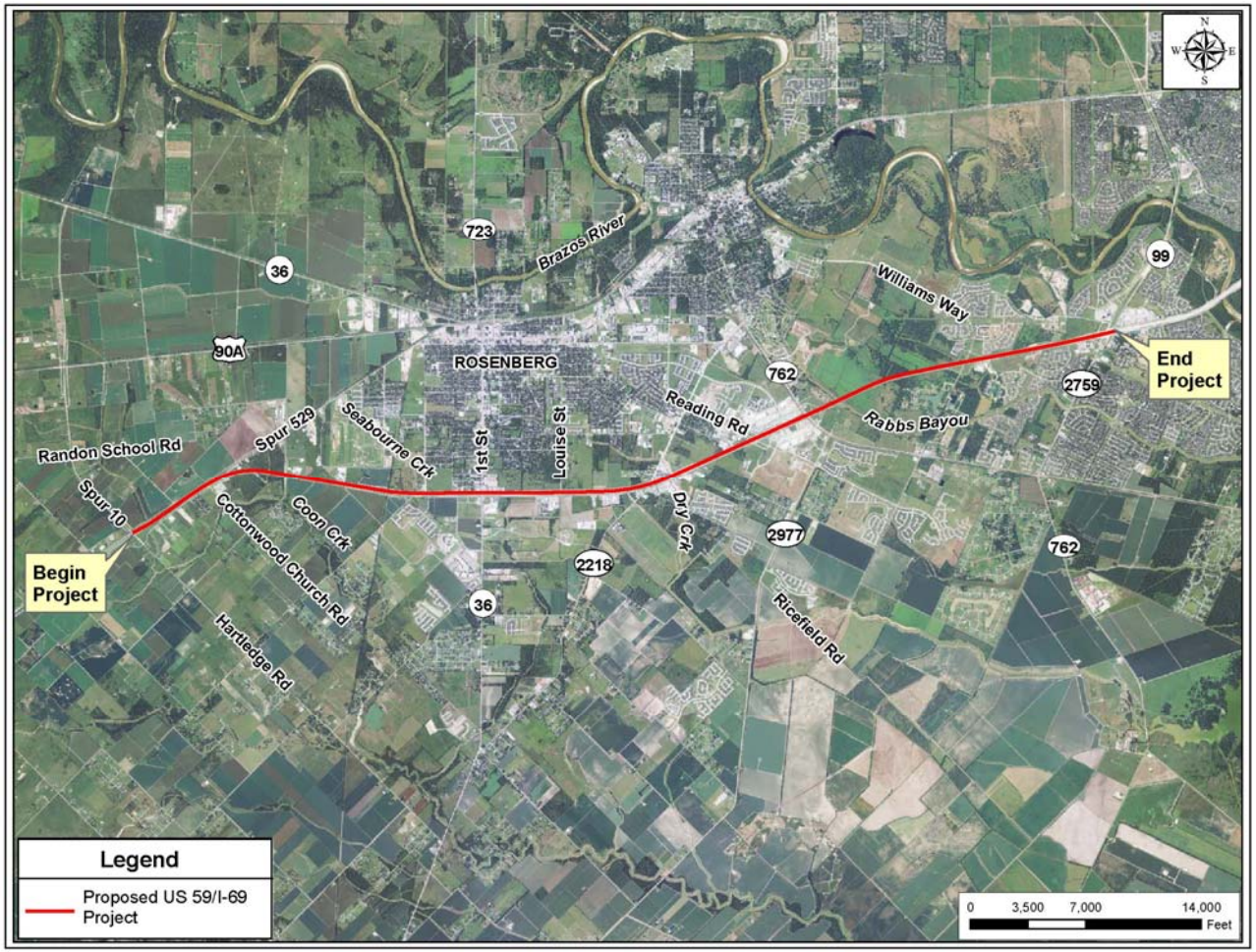

PROPOSED PROJECT DESCRIPTION

- **SPUR 10 TO FM 762:**
  - WIDEN TO 6-LANE RURAL FREEWAY
  - FRONTAGE ROADS
  - GRADE SEPARATIONS
  - OTHER IMPROVEMENTS

- **FM 762 TO SH 99:**
  - WIDEN TO 8 MAINLANES
  - 2 HOV LANES
  - FRONTAGE ROADS
  - GRADE SEPARATION
  - OTHER IMPROVEMENTS

EXISTING TYPICAL SECTION

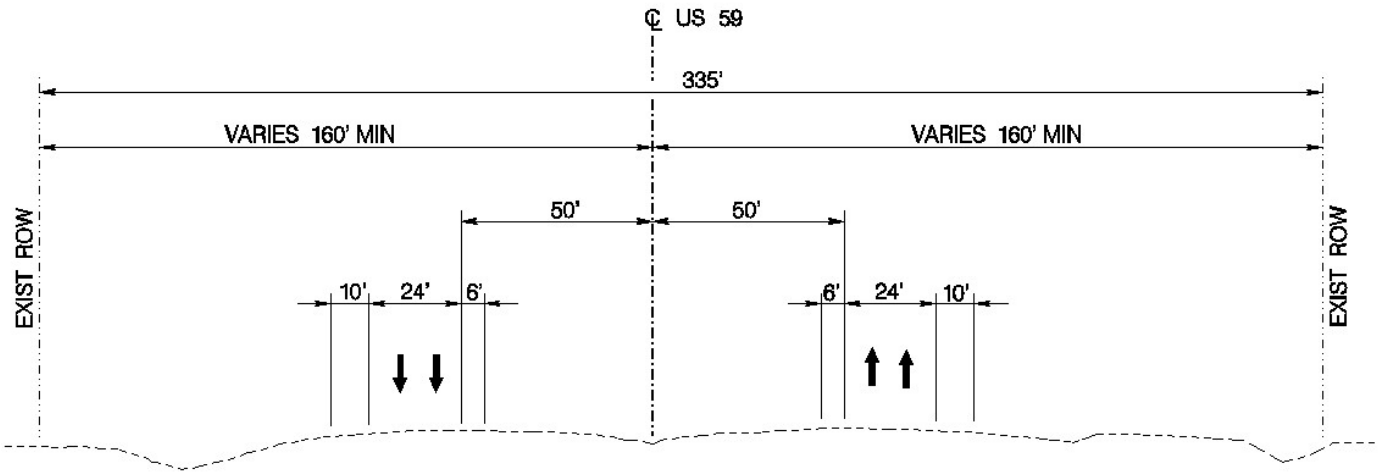

Spur 10 to SH 99

Texas Department of Transportation

US 59 / I-69

FROM SPUR 10 TO SH 99

PROPOSED TYPICAL SECTIONS

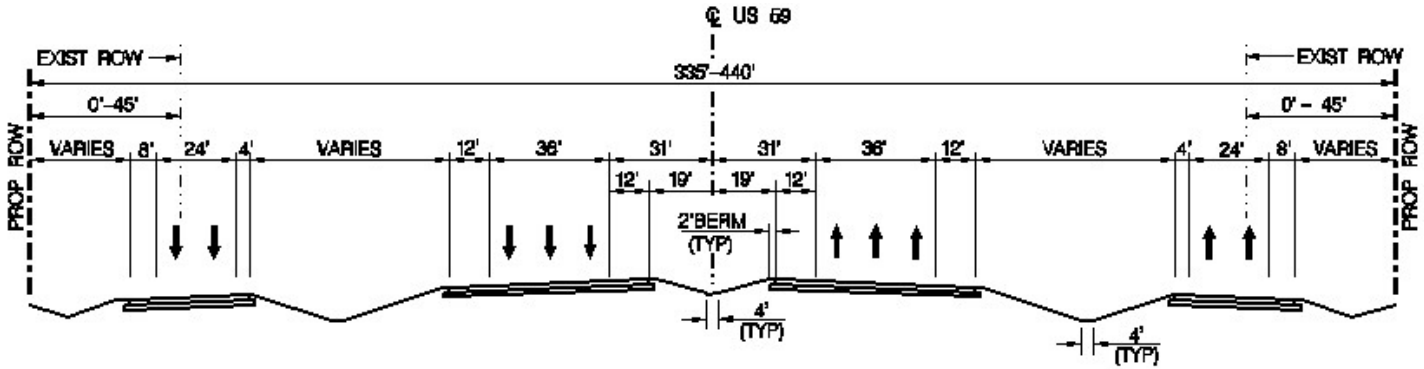

Spur 10 to FM 762

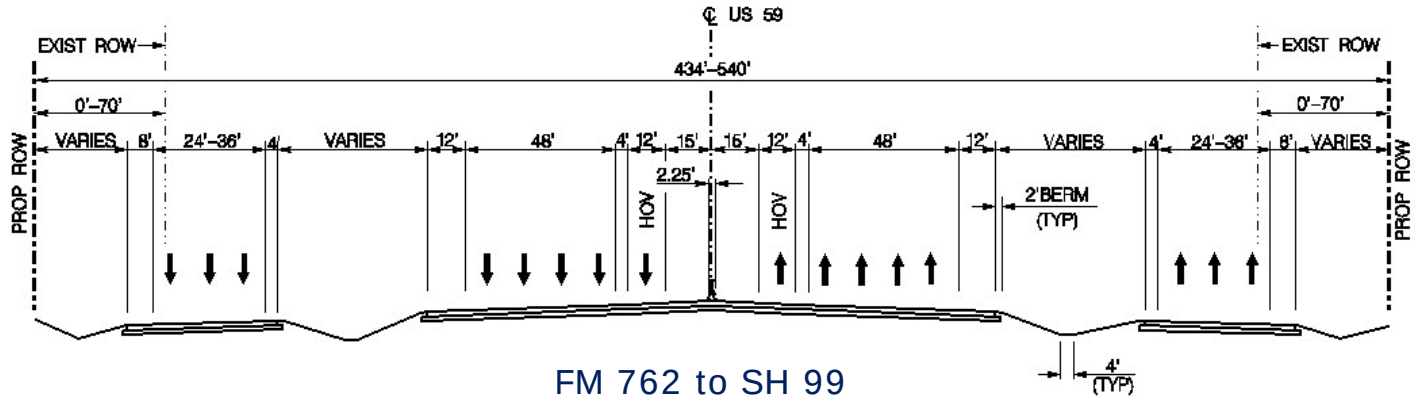

FM 762 to SH 99

NEED AND PURPOSE FOR THE PROPOSED PROJECT

THE NEEDS INCLUDE:

- REDUCE EXISTING AND PROJECTED CONGESTION
- UPDATE US 59 TO CURRENT INTERSTATE DESIGN & SAFETY STANDARDS

THE PURPOSES INCLUDE:

- IMPROVE OVERALL DRIVING CONDITIONS WITHIN THE CORRIDOR
- STANDARDIZE THE FACILITY
- PROVIDE CONTINUITY TO THE REGIONAL HIGHWAY DESIGN AND NETWORK

AVERAGE ANNUAL DAILY TRAFFIC (AADT) VOLUMES

LIMITS	2013 AADT	2033 AADT	INCREASE
SPUR 10 TO FM 762	38,300	53,500	40%
FM 762 TO SH 99	76,710	110,810	44%

IMPLEMENTATION TIMELINE

- **SPUR 10 TO FM 762:**
  - BEGIN CONSTRUCTION: SPRING OF 2014
  - DURATION: ~ 3 YEARS
  - CONSTRUCTION COMPLETION: EARLY 2017

- **FM 762 TO SH 99:**
  - BEGIN CONSTRUCTION: SUMMER OF 2014
  - DURATION: ~ 3 YEARS
  - CONSTRUCTION COMPLETION: SUMMER OF 2017

Texas Department of Transportation

US 59 / I-69
FROM SPUR 10 TO SH 99

PROVIDE US FEEDBACK

Written Comments:

- Comment forms are available at the Sign-In Table and the Written Comment Station
- Mailing address provided on comment forms
- Comment forms may be scanned and submitted electronically to: hou-piowebmail@txdot.gov
- All comment forms must be postmarked or emailed by May 30, 2013
- All written statements will be addressed in, and made part of, a public hearing summary report to be available Summer 2013 at the Houston District Office, 7600 Washington Avenue, Houston, Texas, 77007 and the TxDOT Houston District Office's web page, http://www.txdot.gov

A HANDOUT FOR THIS PROJECT IS AVAILABLE AT THE SIGN-IN TABLE

WELCOME

U.S. Highway 59 Public Hearing

Proposed Improvements from Spur 10 to State Highway 99

May 16, 2013

Texas Department of Transportation

WELCOME

U.S. Highway 59 Public Hearing

Proposed Improvements from Spur 10 to State Highway 99

May 16, 2013

Texas Department of Transportation

Elected Officials

Texas Department of Transportation

PUBLIC HEARING LEGAL NOTICES

- ***Houston Chronicle***
  - **April 16 and May 6, 2013**
- ***Fort Bend Herald***
  - **April 16 and May 6, 2013**
- ***Las Noticias de Fort Bend***
  - **April 16 and May 7, 2013**

Texas Department of Transportation

REVIEW INFORMATION

TxDOT Houston District Office

7600 Washington Avenue
Houston, TX 77077

TxDOT Fort Bend Area Office

4235 SH 36
Rosenberg, TX 77471

TxDOT Website

http://www.txdot.gov/inside-txdot/get-involved/about/hearings-meetings.html

Texas Department of Transportation

SPEAKER INTRODUCTIONS

Project Description & Design

Manny Francisco
Project Manager
TxDOT Houston District

Environmental Studies

Amy M. Brook
Sr. Associate
Berg♦Oliver Associates, Inc.

Texas Department of Transportation

PROPOSED US 59 / I-69 PROJECT LIMITS

Spur 10 to SH 99

Fort Bend County

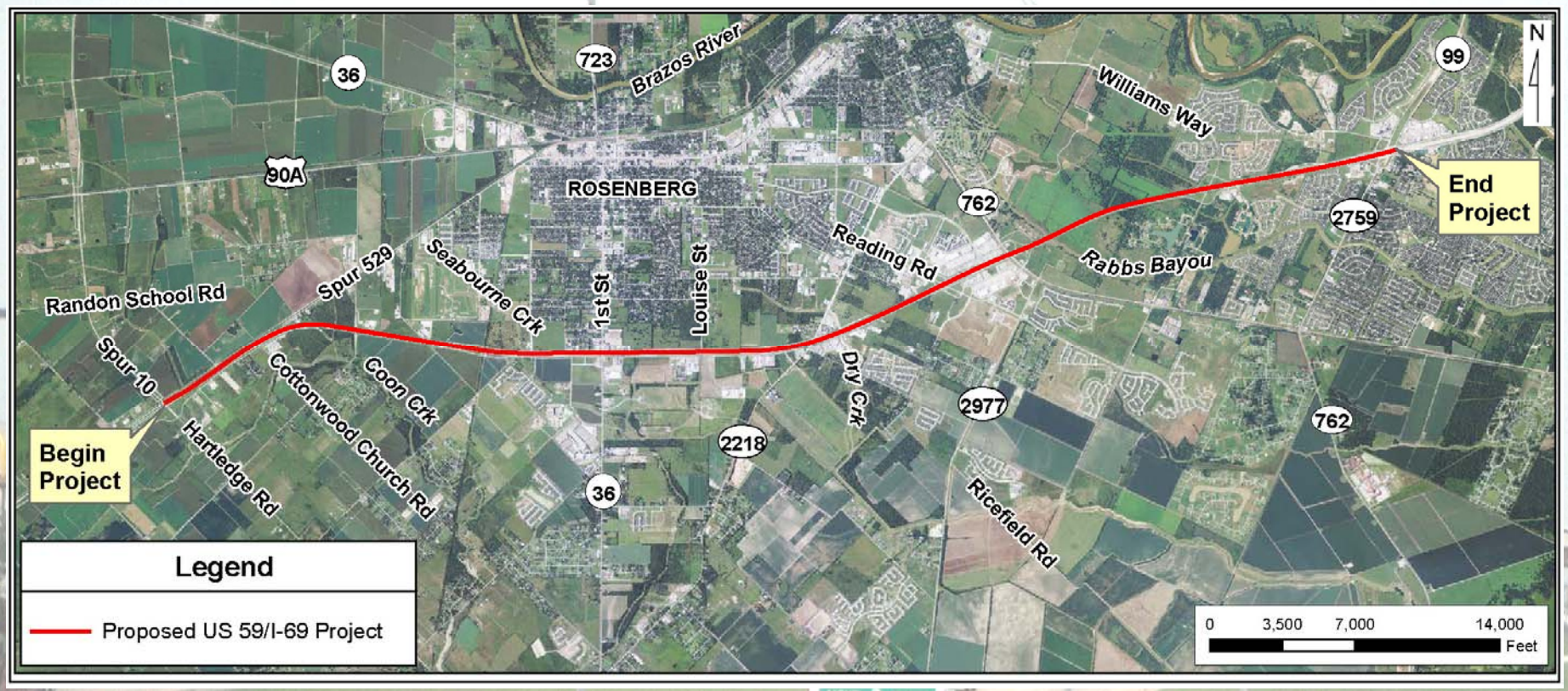

PROJECT DESIGN

- Spur 10 to FM 762: Widen to 6-lane Rural freeway, frontage roads, grade separations, and other improvements
- FM 762 to SH 99: Widen to 8 main lanes, 2 HOV lanes, frontage roads, grade separations, and other improvements
- Estimated Total Cost of $200M
- Construction phasing: Phase I - Spur 10 to FM 762

  Phase II - FM 762 to SH 99

Texas Department of Transportation

PROJECT DESIGN - Existing

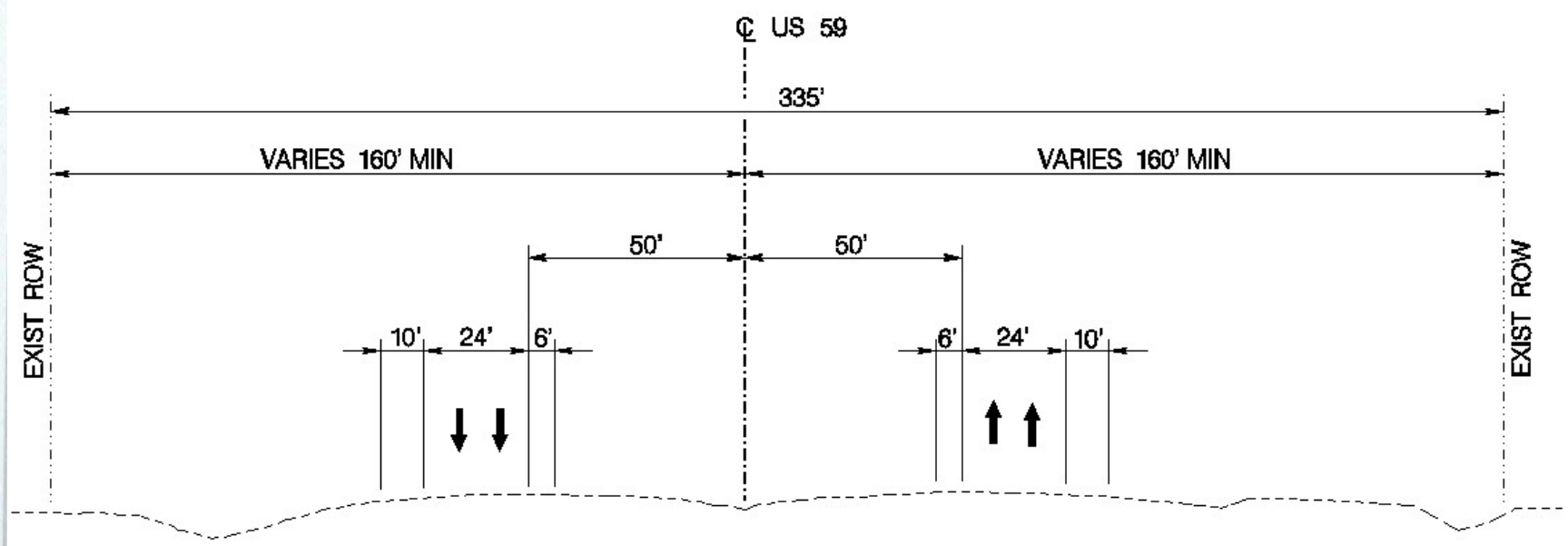

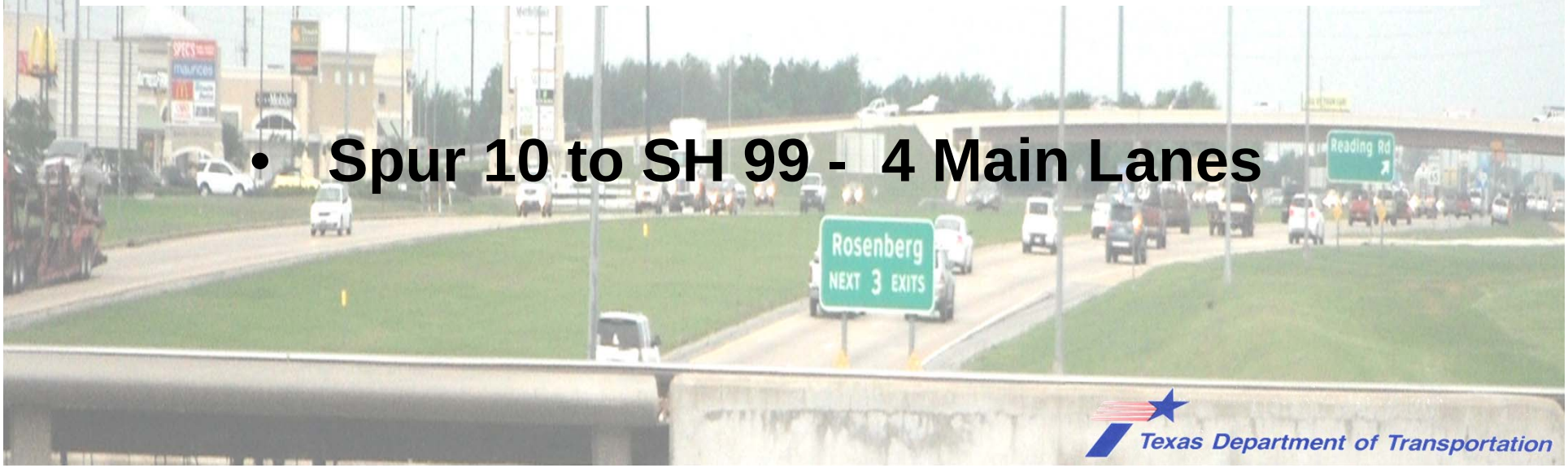

- **Spur 10 to SH 99 - 4 Main Lanes**

Texas Department of Transportation

PROJECT DESIGN - Proposed

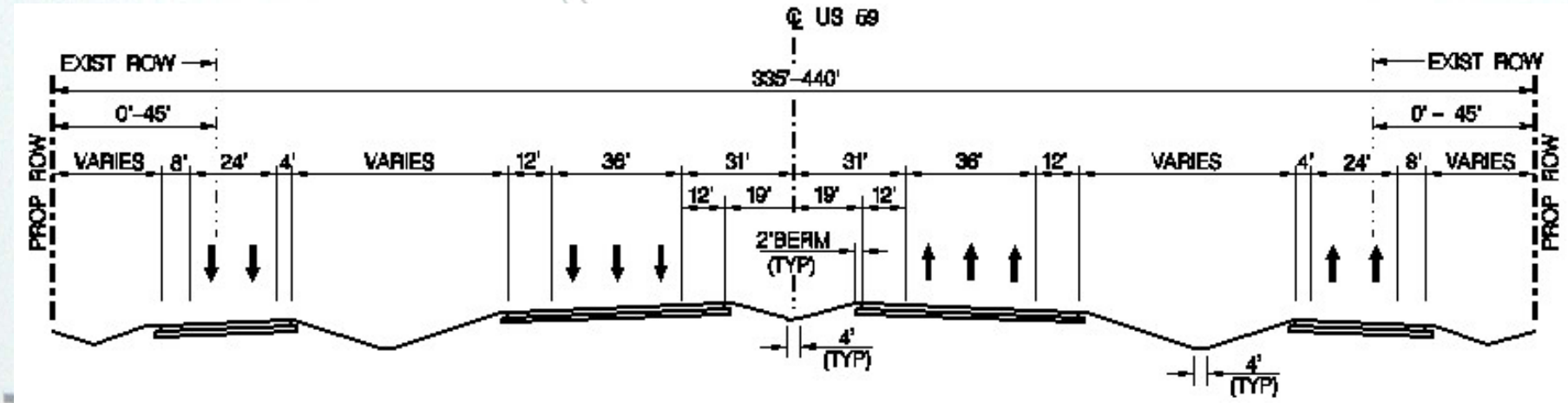

PHASE I

- **Spur 10 to FM 762 - 6 Main Lanes**

Texas Department of Transportation

PROJECT DESIGN - Proposed

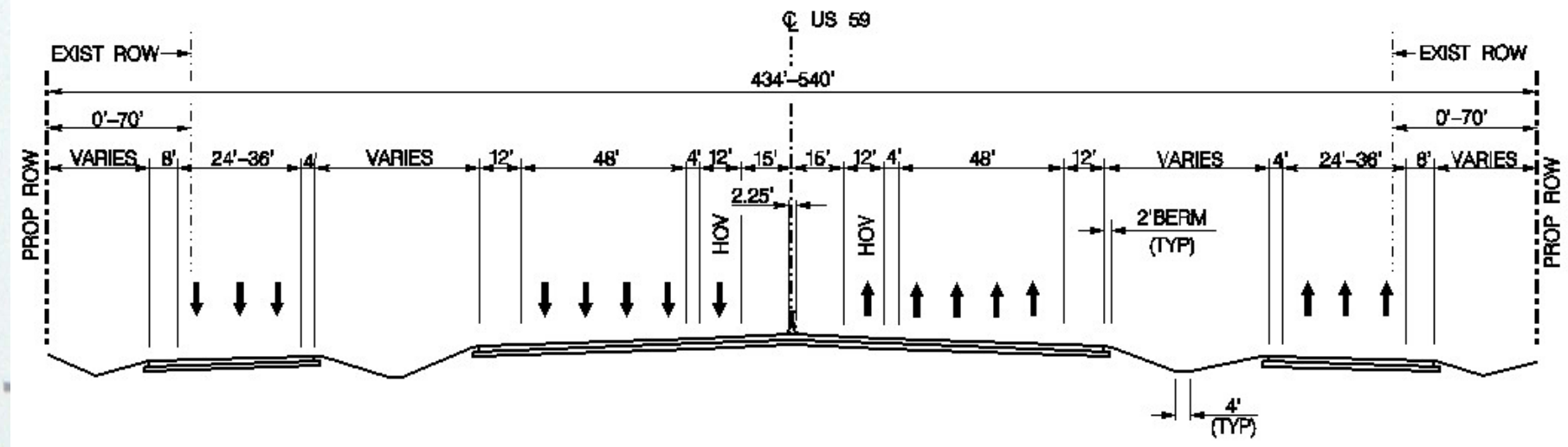

PHASE II

- **FM 762 to SH 99 - 8 Main Lanes, 2 HOV Lanes**

Texas Department of Transportation

PROJECT DESIGN - Proposed

❖ **Other Proposed Improvements include:**

- Upgrade of existing intersections
- Bicycle accommodations along 8-foot frontage road shoulder
- Pedestrian accommodations at intersections

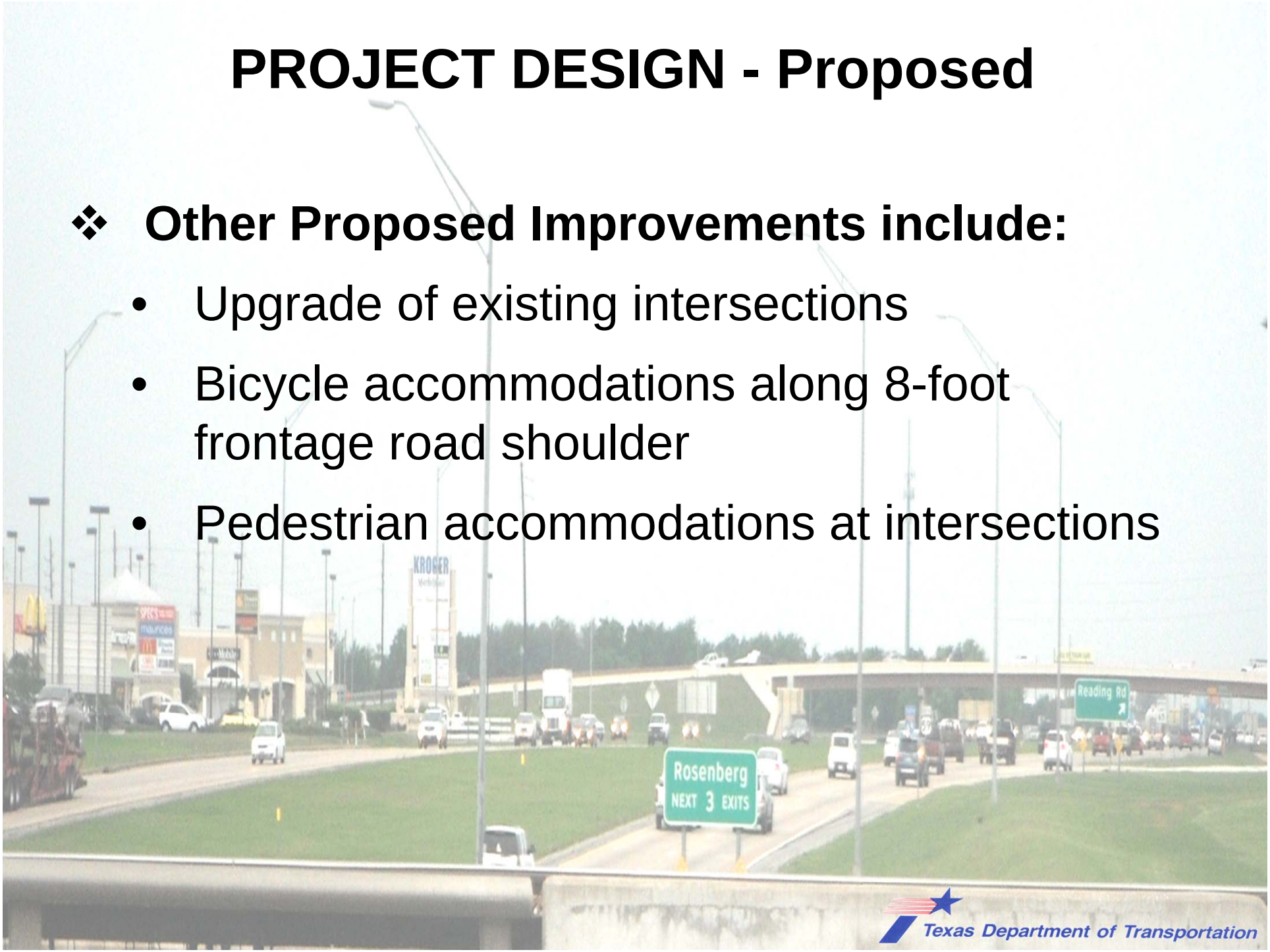

Texas Department of Transportation

IMPLEMENTATION TIMELINE

- **Spur 10 to FM 762 :**
  - Begin Construction: Spring of 2014
  - Duration: ~ 3 years
  - Construction Completion: Early 2017
- **FM 762 to SH 99 :**
  - Begin Construction: Summer of 2014
  - Duration: ~ 3 years
  - Construction Completion: Summer of 2017

Texas Department of Transportation

DRAFT ENVIRONMENTAL ASSESSMENT

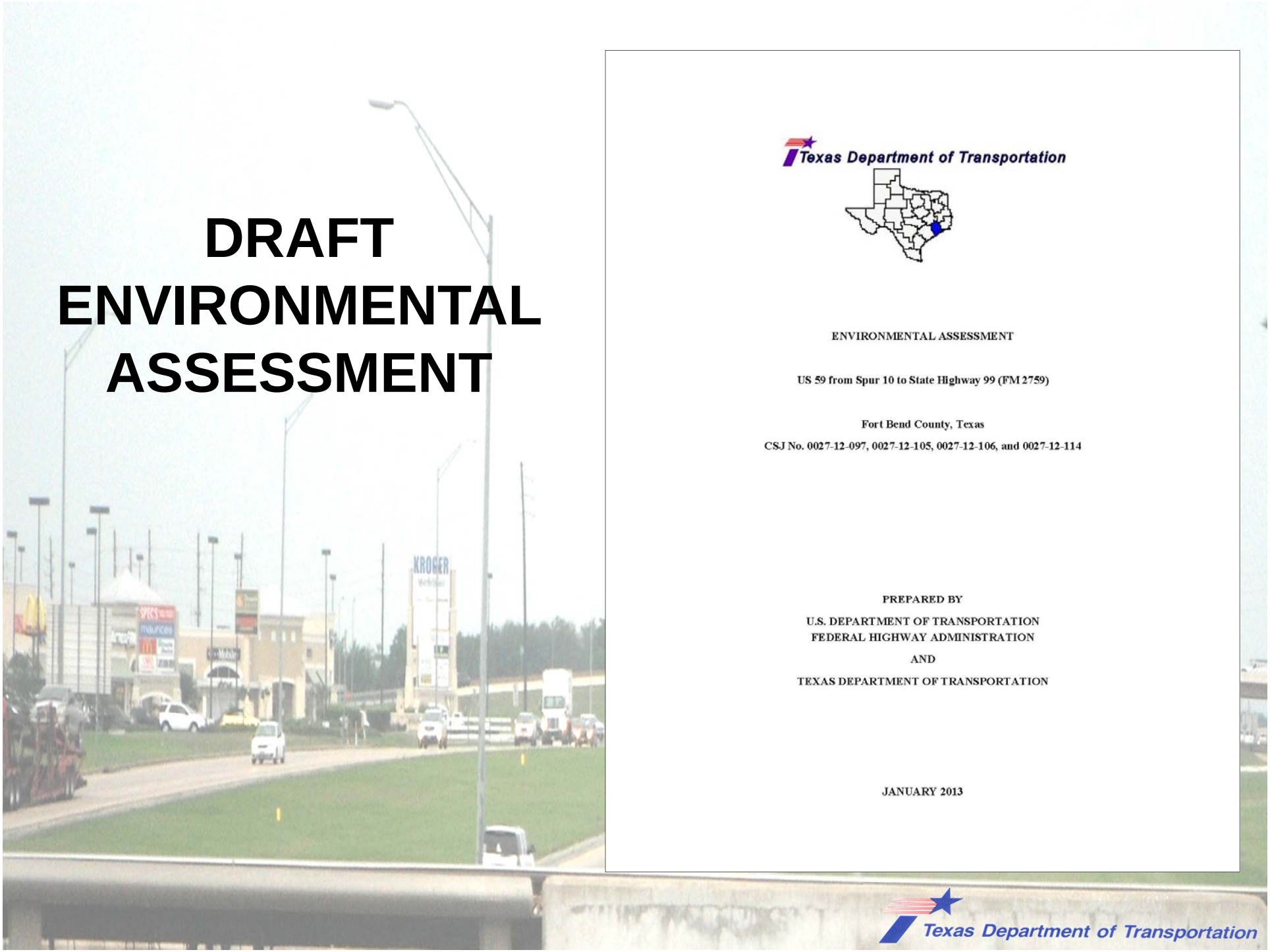

Texas Department of Transportation

ENVIRONMENTAL ASSESSMENT

US 59 from Spur 10 to State Highway 99 (FM 2759)

Fort Bend County, Texas

CSJ No. 0027-12-097, 0027-12-105, 0027-12-106, and 0027-12-114

PREPARED BY

U.S. DEPARTMENT OF TRANSPORTATION
FEDERAL HIGHWAY ADMINISTRATION

AND

TEXAS DEPARTMENT OF TRANSPORTATION

JANUARY 2013

Texas Department of Transportation

NEED FOR PROPOSED IMPROVEMENTS

- **The Proposed Improvements Need to be Implemented to:**
  - Reduce existing and projected congestion
  - Update US 59 to current interstate design and safety standards

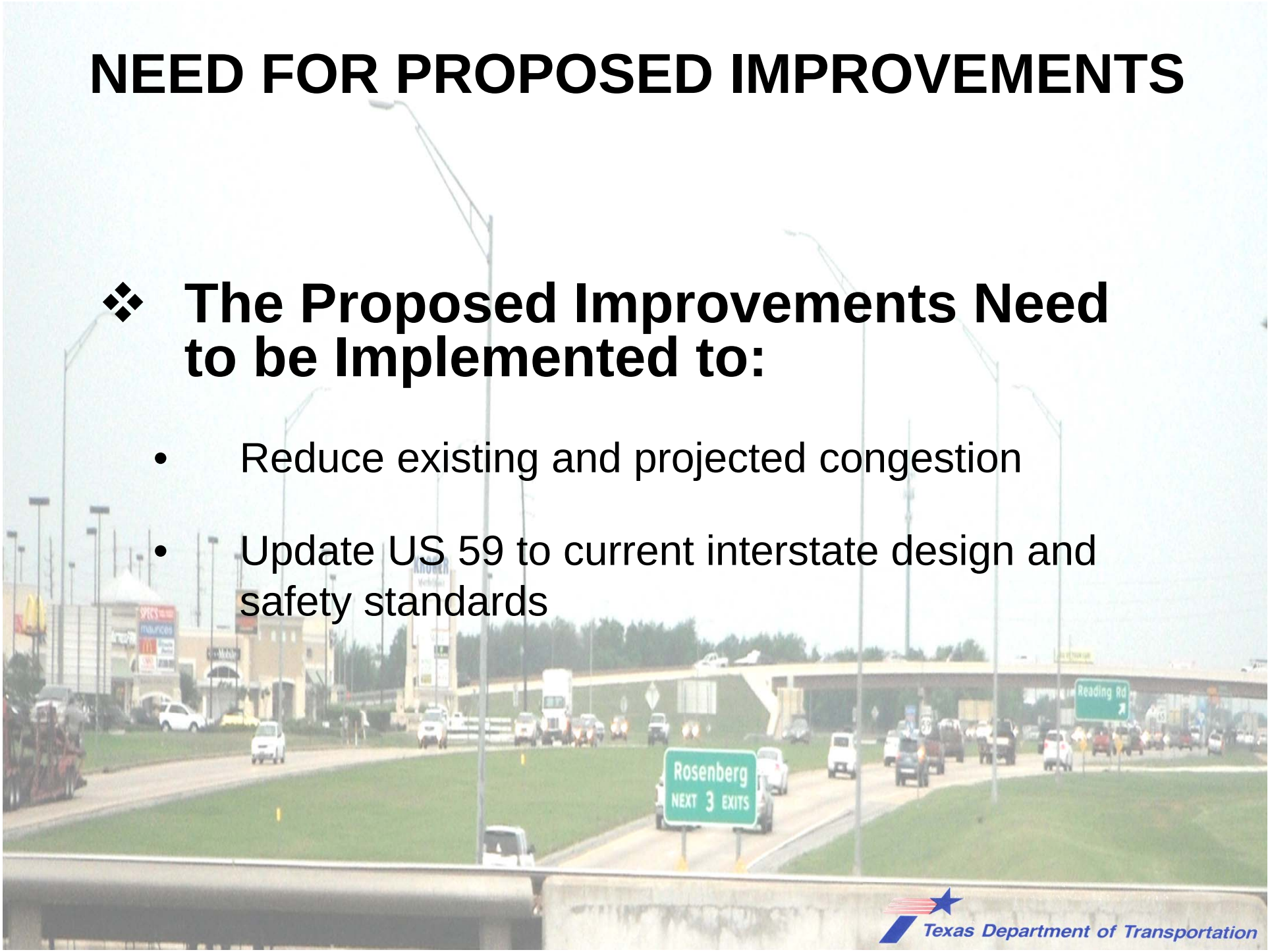

Texas Department of Transportation

PURPOSE OF PROPOSED IMPROVEMENTS

❖ **The Purpose of the Proposed Project is to:**

- Improve overall driving conditions within the corridor
- Standardize the facility
- Provide continuity to the regional highway design and network

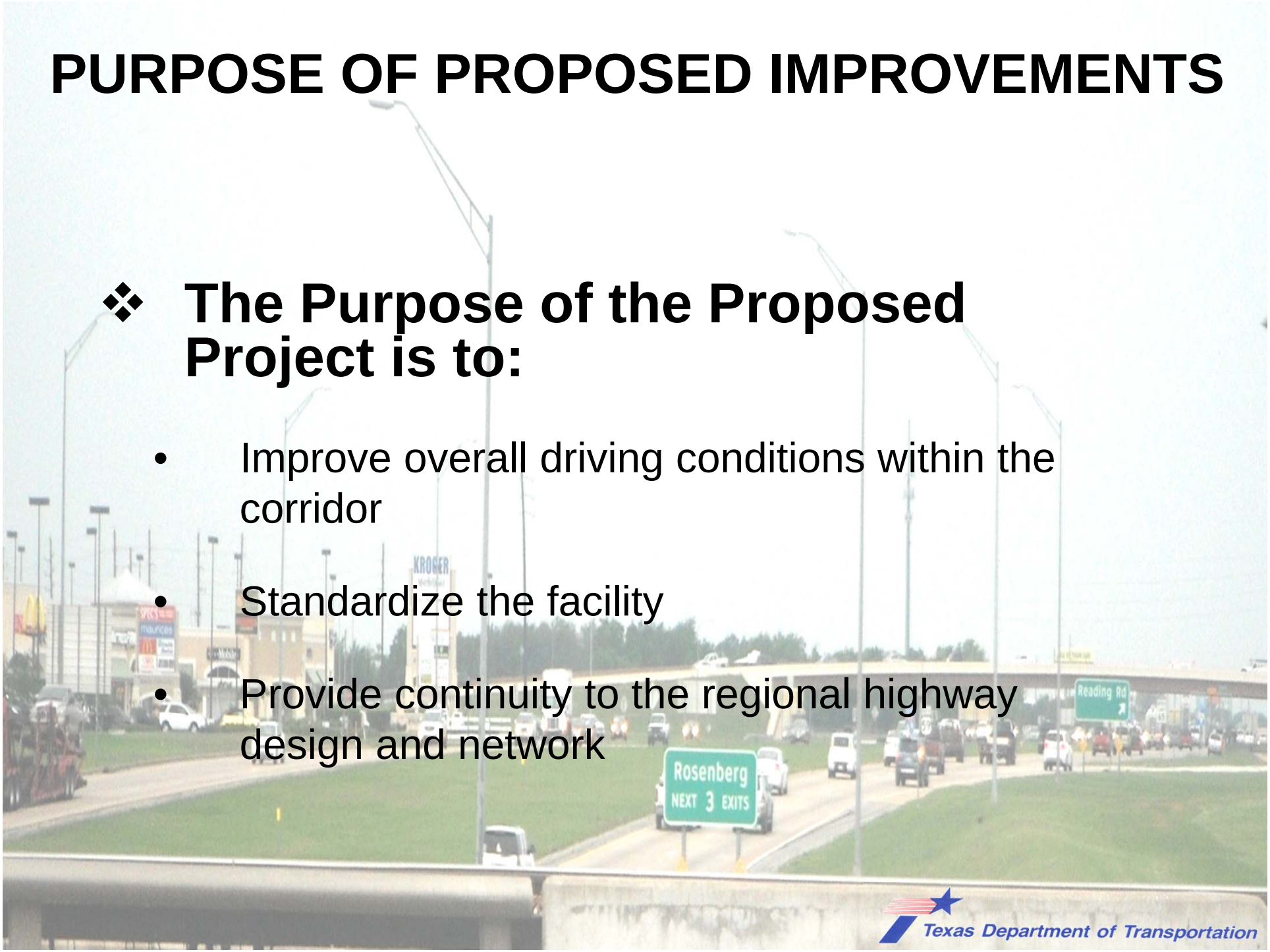

Texas Department of Transportation

ALTERNATIVES CONSIDERED

- ❖ **NO-BUILD ALTERNATIVE**
- ❖ **BUILD ALTERNATIVE**
  - **Schematic design alternatives were developed and evaluated**
  - **Avoids and/or minimizes potential adverse impacts**

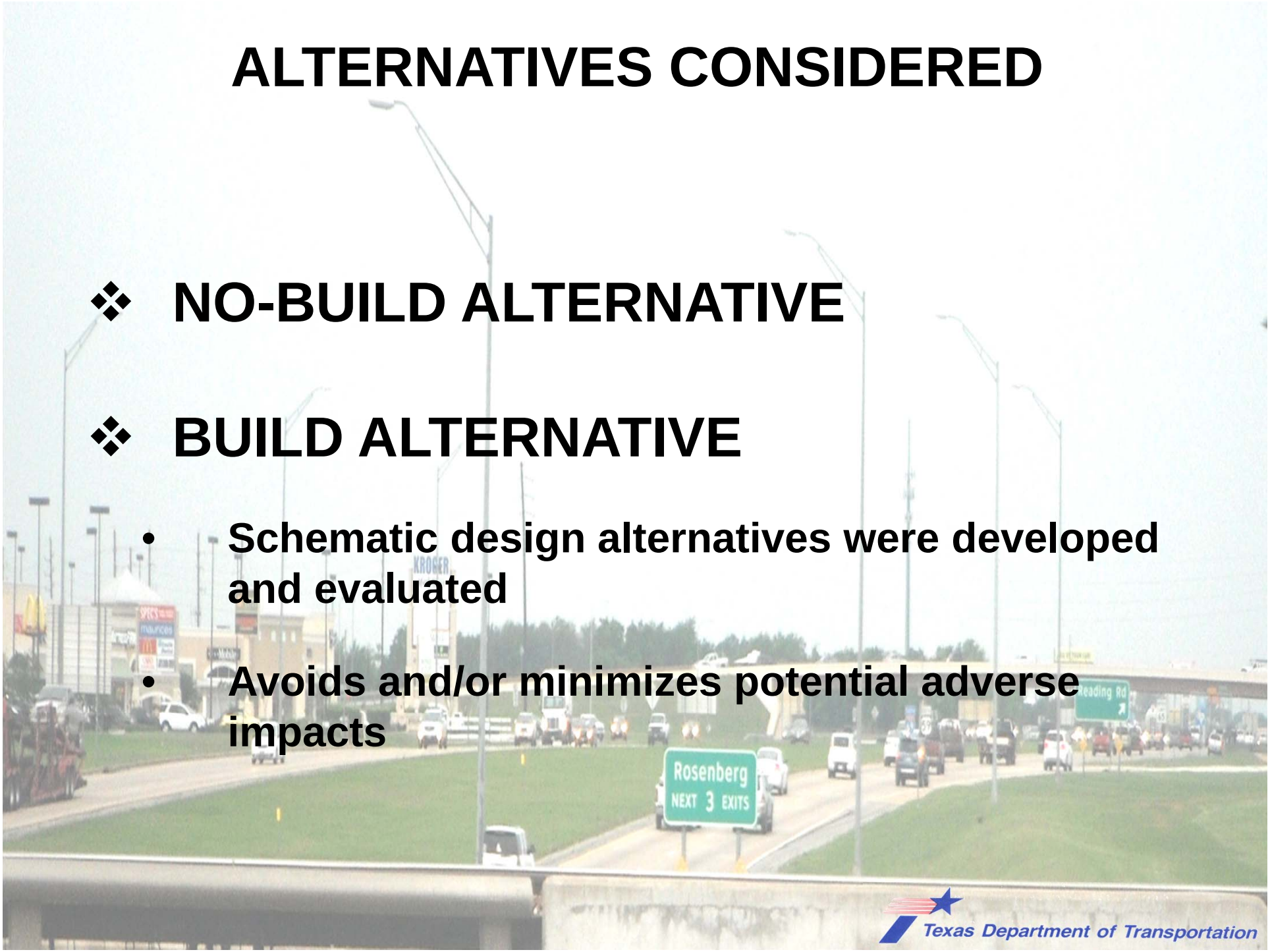

Texas Department of Transportation

ENVIRONMENTAL CONSIDERATIONS

- Land Use
- Soils and Farmland
- Social Resources
  - Community Cohesion
  - Displacements and Relocations
  - Environmental Justice
- Economics
- Pedestrians and Bicycles
- Air Quality
- Noise
- Water Quality
- Wetlands/Waters of the U.S.
- Floodplains
- Vegetation and Wildlife
- Threatened and Endangered Species
- Cultural Resources
  - Archeological Site
  - Historic Resources
- Hazardous Materials
- Visual and Aesthetic Qualities
- Indirect and Cumulative Impacts

Texas Department of Transportation

ENVIRONMENTAL CONSIDERATIONS

- **Land Use**
- **Social Resources**
  - **Displacements and Relocations**
- Noise
- Wetlands/Waters of the U.S.
- Floodplains
- Vegetation and Wildlife
- Hazardous Materials
- Indirect and Cumulative Impacts

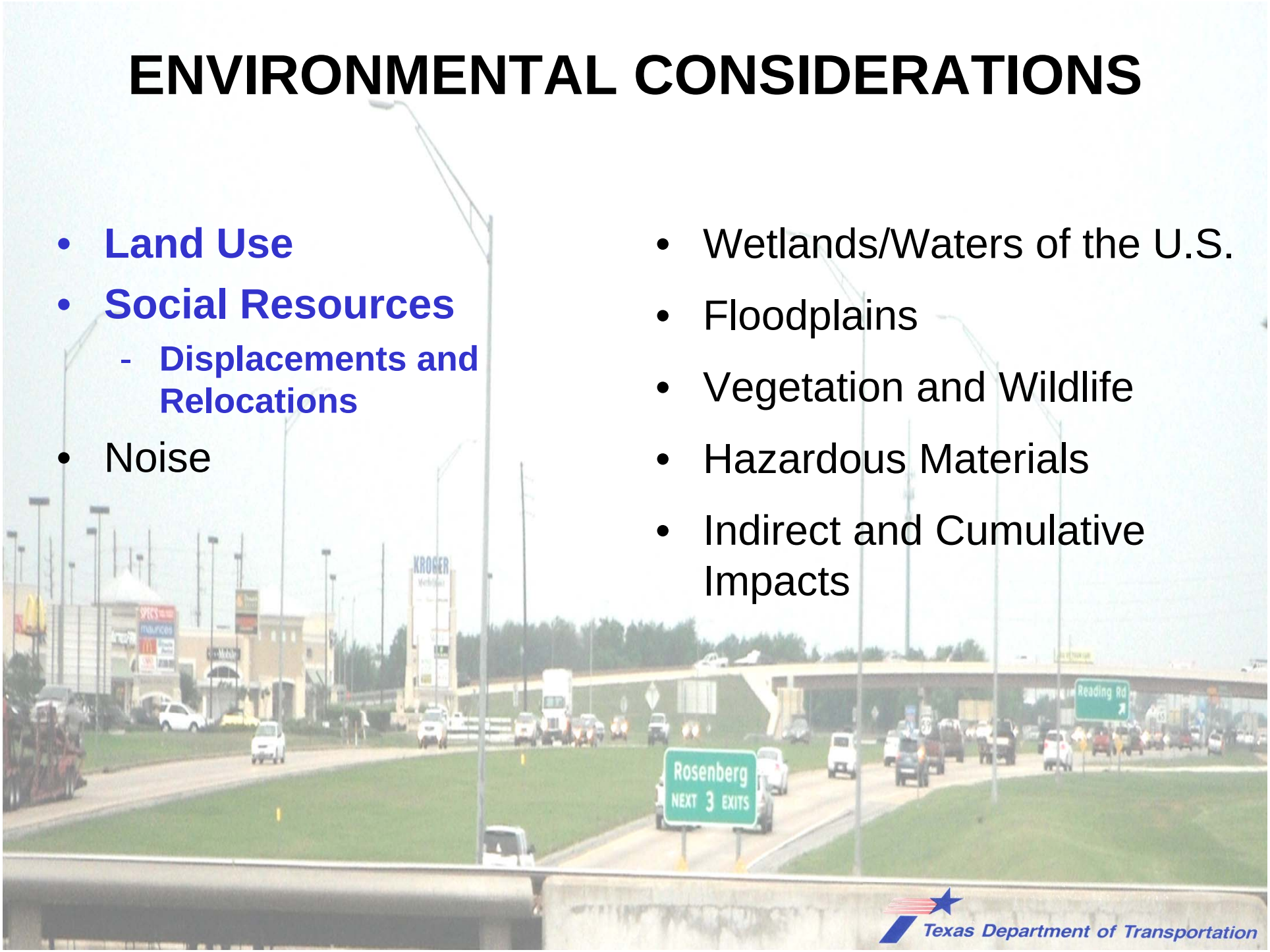

Texas Department of Transportation

ENVIRONMENTAL CONSIDERATIONS

- Land Use
- Social Resources
  - Displacements and Relocations
- **Noise**
- Wetlands/Waters of the U.S.
- Floodplains
- Vegetation and Wildlife
- Hazardous Materials
- Indirect and Cumulative Impacts

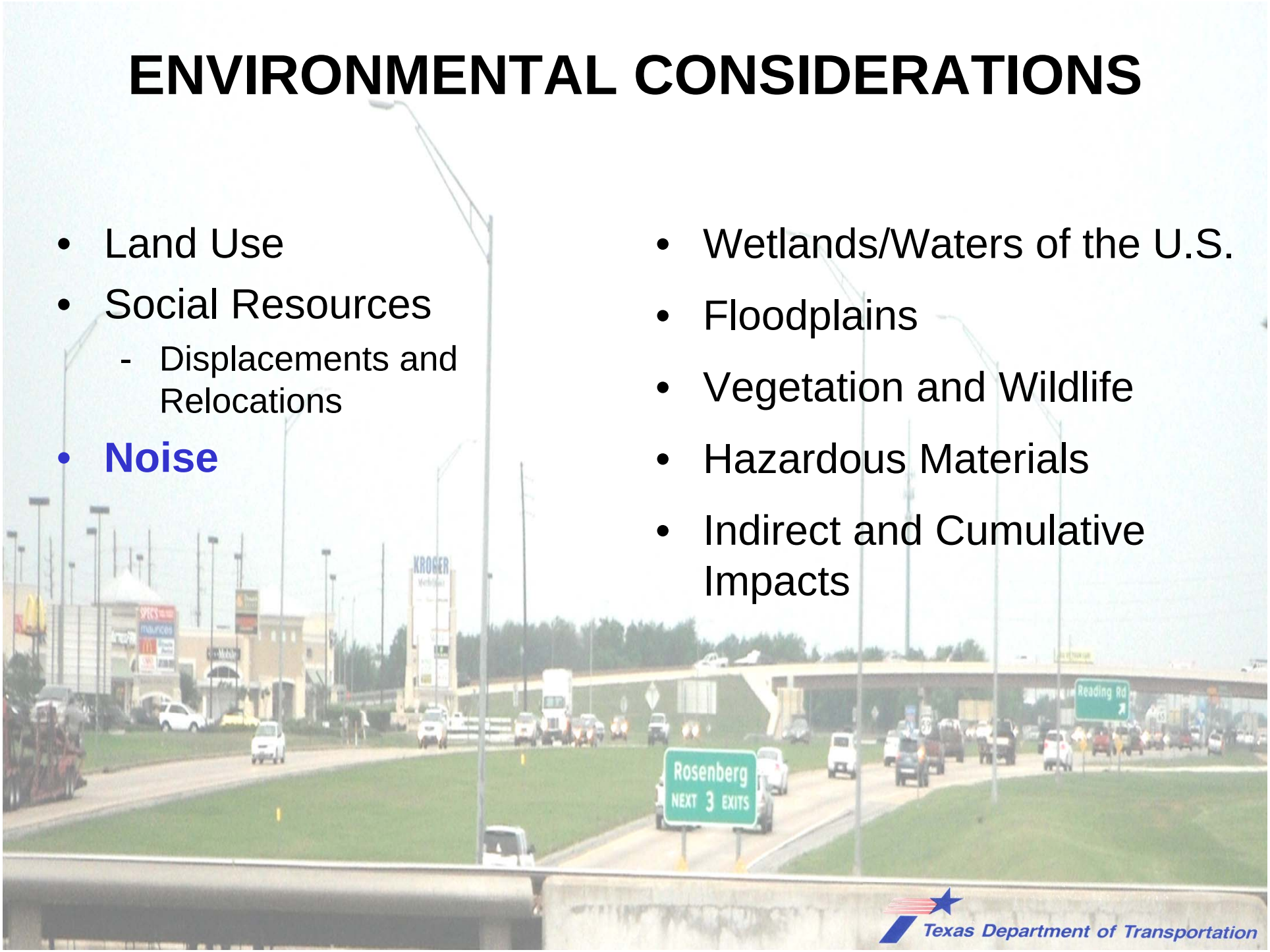

Texas Department of Transportation

ENVIRONMENTAL CONSIDERATIONS

- Land Use
- Social Resources
  - Displacements and Relocations
- Noise
- **Wetlands/Waters of the U.S.**
- **Floodplains**
- Vegetation and Wildlife
- Hazardous Materials
- Indirect and Cumulative Impacts

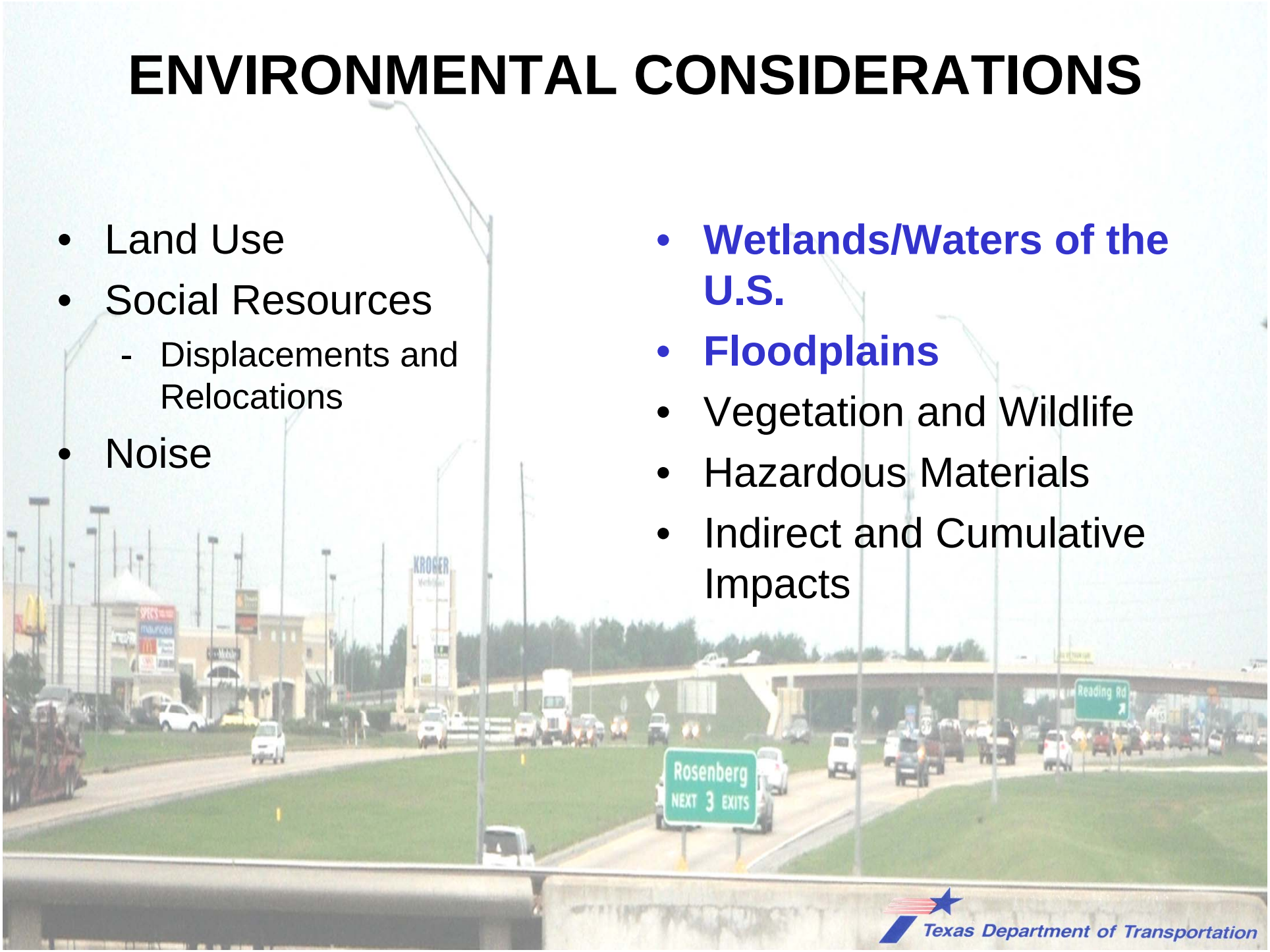

Texas Department of Transportation

ENVIRONMENTAL CONSIDERATIONS

- Land Use
- Social Resources
  - Displacements and Relocations
- Noise
- Wetlands/Waters of the U.S.
- Floodplains
- **Vegetation and Wildlife**
- Hazardous Materials
- Indirect and Cumulative Impacts

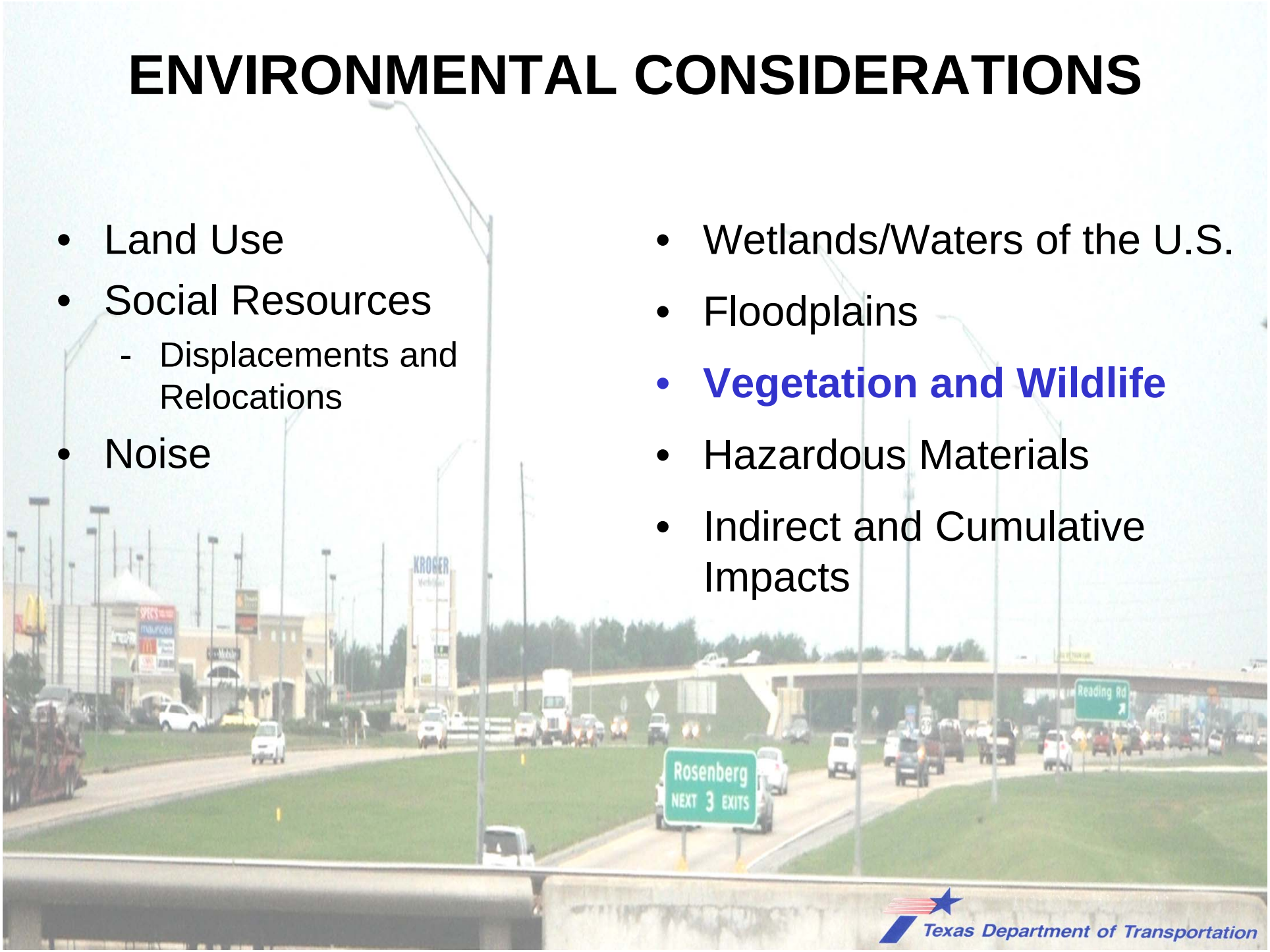

Texas Department of Transportation

ENVIRONMENTAL CONSIDERATIONS

- Land Use
- Social Resources
  - Displacements and Relocations
- Noise
- Wetlands/Waters of the U.S.
- Floodplains
- Vegetation and Wildlife
- **Hazardous Materials**
- Indirect and Cumulative Impacts

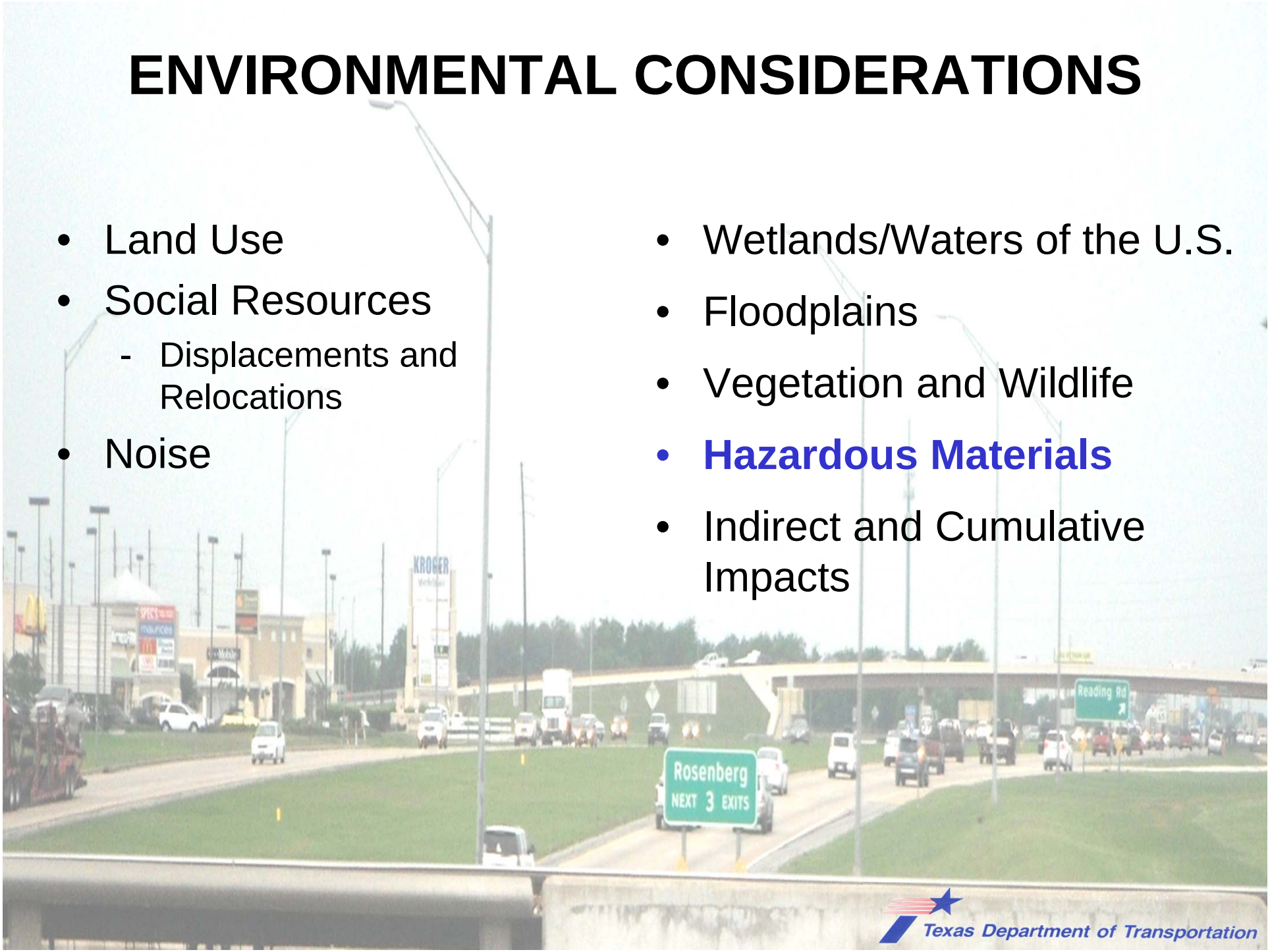

Texas Department of Transportation

ENVIRONMENTAL CONSIDERATIONS

- Land Use
- Social Resources
  - Displacements and Relocations
- Noise
- Wetlands/Waters of the U.S.
- Floodplains
- Vegetation and Wildlife
- Hazardous Materials
- **Indirect and Cumulative Impacts**

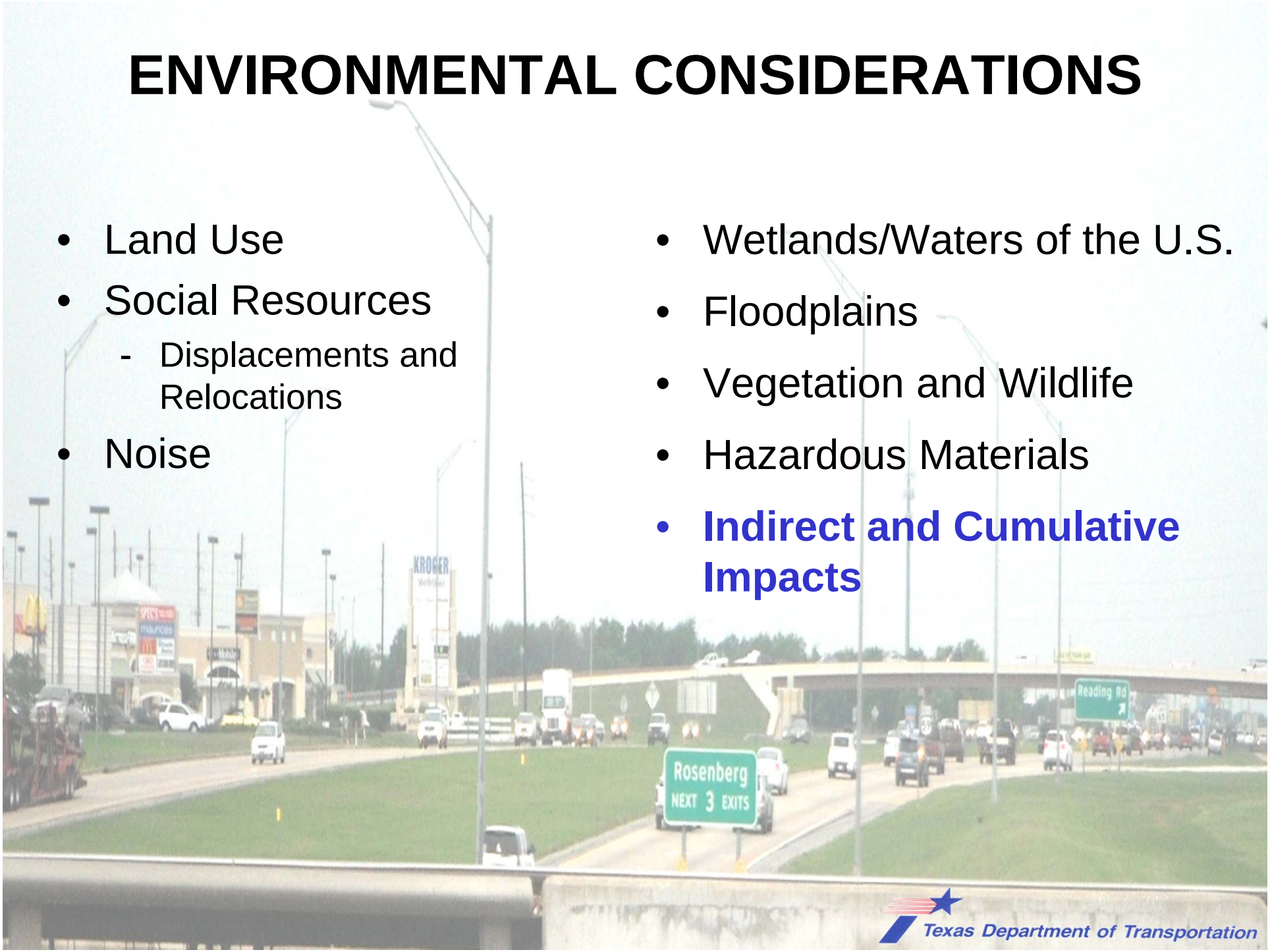

Texas Department of Transportation

STAKEHOLDER COORDINATION

- U.S. Army Corps of Engineers
- Texas Parks and Wildlife Department
- Texas Historical Commission
- Native American Tribes
- Fort Bend County
- City of Rosenberg

Texas Department of Transportation

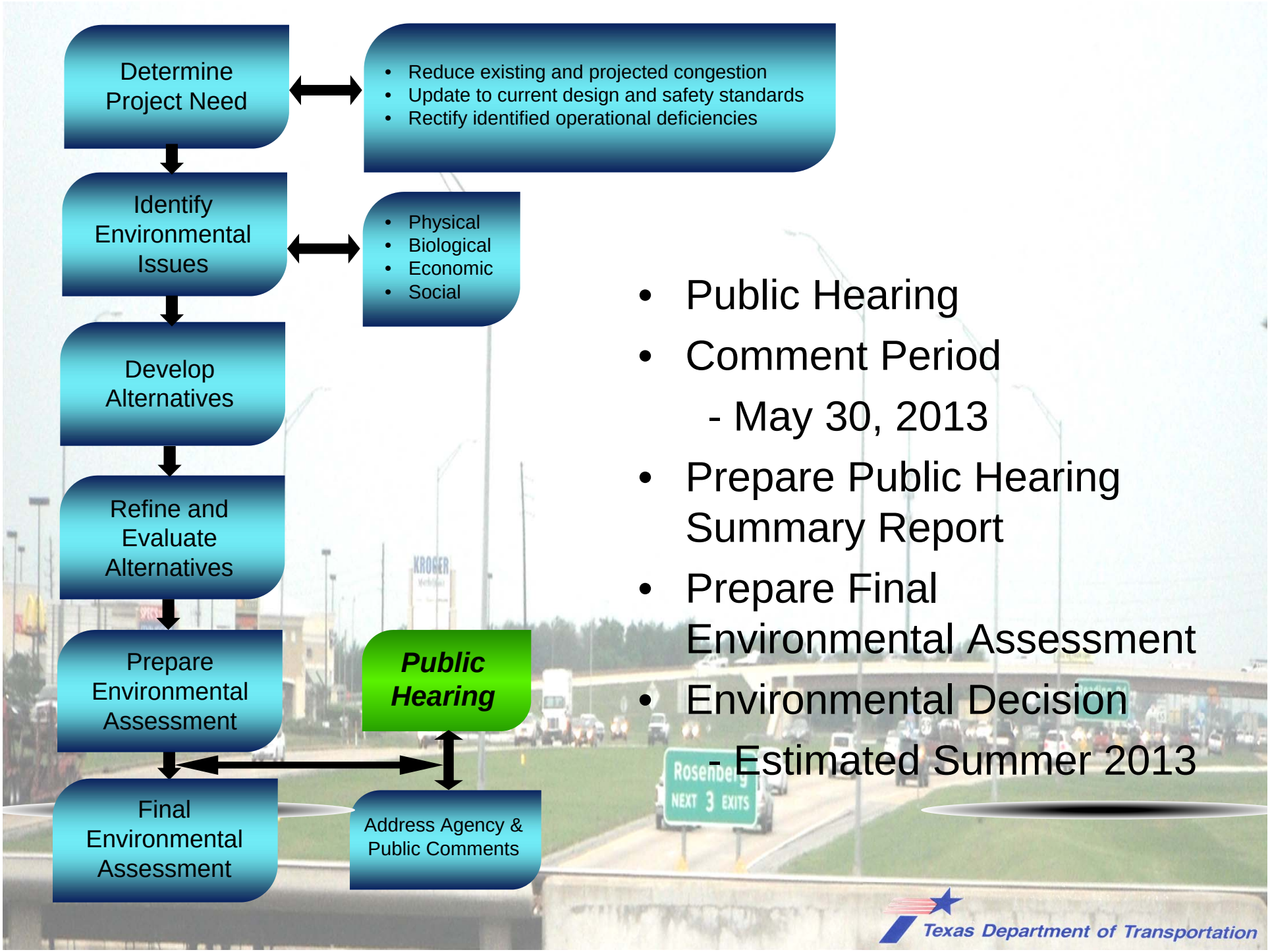
Determine Project Need
Reduce existing and projected congestion
Update to current design and safety standards
Rectify identified operational deficiencies
Identify Environmental Issues
Physical
Biological
Economic
Social
Develop Alternatives
Refine and Evaluate Alternatives
Prepare Environmental Assessment
Public Hearing
Final Environmental Assessment
Address Agency & Public Comments
Public Hearing
Comment Period
- May 30, 2013
Prepare Public Hearing Summary Report
Prepare Final Environmental Assessment
Environmental Decision
- Estimated Summer 2013
Rosenberg
NEXT 3 EXITS
Texas Department of Transportation

PUBLIC COMMENT SESSION

Texas Department of Transportation

ELECTED OFFICIALS

Texas Department of Transportation

VERBAL COMMENT PERIOD

- Submit Speaker Registration Card
- Use Microphone in the Aisle and Face the Court Reporter
- Please Comment on Issues Relevant to the US 59 Project
- Verbal Comments are Limited to 3 Minutes
- Unused Time May Not be Given to Another Speaker

SPEAKER REGISTRATION CARD **Number ___**
PLEASE PRINT

US 59 Public Hearing – May 16, 2013
I desire to make an oral statement at this Public Hearing.

_____
Name

_____
(Representing)

_____
Address

_____
City **State** **ZIP Code**
Speakers will be limited to 3 minutes for comments.

Texas Department of Transportation

VERBAL COMMENT PERIOD

- Submit Speaker Registration Card
- Use Microphone in the Aisle and Face the Court Reporter
- Please Comment on Issues Relevant to the US 59 Project
- Verbal Comments are Limited to 3 Minutes
- Unused Time May Not be Given to Another Speaker

SPEAKER REGISTRATION CARD **Number ___**
PLEASE PRINT

US 59 Public Hearing – May 16, 2013
I desire to make an oral statement at this Public Hearing.

_____
Name

_____
(Representing)

_____
Address

_____
City **State** **ZIP Code**
Speakers will be limited to 3 minutes for comments.

Texas Department of Transportation

VERBAL COMMENTS

Texas Department of Transportation

WRITTEN COMMENTS

Texas Department of Transportation

Thank You

and

Goodnight

Texas Department of Transportation

Appendix D: Sign-in Sheets

Texas Department of Transportation

PUBLIC HEARING: MAY 16, 2013
US 59 (From Spur 10 to SH 99)
Terry High School
5500 Ave N
Rosenberg, Texas 77471

MEDIA

~~PUBLIC~~ SIGN-IN SHEET

Name	Address	City, ZIP Code	Phone	Email
1. S Wallingford		Richmond, TX	832-788-1618	Sharon.Ford@bcbusinessjournal.com
2.				
3.				
4.				
5.				
6.				
7.				
8.				
9.				
10.				

Texas Department of Transportation

PUBLIC HEARING: MAY 16, 2013
US 59 (From Spur 10 to SH 99)
Terry High School
5500 Ave N
Rosenberg, Texas 77471

ELECTED OFFICIALS SIGN-IN SHEET

Name	Elected Position	Address	City, ZIP Code	Phone	Email
1. Vincent Morales	Mayor		Rosenberg		Vincent@ci.rosenberg.tx.us
2. ~~Richard S~~					
3. Richard Morrison	Commissioner Precinct 1				
4.					
5.					
6.					
7.					
8.					
9.					

Texas Department of Transportation

PUBLIC HEARING: MAY 16, 2013
US 59 (From Spur 10 to SH 99)
Terry High School
5500 Ave N
Rosenberg, Texas 77471

PUBLIC SIGN-IN SHEET

Name	Address	City, ZIP Code	Phone	Email
1. Alice Allred	107 Van Dally, Rosenberg	77471	281-239-7881	
2. Randy Blystone	30925 Southwest Fwy Rosenberg	77471	281-238-5577	randyblystone@yahoo.com
3. Henry Wu	26010 S.W. Fwy	77471	713-385-5736	
4. Helen Davis	2008 Tanglelane	77469	832-595-9289	
5. Bill Tobin	1606 Wimberly Hollow Ln	Rosenberg, TX 77471	(281) 725-8730	928019@gmail.com
6. Gary Allred	25919 SW Fwy	Rosenberg 77471	281 342 0787	gary@rosenbergtractor.com
7. Karen Zurawski	801 Texas Ave	Houston 77002	713-362-7961	Karen.Zurawski@chancen-
8. Ed Muegge	213 N. Richmond Rd	Wharton 77488	979. 533. 5252	Broker@CEMuegge.com
9. Sharon Wellingford	Richmond, TX	77469		Sharon@bestbusinessjournal.com
10.				

Texas Department of Transportation

PUBLIC HEARING: MAY 16, 2013
US 59 (From Spur 10 to SH 99)
Terry High School
5500 Ave N
Rosenberg, Texas 77471

PUBLIC SIGN-IN SHEET

Name	Address	City, ZIP Code	Phone	Email
1. ZIKE FLORES	102 VERACRUZ	RSB. 77471	281-239-7581	
2. Diana Dobbs	4724 Pecan Creek	Richmond 77406		diana.dobbs@gmail.com
3. Rocky Stevens	5599 San Felipe #110	Houston TX 77056	713.621.2800 x111	rstevens@welldevco.com
4. Renee Ackley	10929 Waker Rd	Beasley, TX 77417	979-533-6602	
5. Melissa Pena	1209 Timberlane Rosenberg TX 77471		—	-
6. Allen J. Scopel	3814 Marilyn	Rosenberg, Tx 77471	281-342-5893	ajscopel@att.net
7. Roland Adamson	409 So. 11th St	Richmond TX		
8.				
9.				
10.				

Texas Department of Transportation

PUBLIC HEARING: MAY 16, 2013

US 59 (From Spur 10 to SH 99)

Terry High School
5500 Ave N
Rosenberg, Texas 77471

PUBLIC SIGN-IN SHEET

Name	Address	City, ZIP Code	Phone	Email
1. Sidney Mellon	4709 AVE H	Rosenberg 77471	281-342-4603	
2. Lynn Deusner	26029 Southwest Freeway 14B19	Rosenberg 77471	2813412277	ldeusner@gillmanAuto.com
3. Christine Scott	800 Gessner, Ste 500	Houston 77024		cscott@groupleauto.com
4. James Wleczyk	1220 EASY St ~~Rosen~~	Rosenberg 77471	281-342-3020	
5. Steve Wlecz	1220 EASY	Rosenberg 77471	281-342-3020	
6. KARL HANSEN	BOX 1153	ROSENBERG 77471		
7. Art Olson	1510 Old Elm Trl ~~Sugarland~~	Sugarland 77479	281-343-9364	olsons71@yahoo.com
8. JOSEPH ELLANKIL	734 LAKESHORE DR	SUGAR LAND 77478	281-277-5252	ELLANKIL@GMAIL.COM
9. LARRY PITTMAN	608 IRONWOOD COURT	Richmond 77469	713-822-4088	pittman426@aol.com
10.				

Texas Department of Transportation

PUBLIC HEARING: MAY 16, 2013
US 59 (From Spur 10 to SH 99)
Terry High School
5500 Ave N
Rosenberg, Texas 77471

PUBLIC SIGN-IN SHEET

Name	Address	City, ZIP Code	Phone	Email
1. Bernie Fredregill	1708 Cedar Dr.	Richmond, TX 77469	281-344-8183	bwteam@comcast.net
2. Mario Delgollado	4206 Airport Dr	Rosenberg, Tx 77471	832-439-5485	mrdelgolladojr@gmail.com
3. DeWayne Davis			281 633 7513	dewayne.davis@co.fort-bend.tx.us
4. Sue Herreth	30444 S.W. Fwy	Rosenberg, Tx	281 239 9814	sueh@ocusoft.com
5. Dorthy Eakins	30444 S.W. Fwy	Rosenberg Tx	281-239-9817	deakins@ocusoft.com
6. Alma Jo Douglas	5918 Mettler Rd	Richmond 77469	832/595-2677	almajol@comcast.net
7. Jacque Burgess	5319 Navia Woods	Fulshear 77441	281/455-9855	burgess.jacque@yahoo.com
8. Vince Finnegan	26529 SW Freeway	Rosenberg 77471	281-342-4200	vfinnegan@finnegancto.com
9. Cynthia Barratt	30444 S.W. Freeway	Rosenberg 77471	281-239-9801	cBarratt@ocusoft.com
10. Jan Gutowsky	2408 Freeway Manor	Rosenberg 77471	281 232 2636	jnjgutowsky@comcast.net

Texas Department of Transportation

PUBLIC HEARING: MAY 16, 2013
US 59 (From Spur 10 to SH 99)
Terry High School
5500 Ave N
Rosenberg, Texas 77471

PUBLIC SIGN-IN SHEET

Name	Address	City, ZIP Code	Phone	Email
1. Joanie McLeod	4217 Case St.	Houston, TX 77005	713-498-5424	joandouglas81@gmail.com
2. GARY FINNEGAN	2652A SW FRWY	ROSENBERG, TX 77471	281-342-4300	gfinnegan@finneganauto.com
3. CHARLES HEWITT	30444 SW FREEWAY	ROSENBERG, TX 77471	281-239-9811	
4. Thomas Mason	30444 SW Freeway	Rosenberg TX 7747	281-2026154	Thomasm@ocusoft.com
5. Pat McDonald	611 Morton St	Richmond, Tx 77469	281-762-5200	
6. ANTO PARAMBIL	5714 Sapphire Bayou	Sugar Land Texas	281-748-8918	parambila@aol.com
7. Soila Segura	1100 Ave I	Ros 77471	832-876-3163	soila@debmark.net
8. Mark Schmid	2006 Thompson Hwy	Rich, 77469	713-304-1425	" " "
9. Evelyn Haas	126 Cedar Elm Ln.	Georgetown, 78633	512-775-4215	evelyn_haas@yahoo.com
10. Nyland Bacah	3900 Airport Ave	Rosenberg 77471	281-232-7349	—

Texas Department of Transportation

PUBLIC HEARING: MAY 16, 2013
US 59 (From Spur 10 to SH 99)
Terry High School
5500 Ave N
Rosenberg, Texas 77471

PUBLIC SIGN-IN SHEET

Name	Address	City, ZIP Code	Phone	Email
1. Chris Talbert	7501 Westview	Houston TX 77055	713 464-8882	cct@talbertpoc.com
2. James B. Duke	3900 B.F. Terry Blvd.	Rosenberg	2.341.8800	JBDuke@missionparks.com
3. Annette Stolleis	21314 Winding Path Way	Richmond	341-1963	anjessup@gmail.com
4. Russell Drachenberg	1124 Blume Rd	Rosenberg TX 77471	281-633-7509	rdd@co.fort-bend.tx.us
5. ALDO Cortes	28029 SW FWY	Rosenberg TX 77471	713 927-2829	acortes@gillmanauto.com
6. Richard Stolleis	1124 Blume Road	Rosenberg TX 77471	281.633-7506	richard.stolleis@fortbendcountytx.gov
7. Tim McCarty	1205 Jackson ST	Richmond TX 77469	281 725-4410	tmccarty@obmc.org
8. SAM SINGH	26111 Southwest Freeway Rosenberg TX	Rosenberg TX 77471	281-250-9816	INFO@NSTIN.com
9. MATT STOOPS	23501 CINCO RANCH BLVD. #A-250 KATY, TX	77494	281-579-0340	MATT.STOOPS@KRGA.COM
10. JORGE GARCIA	7600 Washington	7		Jgarciaduran@yahoo.com

Texas Department of Transportation

PUBLIC HEARING: MAY 16, 2013

US 59 (From Spur 10 to SH 99)

Terry High School
5500 Ave N
Rosenberg, Texas 77471

PUBLIC SIGN-IN SHEET

Name	Address	City, ZIP Code	Phone	Email
1. Pete Harvey	26001 SW FRWY	Rosenberg TX 77471	281 633 5566	pharvey@gillmanauto.com
2. Jacqueline Hernandez	2311 Geronimo Lane	Rosenberg, TX 77471	281-935-0784	Jacquehdz215@yahoo.com
3. Guy Andrus	6319 Fisher Bend	Rosenberg tx	337-764-4624	blessed1960@xnhoo.com
4. Jeff Trinker		Rosenberg, TX	832-595-3334	jeff@ci.rosenberg.tx.us
5. [illegible]	2004 Eastwood Drive Richmond TX	Richmond, TX	281 341-5711	
6. Bobby Wleczyk	2104 Spruce Dr	Rosenberg TX	281 342-3020	
7. Patti Lawlor	6707 Highlawn Dr	Sugar Land 77479	281 343 9422	
8. Sreeni Nakirekanti	1215 Pendegrass Tal	Sugar Land, TX 77479		vasukanti@gmail.com
9. STACY FOSTER	30444 SW FRWY	ROSENBERG, TX 77471		
10. Pat Pittman	608 Ironwood Ct.	Richmond, TX 77469	281-344-9432	

Appendix E: Comment Letters, E-mails, Forms, and Speaker Cards

May 16, 2013

James Koch
Houston District
Texas Department of Transportation
P.O. Box 1386
Houston, Texas 77251-1386

Re: Proposed Expansion Project – US Hwy 59/I-69

Dear Mr. Koch,

We appreciate the opportunity to provide input on the proposed improvements regarding US Hwy 59/I-69. Based upon a review of the proposed plans, we present the following comments for your consideration.

1. SH 36 intersection. Project schematic includes improvements at the SH 36 intersection, including additional frontage road lane capacity and designated U-turn lanes for the frontage roads. The existing traffic congestion on SH 36, particularly related to southbound traffic, will continue to increase over time. Therefore, additional lane capacity for designated movements on SH 36 must be included. The project must also include traffic signal synchronization with nearby intersection of Callendar Street. The City would like confirmation the improvements illustrated on the schematic and the additional improvements described herein will be constructed as a part of this project.

2. FM 2218 intersection. Project schematic includes improvements that will address the FM 2218 intersection, including frontage road capacity and designated U-turn lanes for the frontage roads. The schematic design also addresses the northbound frontage road alignment that is much needed to improve traffic flow, safety and the conflict with the Bryan Road intersection. The City has plans to reconfigure the Bryan Road intersection at FM 2218, relocating the intersection away from US Hwy 59. This must be taken into consideration as a part of the expansion design and construction plans. The City would like confirmation the improvements illustrated on the schematic and the additional improvements described herein will be constructed as a part of this project.

3. Frontage Road. Project schematic includes the construction of frontage roads in both the north and south directions of travel for the entire length of this project. The City would like confirmation the frontage roads will be constructed as shown on the schematic to improve traffic flow patterns and ease congestion.

4. Proposed Right of Way (R.O.W.) between Reading Road and FM 762. The 30% Utility plans end between Reading Road and FM 762. Recent discussions between the TxDOT Design Team and City Staff now indicate the project limits will end just south of Reading Road. The concern is the width of the proposed R.O.W. between Reading Road and FM 762. The R.O.W. as currently proposed, will have a substantial negative impact on the Brazos Town Center Retail Developments located on either side of the US Hwy 59 corridor. According to the recollections of City Staff, the ultimate R.O.W. width was discussed in great detail with the former TxDOT Area Engineer, Jim Hunt and the Developer of the Brazos Town Center to ensure a sufficient amount of open space was retained to accommodate the future widening of US Hwy 59. At this time, the City would like to confirm the scope of this project phase will end south of Reading Road. Secondly, the City is requesting a formal review of the additional R.O.W. requirements between Reading Road and FM 762 taking into account design criteria previously discussed and agreed upon by the Brazos Town Center Developer and TxDOT staff. Mutually agreed upon R.O.W. width and design modifications to accommodate the reduced R.O.W. width will need to be incorporated into the next phase of the expansion project.

5. Reading Road intersection. The project schematic depicts the Reading Road overpass remaining in place with the US Hwy 59 mainlanes at-grade level. This is contrary to all other major intersecting streets within this project, in

OFFICE OF THE MAYOR
2110 4th Street*P.O. Box 32*Rosenberg, Texas 77471-0032*832.595.3340*Fax 832.595.3333
www.ci.rosenberg.tx.us

which the US Hwy 59 mainlanes are being elevated and the intersecting streets remaining at-grade level. The City is formally requesting this same concept be applied to the Reading Road intersection. This would greatly improve traffic flow on the intersecting street and frontage roads. Designated U-turn lanes must also be incorporated into the design similar to all other intersections in this project.

6. Northbound Frontage Road Access. Spur 10, Cottonwood Church Road, Kroesche Road area. The project schematic depicts a northbound exit ramp just south of the Spur 10 intersection. The next northbound exit ramp is located near Kroesche Road. This means traffic trying to access any of the streets, businesses, or properties located between these intersections, would have to exit at Spur 10, maneuver through the Spur 10 intersection and utilize the frontage road for this entire road segment. The proposed ramp placements in this segment of US Hwy 59 appear to be contrary to the design used for the remainder of this project. The City is formally requesting the same concept used for locating ramps be applied to this segment of the project which should result in the addition of at least 1 exit ramp immediately north of the Spur 10 intersection.

7. Decorative and Wayfinding Elements. The project schematics include several overpasses, vertical surfaces, and green spaces. The City has made improvements to the current highway, including painting and landscaping. We would like to see similar improvements incorporated into the design of the project, including opportunities to identify the stretch of highway as being "Rosenberg" through paint schemes similar to the SH 36 and FM 2218 overpasses and consistent landscaping. Additionally, we would request that opportunities for wayfinding signage to significant destinations be included, such as Seabourne Creek Regional Sports Complex and Nature Park, Historic Downtown Rosenberg, Traylor Stadium, Rosenberg Business Park, Fort Bend County Fairgrounds, City Hall, and Brazos Town Center.

The City of Rosenberg appreciates your consideration of these comments. Please do not hesitate to contact me if you require additional comments or have any questions.

Sincerely,

Vincent M. Morales, Jr.
Mayor

JMM/kes

xc: Pat Henry, Houston District, Texas Department of Transportation
Jeff A. Volk, P.E., Fort Bend/Waller Area Office, Texas Department of Transportation
Jack S. Hamlett, City Manager
John Maresh, Assistant City Manager
Charles A. Kalkomey, P.E., City Engineer
Matt Fielder, Economic Development Director
File/Correspondence
File/I-69
File/Texas Department of Transportation

EVALYN W. MOORE
MAYOR

WILLIAM H. (BILL) DOSTAL, SR.
GARY L. GILLEN
COMMISSIONERS

City of Richmond

402 Morton Street
Richmond, TX 77469
(281) 342-5456

May 30, 2013

Mr. James Koch
Houston District
Texas Department of Transportation
P. O. Box 1386
Houston, Texas 77251-1386

Re: Proposed Expansion Project – US Hwy 59 / I-69

Dear Mr. Koch,

Thank you for holding the public hearing on the above-referenced project and also for affording the City of Richmond with the opportunity to provide our comments on the proposed TxDOT project. Please allow this letter to confirm two areas of concern.

In a recent office discussion, a comment was made that the main lanes will be going over Reading Road. This change, which we agree should be made, will cause all of the traffic from FM 762 to US 59 south to have to go through the Reading Road intersection and enter the main lanes near FM 2218. This seems like quite a long distance with an intersection creating a stop in traffic before being able to enter the main lanes. A possible solution may be to change the south bound entrance ramp just north of FM 762, to an exit ramp and the exit ramp south of FM 762, to an entrance ramp.

Plan reviews indicate that the project will include multiple overpasses, vertical surfaces and green spaces. We want to be assured of aesthetically pleasing signage that will identify the highway as being "Richmond" through paint schemes similar to the FM 2218 overpass. We would also like to request that way finding signage to significant destinations be included, such as Historic Downtown Richmond, Morton Cemetery, Fort Bend County Courthouse Complex, George Park, Wessendorff Park, Clay Park and George Memorial Library.

The City of Richmond appreciates your courtesy to allow us to provide our comments. Please contact me if you need any clarification or have questions regarding our concerns.

Sincerely,

Terri Vela

Terri Vela
City Manager
TV:gt

From: Stolleis, Richard [mailto:Richard.Stolleis@fortbendcountytx.gov]
Sent: Thursday, May 30, 2013 5:00 PM
To: HOU-PIOWebMail
Cc: Davis, DeWayne; Morrison, Richard; Wenzel, James; James Koch; Pat Henry; Manny Francisco; Shelton, Paulette; Prestage, James; Meyers, Andy; Patterson, James
Subject: US59 Public Hearing Comments

All, the following comments and questions are based on the Fort Bend County Engineering Department's review of the Project Schematic presented at the Public Hearing in Rosenberg at Terry High School on May 16, 2013.

The County looks forward to working with TxDOT to implement this important project. The County is very supportive of TxDOT's efforts to complete this project and we appreciate the opportunity to submit our thoughts related to the project.

Submitted via email: May 30, 2013

Fort Bend County Engineering Department comments are as follows:

1. Consider reversing the NB entrance ramp at Station 995+00 and NB exit ramp at Station 1045+00.
2. Consider reversing the SB exit ramp at Station 975+00 and SB exit ramp at Station 1045+00.
3. Consider reconfiguration of the SB frontage roads in the area of Spur 529 to create the continuous frontage roads.
4. Consider reversing the NB entrance ramp at Station 1080+00 and the NB exit ramp at Station 1115+00. If the ramps are not reversed, relocate the exit ramp at Station 1115+00 to the south to accommodate a future County Fairgrounds entrance road (80' Fort Bend County Access easement shown on the schematic).
5. Consider reversing the SB exit ramp at Station 1080+00 and the SB entrance ramp at Station 1115+00.
6. Consider converting proposed Reading Road overpass to a conventional diamond intersection to improve traffic movements at this location.
7. Consider reversing the SB exit ramp at Station 1370+00 and the SB entrance ramp at Station 1420+00 to provide direct Fm762 to US59 South without having to travel along the frontage roads for approximately one and one-half miles and if the Reading Road intersection is changed without having travel through the requested diamond intersection.
8. Coordinate the project design adjoining the Fm762 Park & Ride facilities with the Fort Bend Public Transportation Department to accommodate future contemplated enhancement of Park & Ride services at this location.
9. Provide additional lane lengths on the exit ramp to Fm762 to allow for stacking and to facilitate free-flow of traffic in the turning lanes.
10. Reconfigure frontage roads and install retaining walls, as needed, to minimize additional right-of-way requirements in the vicinity of Fm762 and Reading Road.

11. Coordinate the NB frontage road design with existing on-the-ground conditions to determine whether the proposed pavement stub-outs are needed at Stations 1510+00 and 1526+00.
12. If additional right-of-way is required at the Oak Bend Medical Facility, revise the design to accommodate an additional driveway for the emergency room access that will be affected by the taking.

Regards,

Richard

Richard W. Stolleis, PE
Fort Bend County Engineer
1124 Blume Road
Rosenberg, Texas 77471-1449
Richard.Stolleis@FortBendCountyTX.gov
office.281.633.7506

++++++CONFIDENTIALITY NOTICE+++++
The information in this email may be confidential and/or privileged. This email is intended to be reviewed by only the individual or organization named above. If you are not the intended recipient or an authorized representative of the intended recipient, you are hereby notified that any review, dissemination or copying of this email and its attachments, if any, or the information contained herein is prohibited. If you have received this email in error, please immediately notify the sender by return email and delete this email from your system. Thank you in advance for your assistance.

Amy M. Brook

From: Joseph Liggio <Joseph.Liggio@txdot.gov>
Sent: Wednesday, May 22, 2013 2:50 PM
To: Amy M. Brook
Cc: Manny Francisco
Subject: FW: US 59 / I-69 Project (froms Spur 10 to SH 99)

Amy,

Here is an e-mailed comment about US 59

From: HOU-PIOWebMail
Sent: Wednesday, May 22, 2013 2:24 PM
To: Pat Henry
Cc: Joseph Liggio
Subject: FW: US 59 / I-69 Project (froms Spur 10 to SH 99)

Forwarded for your handling .Thanks.

Danny Perez
Public Information Officer
Texas Dept. of Transportation - Houston District
Danny.Perez@txdot.gov
Office: (713) 802-5077
Cell: (281) 686-0977

Follow us on twitter @txdothoustonpio
Watch us @ www.youtube.com/txdotpio

From: Schmid Mark (US Partners) [mailto:mark.schmid@partners.mcd.com]
Sent: Monday, May 20, 2013 6:50 PM
To: HOU-PIOWebMail
Subject: US 59 / I-69 Project (froms Spur 10 to SH 99)

Concerning Project US 59 / I-69

I'd like to start by saying, if this proposal stays the way it is, it will put me out of business. This will also put my neighboring 18 wheeler fuel station out of business as well. We are used to the existing entrance/egress situation at hand. What is proposed would make entering my property most difficult and unenticing. In order to visit us coming north, one would have to exit onto the service road way back prior to the Spur 10 bridge. In order to visit us coming south, one would have to exit onto the service road way back prior to Kroesche Rd. Immediate departure from my property is fine yet one must take the service road past Spur 10 going South and past Kroesche going North in order to re-enter the freeway. My customer would be inconvenienced to the point that they would NOT patronize us. This project will discourage our used to customers that we have captured in the past. We will NOT survive this.

I recommend Freeway entrance / egress options much closer to my place of business. It must NOT be made difficult to visit our place of business.

Mark Schmid
Owner/Operator
Sam-Cas Enterprises Inc
dba McDonald's
2006 Thompson Rd suite 100
Richmond,Texas 77469
O: 281-342-8602
M: 713-304-1425
F: 832-595-0814
mark.schmid@partners.mcd.com

Amy M. Brook

From: Joseph Liggio <Joseph.Liggio@txdot.gov>
Sent: Tuesday, May 28, 2013 2:46 PM
To: Amy M. Brook
Subject: FW: US 59: from Spur 10 to SH 99- Comment

Amy,

Below is a comment from the US 59 Public Hearing. Thanks.

From: HOU-PIOWebMail
Sent: Tuesday, May 28, 2013 9:41 AM
To: Pat Henry; Joseph Liggio
Subject: FW: US 59: from Spur 10 to SH 99- Comment

Forwarded for your handling. Thanks.

Danny Perez
Public Information Officer
Texas Dept. of Transportation - Houston District
Danny.Perez@txdot.gov
Office: (713) 802-5077
Cell: (281) 686-0977

Follow us on twitter @txdothoustonpio
Watch us @ www.youtube.com/txdotpio

From: Marc Anderson [mailto:marc_byu@yahoo.com]
Sent: Wednesday, May 22, 2013 8:12 PM
To: HOU-PIOWebMail
Subject: US 59: from Spur 10 to SH 99- Comment

I am strongly in favor of this project and request that it be completed as soon as possible (as I'm sure most people agree). I don't know what the next steps are and how long they will take, but it's not soon enough. Traffic is horribly bottle-necked where US-59 (now I-69) narrows to two lanes coming from the north. Really is a safety hazard and there always seems to be an accident in this area. In addition, lack of contiguous frontage roads is also a real pain for traffic in this area. Lots of growth has happened here, in the Brazos Town Center especially, and due to the lack of frontage roads traffic IN this shopping center is congested as well (not to mention the strange ways of getting on and off I-69). Is there an "easy button" somewhere (maybe labeled "stimulus") that'll bump up the timetable on this project?

_____

Marc and Crystal Anderson
Fairpark Village in Rosenberg, TX (south of I-69 on SH36)

COMMENT FORM
(FORMA DE COMENTARIO)

Public Hearing – US 59 (from Spur 10 to SH 99)
(Audiencia Pública – US 59 (desde Spur 10 hasta SH 99))

CSJ Nos. 0027-12-097, 0027-12-105, 0027-12-106, and 0027-12-114
May 16, 2013
(16 de mayo de 2013)

__**I am an Elected Official** (Soy Funcionario/a) **Position** (Posición):_____

Name and Mailing Address (Optional) (Nombre y Dirección [Opcional]):
Name (Nombre) Shantell Hurt
Address (Dirección) 30444 South West Freeway Rosenberg TX 77471
Email Address (Dirección de Correo Electrónico)_____
Telephone (Teléfono)_____

PLEASE CHECK THE APPROPRIATE ITEMS BELOW: (POR FAVOR COMPREBRE LOS ARTÍCULOS SIGUIENTES QUE SEAN APROPIADOS)

I am primarily interested in the project from the standpoint of a: (Estoy interesado en el proyecto del punto de vista de:)
__**Residential property owner or renter** (Propietario o inquilino residencial) __**Business property owner or lessee** (Propietario o inquilino del negocio)
✓**Other (Please explain)** (Otro [Por favor de explicar]) Ocusoft Employee

Per Texas Transportation Code, §201.811(a)(5): check each of the following boxes that apply to you: (Por Código de Transportación de Tejas, §201.811(a)(5): apunte todo que aplique:)
__I am employed by TxDOT (Soy empleado de TxDOT)
__I do business with TxDOT (Tengo oficio con TxDOT)
__I could benefit monetarily from the project or other item about which I am commenting (Puedo beneficar monetariamente por hecho de este proyecto u otro asunto de cual estoy comentando)

How did you learn about this hearing? (¿Como se entero usted de esta audiencia?)

__**Newspaper** (Periódico) __**Notice in the Mail** (Aviso por Correo) __**Yard Signs** (Letreros en Jardines)
✓**Other** (Please explain) (Otro [Por favor de explicar])_____

Do you support the proposed project? (¿Apoya usted el proyecto propuesto?) ___ **Yes** (Sí) ✓ **No** (No) ___**Undecided** (No he decidido)

COMMENTS (COMENTARIOS): My feelings toward the matter of expanding the highway is fine. But as far as expanding in front of Ocusoft doesn't sit to well. Once they cut off the front of the Buldings space danger can uphold. If there is a collision it could affect our Ocusoft Buldings. Secondly it will be a huge Noise Hassle including the vibrations. The DPS also stop several cars that be right in our grasp. If only the construction

Please make additional comments on the back. (Por favor de hacer sus comentarios adicionales atrás de esta forma.)

This comment form may be turned in tonight, mailed, or emailed by May 30, 2013 to the address below:
(Esta forma de comentario se puede regresar esta noche, por correo postal, o por correo electrónico antes del 30 de mayo de 2013 a:)

Director of Project Development
Texas Department of Transportation – Houston District
P.O. Box 1386
Houston, Texas 77251-1386
Email: hou-piowebmail@txdot.gov

could be moved further down the road that be Scott's.

Director of Project Development
Texas Department of Transportation – Houston District
P.O. Box 1386
Houston, Texas 77251-1386

Director of Project Development
Texas Department of Transportation – Houston District
P.O. Box 1386
Houston, Texas 77251-1386

J.L. (CSJ Nos. 0027-12-097, 0027-12-105, 0027-12-106, and 0027-12-114)

COMMENT FORM
(FORMA DE COMENTARIO)

Public Hearing – US 59 (from Spur 10 to SH 99)
(Audiencia Pública – US 59 (desde Spur 10 hasta SH 99))

CSJ Nos. 0027-12-097, 0027-12-105, 0027-12-106, and 0027-12-114
May 16, 2013
(16 de mayo de 2013)

__**I am an Elected Official** (Soy Funcionario/a) **Position** (Posición):_____

Name and Mailing Address (Optional) (Nombre y Dirección [Opcional]):
Name (Nombre) Cynthia L. Barratt - Ocusoft
Address (Dirección) 30444 S.W. Freeway Rosenberg, TX 77471
Email Address (Dirección de Correo Electrónico) CBarratt@OCUSOFT.com
Telephone (Teléfono) 281-239-9801

PLEASE CHECK THE APPROPRIATE ITEMS BELOW: (POR FAVOR COMPREBRE LOS ARTÍCULOS SIGUIENTES QUE SEAN APROPIADOS)

I am primarily interested in the project from the standpoint of a: (Estoy interesado en el proyecto del punto de vista de:)
__**Residential property owner or renter** (Propietario o inquilino residencial) ✓**Business property owner or lessee** (Propietario o inquilino del negocio)

__**Other (Please explain)** (Otro [Por favor de explicar]) _____

Per Texas Transportation Code, §201.811(a)(5): check each of the following boxes that apply to you: (Por Código de Transportación de Tejas, §201.811(a)(5): apunte todo que aplique:)
__I am employed by TxDOT (Soy empleado de TxDOT)
__I do business with TxDOT (Tengo oficio con TxDOT)
__I could benefit monetarily from the project or other item about which I am commenting (Puedo beneficar monetariamente por hecho de este proyecto u otro asunto de cual estoy comentando)

How did you learn about this hearing? (¿Como se entero usted de esta audiencia?)
✓**Newspaper** (Periódico) __**Notice in the Mail** (Aviso por Correo) __**Yard Signs** (Letreros en Jardines)
__**Other** (Please explain) (Otro [Por favor de explicar]) _____

Do you support the proposed project? (¿Apoya usted el proyecto propuesto?) __**Yes** (Sí) ✓ **No** (No) __**Undecided** (No he decidido)
Not as currently proposed

COMMENTS (COMENTARIOS): We are concerned about employee safety due to access road proximity + traffic (increased) Mostly women who work in building - we are pharmaceutical company + want to avoid potential for crime. Suggestion - move project 100' south to straighten out "dead man's curve" at 529 + avoid cost of acquiring improved land vs unimproved farm land + accomplish Txdot goals. We are concerned about noise, vibrations, etc. Kroesche road could be a "dead end" on both sides

Please make additional comments on the back. (Por favor de hacer sus comentarios adicionales atrás de esta forma.)

This comment form may be turned in tonight, mailed, or emailed by May 30, 2013 to the address below:
(Esta forma de comentario se puede regresar esta noche, por correo postal, o por correo electrónico antes del 30 de mayo de 2013 a:)

Director of Project Development
Texas Department of Transportation – Houston District
P.O. Box 1386
Houston, Texas 77251-1386
Email: hou-piowebmail@txdot.gov

of the freeway + reduce cost of the complete project. In addition, the traffic in the Kroesche road area does not support the 5 lanes proposed. Delay or stop Kroesche project until traffic / population warrants + save money. The amount of land used is 350' elsewhere - near Oaugt 415' will be used - suggestion - reduce green belt area.

Thank you

Director of Project Development
Texas Department of Transportation – Houston District
P.O. Box 1386
Houston, Texas 77251-1386

Director of Project Development
Texas Department of Transportation – Houston District
P.O. Box 1386
Houston, Texas 77251-1386

J.L. (CSJ Nos. 0027-12-097, 0027-12-105, 0027-12-106, and 0027-12-114)

COMMENT FORM
(FORMA DE COMENTARIO)

Public Hearing – US 59 (from Spur 10 to SH 99)
(Audiencia Pública – US 59 (desde Spur 10 hasta SH 99))

CSJ Nos. 0027-12-097, 0027-12-105, 0027-12-106, and 0027-12-114
May 16, 2013
(16 de mayo de 2013)

__**I am an Elected Official** (Soy Funcionario/a) **Position** (Posición):_____

Name and Mailing Address (Optional) (Nombre y Dirección [Opcional]):
Name (Nombre) Samantha Erias
Address (Dirección) 30444 ~~Kingsche~~ Southwest Freeway Rosenberg TX 77471
Email Address (Dirección de Correo Electrónico)_____
Telephone (Teléfono)_____

PLEASE CHECK THE APPROPRIATE ITEMS BELOW: (POR FAVOR COMPREBRE LOS ARTÍCULOS SIGUIENTES QUE SEAN APROPIADOS)

I am primarily interested in the project from the standpoint of a: (Estoy interesado en el proyecto del punto de vista de:)
__**Residential property owner or renter** (Propietario o inquilino residencial) __**Business property owner or lessee** (Propietario o inquilino del negocio)
✓**Other (Please explain)** (Otro [Por favor de explicar]) employee Ousoft

Per Texas Transportation Code, §201.811(a)(5): check each of the following boxes that apply to you: (Por Código de Transportación de Tejas, §201.811(a)(5): apunte todo que aplique:)
__I am employed by TxDOT (Soy empleado de TxDOT)
__I do business with TxDOT (Tengo oficio con TxDOT)
__I could benefit monetarily from the project or other item about which I am commenting (Puedo beneficar monetariamente por hecho de este proyecto u otro asunto de cual estoy comentando)

How did you learn about this hearing? (¿Como se entero usted de esta audiencia?)
✓**Newspaper** (Periódico) __**Notice in the Mail** (Aviso por Correo) __**Yard Signs** (Letreros en Jardines)
__**Other** (Please explain) (Otro [Por favor de explicar])_____

Do you support the proposed project? (¿Apoya usted el proyecto propuesto?) ___ **Yes** (Sí) ✓ **No** (No) ___**Undecided** (No he decidido)

COMMENTS (COMENTARIOS): Safety, Noise, pushing it further can help fix "Dead man" turn the turning lanes at Frontage Rd. is not supported by traffic, there always law enforcment stopped/pulling vehicles over it would be very close.

Please make additional comments on the back. (Por favor de hacer sus comentarios adicionales atrás de esta forma.)

This comment form may be turned in tonight, mailed, or emailed by May 30, 2013 to the address below:
(Esta forma de comentario se puede regresar esta noche, por correo postal, o por correo electrónico antes del 30 de mayo de 2013 a:)

Director of Project Development
Texas Department of Transportation – Houston District
P.O. Box 1386
Houston, Texas 77251-1386
Email: hou-piowebmail@txdot.gov

COMMENT FORM
(FORMA DE COMENTARIO)

Public Hearing – US 59 (from Spur 10 to SH 99)
(Audiencia Pública – US 59 (desde Spur 10 hasta SH 99))

CSJ Nos. 0027-12-097, 0027-12-105, 0027-12-106, and 0027-12-114
May 16, 2013
(16 de mayo de 2013)

__**I am an Elected Official** (Soy Funcionario/a) **Position** (Posición):_____

Name and Mailing Address (Optional) (Nombre y Dirección [Opcional]):
Name (Nombre) Eunice Pensado
Address (Dirección) 30444 SW Freeway Rosenberg TX 77471 2605 Stenle Rd. Rosenberg TX 77471
Email Address (Dirección de Correo Electrónico) epensado@ocusoft
Telephone (Teléfono) 281 638 3219

PLEASE CHECK THE APPROPRIATE ITEMS BELOW: (POR FAVOR COMPREBRE LOS ARTÍCULOS SIGUIENTES QUE SEAN APROPIADOS)

I am primarily interested in the project from the standpoint of a: (Estoy interesado en el proyecto del punto de vista de:)
__**Residential property owner or renter** (Propietario o inquilino residencial) __**Business property owner or lessee** (Propietario o inquilino del negocio)
✓**Other (Please explain)** (Otro [Por favor de explicar]) employee of local business. / Ocusoft

Per Texas Transportation Code, §201.811(a)(5): check each of the following boxes that apply to you: (Por Código de Transportación de Tejas, §201.811(a)(5): apunte todo que aplique:)
__I am employed by TxDOT (Soy empleado de TxDOT)
__I do business with TxDOT (Tengo oficio con TxDOT)
__I could benefit monetarily from the project or other item about which I am commenting (Puedo beneficar monetariamente por hecho de este proyecto u otro asunto de cual estoy comentando)

How did you learn about this hearing? (¿Como se entero usted de esta audiencia?)
✓**Newspaper** (Periódico) __**Notice in the Mail** (Aviso por Correo) __**Yard Signs** (Letreros en Jardines)
✓**Other** (Please explain) (Otro [Por favor de explicar]) _____

Do you support the proposed project? (¿Apoya usted el proyecto propuesto?) ___ **Yes** (Sí) X **No** (No) ___**Undecided** (No he decidido)

COMMENTS (COMENTARIOS): • safety • noise • DPS/Law enforcement stop traffic 100 ft South onto the Cotton fields
Deads mans curb ↓ making it Straight will be less accidents
turning lane at intersection Frontage Road is not supported by the traffic in the area.

Please make additional comments on the back. (Por favor de hacer sus comentarios adicionales atrás de esta forma.)

This comment form may be turned in tonight, mailed, or emailed by May 30, 2013 to the address below:
(Esta forma de comentario se puede regresar esta noche, por correo postal, o por correo electrónico antes del 30 de mayo de 2013 a:)

Director of Project Development
Texas Department of Transportation – Houston District
P.O. Box 1386
Houston, Texas 77251-1386
Email: hou-piowebmail@txdot.gov

COMMENT FORM
(FORMA DE COMENTARIO)

Public Hearing – US 59 (from Spur 10 to SH 99)
(Audiencia Pública – US 59 (desde Spur 10 hasta SH 99))

CSJ Nos. 0027-12-097, 0027-12-105, 0027-12-106, and 0027-12-114
May 16, 2013
(16 de mayo de 2013)

__**I am an Elected Official** (Soy Funcionario/a) **Position** (Posición):_____

Name and Mailing Address (Optional) (Nombre y Dirección [Opcional]):
Name (Nombre) Irene Herrera
Address (Dirección) 30444 Southwest Fwy (work) (Home)-3111 Joe St. Needville, Tx 77461
Email Address (Dirección de Correo Electrónico) mailroom@ocusoft.com ireneeherrera22@aol.com
Telephone (Teléfono) 832-595-7256

PLEASE CHECK THE APPROPRIATE ITEMS BELOW: (POR FAVOR COMPREBRE LOS ARTÍCULOS SIGUIENTES QUE SEAN APROPIADOS)

I am primarily interested in the project from the standpoint of a: (Estoy interesado en el proyecto del punto de vista de:)
__**Residential property owner or renter** (Propietario o inquilino residencial) __**Business property owner or lessee** (Propietario o inquilino del negocio)
X **Other (Please explain)** (Otro [Por favor de explicar]) Employee at OCUSOFT

Per Texas Transportation Code, §201.811(a)(5): check each of the following boxes that apply to you: (Por Código de Transportación de Tejas, §201.811(a)(5): apunte todo que aplique:)
__I am employed by TxDOT (Soy empleado de TxDOT)
__I do business with TxDOT (Tengo oficio con TxDOT)
__I could benefit monetarily from the project or other item about which I am commenting (Puedo beneficar monetariamente por hecho de este proyecto u otro asunto de cual estoy comentando)

How did you learn about this hearing? (¿Como se entero usted de esta audiencia?)

X **Newspaper** (Periódico) __**Notice in the Mail** (Aviso por Correo) __**Yard Signs** (Letreros en Jardines)
__**Other** (Please explain) (Otro [Por favor de explicar]) _____

Do you support the proposed project? (¿Apoya usted el proyecto propuesto?) ___ **Yes** (Sí) X **No** (No) ___**Undecided** (No he decidido)

COMMENTS (COMENTARIOS): DPS/Law Enforcement Stop traffic you are always seeing DPS pull some one and even bust people what happens if they get to our office.
Safety, Noise
if you move it South you can get rid of dead man curve
Turning lanes intersection on the frontage is not supported by the traffic in the area
Safety wise is if you move lanes to our door what happens if a eighteen wheeler has an accident then it would be on our desk some one can get hurt or worse. How will the employees get out from work with out getting hurt from a upcoming vehicle.

Please make additional comments on the back. (Por favor de hacer sus comentarios adicionales atrás de esta forma.)

This comment form may be turned in tonight, mailed, or emailed by May 30, 2013 to the address below:
(Esta forma de comentario se puede regresar esta noche, por correo postal, o por correo electrónico antes del 30 de mayo de 2013 a:)

Director of Project Development
Texas Department of Transportation – Houston District
P.O. Box 1386
Houston, Texas 77251-1386
Email: hou-piowebmail@txdot.gov

COMMENT FORM
(FORMA DE COMENTARIO)

Public Hearing – US 59 (from Spur 10 to SH 99)
(Audiencia Pública – US 59 (desde Spur 10 hasta SH 99))

CSJ Nos. 0027-12-097, 0027-12-105, 0027-12-106, and 0027-12-114
May 16, 2013
(16 de mayo de 2013)

__**I am an Elected Official** (Soy Funcionario/a) **Position** (Posición):_____

Name and Mailing Address (Optional) (Nombre y Dirección [Opcional]):
Name (Nombre) Danyel Moore
Address (Dirección) 30444 Southwest Freeway Rosenberg, TX 77471
Email Address (Dirección de Correo Electrónico) dmoore@ocusoft.com
Telephone (Teléfono) 832-782-7849

PLEASE CHECK THE APPROPRIATE ITEMS BELOW: (POR FAVOR COMPREBRE LOS ARTÍCULOS SIGUIENTES QUE SEAN APROPIADOS)

I am primarily interested in the project from the standpoint of a: (Estoy interesado en el proyecto del punto de vista de:)
__**Residential property owner or renter** (Propietario o inquilino residencial) __**Business property owner or lessee** (Propietario o inquilino del negocio)
√**Other (Please explain)** (Otro [Por favor de explicar]) employee of Ocusoft (local business)

Per Texas Transportation Code, §201.811(a)(5): check each of the following boxes that apply to you: (Por Código de Transportación de Tejas, §201.811(a)(5): apunte todo que aplique:)
__I am employed by TxDOT (Soy empleado de TxDOT)
__I do business with TxDOT (Tengo oficio con TxDOT)
__I could benefit monetarily from the project or other item about which I am commenting (Puedo beneficar monetariamente por hecho de este proyecto u otro asunto de cual estoy comentando)

How did you learn about this hearing? (¿Como se entero usted de esta audiencia?)

√**Newspaper** (Periódico) __**Notice in the Mail** (Aviso por Correo) __**Yard Signs** (Letreros en Jardines)
√**Other** (Please explain) (Otro [Por favor de explicar]) employer

Do you support the proposed project? (¿Apoya usted el proyecto propuesto?) ___ **Yes** (Sí) X **No** (No) ___**Undecided** (No he decidido)

COMMENTS (COMENTARIOS): Our safety is at risk, DPS f/law enforcement make traffic stops all the time. Why not move over to the other side there is nothing but field and its for sale. turning lane at the ~~end~~ intersection of frontage is not supported by traffic in the area
move the lanes to the south at least 100 feet
dead man curve need to be straight it will be less accident

Please make additional comments on the back. (Por favor de hacer sus comentarios adicionales atrás de esta forma.)

This comment form may be turned in tonight, mailed, or emailed by May 30, 2013 to the address below:
(Esta forma de comentario se puede regresar esta noche, por correo postal, o por correo electrónico antes del 30 de mayo de 2013 a:)

Director of Project Development
Texas Department of Transportation – Houston District
P.O. Box 1386
Houston, Texas 77251-1386
Email: hou-piowebmail@txdot.gov

COMMENT FORM
(FORMA DE COMENTARIO)

Public Hearing – US 59 (from Spur 10 to SH 99)
(Audiencia Pública – US 59 (desde Spur 10 hasta SH 99))

CSJ Nos. 0027-12-097, 0027-12-105, 0027-12-106, and 0027-12-114
May 16, 2013
(16 de mayo de 2013)

__**I am an Elected Official** (Soy Funcionario/a) **Position** (Posición):_____

Name and Mailing Address (Optional) (Nombre y Dirección [Opcional]):
Name (Nombre) Herbert Castille
Address (Dirección) 30444 South West Freeway
Email Address (Dirección de Correo Electrónico)_____
Telephone (Teléfono)_____

PLEASE CHECK THE APPROPRIATE ITEMS BELOW: (POR FAVOR COMPREBRE LOS ARTÍCULOS SIGUIENTES QUE SEAN APROPIADOS)

I am primarily interested in the project from the standpoint of a: (Estoy interesado en el proyecto del punto de vista de:)
__**Residential property owner or renter** (Propietario o inquilino residencial) __**Business property owner or lessee** (Propietario o inquilino del negocio)
✓**Other (Please explain)** (Otro [Por favor de explicar]) Ocusoft Employee

Per Texas Transportation Code, §201.811(a)(5): check each of the following boxes that apply to you: (Por Código de Transportación de Tejas, §201.811(a)(5): apunte todo que aplique:)
__I am employed by TxDOT (Soy empleado de TxDOT)
__I do business with TxDOT (Tengo oficio con TxDOT)
__I could benefit monetarily from the project or other item about which I am commenting (Puedo beneficar monetariamente por hecho de este proyecto u otro asunto de cual estoy comentando)

How did you learn about this hearing? (¿Como se entero usted de esta audiencia?)
✓**Newspaper** (Periódico) __**Notice in the Mail** (Aviso por Correo) __**Yard Signs** (Letreros en Jardines)
__**Other** (Please explain) (Otro [Por favor de explicar])_____

Do you support the proposed project? (¿Apoya usted el proyecto propuesto?) ___ **Yes** (Sí) ✓ **No** (No) ___**Undecided** (No he decidido)

COMMENTS (COMENTARIOS): Safety / Noise haveing a hard time trying to get in the job with the big trucks on the Feeda. Also don't like dead mans curve.

Please make additional comments on the back. (Por favor de hacer sus comentarios adicionales atrás de esta forma.)

This comment form may be turned in tonight, mailed, or emailed by May 30, 2013 to the address below:
(Esta forma de comentario se puede regresar esta noche, por correo postal, o por correo electrónico antes del 30 de mayo de 2013 a:)

Director of Project Development
Texas Department of Transportation – Houston District
P.O. Box 1386
Houston, Texas 77251-1386
Email: hou-piowebmail@txdot.gov

COMMENT FORM
(FORMA DE COMENTARIO)

Public Hearing – US 59 (from Spur 10 to SH 99)
(Audiencia Pública – US 59 (desde Spur 10 hasta SH 99))

CSJ Nos. 0027-12-097, 0027-12-105, 0027-12-106, and 0027-12-114
May 16, 2013
(16 de mayo de 2013)

__**I am an Elected Official** (Soy Funcionario/a) **Position** (Posición):_____

Name and Mailing Address (Optional) (Nombre y Dirección [Opcional]):
Name (Nombre) Ofelia Rocha - Employee at Ocusoft. Inc.
Address (Dirección) 1519 Ave D Ros. Tx 77471 / work @ 30444 SW Fwy Ros. Tx 7747
Email Address (Dirección de Correo Electrónico) oferoc@yahoo.com
Telephone (Teléfono) 832-230-7638

PLEASE CHECK THE APPROPRIATE ITEMS BELOW: (POR FAVOR COMPREBRE LOS ARTÍCULOS SIGUIENTES QUE SEAN APROPIADOS)

I am primarily interested in the project from the standpoint of a: (Estoy interesado en el proyecto del punto de vista de:)
__**Residential property owner or renter** (Propietario o inquilino residencial) __**Business property owner or lessee** (Propietario o inquilino del negocio)
✓**Other (Please explain)** (Otro [Por favor de explicar]) Employee at Ocusoft, Inc. 30444 SW Fwy Ros. Tx 77471.

Per Texas Transportation Code, §201.811(a)(5): check each of the following boxes that apply to you: (Por Código de Transportación de Tejas, §201.811(a)(5): apunte todo que aplique:)
__I am employed by TxDOT (Soy empleado de TxDOT)
__I do business with TxDOT (Tengo oficio con TxDOT)
__I could benefit monetarily from the project or other item about which I am commenting (Puedo beneficar monetariamente por hecho de este proyecto u otro asunto de cual estoy comentando)

How did you learn about this hearing? (¿Como se entero usted de esta audiencia?)
✓**Newspaper** (Periódico) __**Notice in the Mail** (Aviso por Correo) __**Yard Signs** (Letreros en Jardines)
__**Other** (Please explain) (Otro [Por favor de explicar])_____

Do you support the proposed project? (¿Apoya usted el proyecto propuesto?) ___ **Yes** (Sí) ✓ **No** (No) ___**Undecided** (No he decidido)

COMMENTS (COMENTARIOS): I am worried about my Saftey. Just recently an 18 wheeler ran off the road just a few yards away from Ocusoft. Can you imagine if there had not been empty land there? Dps/law enforcement does frequent stops infront of our building. The last thing we need is for a stop to go wrong. There is not enough traffic for such a big expansion. If plans get changed dead mans curve should be considered.

Please make additional comments on the back. (Por favor de hacer sus comentarios adicionales atrás de esta forma.)

This comment form may be turned in tonight, mailed, or emailed by May 30, 2013 to the address below:
(Esta forma de comentario se puede regresar esta noche, por correo postal, o por correo electrónico antes del 30 de mayo de 2013 a:)
Director of Project Development
Texas Department of Transportation – Houston District
P.O. Box 1386
Houston, Texas 77251-1386
Email: hou-piowebmail@txdot.gov

COMMENT FORM
(FORMA DE COMENTARIO)

Public Hearing – US 59 (from Spur 10 to SH 99)
(Audiencia Pública – US 59 (desde Spur 10 hasta SH 99))

CSJ Nos. 0027-12-097, 0027-12-105, 0027-12-106, and 0027-12-114
May 16, 2013
(16 de mayo de 2013)

__**I am an Elected Official** (Soy Funcionario/a) **Position** (Posición):_____

Name and Mailing Address (Optional) (Nombre y Dirección [Opcional]):
Name (Nombre) Cassandra Vargas
Address (Dirección) 1200 George St Bos. Tx works @ 30444 SW Fry Bos Tx 77471
Email Address (Dirección de Correo Electrónico) salazar.cassandra@yahoo.com
Telephone (Teléfono) 281-830-7990

PLEASE CHECK THE APPROPRIATE ITEMS BELOW: (POR FAVOR COMPREBRE LOS ARTÍCULOS SIGUIENTES QUE SEAN APROPIADOS)

I am primarily interested in the project from the standpoint of a: (Estoy interesado en el proyecto del punto de vista de:)
__**Residential property owner or renter** (Propietario o inquilino residencial) __**Business property owner or lessee** (Propietario o inquilino del negocio)
✓**Other (Please explain)** (Otro [Por favor de explicar]) Employee at OcuSoft Inc. 30444 SW Fway Bos. Tx 77471

Per Texas Transportation Code, §201.811(a)(5): check each of the following boxes that apply to you: (Por Código de Transportación de Tejas, §201.811(a)(5): apunte todo que aplique:)
__I am employed by TxDOT (Soy empleado de TxDOT)
__I do business with TxDOT (Tengo oficio con TxDOT)
__I could benefit monetarily from the project or other item about which I am commenting (Puedo beneficar monetariamente por hecho de este proyecto u otro asunto de cual estoy comentando)

How did you learn about this hearing? (¿Como se entero usted de esta audiencia?)
✓**Newspaper** (Periódico) __**Notice in the Mail** (Aviso por Correo) __**Yard Signs** (Letreros en Jardines)
__**Other** (Please explain) (Otro [Por favor de explicar]) _____

Do you support the proposed project? (¿Apoya usted el proyecto propuesto?) ___ **Yes** (Sí) ✓ **No** (No) ___**Undecided** (No he decidido)

COMMENTS (COMENTARIOS): This will make it very noisy, Not safe being so close to our building.
Also when DPS stops cars a truck it will be right at our front door.
There is land right across from us that is for sell use that side.

Please make additional comments on the back. (Por favor de hacer sus comentarios adicionales atrás de esta forma.)

This comment form may be turned in tonight, mailed, or emailed by May 30, 2013 to the address below:
(Esta forma de comentario se puede regresar esta noche, por correo postal, o por correo electrónico antes del 30 de mayo de 2013 a:)

Director of Project Development
Texas Department of Transportation – Houston District
P.O. Box 1386
Houston, Texas 77251-1386
Email: hou-piowebmail@txdot.gov

COMMENT FORM
(FORMA DE COMENTARIO)

Public Hearing – US 59 (from Spur 10 to SH 99)
(Audiencia Pública – US 59 (desde Spur 10 hasta SH 99))

CSJ Nos. 0027-12-097, 0027-12-105, 0027-12-106, and 0027-12-114
May 16, 2013
(16 de mayo de 2013)

__**I am an Elected Official** (Soy Funcionario/a) **Position** (Posición):_____

Name and Mailing Address (Optional) (Nombre y Dirección [Opcional]):
Name (Nombre) Gonzales Monica
Address (Dirección) 30444 Southwest Freeway (home address 609 N 2nd street Richmond Tx 77469
Email Address (Dirección de Correo Electrónico) monicagonzales26@yahoo.com
Telephone (Teléfono) 713-517-8342

PLEASE CHECK THE APPROPRIATE ITEMS BELOW: (POR FAVOR COMPREBRE LOS ARTÍCULOS SIGUIENTES QUE SEAN APROPIADOS)

I am primarily interested in the project from the standpoint of a: (Estoy interesado en el proyecto del punto de vista de:)
__**Residential property owner or renter** (Propietario o inquilino residencial) __**Business property owner or lessee** (Propietario o inquilino del negocio)

X**Other (Please explain)** (Otro [Por favor de explicar]) employee at ocusoft

Per Texas Transportation Code, §201.811(a)(5): check each of the following boxes that apply to you: (Por Código de Transportación de Tejas, §201.811(a)(5): apunte todo que aplique:)
__I am employed by TxDOT (Soy empleado de TxDOT)
__I do business with TxDOT (Tengo oficio con TxDOT)
__I could benefit monetarily from the project or other item about which I am commenting (Puedo beneficar monetariamente por hecho de este proyecto u otro asunto de cual estoy comentando)

How did you learn about this hearing? (¿Como se entero usted de esta audiencia?)
X**Newspaper** (Periódico) __**Notice in the Mail** (Aviso por Correo) __**Yard Signs** (Letreros en Jardines)
__**Other** (Please explain) (Otro [Por favor de explicar]) _____

Do you support the proposed project? (¿Apoya usted el proyecto propuesto?) ___ **Yes** (Sí) X **No** (No) ___**Undecided** (No he decidido)

COMMENTS (COMENTARIOS): DPS / Law enforcement stop traffic. Safty of employees at ocusoft, the noise of cars passing by. Turning lanes at turning point not not supported by traffic in the area. Please move South 100 ft Dead man's curve.

Please make additional comments on the back. (Por favor de hacer sus comentarios adicionales atrás de esta forma.)

This comment form may be turned in tonight, mailed, or emailed by May 30, 2013 to the address below:
(Esta forma de comentario se puede regresar esta noche, por correo postal, o por correo electrónico antes del 30 de mayo de 2013 a:)

Director of Project Development
Texas Department of Transportation – Houston District
P.O. Box 1386
Houston, Texas 77251-1386
Email: hou-piowebmail@txdot.gov

COMMENT FORM
(FORMA DE COMENTARIO)

Public Hearing – US 59 (from Spur 10 to SH 99)
(Audiencia Pública – US 59 (desde Spur 10 hasta SH 99))

CSJ Nos. 0027-12-097, 0027-12-105, 0027-12-106, and 0027-12-114
May 16, 2013
(16 de mayo de 2013)

__**I am an Elected Official** (Soy Funcionario/a) **Position** (Posición):_____

Name and Mailing Address (Optional) (Nombre y Dirección [Opcional]):
Name (Nombre) ~~[illegible]~~ Rose Schraeder 25611 Turnstone Oaks Richmond I work at
Address (Dirección) 30444 Southwest Freeway Rosenberg, TX 77471
Email Address (Dirección de Correo Electrónico) rose@schraeder.net
Telephone (Teléfono) 281 839 4887

PLEASE CHECK THE APPROPRIATE ITEMS BELOW: (POR FAVOR COMPREBRE LOS ARTÍCULOS SIGUIENTES QUE SEAN APROPIADOS)

I am primarily interested in the project from the standpoint of a: (Estoy interesado en el proyecto del punto de vista de:)
__**Residential property owner or renter** (Propietario o inquilino residencial) __**Business property owner or lessee** (Propietario o inquilino del negocio)
✓**Other (Please explain)** (Otro [Por favor de explicar]) employee of Ocusoft concerned for safety of people and employees of Ocusoft

Per Texas Transportation Code, §201.811(a)(5): check each of the following boxes that apply to you: (Por Código de Transportación de Tejas, §201.811(a)(5): apunte todo que aplique:)
__I am employed by TxDOT (Soy empleado de TxDOT)
__I do business with TxDOT (Tengo oficio con TxDOT)
__I could benefit monetarily from the project or other item about which I am commenting (Puedo beneficar monetariamente por hecho de este proyecto u otro asunto de cual estoy comentando)

How did you learn about this hearing? (¿Como se entero usted de esta audiencia?)

✓**Newspaper** (Periódico) __**Notice in the Mail** (Aviso por Correo) __**Yard Signs** (Letreros en Jardines)
__**Other** (Please explain) (Otro [Por favor de explicar]) _____

Do you support the proposed project? (¿Apoya usted el proyecto propuesto?) ___ **Yes** (Sí) ✓ **No** (No) ___**Undecided** (No he decidido)

COMMENTS (COMENTARIOS): I am concerned about our safety, the noise level, the trucks coming off the highway. If it could be moved 100 feet south it would go into the cotton fields across from our building. By going south it would also improve "dead man's curve". Also there is not enough exiting feeder traffic to warrant that many lanes for an exit

Please make additional comments on the back. (Por favor de hacer sus comentarios adicionales atrás de esta forma.)

This comment form may be turned in tonight, mailed, or emailed by May 30, 2013 to the address below:
(Esta forma de comentario se puede regresar esta noche, por correo postal, o por correo electrónico antes del 30 de mayo de 2013 a:)

Director of Project Development
Texas Department of Transportation – Houston District
P.O. Box 1386
Houston, Texas 77251-1386
Email: hou-piowebmail@txdot.gov

COMMENT FORM
(FORMA DE COMENTARIO)

Public Hearing – US 59 (from Spur 10 to SH 99)
(Audiencia Pública – US 59 (desde Spur 10 hasta SH 99))

CSJ Nos. 0027-12-097, 0027-12-105, 0027-12-106, and 0027-12-114
May 16, 2013
(16 de mayo de 2013)

__**I am an Elected Official** (Soy Funcionario/a) **Position** (Posición):_____

Name and Mailing Address (Optional) (Nombre y Dirección [Opcional]):
Name (Nombre) BARBARA KUNZ (WORK AT 30444 SWFY)
Address (Dirección) 1208 MULCAHY
Email Address (Dirección de Correo Electrónico) LJK42@YAHOO.COM
Telephone (Teléfono) 281-342-8749

PLEASE CHECK THE APPROPRIATE ITEMS BELOW: (POR FAVOR COMPREBRE LOS ARTÍCULOS SIGUIENTES QUE SEAN APROPIADOS)

I am primarily interested in the project from the standpoint of a: (Estoy interesado en el proyecto del punto de vista de:)
✓ **Residential property owner or renter** (Propietario o inquilino residencial) __**Business property owner or lessee** (Propietario o inquilino del negocio)
✓ **Other (Please explain)** (Otro [Por favor de explicar]) EMPLOYEE OF OCUSOFT (30444 SWFY)

Per Texas Transportation Code, §201.811(a)(5): check each of the following boxes that apply to you: (Por Código de Transportación de Tejas, §201.811(a)(5): apunte todo que aplique:)
__I am employed by TxDOT (Soy empleado de TxDOT)
__I do business with TxDOT (Tengo oficio con TxDOT)
__I could benefit monetarily from the project or other item about which I am commenting (Puedo beneficar monetariamente por hecho de este proyecto u otro asunto de cual estoy comentando)

How did you learn about this hearing? (¿Como se entero usted de esta audiencia?)
✓ **Newspaper** (Periódico) __**Notice in the Mail** (Aviso por Correo) __**Yard Signs** (Letreros en Jardines)
__**Other** (Please explain) (Otro [Por favor de explicar]) _____

Do you support the proposed project? (¿Apoya usted el proyecto propuesto?) ___ **Yes** (Sí) ✓ **No** (No) AS PROPOSED ___**Undecided** (No he decidido)

COMMENTS (COMMENTARIOS): WILL CAUSE SAFETY ISSUES FOR ENTERING MY OFFICE AT 30444 SWFY ~~SH 99~~ ROAD. THIS COULD BE MORE COST WISE TO MOVE THE ROAD MORE SOUTHERLY INVOLVING CROP LAND AND NOT COMMERCIAL PROPERTY OF OCUSOFT. SINCE WE WILL NOT BE ABLE TO HAVE ~~[illegible]~~ A FENCE AROUND OUR PROPERTY I WILL BE AFRAID OF THE TYPE OF TRAFFIC. OUR ACCESS TO MY JOB WILL BE INCONVIENT. WHY AREN'T WE USING THE GREEN AREA INSTEAD OF PRIVATE PROPERTY OWNERS. WHY ARE WE SPENDING MONEY ON A PROJECT THAT WILL NOT BENEFIT SAFETY ISSUES AND TRAFFIC. DPS & LAW ENFORCEMENT STOP TRAFFIC CONSTANTLY.

Please make additional comments on the back. (Por favor de hacer sus comentarios adicionales atrás de esta forma.)
TURN LANE DOES NOT SUPPORTED BY TRAFFIC IN THE AREA

This comment form may be turned in tonight, mailed, or emailed by May 30, 2013 to the address below:
(Esta forma de comentario se puede regresar esta noche, por correo postal, o por correo electrónico antes del 30 de mayo de 2013 a:)

Director of Project Development
Texas Department of Transportation – Houston District
P.O. Box 1386
Houston, Texas 77251-1386
Email: hou-piowebmail@txdot.gov

* ASK THE DESIGNER WHY THEY ARE USING IMPROVED PROPERTY INSTEAD OF UNIMPROVED AREA.

COMMENT FORM
(FORMA DE COMENTARIO)

Public Hearing – US 59 (from Spur 10 to SH 99)
(Audiencia Pública – US 59 (desde Spur 10 hasta SH 99))

CSJ Nos. 0027-12-097, 0027-12-105, 0027-12-106, and 0027-12-114
May 16, 2013
(16 de mayo de 2013)

__**I am an Elected Official** (Soy Funcionario/a) **Position** (Posición):_____

Name and Mailing Address (Optional) (Nombre y Dirección [Opcional]):
Name (Nombre) Guadalupe Alvarez
Address (Dirección) 1039 Lindsey Dr/Rosenberg, Tx 77471/work @ 30844 S.W Freeway/Rosenberg Tx 77471
Email Address (Dirección de Correo Electrónico)_____
Telephone (Teléfono)_____

PLEASE CHECK THE APPROPRIATE ITEMS BELOW: (POR FAVOR COMPREBRE LOS ARTÍCULOS SIGUIENTES QUE SEAN APROPIADOS)

I am primarily interested in the project from the standpoint of a: (Estoy interesado en el proyecto del punto de vista de:)
__**Residential property owner or renter** (Propietario o inquilino residencial) __**Business property owner or lessee** (Propietario o inquilino del negocio)
✓**Other (Please explain)** (Otro [Por favor de explicar]) work at Ocusoft

Per Texas Transportation Code, §201.811(a)(5): check each of the following boxes that apply to you: (Por Código de Transportación de Tejas, §201.811(a)(5): apunte todo que aplique:)
__I am employed by TxDOT (Soy empleado de TxDOT)
__I do business with TxDOT (Tengo oficio con TxDOT)
__I could benefit monetarily from the project or other item about which I am commenting (Puedo beneficar monetariamente por hecho de este proyecto u otro asunto de cual estoy comentando)

How did you learn about this hearing? (¿Como se entero usted de esta audiencia?)
✓**Newspaper** (Periódico) __**Notice in the Mail** (Aviso por Correo) __**Yard Signs** (Letreros en Jardines)
__**Other** (Please explain) (Otro [Por favor de explicar])_____

Do you support the proposed project? (¿Apoya usted el proyecto propuesto?) ___ **Yes** (Sí) ✓ **No** (No) ___**Undecided** (No he decidido)

COMMENTS (COMENTARIOS): It will be to noisy, for my safety, law enforcement stops traffic in front of our office. If land is needed moved it into the cotton fields in front of us. During lones ~~out~~ the intersection on frontage road is not supported by traffic in the area. If the road @ Dead man's curve was is moved the ~~[illegible]~~ freeway will run straight and it would be eliminated.

Please make additional comments on the back. (Por favor de hacer sus comentarios adicionales atrás de esta forma.)

This comment form may be turned in tonight, mailed, or emailed by May 30, 2013 to the address below:
(Esta forma de comentario se puede regresar esta noche, por correo postal, o por correo electrónico antes del 30 de mayo de 2013 a:)

Director of Project Development
Texas Department of Transportation – Houston District
P.O. Box 1386
Houston, Texas 77251-1386
Email: hou-piowebmail@txdot.gov

COMMENT FORM
(FORMA DE COMENTARIO)

Public Hearing – US 59 (from Spur 10 to SH 99)
(Audiencia Pública – US 59 (desde Spur 10 hasta SH 99))

CSJ Nos. 0027-12-097, 0027-12-105, 0027-12-106, and 0027-12-114
May 16, 2013
(16 de mayo de 2013)

__**I am an Elected Official** (Soy Funcionario/a) **Position** (Posición):_____

Name and Mailing Address (Optional) (Nombre y Dirección [Opcional]):
Name (Nombre) Amy Estrada
Address (Dirección) 22755 Wildwood Park Rd. #734
Email Address (Dirección de Correo Electrónico) jeeplib23@yahoo.com
Telephone (Teléfono) 832-392-5229

PLEASE CHECK THE APPROPRIATE ITEMS BELOW: (POR FAVOR COMPREBRE LOS ARTÍCULOS SIGUIENTES QUE SEAN APROPIADOS)

I am primarily interested in the project from the standpoint of a: (Estoy interesado en el proyecto del punto de vista de:)
__**Residential property owner or renter** (Propietario o inquilino residencial)
__**Business property owner or lessee** (Propietario o inquilino del negocio)
✓**Other (Please explain)** (Otro [Por favor de explicar]) Ocusoft - 3077 SW Freeway Rosenberg TX 77471

Per Texas Transportation Code, §201.811(a)(5): check each of the following boxes that apply to you: (Por Código de Transportación de Tejas, §201.811(a)(5): apunte todo que aplique:)
__I am employed by TxDOT (Soy empleado de TxDOT)
__I do business with TxDOT (Tengo oficio con TxDOT)
__I could benefit monetarily from the project or other item about which I am commenting (Puedo beneficar monetariamente por hecho de este proyecto u otro asunto de cual estoy comentando)

How did you learn about this hearing? (¿Como se entero usted de esta audiencia?)

__**Newspaper** (Periódico) __**Notice in the Mail** (Aviso por Correo) __**Yard Signs** (Letreros en Jardines)
✓**Other** (Please explain) (Otro [Por favor de explicar]) Employer

Do you support the proposed project? (¿Apoya usted el proyecto propuesto?) __ **Yes** (Sí) ✓ **No** (No) __**Undecided** (No he decidido)

COMMENTS (COMENTARIOS): Safety Reasons, Traffic would be too close to building, Will cause excessive noise and pollution. I dont want anyone crashing into the building!

Please make additional comments on the back. (Por favor de hacer sus comentarios adicionales atrás de esta forma.)

This comment form may be turned in tonight, mailed, or emailed by May 30, 2013 to the address below:
(Esta forma de comentario se puede regresar esta noche, por correo postal, o por correo electrónico antes del 30 de mayo de 2013 a:)

Director of Project Development
Texas Department of Transportation – Houston District
P.O. Box 1386
Houston, Texas 77251-1386
Email: hou-piowebmail@txdot.gov

COMMENT FORM
(FORMA DE COMENTARIO)

Public Hearing – US 59 (from Spur 10 to SH 99)
(Audiencia Pública – US 59 (desde Spur 10 hasta SH 99))

CSJ Nos. 0027-12-097, 0027-12-105, 0027-12-106, and 0027-12-114
May 16, 2013
(16 de mayo de 2013)

__**I am an Elected Official** (Soy Funcionario/a) **Position** (Posición):_____

Name and Mailing Address (Optional) (Nombre y Dirección [Opcional]):
Name (Nombre) Karen L. Gates
Address (Dirección) 7730 Ellis DR, Houston, Tx. 77419
Email Address (Dirección de Correo Electrónico) Kgates@OcuSoft.com
Telephone (Teléfono) 281-932-4963

PLEASE CHECK THE APPROPRIATE ITEMS BELOW: (POR FAVOR COMPREBRE LOS ARTÍCULOS SIGUIENTES QUE SEAN APROPIADOS)

I am primarily interested in the project from the standpoint of a: (Estoy interesado en el proyecto del punto de vista de:)
__**Residential property owner or renter** (Propietario o inquilino residencial) __**Business property owner or lessee** (Propietario o inquilino del negocio) Ocusoft 3044 SW Freeway
✓**Other (Please explain)** (Otro [Por favor de explicar]) employee of the business it will affect

Per Texas Transportation Code, §201.811(a)(5): check each of the following boxes that apply to you: (Por Código de Transportación de Tejas, §201.811(a)(5): apunte todo que aplique:)
__I am employed by TxDOT (Soy empleado de TxDOT)
__I do business with TxDOT (Tengo oficio con TxDOT)
__I could benefit monetarily from the project or other item about which I am commenting (Puedo beneficar monetariamente por hecho de este proyecto u otro asunto de cual estoy comentando)

How did you learn about this hearing? (¿Como se entero usted de esta audiencia?)

__**Newspaper** (Periódico) __**Notice in the Mail** (Aviso por Correo) __**Yard Signs** (Letreros en Jardines)
✓**Other** (Please explain) (Otro [Por favor de explicar]) employer

Do you support the proposed project? (¿Apoya usted el proyecto propuesto?) __**Yes** (Sí) ✓**No** (No) __**Undecided** (No he decidido)

COMMENTS (COMENTARIOS): I do not support this project because the freeway would come too close to my workplace and would pose a health hazard.

Please make additional comments on the back. (Por favor de hacer sus comentarios adicionales atrás de esta forma.)

This comment form may be turned in tonight, mailed, or emailed by May 30, 2013 to the address below:
(Esta forma de comentario se puede regresar esta noche, por correo postal, o por correo electrónico antes del 30 de mayo de 2013 a:)

Director of Project Development
Texas Department of Transportation – Houston District
P.O. Box 1386
Houston, Texas 77251-1386
Email: hou-piowebmail@txdot.gov

COMMENT FORM
(FORMA DE COMENTARIO)

Public Hearing – US 59 (from Spur 10 to SH 99)
(Audiencia Pública – US 59 (desde Spur 10 hasta SH 99))

CSJ Nos. 0027-12-097, 0027-12-105, 0027-12-106, and 0027-12-114
May 16, 2013
(16 de mayo de 2013)

__**I am an Elected Official** (Soy Funcionario/a) **Position** (Posición):_____

Name and Mailing Address (Optional) (Nombre y Dirección [Opcional]):
Name (Nombre) Stephanie Ball
Address (Dirección) 2711 Country Place Dr. Richmond Tx 77406.
Email Address (Dirección de Correo Electrónico)
Telephone (Teléfono) 281-232-7058.

PLEASE CHECK THE APPROPRIATE ITEMS BELOW: (POR FAVOR COMPREBRE LOS ARTÍCULOS SIGUIENTES QUE SEAN APROPIADOS)

I am primarily interested in the project from the standpoint of a: (Estoy interesado en el proyecto del punto de vista de:)
__**Residential property owner or renter** (Propietario o inquilino residencial) __**Business property owner or lessee** (Propietario o inquilino del negocio)
✓**Other (Please explain)** (Otro [Por favor de explicar]) Ocusoft - 3044 SW Freeway Rosenberg 77471

Per Texas Transportation Code, §201.811(a)(5): check each of the following boxes that apply to you: (Por Código de Transportación de Tejas, §201.811(a)(5): apunte todo que aplique:)
__I am employed by TxDOT (Soy empleado de TxDOT)
__I do business with TxDOT (Tengo oficio con TxDOT)
__I could benefit monetarily from the project or other item about which I am commenting (Puedo beneficar monetariamente por hecho de este proyecto u otro asunto de cual estoy comentando)

How did you learn about this hearing? (¿Como se entero usted de esta audiencia?)

__**Newspaper** (Periódico) __**Notice in the Mail** (Aviso por Correo) __**Yard Signs** (Letreros en Jardines)
✓**Other** (Please explain) (Otro [Por favor de explicar]) Employer.

Do you support the proposed project? (¿Apoya usted el proyecto propuesto?) __ **Yes** (Sí) ✓ **No** (No) __**Undecided** (No he decidido)

COMMENTS (COMENTARIOS): Will allow easy access to break ins & will be dangerous to the people who work here. The noise level will rise & we do most of our business on the phone.

Please make additional comments on the back. (Por favor de hacer sus comentarios adicionales atrás de esta forma.)

This comment form may be turned in tonight, mailed, or emailed by May 30, 2013 to the address below:
(Esta forma de comentario se puede regresar esta noche, por correo postal, o por correo electrónico antes del 30 de mayo de 2013 a:)

Director of Project Development
Texas Department of Transportation – Houston District
P.O. Box 1386
Houston, Texas 77251-1386
Email: hou-piowebmail@txdot.gov

COMMENT FORM
(FORMA DE COMENTARIO)

Public Hearing – US 59 (from Spur 10 to SH 99)
(Audiencia Pública – US 59 (desde Spur 10 hasta SH 99))

CSJ Nos. 0027-12-097, 0027-12-105, 0027-12-106, and 0027-12-114
May 16, 2013
(16 de mayo de 2013)

__**I am an Elected Official** (Soy Funcionario/a) **Position** (Posición):_____

Name and Mailing Address (Optional) (Nombre y Dirección [Opcional]):
Name (Nombre) BRENDA Schneider
Address (Dirección) 10703 Alex Drive Needville, TX 77461
Email Address (Dirección de Correo Electrónico) brendaSchneider0715@yahoo.com
Telephone (Teléfono) 832-586-5604

PLEASE CHECK THE APPROPRIATE ITEMS BELOW: (POR FAVOR COMPREBRE LOS ARTÍCULOS SIGUIENTES QUE SEAN APROPIADOS)

I am primarily interested in the project from the standpoint of a: (Estoy interesado en el proyecto del punto de vista de:)
__**Residential property owner or renter** (Propietario o inquilino residencial) __**Business property owner or lessee** (Propietario o inquilino del negocio)
✓**Other (Please explain)** (Otro [Por favor de explicar]) Where I work (@ OCUSOFT) 30444 SW Freeway Rosenberg 77471

Per Texas Transportation Code, §201.811(a)(5): check each of the following boxes that apply to you: (Por Código de Transportación de Tejas, §201.811(a)(5): apunte todo que aplique:)
__I am employed by TxDOT (Soy empleado de TxDOT)
__I do business with TxDOT (Tengo oficio con TxDOT)
__I could benefit monetarily from the project or other item about which I am commenting (Puedo beneficar monetariamente por hecho de este proyecto u otro asunto de cual estoy comentando)

How did you learn about this hearing? (¿Como se entero usted de esta audiencia?)

__**Newspaper** (Periódico) __**Notice in the Mail** (Aviso por Correo) __**Yard Signs** (Letreros en Jardines)
✓**Other** (Please explain) (Otro [Por favor de explicar]) Employer (OCUSOFT)

Do you support the proposed project? (¿Apoya usted el proyecto propuesto?) __**Yes** (Sí) ✓**No** (No) __**Undecided** (No he decidido)

COMMENTS (COMENTARIOS): Proposes danger to our building and our people who work @ the front of the building will cause excessive noise + pollution will allow easy access for break in

Please make additional comments on the back. (Por favor de hacer sus comentarios adicionales atrás de esta forma.)

This comment form may be turned in tonight, mailed, or emailed by May 30, 2013 to the address below:
(Esta forma de comentario se puede regresar esta noche, por correo postal, o por correo electrónico antes del 30 de mayo de 2013 a:)

Director of Project Development
Texas Department of Transportation – Houston District
P.O. Box 1386
Houston, Texas 77251-1386
Email: hou-piowebmail@txdot.gov

COMMENT FORM
(FORMA DE COMENTARIO)

Public Hearing – US 59 (from Spur 10 to SH 99)
(Audiencia Pública – US 59 (desde Spur 10 hasta SH 99))

CSJ Nos. 0027-12-097, 0027-12-105, 0027-12-106, and 0027-12-114
May 16, 2013
(16 de mayo de 2013)

__**I am an Elected Official** (Soy Funcionario/a) **Position** (Posición):_____

Name and Mailing Address (Optional) (Nombre y Dirección [Opcional]):
Name (Nombre) Donesha Gartica
Address (Dirección) 2000 LAMAR Dr., Richmond, TX, 77469
Email Address (Dirección de Correo Electrónico) d.gartica@yahoo.com
Telephone (Teléfono) 8326092168 28

PLEASE CHECK THE APPROPRIATE ITEMS BELOW: (POR FAVOR COMPREBRE LOS ARTÍCULOS SIGUIENTES QUE SEAN APROPIADOS)

I am primarily interested in the project from the standpoint of a: (Estoy interesado en el proyecto del punto de vista de:)
✓**Residential property owner or renter** (Propietario o inquilino residencial)
__**Business property owner or lessee** (Propietario o inquilino del negocio)
__**Other (Please explain)** (Otro [Por favor de explicar]) Owner
3044 SW Freeway Rosenberg TX 77471

Per Texas Transportation Code, §201.811(a)(5): check each of the following boxes that apply to you: (Por Código de Transportación de Tejas, §201.811(a)(5): apunte todo que aplique:)
__I am employed by TxDOT (Soy empleado de TxDOT)
__I do business with TxDOT (Tengo oficio con TxDOT)
__I could benefit monetarily from the project or other item about which I am commenting (Puedo beneficar monetariamente por hecho de este proyecto u otro asunto de cual estoy comentando)

How did you learn about this hearing? (¿Como se entero usted de esta audiencia?)

__**Newspaper** (Periódico) __**Notice in the Mail** (Aviso por Correo) __**Yard Signs** (Letreros en Jardines)
__**Other** (Please explain) (Otro [Por favor de explicar]) Employer

Do you support the proposed project? (¿Apoya usted el proyecto propuesto?) ___ **Yes** (Sí) ✓ **No** (No) ___**Undecided** (No he decidido)

COMMENTS (COMENTARIOS): Going to be too much traffic and it's going to be to close to the building. It is also going to take away a big portion of the land in the front of the building.

Please make additional comments on the back. (Por favor de hacer sus comentarios adicionales atrás de esta forma.)

This comment form may be turned in tonight, mailed, or emailed by May 30, 2013 to the address below:
(Esta forma de comentario se puede regresar esta noche, por correo postal, o por correo electrónico antes del 30 de mayo de 2013 a:)

Director of Project Development
Texas Department of Transportation – Houston District
P.O. Box 1386
Houston, Texas 77251-1386
Email: hou-piowebmail@txdot.gov

COMMENT FORM
(FORMA DE COMENTARIO)

Public Hearing – US 59 (from Spur 10 to SH 99)
(Audiencia Pública – US 59 (desde Spur 10 hasta SH 99))

CSJ Nos. 0027-12-097, 0027-12-105, 0027-12-106, and 0027-12-114
May 16, 2013
(16 de mayo de 2013)

__**I am an Elected Official** (Soy Funcionario/a) **Position** (Posición):_____

Name and Mailing Address (Optional) (Nombre y Dirección [Opcional]):
Name (Nombre) Juan Hernandez
Address (Dirección) 1102 Klare AVE, work at 30444 SW FWY
Email Address (Dirección de Correo Electrónico)_____
Telephone (Teléfono)_____

PLEASE CHECK THE APPROPRIATE ITEMS BELOW: (POR FAVOR COMPREBRE LOS ARTÍCULOS SIGUIENTES QUE SEAN APROPIADOS)

I am primarily interested in the project from the standpoint of a: (Estoy interesado en el proyecto del punto de vista de:)
__**Residential property owner or renter** (Propietario o inquilino residencial) __**Business property owner or lessee** (Propietario o inquilino del negocio)
__**Other (Please explain)** (Otro [Por favor de explicar]) Clausoft, 30444 SW Freeway Rosenberg TX 77471

Per Texas Transportation Code, §201.811(a)(5): check each of the following boxes that apply to you: (Por Código de Transportación de Tejas, §201.811(a)(5): apunte todo que aplique:)
__I am employed by TxDOT (Soy empleado de TxDOT)
__I do business with TxDOT (Tengo oficio con TxDOT)
__I could benefit monetarily from the project or other item about which I am commenting (Puedo beneficar monetariamente por hecho de este proyecto u otro asunto de cual estoy comentando)

How did you learn about this hearing? (¿Como se entero usted de esta audiencia?)
✓**Newspaper** (Periódico) __**Notice in the Mail** (Aviso por Correo) __**Yard Signs** (Letreros en Jardines)
__**Other** (Please explain) (Otro [Por favor de explicar])_____

Do you support the proposed project? (¿Apoya usted el proyecto propuesto?) ___ **Yes** (Sí) ✓ **No** (No) ___**Undecided** (No he decidido)

COMMENTS (COMENTARIOS): I, believe that it will be a huge Saftey Issue! I think the plan's should be looked at, again before putting us in danger, it is a busy Hwy. Please thing about the people not just the money. It doesn't hurt to listen sometimes. It was are land before, let it stay that way.

Please make additional comments on the back. (Por favor de hacer sus comentarios adicionales atrás de esta forma.)

This comment form may be turned in tonight, mailed, or emailed by May 30, 2013 to the address below:
(Esta forma de comentario se puede regresar esta noche, por correo postal, o por correo electrónico antes del 30 de mayo de 2013 a:)

Director of Project Development
Texas Department of Transportation – Houston District
P.O. Box 1386
Houston, Texas 77251-1386
Email: hou-piowebmail@txdot.gov

COMMENT FORM
(FORMA DE COMENTARIO)

Public Hearing – US 59 (from Spur 10 to SH 99)
(Audiencia Pública – US 59 (desde Spur 10 hasta SH 99))

CSJ Nos. 0027-12-097, 0027-12-105, 0027-12-106, and 0027-12-114
May 16, 2013
(16 de mayo de 2013)

__**I am an Elected Official** (Soy Funcionario/a) **Position** (Posición):_____

Name and Mailing Address (Optional) (Nombre y Dirección [Opcional]):
Name (Nombre) Guadalupe Espinoza Jr
Address (Dirección) 5710 Riverwood Dr Richmond, TX 77469 / 30444 Southwest Freeway Rosenberg 77471
Email Address (Dirección de Correo Electrónico) Stallout65@yahoo.com
Telephone (Teléfono) (832) 640-5641

PLEASE CHECK THE APPROPRIATE ITEMS BELOW: (POR FAVOR COMPREBRE LOS ARTÍCULOS SIGUIENTES QUE SEAN APROPIADOS)

I am primarily interested in the project from the standpoint of a: (Estoy interesado en el proyecto del punto de vista de:)
__**Residential property owner or renter** (Propietario o inquilino residencial) __**Business property owner or lessee** (Propietario o inquilino del negocio)
✓**Other (Please explain)** (Otro [Por favor de explicar]) Owner
30444 SW Freeway Rosenberg TX 77471

Per Texas Transportation Code, §201.811(a)(5): check each of the following boxes that apply to you: (Por Código de Transportación de Tejas, §201.811(a)(5): apunte todo que aplique:)
__I am employed by TxDOT (Soy empleado de TxDOT)
__I do business with TxDOT (Tengo oficio con TxDOT)
__I could benefit monetarily from the project or other item about which I am commenting (Puedo beneficar monetariamente por hecho de este proyecto u otro asunto de cual estoy comentando)

How did you learn about this hearing? (¿Como se entero usted de esta audiencia?)
✓**Newspaper** (Periódico) __**Notice in the Mail** (Aviso por Correo) __**Yard Signs** (Letreros en Jardines)
__**Other** (Please explain) (Otro [Por favor de explicar])_____

Do you support the proposed project? (¿Apoya usted el proyecto propuesto?) ___ **Yes** (Sí) ✓ **No** (No) ___**Undecided** (No he decidido)

COMMENTS (COMENTARIOS): Safety would be a main concern because of a lot of drug trafficking in the area. I would not want all of my co-worker to be put in danger or myself. Do know about yourselves, but I would like to see my family at the end of the day. It would benefit you a lot more to buy undeveloped property across the street and would be a lot cheaper.

Please make additional comments on the back. (Por favor de hacer sus comentarios adicionales atrás de esta forma.)

This comment form may be turned in tonight, mailed, or emailed by May 30, 2013 to the address below:
(Esta forma de comentario se puede regresar esta noche, por correo postal, o por correo electrónico antes del 30 de mayo de 2013 a:)

Director of Project Development
Texas Department of Transportation – Houston District
P.O. Box 1386
Houston, Texas 77251-1386
Email: hou-piowebmail@txdot.gov

COMMENT FORM
(FORMA DE COMENTARIO)

Public Hearing – US 59 (from Spur 10 to SH 99)
(Audiencia Pública – US 59 (desde Spur 10 hasta SH 99))

CSJ Nos. 0027-12-097, 0027-12-105, 0027-12-106, and 0027-12-114
May 16, 2013
(16 de mayo de 2013)

__**I am an Elected Official** (Soy Funcionario/a) **Position** (Posición):_____

Name and Mailing Address (Optional) (Nombre y Dirección [Opcional]):
Name (Nombre) JOSE FAUSTINO
Address (Dirección) 30444 Southwest Freeway
Email Address (Dirección de Correo Electrónico)_____
Telephone (Teléfono)_____

PLEASE CHECK THE APPROPRIATE ITEMS BELOW: (POR FAVOR COMPREBRE LOS ARTÍCULOS SIGUIENTES QUE SEAN APROPIADOS)

I am primarily interested in the project from the standpoint of a: (Estoy interesado en el proyecto del punto de vista de:)
__**Residential property owner or renter** (Propietario o inquilino residencial) __**Business property owner or lessee** (Propietario o inquilino del negocio)
✓**Other (Please explain)** (Otro [Por favor de explicar]) Work at Oansoft 30444 SW Freeway Rosenberg 77471

Per Texas Transportation Code, §201.811(a)(5): check each of the following boxes that apply to you: (Por Código de Transportación de Tejas, §201.811(a)(5): apunte todo que aplique:)
__I am employed by TxDOT (Soy empleado de TxDOT)
__I do business with TxDOT (Tengo oficio con TxDOT)
__I could benefit monetarily from the project or other item about which I am commenting (Puedo beneficar monetariamente por hecho de este proyecto u otro asunto de cual estoy comentando)

How did you learn about this hearing? (¿Como se entero usted de esta audiencia?)

__**Newspaper** (Periódico) __**Notice in the Mail** (Aviso por Correo) __**Yard Signs** (Letreros en Jardines)
✓**Other** (Please explain) (Otro [Por favor de explicar]) word from co-worker

Do you support the proposed project? (¿Apoya usted el proyecto propuesto?) __**Yes** (Sí) ✓**No** (No) __**Undecided** (No he decidido)

COMMENTS (COMENTARIOS): this will be to close to our building, risk will be added to our concern safety issue is the bottom line.

Please make additional comments on the back. (Por favor de hacer sus comentarios adicionales atrás de esta forma.)

This comment form may be turned in tonight, mailed, or emailed by May 30, 2013 to the address below:
(Esta forma de comentario se puede regresar esta noche, por correo postal, o por correo electrónico antes del 30 de mayo de 2013 a:)

Director of Project Development
Texas Department of Transportation – Houston District
P.O. Box 1386
Houston, Texas 77251-1386
Email: hou-piowebmail@txdot.gov

COMMENT FORM
(FORMA DE COMENTARIO)

Public Hearing – US 59 (from Spur 10 to SH 99)
(Audiencia Pública – US 59 (desde Spur 10 hasta SH 99))

CSJ Nos. 0027-12-097, 0027-12-105, 0027-12-106, and 0027-12-114
May 16, 2013
(16 de mayo de 2013)

__**I am an Elected Official** (Soy Funcionario/a) **Position** (Posición):_____

Name and Mailing Address (Optional) (Nombre y Dirección [Opcional]):
Name (Nombre) Craig Taylor
Address (Dirección) P.O. Box 1035 East Bornard, Tx 77480
Email Address (Dirección de Correo Electrónico)_____
Telephone (Teléfono)_____

PLEASE CHECK THE APPROPRIATE ITEMS BELOW: (POR FAVOR COMPREBRE LOS ARTÍCULOS SIGUIENTES QUE SEAN APROPIADOS)

I am primarily interested in the project from the standpoint of a: (Estoy interesado en el proyecto del punto de vista de:)
__**Residential property owner or renter** (Propietario o inquilino residencial)
✓**Business property owner or lessee** (Propietario o inquilino del negocio)
__**Other (Please explain)** (Otro [Por favor de explicar]) I work at Deusoft 30444 SW Freeway, Rosenberg 77471

Per Texas Transportation Code, §201.811(a)(5): check each of the following boxes that apply to you: (Por Código de Transportación de Tejas, §201.811(a)(5): apunte todo que aplique:)
__I am employed by TxDOT (Soy empleado de TxDOT)
__I do business with TxDOT (Tengo oficio con TxDOT)
__I could benefit monetarily from the project or other item about which I am commenting (Puedo beneficar monetariamente por hecho de este proyecto u otro asunto de cual estoy comentando)

How did you learn about this hearing? (¿Como se entero usted de esta audiencia?)
✓**Newspaper** (Periódico) __**Notice in the Mail** (Aviso por Correo) __**Yard Signs** (Letreros en Jardines)
✓**Other** (Please explain) (Otro [Por favor de explicar]) Company talking about it.

Do you support the proposed project? (¿Apoya usted el proyecto propuesto?) ✓**Yes** (Sí) __**No** (No) __**Undecided** (No he decidido)

COMMENTS (COMENTARIOS): I work at Deusoft, Rosenberg Tx, 30444 Southwest Fwy. my concerns are about noise and safty at our front door. we have had several accidents on this section of Fwy. + the truck have travel 50-100 ft off Fwy. and safty, if driver runs they would be at our front.

Please make additional comments on the back. (Por favor de hacer sus comentarios adicionales atrás de esta forma.)

This comment form may be turned in tonight, mailed, or emailed by May 30, 2013 to the address below:
(Esta forma de comentario se puede regresar esta noche, por correo postal, o por correo electrónico antes del 30 de mayo de 2013 a:)

Director of Project Development
Texas Department of Transportation – Houston District
P.O. Box 1386
Houston, Texas 77251-1386
Email: hou-piowebmail@txdot.gov

COMMENT FORM
(FORMA DE COMENTARIO)

Public Hearing – US 59 (from Spur 10 to SH 99)
(Audiencia Pública – US 59 (desde Spur 10 hasta SH 99))

CSJ Nos. 0027-12-097, 0027-12-105, 0027-12-106, and 0027-12-114
May 16, 2013
(16 de mayo de 2013)

__**I am an Elected Official** (Soy Funcionario/a) **Position** (Posición):_____

Name and Mailing Address (Optional) (Nombre y Dirección [Opcional]):
Name (Nombre) Benandre McZcal
Address (Dirección) ~~30444~~ 2010 Thompson Rd. #27 work at 30444 SW. Freeway
Email Address (Dirección de Correo Electrónico)_____
Telephone (Teléfono)_____

PLEASE CHECK THE APPROPRIATE ITEMS BELOW: (POR FAVOR COMPREBRE LOS ARTÍCULOS SIGUIENTES QUE SEAN APROPIADOS)

I am primarily interested in the project from the standpoint of a: (Estoy interesado en el proyecto del punto de vista de:)
__**Residential property owner or renter** (Propietario o inquilino residencial) __**Business property owner or lessee** (Propietario o inquilino del negocio)
✓**Other (Please explain)** (Otro [Por favor de explicar]) Work at OcuSoft 30444 SW Freeway Rosenberg 77471

Per Texas Transportation Code, §201.811(a)(5): check each of the following boxes that apply to you: (Por Código de Transportación de Tejas, §201.811(a)(5): apunte todo que aplique:)
__I am employed by TxDOT (Soy empleado de TxDOT)
__I do business with TxDOT (Tengo oficio con TxDOT)
__I could benefit monetarily from the project or other item about which I am commenting (Puedo beneficar monetariamente por hecho de este proyecto u otro asunto de cual estoy comentando)

How did you learn about this hearing? (¿Como se entero usted de esta audiencia?)
✓**Newspaper** (Periódico) __**Notice in the Mail** (Aviso por Correo) __**Yard Signs** (Letreros en Jardines)
✓**Other** (Please explain) (Otro [Por favor de explicar]) I work at OcuSoft

Do you support the proposed project? (¿Apoya usted el proyecto propuesto?) ___ **Yes** (Sí) X **No** (No) ___**Undecided** (No he decidido)

COMMENTS (COMENTARIOS): The current plan bring roadway to close to the building it ~~wo~~ would be safty ~~harzed~~ harzed noisey for my ~~f~~ job.

Please make additional comments on the back. (Por favor de hacer sus comentarios adicionales atrás de esta forma.)

This comment form may be turned in tonight, mailed, or emailed by May 30, 2013 to the address below:
(Esta forma de comentario se puede regresar esta noche, por correo postal, o por correo electrónico antes del 30 de mayo de 2013 a:)

Director of Project Development
Texas Department of Transportation – Houston District
P.O. Box 1386
Houston, Texas 77251-1386
Email: hou-piowebmail@txdot.gov

COMMENT FORM
(FORMA DE COMENTARIO)

Public Hearing – US 59 (from Spur 10 to SH 99)
(Audiencia Pública – US 59 (desde Spur 10 hasta SH 99))

CSJ Nos. 0027-12-097, 0027-12-105, 0027-12-106, and 0027-12-114
May 16, 2013
(16 de mayo de 2013)

__**I am an Elected Official** (Soy Funcionario/a) **Position** (Posición):_____

Name and Mailing Address (Optional) (Nombre y Dirección [Opcional]): SYLVIA DAVILA
Name (Nombre) 1706 LEAMAN ST. Rosenberg Tx. 77471
Address (Dirección) 30444 S.W. Freeway 77471
Email Address (Dirección de Correo Electrónico) rs.davila@yahoo.com
Telephone (Teléfono) 281.658.9994

PLEASE CHECK THE APPROPRIATE ITEMS BELOW: (POR FAVOR COMPREBRE LOS ARTÍCULOS SIGUIENTES QUE SEAN APROPIADOS)

I am primarily interested in the project from the standpoint of a: (Estoy interesado en el proyecto del punto de vista de:)
__**Residential property owner or renter** (Propietario o inquilino residencial) __**Business property owner or lessee** (Propietario o inquilino del negocio)
✓**Other (Please explain)** (Otro [Por favor de explicar]) I work at Ocusoft 30444 SW Freeway, Rosenberg 77471

Per Texas Transportation Code, §201.811(a)(5): check each of the following boxes that apply to you: (Por Código de Transportación de Tejas, §201.811(a)(5): apunte todo que aplique:)
__I am employed by TxDOT (Soy empleado de TxDOT)
__I do business with TxDOT (Tengo oficio con TxDOT)
__I could benefit monetarily from the project or other item about which I am commenting (Puedo beneficar monetariamente por hecho de este proyecto u otro asunto de cual estoy comentando)

How did you learn about this hearing? (¿Como se entero usted de esta audiencia?)
✓**Newspaper** (Periódico) __**Notice in the Mail** (Aviso por Correo) __**Yard Signs** (Letreros en Jardines)
__**Other** (Please explain) (Otro [Por favor de explicar]) _____

Do you support the proposed project? (¿Apoya usted el proyecto propuesto?) ___ **Yes** (Sí) ✓ **No** (No) ___**Undecided** (No he decidido)

COMMENTS (COMENTARIOS): Exit will be Nice, Only in different location Not As It's planned Now.

Please make additional comments on the back. (Por favor de hacer sus comentarios adicionales atrás de esta forma.)

This comment form may be turned in tonight, mailed, or emailed by May 30, 2013 to the address below:
(Esta forma de comentario se puede regresar esta noche, por correo postal, o por correo electrónico antes del 30 de mayo de 2013 a:)

Director of Project Development
Texas Department of Transportation – Houston District
P.O. Box 1386
Houston, Texas 77251-1386
Email: hou-piowebmail@txdot.gov

COMMENT FORM
(FORMA DE COMENTARIO)

Public Hearing – US 59 (from Spur 10 to SH 99)
(Audiencia Pública – US 59 (desde Spur 10 hasta SH 99))

CSJ Nos. 0027-12-097, 0027-12-105, 0027-12-106, and 0027-12-114
May 16, 2013
(16 de mayo de 2013)

__**I am an Elected Official** (Soy Funcionario/a) **Position** (Posición):_____

Name and Mailing Address (Optional) (Nombre y Dirección [Opcional]):
Name (Nombre) Diana Resendiz
Address (Dirección) 6209 Homestead Rd #3 Rosenberg TX 77471 / 3
work **Email Address** (Dirección de Correo Electrónico) 30444 SW Freeway TX 77471
Telephone (Teléfono) 281.770.8446

PLEASE CHECK THE APPROPRIATE ITEMS BELOW: (POR FAVOR COMPREBRE LOS ARTÍCULOS SIGUIENTES QUE SEAN APROPIADOS)

I am primarily interested in the project from the standpoint of a: (Estoy interesado en el proyecto del punto de vista de:)
__**Residential property owner or renter** (Propietario o inquilino residencial) __**Business property owner or lessee** (Propietario o inquilino del negocio)
✓ **Other (Please explain)** (Otro [Por favor de explicar]) I work @ Ocusoft 30444 SW Freeway Rosenberg TX 77471

Per Texas Transportation Code, §201.811(a)(5): check each of the following boxes that apply to you: (Por Código de Transportación de Tejas, §201.811(a)(5): apunte todo que aplique:)
__I am employed by TxDOT (Soy empleado de TxDOT)
__I do business with TxDOT (Tengo oficio con TxDOT)
__I could benefit monetarily from the project or other item about which I am commenting (Puedo beneficar monetariamente por hecho de este proyecto u otro asunto de cual estoy comentando)

How did you learn about this hearing? (¿Como se entero usted de esta audiencia?)
✓ **Newspaper** (Periódico) __**Notice in the Mail** (Aviso por Correo) __**Yard Signs** (Letreros en Jardines)
✓ **Other** (Please explain) (Otro [Por favor de explicar]) Work @ Ocusoft.

Do you support the proposed project? (¿Apoya usted el proyecto propuesto?) ___ **Yes** (Sí) ✓ **No** (No) ___**Undecided** (No he decidido)

COMMENTS (COMENTARIOS): We appreciate the thought of the freeway by our company but do not like the way you all have it planned now. Exit will be nice but it in different area.

Please make additional comments on the back. (Por favor de hacer sus comentarios adicionales atrás de esta forma.)

This comment form may be turned in tonight, mailed, or emailed by May 30, 2013 to the address below:
(Esta forma de comentario se puede regresar esta noche, por correo postal, o por correo electrónico antes del 30 de mayo de 2013 a:)

Director of Project Development
Texas Department of Transportation – Houston District
P.O. Box 1386
Houston, Texas 77251-1386
Email: hou-piowebmail@txdot.gov

COMMENT FORM
(FORMA DE COMENTARIO)

Public Hearing – US 59 (from Spur 10 to SH 99)
(Audiencia Pública – US 59 (desde Spur 10 hasta SH 99))

CSJ Nos. 0027-12-097, 0027-12-105, 0027-12-106, and 0027-12-114
May 16, 2013
(16 de mayo de 2013)

__**I am an Elected Official** (Soy Funcionario/a) **Position** (Posición):_____

Name and Mailing Address (Optional) (Nombre y Dirección [Opcional]):
Name (Nombre) Mary Lopez
Address (Dirección) 12330 Millbanks Dr. Houston Tex. / 30444 SW Freeway · Rosenberg, Tx 77471
Email Address (Dirección de Correo Electrónico)_____
Telephone (Teléfono)_____

PLEASE CHECK THE APPROPRIATE ITEMS BELOW: (POR FAVOR COMPREBRE LOS ARTÍCULOS SIGUIENTES QUE SEAN APROPIADOS)

I am primarily interested in the project from the standpoint of a: (Estoy interesado en el proyecto del punto de vista de:)
__**Residential property owner or renter** (Propietario o inquilino residencial) __**Business property owner or lessee** (Propietario o inquilino del negocio)
✓**Other (Please explain)** (Otro [Por favor de explicar]) Work at OCuSOFT

Per Texas Transportation Code, §201.811(a)(5): check each of the following boxes that apply to you: (Por Código de Transportación de Tejas, §201.811(a)(5): apunte todo que aplique:)
__I am employed by TxDOT (Soy empleado de TxDOT)
__I do business with TxDOT (Tengo oficio con TxDOT)
__I could benefit monetarily from the project or other item about which I am commenting (Puedo beneficar monetariamente por hecho de este proyecto u otro asunto de cual estoy comentando)

How did you learn about this hearing? (¿Como se entero usted de esta audiencia?)
✓**Newspaper** (Periódico) __**Notice in the Mail** (Aviso por Correo) __**Yard Signs** (Letreros en Jardines)
__**Other** (Please explain) (Otro [Por favor de explicar])_____

Do you support the proposed project? (¿Apoya usted el proyecto propuesto?) ___ **Yes** (Sí) ✓ **No** (No) ___**Undecided** (No he decidido)

COMMENTS (COMENTARIOS):

Issues I have is it will be to loud, Safety problems, Drug bust. to close to the Company.

Please make additional comments on the back. (Por favor de hacer sus comentarios adicionales atrás de esta forma.)

This comment form may be turned in tonight, mailed, or emailed by May 30, 2013 to the address below:
(Esta forma de comentario se puede regresar esta noche, por correo postal, o por correo electrónico antes del 30 de mayo de 2013 a:)

Director of Project Development
Texas Department of Transportation – Houston District
P.O. Box 1386
Houston, Texas 77251-1386
Email: hou-piowebmail@txdot.gov

COMMENT FORM
(FORMA DE COMENTARIO)

Public Hearing – US 59 (from Spur 10 to SH 99)
(Audiencia Pública – US 59 (desde Spur 10 hasta SH 99))

CSJ Nos. 0027-12-097, 0027-12-105, 0027-12-106, and 0027-12-114
May 16, 2013
(16 de mayo de 2013)

__**I am an Elected Official** (Soy Funcionario/a) **Position** (Posición):_____

Name and Mailing Address (Optional) (Nombre y Dirección [Opcional]):
Name (Nombre) Oresia Taylor
Address (Dirección) 7800 W. Airport # 719 Houston, TX 77071 / 30444 S.W. Fwy Rosenberg, TX. 77471
Email Address (Dirección de Correo Electrónico) —
Telephone (Teléfono) —

PLEASE CHECK THE APPROPRIATE ITEMS BELOW: (POR FAVOR COMPREBRE LOS ARTÍCULOS SIGUIENTES QUE SEAN APROPIADOS)

I am primarily interested in the project from the standpoint of a: (Estoy interesado en el proyecto del punto de vista de:)
__**Residential property owner or renter** (Propietario o inquilino residencial) __**Business property owner or lessee** (Propietario o inquilino del negocio)
✓**Other (Please explain)** (Otro [Por favor de explicar]) I work @ OcuSoft

Per Texas Transportation Code, §201.811(a)(5): check each of the following boxes that apply to you: (Por Código de Transportación de Tejas, §201.811(a)(5): apunte todo que aplique:)
__I am employed by TxDOT (Soy empleado de TxDOT)
__I do business with TxDOT (Tengo oficio con TxDOT)
__I could benefit monetarily from the project or other item about which I am commenting (Puedo beneficar monetariamente por hecho de este proyecto u otro asunto de cual estoy comentando)

How did you learn about this hearing? (¿Como se entero usted de esta audiencia?)
✓**Newspaper** (Periódico) __**Notice in the Mail** (Aviso por Correo) __**Yard Signs** (Letreros en Jardines)
✓**Other** (Please explain) (Otro [Por favor de explicar]) Work @ OcuSoft

Do you support the proposed project? (¿Apoya usted el proyecto propuesto?) ___ **Yes** (Sí) ✓**No** (No) ___**Undecided** (No he decidido)

COMMENTS (COMENTARIOS): I, live in houston and I commute to 30444 SW. Fwy in Rosenberg, TX and very unhappy about the time it would take to completed the construction. Also, I think it will be to noise for this call center & at it just not safe. So please reconsider your plan for this project @ this time. There are so many 18-wheeler trucks that pass on this highway and don't you think? It's dangerous enough. Thanks -Oresia Taylor

Please make additional comments on the back. (Por favor de hacer sus comentarios adicionales atrás de esta forma.)

This comment form may be turned in tonight, mailed, or emailed by May 30, 2013 to the address below:
(Esta forma de comentario se puede regresar esta noche, por correo postal, o por correo electrónico antes del 30 de mayo de 2013 a:)

Director of Project Development
Texas Department of Transportation – Houston District
P.O. Box 1386
Houston, Texas 77251-1386
Email: hou-piowebmail@txdot.gov

COMMENT FORM
(FORMA DE COMENTARIO)

Public Hearing – US 59 (from Spur 10 to SH 99)
(Audiencia Pública – US 59 (desde Spur 10 hasta SH 99))

CSJ Nos. 0027-12-097, 0027-12-105, 0027-12-106, and 0027-12-114
May 16, 2013
(16 de mayo de 2013)

__**I am an Elected Official** (Soy Funcionario/a) **Position** (Posición):_____

Name and Mailing Address (Optional) (Nombre y Dirección [Opcional]):
Name (Nombre) DARLENE HATFIELD
Address (Dirección) 30444 SOUTHWEST FREEWAY, ROSENBERG, TX 77471 (HOME: 1001 COUNTRY CLUB DR. RICHMOND TX 77469)
Email Address (Dirección de Correo Electrónico) DHATFIELD@OCUSOFT.COM
Telephone (Teléfono) 281-239-9824

PLEASE CHECK THE APPROPRIATE ITEMS BELOW: (POR FAVOR COMPREBRE LOS ARTÍCULOS SIGUIENTES QUE SEAN APROPIADOS)

I am primarily interested in the project from the standpoint of a: (Estoy interesado en el proyecto del punto de vista de:)
__**Residential property owner or renter** (Propietario o inquilino residencial) __**Business property owner or lessee** (Propietario o inquilino del negocio)
X **Other (Please explain)** (Otro [Por favor de explicar]) EMPLOYEE OF OCUSOFT

Per Texas Transportation Code, §201.811(a)(5): check each of the following boxes that apply to you: (Por Código de Transportación de Tejas, §201.811(a)(5): apunte todo que aplique:)
__I am employed by TxDOT (Soy empleado de TxDOT)
__I do business with TxDOT (Tengo oficio con TxDOT)
__I could benefit monetarily from the project or other item about which I am commenting (Puedo beneficar monetariamente por hecho de este proyecto u otro asunto de cual estoy comentando)

How did you learn about this hearing? (¿Como se entero usted de esta audiencia?)

__**Newspaper** (Periódico) __**Notice in the Mail** (Aviso por Correo) __**Yard Signs** (Letreros en Jardines)
X **Other** (Please explain) (Otro [Por favor de explicar]) FROM EMPLOYER

Do you support the proposed project? (¿Apoya usted el proyecto propuesto?) ___ **Yes** (Sí) X **No** (No) ___**Undecided** (No he decidido)

COMMENTS (COMENTARIOS): SAFETY, NOISE, DPS/LAW ENFORCEMENT STOPPING PEOPLE, HEAVY INCREASE IN TRAFFIC DUE TO EXIT, IF MOVE LANES TO THE SOUTH BY 100 FEET WOULD INCORPORATE FARM LAND ALREADY FOR SALE & WOULD ELIMINATE "DEAD MAN'S CURVE" AT 529 & SOUTHWEST FREEWAY, TURNING LANES AT INTERSECTION ON FRONTAGE ROAD IS NOT SUPPORTED BY TRAFFIC IN THE AREA

Please make additional comments on the back. (Por favor de hacer sus comentarios adicionales atrás de esta forma.)

This comment form may be turned in tonight, mailed, or emailed by May 30, 2013 to the address below:
(Esta forma de comentario se puede regresar esta noche, por correo postal, o por correo electrónico antes del 30 de mayo de 2013 a:)

Director of Project Development
Texas Department of Transportation – Houston District
P.O. Box 1386
Houston, Texas 77251-1386
Email: hou-piowebmail@txdot.gov

COMMENT FORM
(FORMA DE COMENTARIO)

Public Hearing – US 59 (from Spur 10 to SH 99)
(Audiencia Pública – US 59 (desde Spur 10 hasta SH 99))

CSJ Nos. 0027-12-097, 0027-12-105, 0027-12-106, and 0027-12-114
May 16, 2013
(16 de mayo de 2013)

__**I am an Elected Official** (Soy Funcionario/a) **Position** (Posición):_____

Name and Mailing Address (Optional) (Nombre y Dirección [Opcional]):
Name (Nombre) Azanette Hernandez
Address (Dirección) 2021 Avenue F Rosenberg, TX 77471 → work at 30444 Southwest Fwy Rosenberg TX 77471
Email Address (Dirección de Correo Electrónico) abn3082@gmail.com
Telephone (Teléfono) 281-732-8882

PLEASE CHECK THE APPROPRIATE ITEMS BELOW: (POR FAVOR COMPREBRE LOS ARTÍCULOS SIGUIENTES QUE SEAN APROPIADOS)

I am primarily interested in the project from the standpoint of a: (Estoy interesado en el proyecto del punto de vista de:)
__**Residential property owner or renter** (Propietario o inquilino residencial) __**Business property owner or lessee** (Propietario o inquilino del negocio)
✓ **Other (Please explain)** (Otro [Por favor de explicar]) employed at Ocusoft 30444 Sw Fwy Rosenberg TX 77471

Per Texas Transportation Code, §201.811(a)(5): check each of the following boxes that apply to you: (Por Código de Transportación de Tejas, §201.811(a)(5): apunte todo que aplique:)
__I am employed by TxDOT (Soy empleado de TxDOT)
__I do business with TxDOT (Tengo oficio con TxDOT)
__I could benefit monetarily from the project or other item about which I am commenting (Puedo beneficar monetariamente por hecho de este proyecto u otro asunto de cual estoy comentando)

How did you learn about this hearing? (¿Como se entero usted de esta audiencia?)
✓ **Newspaper** (Periódico) __**Notice in the Mail** (Aviso por Correo) __**Yard Signs** (Letreros en Jardines)
__**Other** (Please explain) (Otro [Por favor de explicar]) _____

Do you support the proposed project? (¿Apoya usted el proyecto propuesto?) ___ **Yes** (Sí) ✓ **No** (No) ___**Undecided** (No he decidido)

COMMENTS (COMENTARIOS): reasons why I am against the expansion of future Fwy is because it would create a horrible place for accidents which would put all of Ocusoft's safety at risk. The expansion should be south 100% where the land is currently up for sale and there is No businesses or buildings in that area. This would take out dead man's curve.
DPS is currently stopping traffic in front of our building

Please make additional comments on the back. (Por favor de hacer sus comentarios adicionales atrás de esta forma.)

This comment form may be turned in tonight, mailed, or emailed by May 30, 2013 to the address below:
(Esta forma de comentario se puede regresar esta noche, por correo postal, o por correo electrónico antes del 30 de mayo de 2013 a:)

Director of Project Development
Texas Department of Transportation – Houston District
P.O. Box 1386
Houston, Texas 77251-1386
Email: hou-piowebmail@txdot.gov

COMMENT FORM
(FORMA DE COMENTARIO)

Public Hearing – US 59 (from Spur 10 to SH 99)
(Audiencia Pública – US 59 (desde Spur 10 hasta SH 99))

CSJ Nos. 0027-12-097, 0027-12-105, 0027-12-106, and 0027-12-114
May 16, 2013
(16 de mayo de 2013)

__**I am an Elected Official** (Soy Funcionario/a) **Position** (Posición):_____

Name and Mailing Address (Optional) (Nombre y Dirección [Opcional]):
Name (Nombre) K. WHITBEY
Address (Dirección) * P O BOX 1002 NEEDVILLE TX 77461
Email Address (Dirección de Correo Electrónico) kwhitbey@ocusoft.com
Telephone (Teléfono) 979 - 793 - 6447
(WORK) * 30444 SO.WEST FRWY * ROSENBERG, TX 77471

PLEASE CHECK THE APPROPRIATE ITEMS BELOW: (POR FAVOR COMPREBRE LOS ARTÍCULOS SIGUIENTES QUE SEAN APROPIADOS)

I am primarily interested in the project from the standpoint of a: (Estoy interesado en el proyecto del punto de vista de:)
__**Residential property owner or renter** (Propietario o inquilino residencial) __**Business property owner or lessee** (Propietario o inquilino del negocio) Ocusoft
V **Other (Please explain)** (Otro [Por favor de explicar]) employee of local business

Per Texas Transportation Code, §201.811(a)(5): check each of the following boxes that apply to you: (Por Código de Transportación de Tejas, §201.811(a)(5): apunte todo que aplique:)
__I am employed by TxDOT (Soy empleado de TxDOT)
__I do business with TxDOT (Tengo oficio con TxDOT)
__I could benefit monetarily from the project or other item about which I am commenting (Puedo beneficar monetariamente por hecho de este proyecto u otro asunto de cual estoy comentando)

How did you learn about this hearing? (¿Como se entero usted de esta audiencia?)
V **Newspaper** (Periódico) __**Notice in the Mail** (Aviso por Correo) __**Yard Signs** (Letreros en Jardines)
V **Other** (Please explain) (Otro [Por favor de explicar]) _____

Do you support the proposed project? (¿Apoya usted el proyecto propuesto?) __ **Yes** (Sí) V **No** (No) V **Undecided** (No he decidido) AS PROPOSED

COMMENTS (COMENTARIOS): I prefer that expansion be made further south (on long) KOESCHE RD. There is only cotton fields there now. No business or personal resident would be affected. The feeder roads proposed should be started further South, like at Cottonwood, could straighten out the deadly curve ~~at~~ there. The noise increase would not be a positive change.

Please make additional comments on the back. (Por favor de hacer sus comentarios adicionales atrás de esta forma.)

This comment form may be turned in tonight, mailed, or emailed by May 30, 2013 to the address below:
(Esta forma de comentario se puede regresar esta noche, por correo postal, o por correo electrónico antes del 30 de mayo de 2013 a:)

Director of Project Development
Texas Department of Transportation – Houston District
P.O. Box 1386
Houston, Texas 77251-1386
Email: hou-piowebmail@txdot.gov

COMMENT FORM
(FORMA DE COMENTARIO)

Public Hearing – US 59 (from Spur 10 to SH 99)
(Audiencia Pública – US 59 (desde Spur 10 hasta SH 99))

CSJ Nos. 0027-12-097, 0027-12-105, 0027-12-106, and 0027-12-114
May 16, 2013
(16 de mayo de 2013)

__**I am an Elected Official** (Soy Funcionario/a) **Position** (Posición):_____

Name and Mailing Address (Optional) (Nombre y Dirección [Opcional]):
Name (Nombre) Nathan Baker
Address (Dirección) ~~5703 Sunset Trail Dr. Needville Tx 77461~~ / 30444 Southwest Frwy (work) Rosenberg TX 77471
Email Address (Dirección de Correo Electrónico)_____
Telephone (Teléfono) 832-390-0813

PLEASE CHECK THE APPROPRIATE ITEMS BELOW: (POR FAVOR COMPREBRE LOS ARTÍCULOS SIGUIENTES QUE SEAN APROPIADOS)

I am primarily interested in the project from the standpoint of a: (Estoy interesado en el proyecto del punto de vista de:)
__**Residential property owner or renter** (Propietario o inquilino residencial) __**Business property owner or lessee** (Propietario o inquilino del negocio)

__**Other (Please explain)** (Otro [Por favor de explicar]) _____

Per Texas Transportation Code, §201.811(a)(5): check each of the following boxes that apply to you: (Por Código de Transportación de Tejas, §201.811(a)(5): apunte todo que aplique:)
__I am employed by TxDOT (Soy empleado de TxDOT)
__I do business with TxDOT (Tengo oficio con TxDOT)
__I could benefit monetarily from the project or other item about which I am commenting (Puedo beneficar monetariamente por hecho de este proyecto u otro asunto de cual estoy comentando)

How did you learn about this hearing? (¿Como se entero usted de esta audiencia?)

__**Newspaper** (Periódico) __**Notice in the Mail** (Aviso por Correo) __**Yard Signs** (Letreros en Jardines)
✓**Other** (Please explain) (Otro [Por favor de explicar]) Ocusoft (work)

Do you support the proposed project? (¿Apoya usted el proyecto propuesto?) ___ **Yes** (Sí) ✓ **No** (No) ___**Undecided** (No he decidido)

COMMENTS (COMENTARIOS): It is a major safety issue for everyone at Ocusoft. The interstate will be too close to where I work and big trucks could come off the road and run into our building. The noise from the traffic will be too load and could effect the way I work. There are cotton feilds for sale that can be purchased so that the interstate can run through.

Please make additional comments on the back. (Por favor de hacer sus comentarios adicionales atrás de esta forma.)

This comment form may be turned in tonight, mailed, or emailed by May 30, 2013 to the address below:
(Esta forma de comentario se puede regresar esta noche, por correo postal, o por correo electrónico antes del 30 de mayo de 2013 a:)

Director of Project Development
Texas Department of Transportation – Houston District
P.O. Box 1386
Houston, Texas 77251-1386
Email: hou-piowebmail@txdot.gov

COMMENT FORM
(FORMA DE COMENTARIO)

Public Hearing – US 59 (from Spur 10 to SH 99)
(Audiencia Pública – US 59 (desde Spur 10 hasta SH 99))

CSJ Nos. 0027-12-097, 0027-12-105, 0027-12-106, and 0027-12-114
May 16, 2013
(16 de mayo de 2013)

__**I am an Elected Official** (Soy Funcionario/a) **Position** (Posición):_____

Name and Mailing Address (Optional) (Nombre y Dirección [Opcional]):
Name (Nombre) Chris Shipley 30444 SW Freeway Rosenberg TX 77471 Ocusoft
Address (Dirección) 745 summer park dr Stafford Tx 77477
Email Address (Dirección de Correo Electrónico) cshipley@ocusoft.com
Telephone (Teléfono) 281 202 6105

PLEASE CHECK THE APPROPRIATE ITEMS BELOW: (POR FAVOR COMPREBRE LOS ARTÍCULOS SIGUIENTES QUE SEAN APROPIADOS)

I am primarily interested in the project from the standpoint of a: (Estoy interesado en el proyecto del punto de vista de:)
__**Residential property owner or renter** (Propietario o inquilino residencial) __**Business property owner or lessee** (Propietario o inquilino del negocio)

x **Other (Please explain)** (Otro [Por favor de explicar]) I work @ ocusoft

Per Texas Transportation Code, §201.811(a)(5): check each of the following boxes that apply to you: (Por Código de Transportación de Tejas, §201.811(a)(5): apunte todo que aplique:)
__I am employed by TxDOT (Soy empleado de TxDOT)
__I do business with TxDOT (Tengo oficio con TxDOT)
__I could benefit monetarily from the project or other item about which I am commenting (Puedo beneficar monetariamente por hecho de este proyecto u otro asunto de cual estoy comentando)

How did you learn about this hearing? (¿Como se entero usted de esta audiencia?)

x **Newspaper** (Periódico) __**Notice in the Mail** (Aviso por Correo) __**Yard Signs** (Letreros en Jardines)
x **Other** (Please explain) (Otro [Por favor de explicar]) heard about hearing from work

Do you support the proposed project? (¿Apoya usted el proyecto propuesto?) ___ **Yes** (Sí) x **No** (No) (as proposed) ___**Undecided** (No he decidido)

COMMENTS (COMENTARIOS): The safety of the company. Increased traffic causes increase in traffic stops directly infront of our building. Unimproved farmland for sale across the highway would straighten out "dead mans curve" instead of using improved land and taking from local business.
Not enough traffic to warrant 5 frontage lanes. Truck traffic directly, and in such proximity to building, would cause for work distractions and interruptions.

Please make additional comments on the back. (Por favor de hacer sus comentarios adicionales atrás de esta forma.)

This comment form may be turned in tonight, mailed, or emailed by May 30, 2013 to the address below:
(Esta forma de comentario se puede regresar esta noche, por correo postal, o por correo electrónico antes del 30 de mayo de 2013 a:)

Director of Project Development
Texas Department of Transportation – Houston District
P.O. Box 1386
Houston, Texas 77251-1386
Email: hou-piowebmail@txdot.gov

COMMENT FORM
(FORMA DE COMENTARIO)

Public Hearing – US 59 (from Spur 10 to SH 99)
(Audiencia Pública – US 59 (desde Spur 10 hasta SH 99))

CSJ Nos. 0027-12-097, 0027-12-105, 0027-12-106, and 0027-12-114
May 16, 2013
(16 de mayo de 2013)

__**I am an Elected Official** (Soy Funcionario/a) **Position** (Posición):_____

Name and Mailing Address (Optional) (Nombre y Dirección [Opcional]):
Name (Nombre) Norma Giron
Address (Dirección) 4122 Fielder Green Lane Richmond Tx work at 3044 Southwest Way.
Email Address (Dirección de Correo Electrónico) norma-giron@yahoo.com
Telephone (Teléfono) 832 3536306

PLEASE CHECK THE APPROPRIATE ITEMS BELOW: (POR FAVOR COMPREBRE LOS ARTÍCULOS SIGUIENTES QUE SEAN APROPIADOS)

I am primarily interested in the project from the standpoint of a: (Estoy interesado en el proyecto del punto de vista de:)
__**Residential property owner or renter** (Propietario o inquilino residencial) __**Business property owner or lessee** (Propietario o inquilino del negocio)
__**Other (Please explain)** (Otro [Por favor de explicar]) Causoft

Per Texas Transportation Code, §201.811(a)(5): check each of the following boxes that apply to you: (Por Código de Transportación de Tejas, §201.811(a)(5): apunte todo que aplique:)
__I am employed by TxDOT (Soy empleado de TxDOT)
__I do business with TxDOT (Tengo oficio con TxDOT)
__I could benefit monetarily from the project or other item about which I am commenting (Puedo beneficar monetariamente por hecho de este proyecto u otro asunto de cual estoy comentando)

How did you learn about this hearing? (¿Como se entero usted de esta audiencia?)

__**Newspaper** (Periódico) __**Notice in the Mail** (Aviso por Correo) __**Yard Signs** (Letreros en Jardines)
✓**Other** (Please explain) (Otro [Por favor de explicar]) Word

Do you support the proposed project? (¿Apoya usted el proyecto propuesto?) ___ **Yes** (Sí) ✓**No** (No) ___**Undecided** (No he decidido)

COMMENTS (COMENTARIOS): Safety - Noise DPS Law Enforcement stop traffic but more impotant truck drivers move dead man road. turn lanes at intersection on Frantaige Rd is not supported by all the trafic

Please takes this in consideration that really put us in risk.

Please make additional comments on the back. (Por favor de hacer sus comentarios adicionales atrás de esta forma.)

This comment form may be turned in tonight, mailed, or emailed by May 30, 2013 to the address below:
(Esta forma de comentario se puede regresar esta noche, por correo postal, o por correo electrónico antes del 30 de mayo de 2013 a:)

Director of Project Development
Texas Department of Transportation – Houston District
P.O. Box 1386
Houston, Texas 77251-1386
Email: hou-piowebmail@txdot.gov

COMMENT FORM
(FORMA DE COMENTARIO)

Public Hearing – US 59 (from Spur 10 to SH 99)
(Audiencia Pública – US 59 (desde Spur 10 hasta SH 99))

CSJ Nos. 0027-12-097, 0027-12-105, 0027-12-106, and 0027-12-114
May 16, 2013
(16 de mayo de 2013)

__**I am an Elected Official** (Soy Funcionario/a) **Position** (Posición):_____

Name and Mailing Address (Optional) (Nombre y Dirección [Opcional]):
Name (Nombre) Alma R. Romero
Address (Dirección) 30444 SW Fwy - (work) Rosenberg Tx home - 11555 Hwy 90 A East Bernard
Email Address (Dirección de Correo Electrónico) almar2411@gmail.com
Telephone (Teléfono) 979-297-4787

PLEASE CHECK THE APPROPRIATE ITEMS BELOW: (POR FAVOR COMPREBRE LOS ARTÍCULOS SIGUIENTES QUE SEAN APROPIADOS)

I am primarily interested in the project from the standpoint of a: (Estoy interesado en el proyecto del punto de vista de:)
__**Residential property owner or renter** (Propietario o inquilino residencial) __**Business property owner or lessee** (Propietario o inquilino del negocio)
__**Other (Please explain)** (Otro [Por favor de explicar]) Ocu Soft

Per Texas Transportation Code, §201.811(a)(5): check each of the following boxes that apply to you: (Por Código de Transportación de Tejas, §201.811(a)(5): apunte todo que aplique:)
__I am employed by TxDOT (Soy empleado de TxDOT)
__I do business with TxDOT (Tengo oficio con TxDOT)
__I could benefit monetarily from the project or other item about which I am commenting (Puedo beneficar monetariamente por hecho de este proyecto u otro asunto de cual estoy comentando)

How did you learn about this hearing? (¿Como se entero usted de esta audiencia?)

__**Newspaper** (Periódico) __**Notice in the Mail** (Aviso por Correo) __**Yard Signs** (Letreros en Jardines)
✓**Other** (Please explain) (Otro [Por favor de explicar]) work

Do you support the proposed project? (¿Apoya usted el proyecto propuesto?) ___ **Yes** (Sí) ✓ **No** (No) ___**Undecided** (No he decidido)

COMMENTS (COMENTARIOS): Dps law enforcement stops traffic on freeway constantly, safety, the noise of all traffic but more importantly truck drivers. If we moved it south that dangerous curb can be a little bit more straight. turning lane at intersection on Frontage Rd is not supported by all the traffic.

Please make additional comments on the back. (Por favor de hacer sus comentarios adicionales atrás de esta forma.)

This comment form may be turned in tonight, mailed, or emailed by May 30, 2013 to the address below:
(Esta forma de comentario se puede regresar esta noche, por correo postal, o por correo electrónico antes del 30 de mayo de 2013 a:)

Director of Project Development
Texas Department of Transportation – Houston District
P.O. Box 1386
Houston, Texas 77251-1386
Email: hou-piowebmail@txdot.gov

consideration

COMMENT FORM
(FORMA DE COMENTARIO)

Public Hearing – US 59 (from Spur 10 to SH 99)
(Audiencia Pública – US 59 (desde Spur 10 hasta SH 99))

CSJ Nos. 0027-12-097, 0027-12-105, 0027-12-106, and 0027-12-114
May 16, 2013
(16 de mayo de 2013)

__**I am an Elected Official** (Soy Funcionario/a) **Position** (Posición):_____

Name and Mailing Address (Optional) (Nombre y Dirección [Opcional]):
Name (Nombre) Ruthann Young
Address (Dirección) 30444 SW Fwy Rosenberg TX 77471 (WK) [redacted] 11411 Reinecker Rd Wallis TX (home)
Email Address (Dirección de Correo Electrónico) ryoung@ocusoft.com
Telephone (Teléfono) 281-239-9889

PLEASE CHECK THE APPROPRIATE ITEMS BELOW: (POR FAVOR COMPREBRE LOS ARTÍCULOS SIGUIENTES QUE SEAN APROPIADOS)

I am primarily interested in the project from the standpoint of a: (Estoy interesado en el proyecto del punto de vista de:)
__**Residential property owner or renter** (Propietario o inquilino residencial) __**Business property owner or lessee** (Propietario o inquilino del negocio)
✓**Other (Please explain)** (Otro [Por favor de explicar]) employee of local business @OCUSOFT

Per Texas Transportation Code, §201.811(a)(5): check each of the following boxes that apply to you: (Por Código de Transportación de Tejas, §201.811(a)(5): apunte todo que aplique:)
__I am employed by TxDOT (Soy empleado de TxDOT)
__I do business with TxDOT (Tengo oficio con TxDOT)
__I could benefit monetarily from the project or other item about which I am commenting (Puedo beneficar monetariamente por hecho de este proyecto u otro asunto de cual estoy comentando)

How did you learn about this hearing? (¿Como se entero usted de esta audiencia?)
✓**Newspaper** (Periódico) __**Notice in the Mail** (Aviso por Correo) __**Yard Signs** (Letreros en Jardines)
__**Other** (Please explain) (Otro [Por favor de explicar]) _____

Do you support the proposed project? (¿Apoya usted el proyecto propuesto?) ___ **Yes** (Sí) ✓ **No** (No) ___**Undecided** (No he decidido)

COMMENTS (COMENTARIOS): law enforcement stops people regularly. If it was moved south it would take out dead mans curve. Turning lanes are not supported at the intersection on the frontage road.
NOT safe!!
& excessive noise!

Please make additional comments on the back. (Por favor de hacer sus comentarios adicionales atrás de esta forma.)

This comment form may be turned in tonight, mailed, or emailed by May 30, 2013 to the address below:
(Esta forma de comentario se puede regresar esta noche, por correo postal, o por correo electrónico antes del 30 de mayo de 2013 a:)

Director of Project Development
Texas Department of Transportation – Houston District
P.O. Box 1386
Houston, Texas 77251-1386
Email: hou-piowebmail@txdot.gov

COMMENT FORM
(FORMA DE COMENTARIO)

Public Hearing – US 59 (from Spur 10 to SH 99)
(Audiencia Pública – US 59 (desde Spur 10 hasta SH 99))

CSJ Nos. 0027-12-097, 0027-12-105, 0027-12-106, and 0027-12-114
May 16, 2013
(16 de mayo de 2013)

__**I am an Elected Official** (Soy Funcionario/a) **Position** (Posición):_____

Name and Mailing Address (Optional) (Nombre y Dirección [Opcional]):
Name (Nombre) Michelle Thomas
Address (Dirección) 30444 SW Freeway, Rosenberg TX 77471
Email Address (Dirección de Correo Electrónico) mthomas@OCuSOFT.com
Telephone (Teléfono) 281-239-9822

PLEASE CHECK THE APPROPRIATE ITEMS BELOW: (POR FAVOR COMPREBRE LOS ARTÍCULOS SIGUIENTES QUE SEAN APROPIADOS)

I am primarily interested in the project from the standpoint of a: (Estoy interesado en el proyecto del punto de vista de:)
__**Residential property owner or renter** (Propietario o inquilino residencial) __**Business property owner or lessee** (Propietario o inquilino del negocio)
X **Other (Please explain)** (Otro [Por favor de explicar]) Employee of local business (OCuSOFT)

Per Texas Transportation Code, §201.811(a)(5): check each of the following boxes that apply to you: (Por Código de Transportación de Tejas, §201.811(a)(5): apunte todo que aplique:)
__I am employed by TxDOT (Soy empleado de TxDOT)
__I do business with TxDOT (Tengo oficio con TxDOT)
__I could benefit monetarily from the project or other item about which I am commenting (Puedo beneficar monetariamente por hecho de este proyecto u otro asunto de cual estoy comentando)

How did you learn about this hearing? (¿Como se entero usted de esta audiencia?)

__**Newspaper** (Periódico) __**Notice in the Mail** (Aviso por Correo) __**Yard Signs** (Letreros en Jardines)
X **Other** (Please explain) (Otro [Por favor de explicar]) News paper

Do you support the proposed project? (¿Apoya usted el proyecto propuesto?) ___ **Yes** (Sí) X **No** (No) ___**Undecided** (No he decidido)

COMMENTS (COMENTARIOS): (1) Safety, (2) Noise, (3) Lawenforcement stops people in front of our business everyday. (4) If roads are moved please move 100 ft. on Cottonfield Side. (5) Take out Deadmans Curve. (6) Turning lanes @ intersection on frontage Rd. is not supported by traffic in the area. We are not allowed to put up fence in front.

Please make additional comments on the back. (Por favor de hacer sus comentarios adicionales atrás de esta forma.)

This comment form may be turned in tonight, mailed, or emailed by May 30, 2013 to the address below:
(Esta forma de comentario se puede regresar esta noche, por correo postal, o por correo electrónico antes del 30 de mayo de 2013 a:)

Director of Project Development
Texas Department of Transportation – Houston District
P.O. Box 1386
Houston, Texas 77251-1386
Email: hou-piowebmail@txdot.gov

COMMENT FORM
(FORMA DE COMENTARIO)

Public Hearing – US 59 (from Spur 10 to SH 99)
(Audiencia Pública – US 59 (desde Spur 10 hasta SH 99))

CSJ Nos. 0027-12-097, 0027-12-105, 0027-12-106, and 0027-12-114
May 16, 2013
(16 de mayo de 2013)

__**I am an Elected Official** (Soy Funcionario/a) **Position** (Posición):_____

Name and Mailing Address (Optional) (Nombre y Dirección [Opcional]):
Name (Nombre) Christine Benkenstein (Employee @ 30444 Southwest Fwy.)
Address (Dirección) 803 Newell Dr. Richmond TX 77469
Email Address (Dirección de Correo Electrónico) CLB247@gmail.com
Telephone (Teléfono) 281 827 8310

PLEASE CHECK THE APPROPRIATE ITEMS BELOW: (POR FAVOR COMPREBRE LOS ARTÍCULOS SIGUIENTES QUE SEAN APROPIADOS)

I am primarily interested in the project from the standpoint of a: (Estoy interesado en el proyecto del punto de vista de:)
✓ **Residential property owner or renter** (Propietario o inquilino residencial) __**Business property owner or lessee** (Propietario o inquilino del negocio)

__**Other (Please explain)** (Otro [Por favor de explicar]) OcuSoft

Per Texas Transportation Code, §201.811(a)(5): check each of the following boxes that apply to you: (Por Código de Transportación de Tejas, §201.811(a)(5): apunte todo que aplique:)
__I am employed by TxDOT (Soy empleado de TxDOT)
__I do business with TxDOT (Tengo oficio con TxDOT)
__I could benefit monetarily from the project or other item about which I am commenting (Puedo beneficar monetariamente por hecho de este proyecto u otro asunto de cual estoy comentando)

How did you learn about this hearing? (¿Como se entero usted de esta audiencia?)

__**Newspaper** (Periódico) __**Notice in the Mail** (Aviso por Correo) __**Yard Signs** (Letreros en Jardines)
✓ **Other** (Please explain) (Otro [Por favor de explicar]) TxDOT Meeting / Employer (OCUSOFT)

Do you support the proposed project? (¿Apoya usted el proyecto propuesto?) ___ **Yes** (Sí) X **No** (No) ___**Undecided** (No he decidido)

COMMENTS (COMENTARIOS): Safety Concerns for Businesses. There will be less retail shops and ~~eating~~ restaurants. Horrible construction for many years. No reason to expand the area around here yet. Empty field across the freeway can be used for road. There ~~is/sat~~ are law enforcement stops that frequently stop traffic. There is not enough traffic to warrant as many proposed lanes for frontage road. Change proposed plans further south so less businesses will be affected.

Please make additional comments on the back. (Por favor de hacer sus comentarios adicionales atrás de esta forma.)

This comment form may be turned in tonight, mailed, or emailed by May 30, 2013 to the address below:
(Esta forma de comentario se puede regresar esta noche, por correo postal, o por correo electrónico antes del 30 de mayo de 2013 a:)

Director of Project Development
Texas Department of Transportation – Houston District
P.O. Box 1386
Houston, Texas 77251-1386
Email: hou-piowebmail@txdot.gov

COMMENT FORM
(FORMA DE COMENTARIO)

Public Hearing – US 59 (from Spur 10 to SH 99)
(Audiencia Pública – US 59 (desde Spur 10 hasta SH 99))

CSJ Nos. 0027-12-097, 0027-12-105, 0027-12-106, and 0027-12-114
May 16, 2013
(16 de mayo de 2013)

__**I am an Elected Official** (Soy Funcionario/a) **Position** (Posición):_____

Name and Mailing Address (Optional) (Nombre y Dirección [Opcional]):
Name (Nombre) Evangelina Garcia
Address (Dirección) 3714 Ave R Rosenberg Tx 77471
Email Address (Dirección de Correo Electrónico) * Work at 3444 Sw Freeway Rosenberg Tx 77471
Telephone (Teléfono) 713-367-9907

PLEASE CHECK THE APPROPRIATE ITEMS BELOW: (POR FAVOR COMPREBRE LOS ARTÍCULOS SIGUIENTES QUE SEAN APROPIADOS)

I am primarily interested in the project from the standpoint of a: (Estoy interesado en el proyecto del punto de vista de:)
__**Residential property owner or renter** (Propietario o inquilino residencial) __**Business property owner or lessee** (Propietario o inquilino del negocio)
✓**Other (Please explain)** (Otro [Por favor de explicar]) Employed at Ocusoft

Per Texas Transportation Code, §201.811(a)(5): check each of the following boxes that apply to you: (Por Código de Transportación de Tejas, §201.811(a)(5): apunte todo que aplique:)
__I am employed by TxDOT (Soy empleado de TxDOT)
__I do business with TxDOT (Tengo oficio con TxDOT)
__I could benefit monetarily from the project or other item about which I am commenting (Puedo beneficar monetariamente por hecho de este proyecto u otro asunto de cual estoy comentando)

How did you learn about this hearing? (¿Como se entero usted de esta audiencia?)

__**Newspaper** (Periódico) __**Notice in the Mail** (Aviso por Correo) __**Yard Signs** (Letreros en Jardines)
__**Other** (Please explain) (Otro [Por favor de explicar])_____

Do you support the proposed project? (¿Apoya usted el proyecto propuesto?) ___ **Yes** (Sí) ✓**No** (No) ___**Undecided** (No he decidido)

COMMENTS (COMENTARIOS): Recently an 18 wheeler lost control and nearly hit a building. I feel that it is very dangerous to do this.
It is not safe
DPS Law Inforcement stops traffic
Move 100 yards South Towards Farm Land
Take Out Dead Mans Curve
Not enough traffic warrants this change

Please make additional comments on the back. (Por favor de hacer sus comentarios adicionales atrás de esta forma.)

This comment form may be turned in tonight, mailed, or emailed by May 30, 2013 to the address below:
(Esta forma de comentario se puede regresar esta noche, por correo postal, o por correo electrónico antes del 30 de mayo de 2013 a:)

Director of Project Development
Texas Department of Transportation – Houston District
P.O. Box 1386
Houston, Texas 77251-1386
Email: hou-piowebmail@txdot.gov

COMMENT FORM
(FORMA DE COMENTARIO)

Public Hearing – US 59 (from Spur 10 to SH 99)
(Audiencia Pública – US 59 (desde Spur 10 hasta SH 99))

CSJ Nos. 0027-12-097, 0027-12-105, 0027-12-106, and 0027-12-114
May 16, 2013
(16 de mayo de 2013)

__**I am an Elected Official** (Soy Funcionario/a) **Position** (Posición):_____

Name and Mailing Address (Optional) (Nombre y Dirección [Opcional]):
Name (Nombre) Simmy Martinez
Address (Dirección) work 30444 Southwest Frwy Rosenberg TX 77471
Email Address (Dirección de Correo Electrónico)
Telephone (Teléfono) 832-757-7497

PLEASE CHECK THE APPROPRIATE ITEMS BELOW: (POR FAVOR COMPREBRE LOS ARTÍCULOS SIGUIENTES QUE SEAN APROPIADOS)

I am primarily interested in the project from the standpoint of a: (Estoy interesado en el proyecto del punto de vista de:)
__**Residential property owner or renter** (Propietario o inquilino residencial) __**Business property owner or lessee** (Propietario o inquilino del negocio)
✓**Other (Please explain)** (Otro [Por favor de explicar]) employee at Ocusoft

Per Texas Transportation Code, §201.811(a)(5): check each of the following boxes that apply to you: (Por Código de Transportación de Tejas, §201.811(a)(5): apunte todo que aplique:)
__I am employed by TxDOT (Soy empleado de TxDOT)
__I do business with TxDOT (Tengo oficio con TxDOT)
__I could benefit monetarily from the project or other item about which I am commenting (Puedo beneficar monetariamente por hecho de este proyecto u otro asunto de cual estoy comentando)

How did you learn about this hearing? (¿Como se entero usted de esta audiencia?)
✓**Newspaper** (Periódico) __**Notice in the Mail** (Aviso por Correo) __**Yard Signs** (Letreros en Jardines)
✓**Other** (Please explain) (Otro [Por favor de explicar])

Do you support the proposed project? (¿Apoya usted el proyecto propuesto?) ___ **Yes** (Sí) ✓ **No** (No) ___**Undecided** (No he decidido)

COMMENTS (COMENTARIOS): Safety, noise, Ops. Lawenforcement traffic stops. Dead mans Curve would be straightturning lanes on frontage Rd is not supported by the traffic in the area. move the lanes South one hundred feet.

Please make additional comments on the back. (Por favor de hacer sus comentarios adicionales atrás de esta forma.)

This comment form may be turned in tonight, mailed, or emailed by May 30, 2013 to the address below:
(Esta forma de comentario se puede regresar esta noche, por correo postal, o por correo electrónico antes del 30 de mayo de 2013 a:)

Director of Project Development
Texas Department of Transportation – Houston District
P.O. Box 1386
Houston, Texas 77251-1386
Email: hou-piowebmail@txdot.gov

COMMENT FORM
(FORMA DE COMENTARIO)

Public Hearing – US 59 (from Spur 10 to SH 99)
(Audiencia Pública – US 59 (desde Spur 10 hasta SH 99))

CSJ Nos. 0027-12-097, 0027-12-105, 0027-12-106, and 0027-12-114
May 16, 2013
(16 de mayo de 2013)

__**I am an Elected Official** (Soy Funcionario/a) **Position** (Posición):_____

Name and Mailing Address (Optional) (Nombre y Dirección [Opcional]):
Name (Nombre) Violanda Cisneros
Address (Dirección) 10423 Chimelik Rd. Needville 77461
Email Address (Dirección de Correo Electrónico) yolanda19@live.com
Telephone (Teléfono) WK at 30444 SWF Rosenberg 77471

PLEASE CHECK THE APPROPRIATE ITEMS BELOW: (POR FAVOR COMPREBRE LOS ARTÍCULOS SIGUIENTES QUE SEAN APROPIADOS)

I am primarily interested in the project from the standpoint of a: (Estoy interesado en el proyecto del punto de vista de:)
__**Residential property owner or renter** (Propietario o inquilino residencial) __**Business property owner or lessee** (Propietario o inquilino del negocio)
✓**Other (Please explain)** (Otro [Por favor de explicar]) Ocusoft employee

Per Texas Transportation Code, §201.811(a)(5): check each of the following boxes that apply to you: (Por Código de Transportación de Tejas, §201.811(a)(5): apunte todo que aplique:)
__I am employed by TxDOT (Soy empleado de TxDOT)
__I do business with TxDOT (Tengo oficio con TxDOT)
__I could benefit monetarily from the project or other item about which I am commenting (Puedo beneficar monetariamente por hecho de este proyecto u otro asunto de cual estoy comentando)

How did you learn about this hearing? (¿Como se entero usted de esta audiencia?)
✓**Newspaper** (Periódico) __**Notice in the Mail** (Aviso por Correo) __**Yard Signs** (Letreros en Jardines)
__**Other** (Please explain) (Otro [Por favor de explicar])_____

Do you support the proposed project? (¿Apoya usted el proyecto propuesto?) __ **Yes** (Sí) ✓ **No** (No) __**Undecided** (No he decidido)

COMMENTS (COMENTARIOS): @ Safty, noise DPS Law enforcement Stop traffice often! can they move the FW 100 foot South, we can take out dead mans curve, Turn lane is not (Frontage rd.) supported by the traffic in the area

Please make additional comments on the back. (Por favor de hacer sus comentarios adicionales atrás de esta forma.)

This comment form may be turned in tonight, mailed, or emailed by May 30, 2013 to the address below:
(Esta forma de comentario se puede regresar esta noche, por correo postal, o por correo electrónico antes del 30 de mayo de 2013 a:)

Director of Project Development
Texas Department of Transportation – Houston District
P.O. Box 1386
Houston, Texas 77251-1386
Email: hou-piowebmail@txdot.gov

COMMENT FORM
(FORMA DE COMENTARIO)

Public Hearing – US 59 (from Spur 10 to SH 99)
(Audiencia Pública – US 59 (desde Spur 10 hasta SH 99))

CSJ Nos. 0027-12-097, 0027-12-105, 0027-12-106, and 0027-12-114
May 16, 2013
(16 de mayo de 2013)

__**I am an Elected Official** (Soy Funcionario/a) **Position** (Posición): Warehouseman

Name and Mailing Address (Optional) (Nombre y Dirección [Opcional]):
Name (Nombre) Jeff Ruiz
Address (Dirección) 6130 Brdecka Lane Rosenberg, Tx 77471
Email Address (Dirección de Correo Electrónico)
Telephone (Teléfono) 281-341-5132

(employed @ OCuSoft 30444 Southwest Freeway Rosenberg, Tx 77471 @ OCuSoft)

PLEASE CHECK THE APPROPRIATE ITEMS BELOW: (POR FAVOR COMPREBRE LOS ARTÍCULOS SIGUIENTES QUE SEAN APROPIADOS)

I am primarily interested in the project from the standpoint of a: (Estoy interesado en el proyecto del punto de vista de:)
✓ **Residential property owner or renter** (Propietario o inquilino residencial) ✓ **Business property owner or lessee** (Propietario o inquilino del negocio)

__**Other (Please explain)** (Otro [Por favor de explicar]) _____

Per Texas Transportation Code, §201.811(a)(5): check each of the following boxes that apply to you: (Por Código de Transportación de Tejas, §201.811(a)(5): apunte todo que aplique:)
__I am employed by TxDOT (Soy empleado de TxDOT)
__I do business with TxDOT (Tengo oficio con TxDOT)
__I could benefit monetarily from the project or other item about which I am commenting (Puedo beneficar monetariamente por hecho de este proyecto u otro asunto de cual estoy comentando)

How did you learn about this hearing? (¿Como se entero usted de esta audiencia?)

__**Newspaper** (Periódico) __**Notice in the Mail** (Aviso por Correo) __**Yard Signs** (Letreros en Jardines)
✓ **Other** (Please explain) (Otro [Por favor de explicar]) _____

Do you support the proposed project? (¿Apoya usted el proyecto propuesto?) __ **Yes** (Sí) ✓ **No** (No) __**Undecided** (No he decidido)

COMMENTS (COMENTARIOS): Not as proposed! Safety-Noise- The freeway needs to be moved at least 100 ft. to the South (farm land) Employees @ OCuSoft could be in danger from the traffic. The frontage road (turning lanes are not supported by the amount of traffic.

Please make additional comments on the back. (Por favor de hacer sus comentarios adicionales atrás de esta forma.)

This comment form may be turned in tonight, mailed, or emailed by May 30, 2013 to the address below:
(Esta forma de comentario se puede regresar esta noche, por correo postal, o por correo electrónico antes del 30 de mayo de 2013 a:)

Director of Project Development
Texas Department of Transportation – Houston District
P.O. Box 1386
Houston, Texas 77251-1386
Email: hou-piowebmail@txdot.gov

COMMENT FORM
(FORMA DE COMENTARIO)

Public Hearing – US 59 (from Spur 10 to SH 99)
(Audiencia Pública – US 59 (desde Spur 10 hasta SH 99))

CSJ Nos. 0027-12-097, 0027-12-105, 0027-12-106, and 0027-12-114
May 16, 2013
(16 de mayo de 2013)

__**I am an Elected Official** (Soy Funcionario/a) **Position** (Posición):_____

Name and Mailing Address (Optional) (Nombre y Dirección [Opcional]):
Name (Nombre) Patrick Dewitt
Address (Dirección) 10750 Westbrae Pkway 1413 → 30444 Sw. Freeway Rosenberg, Tx 77471
Email Address (Dirección de Correo Electrónico) Ptrickneal @ Yahoo.com
Telephone (Teléfono) (832) 651-6520

PLEASE CHECK THE APPROPRIATE ITEMS BELOW: (POR FAVOR COMPREBRE LOS ARTÍCULOS SIGUIENTES QUE SEAN APROPIADOS)

I am primarily interested in the project from the standpoint of a: (Estoy interesado en el proyecto del punto de vista de:)
__**Residential property owner or renter** (Propietario o inquilino residencial) __**Business property owner or lessee** (Propietario o inquilino del negocio)
✓**Other (Please explain)** (Otro [Por favor de explicar]) Qu-Soft employee

Per Texas Transportation Code, §201.811(a)(5): check each of the following boxes that apply to you: (Por Código de Transportación de Tejas, §201.811(a)(5): apunte todo que aplique:)
__I am employed by TxDOT (Soy empleado de TxDOT)
✓I do business with TxDOT (Tengo oficio con TxDOT)
__I could benefit monetarily from the project or other item about which I am commenting (Puedo beneficar monetariamente por hecho de este proyecto u otro asunto de cual estoy comentando)

How did you learn about this hearing? (¿Como se entero usted de esta audiencia?)
✓**Newspaper** (Periódico) __**Notice in the Mail** (Aviso por Correo) __**Yard Signs** (Letreros en Jardines)
__**Other** (Please explain) (Otro [Por favor de explicar])_____

Do you support the proposed project? (¿Apoya usted el proyecto propuesto?) ___ **Yes** (Sí) ✓**No** (No) ___**Undecided** (No he decidido)

COMMENTS (COMENTARIOS): Safety Problems, Constant Law Enforcement, Possible Unimproved sight across the freeway, the frontage road is not supported by the area's traffic.

Please make additional comments on the back. (Por favor de hacer sus comentarios adicionales atrás de esta forma.)

This comment form may be turned in tonight, mailed, or emailed by May 30, 2013 to the address below:
(Esta forma de comentario se puede regresar esta noche, por correo postal, o por correo electrónico antes del 30 de mayo de 2013 a:)

Director of Project Development
Texas Department of Transportation – Houston District
P.O. Box 1386
Houston, Texas 77251-1386
Email: hou-piowebmail@txdot.gov

COMMENT FORM
(FORMA DE COMENTARIO)

Public Hearing – US 59 (from Spur 10 to SH 99)
(Audiencia Pública – US 59 (desde Spur 10 hasta SH 99))

CSJ Nos. 0027-12-097, 0027-12-105, 0027-12-106, and 0027-12-114
May 16, 2013
(16 de mayo de 2013)

__**I am an Elected Official** (Soy Funcionario/a) **Position** (Posición):_____

Name and Mailing Address (Optional) (Nombre y Dirección [Opcional]):
Name (Nombre) Becky Emig
Address (Dirección) 14102 Erin Dr Sugarland TX 77498 work at 30444 SW Freeway Rosenberg 77471
Email Address (Dirección de Correo Electrónico) bemig@ocusoft.com
Telephone (Teléfono) 281-239-9810

PLEASE CHECK THE APPROPRIATE ITEMS BELOW: (POR FAVOR COMPREBRE LOS ARTÍCULOS SIGUIENTES QUE SEAN APROPIADOS)

I am primarily interested in the project from the standpoint of a: (Estoy interesado en el proyecto del punto de vista de:)
__**Residential property owner or renter** (Propietario o inquilino residencial) __**Business property owner or lessee** (Propietario o inquilino del negocio)
✓**Other (Please explain)** (Otro [Por favor de explicar]) employee at Ocusoft

Per Texas Transportation Code, §201.811(a)(5): check each of the following boxes that apply to you: (Por Código de Transportación de Tejas, §201.811(a)(5): apunte todo que aplique:)
__I am employed by TxDOT (Soy empleado de TxDOT)
__I do business with TxDOT (Tengo oficio con TxDOT)
__I could benefit monetarily from the project or other item about which I am commenting (Puedo beneficar monetariamente por hecho de este proyecto u otro asunto de cual estoy comentando)

How did you learn about this hearing? (¿Como se entero usted de esta audiencia?)
✓**Newspaper** (Periódico) __**Notice in the Mail** (Aviso por Correo) __**Yard Signs** (Letreros en Jardines)
__**Other** (Please explain) (Otro [Por favor de explicar])_____

Do you support the proposed project? (¿Apoya usted el proyecto propuesto?) ___ **Yes** (Sí) ✓**No** (No) ___**Undecided** (No he decidido)

COMMENTS (COMENTARIOS): worried about safety and noise - OPS & Law Enforcement stopping traffic in front of our building.

Why not use the field across the freeway from us? It is for sale.

~~Th~~ Turning lanes on intersection on frontage road is not supported by traffic in this area.

Please make additional comments on the back. (Por favor de hacer sus comentarios adicionales atrás de esta forma.)

This comment form may be turned in tonight, mailed, or emailed by May 30, 2013 to the address below:
(Esta forma de comentario se puede regresar esta noche, por correo postal, o por correo electrónico antes del 30 de mayo de 2013 a:)

Director of Project Development
Texas Department of Transportation – Houston District
P.O. Box 1386
Houston, Texas 77251-1386
Email: hou-piowebmail@txdot.gov

COMMENT FORM
(FORMA DE COMENTARIO)

Public Hearing – US 59 (from Spur 10 to SH 99)
(Audiencia Pública – US 59 (desde Spur 10 hasta SH 99))

CSJ Nos. 0027-12-097, 0027-12-105, 0027-12-106, and 0027-12-114
May 16, 2013
(16 de mayo de 2013)

__**I am an Elected Official** (Soy Funcionario/a) **Position** (Posición):_____

Name and Mailing Address (Optional) (Nombre y Dirección [Opcional]):
Name (Nombre) Sharon Rosenbaum 2920 Talasek - Rosenberg.
Address (Dirección) 30444 Southwest Freeway work Rosenberg, 77471 Ocusoft
Email Address (Dirección de Correo Electrónico) S.Rosenbaum@ocusof.com
Telephone (Teléfono) 832-746-9852

PLEASE CHECK THE APPROPRIATE ITEMS BELOW: (POR FAVOR COMPREBRE LOS ARTÍCULOS SIGUIENTES QUE SEAN APROPIADOS)

I am primarily interested in the project from the standpoint of a: (Estoy interesado en el proyecto del punto de vista de:)
__**Residential property owner or renter** (Propietario o inquilino residencial) __**Business property owner or lessee** (Propietario o inquilino del negocio)
✓**Other (Please explain)** (Otro [Por favor de explicar]) Work and newspaper

Per Texas Transportation Code, §201.811(a)(5): check each of the following boxes that apply to you: (Por Código de Transportación de Tejas, §201.811(a)(5): apunte todo que aplique:)
__I am employed by TxDOT (Soy empleado de TxDOT)
__I do business with TxDOT (Tengo oficio con TxDOT)
__I could benefit monetarily from the project or other item about which I am commenting (Puedo beneficar monetariamente por hecho de este proyecto u otro asunto de cual estoy comentando)

How did you learn about this hearing? (¿Como se entero usted de esta audiencia?)
✓**Newspaper** (Periódico) __**Notice in the Mail** (Aviso por Correo) __**Yard Signs** (Letreros en Jardines)
__**Other** (Please explain) (Otro [Por favor de explicar]) Work at Ocusoft.

Do you support the proposed project? (¿Apoya usted el proyecto propuesto?) __ **Yes** (Sí) ✓**No** (No) __**Undecided** (No he decidido)

COMMENTS (COMENTARIOS): Concerned of safety Ops is always stopping in front of the building. Truck will be close to the building, glass, windows, Rocks, The noise is loud now & will be worse & Rumbles, The curve would be straighter at "Dead man's curve", if you would take from the other side of the freeway at least 100 feet. buy from the cotton fields that are for sale. Having that many turning lanes does not support the amount of Traffic for 529

Please make additional comments on the back. (Por favor de hacer sus comentarios adicionales atrás de esta forma.)

This comment form may be turned in tonight, mailed, or emailed by May 30, 2013 to the address below:
(Esta forma de comentario se puede regresar esta noche, por correo postal, o por correo electrónico antes del 30 de mayo de 2013 a:)

Director of Project Development
Texas Department of Transportation – Houston District
P.O. Box 1386
Houston, Texas 77251-1386
Email: hou-piowebmail@txdot.gov

COMMENT FORM
(FORMA DE COMENTARIO)

Public Hearing – US 59 (from Spur 10 to SH 99)
(Audiencia Pública – US 59 (desde Spur 10 hasta SH 99))

CSJ Nos. 0027-12-097, 0027-12-105, 0027-12-106, and 0027-12-114
May 16, 2013
(16 de mayo de 2013)

__**I am an Elected Official** (Soy Funcionario/a) **Position** (Posición):_____

Name and Mailing Address (Optional) (Nombre y Dirección [Opcional]):
Name (Nombre) Lucinda Diffurth
Address (Dirección) 10303 Vacek Rd Richmond, Tx 77469 / 30444 S.W. Frwy Rosenberg Tx work @
Email Address (Dirección de Correo Electrónico)_____
Telephone (Teléfono)_____

PLEASE CHECK THE APPROPRIATE ITEMS BELOW: (POR FAVOR COMPREBRE LOS ARTÍCULOS SIGUIENTES QUE SEAN APROPIADOS)

I am primarily interested in the project from the standpoint of a: (Estoy interesado en el proyecto del punto de vista de:)
__**Residential property owner or renter** (Propietario o inquilino residencial) __**Business property owner or lessee** (Propietario o inquilino del negocio)
✓**Other (Please explain)** (Otro [Por favor de explicar]) Employee of local Business. Acusoft

Per Texas Transportation Code, §201.811(a)(5): check each of the following boxes that apply to you: (Por Código de Transportación de Tejas, §201.811(a)(5): apunte todo que aplique:)
__I am employed by TxDOT (Soy empleado de TxDOT)
__I do business with TxDOT (Tengo oficio con TxDOT)
✓I could benefit monetarily from the project or other item about which I am commenting (Puedo beneficar monetariamente por hecho de este proyecto u otro asunto de cual estoy comentando)

How did you learn about this hearing? (¿Como se entero usted de esta audiencia?)
✓**Newspaper** (Periódico) __**Notice in the Mail** (Aviso por Correo) __**Yard Signs** (Letreros en Jardines)
✓**Other** (Please explain) (Otro [Por favor de explicar]) Employee R

Do you support the proposed project? (¿Apoya usted el proyecto propuesto?) ✓ **Yes** (Sí) ✓ **No** (No) __**Undecided** (No he decidido) as proposed

COMMENTS (COMENTARIOS): Need to move 100 feet South that property is already 4 Sale.
It's not safe if our parking lot is next to Freeway.
DPS - Law Enforcement Stops Car's in front of property.
Move South to take out Deadmans curve.

Please make additional comments on the back. (Por favor de hacer sus comentarios adicionales atrás de esta forma.)
Too many turning lanes @ intersection on Frontage Rd not supported by traffic.

This comment form may be turned in tonight, mailed, or emailed by May 30, 2013 to the address below:
(Esta forma de comentario se puede regresar esta noche, por correo postal, o por correo electrónico antes del 30 de mayo de 2013 a:)

Director of Project Development
Texas Department of Transportation – Houston District
P.O. Box 1386
Houston, Texas 77251-1386
Email: hou-piowebmail@txdot.gov

COMMENT FORM
(FORMA DE COMENTARIO)

Public Hearing – US 59 (from Spur 10 to SH 99)
(Audiencia Pública – US 59 (desde Spur 10 hasta SH 99))

CSJ Nos. 0027-12-097, 0027-12-105, 0027-12-106, and 0027-12-114
May 16, 2013
(16 de mayo de 2013)

__**I am an Elected Official** (Soy Funcionario/a) **Position** (Posición):_____

Name and Mailing Address (Optional) (Nombre y Dirección [Opcional]):
Name (Nombre) Gabriel Lizalde => wife works at Ocusoft. Inc
Address (Dirección) 1519 Ave D. Ros. Tx 77471 / 30444 SW Frwy Rosenberg Tx 77471
Email Address (Dirección de Correo Electrónico) Oferoc e yahoo.com
Telephone (Teléfono) 832-230-7638

PLEASE CHECK THE APPROPRIATE ITEMS BELOW: (POR FAVOR COMPREBRE LOS ARTÍCULOS SIGUIENTES QUE SEAN APROPIADOS)

I am primarily interested in the project from the standpoint of a: (Estoy interesado en el proyecto del punto de vista de:)
__**Residential property owner or renter** (Propietario o inquilino residencial) __**Business property owner or lessee** (Propietario o inquilino del negocio)

✓**Other (Please explain)** (Otro [Por favor de explicar]) wife works e Ocusoft Inc. 30444 SW Frwy Rosenberg Tx 77471

Per Texas Transportation Code, §201.811(a)(5): check each of the following boxes that apply to you: (Por Código de Transportación de Tejas, §201.811(a)(5): apunte todo que aplique:)
__I am employed by TxDOT (Soy empleado de TxDOT)
__I do business with TxDOT (Tengo oficio con TxDOT)
__I could benefit monetarily from the project or other item about which I am commenting (Puedo beneficar monetariamente por hecho de este proyecto u otro asunto de cual estoy comentando)

How did you learn about this hearing? (¿Como se entero usted de esta audiencia?)

✓**Newspaper** (Periódico) __**Notice in the Mail** (Aviso por Correo) __**Yard Signs** (Letreros en Jardines)
__**Other** (Please explain) (Otro [Por favor de explicar]) _____

Do you support the proposed project? (¿Apoya usted el proyecto propuesto?) ___ **Yes** (Sí) ✓ **No** (No) ___**Undecided** (No he decidido)

COMMENTS (COMENTARIOS): I am afraid for my wife's saftey at her job if US 59 is expanded into Ocusoft's land. There is too much trafic for that road to be so close to company. To many police stops are done near her job, can you imagine if one went wrong being so close to their front offices? If a vehicle went off the road like 18 wheeler did not long ago. then it would run straight into ocusoft.

Please make additional comments on the back. (Por favor de hacer sus comentarios adicionales atrás de esta forma.)

This comment form may be turned in tonight, mailed, or emailed by May 30, 2013 to the address below:
(Esta forma de comentario se puede regresar esta noche, por correo postal, o por correo electrónico antes del 30 de mayo de 2013 a:)

Director of Project Development
Texas Department of Transportation – Houston District
P.O. Box 1386
Houston, Texas 77251-1386
Email: hou-piowebmail@txdot.gov

COMMENT FORM
(FORMA DE COMENTARIO)

Public Hearing – US 59 (from Spur 10 to SH 99)
(Audiencia Pública – US 59 (desde Spur 10 hasta SH 99))

CSJ Nos. 0027-12-097, 0027-12-105, 0027-12-106, and 0027-12-114
May 16, 2013
(16 de mayo de 2013)

__**I am an Elected Official** (Soy Funcionario/a) **Position** (Posición):_____

Name and Mailing Address (Optional) (Nombre y Dirección [Opcional]):
Name (Nombre) Enrique Hernandez
Address (Dirección) 1800 Richmond TX 77469
Email Address (Dirección de Correo Electrónico) Hank-2H@yahoo.com
Telephone (Teléfono) 713-392-5585

PLEASE CHECK THE APPROPRIATE ITEMS BELOW: (POR FAVOR COMPREBRE LOS ARTÍCULOS SIGUIENTES QUE SEAN APROPIADOS)

I am primarily interested in the project from the standpoint of a: (Estoy interesado en el proyecto del punto de vista de:)
__**Residential property owner or renter** (Propietario o inquilino residencial) ✓**Business property owner or lessee** (Propietario o inquilino del negocio) Employee of Ousoft 30444 SW Freeway Richmond TX 77471
✓**Other (Please explain)** (Otro [Por favor de explicar]) work in the area

Per Texas Transportation Code, §201.811(a)(5): check each of the following boxes that apply to you: (Por Código de Transportación de Tejas, §201.811(a)(5): apunte todo que aplique:)
__I am employed by TxDOT (Soy empleado de TxDOT)
__I do business with TxDOT (Tengo oficio con TxDOT)
__I could benefit monetarily from the project or other item about which I am commenting (Puedo beneficar monetariamente por hecho de este proyecto u otro asunto de cual estoy comentando)

How did you learn about this hearing? (¿Como se entero usted de esta audiencia?)
✓**Newspaper** (Periódico) __**Notice in the Mail** (Aviso por Correo) __**Yard Signs** (Letreros en Jardines)
__**Other** (Please explain) (Otro [Por favor de explicar])_____

Do you support the proposed project? (¿Apoya usted el proyecto propuesto?) ___**Yes** (Sí) ✓**No** (No) ___**Undecided** (No he decidido)

COMMENTS (COMENTARIOS):
I am worried about the amount of traffic and potential accidents that could happen in the area. as well as safety with such easy of access to the business for that.

Please make additional comments on the back. (Por favor de hacer sus comentarios adicionales atrás de esta forma.)

This comment form may be turned in tonight, mailed, or emailed by May 30, 2013 to the address below:
(Esta forma de comentario se puede regresar esta noche, por correo postal, o por correo electrónico antes del 30 de mayo de 2013 a:)

Director of Project Development
Texas Department of Transportation – Houston District
P.O. Box 1386
Houston, Texas 77251-1386
Email: hou-piowebmail@txdot.gov

COMMENT FORM
(FORMA DE COMENTARIO)

Public Hearing – US 59 (from Spur 10 to SH 99)
(Audiencia Pública – US 59 (desde Spur 10 hasta SH 99))

CSJ Nos. 0027-12-097, 0027-12-105, 0027-12-106, and 0027-12-114
May 16, 2013
(16 de mayo de 2013)

__**I am an Elected Official** (Soy Funcionario/a) **Position** (Posición):_____

Name and Mailing Address (Optional) (Nombre y Dirección [Opcional]):
Name (Nombre) Linda Dang
Address (Dirección) 2505 Briar Ridge Dr., Houston, TX 77057
Email Address (Dirección de Correo Electrónico) linda.dang@gmail.com
Telephone (Teléfono) (713) 446-4073

PLEASE CHECK THE APPROPRIATE ITEMS BELOW: (POR FAVOR COMPREBRE LOS ARTÍCULOS SIGUIENTES QUE SEAN APROPIADOS)

I am primarily interested in the project from the standpoint of a: (Estoy interesado en el proyecto del punto de vista de:)
__**Residential property owner or renter** (Propietario o inquilino residencial) ✓**Business property owner or lessee** (Propietario o inquilino del negocio) Oracle
✓**Other (Please explain)** (Otro [Por favor de explicar]) Employee at 3044 Southwest Fwy.

Per Texas Transportation Code, §201.811(a)(5): check each of the following boxes that apply to you: (Por Código de Transportación de Tejas, §201.811(a)(5): apunte todo que aplique:)
__I am employed by TxDOT (Soy empleado de TxDOT)
__I do business with TxDOT (Tengo oficio con TxDOT)
__I could benefit monetarily from the project or other item about which I am commenting (Puedo beneficar monetariamente por hecho de este proyecto u otro asunto de cual estoy comentando)

How did you learn about this hearing? (¿Como se entero usted de esta audiencia?)
✓**Newspaper** (Periódico) __**Notice in the Mail** (Aviso por Correo) __**Yard Signs** (Letreros en Jardines)
__**Other** (Please explain) (Otro [Por favor de explicar]) _____

Do you support the proposed project? (¿Apoya usted el proyecto propuesto?) ___ **Yes** (Sí) ✓**No** (No) ___**Undecided** (No he decidido)

COMMENTS (COMENTARIOS): I do not support the proposed project. There are women who work late hours, including myself and the increased traffic poses a safety threat. The proximity of the proposed access roads to our campus is also a concern because of the added noise and exposure to traffic incidents. I would suggest moving the project further south where businesses are not as affected.

Please make additional comments on the back. (Por favor de hacer sus comentarios adicionales atrás de esta forma.)

This comment form may be turned in tonight, mailed, or emailed by May 30, 2013 to the address below:
(Esta forma de comentario se puede regresar esta noche, por correo postal, o por correo electrónico antes del 30 de mayo de 2013 a:)

Director of Project Development
Texas Department of Transportation – Houston District
P.O. Box 1386
Houston, Texas 77251-1386
Email: hou-piowebmail@txdot.gov

COMMENT FORM
(FORMA DE COMENTARIO)

Public Hearing – US 59 (from Spur 10 to SH 99)
(Audiencia Pública – US 59 (desde Spur 10 hasta SH 99))

CSJ Nos. 0027-12-097, 0027-12-105, 0027-12-106, and 0027-12-114
May 16, 2013
(16 de mayo de 2013)

__**I am an Elected Official** (Soy Funcionario/a) **Position** (Posición):_____

Name and Mailing Address (Optional) (Nombre y Dirección [Opcional]):
Name (Nombre) Joe Aguillon
Address (Dirección) 15218 Lance Circle, Houston, TX. 77053
Email Address (Dirección de Correo Electrónico) joeaguillon@yahoo.com
Telephone (Teléfono) 832-344-8311

PLEASE CHECK THE APPROPRIATE ITEMS BELOW: (POR FAVOR COMPREBRE LOS ARTÍCULOS SIGUIENTES QUE SEAN APROPIADOS)

I am primarily interested in the project from the standpoint of a: (Estoy interesado en el proyecto del punto de vista de:)
__**Residential property owner or renter** (Propietario o inquilino residencial) ✓**Business property owner or lessee** (Propietario o inquilino del negocio) Ocusoft
✓**Other (Please explain)** (Otro [Por favor de explicar]) Employee @ 20444 SW Freeway

Per Texas Transportation Code, §201.811(a)(5): check each of the following boxes that apply to you: (Por Código de Transportación de Tejas, §201.811(a)(5): apunte todo que aplique:)
__I am employed by TxDOT (Soy empleado de TxDOT)
__I do business with TxDOT (Tengo oficio con TxDOT)
__I could benefit monetarily from the project or other item about which I am commenting (Puedo beneficar monetariamente por hecho de este proyecto u otro asunto de cual estoy comentando)

How did you learn about this hearing? (¿Como se entero usted de esta audiencia?)
✓**Newspaper** (Periódico) __**Notice in the Mail** (Aviso por Correo) __**Yard Signs** (Letreros en Jardines)
__**Other** (Please explain) (Otro [Por favor de explicar])_____

Do you support the proposed project? (¿Apoya usted el proyecto propuesto?) ___ **Yes** (Sí) ✓ **No** (No) ___**Undecided** (No he decidido)

COMMENTS (COMENTARIOS): I am not in support of the proposed project. It will be a safety issue since it will be very close to our door. If it was to move further south about 200 yards that should be o.k.
You may know that it is less expensive to purchase farm land than business life.

Please make additional comments on the back. (Por favor de hacer sus comentarios adicionales atrás de esta forma.)

This comment form may be turned in tonight, mailed, or emailed by May 30, 2013 to the address below:
(Esta forma de comentario se puede regresar esta noche, por correo postal, o por correo electrónico antes del 30 de mayo de 2013 a:)

Director of Project Development
Texas Department of Transportation – Houston District
P.O. Box 1386
Houston, Texas 77251-1386
Email: hou-piowebmail@txdot.gov

COMMENT FORM
(FORMA DE COMENTARIO)

Public Hearing – US 59 (from Spur 10 to SH 99)
(Audiencia Pública – US 59 (desde Spur 10 hasta SH 99))

CSJ Nos. 0027-12-097, 0027-12-105, 0027-12-106, and 0027-12-114
May 16, 2013
(16 de mayo de 2013)

__**I am an Elected Official** (Soy Funcionario/a) **Position** (Posición):_____

Name and Mailing Address (Optional) (Nombre y Dirección [Opcional]):
Name (Nombre) Joe Gregory
Address (Dirección) 13105 Barek Rd. Guy, Tx. 77444
Email Address (Dirección de Correo Electrónico)_____
Telephone (Teléfono) 979-793-[redacted] 6938

PLEASE CHECK THE APPROPRIATE ITEMS BELOW: (POR FAVOR COMPREBRE LOS ARTÍCULOS SIGUIENTES QUE SEAN APROPIADOS)

I am primarily interested in the project from the standpoint of a: (Estoy interesado en el proyecto del punto de vista de:)
__**Residential property owner or renter** (Propietario o inquilino residencial)
✓**Business property owner or lessee** (Propietario o inquilino del negocio) Ocusoft
✓**Other (Please explain)** (Otro [Por favor de explicar]) Employee 30444 SW Fwy.

Per Texas Transportation Code, §201.811(a)(5): check each of the following boxes that apply to you: (Por Código de Transportación de Tejas, §201.811(a)(5): apunte todo que aplique:)
__I am employed by TxDOT (Soy empleado de TxDOT)
__I do business with TxDOT (Tengo oficio con TxDOT)
__I could benefit monetarily from the project or other item about which I am commenting (Puedo beneficar monetariamente por hecho de este proyecto u otro asunto de cual estoy comentando)

How did you learn about this hearing? (¿Como se entero usted de esta audiencia?)
✓**Newspaper** (Periódico) __**Notice in the Mail** (Aviso por Correo) __**Yard Signs** (Letreros en Jardines)
__**Other** (Please explain) (Otro [Por favor de explicar])_____

Do you support the proposed project? (¿Apoya usted el proyecto propuesto?) ___**Yes** (Sí) ✓**No** (No) ___**Undecided** (No he decidido)
Not As Proposed

COMMENTS (COMENTARIOS): Proposed Exit For Kroesche Rd. & 529 will cause Heavy Traffic & Noise To Place I work. Increased Traffic could Become A Security Problem. Would make sense To move South Approx. 100 ft. into Farmland.

Please make additional comments on the back. (Por favor de hacer sus comentarios adicionales atrás de esta forma.)

This comment form may be turned in tonight, mailed, or emailed by May 30, 2013 to the address below:
(Esta forma de comentario se puede regresar esta noche, por correo postal, o por correo electrónico antes del 30 de mayo de 2013 a:)

Director of Project Development
Texas Department of Transportation – Houston District
P.O. Box 1386
Houston, Texas 77251-1386
Email: hou-piowebmail@txdot.gov

COMMENT FORM
(FORMA DE COMENTARIO)

Public Hearing – US 59 (from Spur 10 to SH 99)
(Audiencia Pública – US 59 (desde Spur 10 hasta SH 99))

CSJ Nos. 0027-12-097, 0027-12-105, 0027-12-106, and 0027-12-114
May 16, 2013
(16 de mayo de 2013)

__**I am an Elected Official** (Soy Funcionario/a) **Position** (Posición):_____

Name and Mailing Address (Optional) (Nombre y Dirección [Opcional]):
Name (Nombre) Troy Smith
Address (Dirección) 4934 Lawson Lake Lane Richmond TX 77406
Email Address (Dirección de Correo Electrónico) tsmith@ocusoft.com
Telephone (Teléfono) 281-342-3350

PLEASE CHECK THE APPROPRIATE ITEMS BELOW: (POR FAVOR COMPREBRE LOS ARTÍCULOS SIGUIENTES QUE SEAN APROPIADOS)

I am primarily interested in the project from the standpoint of a: (Estoy interesado en el proyecto del punto de vista de:)
__**Residential property owner or renter** (Propietario o inquilino residencial)
✓**Business property owner or lessee** (Propietario o inquilino del negocio) Ocusoft
✓**Other (Please explain)** (Otro [Por favor de explicar]) Employee of 30444 SW Freeway

Per Texas Transportation Code, §201.811(a)(5): check each of the following boxes that apply to you: (Por Código de Transportación de Tejas, §201.811(a)(5): apunte todo que aplique:)
__I am employed by TxDOT (Soy empleado de TxDOT)
__I do business with TxDOT (Tengo oficio con TxDOT)
__I could benefit monetarily from the project or other item about which I am commenting (Puedo beneficar monetariamente por hecho de este proyecto u otro asunto de cual estoy comentando)

How did you learn about this hearing? (¿Como se entero usted de esta audiencia?)
✓**Newspaper** (Periódico) __**Notice in the Mail** (Aviso por Correo) __**Yard Signs** (Letreros en Jardines)
__**Other** (Please explain) (Otro [Por favor de explicar])

Do you support the proposed project? (¿Apoya usted el proyecto propuesto?) ___ **Yes** (Sí) ✓ **No** (No) Not as proposed ___**Undecided** (No he decidido)

COMMENTS (COMENTARIOS): Recommend move 100 ft. South to farmland. The farmland will be less expensive because it is undeveloped. New proposal will be disruptive noise and a potential security risk because of increased exposure to unsecured parking lot. Safety of semi-trucks passing close to the building and potentially wrecking into building.

Please make additional comments on the back. (Por favor de hacer sus comentarios adicionales atrás de esta forma.)

This comment form may be turned in tonight, mailed, or emailed by May 30, 2013 to the address below:
(Esta forma de comentario se puede regresar esta noche, por correo postal, o por correo electrónico antes del 30 de mayo de 2013 a:)

Director of Project Development
Texas Department of Transportation – Houston District
P.O. Box 1386
Houston, Texas 77251-1386
Email: hou-piowebmail@txdot.gov

COMMENT FORM
(FORMA DE COMENTARIO)

Public Hearing – US 59 (from Spur 10 to SH 99)
(Audiencia Pública – US 59 (desde Spur 10 hasta SH 99))

CSJ Nos. 0027-12-097, 0027-12-105, 0027-12-106, and 0027-12-114
May 16, 2013
(16 de mayo de 2013)

__**I am an Elected Official** (Soy Funcionario/a) **Position** (Posición):_____

Name and Mailing Address (Optional) (Nombre y Dirección [Opcional]):
Name (Nombre) Thomas mason
Address (Dirección) 1015 Pony Lane Wallis TX 77485
Email Address (Dirección de Correo Electrónico)_____
Telephone (Teléfono) 281-636-1991

PLEASE CHECK THE APPROPRIATE ITEMS BELOW: (POR FAVOR COMPREBRE LOS ARTÍCULOS SIGUIENTES QUE SEAN APROPIADOS)

I am primarily interested in the project from the standpoint of a: (Estoy interesado en el proyecto del punto de vista de:)
✓ **Residential property owner or renter** (Propietario o inquilino residencial) __**Business property owner or lessee** (Propietario o inquilino del negocio)

__**Other (Please explain)** (Otro [Por favor de explicar]) Employee of Ocusoft 30444 SW Freeway, Rosenberg, TX 77471

Per Texas Transportation Code, §201.811(a)(5): check each of the following boxes that apply to you: (Por Código de Transportación de Tejas, §201.811(a)(5): apunte todo que aplique:)
__I am employed by TxDOT (Soy empleado de TxDOT)
__I do business with TxDOT (Tengo oficio con TxDOT)
__I could benefit monetarily from the project or other item about which I am commenting (Puedo beneficar monetariamente por hecho de este proyecto u otro asunto de cual estoy comentando)

How did you learn about this hearing? (¿Como se entero usted de esta audiencia?)
✓ **Newspaper** (Periódico) __**Notice in the Mail** (Aviso por Correo) __**Yard Signs** (Letreros en Jardines)
__**Other** (Please explain) (Otro [Por favor de explicar])_____

Do you support the proposed project? (¿Apoya usted el proyecto propuesto?) ___ **Yes** (Sí) ✓ **No** (No) ___**Undecided** (No he decidido)

COMMENTS (COMENTARIOS): This project will cause excess ~~noise~~ noise and additional safety concerns for our office our company deals in pharma and thus we have safety concern over and above normal busnisses. This project as proposed will increase ~~cars~~ traffic on our road. at a very least I would suggest moving the road 100' to the south a way from Ocusoft

Please make additional comments on the back. (Por favor de hacer sus comentarios adicionales atrás de esta forma.)

This comment form may be turned in tonight, mailed, or emailed by May 30, 2013 to the address below:
(Esta forma de comentario se puede regresar esta noche, por correo postal, o por correo electrónico antes del 30 de mayo de 2013 a:)

Director of Project Development
Texas Department of Transportation – Houston District
P.O. Box 1386
Houston, Texas 77251-1386
Email: hou-piowebmail@txdot.gov

COMMENT FORM
(FORMA DE COMENTARIO)

Public Hearing – US 59 (from Spur 10 to SH 99)
(Audiencia Pública – US 59 (desde Spur 10 hasta SH 99))

CSJ Nos. 0027-12-097, 0027-12-105, 0027-12-106, and 0027-12-114
May 16, 2013
(16 de mayo de 2013)

__**I am an Elected Official** (Soy Funcionario/a) **Position** (Posición):_____

Name and Mailing Address (Optional) (Nombre y Dirección [Opcional]):
Name (Nombre) Marilyn Parker
Address (Dirección) 7219 Buchanan Drive, Richmond TX 77469
Email Address (Dirección de Correo Electrónico) marilynp69@GMAIL.com
Telephone (Teléfono) 832-655-8585

PLEASE CHECK THE APPROPRIATE ITEMS BELOW: (POR FAVOR COMPREBRE LOS ARTÍCULOS SIGUIENTES QUE SEAN APROPIADOS)

I am primarily interested in the project from the standpoint of a: (Estoy interesado en el proyecto del punto de vista de:)
__**Residential property owner or renter** (Propietario o inquilino residencial) __**Business property owner or lessee** (Propietario o inquilino del negocio)
✓**Other (Please explain)** (Otro [Por favor de explicar]) Employee of Acusoft at 30444 Southwest Freeway, Rosenberg, TX 77471

Per Texas Transportation Code, §201.811(a)(5): check each of the following boxes that apply to you: (Por Código de Transportación de Tejas, §201.811(a)(5): apunte todo que aplique:)
__I am employed by TxDOT (Soy empleado de TxDOT)
__I do business with TxDOT (Tengo oficio con TxDOT)
__I could benefit monetarily from the project or other item about which I am commenting (Puedo beneficar monetariamente por hecho de este proyecto u otro asunto de cual estoy comentando)

How did you learn about this hearing? (¿Como se entero usted de esta audiencia?)
X**Newspaper** (Periódico) __**Notice in the Mail** (Aviso por Correo) __**Yard Signs** (Letreros en Jardines)
__**Other** (Please explain) (Otro [Por favor de explicar])_____

Do you support the proposed project? (¿Apoya usted el proyecto propuesto?) ___ **Yes** (Sí) X **No** (No) ___**Undecided** (No he decidido) Not as proposed

COMMENTS (COMENTARIOS):
The traffic does not exist for a Kroesche exit. I am worried about the safety of working late @ night with the easy access of the feeder traffic to the buildings. I-69/18 wheeler traffic will cause severe vibrations & noise & will cause disruption of my daily work. Wrecks will be more prominent.

Please make additional comments on the back. (Por favor de hacer sus comentarios adicionales atrás de esta forma.)

This comment form may be turned in tonight, mailed, or emailed by May 30, 2013 to the address below:
(Esta forma de comentario se puede regresar esta noche, por correo postal, o por correo electrónico antes del 30 de mayo de 2013 a:)

Director of Project Development
Texas Department of Transportation – Houston District
P.O. Box 1386
Houston, Texas 77251-1386
Email: hou-piowebmail@txdot.gov

COMMENT FORM
(FORMA DE COMENTARIO)

Public Hearing – US 59 (from Spur 10 to SH 99)
(Audiencia Pública – US 59 (desde Spur 10 hasta SH 99))

CSJ Nos. 0027-12-097, 0027-12-105, 0027-12-106, and 0027-12-114
May 16, 2013
(16 de mayo de 2013)

__**I am an Elected Official** (Soy Funcionario/a) **Position** (Posición):_____

Name and Mailing Address (Optional) (Nombre y Dirección [Opcional]):
Name (Nombre) BARBARA KUNZ
Address (Dirección) 1208 MULCAHY, ROSENBERG, TX 77471
Email Address (Dirección de Correo Electrónico) LJK42@YAHOO.COM
Telephone (Teléfono) 281-342-8749

PLEASE CHECK THE APPROPRIATE ITEMS BELOW: (POR FAVOR COMPREBRE LOS ARTÍCULOS SIGUIENTES QUE SEAN APROPIADOS)

I am primarily interested in the project from the standpoint of a: (Estoy interesado en el proyecto del punto de vista de:)
__**Residential property owner or renter** (Propietario o inquilino residencial) __**Business property owner or lessee** (Propietario o inquilino del negocio)

__**Other (Please explain)** (Otro [Por favor de explicar]) Employee of Ocusoft
30444 SW FREEWAY, ROSENBERG TX 77471

Per Texas Transportation Code, §201.811(a)(5): check each of the following boxes that apply to you: (Por Código de Transportación de Tejas, §201.811(a)(5): apunte todo que aplique:)
__I am employed by TxDOT (Soy empleado de TxDOT)
__I do business with TxDOT (Tengo oficio con TxDOT)
__I could benefit monetarily from the project or other item about which I am commenting (Puedo beneficar monetariamente por hecho de este proyecto u otro asunto de cual estoy comentando)

How did you learn about this hearing? (¿Como se entero usted de esta audiencia?)

✓**Newspaper** (Periódico) __**Notice in the Mail** (Aviso por Correo) __**Yard Signs** (Letreros en Jardines)
__**Other** (Please explain) (Otro [Por favor de explicar]) EMPLOYEE OF 30444 SWFY

Do you support the proposed project? (¿Apoya usted el proyecto propuesto?) ___ **Yes** (Sí) ✓ **No** (No) ___**Undecided** (No he decidido)

COMMENTS (COMENTARIOS): THIS PROJECT HAS UNSUPPORTED TRAFFIC FOR 5 LANES. COULD USE GREEN AREA FOR EXPANSION. CHANGE THE ANGLE OF FREEWAY TO STRAIGHTEN 59. SAFETY WILL BE A REAL ISSUE FOR WORKERS BECAUSE FREEWAY WILL BE EXPANDED TO MY WORKPLACE - OCUSOFT = TRAFFIC / SAFETY GETTING DANGEROUS FOR EMPLOYEES. IT WOULD BE EASIER TO APPROPRIATE FARMERS FOR SALE OF PROPERTY. IT COULD HARM MY EMPLOYMENT BECAUSE LOSS OF REVENUE FOR MY COMPANIES FUTURE EXPANSION. EXPAND ROAD WHEN TRAFFIC WARRANTS. WHY WASTE OUR MONEY WHEN NEEDED

Please make additional comments on the back. (Por favor de hacer sus comentarios adicionales atrás de esta forma.)

This comment form may be turned in tonight, mailed, or emailed by May 30, 2013 to the address below:
(Esta forma de comentario se puede regresar esta noche, por correo postal, o por correo electrónico antes del 30 de mayo de 2013 a:)

Director of Project Development
Texas Department of Transportation – Houston District
P.O. Box 1386
Houston, Texas 77251-1386
Email: hou-piowebmail@txdot.gov

COMMENT FORM
(FORMA DE COMENTARIO)

Public Hearing – US 59 (from Spur 10 to SH 99)
(Audiencia Pública – US 59 (desde Spur 10 hasta SH 99))

CSJ Nos. 0027-12-097, 0027-12-105, 0027-12-106, and 0027-12-114
May 16, 2013
(16 de mayo de 2013)

__**I am an Elected Official** (Soy Funcionario/a) **Position** (Posición):_____

Name and Mailing Address (Optional) (Nombre y Dirección [Opcional]):
Name (Nombre) Suzanne Moon
Address (Dirección) 1922 Victoria Garden Richmond TX 77406
Email Address (Dirección de Correo Electrónico) stmoon@sbcglobal.net
Telephone (Teléfono) 281-232-5476

PLEASE CHECK THE APPROPRIATE ITEMS BELOW: (POR FAVOR COMPREBRE LOS ARTÍCULOS SIGUIENTES QUE SEAN APROPIADOS)

I am primarily interested in the project from the standpoint of a: (Estoy interesado en el proyecto del punto de vista de:)
__**Residential property owner or renter** (Propietario o inquilino residencial)
__**Business property owner or lessee** (Propietario o inquilino del negocio)
✓**Other (Please explain)** (Otro [Por favor de explicar]) employee of OCuSOFT Inc. 30444 SW Freeway Rosenberg, TX 77471

Per Texas Transportation Code, §201.811(a)(5): check each of the following boxes that apply to you: (Por Código de Transportación de Tejas, §201.811(a)(5): apunte todo que aplique:)
__I am employed by TxDOT (Soy empleado de TxDOT)
__I do business with TxDOT (Tengo oficio con TxDOT)
__I could benefit monetarily from the project or other item about which I am commenting (Puedo beneficar monetariamente por hecho de este proyecto u otro asunto de cual estoy comentando)

How did you learn about this hearing? (¿Como se entero usted de esta audiencia?)
✓**Newspaper** (Periódico) __**Notice in the Mail** (Aviso por Correo) __**Yard Signs** (Letreros en Jardines)
__**Other** (Please explain) (Otro [Por favor de explicar])

Do you support the proposed project? (¿Apoya usted el proyecto propuesto?) __ **Yes** (Sí) ✓ **No** (No) Not as proposed __**Undecided** (No he decidido)

COMMENTS (COMENTARIOS): Traffic for area does not support plan; position expansion towards undeveloped land rather than developed property as cost advantage

Please make additional comments on the back. (Por favor de hacer sus comentarios adicionales atrás de esta forma.)

This comment form may be turned in tonight, mailed, or emailed by May 30, 2013 to the address below:
(Esta forma de comentario se puede regresar esta noche, por correo postal, o por correo electrónico antes del 30 de mayo de 2013 a:)

Director of Project Development
Texas Department of Transportation – Houston District
P.O. Box 1386
Houston, Texas 77251-1386
Email: hou-piowebmail@txdot.gov

COMMENT FORM
(FORMA DE COMENTARIO)

Public Hearing – US 59 (from Spur 10 to SH 99)
(Audiencia Pública – US 59 (desde Spur 10 hasta SH 99))

CSJ Nos. 0027-12-097, 0027-12-105, 0027-12-106, and 0027-12-114
May 16, 2013
(16 de mayo de 2013)

__**I am an Elected Official** (Soy Funcionario/a) **Position** (Posición):_____

Name and Mailing Address (Optional) (Nombre y Dirección [Opcional]):
Name (Nombre) Kay Carlin
Address (Dirección) 6011 Biltmore Ct. Rosenberg Tx. 77471
Email Address (Dirección de Correo Electrónico) kdaport@earthlink.net
Telephone (Teléfono) 281·460·0071

PLEASE CHECK THE APPROPRIATE ITEMS BELOW: (POR FAVOR COMPREBRE LOS ARTÍCULOS SIGUIENTES QUE SEAN APROPIADOS)

I am primarily interested in the project from the standpoint of a: (Estoy interesado en el proyecto del punto de vista de:)
__**Residential property owner or renter** (Propietario o inquilino residencial) ✓**Business property owner or lessee** (Propietario o inquilino del negocio)
✓**Other (Please explain)** (Otro [Por favor de explicar]) Employee of OCaSOFT, Inc
30444 Southwest Fwy Rosenberg Tx 77471

Per Texas Transportation Code, §201.811(a)(5): check each of the following boxes that apply to you: (Por Código de Transportación de Tejas, §201.811(a)(5): apunte todo que aplique:)
__I am employed by TxDOT (Soy empleado de TxDOT)
__I do business with TxDOT (Tengo oficio con TxDOT)
__I could benefit monetarily from the project or other item about which I am commenting (Puedo beneficar monetariamente por hecho de este proyecto u otro asunto de cual estoy comentando)

How did you learn about this hearing? (¿Como se entero usted de esta audiencia?)
✓**Newspaper** (Periódico) __**Notice in the Mail** (Aviso por Correo) __**Yard Signs** (Letreros en Jardines)
__**Other** (Please explain) (Otro [Por favor de explicar])

Do you support the proposed project? (¿Apoya usted el proyecto propuesto?) ___ **Yes** (Sí) ✓ **No** (No) ___**Undecided** (No he decidido)

COMMENTS (COMENTARIOS):
- unsupported traffic for the proposed 5 lanes, I would recommend that the Kroesch exit be delayed until traffic prompts the new access. Recommend using the green space between the highway.
- Concerned about our personal + company security, safety, + the noise / vibrations that will affect our business.
- Additional land is available + already has commercial gas/Retail business ~~[illegible]~~, available @ 529 Spur + Cottonwood.

Please make additional comments on the back. (Por favor de hacer sus comentarios adicionales atrás de esta forma.)

This comment form may be turned in tonight, mailed, or emailed by May 30, 2013 to the address below:
(Esta forma de comentario se puede regresar esta noche, por correo postal, o por correo electrónico antes del 30 de mayo de 2013 a:)

Director of Project Development
Texas Department of Transportation – Houston District
P.O. Box 1386
Houston, Texas 77251-1386
Email: hou-piowebmail@txdot.gov

COMMENT FORM
(FORMA DE COMENTARIO)

Public Hearing – US 59 (from Spur 10 to SH 99)
(Audiencia Pública – US 59 (desde Spur 10 hasta SH 99))

CSJ Nos. 0027-12-097, 0027-12-105, 0027-12-106, and 0027-12-114
May 16, 2013
(16 de mayo de 2013)

__**I am an Elected Official** (Soy Funcionario/a) **Position** (Posición):_____

Name and Mailing Address (Optional) (Nombre y Dirección [Opcional]):
Name (Nombre) MARY HARRIS
Address (Dirección) 1003 LILY LANE ROSHARON, TX 77583
Email Address (Dirección de Correo Electrónico) Grimlin41@YAHOO.COM
Telephone (Teléfono) 757-618-1473
WORK - 30444 SW FREEWAY, ROSENBERG, TX 77471

PLEASE CHECK THE APPROPRIATE ITEMS BELOW: (POR FAVOR COMPREBRE LOS ARTÍCULOS SIGUIENTES QUE SEAN APROPIADOS)

I am primarily interested in the project from the standpoint of a: (Estoy interesado en el proyecto del punto de vista de:)
__**Residential property owner or renter** (Propietario o inquilino residencial) __**Business property owner or lessee** (Propietario o inquilino del negocio)
✓**Other (Please explain)** (Otro [Por favor de explicar]) Employee of Ocusoft 30444 South West Freeway Rosenberg, TX 77471

Per Texas Transportation Code, §201.811(a)(5): check each of the following boxes that apply to you: (Por Código de Transportación de Tejas, §201.811(a)(5): apunte todo que aplique:)
__I am employed by TxDOT (Soy empleado de TxDOT)
__I do business with TxDOT (Tengo oficio con TxDOT)
__I could benefit monetarily from the project or other item about which I am commenting (Puedo beneficar monetariamente por hecho de este proyecto u otro asunto de cual estoy comentando)

How did you learn about this hearing? (¿Como se entero usted de esta audiencia?)

✓**Newspaper** (Periódico) __**Notice in the Mail** (Aviso por Correo) __**Yard Signs** (Letreros en Jardines)
__**Other** (Please explain) (Otro [Por favor de explicar]) _____

Do you support the proposed project? (¿Apoya usted el proyecto propuesto?) ___ **Yes** (Sí) ✓ **No** (No) ___ **Undecided** (No he decidido)

COMMENTS (COMMENTARIOS): I am unsupportive due to traffic & safety.

Please make additional comments on the back. (Por favor de hacer sus comentarios adicionales atrás de esta forma.)

This comment form may be turned in tonight, mailed, or emailed by May 30, 2013 to the address below:
(Esta forma de comentario se puede regresar esta noche, por correo postal, o por correo electrónico antes del 30 de mayo de 2013 a:)

Director of Project Development
Texas Department of Transportation – Houston District
P.O. Box 1386
Houston, Texas 77251-1386
Email: hou-piowebmail@txdot.gov

COMMENT FORM
(FORMA DE COMENTARIO)

Public Hearing – US 59 (from Spur 10 to SH 99)
(Audiencia Pública – US 59 (desde Spur 10 hasta SH 99))

CSJ Nos. 0027-12-097, 0027-12-105, 0027-12-106, and 0027-12-114
May 16, 2013
(16 de mayo de 2013)

__**I am an Elected Official** (Soy Funcionario/a) **Position** (Posición):_____

Name and Mailing Address (Optional) (Nombre y Dirección [Opcional]):
Name (Nombre) Colette Starr
Address (Dirección) 1502 Rain Barrel Ct. Richmond TX 77469
Email Address (Dirección de Correo Electrónico) Colette-Christine@yahoo.com
Telephone (Teléfono) 281-202-7840

PLEASE CHECK THE APPROPRIATE ITEMS BELOW: (POR FAVOR COMPREBRE LOS ARTÍCULOS SIGUIENTES QUE SEAN APROPIADOS)

I am primarily interested in the project from the standpoint of a: (Estoy interesado en el proyecto del punto de vista de:)
__**Residential property owner or renter** (Propietario o inquilino residencial) __**Business property owner or lessee** (Propietario o inquilino del negocio)
✓**Other (Please explain)** (Otro [Por favor de explicar]) Employee of CCuSOFT. 30444 Southwest Freeway Rosenberg TX 77471

Per Texas Transportation Code, §201.811(a)(5): check each of the following boxes that apply to you: (Por Código de Transportación de Tejas, §201.811(a)(5): apunte todo que aplique:)
__I am employed by TxDOT (Soy empleado de TxDOT)
__I do business with TxDOT (Tengo oficio con TxDOT)
__I could benefit monetarily from the project or other item about which I am commenting (Puedo beneficar monetariamente por hecho de este proyecto u otro asunto de cual estoy comentando)

How did you learn about this hearing? (¿Como se entero usted de esta audiencia?)
✓**Newspaper** (Periódico) __**Notice in the Mail** (Aviso por Correo) __**Yard Signs** (Letreros en Jardines)
__**Other** (Please explain) (Otro [Por favor de explicar])

Do you support the proposed project? (¿Apoya usted el proyecto propuesto?) ___ **Yes** (Sí) ✓ **No** (No) ___**Undecided** (No he decidido)

COMMENTS (COMENTARIOS): unsupported traffic and safety concerns.

Please make additional comments on the back. (Por favor de hacer sus comentarios adicionales atrás de esta forma.)

This comment form may be turned in tonight, mailed, or emailed by May 30, 2013 to the address below:
(Esta forma de comentario se puede regresar esta noche, por correo postal, o por correo electrónico antes del 30 de mayo de 2013 a:)

Director of Project Development
Texas Department of Transportation – Houston District
P.O. Box 1386
Houston, Texas 77251-1386
Email: hou-piowebmail@txdot.gov

COMMENT FORM
(FORMA DE COMENTARIO)

Public Hearing – US 59 (from Spur 10 to SH 99)
(Audiencia Pública – US 59 (desde Spur 10 hasta SH 99))

CSJ Nos. 0027-12-097, 0027-12-105, 0027-12-106, and 0027-12-114
May 16, 2013
(16 de mayo de 2013)

__**I am an Elected Official** (Soy Funcionario/a) **Position** (Posición):_____

Name and Mailing Address (Optional) (Nombre y Dirección [Opcional]):
Name (Nombre) STACY FOSTER - Ocusoft
Address (Dirección) 30444 SW FREEWAY
Email Address (Dirección de Correo Electrónico) stacyfxtx@verizon.net
Telephone (Teléfono) 830-220-1675

PLEASE CHECK THE APPROPRIATE ITEMS BELOW: (POR FAVOR COMPREBRE LOS ARTÍCULOS SIGUIENTES QUE SEAN APROPIADOS)

I am primarily interested in the project from the standpoint of a: (Estoy interesado en el proyecto del punto de vista de:)
__**Residential property owner or renter** (Propietario o inquilino residencial)
✓**Business property owner or lessee** (Propietario o inquilino del negocio)

__**Other (Please explain)** (Otro [Por favor de explicar]) _____

Per Texas Transportation Code, §201.811(a)(5): check each of the following boxes that apply to you: (Por Código de Transportación de Tejas, §201.811(a)(5): apunte todo que aplique:)
__I am employed by TxDOT (Soy empleado de TxDOT)
__I do business with TxDOT (Tengo oficio con TxDOT)
__I could benefit monetarily from the project or other item about which I am commenting (Puedo beneficar monetariamente por hecho de este proyecto u otro asunto de cual estoy comentando)

How did you learn about this hearing? (¿Como se entero usted de esta audiencia?)
✓**Newspaper** (Periódico) __**Notice in the Mail** (Aviso por Correo) __**Yard Signs** (Letreros en Jardines)
__**Other** (Please explain) (Otro [Por favor de explicar]) _____

Do you support the proposed project? (¿Apoya usted el proyecto propuesto?) ___ **Yes** (Sí) X **No** (No) ___**Undecided** (No he decidido)
NOT AS PROPOSED

COMMENTS (COMENTARIOS): I HAVE VERY STRONG CONCERNS WITH THIS PROJECT AS PROPOSED FOR THE FOLLOWING REASONS:
THE TRAFFIC FLOW IN FRONT OF 30444 S.W. FRWY WOULD INCREASE VERY SIGNIFICANTLY AS THE SOUTHBOUND EXIT WOULD BRING ALL TRAFFIC EXITING FOR KROESCHE RD SPUR 529, AND COTTONWOOD CHURCH ROAD.
THIS INCREASED TRAFFIC FLOW WILL INCREASE NOISE AND REDUCE SAFETY AT OUR FACILITY.
MOVING KROESCHE RD INTERSECTION SOUTH BY APPROX. 100 FT. WOULD HELP REDUCE NOISE AND TRAFFIC DISTURBANCE AND UNDEVELOPED LAND ON SOUTH SIDE OF HWY 59 WOULD COST LESS THAN BUYING DEVELOPED LAND ON OUR PROPERTY AS PROPOSED.

Please make additional comments on the back. (Por favor de hacer sus comentarios adicionales atrás de esta forma.)

This comment form may be turned in tonight, mailed, or emailed by May 30, 2013 to the address below:
(Esta forma de comentario se puede regresar esta noche, por correo postal, o por correo electrónico antes del 30 de mayo de 2013 a:)

Director of Project Development
Texas Department of Transportation – Houston District
P.O. Box 1386
Houston, Texas 77251-1386
Email: hou-piowebmail@txdot.gov

COMMENT FORM
(FORMA DE COMENTARIO)

Public Hearing – US 59 (from Spur 10 to SH 99)
(Audiencia Pública – US 59 (desde Spur 10 hasta SH 99))

CSJ Nos. 0027-12-097, 0027-12-105, 0027-12-106, and 0027-12-114
May 16, 2013
(16 de mayo de 2013)

__**I am an Elected Official** (Soy Funcionario/a) **Position** (Posición):_____

Name and Mailing Address (Optional) (Nombre y Dirección [Opcional]):
Name (Nombre) PATRICK WARD
Address (Dirección) 4526 IVANHOE ST HOUSTON TX 77027
Email Address (Dirección de Correo Electrónico) patewards@mail.net
Telephone (Teléfono) (713) 627-2899

PLEASE CHECK THE APPROPRIATE ITEMS BELOW: (POR FAVOR COMPREBRE LOS ARTÍCULOS SIGUIENTES QUE SEAN APROPIADOS)

I am primarily interested in the project from the standpoint of a: (Estoy interesado en el proyecto del punto de vista de:)
__**Residential property owner or renter** (Propietario o inquilino residencial) __**Business property owner or lessee** (Propietario o inquilino del negocio) OuSoft
✓**Other (Please explain)** (Otro [Por favor de explicar]) Employee at 30444 SW Freeway

Per Texas Transportation Code, §201.811(a)(5): check each of the following boxes that apply to you: (Por Código de Transportación de Tejas, §201.811(a)(5): apunte todo que aplique:)
__I am employed by TxDOT (Soy empleado de TxDOT)
__I do business with TxDOT (Tengo oficio con TxDOT)
__I could benefit monetarily from the project or other item about which I am commenting (Puedo beneficar monetariamente por hecho de este proyecto u otro asunto de cual estoy comentando)

How did you learn about this hearing? (¿Como se entero usted de esta audiencia?)
✓**Newspaper** (Periódico) __**Notice in the Mail** (Aviso por Correo) __**Yard Signs** (Letreros en Jardines)
__**Other** (Please explain) (Otro [Por favor de explicar])

Do you support the proposed project? (¿Apoya usted el proyecto propuesto?) ___ **Yes** (Sí) ___ **No** (No) ___**Undecided** (No he decidido) ✓ Not as proposed

COMMENTS (COMENTARIOS): If median property cannot be used, it would seem to make more economic sense to purchase the undeveloped farm property on the south side of the freeway instead of the developed property on north side.

Please make additional comments on the back. (Por favor de hacer sus comentarios adicionales atrás de esta forma.)

This comment form may be turned in tonight, mailed, or emailed by May 30, 2013 to the address below:
(Esta forma de comentario se puede regresar esta noche, por correo postal, o por correo electrónico antes del 30 de mayo de 2013 a:)

Director of Project Development
Texas Department of Transportation – Houston District
P.O. Box 1386
Houston, Texas 77251-1386
Email: hou-piowebmail@txdot.gov

COMMENT FORM
(FORMA DE COMENTARIO)

Public Hearing – US 59 (from Spur 10 to SH 99)
(Audiencia Pública – US 59 (desde Spur 10 hasta SH 99))

CSJ Nos. 0027-12-097, 0027-12-105, 0027-12-106, and 0027-12-114
May 16, 2013
(16 de mayo de 2013)

__**I am an Elected Official** (Soy Funcionario/a) **Position** (Posición):_____

Name and Mailing Address (Optional) (Nombre y Dirección [Opcional]):
Name (Nombre) Jacque Burgess
Address (Dirección) 5319 Harris Wood Drive, Fulshear Tx 77441
Email Address (Dirección de Correo Electrónico) burgess.jacque@yahoo.com
Telephone (Teléfono) 281.455.9855

PLEASE CHECK THE APPROPRIATE ITEMS BELOW: (POR FAVOR COMPREBRE LOS ARTÍCULOS SIGUIENTES QUE SEAN APROPIADOS)

I am primarily interested in the project from the standpoint of a: (Estoy interesado en el proyecto del punto de vista de:)
__**Residential property owner or renter** (Propietario o inquilino residencial) __**Business property owner or lessee** (Propietario o inquilino del negocio) Ocusoft
✓**Other (Please explain)** (Otro [Por favor de explicar]) Employee @ 30444 Southwest Freeway

Per Texas Transportation Code, §201.811(a)(5): check each of the following boxes that apply to you: (Por Código de Transportación de Tejas, §201.811(a)(5): apunte todo que aplique:)
__I am employed by TxDOT (Soy empleado de TxDOT)
__I do business with TxDOT (Tengo oficio con TxDOT)
__I could benefit monetarily from the project or other item about which I am commenting (Puedo beneficar monetariamente por hecho de este proyecto u otro asunto de cual estoy comentando)

How did you learn about this hearing? (¿Como se entero usted de esta audiencia?)
✓**Newspaper** (Periódico) __**Notice in the Mail** (Aviso por Correo) __**Yard Signs** (Letreros en Jardines)
__**Other** (Please explain) (Otro [Por favor de explicar])_____

Do you support the proposed project? (¿Apoya usted el proyecto propuesto?) ___ **Yes** (Sí) ✓ **No** (No) ___**Undecided** (No he decidido)

COMMENTS (COMENTARIOS): I would ask that the proposed route be moved 100 ft to the South. Proposed plan would come too close to our building. The traffic noise will be very disturbing. Working late + leaving after dark is a safety concern.

Please make additional comments on the back. (Por favor de hacer sus comentarios adicionales atrás de esta forma.)

This comment form may be turned in tonight, mailed, or emailed by May 30, 2013 to the address below:
(Esta forma de comentario se puede regresar esta noche, por correo postal, o por correo electrónico antes del 30 de mayo de 2013 a:)

Director of Project Development
Texas Department of Transportation – Houston District
P.O. Box 1386
Houston, Texas 77251-1386
Email: hou-piowebmail@txdot.gov

COMMENT FORM
(FORMA DE COMENTARIO)

Public Hearing – US 59 (from Spur 10 to SH 99)
(Audiencia Pública – US 59 (desde Spur 10 hasta SH 99))

CSJ Nos. 0027-12-097, 0027-12-105, 0027-12-106, and 0027-12-114
May 16, 2013
(16 de mayo de 2013)

__**I am an Elected Official** (Soy Funcionario/a) **Position** (Posición):_____

Name and Mailing Address (Optional) (Nombre y Dirección [Opcional]):
Name (Nombre) CHARLES HEWITT
Address (Dirección) 2311 JUNIPER HILLS RICHMOND, TX 77406
Email Address (Dirección de Correo Electrónico)_____
Telephone (Teléfono) 281-239-9811

PLEASE CHECK THE APPROPRIATE ITEMS BELOW: (POR FAVOR COMPREBRE LOS ARTÍCULOS SIGUIENTES QUE SEAN APROPIADOS)

I am primarily interested in the project from the standpoint of a: (Estoy interesado en el proyecto del punto de vista de:)
__**Residential property owner or renter** (Propietario o inquilino residencial) __**Business property owner or lessee** (Propietario o inquilino del negocio) OcuSoft
✓**Other (Please explain)** (Otro [Por favor de explicar]) EMPLOYEE AT 30444 SOUTHWEST FREEWAY

Per Texas Transportation Code, §201.811(a)(5): check each of the following boxes that apply to you: (Por Código de Transportación de Tejas, §201.811(a)(5): apunte todo que aplique:)
__I am employed by TxDOT (Soy empleado de TxDOT)
__I do business with TxDOT (Tengo oficio con TxDOT)
__I could benefit monetarily from the project or other item about which I am commenting (Puedo beneficar monetariamente por hecho de este proyecto u otro asunto de cual estoy comentando)

How did you learn about this hearing? (¿Como se entero usted de esta audiencia?)
✓**Newspaper** (Periódico) __**Notice in the Mail** (Aviso por Correo) __**Yard Signs** (Letreros en Jardines)
__**Other** (Please explain) (Otro [Por favor de explicar])_____

Do you support the proposed project? (¿Apoya usted el proyecto propuesto?) ___ **Yes** (Sí) ___ **No** (No) ___**Undecided** (No he decidido) NOT AS PRESENTED

COMMENTS (COMENTARIOS): THE ENCROACHMENT OF THE FEEDER STREET WILL NEGATIVELY AFFECT MY EMPLOYER. MOVING THE MAIN LANES AND FEEDER LANES SOUTH WOULD IMPROVE THE DRIVEABILITY OF U.S. 69 TO SMOOTH OUT THE CURVE AT SPUR 529. MOVEMENT SOUTH WOULD IMPROVE MY EMPLOYER'S ABILITY TO MAINTAIN SECURITY TO THE PROPERTY. THE FDA REGULATES ACCESS TO THE PROPERTY.

Please make additional comments on the back. (Por favor de hacer sus comentarios adicionales atrás de esta forma.)

This comment form may be turned in tonight, mailed, or emailed by May 30, 2013 to the address below:
(Esta forma de comentario se puede regresar esta noche, por correo postal, o por correo electrónico antes del 30 de mayo de 2013 a:)

Director of Project Development
Texas Department of Transportation – Houston District
P.O. Box 1386
Houston, Texas 77251-1386
Email: hou-piowebmail@txdot.gov

COMMENT FORM
(FORMA DE COMENTARIO)

Public Hearing – US 59 (from Spur 10 to SH 99)
(Audiencia Pública – US 59 (desde Spur 10 hasta SH 99))

CSJ Nos. 0027-12-097, 0027-12-105, 0027-12-106, and 0027-12-114
May 16, 2013
(16 de mayo de 2013)

__**I am an Elected Official** (Soy Funcionario/a) **Position** (Posición):_____

Name and Mailing Address (Optional) (Nombre y Dirección [Opcional]):
Name (Nombre) Diana Montoya
Address (Dirección) 1111 Aurelia Dr. Rosen. TX || WORK at: 30444 S.W Freeway Rosen. TX. 77471
Email Address (Dirección de Correo Electrónico)_____
Telephone (Teléfono)_____

PLEASE CHECK THE APPROPRIATE ITEMS BELOW: (POR FAVOR COMPREBRE LOS ARTÍCULOS SIGUIENTES QUE SEAN APROPIADOS)

I am primarily interested in the project from the standpoint of a: (Estoy interesado en el proyecto del punto de vista de:)
__**Residential property owner or renter** (Propietario o inquilino residencial) __**Business property owner or lessee** (Propietario o inquilino del negocio)
__**Other (Please explain)** (Otro [Por favor de explicar]) Employee of Oxsoft 30444 SW Freeway, Rosenberg TX 77471

Per Texas Transportation Code, §201.811(a)(5): check each of the following boxes that apply to you: (Por Código de Transportación de Tejas, §201.811(a)(5): apunte todo que aplique:)
__I am employed by TxDOT (Soy empleado de TxDOT)
__I do business with TxDOT (Tengo oficio con TxDOT)
__I could benefit monetarily from the project or other item about which I am commenting (Puedo beneficar monetariamente por hecho de este proyecto u otro asunto de cual estoy comentando)

How did you learn about this hearing? (¿Como se entero usted de esta audiencia?)

__**Newspaper** (Periódico) __**Notice in the Mail** (Aviso por Correo) __**Yard Signs** (Letreros en Jardines)
__**Other** (Please explain) (Otro [Por favor de explicar])_____

Do you support the proposed project? (¿Apoya usted el proyecto propuesto?) ___ **Yes** (Sí) X **No** (No) ___**Undecided** (No he decidido)

COMMENTS (COMENTARIOS):

* Safty * take out Dead man curves
* Noise
* DPS Law enforncement Stop traffic
* turning lane in Frontage is Not Support by traffic in area.

Please make additional comments on the back. (Por favor de hacer sus comentarios adicionales atrás de esta forma.)

This comment form may be turned in tonight, mailed, or emailed by May 30, 2013 to the address below:
(Esta forma de comentario se puede regresar esta noche, por correo postal, o por correo electrónico antes del 30 de mayo de 2013 a:)

Director of Project Development
Texas Department of Transportation – Houston District
P.O. Box 1386
Houston, Texas 77251-1386
Email: hou-piowebmail@txdot.gov

COMMENT FORM
(FORMA DE COMENTARIO)

Public Hearing – US 59 (from Spur 10 to SH 99)
(Audiencia Pública – US 59 (desde Spur 10 hasta SH 99))

CSJ Nos. 0027-12-097, 0027-12-105, 0027-12-106, and 0027-12-114
May 16, 2013
(16 de mayo de 2013)

__**I am an Elected Official** (Soy Funcionario/a) **Position** (Posición):_____

Name and Mailing Address (Optional) (Nombre y Dirección [Opcional]):
Name (Nombre) Dorthy A. Eakins
Address (Dirección) 14026 Oak Lake Village Dr Needville, TX work at 30444 S.W. Fwy Rosenberg 77471
Email Address (Dirección de Correo Electrónico) deakins@ocusoft.com
Telephone (Teléfono) 281-239-9817

PLEASE CHECK THE APPROPRIATE ITEMS BELOW: (POR FAVOR COMPREBRE LOS ARTÍCULOS SIGUIENTES QUE SEAN APROPIADOS)

I am primarily interested in the project from the standpoint of a: (Estoy interesado en el proyecto del punto de vista de:)
__**Residential property owner or renter** (Propietario o inquilino residencial) __**Business property owner or lessee** (Propietario o inquilino del negocio)

✓**Other (Please explain)** (Otro [Por favor de explicar]) work at Ocusoft, Inc 30444 SW Freeway, Rosenberg

Per Texas Transportation Code, §201.811(a)(5): check each of the following boxes that apply to you: (Por Código de Transportación de Tejas, §201.811(a)(5): apunte todo que aplique:)
__I am employed by TxDOT (Soy empleado de TxDOT)
__I do business with TxDOT (Tengo oficio con TxDOT)
__I could benefit monetarily from the project or other item about which I am commenting (Puedo beneficar monetariamente por hecho de este proyecto u otro asunto de cual estoy comentando)

How did you learn about this hearing? (¿Como se entero usted de esta audiencia?)
✓**Newspaper** (Periódico) __**Notice in the Mail** (Aviso por Correo) __**Yard Signs** (Letreros en Jardines)
✓**Other** (Please explain) (Otro [Por favor de explicar]) got a notice

Do you support the proposed project? (¿Apoya usted el proyecto propuesto?) ___ **Yes** (Sí) ✓ **No** (No) as planned ___**Undecided** (No he decidido)

COMMENTS (COMENTARIOS): ① DPS + Local law enforcement stop people out in front of us daily ② plenty of farm land for sale across fwy ③ exit for cottonwood Church rd - truck stop - will be forced in front of us - high traffic - ④ turning lanes at Kroesche (5) is overkill for the amount of traffic ⑤ there was an 18 wheeler wreck last week between Ocusoft + Sintec, if the feeder street is placed where proposed it would have hit our building at my office window. ⑥ the noise will be disruptive ⑦ the vibration of traffic that close will eventually cause damage to the building ⑧ since West Ft Bend Assoc

Please make additional comments on the back. (Por favor de hacer sus comentarios adicionales atrás de esta forma.)
wouldn't let us put a fence around our parking lot, it will be less secure for our employees going to their cars.

This comment form may be turned in tonight, mailed, or emailed by May 30, 2013 to the address below:
(Esta forma de comentario se puede regresar esta noche, por correo postal, o por correo electrónico antes del 30 de mayo de 2013 a:)

Director of Project Development
Texas Department of Transportation – Houston District
P.O. Box 1386
Houston, Texas 77251-1386
Email: hou-piowebmail@txdot.gov

COMMENT FORM
(FORMA DE COMENTARIO)

Public Hearing – US 59 (from Spur 10 to SH 99)
(Audiencia Pública – US 59 (desde Spur 10 hasta SH 99))

CSJ Nos. 0027-12-097, 0027-12-105, 0027-12-106, and 0027-12-114
May 16, 2013
(16 de mayo de 2013)

__**I am an Elected Official** (Soy Funcionario/a) **Position** (Posición):_____

Name and Mailing Address (Optional) (Nombre y Dirección [Opcional]):
Name (Nombre) Bonnie Ball
Address (Dirección) 2711 Country Place Richmond TX 77406 FT Bend County
Email Address (Dirección de Correo Electrónico) bkball@comcast.net
Telephone (Teléfono)_____

PLEASE CHECK THE APPROPRIATE ITEMS BELOW: (POR FAVOR COMPREBRE LOS ARTÍCULOS SIGUIENTES QUE SEAN APROPIADOS)

I am primarily interested in the project from the standpoint of a: (Estoy interesado en el proyecto del punto de vista de:)
__**Residential property owner or renter** (Propietario o inquilino residencial) __**Business property owner or lessee** (Propietario o inquilino del negocio)
✓ **Other (Please explain)** (Otro [Por favor de explicar]) Employee of Oceusoft
30999 SW Freeway, Rosenberg, TX 77471

Per Texas Transportation Code, §201.811(a)(5): check each of the following boxes that apply to you: (Por Código de Transportación de Tejas, §201.811(a)(5): apunte todo que aplique:)
__I am employed by TxDOT (Soy empleado de TxDOT)
__I do business with TxDOT (Tengo oficio con TxDOT)
__I could benefit monetarily from the project or other item about which I am commenting (Puedo beneficar monetariamente por hecho de este proyecto u otro asunto de cual estoy comentando)

How did you learn about this hearing? (¿Como se entero usted de esta audiencia?)

__**Newspaper** (Periódico) __**Notice in the Mail** (Aviso por Correo) __**Yard Signs** (Letreros en Jardines)
__**Other** (Please explain) (Otro [Por favor de explicar])_____

Do you support the proposed project? (¿Apoya usted el proyecto propuesto?) ___ **Yes** (Sí) X **No** (No) ___**Undecided** (No he decidido)

COMMENTS (COMENTARIOS): With the expansion it gives opportunities for safety issues to all employees. Having a major highway so close to a business increases risk of an accident impacting the building - Parking Lot and common areas. Having a major highway so close to a business increase both noise and air pollution. As a growing business we looked for property that we can grow on and taking property for expansion takes that opportunity away.

Please make additional comments on the back. (Por favor de hacer sus comentarios adicionales atrás de esta forma.)

This comment form may be turned in tonight, mailed, or emailed by May 30, 2013 to the address below:
(Esta forma de comentario se puede regresar esta noche, por correo postal, o por correo electrónico antes del 30 de mayo de 2013 a:)

Director of Project Development
Texas Department of Transportation – Houston District
P.O. Box 1386
Houston, Texas 77251-1386
Email: hou-piowebmail@txdot.gov

COMMENT FORM
(FORMA DE COMENTARIO)

Public Hearing – US 59 (from Spur 10 to SH 99)
(Audiencia Pública – US 59 (desde Spur 10 hasta SH 99))

CSJ Nos. 0027-12-097, 0027-12-105, 0027-12-106, and 0027-12-114
May 16, 2013
(16 de mayo de 2013)

__**I am an Elected Official** (Soy Funcionario/a) **Position** (Posición):_____

Name and Mailing Address (Optional) (Nombre y Dirección [Opcional]):
Name (Nombre) Marlene Anhaiser
Address (Dirección) 916 Victoria Dr
Email Address (Dirección de Correo Electrónico) manhaiser@ocusoft.com
Telephone (Teléfono) 281 232 3623

PLEASE CHECK THE APPROPRIATE ITEMS BELOW: (POR FAVOR COMPREBRE LOS ARTÍCULOS SIGUIENTES QUE SEAN APROPIADOS)

I am primarily interested in the project from the standpoint of a: (Estoy interesado en el proyecto del punto de vista de:)
__**Residential property owner or renter** (Propietario o inquilino residencial) X **Business property owner or lessee** (Propietario o inquilino del negocio)
X **Other (Please explain)** (Otro [Por favor de explicar]) Employee of Ocusoft 30444 SW Freeway, Rosenberg 77471

Per Texas Transportation Code, §201.811(a)(5): check each of the following boxes that apply to you: (Por Código de Transportación de Tejas, §201.811(a)(5): apunte todo que aplique:)
__I am employed by TxDOT (Soy empleado de TxDOT)
__I do business with TxDOT (Tengo oficio con TxDOT)
X I could benefit monetarily from the project or other item about which I am commenting (Puedo beneficar monetariamente por hecho de este proyecto u otro asunto de cual estoy comentando)

How did you learn about this hearing? (¿Como se entero usted de esta audiencia?)

__**Newspaper** (Periódico) __**Notice in the Mail** (Aviso por Correo) __**Yard Signs** (Letreros en Jardines)
X **Other** (Please explain) (Otro [Por favor de explicar])_____

Do you support the proposed project? (¿Apoya usted el proyecto propuesto?) ___ **Yes** (Sí) X **No** (No) ___**Undecided** (No he decidido)

COMMENTS (COMENTARIOS): Please move the project from using the business property of Ocusoft Inc to 100 yards down the freeway to property not owned by a business, less expensive for you.

Please make additional comments on the back. (Por favor de hacer sus comentarios adicionales atrás de esta forma.)

This comment form may be turned in tonight, mailed, or emailed by May 30, 2013 to the address below:
(Esta forma de comentario se puede regresar esta noche, por correo postal, o por correo electrónico antes del 30 de mayo de 2013 a:)

Director of Project Development
Texas Department of Transportation – Houston District
P.O. Box 1386
Houston, Texas 77251-1386
Email: hou-piowebmail@txdot.gov

COMMENT FORM
(FORMA DE COMENTARIO)

Public Hearing – US 59 (from Spur 10 to SH 99)
(Audiencia Pública – US 59 (desde Spur 10 hasta SH 99))

CSJ Nos. 0027-12-097, 0027-12-105, 0027-12-106, and 0027-12-114
May 16, 2013
(16 de mayo de 2013)

__**I am an Elected Official** (Soy Funcionario/a) **Position** (Posición):_____

Name and Mailing Address (Optional) (Nombre y Dirección [Opcional]):
Name (Nombre) Terrell Walker
Address (Dirección) 3101 Vista Dr #4101, Rosenberg, TX 77471
Email Address (Dirección de Correo Electrónico) LonghornTx7@yahoo.com
Telephone (Teléfono) 281-762-0432

PLEASE CHECK THE APPROPRIATE ITEMS BELOW: (POR FAVOR COMPREBRE LOS ARTÍCULOS SIGUIENTES QUE SEAN APROPIADOS)

I am primarily interested in the project from the standpoint of a: (Estoy interesado en el proyecto del punto de vista de:)
✓ **Residential property owner or renter** (Propietario o inquilino residencial) __**Business property owner or lessee** (Propietario o inquilino del negocio)
✓ **Other (Please explain)** (Otro [Por favor de explicar]) Employee of Ocwoft 3044 Sir Freeway, Rosenberg 77471

Per Texas Transportation Code, §201.811(a)(5): check each of the following boxes that apply to you: (Por Código de Transportación de Tejas, §201.811(a)(5): apunte todo que aplique:)
__I am employed by TxDOT (Soy empleado de TxDOT)
__I do business with TxDOT (Tengo oficio con TxDOT)
__I could benefit monetarily from the project or other item about which I am commenting (Puedo beneficar monetariamente por hecho de este proyecto u otro asunto de cual estoy comentando)

How did you learn about this hearing? (¿Como se entero usted de esta audiencia?)

__**Newspaper** (Periódico) __**Notice in the Mail** (Aviso por Correo) __**Yard Signs** (Letreros en Jardines)
✓ **Other** (Please explain) (Otro [Por favor de explicar]) employer

Do you support the proposed project? (¿Apoya usted el proyecto propuesto?) __**Yes** (Sí) ✓ **No** (No) __**Undecided** (No he decidido)

COMMENTS (COMENTARIOS): The project would create a difficult work environment at my employer's location.

Please make additional comments on the back. (Por favor de hacer sus comentarios adicionales atrás de esta forma.)

This comment form may be turned in tonight, mailed, or emailed by May 30, 2013 to the address below:
(Esta forma de comentario se puede regresar esta noche, por correo postal, o por correo electrónico antes del 30 de mayo de 2013 a:)

Director of Project Development
Texas Department of Transportation – Houston District
P.O. Box 1386
Houston, Texas 77251-1386
Email: hou-piowebmail@txdot.gov

COMMENT FORM
(FORMA DE COMENTARIO)

Public Hearing – US 59 (from Spur 10 to SH 99)
(Audiencia Pública – US 59 (desde Spur 10 hasta SH 99))

CSJ Nos. 0027-12-097, 0027-12-105, 0027-12-106, and 0027-12-114
May 16, 2013
(16 de mayo de 2013)

__**I am an Elected Official** (Soy Funcionario/a) **Position** (Posición):_____

Name and Mailing Address (Optional) (Nombre y Dirección [Opcional]):
Name (Nombre) Kathie Owen
Address (Dirección) 455 Richmond Place Drive Richmond, TX 77469
Email Address (Dirección de Correo Electrónico) kowen@ocusoft.com
Telephone (Teléfono) 281-248-6295

PLEASE CHECK THE APPROPRIATE ITEMS BELOW: (POR FAVOR COMPREBRE LOS ARTÍCULOS SIGUIENTES QUE SEAN APROPIADOS)

I am primarily interested in the project from the standpoint of a: (Estoy interesado en el proyecto del punto de vista de:)
__**Residential property owner or renter** (Propietario o inquilino residencial)
✓**Business property owner or lessee** (Propietario o inquilino del negocio)
✓**Other (Please explain)** (Otro [Por favor de explicar]) employment facility is affected

Per Texas Transportation Code, §201.811(a)(5): check each of the following boxes that apply to you: (Por Código de Transportación de Tejas, §201.811(a)(5): apunte todo que aplique:)
__I am employed by TxDOT (Soy empleado de TxDOT)
__I do business with TxDOT (Tengo oficio con TxDOT)
__I could benefit monetarily from the project or other item about which I am commenting (Puedo beneficar monetariamente por hecho de este proyecto u otro asunto de cual estoy comentando)

How did you learn about this hearing? (¿Como se entero usted de esta audiencia?)

__**Newspaper** (Periódico) __**Notice in the Mail** (Aviso por Correo) __**Yard Signs** (Letreros en Jardines)
✓**Other** (Please explain) (Otro [Por favor de explicar]) Staff

Do you support the proposed project? (¿Apoya usted el proyecto propuesto?) ✓**Yes** (Sí) ___ **No** (No) ___**Undecided** (No he decidido)

COMMENTS (COMENTARIOS): I support this project EXCEPT for the fact the plans are to destroy business property. This plan puts the frontage road right outside our front doors. Ocusoft 30444 Sly Freeway. This appears VERY dangerous and destructive. Not to mention freeway traffic will distract from our business purposes and jobs.

Please make additional comments on the back. (Por favor de hacer sus comentarios adicionales atrás de esta forma.)

This comment form may be turned in tonight, mailed, or emailed by May 30, 2013 to the address below:
(Esta forma de comentario se puede regresar esta noche, por correo postal, o por correo electrónico antes del 30 de mayo de 2013 a:)

Director of Project Development
Texas Department of Transportation – Houston District
P.O. Box 1386
Houston, Texas 77251-1386
Email: hou-piowebmail@txdot.gov

COMMENT FORM
(FORMA DE COMENTARIO)

Public Hearing – US 59 (from Spur 10 to SH 99)
(Audiencia Pública – US 59 (desde Spur 10 hasta SH 99))

CSJ Nos. 0027-12-097, 0027-12-105, 0027-12-106, and 0027-12-114
May 16, 2013
(16 de mayo de 2013)

__**I am an Elected Official** (Soy Funcionario/a) **Position** (Posición):_____

Name and Mailing Address (Optional) (Nombre y Dirección [Opcional]):
Name (Nombre) BERNARD T. HALLORAN
Address (Dirección) 13318 ALCHESTER LN. HOUSTON TX 77079
Email Address (Dirección de Correo Electrónico) BTHALLORAN@SBCGLOBAL.NET
Telephone (Teléfono) (713) 780-0513; (713) 468-3957

PLEASE CHECK THE APPROPRIATE ITEMS BELOW: (POR FAVOR COMPREBRE LOS ARTÍCULOS SIGUIENTES QUE SEAN APROPIADOS)

I am primarily interested in the project from the standpoint of a: (Estoy interesado en el proyecto del punto de vista de:)
__**Residential property owner or renter** (Propietario o inquilino residencial)
X **Business property owner or lessee** (Propietario o inquilino del negocio)

__**Other (Please explain)** (Otro [Por favor de explicar]) _____

Per Texas Transportation Code, §201.811(a)(5): check each of the following boxes that apply to you: (Por Código de Transportación de Tejas, §201.811(a)(5): apunte todo que aplique:)
__I am employed by TxDOT (Soy empleado de TxDOT)
__I do business with TxDOT (Tengo oficio con TxDOT)
__I could benefit monetarily from the project or other item about which I am commenting (Puedo beneficar monetariamente por hecho de este proyecto u otro asunto de cual estoy comentando)

How did you learn about this hearing? (¿Como se entero usted de esta audiencia?)

__**Newspaper** (Periódico) X **Notice in the Mail** (Aviso por Correo) __**Yard Signs** (Letreros en Jardines)
__**Other** (Please explain) (Otro [Por favor de explicar]) _____

Do you support the proposed project? (¿Apoya usted el proyecto propuesto?) ___ **Yes** (Sí) X **No** (No) ___**Undecided** (No he decidido)

COMMENTS (COMENTARIOS): THIS IS TO PROTEST THE AMOUNT OF LAND TO BE TAKEN FROM THE FRONT OF OCUSOFT INC. AT 30444 SOUTHWEST FRWY, ROSENBERG, TX 77471. BASED UPON THE DOT PROPOSAL, THERE WILL BE TWO SAFETY ISSUES. FIRST, BECAUSE FENCES ARE PROHIBITED, THE DANGER TO OCUSOFT EMPLOYEES AND THEIR VEHICLES WILL BE SIGNIFICANTLY INCREASED BY THE PROXIMITY OF THE PROPOSED FEEDER ROAD. SECOND, IS THE INCREASED LIKELIHOOD THAT THE BUILDING ITSELF, WITH ITS EMPLOYEE-OCCUPANTS, WILL BE AT RISK FROM SUCH TRAFFIC. ALSO, THE NOISE AND VIBRATION OF THE CLOSER TRAFFIC WILL BE A DISTRACTION TO AND DISCOMFORT FOR THE

Please make additional comments on the back. (Por favor de hacer sus comentarios adicionales atrás de esta forma.)

This comment form may be turned in tonight, mailed, or emailed by May 30, 2013 to the address below:
(Esta forma de comentario se puede regresar esta noche, por correo postal, o por correo electrónico antes del 30 de mayo de 2013 a:)

Director of Project Development
Texas Department of Transportation – Houston District
P.O. Box 1386
Houston, Texas 77251-1386
Email: hou-piowebmail@txdot.gov

130 EMPLOYEE-OCCUPANTS OF THE OCUSOFT BUILDING. THE PROPOSED CHANGES ARE UNNECESSARY. THERE IS NO OFF RAMP AT KROESCHE ROAD AND NONE IS NEEDED; IT WOULD BE BENEFICIAL TO ALL CONCERNED FOR THE PROPOSED RAMP TO BE SHIFTED CLOSER TO COTTONWOOD CHURCH ROAD. THERE IS ALSO A QUESTION OF ECONOMY. TO THE EXTENT THE RIGHT-OF-WAY CAN BE TO THE EAST ON TO FARMLAND RATHER THAN TO THE WEST ON TO OCUSOFT'S DEVELOPED PROPERTY, IT WILL SAVE DOT FUNDS.

THANK YOU FOR CONSIDERING OUR VIEW.

Director of Project Development
Texas Department of Transportation – Houston District
P.O. Box 1386
Houston, Texas 77251-1386

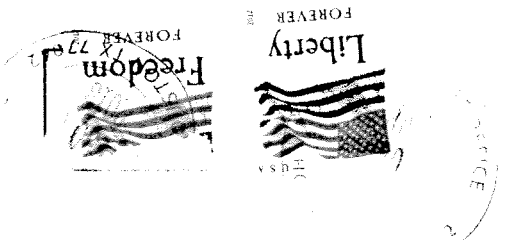

Director of Project Development
Texas Department of Transportation – Houston District
P.O. Box 1386
Houston, Texas 77251-1386

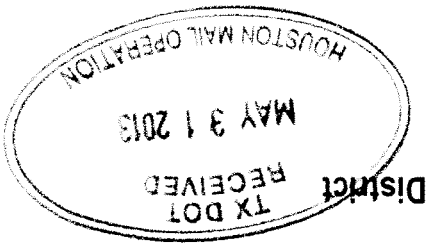

J.L. (CSJ Nos. 0027-12-097, 0027-12-105, 0027-12-106, and 0027-12-114)

77251138686

COMMENT FORM
(FORMA DE COMENTARIO)

Public Hearing – US 59 (from Spur 10 to SH 99)
(Audiencia Pública – US 59 (desde Spur 10 hasta SH 99))

CSJ Nos. 0027-12-097, 0027-12-105, 0027-12-106, and 0027-12-114
May 16, 2013
(16 de mayo de 2013)

__**I am an Elected Official** (Soy Funcionario/a) **Position** (Posición):_____

Name and Mailing Address (Optional) (Nombre y Dirección [Opcional]):
Name (Nombre) Mario Delgollado, Jr
Address (Dirección) 3012 Richmond St. · Needville, Tx 77461
Email Address (Dirección de Correo Electrónico) mr delgolladojr @ gmail.com
Telephone (Teléfono) 832-439-5459

PLEASE CHECK THE APPROPRIATE ITEMS BELOW: (POR FAVOR COMPREBRE LOS ARTÍCULOS SIGUIENTES QUE SEAN APROPIADOS)

I am primarily interested in the project from the standpoint of a: (Estoy interesado en el proyecto del punto de vista de:)
✓ **Residential property owner or renter** (Propietario o inquilino residencial) ✓ **Business property owner or lessee** (Propietario o inquilino del negocio)

__**Other (Please explain)** (Otro [Por favor de explicar]) _____

Per Texas Transportation Code, §201.811(a)(5): check each of the following boxes that apply to you: (Por Código de Transportación de Tejas, §201.811(a)(5): apunte todo que aplique:)
__I am employed by TxDOT (Soy empleado de TxDOT)
__I do business with TxDOT (Tengo oficio con TxDOT)
✓ I could benefit monetarily from the project or other item about which I am commenting (Puedo beneficar monetariamente por hecho de este proyecto u otro asunto de cual estoy comentando)

How did you learn about this hearing? (¿Como se entero usted de esta audiencia?)

__**Newspaper** (Periódico) ✓ **Notice in the Mail** (Aviso por Correo) __**Yard Signs** (Letreros en Jardines)
__**Other** (Please explain) (Otro [Por favor de explicar]) _____

Do you support the proposed project? (¿Apoya usted el proyecto propuesto?) ✓ **Yes** (Sí) __ **No** (No) __**Undecided** (No he decidido)

COMMENTS (COMENTARIOS): I feel that it bring more business to the area. More employment opp. to those living in the community

Mario Delgollado, Jr. TJC SGA Region III
2012-2013 President

Please make additional comments on the back. (Por favor de hacer sus comentarios adicionales atrás de esta forma.)

This comment form may be turned in tonight, mailed, or emailed by May 30, 2013 to the address below:
(Esta forma de comentario se puede regresar esta noche, por correo postal, o por correo electrónico antes del 30 de mayo de 2013 a:)

Director of Project Development
Texas Department of Transportation – Houston District
P.O. Box 1386
Houston, Texas 77251-1386
Email: hou-piowebmail@txdot.gov

COMMENT FORM
(FORMA DE COMENTARIO)

Public Hearing – US 59 (from Spur 10 to SH 99)
(Audiencia Pública – US 59 (desde Spur 10 hasta SH 99))

CSJ Nos. 0027-12-097, 0027-12-105, 0027-12-106, and 0027-12-114
May 16, 2013
(16 de mayo de 2013)

__**I am an Elected Official** (Soy Funcionario/a) **Position** (Posición):_____

Name and Mailing Address (Optional) (Nombre y Dirección [Opcional]):
Name (Nombre) Diana Dobbs, MS.
Address (Dirección) 4424 Pecan Creek
Email Address (Dirección de Correo Electrónico) Diana.Dobbs@gmail.com
Telephone (Teléfono)_____

PLEASE CHECK THE APPROPRIATE ITEMS BELOW: (POR FAVOR COMPREBRE LOS ARTÍCULOS SIGUIENTES QUE SEAN APROPIADOS)

I am primarily interested in the project from the standpoint of a: (Estoy interesado en el proyecto del punto de vista de:)
X **Residential property owner or renter** (Propietario o inquilino residencial) __**Business property owner or lessee** (Propietario o inquilino del negocio)

__**Other (Please explain)** (Otro [Por favor de explicar])_____

Per Texas Transportation Code, §201.811(a)(5): check each of the following boxes that apply to you: (Por Código de Transportación de Tejas, §201.811(a)(5): apunte todo que aplique:)
__I am employed by TxDOT (Soy empleado de TxDOT)
__I do business with TxDOT (Tengo oficio con TxDOT)
__I could benefit monetarily from the project or other item about which I am commenting (Puedo beneficar monetariamente por hecho de este proyecto u otro asunto de cual estoy comentando)

How did you learn about this hearing? (¿Como se entero usted de esta audiencia?)
X **Newspaper** (Periódico) __**Notice in the Mail** (Aviso por Correo) __**Yard Signs** (Letreros en Jardines)
__**Other** (Please explain) (Otro [Por favor de explicar])_____

Do you support the proposed project? (¿Apoya usted el proyecto propuesto?) ___ **Yes** (Sí) ___ **No** (No) ___**Undecided** (No he decidido)

COMMENTS (COMENTARIOS): On the Spur 10 Bridge - Why are the plans to add the overpass to the cross over road instead of the freeway? By extending the existing cross over you save a new box in the long run hem in the freeway from further expansion with the boundary of the fly over. Why not take the time now when traffic conditions do not depend on the length of the change to flip the intersection in preperation for future expansion

Please make additional comments on the back. (Por favor de hacer sus comentarios adicionales atrás de esta forma.)

This comment form may be turned in tonight, mailed, or emailed by May 30, 2013 to the address below:
(Esta forma de comentario se puede regresar esta noche, por correo postal, o por correo electrónico antes del 30 de mayo de 2013 a:)

Director of Project Development
Texas Department of Transportation – Houston District
P.O. Box 1386
Houston, Texas 77251-1386
Email: hou-piowebmail@txdot.gov

COMMENT FORM
(FORMA DE COMENTARIO)

Public Hearing – US 59 (from Spur 10 to SH 99)
(Audiencia Pública – US 59 (desde Spur 10 hasta SH 99))

CSJ Nos. 0027-12-097, 0027-12-105, 0027-12-106, and 0027-12-114
May 16, 2013
(16 de mayo de 2013)

__**I am an Elected Official** (Soy Funcionario/a) **Position** (Posición):_____

Name and Mailing Address (Optional) (Nombre y Dirección [Opcional]):
Name (Nombre) Greg Andrus
Address (Dirección) 6319 Fisher Bend Rosenburg tx.
Email Address (Dirección de Correo Electrónico)_____
Telephone (Teléfono)_____

PLEASE CHECK THE APPROPRIATE ITEMS BELOW: (POR FAVOR COMPREBRE LOS ARTÍCULOS SIGUIENTES QUE SEAN APROPIADOS)

I am primarily interested in the project from the standpoint of a: (Estoy interesado en el proyecto del punto de vista de:)
__**Residential property owner or renter** (Propietario o inquilino residencial) __**Business property owner or lessee** (Propietario o inquilino del negocio)

__**Other (Please explain)** (Otro [Por favor de explicar]) _____

Per Texas Transportation Code, §201.811(a)(5): check each of the following boxes that apply to you: (Por Código de Transportación de Tejas, §201.811(a)(5): apunte todo que aplique:)
__I am employed by TxDOT (Soy empleado de TxDOT)
__I do business with TxDOT (Tengo oficio con TxDOT)
__I could benefit monetarily from the project or other item about which I am commenting (Puedo beneficar monetariamente por hecho de este proyecto u otro asunto de cual estoy comentando)

How did you learn about this hearing? (¿Como se entero usted de esta audiencia?)

__**Newspaper** (Periódico) __**Notice in the Mail** (Aviso por Correo) __**Yard Signs** (Letreros en Jardines)
__**Other** (Please explain) (Otro [Por favor de explicar]) _____

Do you support the proposed project? (¿Apoya usted el proyecto propuesto?) __✓__ **Yes** (Sí) ___ **No** (No) ___**Undecided** (No he decidido)

COMMENTS (COMENTARIOS): _____

Please make additional comments on the back. (Por favor de hacer sus comentarios adicionales atrás de esta forma.)

This comment form may be turned in tonight, mailed, or emailed by May 30, 2013 to the address below:
(Esta forma de comentario se puede regresar esta noche, por correo postal, o por correo electrónico antes del 30 de mayo de 2013 a:)

Director of Project Development
Texas Department of Transportation – Houston District
P.O. Box 1386
Houston, Texas 77251-1386
Email: hou-piowebmail@txdot.gov

COMMENT FORM
(FORMA DE COMENTARIO)

Public Hearing – US 59 (from Spur 10 to SH 99)
(Audiencia Pública – US 59 (desde Spur 10 hasta SH 99))

CSJ Nos. 0027-12-097, 0027-12-105, 0027-12-106, and 0027-12-114
May 16, 2013
(16 de mayo de 2013)

__**I am an Elected Official** (Soy Funcionario/a) **Position** (Posición):_____

Name and Mailing Address (Optional) (Nombre y Dirección [Opcional]):
Name (Nombre) Richard Fields
Address (Dirección) 12999 Jess Pirtle Blvd
Email Address (Dirección de Correo Electrónico) richard.fields@aguirre-fields.com
Telephone (Teléfono) 281-207-2070

PLEASE CHECK THE APPROPRIATE ITEMS BELOW: (POR FAVOR COMPREBRE LOS ARTÍCULOS SIGUIENTES QUE SEAN APROPIADOS)

I am primarily interested in the project from the standpoint of a: (Estoy interesado en el proyecto del punto de vista de:)
__**Residential property owner or renter** (Propietario o inquilino residencial) __**Business property owner or lessee** (Propietario o inquilino del negocio)

X**Other (Please explain)** (Otro [Por favor de explicar]) user who travels on facility often and interested in general mobility. Also I represent Highway 36A Coalition

Per Texas Transportation Code, §201.811(a)(5): check each of the following boxes that apply to you: (Por Código de Transportación de Tejas, §201.811(a)(5): apunte todo que aplique:)
__I am employed by TxDOT (Soy empleado de TxDOT)
X I do business with TxDOT (Tengo oficio con TxDOT)
__I could benefit monetarily from the project or other item about which I am commenting (Puedo beneficar monetariamente por hecho de este proyecto u otro asunto de cual estoy comentando)

How did you learn about this hearing? (¿Como se entero usted de esta audiencia?)

__**Newspaper** (Periódico) __**Notice in the Mail** (Aviso por Correo) __**Yard Signs** (Letreros en Jardines)
X**Other** (Please explain) (Otro [Por favor de explicar]) electronic notification

Do you support the proposed project? (¿Apoya usted el proyecto propuesto?) X **Yes** (Sí) ___ **No** (No) ___**Undecided** (No he decidido)

COMMENTS (COMENTARIOS): I represent the Highway 36A Coalition, ~~and~~ an ~~advocacy~~ organization advocating highway improvements along the SH 36 corridor from Spur 10 to Port Freeport, and north through Waller County to SH 6 north of Hempstead. We advocate effective planning for future traffic so public dollars can be used most efficiently. The entire US 59 corridor from Thompson Highway to Hillcroft inside the beltway has been designed for ~~for~~ four general purpose main lanes ~~and~~ in each direction and diamond lanes or high occupancy lanes in the median. After Examining the project schematic, our only concern is that →

Please make additional comments on the back. (Por favor de hacer sus comentarios adicionales atrás de esta forma.)

This comment form may be turned in tonight, mailed, or emailed by May 30, 2013 to the address below:
(Esta forma de comentario se puede regresar esta noche, por correo postal, o por correo electrónico antes del 30 de mayo de 2013 a:)

Director of Project Development
Texas Department of Transportation – Houston District
P.O. Box 1386
Houston, Texas 77251-1386
Email: hou-piowebmail@txdot.gov

in the next thirty years, traffic will increase sufficiently to require extending the four lanes in each direction. Where the transition occurs, we urge TxDOT to ensure the design is well-thought out, and that widening is inexpensive in the future and will not require new ROW or retaining wall construction. We are in support of the project. Further comments are that storage and merging lengths should be as generous as possible. Thank you.

Director of Project Development
Texas Department of Transportation – Houston District
P.O. Box 1386
Houston, Texas 77251-1386

Director of Project Development
Texas Department of Transportation – Houston District
P.O. Box 1386
Houston, Texas 77251-1386

J.L. (CSJ Nos. 0027-12-097, 0027-12-105, 0027-12-106, and 0027-12-114)

Appendix F: Public Meeting Photographs

TERRY RAN

RRY RANGERS

Appendix G: Public Hearing Transcript

	)	
U.S. HIGHWAY 59	)	
	)	
PUBLIC HEARING	)	MAY 16, 2013
	)	
PROPOSED IMPROVEMENTS	)	6:30 P.M.
	)	
FROM SPUR 10 TO	)	
	)	
STATE HIGHWAY 99	)	

REPORTED BY: TAMARA VINSON,

Registered Professional Reporter

1 MR. KOCH: Good evening. My name is
2 James Koch and I'm the Director of Transportation
3 Planning and Development for the Texas Department of
4 Transportation, Houston District. Today's date is May
5 16th, 2013, and the time is 6:30 p.m.
6 At this time, please turn off, or otherwise
7 silence, any personal electronic devices for the
8 remainder of this hearing.
9 On behalf of the Federal Highway
10 Administration and the Texas Department of
11 Transportation, I would like to thank you for your
12 interest and participation in this public hearing.
13 The purpose of this public hearing is to
14 present the proposed improvements along U.S. 59 from
15 Spur 10 south of Rosenberg to State Highway 99 (or the
16 Grand Parkway) in Fort Bend County and gather public
17 input, comments, and/or suggestions you may have
18 regarding the proposed project.
19 We should note that per Commission Minute
20 Order 113518, I-69 is designated on the state highway
21 system concurrent with U.S. 59 from I-610 West in
22 Houston to north of Spur 529 in Rosenberg. However,
23 we will be referring to it verbally as U.S. 59 during
24 this public hearing.
25 This public hearing is being recorded by a

1 certified court reporter for the formal public record.
2 You may have noticed sign-in tables as you
3 walked into the building this evening. If you have
4 not already done so, please sign in before you leave
5 tonight. The sign-in sheets allow us to record
6 tonight's participation. Also available at the
7 sign-in tables are handouts, which include project
8 information and comment forms for your use at
9 tonight's hearing. Speaker registration cards are
10 also provided at the sign-in table for those who wish
11 to make a verbal comment during the public comment
12 session night.
13 The public comment session will follow this
14 presentation. We will not answer questions during the
15 presentation or public comment session, but TxDOT
16 representatives and members of the consultant team
17 will be available to answer your questions following
18 the comment session. Please feel free to review the
19 exhibits on display tonight here in the cafeteria.
20 Please advise one of our staff members if you
21 have a need for Spanish translation of information
22 presented at tonight's hearing.
23 At this point, we would like to recognize the
24 elected officials that are in attendance tonight.
25 We had Mayor Vincent Morales. And I think I

1 saw him step out. He's gone. Okay.
2 We also had Commissioner Richard Morrison,
3 who also had to go to another engagement.
4 If there are other officials present tonight,
5 please raise your hand to be recognized.
6 Thank you.
7 Notices of this public hearing were
8 advertised in the Houston Chronicle, Fort Bend Herald
9 and Las Noticias de Fort Bend.
10 The project plans and environmental document
11 are available for review at TxDOT's District Office in
12 Houston, and the Fort Bend Area Office here in
13 Rosenberg. These exhibits are also available on
14 TxDOT's Website at the address shown.
15 I would like to introduce the people who will
16 be presenting the project information to you this
17 evening.
18 Mr. Manny Francisco of TxDOT's Houston
19 District Office will be presenting the project
20 description and design, followed by Ms. Amy Brook of
21 Berg Oliver Associates who will be presenting
22 information from the environmental studies that have
23 been conducted.
24 And now I would like to have Mr. Francisco
25 present the proposed construction project information

1 and design.
2 (Applause.)
3 MR. FRANCISCO: Thank you, Mr. Koch.
4 The proposed roadway improvement being
5 presented tonight would begin at Spur 10 just south of
6 Rosenberg and end at State Highway 99, the Grand
7 Parkway, in Fort Bend County, for a distance of
8 approximately 12 miles.
9 The project consists of widening U.S. 59 in
10 two phases.
11 The first phase will be from Spur 10 to FM
12 762. In this section, the proposed project would
13 widen the existing divided highway from a four-lane to
14 a six-lane freeway. The proposed improvements would
15 also include continuous two-lane frontage roads in
16 each direction. Three new grade separations would be
17 constructed at Cottonwood Church, Kroesche Road, and
18 Bamore Road with entrance and exit ramps.
19 The second phase is from FM 762 to State
20 Highway 99. In this section, the proposed
21 improvements would widen the existing divided highway
22 from four lanes to eight lanes with a concrete median
23 barrier and one additional HOV lane in each direction.
24 The proposed project would construct two- to
25 three-lane continuous frontage roads in each

1 direction.
2 The total proposed improvements for the two
3 phases are estimated to cost approximately 200 million
4 dollars.
5 Currently, U.S. 59 within the project limits
6 has four lanes separated by a wide grassy median and
7 noncontinuous frontage road within a usual
8 right-of-way width of 335 feet.
9 Upon completion of the first phase of the
10 project, the section of U.S. 59 between Spur 10 and FM
11 762 would be a six-lane rural freeway with depressed
12 grassy medians and 12-foot inside and outside
13 shoulders. All travel lanes would be 12 feet wide.
14 The proposed improvements would also include
15 continuous two lane frontage roads in each direction.
16 Frontage roads would be 24-feet wide with 12-foot
17 lanes and four-foot inside shoulder -- four -- and
18 eight-foot outside shoulders. All improvements would
19 be within the proposed right-of-way width of 335 to
20 440 feet.
21 The second phase of the project, the section
22 of U.S. 59 between FM 762 and State Highway 99 would
23 have eight lanes with a concrete median barrier and
24 one HOV lane in each direction. All travel lanes
25 would be 12-feet wide with four-foot inside and

12-foot outside shoulders. The proposed project would construct two-lane, three-lane -- two- to three-lane continuous frontage road in each direction. The proposed frontage roads would be 24 feet to 36 feet wide with 12-foot lanes and four-foot inside and outside shoulders. All improvements would be within the proposed right-of-way of 434 feet to 540 feet.

Other proposed improvements include: Upgrading existing intersections, providing eight-foot frontage road shoulders in order to accommodate bicyclists and providing pedestrian crossings at major intersections.

Project construction of Phase 1 is estimated to be begin in the spring of 2014 and to be completed by early 2017.

Phase 2 construction is anticipated to begin in the summer of 2014 and to be completed by winter of 2017.

This concludes the project information and design portion of the presentation.

Now I would like to turn the presentation over to Ms. Amy Brook of Berg Oliver Associates to review the environmental studies associated with this project.

MS. BROOK: Thank you, Mr. Francisco.

1 Good evening. My name is Amy Brook, and I am
2 also part of the consultant team for the proposed U.S.
3 59 widening project.
4 A draft environmental assessment has been
5 prepared and has received preliminary approval for
6 further processing from the Federal Highway
7 Administration in March of 2013, enabling us to hold
8 this public hearing. We have copies of the document
9 here this evening for your review at the comment
10 tables.
11 The environmental assessment document
12 discusses the proposed improvements and the need for
13 and the purpose of the proposed project. It documents
14 the alternatives that were considered and evaluates
15 the anticipated potential impacts from the proposed
16 project. It also documents coordination with the
17 public and the agencies during the preparation of the
18 EA.
19 The proposed U.S. 59 improvements need to be
20 implemented to address congestion and mobility. If
21 additional lanes are not added, the U.S. 59 and other
22 area roadways will become more congested, and mobility
23 in the corridor will decrease.
24 The project is also needed to bring the
25 highway up to current interstate design and safety

1 standards.
2 The purpose of the proposed project is to
3 improve overall driving conditions within the corridor
4 through standardization of the facility.
5 Improvements would include added capacity on
6 through-lanes, enhanced mobility on feeder and turn
7 lanes, increases in both the number of lanes and the
8 width of shoulders, and continuous frontage roads.
9 The proposed project would provide continuity
10 to the regional highway design and network.
11 A no-build alternative and a build
12 alternative were considered.
13 Under the no-build alternative, the U.S. 59
14 roadway between Spur 10 and State Highway 99 would
15 remain in operation, and only routine maintenance
16 would be conducted per TxDOT guidelines. The no-build
17 alternative does not satisfy the need for or purpose
18 of the proposed project.
19 The build alternative was developed to avoid
20 and/or minimize adverse impacts to the physical,
21 biological, and human environment. The build
22 alternative would add capacity to through-lanes,
23 reduce congestion, and upgrade U.S. 59 to current
24 interstate design and safety standards.
25 The environmental assessment documents the

1 potential impact of the proposed project.
2 Environmental considerations include the
3 environment and natural resources, some of which are
4 listed on this slide. Many of these resources,
5 including those shown in red here, did not have
6 notable impacts and are not discussed further.
7 I will briefly discuss the potential impacts
8 to the other listed resources.
9 The complete analysis can be found in the EA
10 document, available at the comments table, and at
11 TxDOT's District Office in Houston, the Fort Bend Area
12 office in Rosenberg, and at the TxDOT Website.
13 Most of the project construction would be
14 performed within existing right-of-way, in previously
15 disturbed areas. The proposed project would not
16 affect planned development of the project area.
17 The proposed project would require
18 approximately 55 acres of additional right-of-way, of
19 which 45 acres are undeveloped. The build alternative
20 would displace three commercial businesses and no
21 residences. The right-of-way requirements also
22 include acquisition of parking at five business
23 structures fronting U.S. 59 south of FM 762. And some
24 utilities, fences, and signs may also been impacted,
25 depending on final design.

1 A traffic noise analysis indicated that the
2 proposed project would result in traffic noise
3 impacts. Noise abatement measures were considered,
4 and noise barriers were evaluated for all impacted
5 receivers. For some, barriers would not meet the
6 Federal Highway Administration's criteria for
7 incorporation into the project.
8 Noise barriers met the criteria at one
9 location, a portion of the New Territory neighborhood
10 southwest of the intersection of U.S. 59 and State
11 Highway 99, and a preliminary noise wall that would
12 benefit an estimated 23 residences is proposed.
13 Noise impact contours, showing predicted
14 noise levels, were also developed so that future land
15 use along U.S. 59 could be planned in consideration of
16 predicted traffic noise.
17 The proposed project would cross several
18 bayous, streams, and tributaries. Based on the
19 schematic design, the proposed project could
20 potentially impact approximately .1 acre of the waters
21 of U.S., including wetlands. TxDOT would coordinate
22 with the U.S. Army Corps of Engineers to obtain any
23 permits.
24 The proposed project also crosses several
25 FEMA floodplains. Coordination with the local

1 floodplain administrators would be conducted regarding
2 any potential impacts to flood plains. Needs for
3 storm water detention to mitigate for increased
4 run-off from the roadway would be evaluated during
5 final design.
6 The proposed project would impact almost 160
7 acres of existing, mowed and maintained right-of-way,
8 approximately eight acres of woody vegetation, and
9 approximately 35 acres of crops, pasture, and
10 grassland vegetation.
11 From the regulatory database review, the
12 hazardous material analysis identified 20 sites that
13 pose potential environmental concerns due to close
14 proximity to the sites -- of the sites to the
15 right-of-way and/or construction activities associated
16 with the proposed project. Another 15 sites of
17 possible concern not listed on the database records
18 were observed during field reconnaissance. Sites
19 estimated to be of high or moderate risks would have
20 further investigation to determine the potential of
21 encountering hazardous materials during construction
22 of the project.
23 The primary indirect effects of the proposed
24 project would be the result of any potential induced
25 development. Potential induced development was

1 forecast by evaluating information gathered from area
2 planners, past and future development trends, and
3 plans developed by the Cities of Richmond and
4 Rosenberg. The proposed project could affect the
5 timing, location, and type of development that takes
6 place, if other factors affecting development do not
7 change.
8 For the cumulative impact assessment,
9 detailed analyses were performed for land use,
10 vegetation, water quality, and wetlands. These
11 analyses can be found in the EA document.
12 During the environmental process, TxDOT has
13 coordinated with many resource agencies and other
14 stakeholders, including the public. Some of these are
15 listed here on this slide.
16 What's next in the environmental process?
17 TxDOT will review the verbal and written
18 comments received at this public hearing and other
19 written comments received within the public comment
20 period which ends on May 30th, 2013.
21 A summary of the public hearing, including
22 comments and responses, will be submitted to the
23 Federal Highway Administration for review, as well as
24 any changes to the proposed project. A project
25 decision will be requested from the Federal Highway

1 Administration in early summer of 2013. The project
2 decision documents will be posted on TxDOT's Website,
3 and will be available for review at TxDOT's Houston
4 District and Fort Bend area offices. In addition, a
5 notice regarding the availability of these documents
6 will be published in three newspapers: The Houston
7 Chronicle, the Fort Bend Herald, and Las Noticias de
8 Fort Bend.
9 Thank you for your attention. And now I'll
10 turn it back over to Mr. Koch.
11 MR. KOCH: Thank you, Ms. Brook.
12 Now we will begin the public comment session.
13 Only registered speakers will be called on.
14 Please raise your hand if you would like to speak for
15 the record tonight and have not received a speaker
16 registration card.
17 Our staff has cards for you to fill out.
18 We will collect any additional speaker cards
19 after we hear from our elected officials who are
20 present tonight and wish to make a public comment.
21 I believe -- I believe our public officials
22 have left the building.
23 Okay. As a reminder, if you would like to
24 comment, but do not wish to comment verbally tonight,
25 or if you wish to comment in more detail, you may

1 submit a written comment. Both written and verbal
2 comments will be considered equally. If you submit
3 your comments in writing, it is not necessary to
4 repeat your comments verbally. Comment forms are
5 available at the sign-in table and are attached to
6 your handout packet. Written comment forms can be
7 turned in tonight or sent by mail, provided they are
8 postmarked by May 30th, 2013. Written comments will
9 also be accepted by e-mail until May 30th, 2013. The
10 appropriate addresses for mailing or e-mailing your
11 comments are provided on the comment form. All
12 comments will be addressed in a public hearing summary
13 report that will be available for review this summer.
14 At this time, we will collect the remaining
15 speaker registration cards.
16 Okay. When your name is called, please move
17 to the table by the floor microphone where there are
18 several reserved seats.
19 Use the microphone in the front of the room
20 and please face Tamara Vinson, our court reporter, so
21 that we can have an accurate record of your comments.
22 The purpose of this hearing is to receive
23 your input and comments on issues relevant to the
24 project. All verbal, written and e-mailed comments
25 will be addressed as part of the Final Environmental

1 Assessment.
2 Before presenting your comments, please state
3 your name for the record and whom you represent. Each
4 speaker will be given three minutes to present their
5 comments.
6 A timed display on the screen will indicate
7 the start of each speaker's three minutes. The timer
8 will count down your remaining time. When the clock
9 is at zero, your speaking time is over.
10 Once the three-minute period is over, we ask
11 that you allow the next speaker to present their
12 comments.
13 You will not be allowed to give any unused
14 time to another speaker.
15 Again, we will not respond to questions
16 during this time. TxDOT representatives and members
17 of the consultant team will be available to answer
18 your questions following the comment session.
19 The names of speakers will be called in the
20 order they were received. The hearing will adjourn
21 after all who have registered to make verbal comments
22 have been heard.
23 The first speaker tonight is Cynthia Barratt,
24 followed by Richard Fields, followed by Bill Tobin.
25 Cynthia Barratt.

1 MS. BARRATT: I'm coming.
2 My name is Cynthia Barratt. I represent
3 OCuSOFT. We are a pharmaceutical company that
4 established business in Fort Bend County, specifically
5 Richmond and Rosenberg 27 years ago.
6 We are impacted by this proposed expansion in
7 a number of ways. One, we have 140 people that are
8 affected by this potential decision.
9 Specifically what we are, we have to be
10 certified by the FDA by now seeking certification from
11 VAWD to be able to sell our drugs across the United
12 States. We only sell ophthalmic drugs, but we are a
13 target because of the name of the pharmaceutical
14 company. And so we have very high security
15 requirements.
16 One of the things that we liked about where
17 we were and why we choose the location, we bought the
18 location and we just recently moved into it and had
19 our open house, but we've been in there, in the
20 building, a year. We've spent millions of dollars in
21 improvements. We've added amenities to keep employees
22 in our neighborhood and happy.
23 What we're concerned about is that, in the
24 proposed expansion, we will lose our safety. We don't
25 have access right now. We feel very safe because

there is not public access to our roads. We have to exit -- to get to our facility, you have to go down to Spur 529 and come in the back way on Kroesche Road.

With this proposed, our parking lot is in the front. We're not allowed to put any kind of fencing by the West Fort Bend. And we're going to be vulnerable to people stopping by the road, which we are on -- definitely on a corridor which DPS loves to pull people off.

And then, also, there seems to be some sort of human trafficking or something going on that they pull over eighteen-wheelers, and right in our front yard practically.

So we're concerned about people not only have to get off the freeway, travel down the access road and create more traffic, there is a Kroesche Road overpass that is -- really does not support the five lanes that are proposed.

It's a farm road that there are three people on one side and six people on the other. When I say people, housing. So that would be affected.

There's a green space that's available that would not even -- if it was utilized, it would not impact ours -- our doing business.

And then one of the last things I'd like to

say is, because of the proposed traffic, there's noise and which will also be a distraction to our business.

I would ask that you all please reconsider and move the road down -- down where there's farmland that would not impact a commercial entity and its employees.

Thank you.

MR. KOCH: Thank you, Ms. Barratt.

Mr. Richard Fields.

MR. FIELDS: Thank you.

My name is Richard Fields. I am representing tonight the Highway 36-A coalition, which is an organization promoting highway facilities between Freeport and Hempstead through Brazoria, Fort Bend and Waller counties.

There's going to be a lot of traffic in the future. And if we plan for that accordingly, then it will be much cheaper to build in the future than what we find now in some of the corridors where we have to secure right-of-way at current prices, as well as widen facilities that weren't designed to be widened.

That's the main concern that we have on looking at the schematic is that it's -- it provides for four lanes going to Thompson Highway and then three lanes beyond that. This is in each direction.

And where it goes from four lanes to three lanes, we just suggest carefully looking at that, especially in the northbound direction, to make sure that in the future, when it is widened to eight -- to four lanes in each direction, that -- that that is made as painlessly for future generations as possible.

We stand in full support of the project and we thank you for this opportunity.

MR. KOCH: Thank you, Mr. Fields.

Mr. Bill Tobin.

MR. TOBIN: Hi. I'm Bill Tobin. I just live here. I live about a half a mile from here. I'm just a citizen and I travel the corridor every day to and from. And so I've spent a lot of time in my car observing the conditions of this roadway.

The first thing I'd like to point out is, I think we have a severe bottleneck at 99. I think we all agree to that. And I think that going from four lanes to three at 762 needs to be rethought because I just think we're moving that bottleneck just down the road a bit.

I don't think enough people get on and off the freeway at 762 to justify the four- to three-lane reduction. I think -- I think that -- that bottleneck needs to be moved past the Brazoria Town Center. I

1 think that's going to be more beneficial for the
2 congestion issues that we could experience.
3 But maybe it's a cost issue. I'm not sure.
4 Or maybe you just can't get under the bridge with four
5 lanes, but I really think we should try really hard to
6 get that four lanes to go through and past the
7 Brazoria Town Center if possible. Obviously, I'm a
8 big supporter of this project.
9 The other issue I want to point out is
10 advanced TRAIN detection. I think this community
11 could really benefit if we had some mechanism or means
12 of putting advanced TRAIN detection on the highway
13 going southwest to let people know that there's
14 blockage occurring at 762, because we can always get
15 off at the Reading or Reading exit as an alternative
16 there.
17 Also, I think -- I notice that there's
18 changeable message signs going in to Houston, but not
19 coming out. And I'm curious about that, because I
20 think this corridor could benefit from more changeable
21 message signs, the kind of message signs that tell you
22 what the conditions road are ahead.
23 Because if I knew what the conditions are,
24 especially at 99 where it goes down to the bottleneck,
25 I could take U.S. 90A as an alternative and get to

1 Rosenberg that way if I just knew what the conditions
2 on the roadway were ahead of me.
3 So I think changeable message signs going
4 southwest just like we have going northwest and
5 northeast, I think that would be beneficial.
6 FM 762 exit going southbound definitely needs
7 more storage. Cars are coming, are queuing out onto
8 -- onto the freeway today. I saw the schematic
9 designs. I didn't see a whole lot of extra storage.
10 Maybe the frontage lanes will provide that extra
11 storage. But I think many of you have experienced the
12 cars backing out onto the freeway and I think that's
13 dangerous.
14 And I think that's pretty much it. I thought
15 -- I heard that comment about the sound barriers and I
16 thought, boy, if we could just maybe use the sound
17 barriers in residential area and not just pick one
18 versus another. I think there's a lot more areas in
19 need of sound barriers than just the -- whatever that
20 area is, the Greatwood area.
21 And that's -- that concludes my comments.
22 Thanks.
23 MR. KOCH: Thank you, sir.
24 Okay. I want to thank each of you for your
25 comments tonight.

1 Again, if you would like to comment in
2 writing, you may do so by completing a written comment
3 form. The form may be completed tonight or you may
4 mail or e-mail your comments, which must be received
5 or postmarked by May 30th, 2013. The appropriate
6 address for mailing or e-mailing your comments is
7 provided on the comment form.
8 As mentioned earlier, all comments will be
9 considered equally. If you provided comments
10 verbally, it is not necessary to repeat your comments
11 in writing. Your comments will be included in the
12 public hearing summary report, and will be a part of
13 this official record of the completed Final
14 Environmental Assessment.
15 On behalf of the Federal Highway
16 Administration and TxDOT, I would like to thank you
17 for your interest and participation in this public
18 hearing.
19 We would also like to thank Terry High School
20 for the use of this facility.
21 If there are no further comments, we will
22 close this hearing.
23 The time is 7:00 o'clock and this hearing
24 adjourned.
25 Thank you very much.

1 (Applause.)
2 (Public hearing adjourned at 7:00 p.m.)
3 * * * * *
4
5
6
7
8
9
10
11
12
13
14
15
16
17
18
19
20
21
22
23
24
25

1 THE STATE OF TEXAS)
2 COUNTY OF FORT BEND)
3 I, Tamara Vinson, Certified Shorthand
4 Reporter in and for the State of Texas, do hereby
5 certify that the above and foregoing transcript
6 contains a true and correct transcription of all
7 portions of the public hearing, all of which occurred
8 and were transcribed by me.
9 WITNESS MY OFFICIAL HAND this the 28th day of
10 May, 2013.
11
12
13
14
15 Tamara Vinson
Texas CSR No. 3015
16 Expiration Date: 12-31-2014
17 Vinson Reporting & Video Service
Firm Registration #288
18 3018 Colony Crossing Drive
Sugar Land, Texas 77479
19 (281)980-8233 FAX (281)980-0832
20
21
22
23
24
25