CODING GUIDE

GENERAL

This Coding Guide is used to interpret and maintain data in the computerized Bridge Inventory, Inspection and Appraisal Files. The interpretation of this coding guide will apply to both ON- and Off-system bridge data. The Bridge Inspection Database contains a record for each Bridge Class Structure (See definition of structures, Item 112) and tunnel on public roadways in Texas. Bridge Inventory, Inspection and Appraisal data is also used to update the National Bridge Inspection File (NBI) in Washington.

DATA QUALITY CANNOT BE OVEREMPHASIZED. The data in the Bridge Inventory, Inspection and Appraisal Files must be kept in as up-to-date condition as possible. Requirements for Bridge Inventory, Inspection and Appraisal data are that an inspection that reflects changes to existing structure data must be updated within 90 days of the evaluation or inspection that denotes the change in status. Newly built or rehabilitation projects are to be reported within 90 days of job completion. **Note: (SR) in the right margin means that item number is used in the Sufficiency Calculation. See the CICS BRISUF calculation in the Appendix for more information.**

CODING INSTRUCTIONS

When coding on a disk input or using a coding form, the following rules should apply:

(1) Use one character per space. *Complete* all data items for each bridge when adding new records. **Before loading transactions, perform a virus scan of any disks received from outside sources.**

(2) Use alpha characters only in the fields where specified, and use capital letters.

(3) Complete coding for each item and column entirely; justify right or left. Read and follow coding instruction for the item number being coded.

(4) To remove data from the file, use uppercase "X," and it will replace the existing value with "Blank." Code the complete data field. Items 6.1, 7, and 9 are text fields and should never be entered as "Blank" or removed. The coding instructions for each item will explain the values to be used and if a blank is proper in that item.

(5) Code data consistently. If data is coded for a structure in one direction, code only data that is for that direction. If you are not clear on what is to be coded in a particular field, ask questions; call someone for help with questions. Bridge Division's (BRG) Bridge Inspection Branch will be glad to answer any coding or engineering and structural questions that you may have.

(6) Note: Card number and items 2,3, 8 and 5.1 are used as key identification. If these identifiers are coded incorrectly or missing, they will cause fatal errors; i.e., no action will be taken to update the record or the wrong record will be updated.

(7) Card Number Explanation, 2 Digits: The correct card number must be used on any transaction entered. If the card number is missing, the transaction will not be entered in the update. If the card number is wrong, the transaction will be entered in the update and will change data items not intended to be changed.

(8) Uses of update codes in column 19, card 01: The update codes listed below will establish the type of transaction (add record, delete record, change key identification or change data item) entered in the file or on a bridge record.

Add — Use "A" in column 19 on Card 01 to add a new record to the file. Use only on card 01, and complete coding for all data items required for that record. Caution: If the record is already on file, this type of transaction will be rejected. ADD COMPLETE RECORDS ONLY — DO NOT ADD PARTIALLY COMPLETED RECORDS.

Delete —Use "D" in column 19 of Card 01 to remove (delete) a record from the file. Code only items 2, 3, 8.4, 8.5, 8.6, 8.3 and 5.1 to accompany the "D" in Column 19.

Blank —A blank transaction code of blank in column 19 will cause the transaction entered to be handled as a change to existing records on file. Enter only the card or cards and the Key Identification of the data item that are to be changed.

Change — Use "C" in column 19, Card 12 to change either the Inventory Route Record Identification (Items 8.4, 8.5, 8.6, 8.3 or 5.1) or the Intersecting Route Key Identification (Items 8.4A, 8.5A, 8.6A, 8.3A or 5.1A). This cannot be used to change ***On-System*** records to ***Off-system*** or ***Off-system*** records to ***On-system*** records. If there are data items to be changed along with the record identification, Card 01 or Card 12 can be used with the update code of "C" entered in column 19.

There is an RPF in Roscoe to help build transactions. Type in 'BRGRPF' in the command area of any Roscoe region.

Answer 'Y' to delete AWS. Go through the screens and enter transactions and save in a Roscoe member at the end. This

RPF places an '*' in position 20 of the transaction to indicate that it was built using the RPF.

Item 2 — State Highway Department District	Card 01	2 Digits

The highway district in which the bridge is located shall be represented by a 2-digit code.

Item 3 — County Code	Card 01	3 Digits

Code the TxDOT county number, using preceding zeros if it is less than three digits.

Item 4 — City, Town, or Place Code (Census Place Code)	Card 01	5 Digits

Cities, towns, townships, villages, and other census-designated places shall be identified using the Federal Information Processing Standards (FIPS) codes given in the current version of the ***Census of Population and Housing — Geographic Identification Code Scheme.*** If there is no FIPS place code, use City number; if rural, then code all zeros. For on-system bridges the city number is furnished by program. See the ***Roadway Information System (RIS) Manual*** for the city number list to code city number for off system.

Item 5 — Inventory Route	Card 01	10 Digits

The inventory route is a 10-digit code composed of 6 segments.

Segment	Description	Length
5.1	Structure Function	1 Digit
5.2	Route System	2 Digits
5.3	Designated Level of Service	1 Digit
5.4	Route Number	4 Digits
5.5	Directional Suffix	1 Digit
5.6	Business Route Suffix	1 Digit

Item 5.1 — Structure Function Card 01 1 Digit **(SR)**

There are two (2) types of Bridge Inventory, Inspection and Appraisal Inventory records: "On" and "Under." Code Item 5.1 structure functions using one of the following codes:

Code	Description
1	Route carried "On" the structure
2	Single route goes "Under" the structure
A Thru Z	Multiple routes go "Under" the structure
5	Railroad Underpass
6	Pedestrian Underpass
7	Utility Structure Underpass
8	Tunnel

A signifies the first of multiple routes under the structure.

B signifies the second of multiple routes under the structure.

Z signifies 26 routes under the structure.

It cannot be overemphasized that all route-oriented data must agree with the coding as to whether the inventory route is "On" or "Under" the structure.

"On" signifies that the inventory route is carried "On" the structure. All of the Bridge Inventory, Inspection and Appraisal data items must be coded, unless specifically excepted, with respect to the structure and the inventory route "On" it.

"Under" signifies that the inventory route goes "Under" the structure. If an inventory route beneath the structure is on a federal-aid system, is a defense route or is otherwise important, a record must be coded to identify it. The type of code must be 2 or an alphabetic letter A through Z. Code 2 for a single route "Under," and code A, B, C, D, etc., consecutively for multiple routes "Under" the same structure. Defense routes shall be listed first. If more than one route is under the structure, Code 2 shall not be used. Instead, use A for the first route, B for the second, and so on for the consecutive routes.

Tunnels shall be coded only as an "Under" record; that is, they shall not be coded as a structure carrying highway traffic.

There are situations of a route "Under" a structure, where the structure does not carry a highway, but may carry a railroad, pedestrian traffic, or even a building. These are coded the same as any other "Under" record and no "On" record shall be coded.

When a structure is "On" and "Under", determine the inventory route first. The inventory route is determined by hierarchy of highway class; i.e., for an Interstate over or under a U.S. Highway, the Interstate will be coded as the inventory route, and the U.S. Highway will be coded the intersecting route. If two highways are of the same hierarchy class, the lowest highway number will be the coded inventory route, and the higher numbered route will be the intersecting route. The record identification to be coded in Item 8 — Structure Number, (8.3 thru 8.6) is now established along with the other (intersecting route) route Item 8A (8.3A thru 8.6A) record identification.

Example 1: IH 10 over IH 20 – Item 5.1 IH 10 structure function will be coded 1, and the control-section, bridge number of IH 10 will be coded in Items 8.3 thru 8.6 Structure Number. Item 5.1A, intersecting route structure function, will be coded 2, and the control-section, bridge number for IH 20 will be coded in Items 8.3A thru 8.6A, the intersecting route key identification.

Example 2: US Highway under FM Highway – The US Highway Item 5.1 structure function will be coded 2, and the control-section, bridge number of the US Highway will be coded in Items 8.3 thru 8.6, Structure Number. Item 5.1A, intersecting route structure function will be coded 1, and the control-section, bridge number of the FM will be entered in Items 8.3A thru 8.6A, intersecting route key identification.

Item 5.1A — Intersecting Route Structure Function	Card 10	1 Digit	**(SR)**

Enter the structure function for the intersecting route. Use the same code chart and instructions shown in Item 5.1. Note: the structure's function *can not* be coded the same as the entry in Item 5.1.

Item 5.2 — Principal Inventory Route	Card 01	2 Digits	**(SR)**

The next two digits identify the highway signing:

Code	Description
11	Interstate Highway
12	US Highway (Spur)
13	State Highway
14	State Loop or Spur
15	Farm or Ranch to Market Road
16	Park Road
17	Recreation Road/Spur
18	Metropolitan Highway (Federal-Aid Urban System Routes that have been designated part of the State Highway System)
19	Other On-System Route
20	Toll Road
Code	Description
21	County Road/Highway
23	Old San Antonio Road
24	NASA 1
25	Business Interstate
26	Business U. S. Highway
27	Business S.H. Highway
28	Business F.M. Highway
29	Principal Arterial Street
31	City Street
41	Federal Lands Road
51	State Lands Road
99	Other

Item 5.2A — Intersecting Route System	Card 10	2 Digits	**(SR)**

Enter the system for the intersecting route using the code chart shown for Item 5.2.

Item 5.3 — Designated Level of Service Card 01 1 Digit **(SR)**

Identify the designated level of service for the inventory route using one of the following codes:

Code	Description
0	None of the Below
1	Mainlane (service roads and ramps are NOT to be coded 1)
2	Alternate
3	Bypass
4	Spur
5	Toll Road
6	Business
7	Ramp, Connector, etc.
8	Service and/or Unclassified Frontage Road
9	Truck Route

Item 5.3A — Intersecting Route Designated Level of Service Card 01 1 Digit **(SR)**

Identify the designated level of service for the intersecting route using one of the following codes:

Code	Description
0	None of the Below
1	Mainlane (service roads and ramps are NOT to be coded 1)
2	Alternate
3	Bypass
4	Spur
5	Toll Road
6	Business
7	Ramp, Connector, etc.
8	Service and/or Unclassified Frontage Road
9	Truck Route

Item 5.4 — Route Number Card 01 4 Digits

Code the route number of the inventory route in the next 4 digits. This value shall be right justified in the field with leading zeros filled in. (See examples below.)

EXAMPLES:

Code	Description
0040	Interstate 40
0102	State Highway 102
2222	Farm Market Road 2222
0010	Tunnel on Interstate 10
0155	County Road

If concurrent routes are of the same hierarchy level, denoted by the route system, the lowest numbered route shall be coded. For off-system bridges, code the county road number posted for that road. For county roads that are named, use a Table of Equals and code that number into Item 5.4.

Item 5.4A — Intersecting Route Highway Number	Card 10	4 Digits

Enter the highway number that describes the intersecting route. See Item 5.1 for complete instructions.

Item 5.5 — Directional Suffix Card 01 1 Digit

Code the directional suffix to the route number of the inventory route, when it is part of the route number, using one of the following codes:

Code	Description
0	Not Applicable
1	North
2	East
3	South
4	West

Item 5.5A — Intersecting Route Direction Card 10 1 Digit

Enter zero if there is an intersecting route. Code 2 if the route is IH 35E or 4 if it is IH 35W.

Item 5.6 — Route Suffix Card 01 1 Digit

Business route suffix coding is for on-system only. This alpha character coding will be furnished to the Bridge Inventory, Inspection and Appraisal File by program. DO NOT ATTEMPT TO CODE.

This item will appear only on the output file (Lister Program 120179 – See RJEJCL). In the direction of inventory of a highway with business routes, the first business route will be given the letter suffix of "A," the next "B," and so on across the state.

In some cases, letters may be used with route numbers and as a part of the route numbers and not to indicate direction. In such cases, the letter should be included in the 4-position route number field.

Below are examples of Items 5.1 through 5.6 completed.

EXAMPLES:

	Record	Code
Interstate 35, On	1 111 0035 00	1111003500
Interstate 35E, Under	2 111 0035 20	2111003520
State Highway 104, Spur, Under	2 134 0104 00	2134010400
City Street, On	1 310 0000 00	1310000000
Ramp From IH 35, Under	2 117 0035 00	2117003500
County Highway 173, On	1 211 0173 00	1211017300
Interstate 20, Under	2 111 0020 00	2111002000
Interstate 635, On	1 111 0635 00	1111063500
State Highway 120 (Defense Route), Under	A 131 0120 00	A131012000
US 90A, Under	B 122 0090 00	B122009000
Business Rt. IH 35, On	1 256 0035 0A	125600350A

Item 5.6A — Intersecting Route Suffix Card 10 1 Digit

See Item 5.6 for complete instructions.

Item 6 — Features Intersected | Card 01 | 25 Digits

This item contains a description of the features intersected by the structure and a critical facility indicator. There are 25 digits divided into 2 segments.

Segment	Description	Length
6.1	Features Intersected	24 Digits
6.2	Critical Facility Indicator	1 Digit

When Item 5.1 is coded the route "Under," this item will describe the route or feature under.

The information to be recorded for this item in the first 24 digits shall be the name or names of the features intersected by the structure. When one of the features intersected is another highway, the signed number or name of the highway shall appear first (left most) in the field. The names of any other features shall follow, separated by a semicolon or a comma. Parentheses shall be used to provide a second identification of the same feature (see third example). Abbreviations may be used where necessary, but an effort shall be made to keep them meaningful. The data in this segment shall be left justified in the first 24 positions without trailing zeros.

A structure on a designated defense highway considered to be a critical facility (Item 6.2), shall no longer be codedd by an asterisk in the 25th position. A blank space shall be coded in the 25th position in all cases..

I 35, US 81, Mill Road
CR 72, Colorado R
CR 42 (Pond Road)

Item 7 — Facility Carried By Structure | Card 02 | 18 Digits

The facility being carried by the structure shall be left justified without trailing zeros. Code the direction of travel if divided highway. (Note: Do not code the right or left lane.)

EXAMPLES:

US 90 EB or WB
US 183 SB or NB
County Road 450
US 66
7th Street
C & O Railroad (appropriate for “Under” record only)
Pedestrian Bridge (appropriate for “Under” record only)

Item 8 — Structure Number | Card 01 | 10 Digits

Structure number is a 10 digit code composed of 4 segments.

Segment	Description	Length
8.3	Duplicate Route Over	1 Digit
8.4	Control or County Road I.D.	4 Digits
8.5	Section or City Street Number	2 Digits
8.6	Permanent Bridge Number	3 Digits

Note: The complete 15 digit NBI structure number will be Items 2, 3, 8.3, 8.4, 8.5, and 8.6.

Item 8.3 — Duplicate Route Over	Card 01	1 Digit

This item is used to identify bridges that carry more than one Bridge Defense Highway Route over a structure. This item should be coded zero for a single route over and A, B, C, etc., for each consecutive route over the structure.

Note: BRG will identify this item if needed. If a replacement structure is built, this code should move with the replacement structure if the highway routes remain the same.

If there are any questions concerning this item, call BRG for assistance.

Item 8.3A — Intersecting Duplicate Route Over	Card 10	1 Digit

See Item 8.3.

		(Off System)	6 Digits
Item 8.4 — Control	Card 01	(On System)	4 Digits

Item 8.4 will be coded with the control for the inventory route. All digits shall be coded with numeric or preceding zeros. For off-system bridges, items 8.4 and 8.5 will be combined to contain 6 digits for the county road or city street number.

All county road numbers shall be coded AA in the first two digits. Refer to the ***County Road Index Maps*** *for* these numbers. For new county roads use the next highest number from the map and furnish BRG with an area copy showing the alignment. City street numbers shall be coded from the ***Index of City Streets Numbers for Cities in Each District***. For new city streets added to a city, call TPP to obtain new city street numbers.

All digits shall be coded.

		(Off System)	6 Digits
Item 8.4A — Intersecting Route Control	Card 10	(On System)	4 Digits

Enter the control for the intersecting route as discussed in Item 5.1 — Structure Function. If the intersecting route is a county road or city street, enter the 6 digit alpha-numeric identification number. If there is no intersecting route, leave cards 10 and 11 blank.

Item 8.5 — Section	Card 01	2 Digits

Code the section number for the control coded in Item 8.4 for on system structures.

Item 8.5A — Intersecting Route Section Number	Card 10	2 Digits

For on-system intersecting routes, enter the section number for the control entered in Item 8.4A.

Item 8.6 — Permanent Bridge Number	Card 01	3 Digits

This will be the permanent bridge number assigned to each bridge.

Item 8.6A — Intersecting Route Bridge Number	Card 10	3 Digits

Enter the permanent bridge number for the intersecting route. It will be the same 3 digit number entered in Item 8.6.

Item 9 — Location	Card 02	25 Digits

This item contains a narrative description of the bridge location. It is recommended that the location be keyed to distinguishable features on an official highway department map, such as road junctions and topographical features. This item shall be left justified without trailing zeros.

EXAMPLES:

6 MI. SW. Of Richmond

3.5 MI. S. Of JCT. SR 69

Item 10 — Inventory Route, Minimum Vertical Clearance (XX feet XX inches)	Card 02	4 Digits

Code the minimum vertical clearance over the inventory route identified in Item 5, whether the route is "On" the structure or "Under" the structure. The minimum clearance for a 10-foot width of the pavement (or traveled part of the roadway) where the clearance is the greatest shall be recorded and coded in feet and inches. For structures having multiple openings, clearances for each opening shall be recorded, but only the greatest of the minimum clearances for the two or more openings shall be coded regardless of the direction of travel. This would be the practical maximum clearance. When no restriction exists, code 9999. For bridges that have been restricted on the roadway approaches, code the vertical restriction over the bridge deck, not the approach restriction. Use District Use Field (Item 126) to record the approach restriction. Item 10 shall not be coded less than 0900.

Item 10A — Intersecting Route Vertical Clearance (XX feet XX inches)	Card 11	4 Digits

Enter the vertical clearance in feet and inches. If no restriction exists, code 9999.

Item 11 — Inventory Route Milepoint (XX.XXX Miles)	Card 02	5 Digits

Milepoint location is a 5-digit ***number*** representing the milepoint to thousandths of a mile (with an assumed decimal point). The milepoint shall reference the beginning of the structure in the direction of increasing mileage of the inventory route identified in Item 5. If the milepoint location of the structure is at the beginning of the route mileage, code with a value of 00000.

Bridges are also reported as part of the Highway Performance Monitoring System (HPMS) File. The milepoint is critical to this study. The HPMS coordinator for each respective district shall furnish a listing with the identification of the selected sample sections. These identifications of sample sections are listed by control-section or county road or city street number that will match the identification of bridges in the Bridge Inventory, Inspection and Appraisal File. If a bridge is part of a sample section, the milepoint should be within the sample section milepoint range.

Item 11A — Intersecting Route Milepoint (XX.XXX)	Card 10	5 Digits

Enter the intersecting route milepoint to the thousandth of a mile (with an assumed decimal point). See instructions in Item 5.1 for examples.

Item 11.1 — Inventory Route Milepoint Date	Card 01	6 Digits (YYYYMM)

Milepoint date will be the date of milepoint in the Road Inventory RI 2 File. This date must be furnished when adding on-system bridges. The milepoint date can be obtained from the RI 2 listing or TPP will furnish the date. (Reference: ***Roadway Information System [RIS] Manual***, RI 2 T Log).

Item 11.1A — Intersecting Route Milepoint Date	Card 01	6 Digits (YYYYMM)

When an intersecting route is present, a milepoint date must be furnished for that route. See Item 11.1.

Item 11.2 -	**Inventory Route Reference Marker and Displacement**	Card 01	11 Digits

Reference marker and displacement is an 11 digit code composed of 4 segments. Refer to the Texas Reference Marker System.

11.1B	Reference Marker	4 digits
11.1B	Suffix, blank if none	1 digit
11.1B	Reference Marker Sign (+ or -)	1 digit
11.1B	Reference Marker Displacement	5 digits

These reference markers must relate completely with the on-the-ground location for each bridge.

Item 11.2A — Intersecting Route Reference Marker and Displacement	Card 10	11 Digits

Enter Intersecting Route Reference Marker and Displacement. See instructions in Item 11.1B.

Item 12 — Base Highway Network	Card 13	1 Digits

This item is to be coded for all records in the inventory route. The Base Highway Network includes the through lane (mainline) portions of the NHS, rural/urban principal arterial system and rural minor arterial system. Ramps, frontage roads and other roadways are not included in the Base Network. For the inventory route identified in Item 5 - Inventory Route, indicate whether the inventory route is on the Base Highway Network or not on that network. Use one of the following codes:

Code	Description
0	Inventory Route is not on the Base Network
1	Inventory Route is on the Base Network

Item 12A — Intersecting Route Base Highway Network	Card 13	1 Digits

This item is to be coded for all records in the intersecting route. The Base Highway Network includes the through lane (mainline) portions of the NHS, rural/urban principal arterial system and rural minor arterial system. Ramps, frontage roads and other roadways are not included in the Base Network. For the intersecting route identified in Item 5 - Intersecting Route, indicate whether the intersecting route is on the Base Highway Network or not on that network. Use one of the following codes:

Code	Description
0	Inventory Route is not on the Base Network
1	Inventory Route is on the Base Network

Item 13 — LRS Inventory Route, Subroute Number — Card 13 — 12 Digits

If Item 12 - Base Highway Network has been coded 1, the information to be recorded for this item is inventory route for the State's linear referencing system (LRS). If Item 12 has been coded 0, this entire item should be left blank. This item is a 12-digit code composed of 2 segments.

Segment	Description	Length
13A	LRS Inventory Route	10 digits
13B	Subroute Number	2 digits

The LRS inventory route and subroute numbers to be reported in this item must correspond to the LRS inventory route and subroute numbers reported by the State for the HPMS. The LRS inventory route number is coded in the ten positions of segment 13A, right justified and zero filled. The subroute number, if it exists, is coded in the two positions of segment 13B, right justified and zero filled.

The LRS inventory route number can be alphanumeric, but must not contain blanks. The LRS inventory route number is not necessarily the same as that posted along the roadway, but is a number used to uniquely identify a route within at least a county and perhaps throughout the State.

The subroute number is a number that uniquely identifies portions of inventory route sections where duplicate milepoints occur. These subroute numbers, if they exist. are identified in the State's HPMS-LRS records. If there is no subroute number, code 00 in this segment.

EXAMPLES:	Code
Inventory Route 2775, Subroute Number 0	000000277500
Inventory Route 2775, Subroute Number 3	000000277503

Item 16 — Latitude (XX degrees XX minutes XX.XX seconds) — 8 Digits

This item will be calculated by program and supplied to the Bridge Inventory, Inspection and Appraisal File Output. This item is shown for reference only. ***DO NOT ATTEMPT TO CODE***.

EXAMPLE:

	Code
Latitude is 35° 27’ 33.16′	35273316

Item 16.1 — GPS Latitude (XX.XXXXXXXX degrees) Card 13 10 Digits

For bridges on STRAHNET and STRAHNET Connector highways and on the NHS, record and code the latitude of each in decimal degrees to 8 decimal places (with an assumed decimal point). A leading zero shall be coded where needed. The point of the coordinate may be the beginning of the bridge in the direction of the inventory or any other consistent point of reference on the bridge, which is compatible with the LRS. If the bridge is not on a STRAHNET highway or the NHS, a code of all zeros is acceptable, but it is preferable to code the latitude if available. The reason for the increased precision is to facilitate the use of Global Positioning System (GPS) data directly into this item. The increased precision is not currently mandatory and, if GPS readings are not available the current measuring methods and level of precision may continue to be used.

EXAMPLE:

	Code
Latitude is 35.273	35.27300000

Item 17 — Longitude (XXX degrees XX minutes XX.XX seconds) 9 Digits

This item will be calculated by program and supplied to the Bridge Inventory, Inspection and Appraisal File Output. This item is shown for reference only. ***DO NOT ATTEMPT TO CODE***.

EXAMPLE:

	Code
Longitude is 81° 5′ 15.23”	081051523

Item 17.1 — GPS Longitude (XXX.XXXXXXXX degrees) Card 13 11 Digits

For bridges on STRAHNET and STRAHNET Connector highways and on the NHS, record and code the longitude of each in decimal degrees to 8 decimal places (with an assumed decimal point). A leading zero shall be coded where needed. The point of the coordinate may be the beginning of the bridge in the direction of the inventory or any other consistent point of reference on the bridge, which is compatible with the LRS. If the bridge is not on a STRAHNET highway or the NHS, a code of all zeros is acceptable, but it is preferable to code the longitude if available. The reason for the increased precision is to facilitate the use of Global Positioning System (GPS) data directly into this item. The increased precision is not currently mandatory and, if GPS readings are not available the current measuring methods and level of precision may continue to be used.

EXAMPLE:

	Code
Longitude is 81.58	08158000000

Item 17.2 — GPS Method Used to Collect Lat. And Long. Card 13 1 Digit

Use one of the codes below to indicate which method was used to determine the Latitude and Longitude in items 16.1 and 17.1 for this structure. Codes 2, 3 and 4 shall only be coded by the Bridge Division. If there is data that meets the criteria for codes 2 ,3 and 4 please contact the Bridge Division for updating.

Code	Description
0	Unknown or other
1	GPS (Not Differentially Corrected)
2	CRI Project (County Road Inventory)
3	GPS (Differentially Corrected)
4	Generated from reference marker data

Item 19 — Bypass, Detour Length (XX Miles) Card 03 2 Digits **(SR)**

If a ground level bypass is available at the structure site for the inventory route, record and code the detour length as 00.

If the bridge is one of twin bridges and is not at an interchange, code 01 where the other twin bridge can be used as a temporary bypass with a reasonable amount of crossover grading. In other cases, indicate the actual length to the nearest mile of the detour length. The detour length should represent the total additional travel for a vehicle which would result from closing of the bridge. The factor to consider when determining if a bypass is available at the site is the potential for moving vehicles, including military vehicles, around the structure. This is particularly true when the structure is in an interchange. For instance, a bypass likely would be available in the case of diamond interchanges, interchanges where there are service roads available, or other interchanges where the positioning and layout of the ramps is such that they could be used without difficulty to get around the structure. Code 99 for 99 miles or more.

The detour route will be established following allowable criteria determined by the governing authority. (Some authorities will not allow a designated detour over a road or bridge of lesser "quality").

EXAMPLES:

Description	Code
Diamond interchange, structure by-passable	00
Cloverleaf, not by-passable; 8-mile detour	08
Structure over river; 121-mile detour	99
Structure over highway, no interchange, By-passable at ground level	00
Structure on dead-end road	99

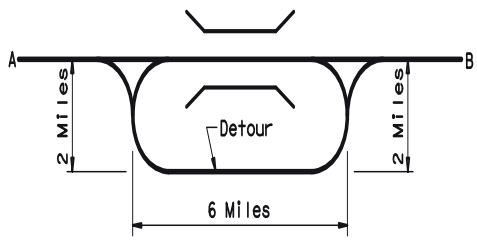

Bypass, Detour Length, A - B = 4 Miles

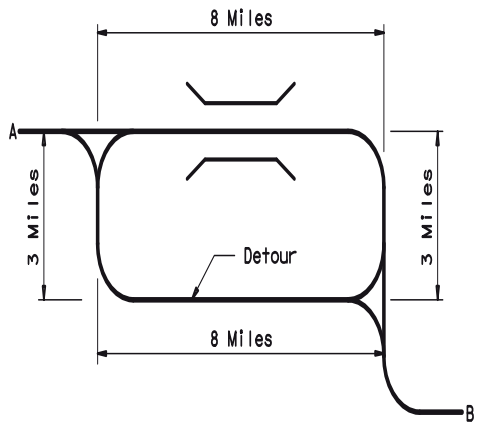

Bypass, Detour Length, A - B = 0 Miles

Item 19A — Intersecting Route Bypass Detour Length (XX Miles) Card 11 2 Digits **(SR)**

Enter the bypass detour length for the intersecting route to the nearest mile. If a ground level bypass is available at the structure site for intersecting route, record and code the detour length as 00. If the intersecting route is carried by twin bridges and is not at an interchange, code 01, where one twin bridge can be used as a temporary bypass for the other lane with a reasonable amount of crossover grading. In other cases, indicate the actual total additional travel for a vehicle, which would result from the closing of the bridge (detour length). Code 99 for 99 miles or more. See Item 19 for further instructions and examples.

Item 20 — Toll	Card 03	1 Digit

The toll status of the structure is indicated by this item. Use one of the following codes:

Code	Description
1	Toll bridge. Tolls are paid specifically to use the structure.
2	On toll road. The Inventory or Intersecting Route carries a toll road; that is, tolls are paid to use the facility, which includes both the highway and the structure.
3	On free road. The structure is toll-free and carries a toll-free highway.
4	On Interstate toll segment under Secretarial Agreement. Structure functions as a part of the toll segment.
5	Toll bridge is a segment under Secretarial Agreement. Structure is separate agreement from highway segment.

Item 20A — Intersecting Route Toll Code	Card 11	1 Digit

Enter the toll code using the following code chart:

Code	Description
1	Toll bridge. Tolls are paid specifically to use the structure.
2	On toll road. The Inventory or Intersecting Route carries a toll road; that is, tolls are paid to use the facility, which includes both the highway and the structure.
3	On free road. The structure is toll-free and carries a toll-free highway.
4	On Interstate toll segment under Secretarial Agreement. Structure functions as a part of the toll segment.
5	Toll bridge is a segment under Secretarial Agreement. Structure is separate agreement from highway segment.

Item 21 — Maintenance Responsibility Card 03 2 Digits

The codes below shall be used to represent the type of agency that has primary responsibility for maintaining the structure. If more than one agency has equal maintenance responsibility, code only one agency in the hierarchy of state, federal, county, city, railroad, and other private concerns.

Code	Description
01	State Highway Agency
02	County Highway Agency
03	Town or Township Highway Agency
04	City or Municipal Highway Agency
11	State Park, Forest, or Reservation Agency
12	Local Park, Forest, or Reservation Agency
21	Other State Agencies
25	Other Local Agencies
26	Private (other than railroad)
27	Railroad
31	State Toll Authority
32	Local Toll Authority
60	Other Federal Agencies (not listed below)
61	Indian Tribal Government
62	Bureau of Indian Affairs
64	U.S. Forest Service
66	National Park Service
68	Bureau of Land Management
69	Bureau of Reclamation
70	Military Reservation/Corps of Engineers
72	Air Force
73	Navy/Marines
74	Army
75	NASA
76	Metropolitan Washington Airports Service
80	Unknown

Item 22 — Owner Card 03 2 Digits

The codes used in Item 21 — Maintenance Responsibility shall be used to represent the type of agency that is the primary owner of the structure. If more than one agency has equal ownership, code only one agency in the hierarchy of state, federal, county, city, railroad, and other private concerns.

Item 22.1 — Maintenance Section Number Card 03 2 Digits

The maintenance section number will be furnished by TPP Division. Check the Road Inventory Record (Straight Line Diagram RI-1) or the Texas Reference Marker file for agreement.

Item 23.1 — Project Type Card 03 1 Digit

The codes below are used to identify the type of funding used to build the structure.

Code	Description
1	Federal Aid (F.A.)
2	100% State Funds — No F.A. Funds
3	Other Public Funds
4	Toll Road Fund Only
5	Combination of Above
9	Unknown — None of the Above

Item 23.2 — Job Description Card 03 9 Digits

Code the control-section and job number (CSJ) used to construct the structure. This may or may not be the control-section the bridge is located on.

For major rehabilitation jobs, use the latest CSJ.

Item 26 — Inventory Route Functional Classification Card 03 2 Digits **(SR)**

For the inventory route, code the functional classification using one of the following codes:

	URBAN CODE			FUNCTIONAL SYSTEM	RURAL
Population (X1000)	5-49	50-199	200+		
	11	21	41	Interstate	01
	12	22	42	Other Freeway & Expressway	—
	13	23	43	Other Principal Arterial	02
	14	24	44	Minor Arterial	03
	15	25	45	Collector	—
	—	—	—	Major	04
	—	—	—	Minor	05
	16	26	46	Local	06

Item 26A — Intersecting Route Functional Classification Card 11 2 Digits **(SR)**

Enter the functional classification for the intersecting route.

	URBAN CODE			FUNCTIONAL SYSTEM	RURAL
Population (X1000)	5-49	50-199	200+		
	11	21	41	Interstate	01
	12	22	42	Other Freeway & Expressway	—
	13	23	43	Other Principal Arterial	02
	14	24	44	Minor Arterial	03
	15	25	45	Collector	—
	—	—	—	Major	04
	—	—	—	Minor	05
	16	26	46	Local	06

Item 27 — Year Built Card 03 4 Digits **(SR)**

Record and code the year of construction of the structure. Code all 4 digits of the year in which construction of the structure was completed. If the year built is unknown, provide the best estimate. If the year built is prior to 1900, code 1900. See Item 106 — Year Reconstructed.

EXAMPLES:

Construction Completed	Code
1956	1956
1892	1900

Item 28 — Lanes On and Under the Structure | Card 03 | 4 Digits | (SR)

Record and code the number of lanes being carried by the structure and being crossed over by the structure as a 4-digit number composed of 2 segments. The number of lanes should be right justified in each segment with leading zero coded as required.

Segment	Description	Length
28.1	Lanes on the structure	2 Digits
28.2	Lanes under the structure	2 Digits

Include all lanes carrying highway traffic (i.e., cars, trucks, buses) which are striped or otherwise operated as a full width traffic lane for the entire length of the structure or under the structure by the owning/maintaining authority. This shall include any full width merge lanes and ramp lanes, and shall be independent of directionality of usage (i.e., a 1-lane bridge carrying 2-way directional traffic is still considered to carry only one lane on the structure. Any bridge with a roadway width of less than 18 feet must be considered one-lane.)

When the inventory route is "Under" the structure, the obstruction over the inventory route may be other than a highway bridge (railroad, pedestrian, pipeline, etc.). Code 00 for these cases if there are not highway lanes on the obstructing structure.

EXAMPLES:

Description	Code
1 lane on, 0 lanes under	0100
3 lanes on, 1 lane under	0301
Railroad and pedestrian on, 4 lanes under	0004

Item 29 — Average Daily Traffic | Card 03 | 6 Digits | (SR)

Code a 6-digit number that shows the average daily traffic volume for the inventory route identified in Item 5.1. Make certain the unit's position is coded even if estimates of ADT are determined to tens or hundreds of vehicles; that is, appropriate trailing zeros shall be coded. The ADT coded should be the most recent ADT counts available for on-system bridges from the RI File. Included in this item are the trucks referred to in Item 109 — Average Daily Truck Traffic. The ADT shall be coded at the time the record is added to the File for both on- and off-system.

The ADT must be compatible with the other items coded for the bridge. For example, parallel bridges are coded as follows: If Item 28 — Lanes On and Under the Structure and Item 51 — Bridge Roadway Width, Curb-to-Curb are coded for each bridge separately, then the ADT must be coded for each bridge separately (not the total ADT for the route). The ADT cannot exceed the total for the milepoint range in the RI File. For on-system bridge records only, after the ADT is added for a new record, District transactions will not change the ADT. ADT changes will be supplied by program. All off-system ADTs will be coded by each district with ADT obtained from TPP Traffic Section. If the bridge is closed, code the actual ADT from before the closure occurred.

EXAMPLES:

Average Daily Traffic	Code
540	000540
15,600	015600
24,000	024000

Item 29A — Intersecting Route Average Daily Traffic (ADT) Card 11 6 Digits **(SR)**

Enter the average daily traffic for the intersecting route. Make certain the unit's position is coded even if estimates of ADT are determined to tens or hundreds of vehicles; that is, appropriate trailing zeros shall be coded. Use the most recent figures available. **See Item 29 for examples.**

Item 30 — Year of Average Daily Traffic Card 03 4 Digits

Record the year represented by the ADT in Item 29. Code the last 2 digits of the year so recorded. The year of ADT will be updated by program for on-system. Year of ADT will be coded for each off-system bridge record and kept current by each district.

EXAMPLE:

Year of ADT	Code
1988	1988

Item 30A — Intersecting Route Date of ADT Card 11 4 Digits

Enter the year represented by the ADT for the intersecting route. See Items 29 and 30.

See the April 2018 Addendum (pg A-1) for guidance for coding of Item 31.

Item 31 — Design Load Card 03 1 Digit

~~Use the codes below to indicate the live load for which the structure was designed.~~

~~Code~~	~~Description~~
~~1~~	~~H 10~~
~~2~~	~~H 15~~
~~3~~	~~HS 15~~
~~4~~	~~H 20~~
~~5~~	~~HS 20~~
~~6~~	~~HS 20 + Mod~~
~~7~~	~~Pedestrian~~
~~8~~	~~Railroad~~
~~9~~	~~HS 25~~
~~0~~	~~Other or Unknown~~

Item 32 — Approach Roadway Width (XXX feet) Card 03 3 Digits **(SR)**

For the route carried by the structure, code to the nearest foot a 3-digit number that represents the *normal* width of usable roadway approaching the structure. Usable roadway width will include the width of traffic lanes and the widths of shoulders, where shoulders exist as defined in the following paragraphs. Code 000 for Railroad, Pedestrian and Utility underpasses (non-vehicular structures).

Shoulders must be constructed and normally maintained flush with the adjacent traffic lane, and must be structurally adequate for all weather and traffic conditions consistent with the facility carried.

Un-stabilized grass or dirt, with no base course, flush with and beside the traffic lane is not to be considered a shoulder for this item.

For structures with medians of any type, this item should be coded as the sum of the usable roadway widths for the approach roadways (i.e., all median widths which do not qualify as shoulders should *not* be included in this dimension).

When there is a variation between the approaches at either end of the structure, record and code the most restrictive of the approach conditions.

EXAMPLES:

Left Shoulder	Left Roadway	Median Shoulders	Right Roadway	Right Shoulders	Code
4.0	-	-	16	6.0	026
6.0	-	-	36	12.0	054
12.0	48	30	48	12.0	150
10.0	24	16	36	10.0	096

The last example above represents the code method for a structure in which the most restrictive approach has the cross-section shown below:

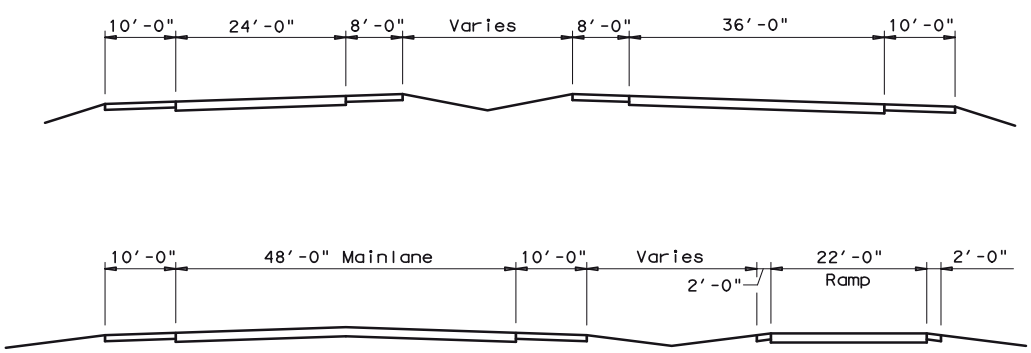

Regardless of whether there are parallel structures or single structures, the data coded must be compatible with the other related route and bridge data (i.e., if Item 51 — Bridge Roadway Width, Curb-to-Curb is for traffic in one direction only, then Items 28, 29, 32, etc. must be for traffic in one direction only).

If a ramp is adjacent to the through lanes approaching the structure, it shall be included in the approach roadway width. The total approach roadway width for the example above is 94 feet (a code of 094).

Item 33 — Bridge Median Card 04 1 Digit **(SR)**

Indicate with a 1-digit code if the median is nonexistent, open or closed. All bridges that carry either 1-way traffic or 2-way traffic separated only by centerline will be coded 0 for no median.

Code	Description
0	No median
1	Open Median
2	Closed Median (No Barrier)
3	Closed Median with Non-Mountable Barriers

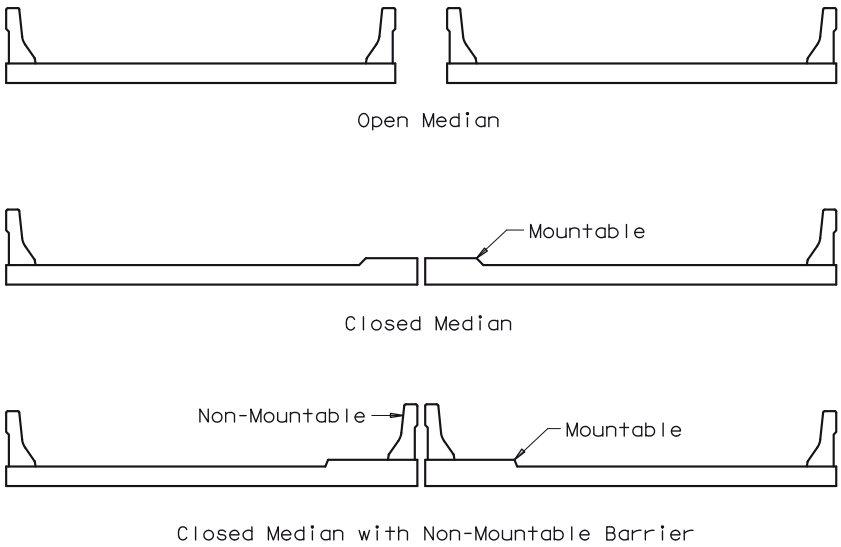

Item 34 — Skew (XX Degrees) Card 04 2 Digits

The skew angle is the angle between the centerline of a pier and a line normal to the roadway centerline. When plans are available, the skew angle can be taken directly from the plans. If no plans are available, the angle is to be field measured if possible. Record the skew angle to the nearest degree. If the skew angle is 0°, it should be so coded. When the structure is on a curve or if the skew varies for some other reason, the average skew should be recorded, if reasonable. Otherwise, record 99 to indicate a major variation in skews of substructure units. A 2-digit number must be coded.

EXAMPLES:

Skew Angle	Code
0°	00
10°	10
8°	08
29°	29

Item 35 — Structure Flared Card 04 1 Digit

Code this item to indicate if the structure is flared (i.e., the width of the structure varies). Generally, such variance will result from ramps converging with or diverging from the through lanes on the structure, but there may be other causes. Minor flares at ends of structures should be ignored.

Code	Description
1	Yes, Flared
0	No Flare

Item 36 — Traffic Safety Features	Card 04	4 Digits	**(SR)**

Bridge inspection shall include the recording of information on the following traffic safety features so that the evaluation of their adequacy can be made.

The data collected shall apply only to the route *on* the bridge. Collision damage or deterioration of the elements are not considered when coding this item.

Item	Description	Length
36 – 1st digit	Bridge Railings	1 Digit
36 – 2nd digit	Transitions	1 Digit
36 – 3rd digit	Approach Guardrail	1 Digit
36 – 4th digit	Approach Guardrail Ends	1 Digit

1st digit *Bridge railings:* Some factors that affect the proper functioning of bridge railing are height, material, strength, and geometric features. Railings must be capable of smoothly redirecting an impacting vehicle. Bridge railings should be evaluated using the ***AASHTO Standard Specifications for Highway Bridges*** as a guide for establishing a currently acceptable standard.

2nd digit *Transitions:* The transition from approach guardrail to bridge railing requires that the approach guardrail be firmly attached to the bridge railing. It also requires that the approach guardrail be gradually stiffened as it comes closer to the bridge railing. The ends of curbs and safety walks need to be gradually tapered out or shielded.

3rd digit *Approach guardrail:* The structural adequacy and compatibility of approach guardrail with transition designs should be determined. Rarely does the need for a barrier stop at the end of a bridge. Thus, an approach guardrail with adequate length and structural qualities to shield motorists from the hazards at the bridge site needs to be installed. In addition to being capable of safely redirecting an impacting vehicle, the approach guardrail must also facilitate a transition to the bridge railing that will not cause snagging or pocketing of an impacting vehicle. Acceptable guardrail design suggestions are contained in the ***AASHTO Guide for Selecting, Locating, and Designing Traffic Barriers.***

4th digit *Approach guardrail ends:* As with guardrail ends in general, the ends of approach guardrails to bridges should be flared, buried, made breakaway, or shielded. Design treatment of guardrail ends is given in the ***AASHTO Guide for Selecting, Locating, and Designing Traffic Barriers.***

The reporting of these features shall be as follows:

Code	Description
0	Inspected feature does not meet currently acceptable standards or a safety feature is required and none is provided.*
1	Inspected feature meets currently acceptable standards.*
N	Not applicable or a safety feature is not required*

* Until a national set of standards is approved, it shall be the responsibility of the inspecting authority to determine what are acceptable standards and what are not.

EXAMPLE:

Description	Code
All features meet currently acceptable standards except transition	1011

Item 37 — Historical Significance Card 04 1 Digit

The historical significance of a bridge involves a variety of characteristics: The bridge may be a particularly unique example of the history of engineering; the crossing itself might be significant; the bridge might be associated with a historical property or area; or historical significance could be derived from the fact the bridge was associated with significant events or circumstances. Use one of the following codes:

Code	Description
1	Bridge is on the National Register of Historic Places. (Listing provided by the Historic Preservation Office).
2	Bridge is eligible for the National Register of Historic Places. (Not used unless specifically instructed).
3	Bridge is at least 40 years old and meets one or more of the following qualifications: • Is a pin-connected or otherwise unique truss, a suspension bridge, an arch bridge, or is made of cast iron. • Demonstrates unique architectural or engineering design, or artistic embellishment such as cast iron or steel finials and fretwork, or elaborate concrete form work. • Is a "one of a kind" design.
4	Historical significance is not determinable at this time, but is at least 40 years old.
5	Bridge is not eligible for the National Register of Historic Places, or is not 40 years old.

Item 38 — Navigation Control Card 04 1 Digit

Indicate for this item whether or not navigation control (a bridge permit) is required. Use one of the following codes:

Code	Description
N	Not applicable, no waterway
0	No navigation control on waterway (bridge permit not required)
1	Navigation control on waterway (bridge permit required)

Item 39 — Navigation Vertical Clearance (XXX feet) Card 04 3 Digits

If Item 38 — Navigation Control has been coded 1, record in feet the minimum vertical clearance imposed at the site, as measured above a datum that is specified on a navigation permit issued by a control agency. The measurement shall be coded as a 3-digit number rounded down to the nearest foot. This measurement will show the clearance that is allowable for navigational purposes. In the case of a swing or bascule bridge, the vertical clearance shall be measured with the bridge in the closed position (i.e., open to vehicular traffic). The vertical clearance of a vertical lift bridge shall be measured with the bridge in the raised or open position. Also, Item 116 — Minimum Navigation Vertical Clearance Vertical Lift Bridge shall be coded to provide clearance in a closed position. If Item 38 — Navigation Control has been coded 0 or N, code 000 to indicate not applicable.

EXAMPLES:

Measured Vertical Clearance	Code
150.0	150
20.6	020
24.2	024

Item 40 — Navigation Horizontal Clearance (XXXX feet) Card 04 4 Digits

If Item 38 — Navigation Control has been coded 1, record for this item the minimum horizontal clearance in feet. This measurement should be that shown on the navigation permit and may be less than the structure allows. If a navigation permit is required, but not available, use the minimum horizontal clearance between fenders, if any, or the clear distance between piers or bents. Code the clearance as a 4-digit number. Code 0000 if Item 38 — Navigation Control is coded 0 or N.

EXAMPLES:

Horizontal Clearance	Code
95 feet	0095
538 feet	0538
1,200 feet	1200

Item 41 — Structure Open, Posted, or Closed to Traffic Card 04 1 Digit **(SR)**

This item provides information about the actual operational status of a structure. The field review could show that a structure is posted, but Item 70 — Bridge Posting may indicate that posting is not required. This is possible and acceptable coding since Item 70 is based on the operating stress level, and the governing agency's posting procedures may specify posting at some stress level less than the operating rating. One of the following codes shall be used:

Code	Description
A	Open, no restriction
B	Closing or posting recommended, but not legally implemented (all signs not in place). See *Note*
D	Open, would be posted or closed except for temporary shoring, etc., to allow for unrestricted traffic
E	Open, temporary structure in place to carry legal loads while original structure is closed and awaiting replacement or rehabilitation.
G	New structure not yet open to traffic
K	Bridge closed to all traffic See below for other needed coding.
P	Posted for load (may include other restrictions)
R	Posted for other load-capacity restriction (speed, number of vehicles on bridge, etc.)
U	Under construction or rehabilitation not covered by routine inspection

Note: When the load rating calculation requires a change to a lower posting, use B in this item until the signs are replaced. Code the new lower loading requirements in Items 41.1 and 41.2 as well.

Item 41.1 — Loading Restriction Card 04 1 Digit

Code the load restriction present on the day of inspection using the following codes:

3	Load Restricted to Gross Loading and Single or Tandem Axle
4	Other Loading Restrictions
5	Load Restricted to Tandem Axle
6	Load Restricted to Single Axle or Tandem Axle
9	Load Restricted to Gross Load Only
N	Not Applicable

Item 41.2 — Load Restriction in Thousands Of Pounds Card 04 3 Digits

Code the load restriction present on the day of inspection to the nearest (1000) one thousand pounds. Round down for fractions. Gross load restrictions will govern over axle load restrictions. Code NNN if not applicable.

EXAMPLE:

Load Restriction	Code
40,000 pounds	040
16,000 pounds	016
6,000 pounds	006

Following also to be updated for Closed Bridges:
Item 41 = K
Item 41.1 = N
Item 41.2 = NNN
Item 64.2 = "00"
Item 66.2 = "00"
Item 70 = "0"

Item 42 — Type of Service Card 04 2 Digits **(SR)**

The type of service on the bridge and under the bridge is indicated by a 2-digit code composed of two parts.

Item	Description	Length
42 – 1st digit	Type of service on bridge	1 Digit
42 – 2nd digit	Type of service under bridge	1 Digit

The first digit indicates the type of service "on" the bridge and shall be coded using one of the following codes:

1st Digit Code	Description
1	Highway (highway stream crossing, highway grade separation; not an interchange with ramps)
2	Railroad
3	Pedestrian exclusively
4	Highway-railroad, with or without ramps
5*	Highway-pedestrian, with or without ramps
6	Overpass structure at an interchange or second level of a multilevel interchange
7	Third level (interchange)
8	Fourth level (interchange)
9	Building or plaza
0	Other

*Note: If a code of 5 is used, the pedestrian uses must be protected from traffic.

The second digit indicates the type of service "Under" the bridge or through the tunnel and shall be coded using one of the following codes:

2ndDigit Code	Description
1	Highway, with or without pedestrian
2	Railroad
3	Pedestrian exclusively
4*	Highway-railroad
5	Waterway
6*	Highway-waterway
7	Railroad-waterway
8*	Highway-waterway-railroad
9	Relief for waterway
0	Other

*Note: Bridges with turnarounds shall not be included in the coding for highway under the bridge when the main purpose of the structure is to cross a stream or railroad.

Item 43 — Structure Type

Item 43.1 — Main Span Card 04 4 Digits **(SR)**

Coding for this item(s) is derived from the following tables. For those cases where a bridge structure has been widened, the type describing the original structure is coded. If not applicable, as for a culvert, tunnel or ferry, all four digits are left blank.

1st Digit	SPAN TYPE	2nd Digit	ROADWAY TYPE
1	Simple Span	1	Deck
2	Continuous	2	Through
3	Cantilever	3	Part Through
4	Cantilever w/ Suspended Span	4*	Combination 1 & 2
5	Arch	5*	Combination 1 & 3
6	Rigid Frame	6*	Combination 2 & 3
7	Movable	7*	Combination 1,2 & 3
8	Suspension or Stayed	9*	Other
9	Other		

*Not normally applicable to Span Type 1

Note: Conversion to FHWA 3-digit span code is used in the Sufficiency Rating.

3rd & 4th Digits — MEMBER TYPE

01	Weathering Steel (WS) I-Beam
02	WS Plate Girder — Multiple
03	WS Plate Girder, Var. Depth — Multiple
04	WS Plate Girder w/Floor System
05	WS Box Girder — Multiple
06	WS Box Girder — Single or Spread
08	WS Orthotropic Plate Girder
09	WS Other
11	Steel I-Beam
12	Plate Girder — Multiple
13	Plate Girder, Var. Depth — Multiple
14	Plate Girder w/Floor System
15	Steel Box Girder — Multiple
16	Steel Box Girder — Single or Spread
17	Steel Channel Beam
18	Steel Orthotropic Plate Girder
19	Other Steel
21	Concrete Girder — Tee Beam
22	Concrete Girder, Var. Depth — Tee Beam
23	Concrete Box Girder — Multiple
24	Concrete Box Girder — Single or Spread
25	Concrete Slab & Girder — Pan Formed
26	Concrete Flat Slab
27	Concrete Slab — Variable Depth
28	Concrete Arch, Open Spandrel
29	Other Concrete
30	Segmental Box Girder
31	PS Concrete Girder — Multiple
32	PS Concrete Girder — w/Floor System
33	PS Concrete Box Girder — Multiple
34	PS Concrete Box Girder — Single or Spread
35	PS Concrete Slab & Girder — Pan Formed
36	PS Concrete Slab — Full Depth
37	PS Concrete Slab — Partial Depth
38	PS Concrete — U-beam
39	Other Prestressed Concrete
41	Timber Stringers — Multiple
42	Timber Girder W/Floor System
43	Timber Truss
49	Other Timber

51	Metal Arch
52	Other Metal
53	Masonry Arch
54	Movable, Vertical Lift
55	Movable, Bascule
56	Movable, Horizontal Swing
57	Movable, Other
59	Other Than Metal Truss or Other Metal
61	Pratt Truss, Parallel Chord
62	Pratt Truss, Half-Hip, Parallel Chord
63	Warren Truss, Parallel Chord
64	Warren Quadrangular Truss, Parallel Chord
65	Baltimore Truss, Parallel Chord
66	K Truss, Parallel Chord
67	Whipple Truss, Parallel Chord
68	Bedstead Truss, Parallel Chord
71	Parker Truss, Polygonal Top Chord
72	Camelback Truss, Polygonal Top Chord
73	Pennsylvania Truss, Polygonal Top Chord
74	K Truss, Polygonal Top Chord
75	Warren Truss, Polygonal Top Chord
76	Bowstring Truss, Polygonal Top Chord
77	Lenticular Truss, Polygonal Top Chord
78	Whipple Truss, Polygonal Top Chord
79	Pegram Truss, Polygonal Top Chord
81	Howe Truss, Parallel Chord
82	Post Truss, Parallel Chord
83	King Post or Waddell “A” Truss
84	Queen Post Truss, Parallel Chord
85	Bollman Truss, Parallel Chord
86	Fink Truss, Parallel Chord
87	Fink-Stearns Truss, Parallel Chord
88	Kellog Truss, Parallel Chord
89	Pratt-Greiner Truss, Parallel Chord
91	Continuous Truss
92	Wichert Continuous Truss
93	Vierendell Truss
97	Other Truss, Parallel Chord
98	Other Truss, Polygonal Top Chord

EXAMPLES:

Code	Description
1126	Simple Span Concrete Flat Slab
1363	Warren Pony Truss, Parallel Chord
2112	Continuous Steel Deck Plate Girder, Multiple
6129	Concrete Rigid Frame
5129	Closed Spandrel Concrete Arch
1271	Parker Through Truss
5153	Masonry Arch
1125	Simple Span Concrete Pan Girder
7254	Movable Vertical Lift
8214	Cable Stayed Girder w/Floor System
1261	Pratt Through Truss

Item 43.2 — Structure Type, Major Approach Spans	Card 04	4 Digits

Coding for this item is derived from the codes under Item 43.1. Approach spans are those spans in a bridge which are of a different structure type or material from that of the main spans. Utilizing these same distinctions, the approach spans should be considered in two categories, major and minor, with the major approach spans usually being those immediately adjacent to the main spans.

Main spans are those of greatest length within a bridge and are normally at the center of the feature being crossed. Major approach spans are those spans of a different type, or of the same type but 75 percent or less than the length of the longest main span and are normally at one or both ends of the main spans. Minor approach spans are either a different type from the main and major approach spans, or 75 percent or less than the length of the longest major approach span.

Item 43.3 — Structure Type, Minor Approach Spans	Card 04	4 Digits

Coding for this item is derived from the codes under Item 43.1, and will apply to minor approach spans as described in Item 43.2. This item is left blank if not applicable, as would be the case where no distinctions could be made between major and minor approach spans.

Item 43.4 — Structure Type, Culvert	Card 04	2 Digits	**(SR)**

Coding for culverts is derived from the following table. Where the bridge is other than a culvert, this item is left blank.

1st Digit —	SPAN TYPE
1	Single Box
2	Multiple Box
3	Single Pipe
4	Multiple Pipe
9	Other

2nd —	MAIN MEMBER TYPE
1	Steel
2	CGM
3	Concrete
4	Timber
5	Masonry
6	Aluminum, Wrought Iron, Or Cast Iron
7	Precast/Prestressed
9	Other

Item 43.5 — Structure Type, Tunnel	Card 04	1 Digit

Coding for tunnels is derived from the following table. Where the structure is other than a tunnel, this Item is left blank.

Code	Description	Code	Description
1	Steel	5	Timber
2	CGM	6	Masonry
3	Concrete	7	Tunnel in rock
4	Concrete, prestressed	9	Other

Item 44.1 — Substructure Type, Main Spans	Card 04	3 Digits
Item 44.2 — Substructure Type, Major Approach Spans	Card 04	3 Digits
Item 44.3 — Substructure Type, Minor Approach Spans	Card 04	3 Digits

Items 44.1, 44.2 and 44.3 pertain to intermediate supports only, to the exclusion of abutments, and are not applicable to culverts or tunnels. Where a main span shares an intermediate support with an approach span, the support is coded under Item 44.1. Where a major approach span shares an intermediate support with a minor approach span, the support is coded under Item 44.2. Where a structure has no intermediate supports, this item, as well as 44.2 and 44.3, is left blank. Coding is derived from the following tables:

1st Digit — ABOVE GROUND		2nd Digit — BELOW GROUND		3rd Digit — BENT CAP	
1	Pile Bents	1	Steel Piling	1	Concrete
2	Single Column Bent*	2	Concrete Piling (including steel shell concrete piling)	2	Steel
3	Multiple Column Bent*	3	Timber Piling	3	Timber
4	Concrete Column Bent with Tie Beam*	4	Drilled Shafts	4	Masonry
5	Concrete Column Bent Wall*	5	Spread Footing	9	Other
6	Concrete Pier	6	Pile Cap on Steel Piling		Leave blank if no bent cap if no applicable
7	Masonry Pier	7	Pile Cap on Concrete Piling		
8	Trestle (steel, concrete or timber)	8	Pile Cap on Timber Piling		
9	Other	9	Other		

*Could be above ground portions of drilled shafts

Item 45.1 — Number of Main Spans Card 05 3 Digits

The number of main spans in the bridge is entered for this item. If the bridge is a culvert, this item contains the number of boxes in the culvert. This item is left blank for tunnels.

Item 45.2 — Number of Major Approach Spans Card 05 3 Digits

The total number of major approach spans in the bridge is entered in this item. Note that spans of this type may lie on one or both sides of the main span or spans. This item, as well as 45.3, is not applicable to culverts or tunnels and, in such cases, is left blank.

Item 45.3 — Number of Minor Approach Spans Card 05 3 Digits

The number of minor approach spans in the bridge, plus any additional spans not counted in Items 45.1 or 45.2, is entered for this item. Note that spans of this type may lie on one or both ends of the structure. Tunnels and culverts are not applicable and should be left blank.

Item 46 — Total Number of Spans Card 05 4 Digits

The total number of spans in the bridge is entered for this item. This number is the sum of the entries in Items 45.1, 45.2 and 45.3. If the bridge is a culvert, the number of boxes contained therein is coded in this item. This item is coded zero for a tunnel or if otherwise not applicable.

Item 47 — Inventory Route, Total Horizontal Clearance (XXX.X feet) Card 05 4 Digits

The total horizontal clearance for the inventory route identified in Item 5 should be measured and recorded. The clearance should be the available clearance measured between the restrictive features – curbs, rails, walls, or other structural features limiting the roadway (surface and shoulders). The measurement should be recorded and coded to the nearest tenth of a foot (with an assumed decimal point).

The purpose of this item is to give the largest available clearance for the movement of wide loads. This clearance has been identified in 3 ways; use the most applicable:

1. Roadway surface and shoulders.
2. Distance from face of pier (or rail around pier).
3. Include flush or mountable medians, but not raised medians. For a raised or non-mountable median, code the greater of the restricted widths in either direction, not both directions.

The minimum code is 008.0; the maximum is 999.9.

EXAMPLES:

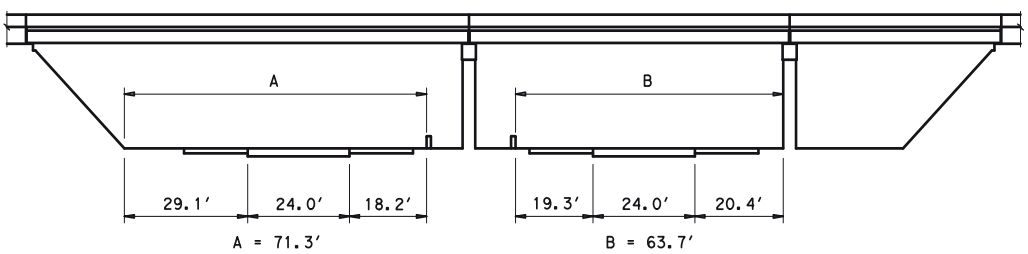

Clearance A > B Item 47 = A

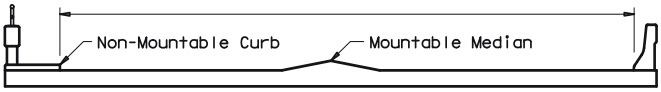

No Median or Flush or Mountable Median

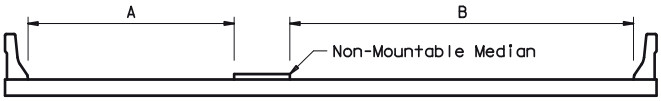

Raised Median or Non-Mountable Median
B > A Item 47 = B

Item 47A — Intersecting Route Horizontal Clearance (XXX.X feet) Card 11 4 Digits

With an assumed decimal point, enter the horizontal clearance of the intersecting route to the nearest tenth foot. See Item 47 for examples.

Item 48 — Length of Maximum Span (XXXX feet) Card 05 4 Digits

The length of the maximum span shall be coded. The center-to-center distance between piers, bents, or abutments shall be coded as the maximum span length. The measurement shall be along the centerline of the bridge. For this item, code a 4-digit number to represent the measurement to the nearest foot. For culverts, this item applies to the largest box.

EXAMPLES:

Length of Maximum Span	Code
50 feet	0050
117 feet	0117
1,050 feet	1050

Item 49 — Structure Length (XXXXXX feet) Card 05 6 Digits **(SR)**

Record and code a 6-digit number to represent the length of the structure to the nearest foot. This shall be the length of roadway which is supported on the bridge structure. The length should be measured back to back of backwalls of abutments or from paving notch to paving notch.

Culvert lengths should be measured along the center line of roadway, regardless of their depth below grade. Measurement should be made between outside faces of exterior walls.

EXAMPLES:

Structure Length	Code
50 feet	000050
5,421 feet	005421
333 feet	000333
101,235 feet	101235

EXAMPLES:

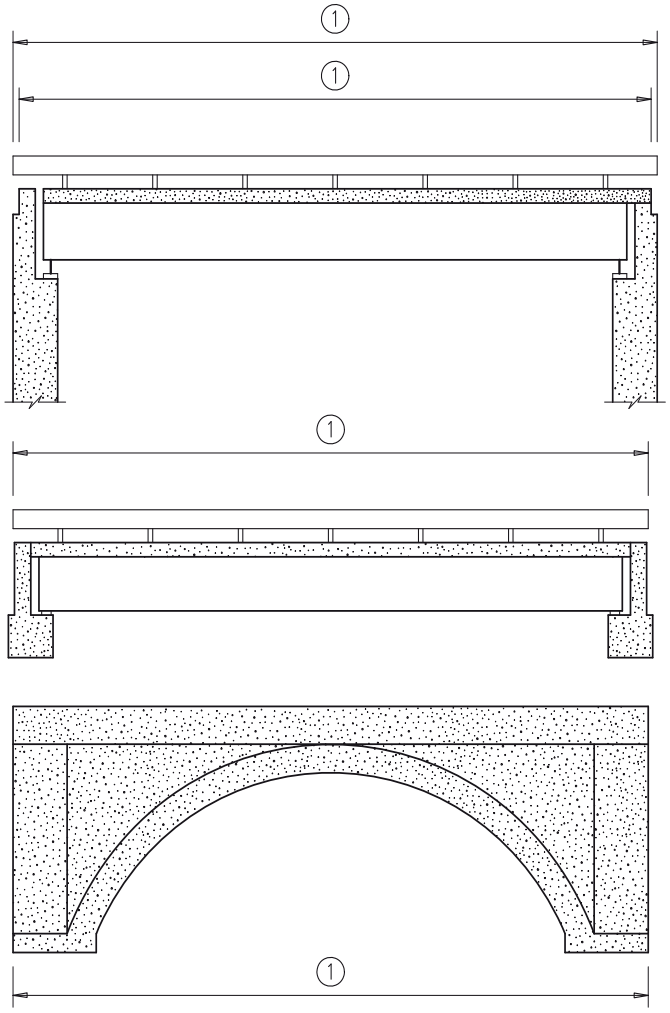

1 ITEM 49 – STRUCTURE LENGTH

EXAMPLE:

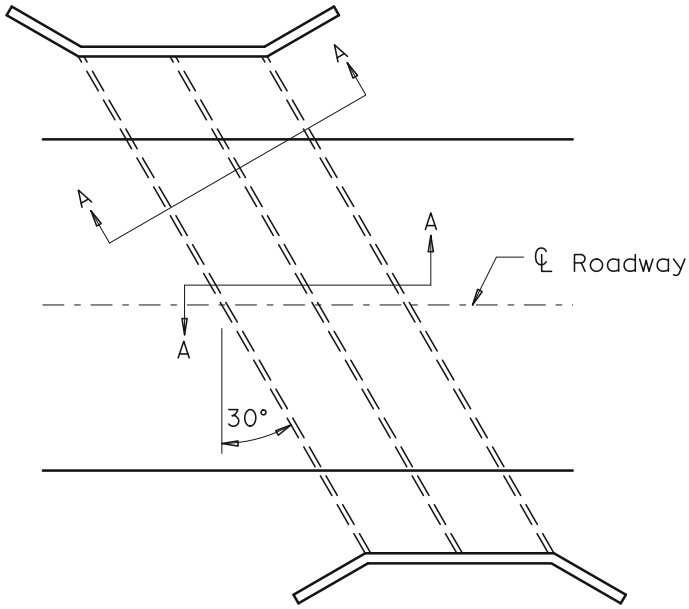

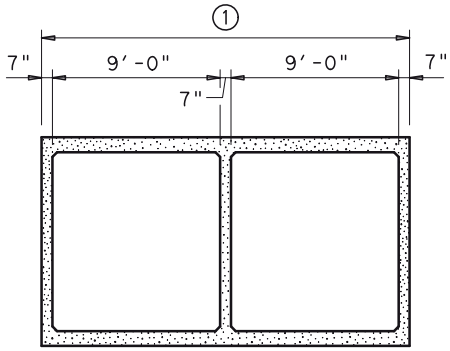

3 x 7" walls = 1.750'
L = NBIS Bridge Length

Section A-A

1 2 ~ 9.000' BBLS = 18.000' + 1.750' = 19.750'

$$\text{Item 49} \sim \frac{L}{\text{Cos } 30°} = \frac{19.750'}{.86603'} = 22.805' \text{ along ℄ (outside to outside)}$$

Item 49 = 000023

Item 50 — Sidewalk Widths (XX.X feet, XX.X feet) Card 07 6 Digits

Record and code two 3-digit numbers to represent the widths of the left and right sidewalks to the nearest tenth of a foot (with assumed decimal points). This is a 6-digit number composed of 2 segments, with the left-most 3 digits representing the left sidewalk and the right-most 3 digits representing the right sidewalk. "Left" and "Right" should be determined on the basis of direction of the inventory. If sidewalks are less than 1.5 feet (18 inches), code 000.

Segment	Description	Length
50.1	Left sidewalk width	3 Digits
50.2	Right sidewalk width	3 Digits

EXAMPLES:

	Left Side	Right Side	Code
Sidewalk	None	8.3'	000083
	10.0	4.1'	100041
	8.3'	None	083000
	12.1'	11.5'	121115
	None	None	000000
	0.6'	1.5'	00001

EXAMPLES:

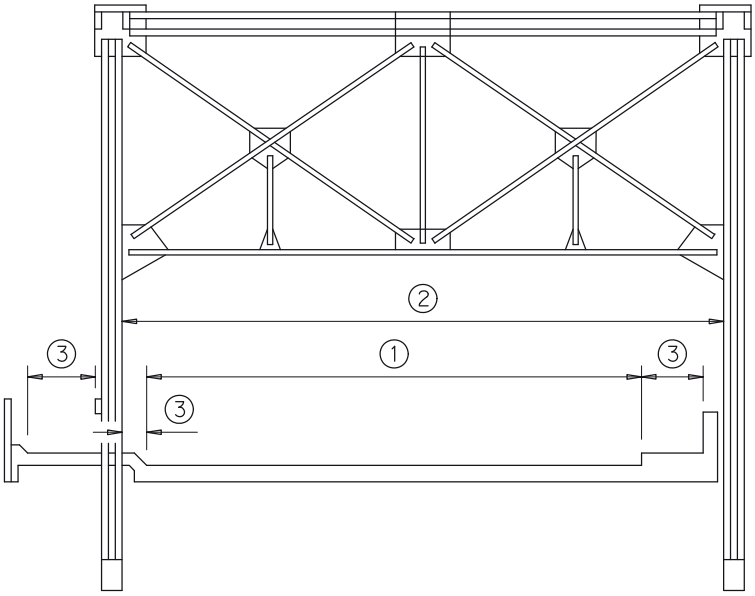

1 Item 51 ~ Bridge Roadway Width, Curb-to-Curb

2 Item 52 ~ Deck Width, Out-to-Out

3 Item 50 ~ Sidewalk Width

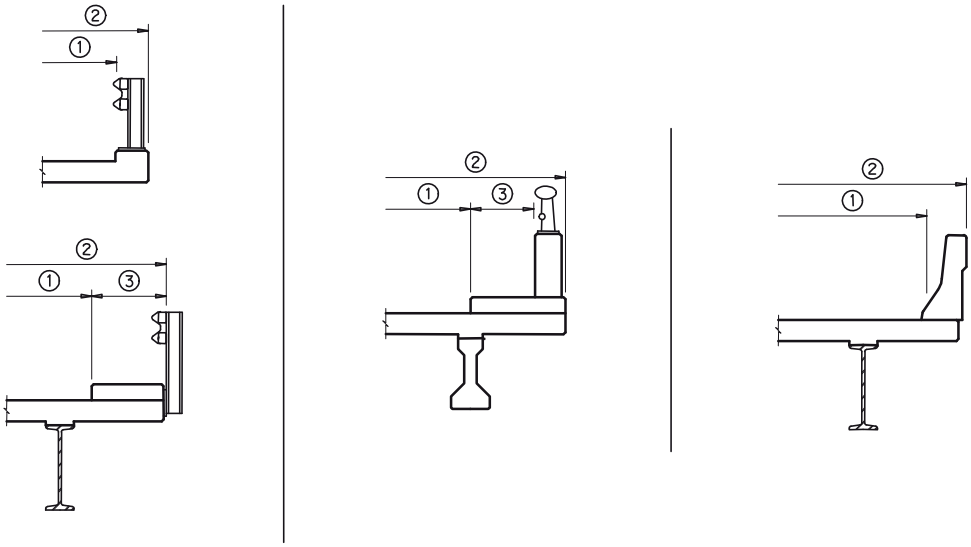

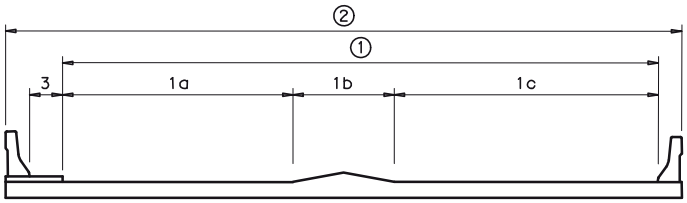

① = 1a + 1b + 1c

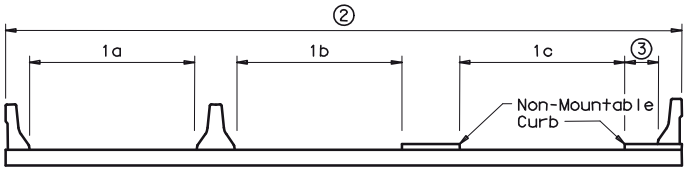

① = 1a + 1b + 1c

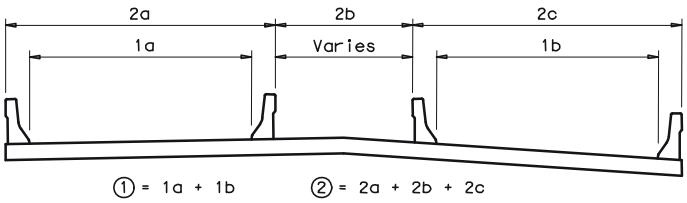

① = 1a + 1b ② = 2a + 2b + 2c

① Item 51 ~ Bridge Roadway Width, Curb to Curb

② Item 52 ~ Deck Width, Out to Out

③ Item 50 ~ Sidewalk Width

Item 51 - Bridge Roadway Width, Curb-to-Curb (XXX.X feet) Card 05 4 Digits **(SR)**

The information to be recorded is the most restrictive minimum distance between curbs or rails on the structure roadway. For structures with closed medians, coded data will be the sum of the most restrictive minimum distances for all roadways carried by the structure. The data recorded for this item must be compatible with other related route and bridge data (i.e., Items 28, 29, 32, etc.). The measurement should be exclusive of flared areas for ramps. A 4-digit number should be used to represent the distance to the nearest tenth of a foot (with an assumed decimal point). See examples.

Where traffic runs directly on the top slab (or wearing surface) of a culvert-type structure, e.g., an R/C box without fill, code the actual roadway width (curb-to-curb or rail-to-rail). This will also apply where the fill is minimal (2 feet or less) and headwalls or parapets affect the flow of traffic.

Where the roadway is on fill more than 2 feet deep carried across a structure and the headwalls or parapets do not affect the flow of traffic, code 0000. This is considered proper inasmuch as a filled section simply maintains the roadway cross-section. Item 51 will be coded 0000 for non-vehicular underpasses, also.

EXAMPLES:

Bridge Roadway Width	Code
36.00' wide	0360
66.37' wide	0664
110.13' wide	1101

The last example above would be the coded value for the deck section shown below

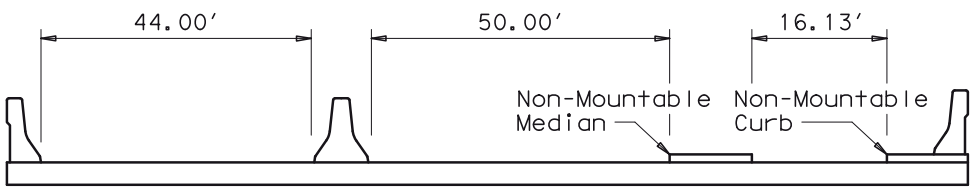

Item 52 — Deck Width, Out-to-Out (XXX.X feet) Card 05 4 Digits

Record and code a 4-digit number to show the out-to-out width to the nearest tenth of a foot (with an assumed decimal point). If the structure is a through structure, the number to be coded will represent the lateral clearance between superstructure members. The measurement should be exclusive of flared areas for ramps. See example on page 30. For a non-vehicular traffic underpass, code 0000.

Where traffic runs directly on the top slab (or wearing surface) of the culvert, e.g., an R/C box without fill, code the actual width (out-to-out). This will also apply where the fill is minimal and the culvert headwalls affect the flow of traffic.

Where the roadway is on a fill of 2 feet or more carried across a structure, and where the culvert headwalls do not affect the flow of traffic, code 0000. This is considered proper inasmuch as a filled section over a culvert simply maintains the roadway cross-section.

Item 53 — Minimum Vertical Clearance Over Bridge Deck (XX feet, XX inches) Card 05 4 Digits **(SR)**

This item records the actual minimum vertical clearance to any superstructure restriction over the bridge deck, including shoulders, rounded down to the nearest inch. When no superstructure restriction exists above the bridge deck, code 9999. When a restriction is 100 feet or greater, code 9912. A 4-digit number should be coded to represent feet and inches.

Deck Geometry Rating Code	Minimum Vertical Clearance			
	Functional Class			
	Interstate and Other Freeways		Other Principal and Minor Arterials	Major and Minor Collectors and Locals
	All Routes- Except as Noted for Urban Areas	Undesignated Routes, Urban Areas*		
9	>17’-0”	>16’-6”	>16’-6”	>16’-6”
8	17”-0”	16’-6”	16’-6”	16’-6”
7	16’-9”	15’-6”	15’-6”	15’-6”
6	16’-6”	14’-6”	14’-6”	14’-6”
5	15’-9”	14’-3”	14’-3”	14’-3”
4	15’-0”	14’-0”	14’-0”	14’-0”
3	Vertical clearance less than value in rating code of 4 and requiring corrective action.			
2	Vertical clearance less than value in rating code of 4 and requiring replacement.			
0	Bridge closed.			

EXAMPLES:

Minimum Vertical Clearance	Code
17'-3"	1703
75'-11"	7511
No restriction	9999
115'-6"	9912

Item 54 — Minimum Vertical Underclearance (X code, XX feet, XX inches) Card 05 5 Digits **(SR)**

Using a 1-digit code and a 4-digit number, record and code the minimum vertical clearance from the roadway or railroad track *beneath* the structure to the underside of the superstructure. (When both a railroad and highway are under the structure, code the most critical dimension and identify it by the Reference Feature Code.)

Segment	Description	Length
54.1	Reference Feature	1 Digit
54.2	Minimum Vertical Under clearance	4 Digits

Using one of the codes below, code in the first position the reference feature from which the clearance measurement is taken:

Code	Description
H	Highway beneath structure
R	Railroad beneath structure
N	Feature not a highway or railroad

In the next 4 positions, code a 4-digit number to represent the minimum vertical clearance from that feature to the structure. If the feature is not a highway or railroad, code the minimum vertical clearance 0000.

EXAMPLES:

	Code
River beneath structure	N0000

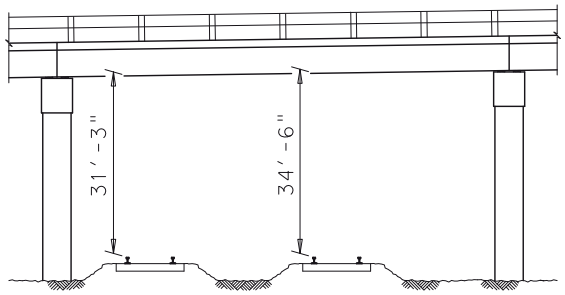

Railroad 31'-3" beneath Structure

Description	Code
Railroad 31 ft 3 in. beneath structure	R3103

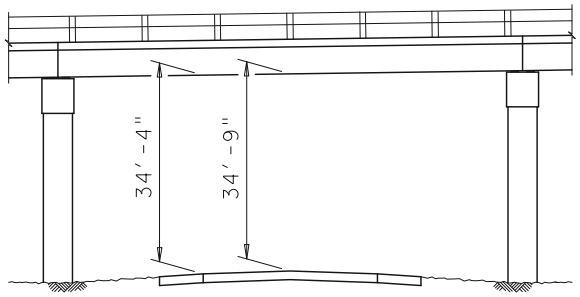

Highway 34'-4" beneath Structure

Description	Code
Highway 34 ft 4in. beneath structure	H3404

Item 55 — Minimum Lateral Underclearance on Right (X code, XX.X feet) Card 05 4 Digits **(SR)**

Using a 1-digit code and a 3-digit number, record and code the minimum lateral underclearance on the right to the nearest tenth of a foot (with an assumed decimal point). When both a railroad and highway are under the structure, code the most critical dimension.

Segment	Description	Length
55.1	Reference Feature	1 Digit
55.2	Minimum Lateral Underclearance	3 Digits

Using one of the codes below, code in the first position the reference feature from which the clearance measurement is taken:

Code	Description
H	Highway beneath structure
R	Railroad beneath structure
N	Feature not a highway or railroad

In the 55.2 positions, code a 3-digit number to represent the minimum lateral underclearance on the right. The lateral clearance should be measured from the right edge of the roadway (excluding shoulders) or from the centerline (between rails) of the right-hand track of a railroad to the nearest substructure unit (pier, abutment, etc.), to a rigid barrier, or to the toe of slope steeper than 3 to 1. The clearance measurements to be recorded will be the minimum after measuring the clearance in *both* directions of travel. In the case of a dual highway this would mean the outside clearances of both roadways should be measured and the smaller distance recorded and coded.

If two related features are below the bridge, measure both and record the lesser of the two. An explanation should be written as to what was recorded. If the feature beneath the structure is not a railroad or highway, code 999 to indicate not applicable.

The presence of ramps is not considered in this item; therefore, the minimum lateral clearance on the right should be measured from the right edge of the through roadway.

EXAMPLES:

	Code
Railroad 20.4' centerline to pier	R204
Highway 20.2' edge of pavement to pier	H202
Creek beneath structure	N999

EXAMPLES:

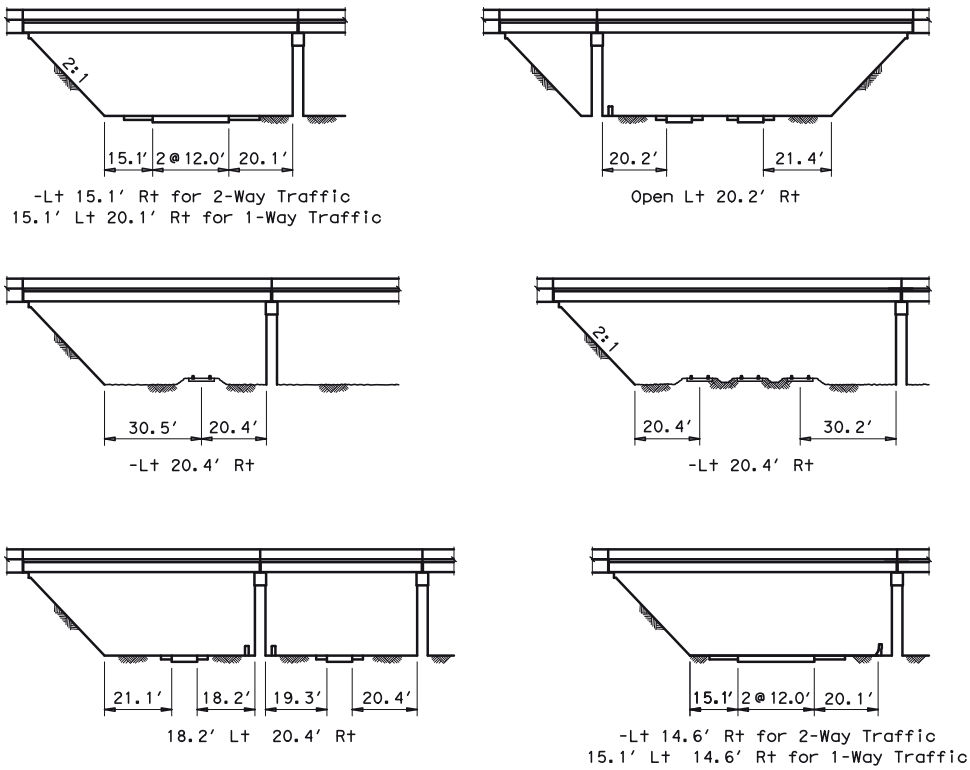

Item 56 — Minimum Lateral Underclearance on Left (XX.X feet) Card 05 3 Digits **(SR)**
(for divided highway, 1-way streets, and ramps;
not applicable to railroads)

Using a 3-digit number, record and code the minimum lateral underclearance on the left (median side for divided highways) to the nearest tenth of a foot (with an assumed decimal point). The lateral clearance should be measured from the left edge of the roadway (excluding shoulders) to the nearest substructure unit, to a rigid barrier, or to the toe of slop steeper than 3 to 1. Refer to examples under Item 55 — Minimum Lateral Underclearance on Right.

In the case of a dual highway, the median side clearances of both roadways should be measured and the smaller distance recorded and coded. If there is no obstruction in the median area, a notation of "open" should be recorded and 999 should be coded. For clearances greater than 99.8 feet, code 998. Code 000 to indicate not applicable.

In order to promote uniformity between bridge inspectors, these guidelines will be used to rate and code Items 58, 59, 60, and 65. Items 61 and 62 have their own coding guidelines.

Condition ratings are used to describe the existing, in-place bridge as compared to the as-built condition. Evaluation is for the materials related, physical condition of the deck, superstructure, and substructure components of a bridge. The condition evaluation of channels and channel protection and of culverts is also included. Condition codes are *properly used* when they provide an overall *characterization* of the general condition of the *entire component* being rated. Conversely, they are *improperly used* if they attempt to describe *localized* or nominally occurring instances of deterioration or disrepair. Correct assignment of a condition code must, therefore, consider both the severity of the deterioration or disrepair and the extent to which it is widespread throughout the component being rated.

The load-carrying capacity will not be used in evaluating condition items. The fact that a bridge was designed for less than current legal loads and may be posted shall have no influence upon condition ratings.

Portions of bridges that are being supported or strengthened by temporary members will be rated based on their actual condition; that is, the temporary members are not considered in the rating of the item. (See Item 103 — Temporary Structure Designation for the definition of a temporary bridge.)

Completed bridges *not yet* opened to traffic, if rated, shall be coded as if open to traffic.

The following general condition ratings shall be used as a guide in evaluating Items 58, 59, 60, and 65:

Code	Description
N	NOT APPLICABLE
9	EXCELLENT CONDITION
8	VERY GOOD CONDITION — no problems noted.
7	GOOD CONDITION — some minor problems.
6	SATISFACTORY CONDITION — structural elements show some minor deterioration.
5	FAIR CONDITION — all primary structural elements are sound but may have minor section loss, cracking, spalling or scour.
4	POOR CONDITION — advanced section loss, deterioration, spalling or scour.
3	SERIOUS CONDITION — loss of section, deterioration, spalling or scour have seriously affected primary structural components. Local failures are possible. Fatigue cracks in steel or shear cracks in concrete may be present.
2	CRITICAL CONDITION — advanced deterioration of primary structural elements. Fatigue cracks in steel or shear cracks in concrete may be present or scour may have removed substructure support. Unless closely monitored it may be necessary to close the bridge until corrective action is taken.
1	"IMMINENT" FAILURE CONDITION — major deterioration or section loss present in critical structural components or obvious vertical or horizontal movement affecting structure stability. Bridge is closed to traffic but corrective action may put back in light service.
0	FAILED CONDITION — out-of-service beyond corrective action.

Item 58 — Deck	Card 06	1 Digit	**(SR)**

This item describes the overall condition rating of the deck. Rate and code the condition in accordance with the above general condition ratings. *Code N for all culverts.*

Concrete decks should be inspected for cracking, scaling, spalling, leaching, chloride contamination, potholing, delamination, and full or partial depth failures. Steel grid decks should be inspected for broken welds, broken grids, section loss, and growth of filled grids from corrosion. Timber decks should be inspected for splitting, crushing, fastener failure, and deterioration from rot.

The condition of the wearing surface/protective system, joints, expansion devices, curbs, sidewalks, parapets, fascias, bridge rail, and scuppers shall not be considered in the overall deck evaluation. However, their condition should be noted on the inspection form.

Decks integral with the superstructure will be rated as a deck only and not how they may influence the superstructure rating (for example, rigid frame, slab, deck girder or T-beam, voided slab, box girder, etc.). Similarly, the superstructure of an integral deck-type bridge will not influence the deck rating.

Item 59 — Superstructure	Card 06	1 Digit	**(SR)**

This item describes the physical condition of all structural members. Rate and code the condition in accordance with the previously described general condition ratings. *Code N for all culverts.*

The structural members should be inspected for signs of distress which may include cracking, deterioration, section loss, and malfunction and misalignment of bearings.

On bridges where the deck is integral with the superstructure, the superstructure condition rating may be affected by the deck condition. The resultant superstructure condition rating may be lower than the deck condition rating where the girders have deteriorated or been damaged.

Fracture critical components should receive careful attention because failure could lead to collapse of a span or the bridge.

Item 60 — Substructure	Card 06	1 Digit	**(SR)**

This item describes the physical condition of piers, abutments, piles, fenders, footings, or other components. Rate and code the condition in accordance with the previously described general condition ratings. *Code N for all culverts.*

All substructure elements should be inspected for visible signs of distress including evidence of cracking, section loss, settlement, misalignment, scour, collision damage, and corrosion. The rating factor given to Item 60 should be consistent with the one given to Item 113 whenever a rating factor of 2 or below is determined for Item 113 Scour Critical Bridges..

The substructure condition rating shall be made independent of the deck and superstructure.

Integral-abutment wingwalls to the first construction or expansion joint shall be included in the evaluation. For non-integral superstructure and substructure units, the substructure shall be considered as the portion below the bearings. For structures where the substructure and superstructure are integral, the substructure shall be considered as the portion below the superstructure.

Item 61 — Channel and Channel Protection Card 06 1 Digit

This item describes the physical conditions associated with the flow of water through the bridge such as stream stability and the condition of the channel, riprap, slope protection, or stream control devices including spur dikes. The inspector should be particularly concerned with visible signs of excessive water velocity which may affect undermining of slope protection or footings, erosion of banks, and realignment of the stream which may result in immediate or potential problems. Accumulation of drift and debris on the superstructure and substructure should be noted on the inspection form, but not included in the condition rating.

Rate and code the condition in accordance with the previously described general condition ratings and the following descriptive codes:

Code	Description
N	Not applicable. Use when bridge is not over a waterway
9	There are no noticeable or noteworthy deficiencies which affect the condition of the channel.
8	Banks are protected or well vegetated. River control devices such as spur dikes and embankment protection are not required or are in a stable condition.
7	Bank protection is in need of minor repairs. River control devices and embankment protection have a little minor damage. Banks and/or channel have minor amounts of drift.
6	Bank is beginning to slump. River control devices and embankment protection have widespread minor damage. There is minor stream bed movement evident. Debris is restricting the waterway slightly.
5	Bank protection is being eroded. River control devices and/or embankment have major damage. Trees and brush restrict the channel.
4	Bank and embankment protection is severely undermined. River control devices have severe damage. Large deposits of debris are in the waterway.
3	Bank protection has failed. River control devices have been destroyed. Stream bed aggradations, degradation or lateral movement has changed the waterway to now threaten the bridge and/or approach roadway.
2	The waterway has changed to the extent the bridge is near a state of collapse.
1	Bridge closed because of channel failure. Corrective action may put back in light service.
0	Bridge closed because of channel failure. Replacement necessary.

Item 62 — Culverts Card 06 1 Digit **(SR)**

This item evaluates the alignment, settlement, joints, structural condition, scour, and other items associated with culverts. The rating code is intended to be an overall condition evaluation of the culvert. Integral wingwalls to the first construction or expansion joint shall be included in the evaluation. For a detailed discussion regarding the inspection and rating of culverts, consult Report No. FHWA-IP-86-2, ***Culvert Inspection Manual,*** July 1986.

Item 58 — Deck, Item 59 — Superstructure, and Item 60 — Substructure shall be coded N for all culverts.

Rate and code the condition in accordance with the previously described general condition ratings and the following descriptive codes:

Code	Description
N	Not applicable. *Use if structure is not a culvert.*
9	No deficiencies.
8	No noticeable or noteworthy deficiencies which affect the condition of the culvert. Insignificant scrape marks caused by drift.
7	Shrinkage cracks, light scaling, and insignificant spalling which does not expose reinforcing steel. Insignificant damage caused by drift with no misalignment and not requiring corrective action. Some minor scouring has occurred near curtain walls, wingwalls, or pipes. Metal culverts have a smooth symmetrical curvature with superficial corrosion and no pitting.
6	Deterioration or initial disintegration, minor chloride contamination, cracking with some leaching, or spalls on concrete or masonry walls and slabs. Local minor scouring at curtain walls, wingwalls, or pipes. Metal culverts have a smooth curvature, asymmetrical shape, significant corrosion or moderate pitting.
5	Moderate to major deterioration or disintegration, extensive cracking and leaching, or spalls on concrete or masonry walls and slabs. Minor settlement or misalignment. Noticeable scouring or erosion at curtain walls, wingwalls, or pipes. Metal culverts have significant distortion and deflection in one section, significant corrosion or deep pitting.
4	Large spalls, heavy scaling, wide cracks, considerable efflorescence, or opened construction joints permitting loss of backfill. Considerable settlement or misalignment. Considerable scouring or erosion at curtain walls, wingwalls or pipes. Metal culverts have significant distortion and deflection throughout, extensive corrosion or deep pitting.
3	Any condition described in Code 4, but which is excessive in scope. Severe movement or differential settlement of the segments, or loss of fill. Holes may exist in walls or slabs. Integral wingwalls nearly severed from culvert. Severe scour or erosion at curtain walls, wingwalls or pipes. Metal culverts have extreme distortion and deflection in one section, extensive corrosion, or deep pitting with scattered perforations.
2	Integral wingwalls collapsed, severe settlement of roadway due to loss of fill. Section of culvert may have failed and can no longer support embankment. Complete undermining at curtain walls and pipes. Corrective action required to maintain traffic. Metal culverts have extreme distortion and deflection throughout with extensive perforations due to corrosion.
1	Bridge closed. Corrective action may put back in light service.
0	Bridge closed. Replacement necessary.

See the April 2018 Addendum (pg A-1) for guidance for coding of Item 63.

Item 63 — Method Used to Determine Operating Rating Card 13 1 Digit

~~Use one of the codes below to indicate which load rating method was used to determine the Operating Rating coded in Item 64 for this structure.~~

~~Code~~	~~Description~~
~~1~~	~~Load Factor (LF)~~
~~2~~	~~Allowable Stress (AS)~~
~~3~~	~~Load and Resistance Factor (LRFR)~~
~~4~~	~~Load Testing~~
~~5~~	~~No rating analysis performed~~

Item 64—Operating Rating Card 06 3 Digits

This capacity rating, referred to as the operating rating, will result in the absolute maximum permissible load level to which the structure may be subjected for the vehicle type used in the rating. Code the operating rating as a 3-digit code composed of 2 parts.

Item	Description	Length
64	Type of Loading	1 Digit
64	Gross Loading Tons	2 Digits

This item contains the Operating Rating referred to in Article 4.1 of the ***AASHTO Manual*** and discussed elsewhere in the ***Bridge Inspection Manual***. This Item uses the same codes given in Item 66. The first digit of this item should be the same as the first digit used for Item 66.

Code	Description
1	H Configuration
2	HS Loading
7	Railroad Loading
8	Pedestrian or Special Loading
9	Gross Load Only

The ***AASHTO Manual for Maintenance Inspection of Bridges*** permits the calculation of the inventory and operating ratings by the load factor method.

If the bridge is closed and/or will not carry any live load, the second and third digits shall be coded 00.

The use or presence of a temporary bridge requires special consideration in coding. In such cases, since there is no permanent bridge, Items 64 and 66 should be coded 900 even though the temporary structure is rated for as much as full legal load.

A bridge shored up or repaired on a temporary basis is considered a temporary bridge and the inventory and operating rating should be coded as if the temporary shoring were not in place. See Item 103 — Temporary Structure Designation for definition of a temporary bridge.

EXAMPLES:

Description	Code
HS30	254
Temporary bridge	900
Shored-up bridge	203*
Structure under sufficient fill that live load is insignificant (according to AASHTO design)	299

*Load capacity without shoring.

For load posting of off-system bridges (county road — city streets), see House Bill 1574, Section 9, Chapter 1, Title 116, Article 66674o-2 for additional guidance.

Article 6674o-2. County and Municipal Bridge Inspection.

(a) If the Texas Department of Transportation determines after an inspection that a bridge under the jurisdiction of a county or municipality qualifies for a lower load rating under 23 C.F.R. Sections 650.301–650.311 than is currently permitted, the department shall notify the commissioners court of the county or the governing body of the municipality.

(b) A commissioner's court or governing body that receives notice under Subsection (a) of this article shall post notice on a road or highway approaching the bridge indicating that traffic is restricted consistent with the newer lower rating. The notice must be placed in a location that enables restricted traffic to avoid crossing the bridge.

Item 65 — Roadway Approach Card 06 1 Digit

The approach component includes the embankment within a few hundred feet of the abutments; slope protection for the embankment such as riprap and vegetation; approach slabs or pavement; relief joints between the bridge and roadway pavement (necessary only when the roadway pavement is reinforced concrete); drainage; delineation; and sight distance. For railroad, pedestrian, utility and other such underpasses which carry no automotive traffic, code the approach component, "not applicable." Rate and code the condition in accordance with the previously described general condition ratings.

Examine embankments for slope failures, settlements, movements and excessive erosion. Check for inadequacies of slope protection and drainage. Check for unevenness or settlements of approach slabs or pavements, for cracks where water can enter the embankment soil, and for unsealed or clogged relief joints. Check for damage or deterioration of guard fence and delineators. Check whether the available sight distance has been reduced by vegetation growth or other encroachments.

See the April 2018 Addendum (pg A-1) for guidance for coding of Item 65.1.

Item 65.1 — Method Used to Determine Inventory Rating Card 13 1 Digit

~~Use one of the codes below to indicate which load rating method was used to determine the Inventory Rating coded in Item 66 for this structure.~~

~~Code~~	~~Description~~
~~1~~	~~Load Factor (LF)~~
~~2~~	~~Allowable Stress (AS)~~
~~3~~	~~Load and Resistance Factor (LRFR)~~
~~4~~	~~Load Testing~~
~~5~~	~~No rating analysis performed~~

Item 66—Inventory Rating Card 06 3 Digits **(SR)**

This capacity rating, for the vehicle type used in the rating, will result in a load level which can safely utilize an existing structure for an indefinite period of time. Code the Inventory Rating as a 3-digit code composed of 2 parts. The statements and codes in Item 64 — Operating Rating apply to this item also.

Item	Description	Length
66	Type of Loading	1 Digit
66	Gross Loading Tons	2 Digits

This item should be coded 299 for a structure under sufficient fill, such that according to AASHTO design, the live load is insignificant in the structure load capacity.

The items in the appraisal section are used to evaluate a bridge in relation to the level of service which it provides on the highway system of which it is a part. The structure will be compared to a new one which is built to current standards for that particular type of road as further defined in this section except for Item 72 — Approach Roadway Alignment. See Item 72 for special criteria for rating that item.

Items 67, 68, 69, 71, and 72 will be coded with a 1-digit code that indicates the appraisal rating for the item. The ratings and codes are as follows:

Code	Description
N	Not applicable
9	Superior to present desirable criteria
8	Equal to present desirable criteria
7	Better than present minimum criteria
6	Equal to present minimum criteria
5	Somewhat better than minimum adequacy to tolerate being left in place as is.
4	Meets minimum tolerable limits to be left in place as is
3	Basically intolerable requiring high priority of corrective action
2	Basically intolerable requiring high priority of replacement
0	Bridge closed

Tables are provided to evaluate Item 67, 68, 69 and 71, and shall be used by all evaluators to code these items. They have been developed to closely match the descriptions for the appraisal evaluation codes of 0 to 9. The tables shall be used in all instances to evaluate the item based on the designated data in the inventory, even if a table does not appear to match the descriptive codes. For unusual cases where the site data does not exactly agree with the table criteria, use the most appropriate table to evaluate the item. Note: To obtain a correct Sufficiency Rating, the following items (along with the usual items) must be coded accurately and in agreement with the tables:

Item 26 & 26A	Functional Classification
Items 28.1 and 28.2	Number of Lanes
Item 29	ADT
Item 49	Structure Length
Item 51	Roadway Width
Item 53	Minimum Vertical Clearance
Item 100	Defense Highway Designation
Item 101	Parallel Structure Designation
Item 102	Direction of Traffic
Item 104	National Highway System (NHS)

If these items are not in agreement with the tables for Items 67, 68, and 69, the FHWA Sufficiency Rating Calculation will furnish a number based on the coding of the record to complete the calculation. That number will be part of the Record Lister (Program 120179) displayed in parentheses to the left of the coded value. If a discrepancy occurs between an expected SR and an FHWA SR, check the listed items for errors.

Completed bridges not yet opened to traffic, if rated, shall be appraised as if open to traffic. Design values, for example, ADT, shall be used for the evaluation. The data provided will include a code of G for Item 41 — Structure Open, Posted, or Closed to Traffic.

Item 67 — Structural Evaluation	Card 06	1 Digit	**(SR)**

Evaluate and code the overall condition taking into account all major structural deficiencies. The appraisal rating is to be based on the condition rating of Item 59—Superstructure, Item 60—Substructure, and Item 66—Inventory Rating. This item generally should be coded no higher than the lowest condition rating of the superstructure or the substructure. The code will also be based on the value obtained from Table 1 which evaluates the inventory rating (HS equivalent) shown for various traffic volumes.

For other than culverts, the lowest of the codes obtained from Item 59—Superstructure, Item 60—Substructure, or Table 1 should generally be used.

For culverts, the lowest of the codes obtained from Item 62—Culverts or Table 1 should generally be used.

Table 1 Note:

1. Use the lower rating code for values between those listed in the table.
2. The live load used in establishing the Inventory Rating shall be one of the standard AASHTO vehicles or the maximum legal loads of the state.
3. To use Table 1, the Inventory Rating must be the coded HS rating or its equivalent. If the comparable HS equivalent is not calculated for the controlling rating, using a factor to determine the HS factor is acceptable, even though converting other rating loads to an HS equivalent is not a constant.
4. All bridges on the Interstate system shall be evaluated using the ADT column of >5000, regardless of the actual ADT on the bridge.

Structural Evaluation Rating Code	Inventory Rating		
	Average Daily Traffic (ADT)		
	0-500	501-5000	>5000 or I-26 FC = 1, 11 or 12
9	>236* (HS20)**	>236 (HS20)	>236 (HS20)
8	236 (HS20)	236 (HS20)	236 (HS20)
7	231 (HS17)	231 (HS17)	231 (HS17)
6	223 (HS13)	225 (HS14)	227 (HS15)
5	218 (HS10)	220 (HS11)	222 (HS12)
4	212 (HS7)	214 (HS8)	218 (HS10)
3	Inventory rating less than value in rating code of 4 and requiring corrective action. (I-75A Type of Work Proposed = 33 thru 38)		
2	Inventory rating less than value in rating code of 4 and requiring replacement. (I-75A Type of Work Proposed = 31 or 32)		
0	Bridge closed. (I-41 Operational Status = K)		

* Coded HS rating load (typical)
** HS Designation (typical)

The overall rating for deck geometry will include two evaluations: (a) the curb-to-curb or face-to-face of rail bridge width using Table 2A, 2B, 2C or 2D; and (b) the minimum vertical clearance over the bridge roadway using Table 2E. The lower of the codes obtained from these tables shall be used. When an individual table lists several deck geometry rating codes for the same roadway width under a specific ADT, use the lower code. (For example, Table 2A lists deck geometry rating codes of 6, 7 and 8 for a 44-foot roadway width and an ADT of >5000. Use the code of 6.) Use the lower code for values between those listed in the tables. Coding ***must*** be in agreement with the tables.

The curb-to-curb or face-to-face of rail dimension shall be taken from Item 51 — Bridge Roadway Width, Curb-to-curb. Item 53 — Minimum Vertical Clearance Over Bridge Roadway shall be used to evaluate the vertical clearance.

For culverts not under fill, use the out-to-out measurement of the travel-way surface plus shoulders or face-to-face measurements of the curbs or rails, which ever is more restrictive. For culverts under fill (Item 51 is 0000), code N.

The values provided in the tables are for rating purposes only. Current design standards must be used for structure design or rehabilitation.

Tables 2A & 2B. Rating by Comparison of ADT—Item 29 and Bridge Roadway Width, Curb-to-Curb—Item 51

Deck Geometry Rating Code	**TABLE 2A**						**TABLE 2B**	
	Item 51 in feet converted from NBI measures in meters **Bridge Roadway Width 2 Lanes, two way traffic**						**Bridge Roadway Width 1 lane, two way traffic**	
	ADT (Both Directions)						**ADT (Both Directions)**	
	0-100	101-400	401-1000	1001-2000	2001-5000	>5000	0-100	>100
9	>32.1	>36.1	>40	>44	>44	>44	—	—
8	32.1	36.1	40	44	44	44	16’01”	—
7	27.9	32.1	36.1	40	44	44	15’01”	—
6	23.9	27.9	29.8	34.1	40	44	14’01”	—
5	20	23.9	25.9	27.9	34.1	38	13’01”	—
4	18	20	22	23.9	27.9	32.1 (27.9)*	12’01”	—
3	16.1	18	20	22	25.9	29.8 (26)*	11’02”	16’01”
2	Any width less than required for a rating code of 3 and structure is open.							
0	Bridge closed.							

* Use value in parentheses for bridges longer than 200 feet.

Notes:
1. Use the lower rating code for values between those listed in the table.
2. Dimensions are in feet.
3. For 3 or more undivided lanes of 2-way traffic, use Table 2C, Other Multilane Divided Facilities.
4. Do not use Table 2B for code 9 and for codes 8 through 4 inclusive when ADT is > 100. Single-lane bridges less than 16 feet wide carrying 2-way traffic are always appraised at 3 or below if they carry more than an ADT on 100.

Table 2C & 2D. Rating by Comparison of Number of Lanes—Item 28 and Bridge Roadway Width, Curb-to-Curb—Item 51

Table 2C Item 51 in feet converted from NBI measures in meters					**Table 2D**	
	Bridge Roadway Width **2 or More Lanes 1-Way Traffic**				**Bridge Roadway Width** **1-Way Traffic**	
Deck Geometry Rating Code	**Interstate and Other Divided Freeways & S.Roads**		**Other Multi-lane Divided Facilities**		**Ramps Only** Item 5.3 = 7	
	2 Lanes	3 or More Lanes	2 Lanes	3 or More Lanes	1 Lane	2 or More Lanes
9	>42	>12.1N+23.9	>42	>12.1N+18	>25.9	>12.1N+12.1
8	42	12.1N+23.9	42	12.1N+18	25.9	12.1N+12.1
7	40	12.1N+20	38	12.1N+15.1	23.9	12.1N+9.8
6	38	12.1N+16.1	36.1	12.1N+12.1	22	12.1N+7.9
5	36.1	12.1N+14.1	33.1	11.2N+9.8	20	12.1N+5.9
4	34.1 (28.9)*	11.2N+12.1 (11.2N+6.9)*	29.8	11.2N+5.9	18	12.1N+3.9
3	33.1 (27.9)*	11.2N+11.2 (11.2N+5.9)*	26.9	11.2N+4.9	16.1	12.1N+2
2	Any width less than required for a rating code of 3 and structure is open.					
0	Bridge closed. (I-41 Operational Status = K)					

* Use value in parentheses for bridges longer than 200 feet.

N = Number of lanes of traffic.

Notes:

1. Use the lower rating code for values between those listed in the tables.
2. Dimensions are in feet.
3. Use Table 2C, other Multilane Divided Facilities, for 3 or more undivided lanes of 2-way traffic.

Table 2E. Rating by Comparison of Minimum Vertical Clearance over Bridge Roadway—Item 53 and Functional Classification—Item 26

Deck Geometry Rating Code	Minimum Vertical Underclearance Item 53 in feet and inches converted from NBI measures in meters			
	Functional Class			
	Interstate and Other Freeways		Other Principal and Minor Arterials	Major and Minor Collectors and Locals
	All Routes: Except as Noted for Urban Areas	Undesignated Route, Urban Areas*		
9	> 17'-0"	> 16'-6"	> 16'-6"	> 16'-6"
8	17'-0"	16'-6"	16'-6"	16'-6"
7	16'-8"	15'-6"	15'-6"	15'-6"
6	16'-6"	14'-6"	14'-6"	14'-6"
5	15'-8"	14'-2"	14'-2"	14'-2"
4	15'-0"	14'-0"	14'-0"	14'-0"
3	Vertical clearance less than value in rating code of 4 and requiring corrective actions. (I-75A Type of Work Proposed = 33 thru 38)			
2	Vertical clearance less than value in rating code of 3 and requiring replacement. (I-75A Type of Work Proposed = 31 or 32)			
0	Bridge closed. (I-41 Operational Status =K)			

* Use for routes in highly developed urban areas only when there is an alternative Interstate, freeway, or expressway facility with a minimum of 16'-0" clearance.

Notes:

1. Use the lower rating code for values between those listed in the table.

Item 69—Underclearances, Vertical and Horizontal	Card 06	1 Digit	**(SR)**

This item refers to vertical and horizontal underclearances from the through roadway to the superstructure or substructure units, respectively. Code N unless the bridge is over a highway or railroad.

The vertical underclearance shall be evaluated using Table 3A. The horizontal underclearance shall be evaluated using Table 3B. The lower of the codes obtained from Table 3A and Table 3B shall be used.

Item 54—Minimum Vertical Underclearance, Item 55—Minimum Lateral Underclearance on Right, and Item 56—Minimum Lateral Underclearance on Left shall be used to evaluate this item.

The functional classification to be used in the table is for the underpassing route. Therefore, the functional classification must be obtained from the record for the route "under" the bridge. See Item 26A Intersecting Route Functional Classification.

If no "under" record exists, it is assumed that the route under the bridge is a major or minor collector or a local road for use in Tables 3A and 3B.

Table 3A. Rating by Comparison of Minimum Vertical Underclearance—Item 54 and Functional Classification of Underpassing Route

Under Clearance Rating Code	Minimum Vertical Underclearance Item 54 in feet and inches converted from NBI measures in meters				
	Functional Class				
	Interstate and Other Freeways		Other Principal and Minor Arterials	Major and Minor Collectors and Locals	Railroad
	All Routes: Except as Noted for Urban Areas	Undesignated Route, Urban Areas*			
9	> 17'-0"	> 16'-6"	> 16'-6"	> 16'-6"	> 23'-0"
8	17'-0"	16'-6"	16'-6"	16'-6"	23'-0"
7	16'-8"	15'-6"	15'-6"	15'-6"	22'-7"
6	16'-6"	14'-6"	14'-6"	14'-6"	22'-0"
5	15'-8"	14'-2"	14'-2"	14'-2"	21'-0"
4	15'-0"	14'-0"	14'-0"	14'-0"	20'-0"
3	Underclearance less than value in rating code of 4 and requiring corrective actions. (I-75A Type of Work Proposed = 33 thru 38)				
2	Underclearance less than value in rating code of 3 and requiring replacement. (I-75A Type of Work Proposed = 31 or 32)				
0	Bridge closed. (I-41 Operational Status =K)				

* Used for routes in highly developed urban areas only when there is an alternative interstate, freeway or expressway facility with a minimum of 16'-0" clearance.

Notes:

1. Use the lower rating code for values between those listed in the tables.
2. The functional classification of the underpassing route shall be used in the evaluation. If an "under" record is not coded, the underpassing route shall be considered a major or minor collector or a local road.

Table 3B. Rating by Comparison of Minimum Lateral Underclearances Right & Left—Items 55 and 56 and Functional Classification of Underpassing Route

Underclearance Rating Code	Minimum Lateral Underclearance Item 55 and 56 in feet converted from NBI measures in meters						
	Functional Class						Railroad
	1- Way Traffic				2-Way Traffic		
	Principal Arterials – Interstate, Freeways or Expressways				Other Principal and Minor Arterials	Major and Minor Collectors And Locals	
	Main Lane		Ramp				
	Left	Right	Left	Right			
9	>29.8	>29.8	>3.9	>9.8	>29.8	>12.1	>20
8	29.8	29.8	3.9	9.8	29.8	12.1	20
7	18	21	3	9	21	11.2	17.1
6	5.9	12.1	2	7.9	12.1	9.8	14.1
5	4.9	11.2	2	6	9.8	7.9	11.2
4	3.9	9.8	2	3.9	5.9	3.9	7.9
3	Underclearance less than value in rating code of 4 and requiring corrective actions. (I-75A Type of Work Proposed = 33 thru 38)						
2	Underclearance less than value in rating code of 3 and requiring replacement. (I-75A Type of Work Proposed = 31 or 32)						
0	Bridge closed. (I-41 Operational Status =K)						

Notes:

1. Use the lower rating code for values between those listed in the tables.
2. Dimensions are in feet and inches.
3. When acceleration or deceleration lanes or ramps are provided under 2-way traffic, use the value from the right ramp column to determine code.
4. The functional classification of the underpassing route shall be used in the evaluation. If an "under" record is not coded, the underpassing route shall be considered a major or minor collector or a local road.

Item 70 — Bridge Posting

Card 06 1 Digit

The National Bridge Inspection Standards require the posting of load limits only if the maximum legal load in the state produces stresses in excess of the operating stress level. If the load capacity at the operating level is such that posting is required, this item shall be coded 0 through 4. If no posting is required at the operating level, this item shall be coded 5.

This item evaluates the load capacity of a bridge in comparison to the state legal load. It differs from Item 67 — Structural Evaluation in that Item 67 uses the inventory rating, while the bridge posting requirement is based on the operating rating.

Although posting a bridge for load-carrying capacity is required only when the maximum legal load exceeds the operating rating capacity, highway agencies may choose to post at lower rating capacities. This posting practice may appear to produce conflicting coding when Item 41 — Structure Open, Posted or Closed to Traffic is coded to show the bridge as actually posted at the site and Item 70 — Bridge Posting is coded as bridge posting is not required. Since different criteria are used for coding these 2 items, this coding is acceptable and correct when the highway agency elects to post at less than the operating rating stress level. Item 70 shall be coded 0 through 4 only if the legal load of the state exceeds that permitted under the operating rating.

The use or presence of a temporary bridge affects the coding. The load capacity shall reflect the actual capacity of the temporary bridge at the operating rating. This also applies to bridges shored up or repaired on a temporary basis.

Code	Description
0, 1, 2, 3 or 4	Posting required
5	No posting required

The degree that the operating rating stress level is under the maximum legal load stress level may be used to differentiate between codes. As a guide and for coding purposes only, the following values may be used to code this item:

Code Rating	Stress to Legal Load Stress
5	Equal to or above legal loads
4	0.10 — 9.9% below
3	10.0 — 19.9% below
2	20.0 — 29.9% below
1	30.0 — 39.9% below
0	> 39.9% below

Item 71 — Waterway Adequacy

Card 06 1 Digit **(SR)**

This item appraises the waterway opening with respect to passage of flow through the bridge. The following codes shall be used in evaluating waterway adequacy. Site conditions may warrant somewhat higher or lower ratings than indicated by the table (e.g., flooding of an urban area due to a restricted bridge opening).

Where overtopping frequency information is available, the descriptions given in the table for chance of overtopping mean the following:

Remote	—	greater than 100 years
Slight	—	11 to 100 years
Occasional	—	3 to 10 years
Frequent	—	less than 3 years

Adjectives describing traffic delays mean the following:

Insignificant	—	Minor inconvenience. Highway passable in a matter of hours
Significant	—	Traffic delays of up to several days.
Severe	—	Long term delays to traffic with resulting hardship.

Table 4. Rating of Waterway Adequacy

Functional Classification			Description
Principal Arterials-Interstates, Freeways, or Expressways	**Principal and Minor Arterials and Major Collectors**	**Minor Collectors, Locals**	
Code			
N	N	N	Bridge not over waterway.
9	9	9	Bridge deck and roadway approaches above flood water elevations (high water). Chance of overtopping is remote.
8	8	8	Bridge deck above roadway approaches. Slight chance of overtopping roadway approaches.
6	6	7	Slight chance of overtopping bridge deck and roadway approaches.
4	5	6	Bridge deck above roadway approaches. Occasional overtopping of roadway approaches with insignificant traffic delays.
3	4	5	Bridge deck above roadway approaches. Occasional overtopping of roadway approaches with significant traffic delays.
2	3	4	Occasional overtopping of bridge deck and roadway approaches with significant traffic delays.
2	2	3	Frequent overtopping of bridge deck and roadway approaches with significant traffic delays.
2	2	2	Occasional or frequent overtopping of bridge deck and roadway approaches with severe traffic delays.
0	0	0	Bridge closed.

Code the rating based on the adequacy of the approach roadway alignment. This item identifies those bridges which do not function properly or adequately due to the alignment of the approaches. It is not intended that the approach roadway alignment be compared to current standards, but rather to the existing highway alignment. This concept differs from other appraisal evaluations. The establishment of set criteria to be used at all bridge sites is not appropriate for this item. The basic criteria is how the alignment of the roadway approaches to the bridge relate to the general highway alignment for the section of highway the bridge is on.

The individual structure shall be rated in accordance with the general appraisal rating guide in lieu of specific design values. The approach roadway alignment will be rated intolerable (a code of 3 or less) only if the horizontal or vertical curvature requires a substantial reduction in the vehicle operating speed from that on the highway section. A very minor speed reduction will be rated a 6, and when a speed reduction is not required, the appraisal code will be an 8. Additional codes may be selected between these general values.

As a guide and for coding purposes only, the following may be used to code this item:

Speed Reduction (MPH)	Code
> 0 ≤	8
> 0 ≤ 5	7
> 5 ≤ 10	6
> 10 ≤ 15	5
> 15 ≤ 20	4
> 20	3 or less

For example, if the highway section requires a substantial speed reduction due to vertical or horizontal alignment, and the roadway approach to the bridge requires only a very minor additional speed reduction at the bridge, the appropriate code would be a 6. This concept shall be used at each bridge site.

Speed reductions that are necessary because of structure width, and not alignment, shall not be considered in evaluating this item.

Item 75 — Type of Work Card 07 3 Digits **(SR)**

The information to be recorded for this item will be the type of work proposed to be accomplished on the structure to improve it to the point that it will provide the type of service needed and whether the proposed work is to be done by contract or force account. Code a 3-digit number composed of 2 parts.

Item	Description	Length
75	Type of Work Proposed	2 Digits
75	Work Done by	1 Digit

This item, along with Items 76, 94, 95, 96, and 97, must be coded for a bridge eligible for the Highway Bridge Replacement and Rehabilitation Program. It may be coded for other bridges at the option of the TxDOT.

If the structure has a sufficiency rating of less than 80 and is structurally deficient or functionally obsolete, a calculated cost for these items (see above) will be entered by program until the actual cost is determined. Enter Items 75, 76, 94, 95, 96, and 97 when the actual cost of replacement or rehabilitation is developed by the district. Use one of the following codes to represent the proposed work type:

Code	Description
Blank	No proposed improvements.
31	Replacement of bridge or other structure because of substandard load carrying capacity or substandard bridge roadway geometry.
32	Replacement of bridge or other structure because of relocation of road.
33	Widening of existing bridge or other major structure without deck rehabilitation or replacement; includes culvert lengthening.
34	Widening of existing bridge with deck rehabilitation or replacement.
35	Bridge rehabilitation because of general structure deterioration or inadequate strength.
36	Bridge deck rehabilitation with only incidental widening.
37	Bridge deck replacement with only incidental widening.
38	Other structural work.

The third digit shall be coded using one of the following codes to indicate whether the proposed work is to be done by contract or by force account:

Code	Description
Blank	No proposed improvements.
1	Work to be done by contract.
2	Work to be done by owner's forces

.

EXAMPLES:

	Code
A bridge is to be replaced by contract because it has deteriorated to the point that it can no longer carry legal loads. The same code should be used if the bridge replaced because it is now too narrow or the original design was too light to accommodate today's legal loads.	311
A bridge is to be replaced because the roadway must be straightened to eliminate a dangerous curve. The work will be done by contract. .	321
A bridge is to be widened to increase shoulder width or the number of traffic lanes. The existing deck is in good condition and will be incorporated as is into the new structure The work is to be done by contract.	331
A culvert is to be extended by contract to accommodate additional roadway width as part of a reconstruction contract to improve the safety of the adjacent slopes.	331
A deck is to be rehabilitated and the bridge widened to provide a full 12-foot shoulder. The existing shoulder is only 4 feet wide, and an extra line of girders with an extra line of girders with appropriate substructure widening must be added. The work will be done by contract.	341
A bridge superstructure and substructure are to be rehabilitated by state forces to increase The bridge's load capacity.	352
A bridge deck is to be rehabilitated by contract and a safety curb to be removed which results in incidental widening of 2 feet.	361
A bridge deck is to be replaced by contract and the deck cantilever overhang extended 2 feet, which is the maximum that can be done without adding another line of stringers or girders to the superstructure	371
A bridge that is no longer needed is to be demolished and an at-grade crossing built by state forces. (This code could also be used to designate incidental safety work on a bridge such as bridge-rail upgrading or replacement.)	382

Item 76 — Length of Structure Improvement (XXXXXX feet)	Card 07	6 Digits

Code a 6-digit number that represents the length of the proposed bridge improvement to the nearest foot. For replacement or rehabilitation of the entire bridge, the length should be back to back of backwalls of abutments or from pavement notch to pavement notch. For replacement or rehabilitation of only part of the structure, use the length of the portion to be improved. Code zeros for new structures or for no improvements needed.

This item must be coded for bridges eligible for the Highway Bridge Replacement and Rehabilitation Program. It may be coded for other bridges at the option of the TxDOT.

For culvert improvements, use the proposed length measured along the centerline of the barrel regardless of the depth below grade. The measurement should be made between the inside faces of the top parapet or edge-stiffening beam of the top slab.

EXAMPLES:

Length of Structure Improvement	Code
250 feet	000250
1,200 feet	001200
12,345 feet	012345
No improvement	000000

For substructure or channel work only, code the length of superstructure over, or supported by, the substructure or channel.

Typically, a replacement bridge is longer than the existing bridge. Nationwide averages for the increase in bridge length with replacement as a function of the existing length are given in the following figure. The length-expansion factors represent data for the years 1981 to 1985. Where site-specific data is lacking, these factors are suggested for estimating the length of replacement bridges. For exceedingly long bridges (i.e., 1000 feet or more) the length-expansion factor approaches 1.0.

Item 88 — Special Flags	Card 07	8 Digits

Special flags coding are used to denote bridges which require special attention such as periodic underwater inspections or fracture critical inspections. Details on criteria and techniques for these types of inspections are given in “Criteria for Underwater Inspection,” and “Fracture Critical Bridge Members” in the ***Bridge Inspection Manual***.

Special flags coding is a six digit code composed of four segments:

Item 88A — Special Flags, Underwater Inspection	**1 Digit**
Item 88B — Special Flags, Number of Fracture Critical Areas	**2 Digits**
Item 88C — Special Flags, Type of Steel	**1 Digit**
Item 88D — Special Flags, Year Steel Painted	**4 Digits**

Item 88A — Underwater Inspection | Card 07 | 1 Digit

In general, there are three categories of underwater inspections that may be appropriate for a given bridge. These categories are channel profile measurements, scour investigations, and substructure examinations. If portions of the channels are submerged, then appropriate underwater inspection techniques should be used to take channel profiles. Scour investigations should be performed if there is a potential for scour judged by the stream velocity at flood stage and by the characteristics of the channel bed and/or if there is potential for substructure problems such as undermining of a spread footing or exposure of steel or timber piling. If significant portions of the substructure are constantly submerged, an examination (usually by divers) of these submerged potions would ordinarily be warranted when:

1. Above water inspection indicates that there may be a serious problem below water.
2. Submerged portions are susceptible to deterioration that may not be evident through a visual inspection of areas near the low water or tide line. In salt, brackish, or corrosive waters, underwater portions of the substructure are susceptible to hidden corrosion when there is a change in the type, configuration, or protection of material in the area for the splash zone to the mud line. In fresh or non-corrosive waters, susceptibility is generally limited to bridges where material changes occur near the low water level.
3. Plans are not available, and there is a possible material change as described in the preceding paragraph.

   The underwater inspection segment is used to denote that a bridge requires underwater inspection and if divers or special equipment are necessary. The following codes are used to identify underwater types of inspections:

N	Underwater inspection is not necessary.
1	Routine underwater inspections.
2	Divers or special techniques are necessary.

Call the BRG Inspection Branch if you are unsure of the underwater inspection requirements of a particular bridge.

Item 88B — Fracture Critical Elements | Card 07 | 2 Digits

A fracture critical bridge member is a steel bridge member in which a single fracture could cause the bridge to collapse. When bridge engineers talk about fracture and fracture critical members, they are talking about the failure of a steel member by cracking. Generally speaking, a fracture in an existing bridge will begin with a small crack which grows slowly over the years until it reaches critical size. This critical size depends on the type of steel, the stress in the steel, and the temperature of the steel. Whatever the critical size, once a crack reaches that size, it grows instantaneously across the remainder of the cross-sectional element. This instantaneous crack growth is what bridge engineers call a fracture.

A fracture is not always catastrophic, but in certain situations where only a few separate steel elements are available to carry the load, a single undetected crack in one element could result in a catastrophic fracture that causes the bridge to collapse. Two-girder systems, box girder bridges with single box design, steel caps, truss bridges, suspension bridges, and two-girder suspended span bridges all have fracture critical elements. If you have questions about a bridge's fracture critical details, call the BRG Inspection Branch.

Fracture critical elements are locations where cracking is likely to occur. There may be several fracture critical details within one element. The number of elements gives the special inspection team a good idea of how often the bridge snooper will have to be moved during inspections. This segment of Item 88 identifies the number of fracture critical elements. Coding for these two digits will be the number of fracture critical elements found. Code NN for structures without fracture critical members.

01 thru 99	Number of fracture critical elements
NN	Denotes structure with no fracture critical elements

Item 88C — Steel Type	Card 07	1 Digit

Coding for steel type will identify the painting needs for a structure. The following codes identify the steel type:

N	Structure does not have structural steel.
1	All exposed steel is weathering type.
2	Some or all exposed structural steel will require painting during its design life.

Item 88D — Year Steel Painted	Card 07	4 Digits

Code the year the structural steel was last painted.

Item 90 — Inspection Date (mm-dd-yyyy)	Card 06	8 Digits

Record the month, day, and year that the last routine inspection of the structure was performed. This inspection date may be different from those recorded in Item 93 — Critical Feature Inspection Date. Code a 8-digit number to represent the month, day, and year with leading zeros as required.

EXAMPLES:

Inspection Date	Code
November 3, 1986	11031986
March 12, 1987	03121987

Item 91 — Designated Inspection Frequency Card 06 2 Digits

Code 2 digits to represent the number of months between designated inspections of the structure. Leading zeros shall be coded. This interval is usually determined by the individual in charge of the inspection program. For posted, understrength bridges, this interval should be substantially less than the 24-month standard. The designated inspection interval could vary from inspection to inspection depending on the condition of the bridge at the time of inspection.

EXAMPLES:

Inspection Frequency	Code
Posted bridge with heavy truck traffic and questionable structural details which is designated to be inspected each month.	01
Bridge is scheduled to be inspected every 24 months.	24
Concrete culverts that meet the 48-month criteria	48

Criteria for 48-month Inspections of Concrete Box Culverts
(Item 91— Designated Inspection Frequency coded 48 months).

Item 21 — Maintenance Responsibility must be coded 01; limited to state-maintained structures

Item 27 — Year Built must be older than 2 and less than 50 years

Item 29 — Average Daily Traffic must be less than 100,001

Item 43.4 — Structure Type, Culvert, must be coded 23 for concrete culvert

Item 48 — Maximum Span Length must be equal to or less than 12 feet

Item 61 — Channel must be rated 6, 7, 8, or 9

Item 62 — Culvert must be rated 6, 7, 8, or 9

Item 66 — Inventory Rating must be HS 20, coded 236 or higher

Item 67 — Structural Evaluation must be rated 6, 7, 8, or 9

Item 109 — Average Daily Truck Traffic must be less than 25,001

New structures will be inspected at the 24-month frequency. After re-inspection, if they meet the above criteria, they can be moved to the 48-month inspection frequency. Any change to the coded criteria items (outside the specified ranges) or performance of major structural repairs will remove a structure from the 48-month inspection frequency cycle: 24 months will be used instead until the repairs prove to be stable.

It should be noted that bridges will also require special nonscheduled inspections after unusual physical traumas such as floods, earthquakes, fires or collisions. These special inspections may range from a very brief visual examination to a detailed in-depth evaluation depending upon the nature of the trauma. For example, when a substructure pier or abutment is struck by an errant vehicle, in most cases only a visual examination of the bridge is necessary. After major collisions or earthquakes, in-depth inspections may be warranted as directed by the engineer in overall charge of the program. After and during severe floods, the stability of the substructure of bridges may have to be determined by probing, underwater sensors or other appropriate measures. Underwater inspection by divers may be required for some scour critical bridges immediately after floods. See Item 113 — Scour Critical Bridges.

Item 92 — Critical Feature Inspection Card 06 9 Digits

Using a series of 3-digit code segments, denote critical features that need special inspections or special emphasis during inspections and the designated inspection interval in months as determined by the individual in charge of the inspection program. The designated inspection interval could vary from inspection to inspection depending on the condition of the bridge at the time of inspection.

Segment	Description	Length
92.1	Fracture Critical Inspection	3 Digits
92.2	Underwater Inspection	3 Digits
92.3	Other Special Inspection	3 Digits

For each of 92.1, 92.2, and 92.3, code the first digit Y for special inspection or emphasis needed and code N for not needed. The first digit of 92.1, 92.2, and 92.3 must be coded for all structures to designate either a yes or no answer. In the second and third digits of each segment, code a 2-digit number to indicate the number of months between inspections only if the first digit is coded Y.

92.1	**Fracture Critical Inspection can not exceed 60 months.**
92.2	**Underwater inspections can not exceed 60 months.**
92.3	**Special inspections can not exceed 60 months.**

If the first digit is coded N, the second and third digits are left blank.

EXAMPLES:

		Segment Code
A 2-girder system structure which is being inspected yearly and	92.1	Y12
no other special inspections are required.	92.2	N__
	92.3	N__
A structure where both fracture critical and underwater	92.1	Y12
inspection are being performed on a 1-year interval. Other	92.2	Y12
special inspections are not required	92.3	N__
A structure has been temporarily shored and is being inspected	92.1	N__
on a 06-month interval. Other special inspections are not	92.2	N__
required.	92.3	YO6

Item 93 — Critical Feature Inspection Date Card 06 18 Digits

Code only if the first digit of Item 92.1, 92.2, or 92.3 is coded Y for yes. Record as a series of 4-digit code segments, the month and year that the last inspection of the denoted critical feature was performed.

Segment	Description	Length
93.1	Fracture Critical Inspection	6 Digits
93.2	Underwater Inspection	6 Digits
93.3	Other Special Inspection	6 Digits

For each segment of this item, when applicable, code a 6-digit number to represent the month and year. The number of the month should be coded in the first 2 digits with leading zeros as required and the last 4 digits of the year coded as the through sixth digits of the field. If the first digit of any part of Item 92 is coded N, then the corresponding part of this item shall be blank.

EXAMPLES:

	Item	Code
A structure has fracture critical members which were last inspected in March 1986. It does not require underwater or other special feature inspections.	93.1 93.2 93.3	031986 Blank Blank
A structure has no fracture critical details, but requires underwater inspection and has other special features (for example, a temporary support) for which the state requires special inspection. The last underwater inspection was done in April 1986, and the last special feature inspection was done in November 1985.	93.1 93.2 93.3	Blank 041986 111985

Item 94 — Bridge Improvement Cost Card 07 6 Digits

Code a 6-digit number to represent the cost of the proposed bridge or major structure improvements in thousands of dollars. This cost shall include only bridge construction costs, excluding roadway, right-of-way, detour, demolition, preliminary engineering, etc. Code the base year for the cost in Item 97 — Year of Improvement Cost Estimate. Do not use this item for estimating maintenance costs.

This item must be coded for bridges eligible for the Highway Bridge Replacement and Rehabilitation Program. It may be coded for other bridges at the option of TxDOT.

EXAMPLES:

Bridge Improvement Cost	Code
$55,850	000056
$250,000	000250
$7,451,233	007451
No improvement	Blank

Nationally, the deck area of replaced bridges is averaging 2.2 times the deck area before replacement. The deck area of rehabilitated bridges is averaging 1.5 times the deck area before rehabilitation. Widening square foot costs are typically 1.8 times the square foot cost of new bridges with similar spans. For example, if the average cost of a new bridge is $50 per square foot, the average cost of the widened area would be $90 per square foot.

Each district is encouraged to use its best available information and established procedures to determine bridge improvement costs. In the absence of these procedures, the district may wish to use the following procedure as a guide in preparing bridge improvement cost estimates.

Apply a construction unit cost to the proposed bridge area developed by using (1) current state deck geometry design standards and (2) proposed bridge length from Item 76 — Length of Structure Improvement.

Item 95 — Roadway Improvement Cost Card 07 6 Digits

Code a 6-digit number to represent the cost of the proposed roadway improvement in thousands of dollars. This shall include only roadway construction costs, excluding bridge, right-of-way, detour, extensive roadway realignment costs, preliminary engineering, etc. Code the base year for the cost in Item 97 — Year of Improvement Cost Estimate. Do not use this item for estimating maintenance costs.

This item must be coded for bridges eligible for the Highway Bridge Replacement and Rehabilitation Program. It may be coded for other bridges at the option of the TxDOT.

In the absence of a procedure for estimating roadway improvement costs, a guide of 10 percent of the bridge costs is suggested. Leave blank if there is no improvement cost.

Item 96 — Total Project Cost Card 07 6 Digits

Code a 6-digit number to represent the total project cost in thousands of dollars, including incidental costs not included in Items 94 and 95. This item should include all costs normally associated with the proposed bridge improvement project. The Total Project Cost will therefore usually be greater than the sum of Items 94 and 95. Code the base year for the cost in Item 97 — Year of Improvement Cost Estimate. Do not use this item for coding maintenance costs.

This item must be coded for bridges eligible for the Highway Bridge Replacement and Rehabilitation Program. It may be coded for other bridges at the option of the TxDOT.

In the absence of a procedure for estimating the total project cost, a guide of 150 percent of the bridge cost is suggested. Leave blank if there is no improvement cost. NOTE: District-entered costs will be indicated with a "D" and computer-calculated costs with a "C" in a flag field to the left of this item.

Item 97 — Year of Improvement Cost Estimate Card 07 4 Digits

Record the year that the costs of work estimated in Item 94 — Bridge Improvement Cost, Item 95 — Roadway Improvement Cost, and Item 96 — Total Project Cost were based upon. This date and the data provided for Item 94 through Item 96 must be current; that is, Item 97 shall be no more than 8 years old.

EXAMPLES:

Year of Cost Estimate	Code
1988 costs	1988
2010 costs	2010
No improvement	Blank

Item 98 — Border Bridge Card 08 5 Digits

Use this item to indicate structures crossing borders of states. Code a 5-digit number composed of 2 segments specifying the responsibility for improvements to the existing structure when it is shared with a neighboring state. Code the first 3 digits with the neighboring state code using state codes listed in Item 1 — State Code. Code the fourth and fifth digits with the percentage of total deck area of the existing bridge that the neighboring state is responsible for funding.

Item	Description	Length
98	Neighboring State Code	3 Digits
98	Percent Responsibility	2 Digits

Code	Description
056	Arkansas
226	Louisiana
356	New Mexico
406	Oklahoma

For the special case of a structure on the border with Mexico, code the State code value = MEX. If structure is not on a border, leave blank.

EXAMPLES:

Description	Code
A structure connects your district with Louisiana and Louisiana is responsible for funding 45 percent of future improvement costs.	22645
A structure connects your district with Mexico and Mexico is not responsible for any funding of future improvement costs.	MEX00

Item 99 — Border Bridge Structure Number Card 08 15 Digits

Code the neighboring state's 15-digit National Bridge Inventory structure number for any structure noted in Item 98 — Border Bridge. This number must match exactly the neighboring state's submitted NBI structure number. The entire 15-digit field must be accounted for including zeros and blank spaces, whether they are leading, trailing, or embedded in the 15-digit field. If Item 98 is blank, this item is blank.

Item 100 — STRAHNET Highway Designation Card 08 1 Digit **(SR)**

This item shall be coded for all records in the inventory. For the inventory route identified in Item 5, indicate defense highway conditions using one the following code Link to STRAHNET maps

Code	Description
0	The inventory route is not a STRAHNET route.
1	The inventory route is on a Interstate STRAHNET route.
2	The inventory route is on a Non-Interstate STRAHNET route.
3	The inventory route is on a STRAHNET connector route.

Item 100A — Intersecting Route STRAHNET Highway Designation Card 11 1 Digit **(SR)**

Enter the defense highway designation for the intersecting route identified in 5.1A. Indicate defense highway condition using one of the following codes: Link to STRAHNET maps

Code	Description
0	The intersecting route is not a STRAHNET route.
1	The intersecting route is on a Interstate STRAHNET route.
2	The intersecting route is on a Non-Interstate STRAHNET route
3	The intersecting route is on a STRAHNET connector route.

.

Item 101 — Parallel Structure Designation Card 08 1 Digit

Code this item to indicate situations where separate structures carry the inventory route main lanes in opposite directions of travel over the same feature. Code N for service road structures.

One of the following codes shall be used:

Code	Description
R	The right structure of parallel bridges carrying the roadway in the direction of the inventory. (For a defense highway, this is west to east and south to north.)
L	The left structure of parallel bridges. This structure carries traffic in the opposite direction.
N	No parallel structure exists or service road structure.

EXAMPLES:

	Code
Structure #1	R
Structure #2	L

Item 101A — Intersecting Route Parallel Structure Card 11 1 Digit

Code this item to indicate situations where separate structures carry the intersecting route in opposite directions of travel over the same feature. Use one of the following codes:

Code	Description
R	The right structure of parallel bridges carrying the roadway in the direction of the inventory. (For a defense highway, this is west to east and south to north.)
L	The left structure of parallel bridges. This structure carries traffic in the opposite direction.
N	No parallel structure exists.

Item 102 — Direction of Traffic Card 08 1 Digit **(SR)**

Code the direction of traffic as a 1-digit number. This item must be compatible with other traffic-related items such as Item 29 — Average Daily Traffic and Item 51 — Bridge Roadway Width, Curb-to-Curb.

Code	Description
0	Highway traffic not carried
1	1-way traffic
2	2-way traffic
3	One-lane bridge for 2-way traffic

Item 102A — Intersecting Route Direction of Traffic Card 11 1 Digit **(SR)**

Enter the direction of traffic for the intersecting route as a 1-digit number. This item must be compatible with other traffic-related items such as Item 29A – Intersecting Route Average Daily Traffic.

Code	Description
0	Highway traffic not carried.
1	1-way traffic.
2	2-way traffic.
3	One-lane bridge for 2-way traffic.

Item 103 — Temporary Structure Designation Card 08 1 Digit

Code this item to indicate situations where temporary structures or conditions exist. This item should be blank if not applicable.

Code	Description
T	Temporary structure(s) or conditions exist.

Temporary structure(s) or conditions are those which are required to facilitate traffic flow. This may occur either before or during the modification or replacement of a structure found to be deficient. Such conditions include the following:

1. Bridges shored up, including additional temporary supports.
2. Temporary repairs made to keep a bridge open.
3. Temporary structures, temporary runarounds or bypasses.
4. Other temporary measures, such as barricaded traffic lanes, to keep the bridge open.

Any repaired structure or replacement structure which is expected to remain in place without further project activity, other than maintenance, for a significant period of time shall not be considered temporary. Under such conditions, that structure, regardless of its type, shall be considered the minimum adequate to remain in place and evaluated accordingly.

If this item is coded T, then all data recorded for the structure shall be for the condition of the structure without temporary measures, except for the following items which shall be for the temporary structure:

Item	
	10 — Inventory Route, Minimum Vertical Clearance
	41 — Structure Open, Posted, or Closed to Traffic
	47 — Inventory Route, Total Horizontal Clearance
	53 — Minimum Vertical Clearance Over Bridge Roadway
	54 — Minimum Vertical Underclearance
	55 — Minimum Lateral Underclearance on Right
	56 — Minimum Lateral Underclearance on Left
	70 — Bridge Posting

Item 103A — Intersecting Route Temporary Structure Designation Card 11 1 Digit

Enter this item in situations where temporary structures exist on the intersecting route. This item should be left blank if not applicable. See Item 103 for codes and explanations.

Item 104 — Highway System of the Inventory Route Card 08 1 Digit

This item is to be coded for all records in the inventory. For the Inventory Route identified in Item 5, indicate whether or not the Inventory Route is on the National Highway System (NHS). Use one of the following codes:

Code	Description
0	Inventory Route is ***not*** on the NHS
1	Inventory Route ***is*** on the NHS

Item 104A — Intersecting Route Highway System Card 11 1 Digit

This item is to be coded for all records in the inventory. For the Intersecting Route identified in Item 5, indicate whether or not the Intersecting Route is on the National Highway System (NHS). Use one of the following codes:

Code	Description
0	Intersecting Route is ***not*** on the NHS
1	Intersecting Route ***is*** on the NHS

Item 105 — Federal Lands Highways Card 13 1 Digit

Structures owned by State and local jurisdictions on roads which lead to and traverse through federal lands sometimes require special coded unique identification because they are eligible to receive funding from the Federal Lands Highway Program. One of the following codes shall be used:

Code	Description
0	Not applicable
1	Indian Reservation Road (IRR)
2	Forest Highway (FH)
3	Land Management Highway System (LMHS)
4	Both IRR and FH
5	Both IRR and LMHS
6	Both FH and LMHS
9	Combined IRR, FH, and LMHS

Item 106 — Year Reconstructed or Widened Card 08 4 Digits **(SR)**

Code the year of reconstruction or widening of the structure. Code all 4 digits of the latest year in which reconstruction or widening of the structure was completed. If there has been no reconstruction or widening, code 0000.

For a bridge to be defined as reconstructed, the type of work performed, whether or not it meets current minimum standards, must have been eligible for funding under any of the federal-aid funding categories. The eligibility criteria would apply to the work performed regardless of whether all state or local funds or federal-aid funds were used.

Some types of eligible work **NOT** to be considered as reconstruction are listed:

- Safety feature replacement or upgrading (for example, bridge rail, approach guardrail or impact attenuators).
- Painting of structural steel.
- Overlay of bridge deck as part of a larger highway surfacing project (for example, overlay carried across bridge deck for surface uniformity without additional bridge work).
- Utility work.
- Emergency repair to restore structural integrity to the previous status following an accident.
- Retrofitting to correct a deficiency which does not substantially alter physical geometry or increase the load-carrying capacity.
- Work performed to keep a bridge operational while plans for complete rehabilitation or replacement are under preparation (for example, adding a substructure element or extra girder).

EXAMPLE:

Reconstruction completed	Code
1970	1970

Item 106.1 — Widening Code	Card 08	1 Digit

Coding for this item is given below. For instance, if a bridge has been widened only on one side in only one widening job, then code 1 would apply; however, if the bridge has been widened only on one side in three separate widening jobs, then code 3 would apply. If the bridge has been widened on both sides under one job, then code 5 would apply; and if the bridge has been widened on both sides, under two different widening jobs, then code 6 would apply. This item only applies to bridges that carry automotive traffic.

Code	Description
0	No widening or not applicable
1	One side, one widening job
2	One side, two widening jobs
3	One side, three widening jobs
4	One side, four widening jobs
5	Both sides, one widening job
6	Both sides, two widening jobs
7	Both sides, three widening jobs
8	Both sides, four widening jobs
9	Other widening

Item 107.1 — Deck Structure Type, Main Span	Card 08	1 Digit
Item 107.2 — Deck Structure Type, Major Approach Span	Card 08	1 Digit
Item 107.3 — Deck Structure Type, Minor Approach Span	Card 08	1 Digit

Record the type of deck system on the bridge. Code the deck type for Item 107.1 — Main Span, Item 107.2 — Major Approach Span or Item 107.3 — Minor Approach Span. Code N for a filled culvert or arch with the approach roadway section carried across the structure. Also, code N for Items 107.2 and 107.3 if there are no major or minor approach spans. Use the following codes:

Code	Description
1	Concrete Cast-in-Place
2	Concrete Precast Panels
3	Open Grating
4	Closed Grating
5	Steel plate (includes orthotropic)
6	Corrugated Steel
7	Aluminum
8	Timber
9	Other
N	Not Applicable or Non-vehicular Traffic Structures

Item 108.1 — Wearing Surface/Protective System, Main Span	Card 08	3 Digits
Item 108.2 — Wearing Surface/Protective System, Major Approach Span	Card 08	3 Digits
Item 108.3 — Wearing Surface/Protective System, Minor Approach Span	Card 08	3 Digits

Information on the wearing surface and protective system of the bridge deck shall be coded using a 3-digit code composed of 3 segments. Code N for Items 108.2 and 108.3 if there are no major or minor approach spans.

Code the wearing surface/protective system for Item 108.1, 108.2 or 108.3 using the codes listed below.

Segment	Description	Length
108 First Digit	Type of Wearing Surface	1 Digit
108 Second Digit	Type of Membrane	1 Digit
108 Third Digit	Deck Protection	1 Digit

1st Digit — TYPE OF WEARING SURFACE:

Code	Description
1	Concrete
2	Integral Concrete*
3	Latex Concrete
4	Low Slump Concrete
5	Epoxy Overlay
6	Bituminous
7	Timber
8	Gravel
0	None
9	Other
N	Not Applicable (applies only to structures with no deck)

* Separate layer of concrete added, but not latex modified, low slump, etc.

2nd Digit — TYPE OF MEMBRANE: DECK WATERPROOFING

Code	Description
1	Built-up
2	Preformed Fabric
3	Epoxy
8	Unknown
9	Other
0	None
N	Not Applicable (applies only to structures with no deck)

3rd Digit — DECK PROTECTION:

Code	Description
1	Epoxy-Coated Reinforcing
2	Galvanized Reinforcing
3	Other Coated Reinforcing
4	Cathodic Protection
6	Polymer Impregnated
7	Internally Sealed
8	Unknown
9	Other
0	None
N	Not Applicable (applies only to structures with no deck)

Item 109 — Average Daily Truck Traffic (XX percent) Card 08 2 Digits

Code a 2-digit percentage that shows the percentage of Item 29 — Average Daily Traffic that is truck traffic. This information is available for on-system bridges from TPP Traffic Section. Do not include vans, pickup trucks and other light delivery trucks in this percentage.

If this information is not available, an estimate which represents the average percentage for the category of road carried by the bridge may be used. Leave blank if Item 29 — Average Daily Traffic is not greater than 100.

EXAMPLES:

Average Daily Traffic	Code
7% trucks	07
12% trucks	12

Item 109A — Intersecting Route Average Daily Truck Traffic Card 11 2 Digits

If Item 29A — Intersecting Route Average Daily Traffic is greater than 100, enter the average daily truck traffic in Item 109A. Leave Item 109A blank if Item 29A is less than 100. See Item 109 for further explanations.

Item 110 — Designated National Network Card 08 1 Digit

The national network for trucks includes most of the Interstate System and those portions of the Federal-Aid Primary System identified in the ***Code of Federal Regulations*** (23 CFR 658). The national network for trucks is available for use by commercial motor vehicles of the dimensions and configurations described in these regulations. For the inventory route identified in Item 5, indicate conditions using one of the following codes:

Code	Description
0	The inventory route is not part of the national network for trucks. Route has known limitations: length, width, load restrictions, or posted for no commercial vehicles.
1	The inventory route is part of the national network for trucks (no known commercial motor vehicle restrictions).

Item 110A — Intersecting Route Designated National Network Card 11 1 Digit

For the intersecting route identified in Item 5.1A, indicate whether it is part of the national network for trucks (most of the Interstate System and those portions of the Federal-Aid Primary System identified in the ***Code of Federal Regulations,*** 23 CFR 658).

Code	Description
0	The intersecting route is not part of the national network for trucks. Route has known limitations: length, width, or load restriction).
1	The intersecting route is part of the national network for trucks (no known commercial motor vehicle restrictions).

Item 111 — Pier or Abutment Protection (for Navigation) Card 08 1 Digit

If Item 38 — Navigation Control has been coded 1, use the codes below to indicate the presence and adequacy of pier or abutment protection features such as fenders, dolphins, etc. The condition of the protection devices may be a factor in the overall evaluation of Item 60 — Substructure. If Item 38 — Navigation Control has been coded 0 or N, leave blank to indicate not applicable.

Code	Description
1	Navigation protection not required
2	In place and functioning
3	In place but in a deteriorated condition
4	In place but reevaluation of design suggested
5	None present but reevaluation suggested

Does this structure meet or exceed the minimum length specified to be designated as a bridge for National Bridge Inspection Standards purposes? The following definition of a bridge is used by AASHTO and is given in the NBIS, 23 CFR 650.3:

A structure including supports erected over a depression or an obstruction, such as water, highway, or railway, and having a track or passageway for carrying traffic or other moving loads, and having an opening measured along the center of the roadway of more than 20 feet between undercopings of abutments or spring lines of arches, or extreme ends of openings for multiple boxes; it may also include multiple pipes, where the clear distance between openings is less than half of the smaller contiguous opening.

Code	Description
Y	Yes
N	No

EXAMPLES:

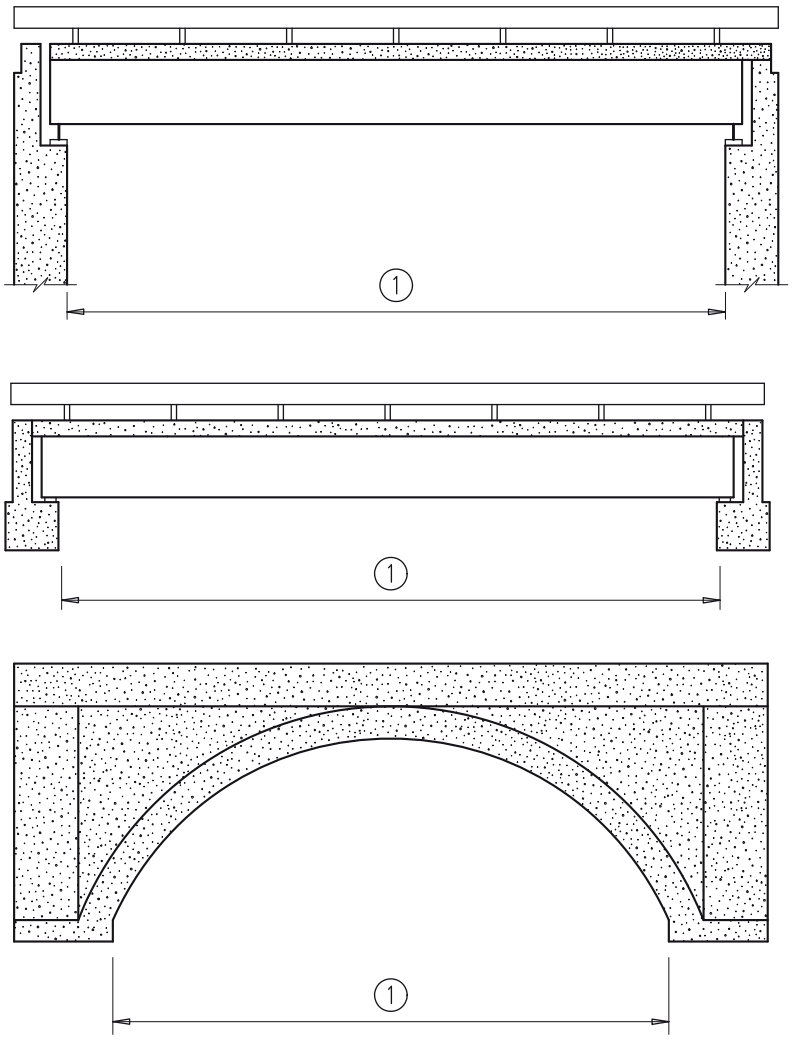

1 Item 112 ~ NBIS Bridge Length

Code "Y" if 1 is equal to or greater than 20'.

EXAMPLES:

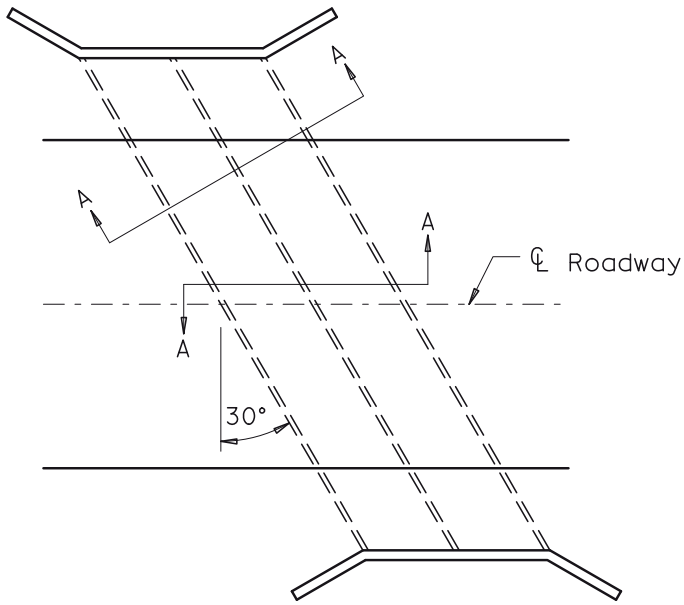

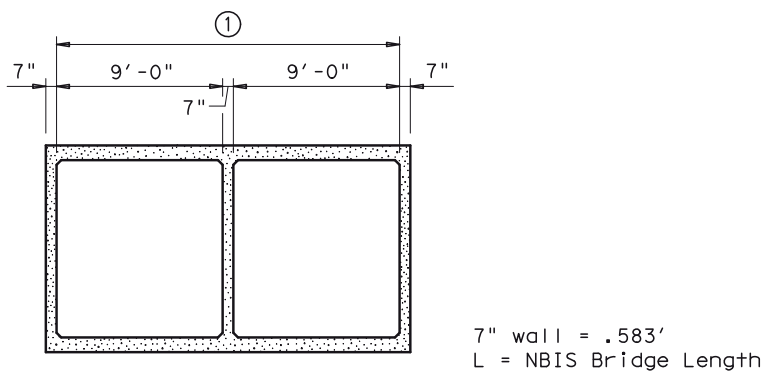

Section A-A

1 2 ~ 9.000' BBLS = 18.000' + .583' = 18.583'

$$\text{Item 112} - \frac{L}{\text{Cos } 30°} = \frac{18.583'}{.86603'} = 21.458' \text{ along ℄ (inside to inside)}$$

Code Item 112 = Y

See the June 2020 Addendum (pg. A-2 - A-6) for guidance for coding of Item 113

Item 113 — Scour Critical Bridges Card 08 1 Digit

~~Use a single-digit code as indicated below to identify the current status of the bridge regarding its vulnerability to scour. Evaluations shall be made by hydraulic/geotechnical/structural engineers.Guidance on conducting a scour evaluation is included in the FHWA Technical Advisory T 5140.23 titled, "Evaluating Scour at Bridges. "[1]Detailed engineering guidance is provided in the Hydraulic Engineering Circular 18 titled "Evaluating Scour at Bridges. "[2]Whenever a rating factor of 2 or below is determined for this item, the rating factor for Item 60 – Substructure and other affected Items (i.e., load ratings, superstructure rating) should be revised to be consistent with the severity of observed scour and resultant damage to the bridge. A plan of action should be developed for each scour critical bridge (see FHWA Technical Advisory T 5140.23, HEC 18 and HEC 23[3]). A scour critical bridge is one with~~

~~abutment or pier foundation rated as unstable due to (1) observed scour at the bridge site (rating factor of 2, 1, or 0) or (2) a scour potential as determined from a scour evaluation study (rating factor of 3). It is assumed that the coding of this Item has been based on an engineering evaluation, which includes consultation of the NBIS field inspection findings.~~

~~**Code**~~	~~**Description**~~
~~N~~	~~Bridge not over waterway.~~
~~U~~	~~Bridge with "unknown" foundation that has not been evaluated for scour. Until risk can be determined, a plan of action should be developed and implemented to reduce the risk to users from abridge failure during and immediately after a flood event (see HEC 23).~~
~~T~~	~~Bridge over "tidal" waters that has not been evaluated for scour, but considered low risk. Bridge will be monitored with regular inspection cycle and with appropriate underwater inspections until an evaluation is performed ("Unknown" foundations in "tidal" waters should be coded U.)~~
~~9~~	~~Bridge foundations (including piles) on dry land well above flood water elevations.~~
~~8~~	~~Bridge foundations determined to be stable for the assessed or calculated scour condition. Scour is determined to be above top of footing (Example A) by assessment (i.e., bridge foundations are on rock formations that have been determined to resist scour within the service life of the bridge[4]), by calculation or by installation of properly designed countermeasures (see HEC 23).~~
~~7~~	~~Countermeasures have been installed to mitigate an existing problem with scour and to reduce the risk of bridge failure during a flood event. Instructions contained in a plan of action have been implemented to reduce the risk to users from a bridge failure during or immediately after a flood event.~~
~~6~~	~~Scour calculation/evaluation has not been made. (Use only to describe case where bridge has not yet been evaluated for scour potential.)~~
~~5~~	~~Bridge foundations determined to be stable for assessed or calculated scour condition. Scour is determined to be within the limits of footing or piles (Example B) by assessment (i.e.,bridge foundations are on rock formations that have been determined to resist scour within the service life of the bridge), by calculations or by installation of properly designed countermeasures (see HEC 23).~~
~~4~~	~~Bridge foundations determined to be stable for assessed or calculated scour conditions; field review indicates action is required to protect exposed foundations (see HEC 23).~~
~~3~~	~~Bridge is scour critical; bridge foundations determined to be unstable for assessed or calculated scour conditions:~~ ~~- Scour within limits of footing or piles. (Example B)~~ ~~- Scour below spread-footing base or pile tips. (Example C)~~
~~2~~	~~Bridge is scour critical; field review indicates that extensive scour has occurred at bridge foundations, which are determined to be unstable by:~~ ~~- a comparison of calculated scour and observed scour during the bridge inspection, or~~ ~~- an engineering evaluation of the observed scour condition reported by the bridge inspector in Item 60.~~
~~1~~	~~Bridge is scour critical; field review indicates that failure of piers/abutments is imminent. Bridge is closed to traffic. Failure is imminent based on:~~ ~~- a comparison of calculated and observed scour during the bridge inspection, or~~ ~~- an engineering evaluation of the observed scour condition reported by the bridge inspector in Item 60.~~
~~0~~	~~Bridge is scour critical. Bridge has failed and is closed to traffic.~~

~~[1] FHWA Technical Advisory T 5140.23, Evaluating Scour at Bridges, dated October 28, 1991.~~
~~[2] HEC 18, Evaluating Scour at Bridges, Fourth Edition.~~
~~[3] HEC 23, Bridge Scour and Stream Instability Countermeasures, Second Edition.~~
~~[4] FHWA Memorandum "Scourability of Rock Formations," dated July 19, 1991.~~

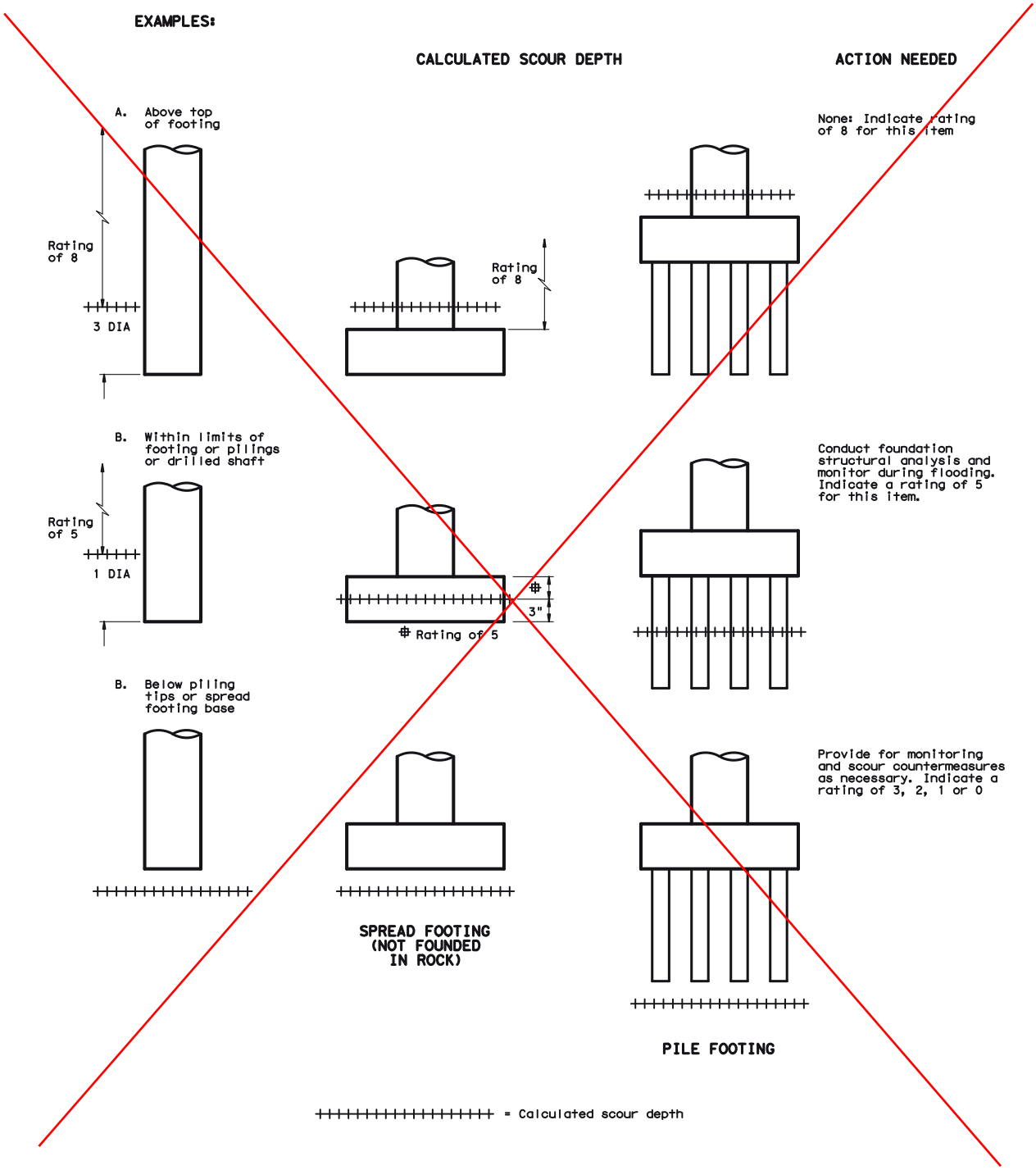
EXAMPLES:
CALCULATED SCOUR DEPTH
ACTION NEEDED
A. Above top of footing
Rating of 8
3 DIA
Rating of 8
None: Indicate rating of 8 for this item
B. Within limits of footing or pilings or drilled shaft
Rating of 5
1 DIA
3"
Rating of 5
Conduct foundation structural analysis and monitor during flooding. Indicate a rating of 5 for this item.
B. Below piling tips or spread footing base
Provide for monitoring and scour countermeasures as necessary. Indicate a rating of 3, 2, 1 or 0
SPREAD FOOTING (NOT FOUNDED IN ROCK)
PILE FOOTING
= Calculated scour depth

See the June 2020 Addendum (pg A-2 - A-6) for guidance for coding of Item 113.1

Item 113.1 — Scour Plans of Action/Unknown Foundations Card 08 1 Digit

~~Item 113.1 coding will be input by Bridge Division only. *DO NOT ATTEMPT TO CODE.* Coding for this item is shown for reference only.~~

~~**Code**~~	~~**Description**~~
~~A~~	~~Bridge foundation is unknown. Screening indicates low risk of scour. Item 113 coded 5.~~
~~B~~	~~Bridge foundation is unknown. Screening indicates that bridge is scour critical. Item 113 coded 2 or 3. Plan of Action is in place.~~
~~C~~	~~Bridge foundation is unknown. Screening indicates that bridge is scour critical. Item 113 coded 2 or 3. No Plan of Action in place.~~
~~D~~	~~Bridge foundation is unknown. Bridge is closed to traffic or has failed. Item 113 coded 0 or 1. Plan of Action in place.~~
~~E~~	~~Bridge foundation is unknown. Bridge is closed to traffic or has failed. Item 113 coded 0 or 1. No Plan of Action in place.~~
~~P~~	~~Plan of action has been written and implemented.~~

Item 114 — Future Average Daily Traffic Card 09 6 Digits

Code for all bridges the forecasted average daily traffic (ADT) for the inventory route identified in Item 5. This shall be projected at least 17 years, but no more than 22 years, from the year data is submitted to the NBI. The intent is to provide a basis for a 20-year forecast. This item may be updated anytime, but must be updated when the forecast falls below the 17-year limit. If planning data is not available, use the best estimate based on site familiarity. Use current ADT (Item 29) if a projected ADT is not available. See Item 115 for year.

The future ADT must be compatible with the other items coded for the bridge. For example, parallel bridges are coded as follows: If Item 28 — Lanes On and Under the Structure and Item 51 — Bridge Roadway Width, Curb-to-Curb are coded for each bridge separately, then the future ADT must be coded for each bridge separately, not the total for the route.

EXAMPLES:

Future ADT	Code
540	000540
15,600	015600
240,000	240000

Item 114A — Intersecting Route
Future Average Daily Traffic (ADT) Card 11 6 Digits

Enter the forecasted ADT for the intersecting route. This shall be at least 17 years, but no more than 22 years, from the year the data is submitted to the NBI. The intent is to provide a basis for a 20-year forecast. This item may be updated any time, but must be updated when the forecast falls below the 17-year limit. If planning data is not available, use the best estimate based on site familiarity. Use current ADT if a projected ADT is not available. See Item 115A for year.

The future ADT must be compatible with other items coded for the bridge; for example, if parallel bridges have the present ADT coded separately for each bridge, then the future ADT must be coded for each bridge separately, not the total for the route. Code with the necessary leading or trailing zeros.

EXAMPLES:

Future ADT	Code
540	000540
15,600	015600
240,000	240000

Item 115 — Year of Future Average Daily Traffic Card 09 4 Digits

Code the year represented by the future ADT in Item 114. The projected year of future ADT shall be at least 17 years, but no more than 22 years, from the year data is submitted to the NBI.

EXAMPLE:

Year of Future ADT	Code
2021	2021

Item 115A — Intersecting Route
Year of Future Average Daily Traffic (ADT) Card 11 4Digits

Code the year represented by the future ADT in Item 114A.

EXAMPLES:

Year of Future ADT	Code
2019	2019

Item 116 — Minimum Navigation Vertical Clearance
Vertical Lift Bridge (xxx feet) Card 09 3 Digits

Record to the nearest foot (rounding down) the minimum vertical clearance imposed at the site as measured above a datum that is specified on a navigation permit issued by a control agency. Code this item only for vertical lift bridges in the dropped or closed position, otherwise leave blank.

EXAMPLES:

Vertical Clearance	Code
20.6	020
24.2	024

Item 119 — Cost of Original Construction Card 07 8 Digits

Code the original cost of construction. This cost will include preliminary engineering and construction engineering. This shall be coded by the district.

Item 120 — Deficient/Obsolete Code 1 Digit

This item will be calculated by program and supplied to the Bridge Inventory, Inspection and Appraisal File output. This item is shown on the input form for reference only. *DO NOT ATTEMPT TO CODE.*

Item **121 — Sufficiency Rating** 4 Digits

The sufficiency rating will be calculated by program and supplied to the Bridge Inventory, Inspection and Appraisal File output. This item is shown on the input form for reference only. *DO NOT ATTEMPT TO CODE.*

Item **121.1 — Sufficiency Rating Flag** 1 Digit

The sufficiency rating flag will be calculated by program and supplied to the Bridge Inventory, Inspection and Appraisal File output. This item is shown on the input form for reference only. An '*' appears to the left of the sufficiency rating if there were missing/invalid field(s) to calculate the sufficiency rating and defaults were used. ***DO NOT ATTEMPT TO CODE***

Item 126 — District Use Fields Card 09 20 Digits

Each district may use these 20 digits as they choose. Information submitted in these 20 digits will be kept as part of the permanent record until changed or until that particular bridge is deleted from the file. Note: Each digit may be used as a single byte of information or the complete Item as a descriptive field. Use upper case "X" to remove data. Use lower case "x" with text description.

Item 127 — Inventory Route Reason for Change Card 12 01 Digits

When a change to the Inventory Route Key Identification occurs, a reason for change shall be coded. Any change to Items 2, 3, 8.4, 8.5, 8.6, 8.3, or 5.1 will create the need to code the Reason for Change.

This reason for change is required by and furnished to the National Bridge Inspection File (NBI) in Washington. See also Item 127A (Intersecting Route Reason for Change).

Note: Item 2 — District Number and Item 3 — County Number cannot be changed on Card 12. Please notify BRG if this type of change is required. Code one of the following in Column 24 of Card 12.

Code	Description
(A)	Replaced by New Bridge
(B)	District Number Changed
(C)	County Number Changed
(D)	Control Number Changed
(E)	Section Number Changed
(F)	Bridge Number Changed
(G)	Duplicate Route Changed
(H)	Structure Function Change
(I)	Administrative Change — (changed from city to county or county to city or control section change)
(J)	Hierarchy Change — (Highway Number change or Highway Route change)
(K)	Correction of Error (not listed above)

Item 127A-Intersecting Route Reason for Change Card 12 01 Digits

When a change to the Intersecting Route Key Identifier occurs, a reason for change shall be coded.

Key Identification for the Intersecting Route are Items 8.4A, 8.5A, 8.6A, 8.3A or 5.1A. District Item 2 and County Number, Item 3, are coded on the Inventory Route. If District or County Number are changed on the Inventory Route, please notify BRG of the intersecting route change, also.

Code one of the following in Column 37, Card 12.

Code	Description
(A)	Replaced by New Bridge
(B)	District Number Changed
(C)	County Number Changed
(D)	Control Number Changed
(E)	Section Number Changed
(F)	Bridge Number Changed
(G)	Duplicate Route Changed
(H)	Structure Function Change
(I)	Administrative Change — (changed from city to county or county to city or control-section structure number change)
(J)	Hierarchy Change — (Highway Number change or Highway Route change)
(K)	Correction of Error — (not listed above)

Item 128 — Over Height Load Damage Card 6 1 Digit

Coding for this item will be determined by field inspections and accident reports. This item will be used in the design phase of rehabilitation and widening projects.

Code	Description
N	No damage to beam(s) or beam members.
Y	Bridge has damage to beam(s) or beam members. Requires in-depth analysis.

If Y is coded, the following information shall be kept with the current inspection data: measured length and depth of any patches to concrete or prestressed beam(s) and related members, and the number of severed strands on prestressed beams should be documented where possible. For steel structures, the straightening or patches to steel members are to be recorded. Visual quality of repair welding shall be documented. Where possible, photographs should accompany written documentation. If culvert, leave this field blank.

PROCEDURE FOR INSPECTING AND MAINTAINING BRIDGE RECORDS THAT ARE NOT IN THE OWNING DISTRICT'S BOUNDARY

A district that inspects bridges in another district cannot update those bridges. The county numbers are outside the established range for that district. The update of these bridge records can be accomplished by using one of the following procedures:

A. The inspecting district can contact the owning district when the data on a bridge or bridges are entered in a library member.

   1. If the owning district and the inspecting district are within the same regional center, the library member can be "fetched."

   2. If they are not within the same regional center, you must do a ROSCOE-to-ROSCOE transfer using RJEJCL (select 40 1) to send the transactions to the owning district.

B. The inspecting district can also have BRG update the records by using a ROSCOE-to-ROSCOE transfer to send transactions to a BRG library. If you choose this method:

   1. The destination computer ID will be "CENTRAL."

   2. The destination ROSCOE key will be "D884522."

   3. The naming convention of the member being sent should be as follows:

      a. On-system transactions: DIXXON (where XX is the district number).

      b. Off-system transactions: DIXXOFF (where XX is the district number).

NOTE: Transactions can only be sent one time per week or the second transfer will write over the first. Transactions will be deleted each Friday after being applied to the Thursday night update run.

For reports, each district can use RJEJCL to select one of the following:

A. Select 6 and either 1 or 2 to execute Program 120179 which accesses the Roadway Information System (RIS) file. This lets you view or print the records which are currently in the file.

B. Select 32 and 22 to execute Data on Terminal (DOTS) programs. Error messages contained on DOTS reports can be corrected in one of the following ways:

   1. The owning district can FAX a copy of the error messages to the inspecting district.

   2. If a printer ID is known, the output can be printed locally then sent to the inspecting district's printer.

   3. You may also contact BRG for a copy of the error report.

All districts involved must communicate with each other and BRG so that all records are updated in a timely manner.

Coding of Item 31

Code	Description
0	Unknown: (No plans or plans/sketch with no stated design load)
1	H 10
2	H 15
3	HS 15
4	H 20
5	HS 20 (Also used for plans with MS 18 and H 20-S16)
6	HS 20 + Mod ('Mod' indicates the inclusion of military loading. This code also used for plans with MS 18 + Mod)
7	Pedestrian
8	Railroad
9	HS 25 or greater / MS 22.5 or greater ("9" represents AASHTO loading in HS or MS configurations of HS 25 or greater and MS 22.5 or greater.)
A	HL93
B	Greater than HL93 ("B" represents AASHTO loading in HL configuration where the loading is greater than HL93.)
C	Other ("C" represents any design live load not based on an AASHTO configuration including any design amended by THD supplement No. 1.)

Coding of Items 63 and 65.1

Code	Description
0	Assumed ratings based on field evaluation and documented engineering judgement
1	Calculated ratings based on Load Factor (LF)
2	Calculated ratings based on Allowable Stress (AS) (Also known as Working Stress – WS)
3	Calculated ratings based on Load and Resistance Factor (LRFR)
4	Load Testing
5	No rating analysis or evaluation performed **(does not apply to assigned ratings)**
*6	Calculated Load Factor (LF) rating reported by rating factor method using HS 20 loading
*7	Calculated Allowable Stress (AS) rating reported by rating factor method using HS 20 loading
*8	Calculated Load and Resistance Factor Rating (LRFR) reported by rating factor method using HL93 loading
A	Assigned rating based on Load Factor Design (LFD) reported in tons
B	Assigned ratings based on Allowable Stress Design (ASD) reported in tons
C	Assigned ratings based on Load and Resistance Factor Design (LRFD) reported in tons
*D	Assigned rating based on LFD; reported by rating factor using HS 20 loading
*E	Assigned ratings based on ASD; reported by rating factor using HS 20 loading
*F	Assigned ratings based on LRFD; reported by rating factor using HL93 loadings

*Note: Codes 6, 7, 8, D, E, and F (shaded red) are not currently used in Texas.

Item 113 – Scour Critical Bridges Card 08 1 Digit

Use a single-digit code as indicated below to identify the current status of the bridge regarding its vulnerability to scour. A scour critical span bridge is one with major foundation exposure related to observed or calculated scour (*i.e.*, Item 113 = 0, 1, 2, or 3). A scour critical bridge-class culvert is one with major exposure and/or undermining caused by erosion/piping/scour.

If major foundation exposure is observed (*i.e.*, Item 113 = 0, 1, or 2), then Item 60, "Substructure" must receive the same coding as Item 113; major foundation exposure governs the overall condition of the entire substructure.

"Calculated scour depth" is a prediction – it is the result of a scour evaluation based on analysis. "Observed scour depth" refers to current conditions recorded during a physical inspection. "Maximum allowable scour depth" is a structural property of the foundation which indicates how much scour can occur before the foundation becomes unstable. Refer to the TxDOT Scour Evaluation Guide for more information about calculated, observed, and maximum allowable scour depths. FHWA guidance for evaluating scour at bridges is available in Technical Advisory 5140.23 and Hydraulic Engineering Circular No. 18.

Code	Descriptions for Span Bridges
N	Bridge is not over waterway.
U	Unknown foundation and lacking scour evaluation and/or documentation.
T	Over tidal waters and lacking scour evaluation and/or documentation.
9	All foundation components, including piles or shafts, are above flood waters.
8	The calculated scour depth (if applicable) would cause minimal foundation exposure. The observed scour depth has caused minimal foundation exposure.
7	Previously observed scour has been remediated: countermeasures have been installed and are performing well.
6	Lacking scour evaluation and/or documentation. Refer to the TxDOT Geotechnical Manual for scour evaluation and documentation requirements.

5 The calculated scour depth would cause moderate foundation exposure. The observed scour depth causes minimal foundation exposure.

4 The observed scour has caused moderate foundation exposure. The calculated scour would cause minimal or moderate foundation exposure. Action is required to address the observed scour.

3 The calculated scour depth would cause major foundation exposure. The observed scour has caused minimal or moderate foundation exposure. A Bridge Scour Plan of Action for Bridges with Item 113 Coded “3” (Form 2604) is required.

2 Observed scour has caused major foundation exposure. Immediate action is required to remediate the observed scour. A Bridge Scour Plan of Action for Bridges with Item 113 Coded “2” (Form 2624) is required.

1 Observed scour exceeds the max allowable scour depth. Failure is imminent and the bridge is closed to traffic. A Bridge Scour Plan of Action for Bridges with Item 113 Coded “1” (Form 2609) is required.

0 Failure has occurred and the bridge is closed to traffic.

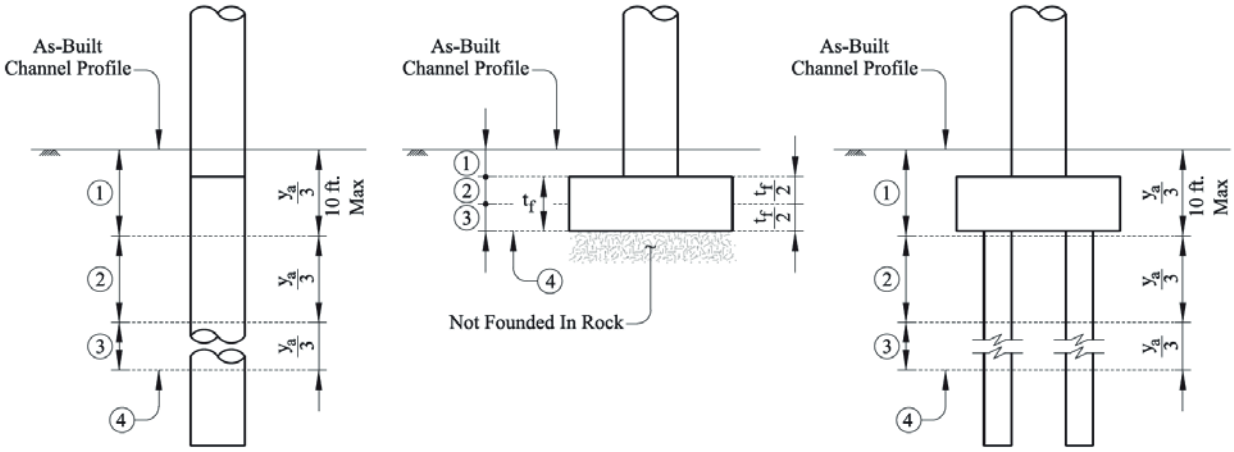

1 Minimal Foundation Exposure 2 Moderate Foundation Exposure 3 Major Foundation Exposure 4 Max Allowable Scour Depth (y_a)

Code Descriptions for Bridge-Class Culverts

N Culvert does not span a waterway.

U [not applicable for culverts]

T [not applicable for culverts]

9 [not applicable for culverts]

8 Refer to the table and figures below.

7 Previously observed scour has been remediated: countermeasures have been installed and are performing well.

6 Lacking scour evaluation and/or documentation. Refer to the TxDOT Geotechnical Manual for scour evaluation and documentation requirements.

5 [not applicable for culverts]

4 Refer to the table and figures below.

3 [not applicable for culverts]

2 Refer to the table and figures below. A Bridge Scour Plan of Action for Bridges with Item 113 Coded "2" (Form 2624) is required.

1 Failure is imminent and the bridge-class culvert is closed to traffic. A Bridge Scour Plan of Action for Bridges with Item 113 Coded "1" (Form 2609) is required.

0 Failure has occurred and the bridge-class culvert is closed to traffic.

Item 113 Coding	Exposure and/or Undermining Category	*Choose the Most Critical Mechanism*			
		Culvert/Pipe Undermining	Culvert/Pipe Toewall Exposure	Apron Undermining	Apron Toewall Exposure
8	Minimal	< 1 ft.	$< {}^{1}/_{3}\ H_{t,c}$	$< {}^{1}/_{5}\ L_a$	$\leq H_{t,a}$
4	Moderate	1 – 3 ft.	$\leq H_{t,c}$	${}^{1}/_{5}\ L_a - {}^{3}/_{5}\ L_a$	$> H_{t,a}$
2	Major	> 3 ft.	$> H_{t,c}$	$> {}^{3}/_{5}\ L_a$	-

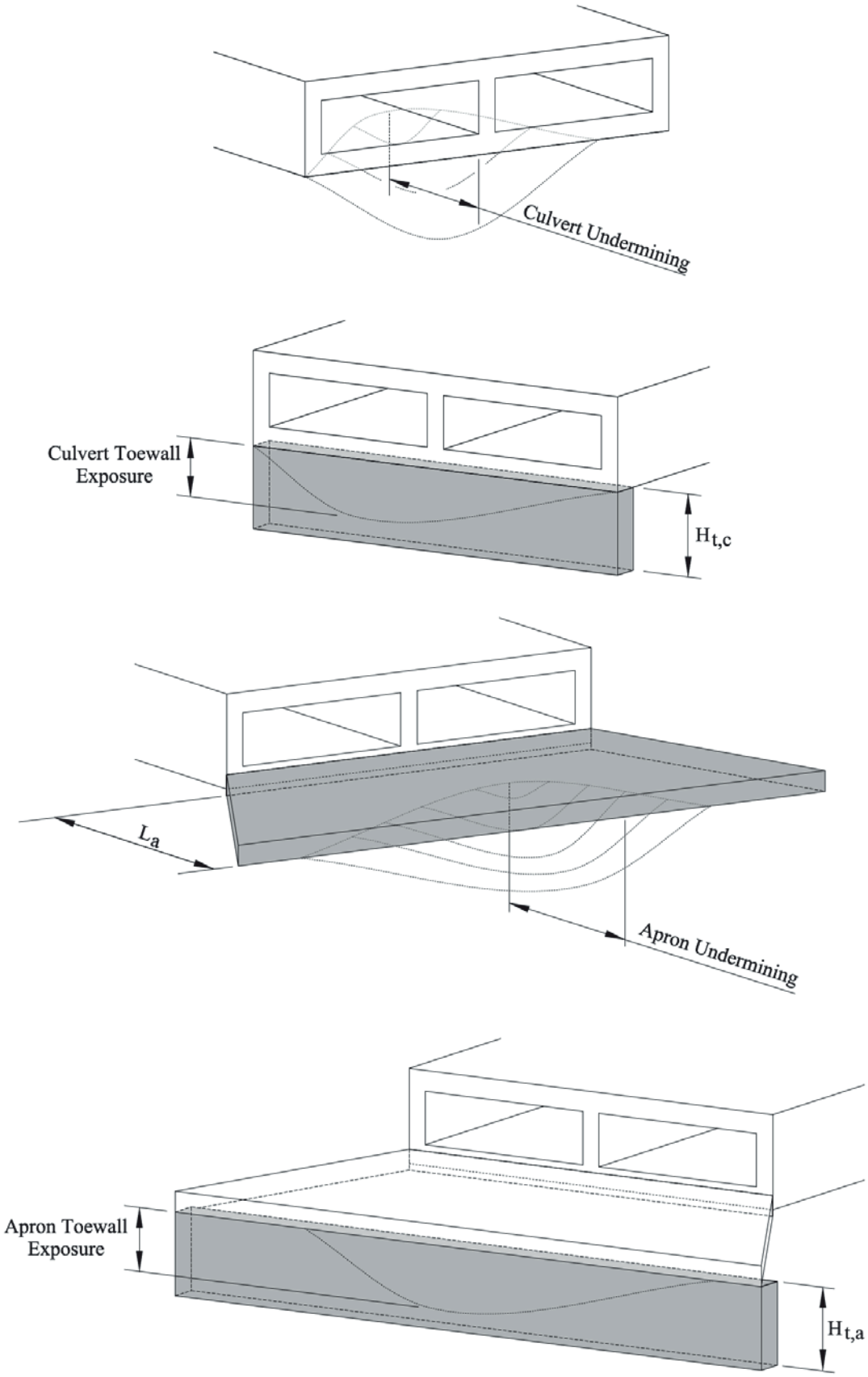
Culvert Undermining
Culvert Toewall
Exposure
$H_{t,c}$
L_a
Apron Undermining
Apron Toewall
Exposure
$H_{t,a}$

Item 113.1 – Scour Plan of Action	Card 08	1 Digit

A Bridge Scour Plan of Action is only required if the structure is scour critical. If Item 113 > 3, or if Item 113 = N, then Item 113.1 should be blank.

Code	Descriptions
Blank	A Bridge Scour Plan of Action has not been documented or implemented. (This coding may be applied when a Bridge Scour Plan of Action is required but is missing in AssetWise, or when a Bridge Scour Plan of Action is not required.)
P	A Bridge Scour Plan of Action and Form 2607, "Plan of Action Follow-Up" have been uploaded to the bridge's AssetWise folder. The plan of action is underway, and implementation efforts are being documented on the Plan of Action Follow-Up worksheet.

Item 113.2 – Unknown Foundations	Card 08	1 Digit

Code	Descriptions
Blank	All of the bridge's abutment and bents are supported by known foundations. This includes any culvert with a bottom slab; unknown toewall height does not constitute an unknown foundation.
U	At least one of the bridge's abutments or interior bents is supported by an unknown foundation. This includes bottomless culverts with unknown wall height and foundations that are visible above ground, but whose depths are unknown.