Preferred Practices for Steel Bridge Design, Fabrication, and Erection

June 2019

Texas Department of Transportation

TEXAS STEEL QUALITY COUNCIL

Table of Contents

1. Introduction 1-1
1.1. Overview 1-1
1.2. Revision History 1-1

2. Design 2-1
2.1. Preliminary Design Considerations 2-1
2.1.1. Steel Grade Selection 2-1
2.1.2. Proper Use of Weathering Steel (A 709 Grades 50W and HPS 70W) 2-2
2.1.3. Paint 2-4
2.1.4. Span Configuration 2-4
2.1.5. Expansion Joints 2-5
2.1.6. Girder Spacing (Plate Girders, Tub Girders, and Rolled Beams) 2-6
2.1.7. Available Length of Material 2-6
2.2. Plate Girders 2-6
2.2.1. Flange Width 2-7
2.2.2. Flange Thickness 2-7
2.2.3. Flange Splice Locations 2-9
2.2.4. Web Depth 2-9
2.2.5. Web Thickness 2-10
2.2.6. Web Splice Locations 2-10
2.2.7. Web-to-Flange Welding 2-11
2.2.8. Stiffeners 2-11
2.2.9. Bearings 2-12
2.2.10. Field Splices 2-12
2.3. Rolled Beam Sections 2-14
2.3.1. Sections 2-14
2.3.2. Stiffeners 2-15
2.3.3. Bearings 2-15
2.3.4. Field Splices 2-15
2.3.5. Camber 2-15
2.4. Tub Girder Sections 2-15
2.4.1. Flanges 2-16
2.4.2. Webs 2-17
2.4.3. Stiffeners 2-18
2.4.4. Top Flange Lateral Bracing 2-18
2.4.5. External Diaphragms and Cross-Frames (between Piers) 2-18
2.4.6. Internal Diaphragms and Cross-Frames (between Piers) 2-19
2.4.7. Pier Diaphragms and Cross-Frames 2-19
2.4.8. Field Splices 2-20
2.4.9. Bearings 2-20
2.4.10. Electrical Service and Inspection Access 2-21
2.5. Box Girder Sections (Closed Boxes for Straddle Bents) 2-21
2.5.1. Flanges 2-21

2.5.2. Webs 2-22
2.5.3. Stiffeners 2-22
2.5.4. Bearings 2-23
2.5.5. Field Splices 2-23
2.5.6. Flange-to-Web Welding 2-23
2.6. Diaphragms and Cross-Frames 2-24
2.6.1. Member Selection 2-25
2.6.2. Stage Construction and Skews 2-26
2.6.3. Diaphragm and Cross-Frame Orientation 2-26
2.7. Bolted Connections 2-26
2.7.1. Slip Coefficient 2-27
2.7.2. F3125 Grade A325 vs. F3125 Grade A490 Bolts 2-27
2.8. Anchor Bolts and Rods 2-28
2.9. Shear Connector Studs 2-28
2.10. Design Details 2-29
2.11. Bearing Replacement 2-29
2.12. Bent Locations for Replacement or Widening 2-30

3. Fabrication 3-1
3.1. Shop Drawings 3-1
3.1.1. Shop Drawing Review 3-1
3.1.2. Distribution of Approved Shop Drawings 3-1
3.1.3. Shop Camber Checking 3-1
3.2. Non-Destructive Testing 3-1
3.2.1. Use of Edge Blocks for Radiographs 3-1
3.3. Cleaning and Painting 3-2
3.3.1. Painting Box and Tub Girder Interiors 3-2
3.3.2. Painting of Faying Surfaces 3-2

4. Erection/Construction 4-1
4.1. Shipment of Bolts 4-1
4.2. Condition of Weathering Steel Bolted Splice Faying Surfaces 4-1

A. TxDOT Painting Practices A-1
A.1. Steel Painting Construction Specifications A-1
A.6. Common Paint Questions A-11
A.7. Containment A-14
A.8. Hazard Waste A-15
A.9. Galvanized Steel A-17
A.10. Colors A-17

B. Paint Durability Questionnaire B-1

1. Introduction

1.1. Overview

This document provides guidance to help steel bridge designers working on Texas Department of Transportation (TxDOT) projects to achieve optimal quality and value in steel bridges.

It is maintained by the Texas Steel Quality Council, which is a joint owner-industry forum, comprised of the following:

- TxDOT design, fabrication, and erection engineers; TxDOT inspectors
- FHWA bridge engineers
- Academics
- Steel bridge fabricators, detailers, and trade association representatives
- Steel mill representatives; and design consultants.

The Council meets regularly in an open forum to discuss best practices for achieving the best steel bridges, and this document reflects the Council's agreements.

Open and informed participation by representatives from all aspects of steel bridge construction is instrumental to the Council's success, and the Council welcomes and encourages all comments. Submit comments and suggestions to the TxDOT Steel Quality Council, c/o the Texas Department of Transportation, Bridge Division, 125 E. 11th St., Austin, Texas, 78701-2483, or send comments by email to greg.turco@txdot.gov.

1.2. Revision History

Version	Publication Date	Summary of Changes
1	November 2000	New Document
2	October 2005	Updated to accommodate AASHTO Load and Resistance Factor Design (LRFD) specifications.
3	January 2006	Added reference to National Steel Bridge Alliance (NSBA) publication and updated reference to information on distribution of approved shop drawings.
4	April 2009	Updated various internet links.
5	February 2015	Updated Chapter 2 and 3 to correlate with the 2014 TxDOT Standard Specifications. Updated Chapter 2 to reflect recent research findings.
6	June 2019	Updated Chapter 2 references for NSBA, web dapping guidance, and field splice requirements. Added reference to Structural Redundant Members (SRM's) in 2.4. Added guidance on erection bolt checks in 2.7. Updated bolt material specification and slip coefficients in 2.7. Updated Figure 3-1 to match TxDOT SGMD Standard. Appendix A replaced.

2. Design

2.1. Preliminary Design Considerations

The success of a steel bridge design depends on the preparation of the designer:

- Have a well founded knowledge of design specifications.
- Be familiar with the construction and fabrication specifications and standard drawings that apply to steel structures.
- Be aware of construction and fabrication specifications' influence on design and any modifications or special provisions they may require.
- Take time during initial decision making to consult with fabricators, steel erectors, and contractors for ideas on achieving economical, easily built designs.
- While designing, think about how everything fits together—for example, how rotation, deflection (especially differential deflection), twist, stiffness (vertical bending, lateral bending, and torsion), and skew affect interaction between different elements.
- Always provide clear and distinct load paths that mitigate or, preferably, eliminate out-of-plane bending.
- Always provide enough access for bolting, welding, and painting. Keep designs simple by maximizing the use of common details and minimizing the number of plate sizes and rolled shapes fabricators are required to purchase. Complicated details are always hard to fabricate and build.
- Never use details that permit water and debris to collect on girders.

Designs that merely satisfy design specifications are rarely good. Good designs reflect consideration of the requirements of fabrication, construction, and maintenance.

2.1.1. Steel Grade Selection

If it is acceptable for the location, use weathering steel (A 709 Grades 50W and HPS 70W) left unpainted. FHWA Technical Advisory T 5140.22 and Section 2.1.2.3 of this document provide guidelines on acceptable locations. Some TxDOT districts object to the use of weathering steel, so obtain district approval before using weathering steel in a design.

Although weathering steel is slightly more expensive initially than non-weathering steel, it is ultimately more economical because it does not require initial or maintenance painting.

Weathering steel performs as well but not better than non-weathering steel in painted applications, so avoid requiring weathering steel in painted applications. Fabricators

may prefer to use weathering steel for painted bridges, and TxDOT allows substitution of weathering steel for non-weathering steel if all other material requirements are satisfied.

Avoid using hybrid girders consisting of A 709 Grade 36 webs with A 709 Grade 50 flanges for painted bridges. Although these hybrids may seem economical, the cost difference of the two grades of steel is actually minimal.

In contrast, A 709 Grade HPS 70W may be economical only in hybrid girders. With Grade 50W webs, use a hybrid configuration with HPS 70W tension flanges and HPS 70W compression flanges in negative moment regions. Electroslag welding, which saves a considerable amount of fabrication time and money, cannot be used with high performance steel. The use of HPS 70W steel may be restricted by:

- The fact that its stiffness is not increased over lesser grades.
- Its availability. Do not specify HPS 70W steel in a design unless availability is verified with local fabricators—for example, rolled sections are currently not available in this steel.

A 709 Grade HPS 50W is also a high performance steel, but TxDOT does not recommend designs requiring its use.

A 709 Grade 50S (bridge steel equivalent to A 992) is acceptable for painted rolled beam bridges and anywhere structural shapes are used in painted applications.

Avoid using A 709 Grade 100 or 100W steel; Grade 100 steel has no real application for Texas because typical bridges are short- and medium-span bridges. Use A 709 Grade HPS 100W if 100-ksi steel is needed.

For cost analyses in the design phase, use the actual price of steel per pound instead of a typical bid price per pound. Fabricators, steel suppliers, or American Institute of Steel Construction (AISC) can be consulted during the design phase of a job to provide the latest information about steel costs.

2.1.2. Proper Use of Weathering Steel (A 709 Grades 50W and HPS 70W)

With the proper details, good performance from weathering steel can be achieved to reduce or eliminate unsightly concrete staining. For detailed recommendations, see TxDOT's report on Project 0-1818, “Performance of Weathering Steel in TxDOT Bridges,” Chapter 4.

2.1.2.1. Design Strategies

Provide drip plates (also called drip tabs) to divert runoff water and protect abutments and columns from staining. Provide them on every girder because staining may occur before slab placement. Consider what the diverted water will stain—for example, do not place drip plates so close to substructure elements that wind blows diverted water onto the substructure. Drip plates over concrete riprap at bridge embankments cause stain

spots on the riprap, but the alternative is widespread staining of both the abutment and riprap.

If necessary, provide stainless steel drip pans to protect abutments and columns. Doing so is impractical with large tub girders and may not be necessary for plate girders with good drip plate details.

Provide details that take advantage of natural drainage.

Provide adequate drainage beneath overpass structures to prevent ponding and continual traffic spray from below. Communicate the importance of adequate drainage to roadway designers.

Provide stiffener clips for proper ventilation and drainage. The stiffener clips shown on TxDOT standard drawings SGMD, “Steel Girder Miscellaneous Details (Steel Girders and Beams),” and SBMD, “Steel Beam Miscellaneous Details,” are adequate for this purpose.

Eliminate details that retain water, dirt, and other debris.

Do not detail deck drains that can discharge water onto the steel, especially in regions that use de-icing chemicals.

Either completely seal box or tube members or provide adequate drainage and venting to allow condensation in unsealed tubular and box sections to dissipate. See Section 2.5 for more on this subject.

Use sealed expansion joints. See Section 2.1.5 for more guidance on expansion joints. Avoid any type of open joint that allows runoff to reach the steel.

Specify application of an adequate protective coating to surfaces that may be subject to standing water. However, avoid details that create this situation.

Specify application of an adequate protective coating to weathering steel that will be embedded in soil or gravel pockets. The coating should be one of the types used on carbon steel in the same environments, and it should extend above the interface of the embedment for several inches.

2.1.2.2. Fabrication and Construction

The 2014 TxDOT Standard Specifications require the following:

- Fabricators must blast clean (SSPC-SP 6) fascia surfaces of unpainted weathering steel elements before shipping them.
- The Contractor must spot clean fascia steel surfaces in the field after the slab concrete has been placed.

Eliminate identification and other markings on the outside face of any fascia beam, including any markings placed during erection.

2.1.2.3. When Not to Use Weathering Steel

Do not use weathering steel in the following conditions:

- If the atmosphere contains concentrated corrosive industrial or chemical fumes.
- If the steel is subject to heavy salt-water spray or salt-laden fog.
- If the steel is in direct contact with timber decking; timber retains moisture and may have been treated with corrosive preservatives.
- If the steel is used for a low urban-area bridge or overpass that creates a tunnel-like configuration over a road on which deicing salt is used. In this situation, road spray from traffic under the bridge causes salt to accumulate on the steel.
- If the location has high rainfall and humidity or is constantly wet. This situation is rare in Texas.
- If the structure provides low clearance (less than 8 to 10 feet) over stagnant or slow-moving water.

2.1.3. Paint

Please consult with Bridge Division or Construction Division when choosing a painting system other than the default painting systems shown in the 2014 TxDOT Standard Specifications. The default paint systems for new steel (Item 441) bridge construction:

- Marine environment - System III-B – three-coat system with inorganic zinc (IOZ) primer
- Non-marine environment - System IV—two-coat system with inorganic zinc primer

Item 446, “Field Cleaning and Painting Steel,” provides a more detailed description of these systems. Refer to Appendix A for further information.

TxDOT Standard Specifications require the inside of all tub and box girders to be painted with a light-colored paint (white polyamide cured epoxy) to facilitate future inspection. This paint is not intended to provide corrosion protection.

2.1.4. Span Configuration

Span configuration plays an important role in the efficient use of steel. Two-span continuous girders are not efficient because of high negative moments. However, they can be economical if maximizing prestressed concrete beam approaches leaves only enough room for a two-span continuous unit to fill in the remainder of the structure. Three- and four-span units are preferable but not always possible. Units with more than four spans are not recommended. For three- and four-span units, make interior spans about 20 to 30 percent longer than end spans.

2.1.4.1. Uplift

If end spans are short in relation to interior spans, uplift can be a problem at the girder ends. If end spans are too long in relation to interior spans, a disproportionate amount of steel will be required for the end spans.

Always consider the presence of uplift at ends of continuous girders, particularly with light, rolled beam units or short end spans. Commentary to *AASHTO LRFD Bridge Design Specifications*, Article C3.4.1, indicates uplift to be checked as a strength load combination and provides guidance in the appropriate use of minimum and maximum load factors. Uplift restraint, when needed, should satisfy the Strength limit state and the Fatigue and Fracture limit state.

2.1.4.2. Simple Spans

Using a continuous slab with simple span girders, typically done in Texas with prestressed concrete girders, can be an economical framing method. Advantages over continuous girder designs include elimination of costly air splices and heavy lifts during girder erection. Construction is also faster with simple span girders than with continuous girders; however, a potential drawback is loss of internal redundancy. In addition, more section depth is required. Investigate this framing method on a case-by-case basis to determine if it is economical.

Another economical framing method may be the use of simple spans for dead load (beam and slab) and continuous for live load (and dead loads applied to the composite sections). TxDOT has done this with prestressed concrete I beams, but it did not prove economical. However, steel beams may be different if continuity details are simple enough. No detailed recommendations or suggestions are offered with this framing system.

2.1.5. Expansion Joints

Try to limit expanding lengths to allow use of standard strip seal expansion joints. Modular joints and finger joints are expensive and difficult to construct and maintain, and they have shown poor long-term performance; use them only as a last resort.

See TxDOT standard drawings SEJ-A, “Sealed Expansion Joint Details (Without Overlay),” for strip seal expansion joint details. TxDOT prefers the joint on the SEJ-A standard for most bridges. Ensure slab depth is adequate for this joint.

Consider using an inverted-T bent rather than a modular or finger joint if more thermal expansion than a 5-inch strip seal expansion joint’s capacity is needed. The stem of the inverted-T bent can be extended through the slab to become the finished riding surface. An expansion joint is then placed at each face. This type of bent is often designed with an assumed 6- or 8-inch riding surface placed on top of the stress-carrying cap after the bridge slabs in the adjacent units are placed. Use adequate reinforcing steel in the riding surface to accommodate live load strains. This technique can be used to eliminate finger or modular expansion joints. Aesthetics is a consideration, but a corbel can be designed with a shape that complements the rest of the bridge.

With a finger joint, use a trough consisting of a steel channel (C shape) and a deflector plate underneath the joint to direct water away from the girders. Neoprene troughs have been used in the past under finger joints but have performed poorly. The channel/deflector system should stop at slab edges and allow water to be discharged directly out low ends. Drain pipes are typically not necessary with this system, and if provided, they may quickly become clogged. Use a channel/deflector system on at least a 4-percent grade to ensure good drainage.

2.1.6. Girder Spacing (Plate Girders, Tub Girders, and Rolled Beams)

Many studies show that the weight of structural steel per square foot of deck area decreases as girder spacing increases. However, girder spacing (or web spacing with tub girders) should be limited to 10 feet for the following reasons:

- TxDOT standard drawings do not support girder spacings of more than 10 feet.
- Slabs (or floor systems) cannot adequately support certain overloads.
- Re-decking while maintaining traffic is more challenging.

When setting the girder spacing, also consider using prestressed concrete panels to form the deck (See TxDOT standard drawing PCP, “Prestressed Concrete Panels” and PCP-FAB, “Prestressed Concrete Panel Fabrication Details”). This deck-forming option is the most economical slab-forming method. TxDOT allows panels only on straight girders because TxDOT wants the stiffness full-depth cast-in-place decks provide for curved girders. However, TxDOT accepts use of prestressed panels for most straight girder applications with girder spacing of 10 feet or less.

TxDOT prefers a minimum of four I-shaped beams/girders for a vehicular bridge span. One reason for this is to simplify future redecking.

2.1.7. Available Length of Material

Design consideration for splice location depends in part on the length of plate that is available. No single maximum length is supplied for all plate sizes. The maximum plate length depends on a couple of factors:

- Weight of the material—the thicker the material, the shorter the maximum available plate lengths.
- Material type—Fracture-critical materials may have special length limitations depending on the procedures and equipment used by the mill. For example, steel that must be normalized must be short enough to fit inside a furnace.

Consult a fabricator or steel mill on typical length limits. These limits vary from mill to mill and with material type and thickness.

2.2. Plate Girders

TxDOT standard drawing SGMD, “Steel Girder Miscellaneous Details,” provides common details for use with typical plate girder spans.

When material transitions are considered, weigh labor and welding costs against potential material savings. When these costs are high, minimize the number of splices. Allow fabricators the flexibility to adjust the number and location of splices with designer approval. Designers should include a note in design details stating that adjustment to the number and location of transitions may be allowed with designer approval.

2.2.1. Flange Width

For curved girders, flange width should be no less than 25 percent of the web depth. For straight girders, a flange width of about one-fifth of the web depth should be sufficient. Do not use flanges less than 15 inches wide to permit installation of partial depth precast concrete deck panels (PCP's) on straight girders . The extra width for curved girders enhances handling stability and helps keep lateral bending stresses within reason. TxDOT research project 0-5574, *Curved Plate Girder Design for Safe and Economical Construction*, provides recommendations that result in better efficiency of the steel section, while maintaining stability during construction.

Maintain a constant flange width for each girder field section. Girders adjacent to each other should have the same flange width dimension to simplify slab formwork and to prevent variation in diaphragm or cross-frame geometry at interior bearings.

Flange width transitions are permissible only at field splices. All girders should have the same width transition at the same field splice location.

Width increments should be in whole inches.

If panel forming is allowed, which is recommended for straight girders, the designer is responsible for ensuring that the required studs can be placed on the girder without interfering with the panels.

Flange width affects girder stability during handling, erection, and deck placement. Keep the girder length (field section length) to flange width ratio below 85.

In most cases, top and bottom flanges should be the same width. Girders in positive bending that are composite with a slab can have a top flange narrower than the bottom flange, but assess weight savings against reduced lateral stability before hardening of the deck.

2.2.2. Flange Thickness

Flange thickness must satisfy AASHTO b/t requirements. AASHTO requirements for compression flange b/t ratios are more stringent than for tension flanges. Remember that flanges in tension under dead load can experience compression with certain live load positions or with construction sequencing.

Use a 10-foot minimum length for any given flange thickness on a girder. This is more a practical preference than a design consideration.

Use only a few flange sizes, and do not use a small quantity of one flange size. An economical girder will have as many as four or six flange sizes on a continuous girder and as many as two or three sizes for a simple span. On jobs with multiple structures, designers should communicate with each other and establish a preliminary list of no more than eight flange plate thicknesses to use. Refine the list as the designs progress if beneficial.

A flange splice can probably be economically introduced, if the savings is around 800 to 1000 pounds. These numbers are approximate and are a function of the current cost of steel plate.

2.2.2.1. Minimum Flange Thickness

TxDOT prefers a minimum flange thickness of 1 inch for curved girders. For straight girders, the flange thickness may be reduced to ¾ inch. Thinner plates will “cup” excessively when welded to the web.

2.2.2.2. Maximum Flange Thickness

TxDOT prefers a maximum flange thickness of 3 inches. Grade 50 and HPS 70W steels are not available in thicknesses greater than 4 inches. Weld time increases disproportionately when splicing plates thicker than 3 inches. Also, most fabricators are not certified to use electroslag welding, which saves a considerable amount of fabrication time, for plates greater than 3 inches.

2.2.2.3. Flange Thickness Increments

TxDOT prefers flange thickness increments of 1/4 inch from 1 to 3 inches, and 1/2 inch from 3 to 4 inches. Fabricators prefer no plate thickness changes that are relatively small—for example, from 1 to 1.125 inches. Generally, the thicker plate should provide at least 25 percent more area than the thinner plate. In addition, the thinner flange should be no less than half the thickness of the adjacent thicker flange.

2.2.2.4. Fatigue Resistance

If nominal fatigue resistance is not satisfied at Category C and C ' details, increase the flange thickness to eliminate the problem. The extra weight of a slightly thicker flange is less expensive than bolted stiffener tabs. Category C (stud connectors) and C ' (toe of stiffeners) are typically the controlling fatigue details for plate girders. Avoid details more critical than these Categories.

2.2.2.5. Lateral Bracing

Although some curved structures may require lateral bracing, only use where absolutely necessary. If possible, it is better to increase the flange thickness. Lateral bracing creates fatigue-sensitive details, is costly to fabricate, and difficult to install.

2.2.2.6. Curved Flanges

For curved girders, it is more economical for some fabricators to heat-curve the girders than to cut the flanges from a wide plate, producing waste. For other fabricators, the cost of the waste can be less than the time and labor to heat-curve. Designs should allow heat-curving (see S2.1 2016, Steel Bridge Fabrication Guide Specification, AASHTO/NSBA Steel Bridge Collaboration) in accordance with 11.4.12.2.2 of the AASHTO Bridge Construction Specification. Let fabricators decide the most economical way to produce curved flanges.

2.2.2.7. Slabbing and Stripping

"Slabbing and stripping" refers to a process in which wide plates of different thickness are welded to each other and individual flanges are then cut from this assembly. Because plates typically come in 42-inch or 48-inch minimum widths, this process reduces the number of individual flange splices required. It also reduces flange plate handling costs in the shop. The fabricator may not elect to slab the flanges, and it is not always feasible with curved girders. However, straight girder designs should allow the possibility of slabbing and stripping.

2.2.3. Flange Splice Locations

Locate splices at least 6 inches away from a web splice or transverse stiffener in order to facilitate non-destructive testing of welds.

Splices should be at least 10 feet apart.

Change flange width only at field splices, which are also good locations to change flange thickness.

2.2.4. Web Depth

The recommendations in *AASHTO LRFD Bridge Design Specifications*, Article 2.5.2.6.3, provide a good estimate of a minimum web depth for straight girders. Consider this depth a starting point. If vertical clearance is not a problem, adding depth can result in lighter girders. For curved girder web depth, use either the AASHTO recommended minimum depth for straight girders, increased by 10 to 20 percent, or use LRFD Equation 2.5.2.6.3-1 as a starting point. Aesthetics also has a role in girder depth. A rule of thumb for a well-proportioned superstructure is to have total section depth (slab plus girder) in the range of 0.033L to 0.04L (L = c–c brg length).

Use web depths in whole-inch increments.

2.2.4.1. Dapped Webs

Web dapping can add significant fabrication costs, so consider alternatives to dapping before specifying dapped girders. At girder ends, dap webs such that total superstructure depth, including bearings, closely matches that of an adjacent span if the difference in depth is much more than 1.5 feet. This is done primarily for aesthetic reasons and to

minimize tall reinforced concrete pedestals for bearings on substructure elements. Dapping girder ends can also be done at abutments to keep backwall heights within reason. Show the web dap to the nearest whole inch. No more than 40 percent of the web depth should be dapped.

Dap girder ends by cutting the web at a slope (1:1 minimum, 4:1 maximum) and allowing for cold bending of the flange to fit the web. Although AWS D1.5, Article 12.12, prohibits cold bending of fracture critical members, neglect this AWS provision because the stress range is very low near the support (dap location). Make a provision for an allowable shop splice in the flange immediately beyond the bends so that the fabricator does not have to work with a long piece of flange during bending operations. The slope should begin a sufficient distance away from the face of the substructure (6 inches minimum, taking substructure skew into account) so that the girder will not hit the substructure when it expands and so that erectors will have some latitude in moving the girder longitudinally. Refer to the TxDOT standard drawing SGMD, “Miscellaneous Details Steel Girders and Beam,” for more information.

2.2.5. Web Thickness

Minimum web thickness is 1/2 inch. Thinner plate is subject to excessive distortion from welding.

For web depths up to 96 inches, provide sufficient thickness to preclude the need for longitudinal stiffeners. Longitudinal stiffeners do not provide economical designs and present fabrication and fatigue problems that make their use in a design unwise. They may be justifiable in deep girders, but most structures built for TxDOT can be easily designed without them.

Web thickness should also be sufficient to eliminate the need for transverse stiffeners either entirely or partially. In high shear regions if transverse stiffeners spaced at about 8 to 10 feet prevent the need for a thicker web, the use of a stiffened web can be justified. Consider diaphragm or cross-frame connection plates as transverse stiffeners if they are needed in order to obtain a higher shear capacity, provided their spacing does not exceed AASHTO requirements. TxDOT discourages the use of fully stiffened web designs.

Optimum designs have few sizes, similar to flanges. A reasonable target would be three or fewer sizes for a continuous girder and one or two for a simple span.

Web thickness increments should be 1/16 inch up to a plate thickness of 1 inch. Use 1/8-inch increments beyond this.

2.2.6. Web Splice Locations

Splices should be at least 10 feet apart.

Locate web shop splices at least 6 inches away from a flange splice or transverse stiffener in order to facilitate non-destructive testing of welds.

2.2.7. Web-to-Flange Welding

Design web-to-flange welds and show them in the span detail drawings on the girder elevation. In most cases, the American Welding Society (AWS) minimum size weld (5/16 inch; see AASHTO/AWS D1.5) is sufficient. Welds more than 3/8 inch require multiple passes and drive fabrication costs up significantly.

2.2.8. Stiffeners

Plates provided only as a means to connect diaphragms or cross-frames to girders are included as stiffeners even though they are not typically considered stiffeners.

TxDOT standard drawing SGMD shows stiffener lengths and how the stiffeners are welded to the girders. If a design requires welds larger than AWS minimums, indicate this on the span detail drawings. The SGMD standard drawing also provides direction to the fabricator on the orientation of the stiffeners—for example, plumb or perpendicular to the girder. Corner clips are also detailed on the SGMD standard drawing.

Fabricators strongly discourage full-penetration welding of bearing stiffeners to flanges. Full-penetration welds distort the bearing area of the bottom flange. Use finish to bear at the bottom flange and tight fit at the top. If a diaphragm or cross-frame is attached to the bearing stiffener, use fillet welds to connect the stiffener to both flanges as shown on the SGMD standard drawing.

2.2.8.1. Width

Bars are more economical than plates for stiffeners. Bar widths come in 1/4-inch increments for widths under 5 inches and in 1/2-inch increments for widths of 5 to 8 inches. To take advantage of bar use, specify stiffener widths in 1/2-inch increments. Specify thickness in 1/8-inch increments using 3/8-inch as an absolute minimum.

The stiffener’s width should be sufficient to provide clearance for field welding of diaphragm and cross-frame members to the stiffener, particularly when field welding is required near the face of the web. Welders recommend 4 inches or more of clearance between the web face and vertical welds on a gusset plate/diaphragm member. Welders recommend three inches or more of clearance between a gusset plate/diaphragm member and a flange. The SGMD standard drawing specifies minimum stiffener widths, which are based on these recommendations. (See Figure 2-1.)

Bearing stiffeners should extend to about 1/2- to 3/4- inch from the flange edge. They should be wide enough to facilitate field welding of diaphragm members as shown in Figure 2-1.

Stiffeners can extend beyond the flanges if they do not interfere with slab forms and bearing anchor bolts and lateral guides.

If a diaphragm or cross-frame is not connected to the stiffener, use the minimum size stiffener allowed by AASHTO.

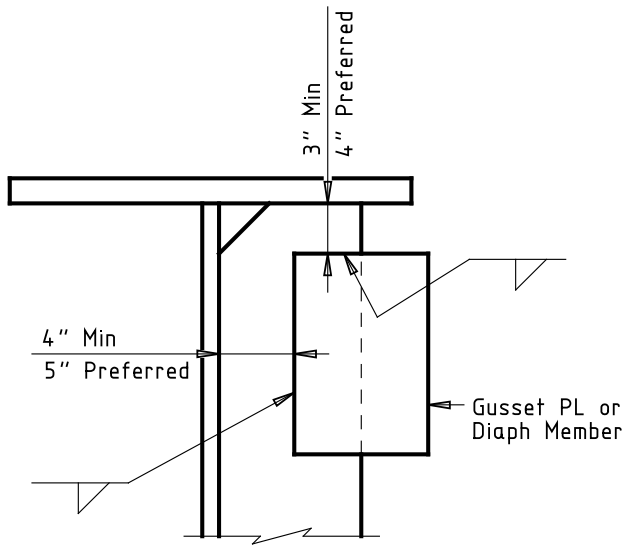

Figure 2-1. Recommended Clearances for Field Welding

2.2.8.2. Thickness

Use few stiffener sizes for a girder. For example, if the design requires minimum bearing stiffener thicknesses of 1 inch, 1.25 inches, and 1.5 inches, use 1.5-inch stiffeners at all locations. Use a bearing stiffener thickness that matches a flange thickness.

Size intermediate bearing stiffener thickness according to AASHTO requirements, and round up to the nearest 1/4 in.

Bearing stiffeners should be thick enough to preclude the need for multiple bearing stiffeners at any given bearing. Multiple stiffeners present fabrication difficulties and usually are not needed.

2.2.9. Bearings

For most plate girder spans, select bearings from TxDOT standard drawing SGEB, “Elastomeric Bearing Details Steel Girders and Beams,” or use a modified version of a bearing on this drawing. Avoid costly proprietary High Load Multi-Rotational (HLMR) bearings (disc, pot, and spherical bearings). Always provide enough cap width, length, and depth to accommodate bearings and their anchor bolts.

On skewed structures, ensure that sole plates do not conflict with abutment backwalls, inverted-T stems, or beams in an adjacent span.

2.2.10. Field Splices

Show field splices in the design detail drawings as bolted splices, unless they are not desired for aesthetic reasons or if splice plates interfere with diaphragm or cross-frame locations. In the design details, note that structural steel pay weight is based on bolted field splices and include the weight of the splice plates in the structural steel pay weight.

If a welded field splice is used, no design of the splice is typically required other than locating the splice and ensuring that nominal fatigue resistance is satisfactory. Item 448, “Structural Field Welding,” in the 2014 TxDOT Standard Specifications provides fabricators and erectors the necessary details of welded field splices.

See Section 2.7, “Bolted Connections,” for more information related to bolted field splices.

Locate field splices at points of dead load contraflexure. They do not have to be at the exact contraflexure point but should be reasonably close. Field splices do not have to be present at every contraflexure point. If the spans are short enough, it might be possible to skip a contraflexure point without violating length limitations.

Locate splices far enough away from diaphragms or transverse stiffeners to allow room for splice plates.

2.2.10.1. Girder Field Lengths

Make girder field lengths a maximum of 140 feet and maximum weight at 135,000 lbs, keeping in mind site access and the stability criteria in Section 2.2.1. Provide optional field splices in the design if girder field length is longer than 140 feet. Keep the stresses in the girder at an optional splice as low as possible. A flange splice is not a good location for an optional splice because the stresses in the thinner flange, by design, are usually close to the maximum permitted.

2.2.10.2. Girder Sweep

For curved girders, do not let the girder sweep plus the flange width exceed 6 feet for ease of shipping. The current legal vehicle width is 8 feet 6 inches without a permit. Limiting the overall shipping width of curved girders to 6 feet permits fabricators to offset the girder on the trailer, as is frequently done, while not exceeding an overall width of 8 feet 6 inches. Add optional field splices if required, as noted above.

2.2.10.3. Prestressed Concrete Panels

For straight girders, pay close attention to the interaction between the panel bedding strips and top flange splice plates and bolts where prestressed concrete panels may be allowed as a slab-forming option. Additional slab haunch may be required to accommodate bolt head height.

2.2.10.4. Girder Height

The legal vehicle height limit is 14 feet. Most trailers are approximately 4 feet high. Assume approximately 6 inches for dunnage. Overall girder depth should not exceed 10 feet for ease of shipping.

2.2.10.5. Fill Plates

Optional bolted field splices often require fill plates in flange splices. The steel grade specified for the girders is frequently not available in thicknesses of 3/8 inch or less. If flange fill plates that are less than 3/8 inch thick are needed, allow optional fill plate material (A 606, A 570, etc.) that meets design requirements. If the bridge is in a corrosive environment, investigate the use of stainless steel fill plates.

2.2.10.6. Material

Do not bring HPS 70W steel into a field splice unless stress demands require it. At low stress regions, where splices should be located, AASHTO's minimum splice strength requirement forces a greater number of bolts and larger splice plates than would otherwise be required.

2.3. Rolled Beam Sections

TxDOT standard drawing SGMD, "Steel Girder Miscellaneous Details," provides common details for use with rolled (wide-flange) beam spans.

Rolled beams can be more economical than plate girders for their applicable span lengths because of decreased fabrication costs.

2.3.1. Sections

Select beams that have a top flange that is sufficiently wide to provide adequate spacing for three stud connectors per row. If prestressed concrete panels are allowed as a forming option, the flanges should be at least 12 inches wide. The designer is responsible for ensuring that the required stud connector spacing does not create a conflict with prestressed concrete panels if panels are allowed as an option.

Satisfy flange proportion limits in the *AASHTO LRFD Bridge Design Specifications*, and ensure that flange width is sufficient for handling and erection stability (see Section 2.2.1).

For continuous spans, if changing weights at splices, beams must be from the same rolling family as given in American Institute of Steel Construction (AISC).

The beams should be large enough that the elastic neutral axis of the composite section is within the steel beam, not within the slab or haunch.

Do not use cover plates. Their fatigue category is too low.

Do not use sections smaller than W21, which would require modifications to the SGMD standard drawing.

2.3.2. Stiffeners

Rolled beams usually do not need bearing stiffeners. Verify this using the provisions in AASHTO LRFD Article D6.5.

2.3.3. Bearings

Select bearings from TxDOT standard drawing SGEB, or use a modified version of these bearings. For simple spans with rolled beams, bearing designs depicted on TxDOT standard drawing SBEB are more economical designs. These bearings were designed for TxDOT's standard steel beam spans only, but they may work for custom-designed bridges if analyzed for adequacy.

If calculated uplift is present at ends of continuous units, an uplift restraint satisfying the strength and fatigue limit states is required. The possibility of uplift during slab placement must be investigated and accommodated if present.

Do not use a continuous beam that has calculated uplift at end bearings with the Service I load combination under any circumstances.

2.3.4. Field Splices

The information in Section 2.2.10 applies.

2.3.5. Camber

Camber rolled beams for dead load deflection and profile for all continuous beams and for simple spans over about 50 feet. Camber continuous beams for total DL deflection and roadway vertical curves. Camber simple spans for total DL deflection only. For rolled beams, specify the welded plate girder camber tolerances in AWS D1.5 in the design detail drawings. Consult fabricators to determine whether the required camber can be achieved with the proposed beam section.

For detailing requiring camber, show only the mid-ordinate of simple-span beams in the design details. For simple span beams less than about 50 feet, note in the design details to erect beams with natural camber up.

2.4. Tub Girder Sections

There are no standard TxDOT details for tub girders at present. Most of the guidelines outlined are for curved, continuous tub girder units. Application of these guidelines to tangent and simple span construction is at the designer's discretion. Additional suggestions are available in the National Steel Bridge Alliance publication, "Practical Steel Tub Girder Design" (see http://docs.trb.org/prp/06-2543.pdf).

Tub girders should have a constant trapezoidal or rectangular shape and should be rotated with the cross slope. Keep the top-of-slab to top-of-web dimension constant. See Figure 2-2 for preferred horizontal geometry. Departure from the shown geometry can

result in extreme difficulties generating shop drawings. The profile grade line and horizontal control line locations in Figure 2-2 are for example purposes only.

Take the centerline-of-bearing offset into account when substructure elements are detailed.

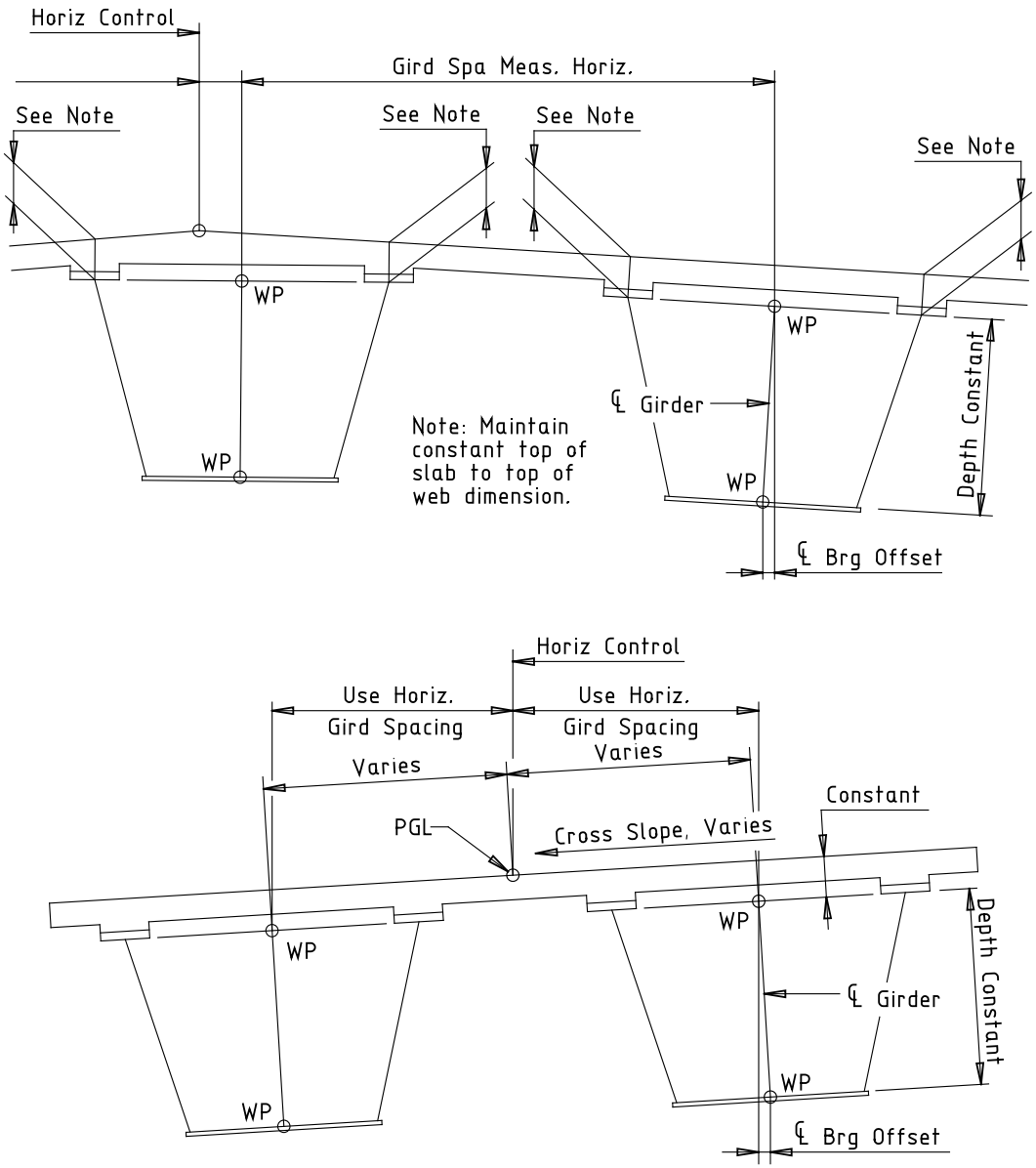

Figure 2-2. Recommended Tub Girder Horizontal Control

2.4.1. Flanges

In addition to AASHTO requirements, top flanges for tub girders should follow the suggestions for plate girder flanges in Section 2.2.

For bottom flanges, plate distortion during fabrication and erection can be a problem. Check with fabricators when using bottom tension flange plates less than 1 inch thick to determine whether practical stiffness needs are met. Bottom tension flanges should never be less than 3/4 inch thick. In addition, the bottom tension flanges should have a w/t ratio of 80 or less.

At present, no information is available regarding the possible economic benefits of using a thinner, longitudinally stiffened compression flange over a thicker, unstiffened flange. Until such information is available, discuss options with fabricators who are experienced with tub girders.

If using longitudinal stiffeners, try to maintain a clear distance between longitudinal stiffeners of no less than 24 inches (more is better) to accommodate automated welding equipment. Therefore, the minimum flange width, between webs, is 48 inches when using one stiffener and 72 inches for two stiffeners. Do not use more than two stiffeners per flange.

For straight girders, plates or bars are recommended over WT shapes for longitudinal stiffeners as long as they meet AASHTO criteria. Plate and bar sections are less expensive and easier to splice than WT sections. For curved girders, WT sections are recommended. If WT sections are used, the suggested ratio of the depth to one-half the WT flange width should be greater than 1.5 to provide good welding access. Try to allow termination of longitudinal stiffeners at a bolted field splice such that fatigue is not a concern at the stiffener's end.

Bottom tension flanges of two-girder spans are classified as fracture-critical unless designed for system redundancy according to the FHWA June 2014 Memo (*Clarification of Requirements for Fracture Critical Members)*, designated as System Redundant Members (SRM) on the plan sheets, and submitted to TxDOT Bridge Division for acceptance. The tension portion of each web plate attached to a fracture-critical flange plate is fracture-critical itself unless designed for system redundancy according to the FHWA June 2014 Memo (*Clarification of Requirements for Fracture Critical Members)*, designated as System Redundant Members (SRM) on the plan sheets, and submitted to TxDOT Bridge Division for acceptance Top tension flanges are not fracture-critical unless only one girder per span is used.. Avoid details more critical than Category C with fracture critical members (and for non-fracture-critical members as well).

Bottom flange edges should extend at least 2 inches beyond the web centerline to facilitate automated welding.

2.4.2. Webs

The suggestions in Sections 2.2.4 and 2.2.5 apply, except consult a fabricator when dapping a tub girder with a greater than 15° skew

2.4.3. Stiffeners

For stiffeners and connection plates for internal cross-frames, a good option to provide fabricators is shown in Figure 2-3. Cutting the stiffeners short of the bottom flange facilitates automated welding of the web to the bottom flange. After this welding is complete, the stiffener can then be attached to the bottom flange with an additional plate.

Refer to Section 2.11, Bearing Replacement, for information on stiffeners to be used for future bearing replacement.

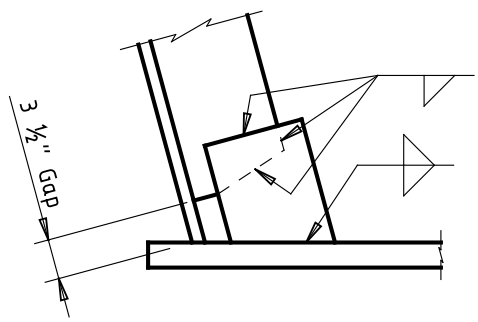

Figure 2-3. Recommended Tub Girder Stiffener Option

Do not specify complete penetration groove welds to connect bearing stiffeners to bottom flanges. Weld-induced flange distortion is even more of a problem with tub girder flanges than with plate girders.

2.4.4. Top Flange Lateral Bracing

Use lateral bracing in straight tub girders and in curved tub girders.

Bolt lateral bracing directly to the top flange. Provide enough slab haunch that formwork does not interfere with the bracing. Do not use shims or fills between the lateral bracing and top girder flange that increase eccentricity of the connection.

TxDOT prefers single-laced lateral bracing over double-laced bracing. The angle between the girder flange and bracing should be at least 35 degrees. An angle closer to 45 degrees is ideal.

Consider erection loads and sequential concrete placement when determining the worst-case loading for lateral bracing.

2.4.5. External Diaphragms and Cross-Frames (between Piers)

External diaphragms or cross-frames are normally used to control relative displacement and twist of girders during slab placement. Once the slab has matured sufficiently, they may be removed, which is done primarily for aesthetic reasons. If they are to remain in place, they should complement the overall structural aesthetics and should contain fatigue-resistant details.

For curved tub girders, external diaphragms or cross-frames at span quarter or third points are usually sufficient; adding more is unnecessary. With straight tub girders, one external cross-frame or diaphragm at mid-span should be sufficient. External diaphragms or cross-frames must be backed up with an internal diaphragm or cross-frame.

2.4.6. Internal Diaphragms and Cross-Frames (between Piers)

Internal diaphragms and cross-frames are used to control cross-section distortion. For curved tub girders, locate an internal cross-frame or diaphragm at every other lateral bracing point, which should result in a spacing of 14 to 18 feet. Place horizontal struts, usually angle sections, at the lateral brace point between internal cross-frames to control horizontal bending of the flange during concrete placement. Like lateral bracing, they should be attached directly to the flanges.

For straight tub girders, internal cross-frame or diaphragms can be spaced every third or fourth lateral bracing point.

2.4.7. Pier Diaphragms and Cross-Frames

Assuming one bearing per girder, diaphragms at bents should be plate girder sections that are approximately the same depth as the girders themselves, and they should connect to the tub girder's flanges and webs if their span-to-depth ratio is 3 or more. With two bearings per girder, a cross-frame may be a better choice at piers. Verify that bearing assemblies do not interfere at the bottom flange connection. Carefully consider constructibility of diaphragms at the girder ends as the presence of abutment backwalls, stems of inverted-T bents, or other girders can complicate bolting these diaphragms in place. Provide an inspector access hole through the diaphragm web plate at intermediate supports. See Section 2.5.3 for recommended opening sizes. See Figure 2-4 for a sketch of a typical pier diaphragm between girders (with one bearing per girder).

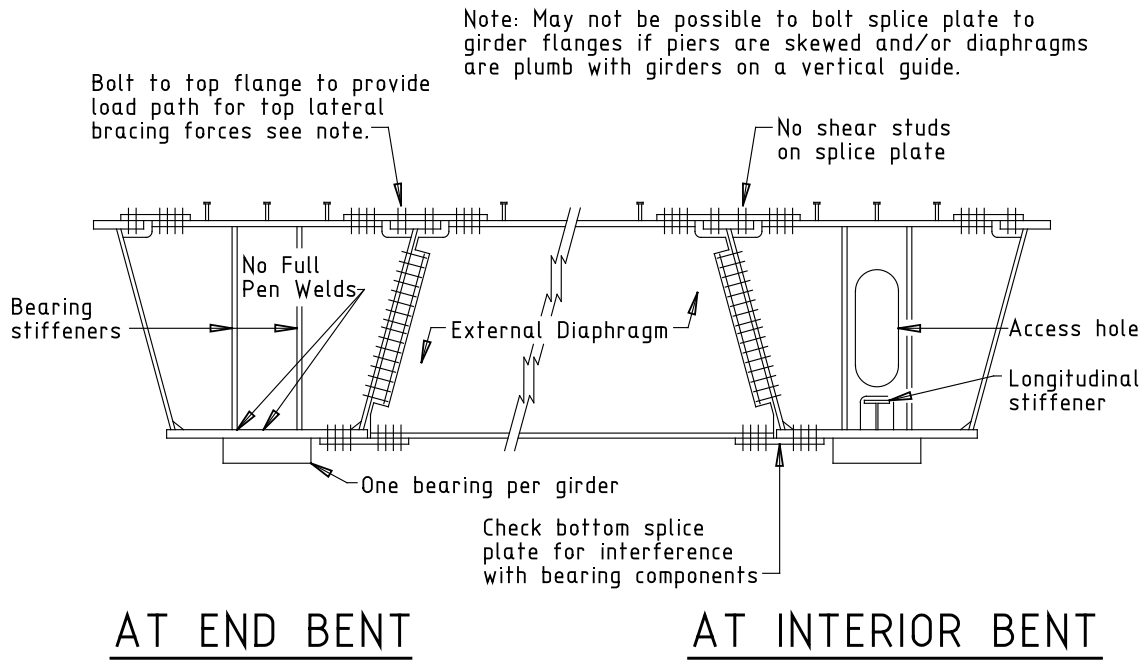

Figure 2-4. Moment-Connected Pier Diaphragm

2.4.8. Field Splices

Bolt field splices. The suggestions in Section 2.2.10 apply. In addition, overall girder width, including sweep, should be no more than 14 feet for ease of shipping.

2.4.9. Bearings

TxDOT prefers one bearing per girder at each support. A girder may not bear evenly on both bearings or, at worst, on only one of the bearings with two bearings per support. This is especially true with skewed piers.

High Load Multi-Rotational (HLMR) bearings may be necessary. TxDOT prefers neoprene bearings over HLMR bearings. HLMR bearings are good only with very large reactions, more than 1,200 kips.

TxDOT prefers bearing designs without anchor bolts (except anchor bolts through masonry plates only). Do not require anchor bolts to pass through the girder flange. A better method of detailing for restraint is to design an external alignment device that is flexible in terms of placement after girder erection.

Bearing designs should accommodate bearing replacement with a minimal amount of lifting.

2.4.10. Electrical Service and Inspection Access

Design details should provide for electrical service on the inside of the girders, with outlets spaced at no more than 100 feet to facilitate maintenance and inspection during the life of the bridge. The long girder length between access holes or doors necessitates this provision.

Provide an access hole with lockable door or cover in the bottom flange near each end support for inspector access. The door or cover must be light enough to be easily managed by an inspector (suggested weight is 25 pounds or less).

2.5. Box Girder Sections (Closed Boxes for Straddle Bents)

Straddle bents are sometimes employed when there is limited vertical clearance between a bent and lower roadway. Steel box girders are a good solution in these situations.

Longitudinal beams/girders should be supported on top of the straddle bent, but they may be supported on the sides of the bent if necessary to satisfy vertical clearance requirements. TxDOT standard drawing MEBR(S), “Minimum Erection and Bracing Requirements (Steel I-Beams and Plate Girders),” does not apply to straddle bents, and the designer should address beam/girder bracing requirements through special details or notes.

Provide two inspector access doors or hatches in all box girders. Typically, a hatch-type, lockable door at each end of the box is sufficient. It is important to provide access holes at each end of the box.

Boxes can be designed to be completely sealed (preferred) or to be well drained. Coordinate all aspects of box design toward one or the other of these designs. For example, a design that calls for a sealed door should not have drain holes or corner clips on outside plates. Remember that small openings into the box occur at bolted field splices if a sealed box design is being considered. Keep any openings as small as possible or install screens to keep birds and bats out of the boxes as they can plug the drains.

Recommendations for plate girders generally apply to straddle bent box girders.

2.5.1. Flanges

Tension flanges for straddle bents are fracture-critical.

Extend flanges past the outside edge of each web a minimum of 2 inches to allow for automated welding equipment.

Flange width depends somewhat on the need for enough room inside the box girder to allow passage of inspection personnel. If fabrication is required within the box, provide at least 48 inches between webs.

See Section 2.2.1 for more details.

2.5.2. Webs

When estimating web depth for a straddle bent, use the span length divided by 12 (L/12) to obtain a reasonable starting point for design.

The tension half of each web plate is fracture-critical, so take care to avoid weld details on the web that are more critical than Category C '. Also, if a detail welded to a fracture-critical member is long enough, it becomes fracture-critical itself (see AWS D1.5, Section 12.2).

2.5.3. Stiffeners

Stiffeners, both intermediate and bearing, should consist of plates sized to match the box's interior dimension with an opening that is sufficiently large to permit fabrication and inspection functions within the box. The absolute minimum opening size is 18 inches wide by 30 inches deep. If possible, provide openings that are at least 32 inches wide by 36 inches deep. Place the holes at mid-depth and concentric with the box. The opening corners should have a radius equal to one half of the opening width.

If multiple bearing stiffeners are required at a bearing, space them far enough apart to provide adequate welding access. Although not always possible, stiffeners should be spaced 36 inches apart to facilitate welder access.

Stiffeners should be welded to all four inside box surfaces. Avoid a tight fit condition without a weld because it can create an unstiffened web gap from which fatigue cracks can propagate. Avoid complete penetration groove welding because of weld-induced distortion that invariably occurs in the flanges.

See Figure 2-5 for a sketch of a typical box girder stiffener

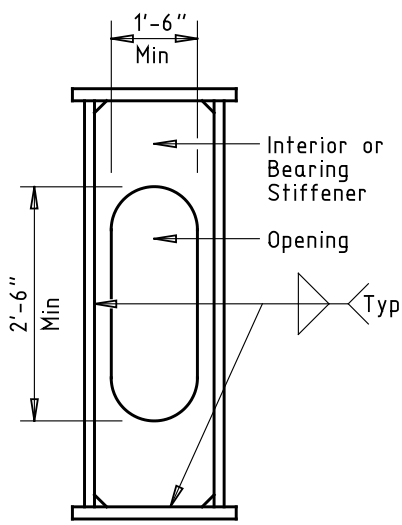

Figure 2-5. Recommended Box Girder Stiffener Detail

2.5.4. Bearings

A preformed fabric pad is the type of bearing most often employed with straddle bents. Base pad thickness primarily on rotational capacity requirements set forth in the *AASHTO LRFD Bridge Design Specifications*. Reinforced neoprene bearings are a good alternative if rotation is difficult to satisfy with preformed fabric pads.

If the straddle bent is not level, use a sole plate, beveled to match the slope of the cap.

If feasible, use a bearing system that is forgiving of anchor bolt misplacement.

2.5.5. Field Splices

Field splices, if needed, should be bolted. See Sections 2.2.10 and 2.7 for more information related to bolted field splices.

2.5.6. Flange-to-Web Welding

For flange-to-web welds on box girders, designers should provide options. These may include the following:

- Double fillet welds
- Double unbalanced fillet welds
- A full penetration weld
- A partial penetration weld with fillet backing

These options are shown in detail in Figure 2-6. Allowing these options provides flexibility to the fabricator, which helps to ensure the most economical product. The choice of joint detail for a box girder corner has a great effect on quality and economy. Access inside the boxes is generally limited, especially in smaller boxes, and it is usually best to minimize the amount of welding that must be accomplished from inside the box. Fillet welds are generally more economical than groove welds, so fillet welds are encouraged. Additionally, large welds can cause distortion problems during fabrication.

One flange can be welded to the webs with relative ease. The need for options becomes more pronounced for the remaining flange, sometimes referred to as the “lid.” Detail the tension flange to web welds as double fillet welds, and provide options for the compression flange. This assumes that the tension flange changes at a field splice or that the box is simply supported. If the tension flange changes sides without a field splice, the weld detail should remain constant per side.

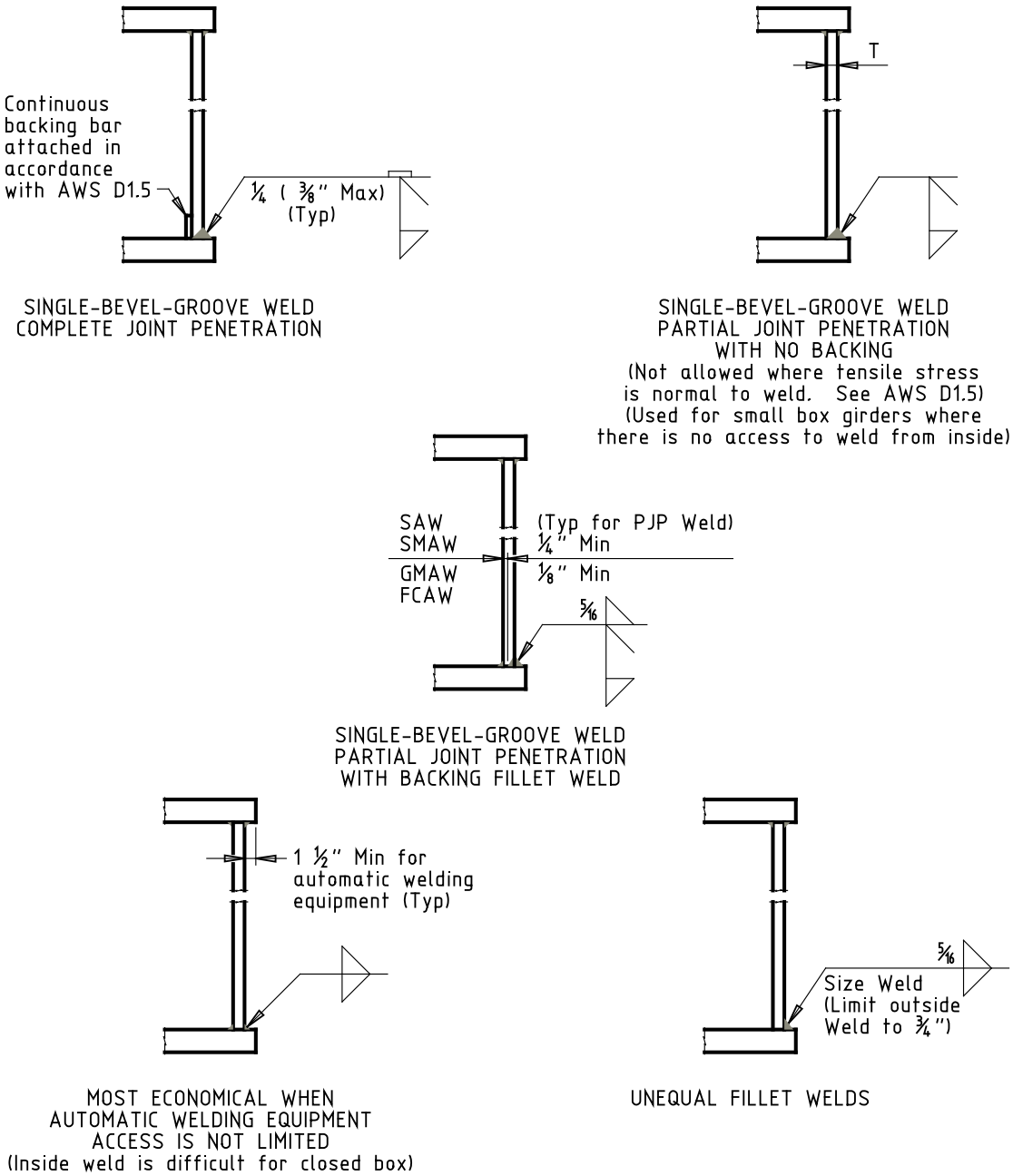

Figure 2-6. Recommended Box Girder T-Joint Weld Details

2.6. Diaphragms and Cross-Frames

TxDOT has traditionally used field welding as the preferred method of connecting diaphragms and cross-frames to girders because it is more forgiving with respect to

erection tolerances than bolted connections. For bolted connections, use standard size holes to control girder geometry.

The diaphragms and cross-frames shown on TxDOT standard drawing SGMD should be acceptable for the beam spacing and depth limits noted on those standards. However, because of the variability in steel bridges, always confirm the adequacy of these standard diaphragms and cross-frames, including their connections, before using them with any design details.

For straight beams and girders, observe the 25-foot spacing limit from the AASHTO *Standard Specifications* as a starting point. A larger spacing is acceptable if a larger spacing can be achieved without temporary bracing and if all other limit states are satisfied. A tighter-than-normal diaphragm/cross-frame spacing near interior supports may prove beneficial in terms of increasing negative moment bending capacity. This should be investigated for each straight continuous bridge design. For curved girders, TxDOT prefers that diaphragms or cross-frames be placed at 15 to 20 feet maximum to help limit lateral flange bending stresses and cross-frame/diaphragm member forces.

Consider bracing beyond what permanent diaphragms and cross-frames provide for erection and slab placement. In some cases fascia beams have twisted during slab placement, a problem that permanent diaphragms have not prevented.

2.6.1. Member Selection

Equal leg angles are often more cost-effective than unequal leg angles. Fabricators discourage back-to-back angles used as cross-frame members. Some common angle sizes for diaphragms are L3.5 x 3.5 x 3/8, L4 x 4 x 3/8, and L5 x 5 x 1/2.

Fabricators discourage the use of WT shapes, especially in small quantities. If channel sections are used, C shapes are preferable to MC shapes.

If a channel is used, provide an option for the fabricator to bend a plate into an equivalent channel shape instead. A bent-plate diaphragm, in the shape of a channel, is a possible option to provide to the fabricator for diaphragms on shallow plate girders (4-foot-deep web or less) or rolled beams.

It may be beneficial to use a larger shape than is required if the larger shape is being used in significant quantities elsewhere in the project.

Design and detail cross-frames such that they can be erected as a single unit. Fabricators and erectors discourage diaphragms that require erection in separate pieces.

Detail cross-frames such that all welding during fabrication can be done from one side to minimize handling costs.

2.6.2. Stage Construction and Skews

If the bridge is to be built in stages or if the skew is large, differential deflection between girders due to slab placement can be significant. Special diaphragm/cross-frame details may be required for these cases. An example is slotted holes for erection bolts and the requirement of field welding after slab placement if the designer has ensured that erection bolts alone can accommodate the loads. The designer should also provide custom dead load deflection values on the plans for the girder under a construction stage line.

TxDOT standard drawing SGMD covers skew angles up to 45 degrees. Anything beyond this requires special design details showing diaphragm/cross-frame attachment to the girders.

2.6.3. Diaphragm and Cross-Frame Orientation

Standard drawing SGMD indicates that diaphragm/cross-frame lines at end bearings are parallel to the skew up to a 20-degree skew. Between 20- and 45-degree skews, diaphragm/cross-frame lines at end bearings are not quite parallel to the centerline of bearing.

AASHTO permits interior diaphragm/cross-frame lines parallel to the skew up to 20-degree skews. When diaphragms/cross-frames are placed along the skew, the designer should be aware that Dart welders are commonly used industry-wide to attach the stiffeners to the girder webs. Dart welders can weld a stiffener plate that is skewed to the web up to 20 degrees, which works well with the AASHTO limitation. Beyond 20 degrees, fabricators will have to use a more costly welding method.

Placing all diaphragms/cross-frames along the skew is acceptable for skews up to 20 degrees. All other diaphragms/cross-frames should be normal to the girders. Curved girders are an exception and should always have radial diaphragm/cross-frame lines at intermediate locations.

A good, economical design minimizes the number of diaphragms/cross-frames with different geometry. Superelevation changes, vertical curves, different connection plate widths, and flaring girders all work against this goal.

2.7. Bolted Connections

One-inch and 7/8-inch diameter bolts should be the only sizes considered for bridges. One-inch bolts often provide the most economical design. However, for small rolled beam flanges, smaller bolts may be better due to net area requirements. Do not mix sizes within a splice or within a unit unless F3125 A490 bolts are used with F3125 A325 bolts. (See Section 2.7.2.)

Strength checks of erection bolts should be checked for curved bridges and bridges with unusual geometry.

Web and flange splice plates should be at least 1/2 inch thick.

Provide more edge distance for bolt holes than the AASHTO minimums. If the drill drifts during the drilling operation, the hole could violate minimum edge distances. Add 1/4 inch to the AASHTO minimums.

Do not specify the use of Tension Control Bolts (ASTM F1852). These bolts are often referred to as twist-off bolts. They have been specified by designers for the appearance of the bolt head, which resembles a rivet head. When offered as an option to contractors, they are selected for their installation ease. Tension control bolts use a special wrench that is calibrated to twist off the bolt end at or beyond the necessary pretension. This presents a problem because the bolt's thread lubrication must be uncompromised to work properly. Deterioration of thread lubrication is discovered from time to time and as a result, there is a lack of confidence in achieving the correct bolt pretension all of the time.

Use galvanized bolts on field connections of bridge members when ASTM F3125 Grade A325 bolts are specified and steel is painted. Keep in mind that galvanized A325 bolts should not be re-used. Refer to the 2014 TxDOT Standard Specifications for more information.

2.7.1. Slip Coefficient

The 2014 TxDOT Standard Specifications allow painted faying surfaces if the paint is documented to meet slip and creep requirements, so show the slip coefficient assumed in the design on the design detail drawings.

TxDOT recommends using Class A surface conditions (slip coefficient = 0.30) for design for the following reasons:

- It allows for surface deterioration before the splice is made.
- Slip might not control the design, and this information is not normally conveyed in the plans. If a 0.30 design slip coefficient is adequate, it permits more flexibility to fabricators in the coating types to be allowed on faying surfaces.

For unpainted weathering steel structures, faying surfaces must be blast cleaned and be free of any mill scale. Research attests that mill scale on weathering steel plate is more slippery than mill scale on non-weathering steel plate, and it is detrimental to the slip resistance of connections. The Standard Specifications call for an SSPC-SP 10 ("near-white") blast-cleaning to ensure that all mill scale is removed, but the near-white finish is not required to remain at the time of erection. See further discussion under Section 4.2.

2.7.2. F3125 Grade A325 vs. F3125 Grade A490 Bolts

For the following reasons, do not use A490 bolts unless absolutely necessary:

- TxDOT's bolt installation procedure (in TxDOT Standard Specification Item 447) specifies the use of fit-up bolts, which are used to bring all the plies into full contact. The erector is often able to release the crane from the member using these bolts to

support the joint as part of the erection procedure. Before the joint is complete, these fit-up bolts must be loosened. They can be retightened if A325 bolts are used but must be replaced if A490 bolts are used. Contractors strongly prefer loosening and retightening to replacement, and TxDOT inspection procedures cannot ensure that the A490 bolts will be replaced.

- A490 bolts are much more sensitive to tightening procedures. If over-tightened, these bolts can unload significantly below their proof load. A325 bolts have much more ductile behavior, so they can be tightened well beyond their proof load and still maintain the required tension.
- A490 bolts require impact wrenches of ample strength and quality that are sometimes not available at construction sites.

A325 bolts and A490 bolts of the same diameter are easily confused. If A490 bolts are necessary, use them in all similar connections or make them a different diameter than A325 bolts used for the bridge. But use common sense—for example, if A490 bolts are required for some lateral bracing connections, use the same size A490 bolts for all lateral bracing connections. Switching bolt grade/size at a common field splice location for adjacent girders would require re-calibration of the tightening equipment in the middle of the erection process, or require separate wrenches calibrated for each bolt grade/size. A good design is not a source of confusion and delay in the field.

2.8. Anchor Bolts and Rods

The most economical anchor bolt for bridges is a mild steel anchor bolt. Mild steel anchor bolts are usually sufficient. Alloy steel anchor bolts may not provide the best value in the long term because their superior engineering properties are not realized on typical bridges.

Anchor bolts should be hot-dip galvanized as specified in the TxDOT Standard Specifications. Do not be concerned about contact between galvanized bolts and weathering steel. The zinc coating resulting from the hot-dip process is thick and sacrifices itself at such a low rate that the service life of the bolt is not compromised.

Use fatigue detail Category E when evaluating anchor bolts of any material for fatigue. Use the bolt tensile area, not the nominal area, when evaluating anchor bolt fatigue.

Despite the best efforts of contractors, anchor bolts are occasionally placed in the wrong location. Any bearing detail incorporating anchor bolts or rods should be able to accommodate their misplacement.

2.9. Shear Connector Studs

Place shear connector studs over the entire length of the girder. Studs applied full length of the girders provide better distribution of deck cracks resulting from shrinkage. If studs are placed along the full length of girder, do not consider slab reinforcement as part of the

negative bending section. Tub girders require stud connectors the full length of the girder to ensure that the box section is “closed” along its entire length.

TxDOT standard drawing SGMD provides details for stud connectors. The designer must show their spacing on girder/beam elevations in the design details. AASHTO requires a minimum center-to-center stud spacing of four stud diameters transversely and six stud diameters longitudinally. Recent research sponsored by TxDOT indicates the longitudinal spacing could be lower as long as concrete consolidation can be achieved. Therefore, a longitudinal stud spacing of 4 inches is acceptable.

Stud connector spacing must be modified when allowing the use of prestressed concrete panels as a slab-forming option. To verify that panels will fit with the studs, assume a minimum clearance between panel edges and stud connectors of 5/8-inch, the minimum clearance used with prestressed concrete beam horizontal shear reinforcement.

Designers may present a stud connector spacing modification in the design details other than what is given on the SGMD standard drawing.

Shear connector studs should not be required on top of flange splice plates.

2.10. Design Details

Both web camber diagrams and total dead load deflections should present camber requirements for plate girders. Most fabricators use total dead load deflections in determining web camber. However, some fabricators may opt to use a web camber diagram.

Do not provide web camber diagrams for tub girders because they supply no useful information to the shop drawing detailer. Steel detailers require only total dead load deflections to determine tub girder camber.

Avoid the term “web-cutting diagram” in design details because webs are not actually cut to these diagrams. Rather, fabricators make the adjustments they predict are needed such that the final product will meet specification requirements. Instead use phrases such as “camber diagrams” or “camber in the unstressed condition.”

See the current TxDOT *Bridge Detailing Guide* for more information on requirements for detailing of steel structures.

2.11. Bearing Replacement

The potential need to raise a bridge at some point in its life always exists because of unforeseen circumstances, such as bearing deterioration or failure.

Bearing designs should accommodate bearing removal with minimal lifting (1/4-inch lift requirement is suggested).

Raising a bridge with jacks is typical during bearing replacement. Jacking points on girders should be underneath a stiffened web. On tub girders, where it would be extremely difficult to add stiffeners to the girder webs once the slab is in place, include stiffeners for jacking in the initial girder fabrication. If there is enough room on the bent cap and under the girder to accommodate the predicted jack size, place the stiffeners accordingly. If the bent cap is too narrow to accommodate the jacks or the clearance under the girder is too small, place the stiffeners approximately 1 foot beyond each face of the cap. In this situation, shoring towers will be required in conjunction with jacks to raise the bridge. Place stiffeners symmetrically about the girder and bearing centerline so that no torsion will be induced during lifting operations.

On conventional I girders where it would be relatively easy to add stiffeners at jack locations, do not include these stiffeners in the initial girder fabrication. If the bearings need to be replaced, the absence of stiffeners gives the contractor more latitude in determining the best jack locations.

2.12. Bent Locations for Replacement or Widening

If existing bents are used for replacement or widening, use field-verified bent locations to prepare the plans. Do not rely on existing plans because the actual bent location/skew may differ enough from those plans to create field fit-up problems.

3. Fabrication

3.1. Shop Drawings

3.1.1. Shop Drawing Review

The welding procedures do not need to be checked when reviewing shop drawings; however, the welding symbol must be checked.

When stamping drawings, a reviewer need not initial the drawings. The approval engineer is responsible for reviewing shop detail drawings for conformation with the design details and specifications only, and the contractor and fabricator are responsible for all dimensions and fit of the structure.

See AASHTO/NSBA Steel Bridge Collaboration G1.1, "Shop Detail Drawing Review/Approval Guidelines," for dimensions and material requirements that need to be checked and for other guidelines concerning shop drawing review.

3.1.2. Distribution of Approved Shop Drawings

The design office—which is the district design office, the Bridge Division, or a contracted design firm—handles distribution of approved shop drawings. Requirements for shop drawing submittals are outlined in a table titled "2014 Construction Specification Required Shop/Working Drawing Submittals," posted on the internet at ftp://ftp.dot.state.tx.us/pub/txdot-info/library/pubs/bus/bridge/electronic_submission.pdf. Additional information is available in the *Guide to Electronic Shop Drawing Submittal* and other information posted on the internet at ftp://ftp.dot.state.tx.us/pub/txdot-info/library/pubs/bus/bridge/e_submit_guide.pdf.

3.1.3. Shop Camber Checking

TxDOT inspectors check the actual camber condition during laydown. In accordance with the AWS D1.5 Bridge Welding Code, they check camber over the entire span, not just on the individual member.

3.2. Non-Destructive Testing

3.2.1. Use of Edge Blocks for Radiographs

When radiography testing is conducted at width transition splices, the location of the transition is moved 3 inches back from the splice to allow proper fit of the edge blocks. See Figure 3-1. This detail is shown on TxDOT standard drawing SGMD.

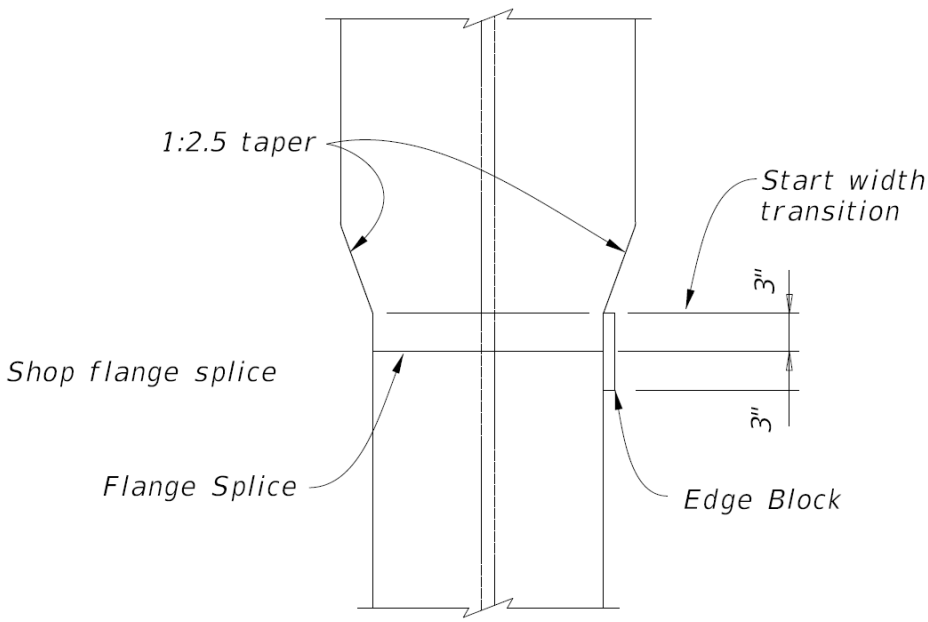

Figure 3-1. Flange Width Transition Detail

3.3. Cleaning and Painting

3.3.1. Painting Box and Tub Girder Interiors

The 2014 TxDOT Standard Specifications Sections 441.2.4.2 and 446.2 specify the type of paint (a white polyamide-cured epoxy) to be used on the interior of box girders.

Although paint on the inside of boxes provides some protection from corrosion, its primary purpose is to facilitate in-service inspections. The paint is intended to be "surface tolerant" so that it will adhere well to surfaces that have been cleaned free of grease, oil, and dust but that have not been blast-cleaned to near-white metal.

3.3.2. Painting of Faying Surfaces

According to the 2014 Standard Specifications, the faying surfaces must be painted with a prime coat after blast cleaning. Painting them provides some corrosion protection. However, if the splice components are thin enough, bolt tightening will pull the plates together so that there will be no moisture access. Painting the faying surfaces also helps protect them during the time between when they are prepared in the shop and when they are erected in the field. Ensure that the following criteria are met when painting faying surfaces:

- The coating has been evaluated for actual coefficient of friction values.
- The coating has been evaluated for creep.

- The conditions under which the evaluation took place were representative of conditions which the coating will actually be applied. If not, the manufacturer of the plant must be consulted regarding appropriate cure time.

The friction test and the creep test are described in the Research Council on Structural Connections (RCSC) *Specification for Structural Joints Using High-Strength Bolts*, which can be found in the AISC Manual of Steel Construction. Paint suppliers provide specific coefficient of friction values for each coating, and they certify that the coating meets AISC requirements.

If a steel structure with bolted connections will be painted, but the faying surfaces will not, a small amount of paint in the faying surfaces around the perimeter of the connection is not detrimental. Although it is very important to avoid even small amounts of overspray on the faying surfaces of the connection, paint may be applied on the faying surfaces to within one inch or one bolt diameter, whichever is greater, of the perimeter holes (see Figure 3-2). This allows flexibility in fabrication because the painter may mask inside the edge of the connection instead of trying to mask precisely where the edge of the connection is expected to be. This also provides better protection because carrying the prime coat slightly under the splice plate minimizes the discontinuity in the primer that naturally occurs between splice plates and main members.

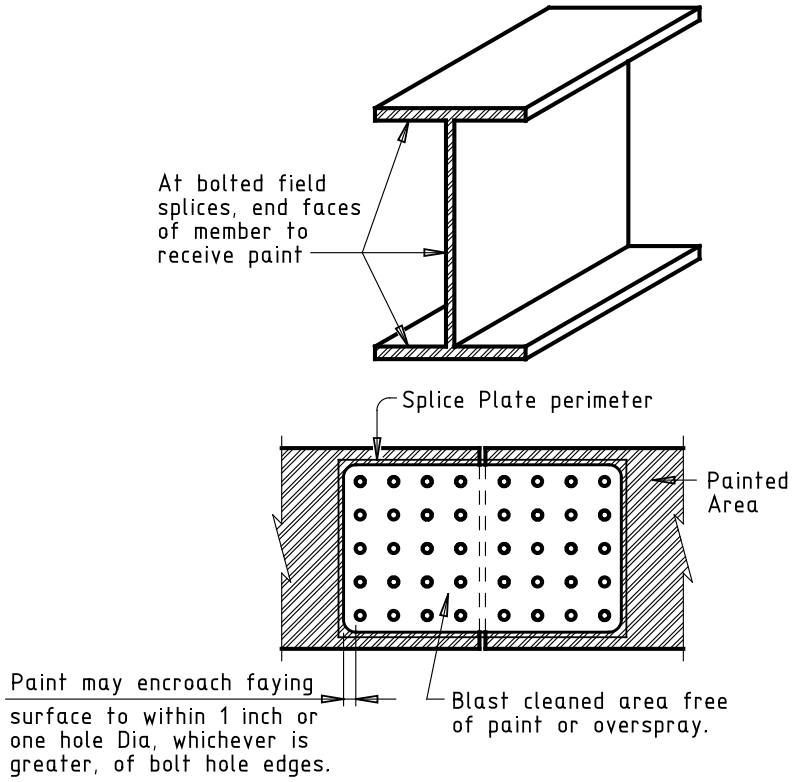

Figure 3-2. Paint Masking Requirements for Bolted Splices

4. Erection/Construction

4.1. Shipment of Bolts

Bolts for steel bridge structures are usually installed in the field although occasionally some are installed in the shop. When bolts will be installed in the field, they should be shipped directly to the field in containers that prevent exposure to the elements and maintain the integrity of the fasteners. All fasteners must be tightened in accordance with specification requirements for tightening. Diaphragm or cross-frame erection bolts, shown on TxDOT standard drawings SGMD and SBMD, are an exception to this rule and need only to be snug tight because they are used only as pins to align the diaphragms/cross-frames prior to field welding the final connections.

The actual fasteners to be used on the job should never be shipped installed in the members unless they are completely tightened. This is important for two reasons:

- When fasteners are shipped to the field partially tightened, they are exposed for indefinite lengths of time, compromising the lubricant condition of the threads and washers.
- When fasteners are shipped to the field partially tightened (for example, snug-tight), it is not possible to know just how tight they are. This makes it impossible to tighten the fasteners properly.

4.2. Condition of Weathering Steel Bolted Splice Faying Surfaces

The Standard Specifications call for an SSPC-SP 10 (“near-white”) blast-cleaning to ensure that all mill scale is removed, but the near-white finish is not required to remain at the time of erection. In fact, research has shown that some amount of tightly adhering rust can enhance the slip resistance of a connection, and an SSPC-SP 6 finish is sufficient. Unless the girder has been exposed to particularly corrosive conditions during storage, pressure-washing the faying surfaces at the jobsite shortly before erection will remove any loose material detrimental to the connection.

A. TxDOT Painting Practices

A.1. Steel Painting Construction Specifications

The primary construction specification for steel bridge painting is Item 446, "Field Cleaning and Painting Steel." The construction specification governing the shop painting of new steel is DMS-8104, "Paint, Shop Application for Steel Bridge Members." DMS-8104 is referenced in Item 441, "Steel Structures."

A.2. Material Specifications for Steel Coatings

The material specifications for TxDOT steel coatings are found in the 8000 series of the DMS and are the following:

- DMS-8100, "Structural Steel Paint – Formula,"
- DMS-8101, "Structural Steel Paints – Performance,"
- DMS-8102, "Paint Systems for Galvanized Steel,"
- DMS-8103, "Galvanizing Repair Paints," and
- DMS-8105, "Paint, One-coat Overcoat."

DMS-8100 coatings are TxDOT-formulated coatings that manufacturers must make according to our formula and requirements. DMS-8101 coatings are paint manufactures' proprietary versions of steel bridge protective coatings.

DMS-8102 coatings are coating systems that can be used for galvanized items to create a duplex coating system with the galvanizing. At this time the default coating system for painting galvanizing is the epoxy intermediate and polyurethane appearance coat of DMS-8101.

DMS-8103 coatings are zinc-rich paints that can be used to do small repairs to galvanized items. These coatings contain a minimum of 94% metallic zinc in the dried film. The MPL for DMS-8103 paints can be found in the following link:
http://ftp.dot.state.tx.us/pub/txdot-info/cmd/mpl/coldgalv.pdf

DMS-8105 coatings are coatings that have passed testing as a one-coat overcoat coating. These coatings are meant to be applied to a structure with an intact and functional coating system that is experiencing some coating degradation or corrosion.

A.3. Paint Systems

Various paint systems are specified for TxDOT steel structures depending on the condition state of the structure and the service environment the structure is in. The

specifications containing steel coating requirements includes Item 407, “Steel Piling,” Item 441, “Steel Structures,” and Item 446, “Field Cleaning and Painting Steel.”

A.3.1. Item 407

Steel piling intended to be driven into the ground must be shop-painted with an inorganic zinc primer (IOZ). Intermediate or appearance coatings are not to be applied unless provided for in the plans. Typically, intermediate and appearance coatings are only specified for those portions of piling that will be above ground and are not applied until after the piling has been driven into the ground and any damaged IOZ has been repaired.

Steel intended to be driven into a marine environment must be painted with a coating system meeting the requirements of NORSOK Standard M-501, Coating System No. 7. This standard is an international performance standard and was developed for the offshore oil industry in Europe. The MPL for approved NORSOK paint systems can be found in the following link: http://ftp.dot.state.tx.us/pub/txdot-info/cmd/mpl/pntsyssp.pdf

A.3.2. Item 441

All new structural steel, excluding Weathering Steel or other special allow steels, must either be painted or galvanized. The standard paint systems for shop-painted new steel are System III-B and System IV.

System III-B consists of an application of IOZ primer, a stripe coat and full application of an epoxy intermediate, and an application of a polyurethane appearance coat. The IOZ primer must be applied in the shop but the intermediate and appearance coats are typically not applied until after the steel has been erected and all damaged IOZ primer has been repaired. This system is used for new steel intended for a coastal, marine environment but can also be specified for areas of the state experiencing severe corrosion issues from road salt use.

System IV consists of an application of IOZ primer and an application of an acrylic latex appearance coat. This is the default coating system for all new steel except steel intended for a marine, coastal environment or areas where corrosion from salt use is an issue.

A.3.3. Item 446

A.3.3.1. Overcoating

Overcoating refers to the practice of applying an additional coating to an existing coating system. This practice is primarily a maintenance step intended to extend the service life of the existing coating, which is experiencing some coating failure leading to minor corrosion. The existing coating system must not be experiencing adhesion failure and it must be compatible with the overcoat material. TxDOT has two overcoating systems, System I-A and System I-B.

System I-A consists of a single application of a one-coat overcoat and is intended for use as an affordable option in refurbishing an existing coating system experiencing some coating degradation or minor corrosion.

System I-B is a 3-coat system consisting of an application of an epoxy penetrating sealer, an epoxy intermediate coating and a polyurethane appearance coating. This system is intended for use in refurbishing structures experiencing minor coating degradation or corrosion in severe corrosion areas, such as along the coast or where road salt use is prevalent. However, construction costs for System I-B commonly equal those for a full blast and repaint, so it is often more economical to perform the full blast and repaint than attempt to refurbish the existing coating system.

The MPL for approved System I-A coatings can be found in the following link: http://ftp.dot.state.tx.us/pub/txdot-info/cmd/mpl/pntoco.pdf

A.3.3.2. Full Blast and Repaint

Full blast and repaint is recommended for existing steel structures that are experiencing corrosion or coating failure on 10% or more of the structure. System II and System III-A are the coating systems used when a full blast and repaint is specified.

System II is a 2-coat system consisting of an application of an epoxy zinc primer (OZ) and an acrylic latex appearance coating. This system is TxDOT's default paint system for repainting steel and is intended for use throughout the state except along coastal waters.

System III-A is a 3-coat system consisting of an application of an OZ primer, an epoxy intermediate coating and a polyurethane appearance coating. This system is intended for use in severe corrosion areas, such as along the coast or where severe corrosion from road salt use is prevalent.

The MPL for approved System II, III, and IV coatings can be found in the following link: http://ftp.dot.state.tx.us/pub/txdot-info/cmd/mpl/hicrnpnt.pdf

A.3.3.3. Special Protection Systems

Special protection systems are unique coating systems that are not categorized by any of the existing TxDOT paint systems. Examples of a special protection system include the NORSOK M501 System 7 coatings if specified for non-steel piling applications; moisture-cured urethane systems (MCU); systems specifying polyaspartic, polysiloxane or fluoropolymer appearance coats; zinc or aluminum thermal spray coatings (TSC); and calcium sulfonate coatings. These systems may be specified to address unusual site-specific conditions or as an experimental project to assess system performance. Experimental or trial projects should only be considered for minor or small projects and must involve the Materials Lab of the Construction Division.

A.3.3.4. Paint Systems Review

Table A-1 below summarizes the various TxDOT paint systems.

Paint Systems Recap

System Function	System	Primer	Intermediate	Topcoat	Notes
Overcoating	I-A	One-coat overcoat	N/A	N/A	
Overcoating	I-B	Penetrating epoxy sealer	Epoxy intermediate	Polyurethane	
Field Painting	II	OZ	N/A	Acrylic Latex	▪ Default system – non-coastal bridges
Field Painting	III-A	OZ	Epoxy intermediate	Polyurethane	▪ Coastal bridges ▪ Road salted bridges
Shop Painting	III-B	IOZ	Epoxy intermediate	Polyurethane	▪ Coastal bridges ▪ Road salted bridges
Shop Painting	IV	IOZ	N/A	Acrylic Latex	▪ Default system – non-coastal bridges

Table A-1. Summary of TxDOT Paint Systems

Figure A-1 below summarizes the recommended paint systems for new steel, according to region.

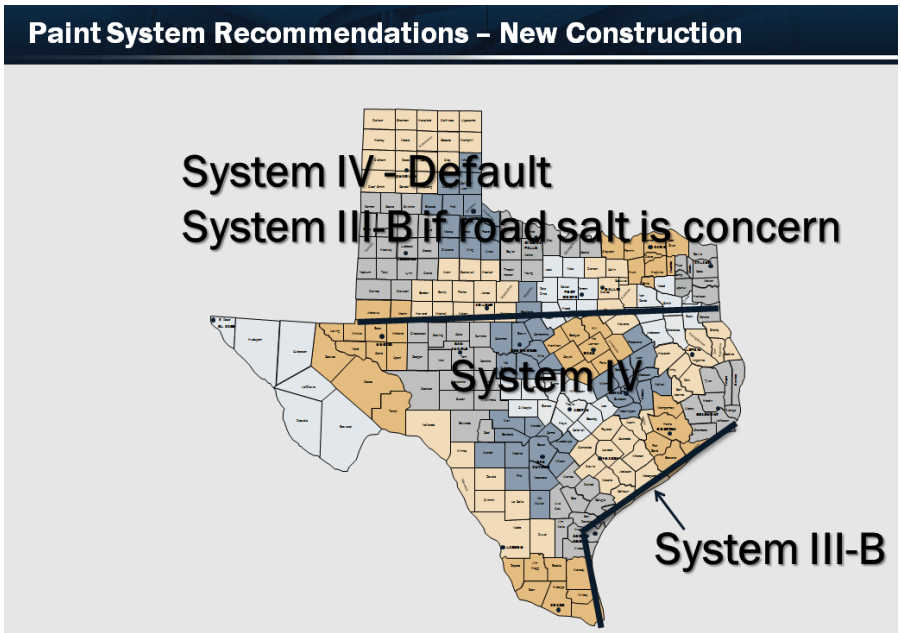

Figure A-1. Paint System Recommendations for New Construction

Figure A-2 below summarizes the recommended paint systems for field painting existing structures.

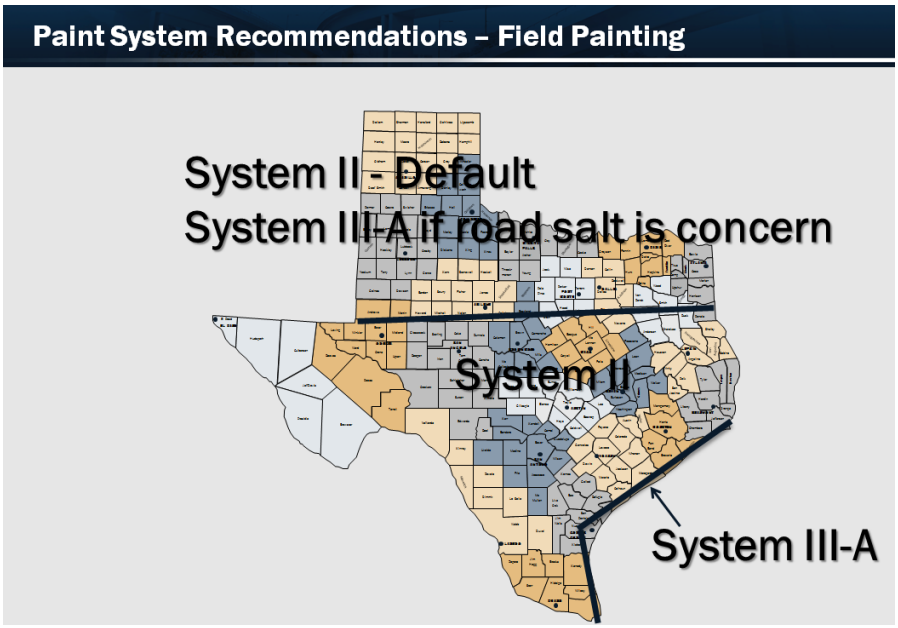

Figure A-2. Paint System Recommendations for Field Painting Existing Structures

A.4. TxDOT Painting Practices

TxDOT utilizes several types of painting practices for maintaining the structural integrity of its bridges. These include zone painting, overcoating, and full blast and repaint.

A.4.1. Zone Painting

Zone painting is the practice of specifying only a certain region or zone on a structure for repainting instead of repainting the entire structure. Zone painting is commonly done for areas under joints and for beam ends. The existing coating system must be in good condition with limited to no coating degradation or corrosion outside of the designated repaint zones.

Figure A-3. Image of Zone Painting

A.4.2. Overcoating

As noted before, overcoating refers to the practice of applying an additional coating to an existing coating system and is intended to extend the service life of the existing coating, which is experiencing some coating failure leading to minor corrosion. The existing coating system must not be experiencing adhesion failure and it must be compatible with the overcoat material. Additionally, no more than 10-20% of the structure's surface area can be experiencing coating failure or corrosion.

A.4.2.1. System I-A

System I-A requires only pressure washing of the existing structure to remove all loose coatings, dirt, and grime prior to application of the System I-A coating. The image below shows a structure with a coating system suitable for overcoating with System I-A.

Figure A-4. Structure Suitable for System I-A Overcoating

A.4.2.2. System I-B

System I-B requires pressure washing of the structure but also spot repair via power tools of all areas experiencing coating failure or corrosion. The necessity to perform surface preparation using power tools is the primary influence of the high cost of this practice.

Figure A-5. Structure Suitable for System I-B Overcoating

A.4.2.3. Structures Not Suitable for Overcoating

Structures experiencing coating failure or corrosion on more than 10-20% of its surface area or is experiencing wide-spread adhesion failure are not suitable for overcoating. The below image show structures that are not suitable for overcoating either due to too much corrosion or due to widespread coating adhesion failure.

Figure A-6. Structure Experiencing Too Much Corrosion for Overcoating

Figure A-7. Structure Experiencing Too Much Coating Adhesion Failure for Overcoating

A.4.3. Full Blast and Repaint

Full blast and repaint is the primary maintenance painting practice TxDOT utilizes for refurbishing the structural coatings on a steel structure. This practice requires the complete removal of all existing coating and rust and requires the use of full containment to capture all debris, especially if the structure contains leaded coatings. Oftentimes, a structure will be specified for full blast and repaint even if the existing coating system qualifies for overcoating so as to remove the existing lead-containing coating system.

Figure A-8. Structure Undergoing Full Blast and Repaint with Full Containment

A.4.3.1. Item 446 Requirements for Blast and Repaint Projects

Item 446 details numerous requirements for the blasting and repainting of steel structures. Of note, all contractors performing Item 446 work must be certified to either SSPC QP1 or 2, or NACE NIICAP AS-1 or 2. This certification must be received to the start of any Item 446 work. Also of note is the following containment and surface preparation requirements:

<u>Containment</u>

- the containment must meet SSPC Guide 6, Class 1A, Level 1,
- the enclosure of all sides of the containment area must be with air-impenetrable walls with overlapping seams and entryways,
- the containment floor must be a rigid, watertight floor formed from minimum 20 gauge steel, and
- the contractor must employ an air exhaust filtration system.

<u>Surface preparation</u>

- the entire structure must first be pressure washed with water,
- the default surface prep standard is SSPC SP-10 (blast to a near-white metal appearance),
- the minimum surface profile must be at least 1.5 mils to achieve adequate coating adhesion, and
- recyclable abrasive (steel grit) with an abrasive recycling system is required when the existing coating system contains lead; steel shot is never allowed.

A.4.4. Summary of Painting Practices

The below table summarizes TxDOT painting practices. The estimated costs are generalized costs based on bid prices for TxDOT projects prior to 2018.

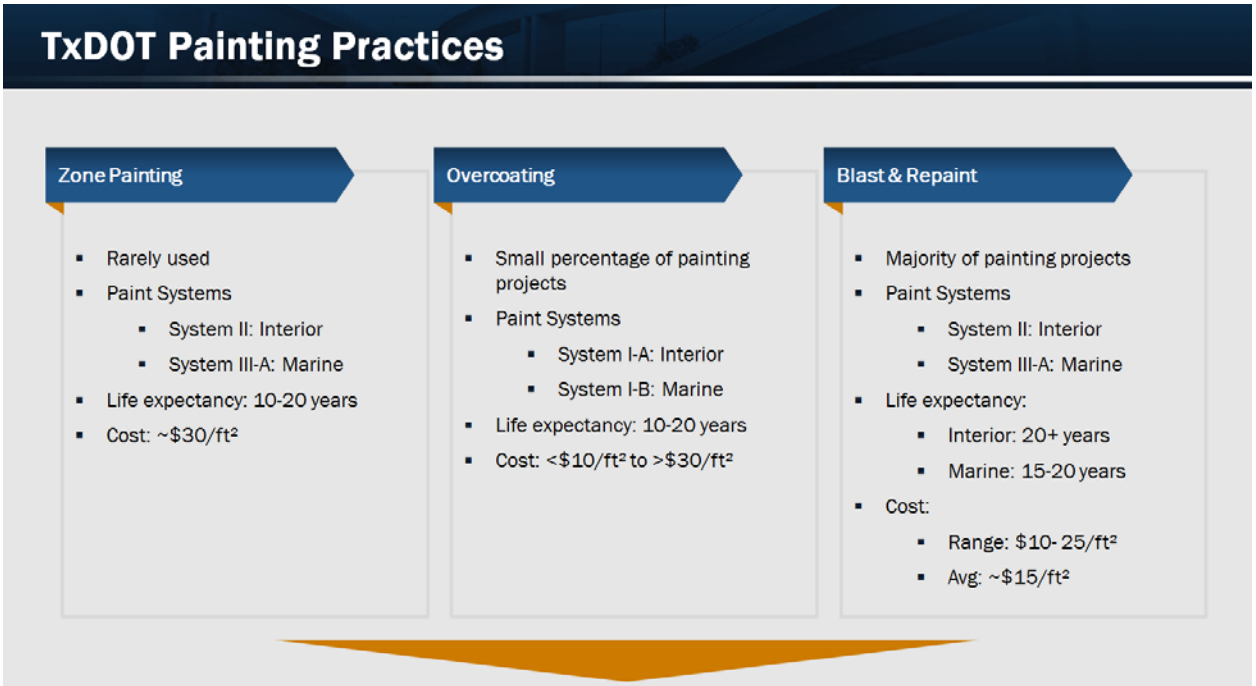

Table A-2. Summary of TxDOT Painting Practices

A.5. Recommendations

A.5.1. General Notes

The following general note is recommended for all blast and repaint projects:

A stripe coat shall be applied by brush to all rivets, bolts, edges, crevices, back-to-back steel components, corners, weld areas, and other detail areas as determined by the Engineer. Stripe coat shall be with the epoxy intermediate. Extend stripe coat at least 1" beyond limits of detail areas. Stripe coat must be free from holidays (total opacity). Stripe coat may not be reduced or thinned.

Additionally, the following general note is recommended for blast and repaints projects on structures containing expansive rust or crevice corrosion, particularly on truss-type bridges:

"Before applying the appearance coat but after application of the intermediate coat, caulk gaps or crevices greater than 1/16 inch throughout the length of the project. Use a paintable caulk meeting the requirements of DMS-8142, "Paintable Caulk for Concrete

and Steel," and that is listed on the MPL, "Paintable Caulk for Concrete and Steel." Apply sealant in a manner that does not trap moisture."

A.5.2. Pay Schedule Guidance

Item 446 work is paid by the Lump Sum. However, the lump sum amount is typically broken down and paid out in the form of progress payments as the work progresses. The following rules-of-thumb are recommended when making progress payments:

- Must be broken down, typically by span.
- Greater weight must be given to truss portions of bridge over girder segments.
- Contractor operations are typically sectioned by the Bay or Span
- Progress payments should follow the following breakdown:
  - no more than 40-50% payout (per Bay or Span division of Lump Sum) for blasting and priming of Bay or Span,
  - ~20% payout per additional coat – include stripe coat payment with the application of full intermediate coat, and
  - always retain 10-20% for touch-up and repairs after derigging and containment removal

A.5.3. Consultant Inspection and Project Assistance

CST maintains a consultant coatings inspection contract to provide 3rd-Party inspection for all types of coatings projects, including painting or metalizing of concrete or steel structures and certain types of structural repairs, such as CFRP wrap repair and patch repair of concrete. All 3rd-Party inspectors are NACE CIP certified with years of coating industry experience and understand all the nuances of the industry standards and practices. CST will provide project oversight and conduct periodic site visits. Experience has shown that the quality of the resulting coatings project is generally better when consultant inspection is utilized.

It is recommended that project managers of Item 446 projects, particularly on full blast and repaint projects, take the following NACE online training to obtain a general background understanding of a coating project: https://nace.org/Training-and-Education/Training-Programs/I-C-I--Online---Intro-to-Coating-Inspection/

A.6. Common Paint Questions

A.6.1. What do primers do?

Primers are the primary or first line of defense for protecting steel from rusting. The inhibitive type primers work by having pigments that inhibit the corrosion process. The sacrificial type primers contain zinc metal which sacrifices itself to protect the steel. TxDOT Systems II, III-A, III-B, and IV use a zinc primer for corrosion protection.

A.6.2. Why do we need an appearance coat?

The most important reason for the existence of the appearance coating (sometimes called a topcoat or finish coat) is to protect the primer. Epoxy primers are very chemically resistant but degrade in sunlight. By putting the topcoat or appearance coat over them, the sunlight cannot degrade them. Other primers may not be as susceptible to ultraviolet degradation from sunlight as are the epoxies but the appearance coats can still keep some of the water, dirt, grunge, pigeon deposits, etc. from degrading the primer.

Another major function of the appearance coating is to provide a uniform color and appearance. Zinc-rich primers do not come in a wide variety of colors. They are typically only in these three colors, greenish gray, reddish gray, and gray. If any other color is desired, the appearance coat is needed to provide this color.

A.6.3. What is an acrylic latex coating?

The term latex has been stolen from the rubber industry and is used for any emulsified resin. Latexes, or emulsified paints, are those where the resin or binder is dispersed in water, not dissolved. If the resin was dissolved in water, it would wash off when it rains. In these materials the resin is in the form of tiny balls that float around in the water. When the paint is applied, these resin particles float until the water evaporates, at which time they are forced together. The coalescing agent then melts the particles into a film and evaporates, leaving a paint film that will no longer dissolve in water.

There are all kinds of latex emulsions that are made into paint and they each have their place in the industry. Vinyls, vinyl-acrylics, styrene butadienes, etc. are some of the others. Vinyls and vinyl-acrylics are used for interior coatings because they get brittle and degrade on alkaline surfaces, such as concrete. Styrene containing resins are hard and cheap but they degrade in sunlight. For this reason, we specify acrylic latexes. Acrylics do not degrade in sunlight or on alkaline surfaces. They stay flexible and can withstand the expansion and contraction of structures well.

A.6.4. Why are Systems III-B & IV only used in the shop?

Inorganic zinc primers tend to dry spray and it is important for the painter to have easy access to the surface to reduce the time that the paint spray is in the air and drying out. If the paint droplets travel too far through the air, they dry out so much that when they reach the surface, they are too dry to melt together and to adhere properly. These primers also will mudcrack and flake upon drying if they are applied too heavily. This should be easily visible soon after the primer dries to touch and will look like a mud puddle drying in the sun.

In the shop, the steel is setting on the floor and the painter has easy access to all parts of the surface which allows him to properly spray a good wet coat assuring film integrity and adhesion. In the field, access is often more difficult depending on the rigging used and the configuration of the work area. Sometimes the painters cannot easily get close enough to the surface for proper spray techniques. At these times, an inorganic zinc primer would be more prone to dry spray than an organic zinc primer.

On the repaint structures, the diaphragms and other connectors are in place. For the painter to apply paint to all parts of these pieces, he has to make multiple passes with the spray gun. This will cause excessive thickness leading to mudcracking, which will shorten the life of the coating and hence its corrosion protection potential. Sometimes these areas are not easily visible to the inspector and if mudcracking occurs, it is not easily found.

A.6.5. How do I Select between Systems I, II, III & IV?

For repaint projects, System II, III-A or a Special Protective System is to be used. Systems I (Overcoating) are to be used if the structure is only experiencing minimal coating failure or corrosion, typically on less than 10-20% of the surface of the structure. Three-coat systems, like System III-A and III-B, are the industry standard for high corrosion environments. See Tables 1-3 for general recommendations.

A.6.6. What is a Special Protection System?

The Special Protection System is the catch-all category that allows one to specify paints other than those in the other TxDOT paint systems. This can be a different combination of the paints specified in DMS-8101 or any other paint type that is needed for the project.

Since these are not standard systems, the material requirements (paint properties) and types of paints must be identified, the cleaning, preparation and expected dry film thickness of the coating must be specified, and anything else that is needed to get the project done properly must be clearly spelled out.

A.6.7. What System do I specify if I am concerned about Graffiti?

An anti-graffiti coating can be used by specifying the Special Protection System in Item 446. The Special Protection System will be System II with an anti-graffiti coating meeting DMS-8111 substituted for the acrylic latex appearance coat.

Note: For more information on Anti-Graffiti coatings, see Section A.12.

A.6.8. What kind of lifetime can we expect from each of these systems?

The general rule-of-thumb for system service life is the following:

- Overcoating: ~10-20 years
- Blast and Repaint (inland): ~20+ years
- Blast and Repaint (high corrosion environment): ~15-20 years

A.6.9. Can I specify a certain paint and then say “or equal” to have competition?

Specifying “or equal” is not considered to be good industry practice and is not recommended. Qualifying a competing product to what is specified is difficult to do as

often the necessary performance parameters or necessary component qualities of what is desired by the specifier are not adequately known.

A.6.10. What are “weld through” primers?

These are zinc primers that are applied to new steel that do not have to be removed before welding. When a piece is painted in the shop, the parts that are to be welded are blocked-out so that they do not get any paint where the weld will be. The labor of measuring these areas and applying masking adds cost to the production of the steel piece. By using a “weld through” primer, these block-outs are not used and the labor is saved.

The usefulness of the concept did not overcome the problems that were discovered during investigation of these paints.

There is the safety concern for the welder. Breathing the zinc fumes when he burns through the primer is not good for the worker.

There is the problem of the application of these primers. They need to be kept in the 1 mil range and applying too thick of a coating can be bad for the welding. These coatings are usually inorganic zinc primers with a lower zinc loading than those that meet our specification. This leaves us in the situation of having a lower grade of primer under the main coating that is needed to protect the steel.

Then there is the concern about the residue from primer being trapped within the weld material. For the inorganics, we could get silica and zinc mixed in the weld and if the coating is organic, there could also be carbon and hydrogen.

For these reasons, weld-through primers are not recommended for TxDOT projects.

A.7. Containment

A.7.1. What is containment?

Containment is the requirements, equipment, and actions of containing debris created during the cleaning process in preparation for painting of a substrate. This applies to abrasive blasting but also includes hand- or power-tool cleaning. It requires containing the blast debris of paint chips and blast media and includes containing the dust created during the abrasive blasting.

A.7.2. What is negative pressure containment?

Negative pressure containment is a method of containing debris using a dust collector that exhausts more air from the containment structure than is brought in by the blasting process. This dust collection or air removal process must have sufficient volume of air removal that the sides of the containment must be concave inward.

A.7.3. Is containment required for System I cleaning?

Minimal containment may be used in lieu of a full containment system to ensure the capture and collection of all paint chips during the power washing portion of the cleaning, as well as, all debris removed during the hand- or power-tool cleaning.

A.8. Hazard Waste

A.8.1. What is hazard waste?

These are materials that are defined by the Resource Conservation and Recovery Act (RCRA) as hazardous to human health if they are allowed to enter into the environment.

A.8.2. What materials are considered hazardous?

The list contains 8 metals and a large list of organic (containing carbon & hydrogen) chemicals. The metals are the ones that concern us in the paint industry. Of the listed metals, (arsenic, barium, chromium, mercury, nickel, lead, silver, & selenium) lead and chromium are the two most likely to be used in paints on TxDOT bridges.

A.8.3. How do we prepare for a painting contract?

One of the first steps is to find out if there is a material on the structure that will be considered as hazardous waste when it is removed. To do this, one would take samples of the paint and have them tested for hazardous content. Some people only test for the lead content but a safer method would be to test for all 8 of the listed metals.

A.8.4. How do I take samples to test?

Paint should be sampled per Test Method Tex-819-B. The samples must include all coats of the existing paint. Typically, it is the primer that contains the hazardous materials. If only the appearance coat is sampled, the test may not show any hazardous materials and the contractor will be misled.

Find an area where there is little or no rust to remove the samples. The iron in the rust can give a false test result. Some old paints can be softened for scraping by heating with a torch. [Some paints will not soften with heat, so if this is tried and the paint does not soften easily, discontinue heating.] Remove enough paint sample to fill a sandwich-type plastic bag about the thickness of a finger.

Some structures have more than one paint system on them. All systems need to be tested. Sometimes, if a bridge was widened, the new steel does not have the same paint as the old part of the structure. [One clue to look for is the overspray on the bottom of the deck adjacent to the steel. If the overspray is different colors on different areas, there is probably more than one paint system on the bridge.]

A.8.5. What is the "total lead" results that we receive from the lab?

This is a test result telling you how much lead was in the paint chips that were tested. These results are used to determine the probability that the contained debris will test as hazardous.

A.8.6. What is "TCLP?"

This test is the "Toxicity Characteristic Leaching Procedure." It is the test used to determine if the waste that was generated is hazardous.

This test simulates how much hazardous material would leach into ground water if the waste was buried in a standard landfill. The waste is soaked in water then the water is tested for the hazardous materials.

A.8.7. How is the TCLP different from the total lead test?

The total lead test tells us how much lead is in the sample and the TCLP tells us how much would leach out into the water table if the waste is dumped improperly. TxDOT uses total lead test results to determine if a project can be let as a non-hazardous material (i.e. non-lead) project. The TCLP test is used by the Contractor to determine how the spent blast debris material will be characterized and hence where the debris can be disposed of.

A.8.8. Why not just run the TCLP on the paint chips?

Before the paint is removed from the bridge, it is not a waste and this test does not apply. Also, the waste generated during removal is composed of more than the paint waste. It contains some of the blast media and other dirt and contaminants that were on the paint when it was blasted off.

A.8.9. Why do we have to know this before letting a contract?

We need to let the contractor know if the project is a lead removal project before he bids it. A lead removal project invokes recyclable abrasive requirements, OSHA safety rules for the workers, and the disposal of the waste to a proper disposal site.

A.8.10. Why do we specify recyclable abrasives for leaded jobs?

By reusing the abrasives, the contractor generates less waste and we do not create problems for the disposal sites.

Note: Before letting a painting contract contact the Construction/Maintenance Branch of the Bridge Division Field Operations to find out the latest details about containment and waste disposal & handling.

A.9. Galvanized Steel

A.9.1. Which lasts longer, painting or galvanizing?

The best corrosion protection from using zinc that can be provided for steel is galvanizing. In this process, the sacrificial zinc metal is applied by dipping the steel in molten zinc. This process not only coats the steel with the zinc but the iron and zinc melt together to alloy into a very tight bond. The zinc film is also impervious to moisture penetration. With paints, the molecules of the binder resin are much larger than the water molecule and water can migrate through the coating. With galvanizing, the zinc atoms pack next to each other with no space between them for the water to penetrate through.

Galvanizing is not always the best system. In high chloride, highly acidic or alkaline environments, the zinc can degrade too rapidly and not provide the life that is desired. Galvanized structures in high corrosion environments can be protected by coating the galvanized surface with a durable appearance coat (called in the industry a “duplex” system). The default TxDOT coating system for painting galvanized items is the epoxy intermediate and polyurethane topcoat of System III.

A.9.2. Why not just galvanize everything?

Galvanizing tanks are only so large and not everything can fit into them. The longest one currently is 82 feet. Design details needed to accommodate the thermal expansion that come with dipping the piece in a tank filled with 850ºF molten zinc are very important. These expansion forces have been known to break 1-inch thick plates.

These forces are even worse when a part is too big to be dipped completely and needs to be double-dipped. In this process, one side of the part is dipped and coated then turned over and the other side is dipped. In the transition area between the hot expanded part and the still cool undipped part, huge forces are created. The hot part can expand by several inches while the cool part does not.

A.9.3 How should I write plan notes if I desire to paint over galvanizing?

These details are now in Item 445 of the Standard Specification book.

A.10. Colors

A.10.1. What do I have to put in the plan notes (color, top coat type, etc)?

The default color for Item 446 paint systems is a concrete gray meeting Federal Color Standard 595C, color 35630. If a color other than this color is desired then this needs to be noted in the General Notes using the Federal Color Standard 595C color scheme.

B.Paint Durability Questionnaire

This questionnaire can be provided by the project engineer to the contractor to be answered by the paint supplier. The intent is to assure that TxDOT gets light- and weather-fast color pigments used in appearance coatings that will not fade in a short time. This may include communication of the paint supplier with the company technical support to answer these questions.

PAINT DURABILITY QUESTIONNAIRE

Questions to be taken to the paint supplier by the contractor to assure that the weatherability of the color pigments used in the appearance coating will provide durability of the final color.

Will "universal" tint colors (those designed to be used with any solvent- or water-borne paint) be used?

Is one of the colorants "Iron Blue"?

Are any of these other colorant types to be used?

Mono Azo (Pigment yellow 1, 3, 73, 74)

Diarylide (Pigment yellow 83, 12, 13, 17)
[Some versions of PY83 (opaque version) are lightfast.]

BON Reds (Pigment red 48, 52, 57, 60)

Toluidine Red (Pigment red 3)

DNA Orange [Dinitraniline orange] (Pigment orange 5)

If the answer is "**yes**" to any of these questions, have someone who is familiar with the light- and weather-fastness of pigments and tints contact the project engineer. They will discuss modifying the color to one that is acceptable and is made with color pigments that will not fade quickly.