US Army Corps
of Engineers

GALVESTON DISTRICT
SOUTHWESTERN DIVISION

GULF INTRACOASTAL WATERWAY - ARANSAS NATIONAL WILDLIFE REFUGE, TEXAS

FEASIBILITY REPORT
AND
FINAL ENVIRONMENTAL IMPACT STATEMENT

VOLUME 1: MAIN REPORT

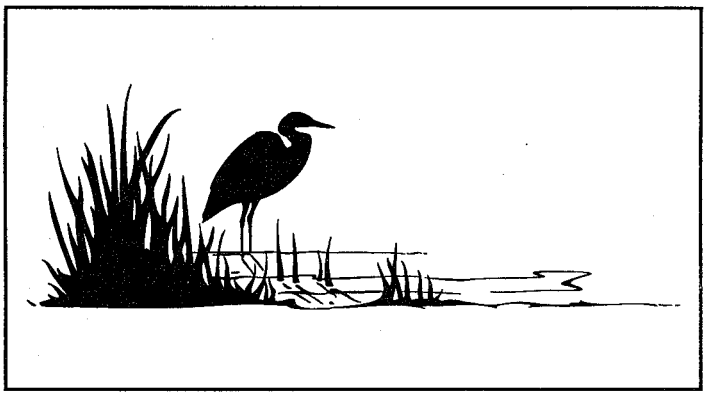

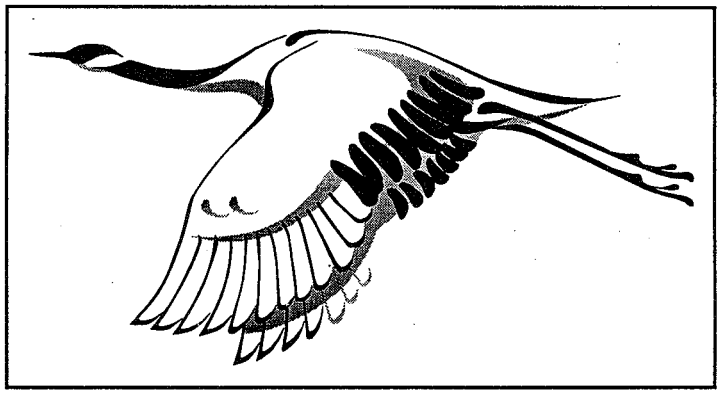

NOVEMBER 1995

SYLLABUS

This Final Feasibility Report presents the results of investigations to provide protection to the critical habitat area of the endangered whooping crane. Justification for measures recommended in this report are based on provisions of the Endangered Species Act of 1973. The Gulf Intracoastal Waterway traverses approximately 31 miles of the critical habitat area and includes portions of the Aransas National Wildlife Refuge and the privately-owned Welder Flats area and State-owned Welder Flats Coastal Preserve located on the easterly portion of the study area. Erosion along the channel banks is occurring from a combination of causes, including waterway usage and natural processes.

Various alternatives to reduce erosion through this reach and to minimize impacts from possible contaminant spills that could occur from waterway traffic were investigated. These measures included channel rerouting outside of the critical habitat, alternate routes within the critical habitat, and retention of the existing channel alignment.

As a result of these investigations and through coordination with the various Federal and State resource agencies, the plan ultimately selected consists of providing 62,000 feet of bank protection for erosion control and the installation of permanent facilities for ready-deployment of spill control measures. The recommended bank protection is in addition to that previously installed (prior to 1996) as well as that which is planned to be installed through 1997 under the Operations and Maintenance program.

This report has demonstrated a Federal interest in providing erosion protection to areas within the critical habitat of the endangered whooping crane adjacent to the waterway and providing spill containment features and equipment to protect those areas from accidental hazardous spills. Total construction costs for this plan, including detail design costs, is estimated at $17,819,000, all of which will be Federal costs. Average annual maintenance cost for these plan features is estimated to be approximately $49,000. Operation, maintenance, repair, replacement, and rehabilitation will be the responsibility of the Corps of Engineers. Deployment of spill containment booms and clean-up following an accidental spill will be the responsibility of the Texas General Land Office, U.S. Coast Guard, and the U.S. Fish and Wildlife Service. Project construction is currently planned to begin in April 1998 and be completed by October 2000.

Associated with the plan, but not a part of the recommendation for Congressional authorization, is the development of a long-term dredged material management plan for future maintenance activities along this reach of the waterway. The long-term dredged material management plan provides for the beneficial use of channel maintenance material

to create 1,614 acres of new marsh over a 50-year period. The disposal plan will be implemented through the Operations and Maintenance program.

This report contains a Final Environmental Impact Statement which considers project impacts as well as those associated with the long-term dredged material disposal plan. The requirements of Section 404(r) of Public Law 92-500, as amended, have been met.

GULF INTRACOASTAL WATERWAY
ARANSAS NATIONAL WILDLIFE REFUGE
(SECTION 216 STUDY)
FEASIBILITY REPORT

TABLE OF CONTENTS

SECTION	PAGE
INTRODUCTION	1
DESCRIPTION OF THE AREA	1
STUDY AUTHORITY	3
STUDY PURPOSE AND SCOPE	3
STUDY PARTICIPANTS AND COORDINATION	5
PRIOR STUDIES AND REPORTS	6
THE STUDY PROCESS	6
HISTORY OF THE AREA	8
HISTORY OF THE WHOOPING CRANE	8
HISTORY OF THE ARANSAS NATIONAL WILDLIFE REFUGE	9
HISTORY OF THE GIWW	10
EXISTING CONDITIONS	13
CLIMATE	13
PHYSIOGRAPHY	13
AQUATIC RESOURCES	14
TERRESTRIAL RESOURCES	15
GULF PRAIRIE	16
GULF SANDS	16
SALTMARSH	16
WILDLIFE RESOURCES	17
CRANE USAGE OF HABITAT TYPES	18
THREATENED AND ENDANGERED SPECIES	19
HISTORIC RESOURCES	22
HAZARDOUS AND TOXIC WASTE CONSIDERATIONS	22
POPULATION	23
ECONOMIC BASE	23
SOCIOECONOMIC VALUES	24

TABLE OF CONTENTS

SECTION PAGE

PROBLEM IDENTIFICATION 22
PROBLEMS, NEEDS, AND OPPORTUNITIES 25
CAUSES OF EROSION 25
CORPS OF ENGINEERS' EFFORTS TO CONTROL EROSION 27

FORMULATION OBJECTIVES, CONSTRAINTS, AND CRITERIA 33
NATIONAL OBJECTIVES 33
PLANNING OBJECTIVES 34
PLANNING CONSTRAINTS 34
FORMULATION AND EVALUATION CRITERIA 35
TECHNICAL CRITERIA 35
ECONOMIC CRITERIA 35
ENVIRONMENTAL CRITERIA 36
SOCIAL AND OTHER CRITERIA 37
PLAN FORMULATION RATIONALE 37

FUTURE WITHOUT-PROJECT CONDITIONS 39

PLAN FORMULATION 42
ALTERNATIVES 42
NO-ACTION PLAN 43
NONSTRUCTURAL PLANS 43
STRUCTURAL PLANS 44

SYSTEM ANALYSIS 45
SYSTEM DESCRIPTION 45
OPERATION AND MAINTENANCE 46
MAINTENANCE DREDGING HISTORY 46
Matagorda Bay to San Antonio Bay 48
Turnstake to Like Oak Point (across San Antonio Bay) 48
San Antonio Bay to Corpus Christi Bay (via Lydia Ann Channel) 48
Channel to Victoria 48
MAINTENANCE COSTS 49
BENEFIT ANALYSIS 50
INLAND NAVIGATION TRANSPORTATION BENEFITS 50
ECONOMIC ANALYSIS 53
CONCLUSIONS 54

SECTION PAGE

PLAN ASSESSMENT AND SCREENING OF ALTERNATIVES 55
GENERAL SCREENING 55
EROSION CONTROL DEVICES 55
OPERATIONAL OR OTHER CHANGES TO EXISTING CHANNEL 67
INITIAL SCREENING 68
ALTERNATIVE 1 - NORTH ALIGNMENT 69
Costs 70
ALTERNATIVE 2 - EXISTING CHANNEL WITH BANK PROTECTION 72
Costs 73
ALTERNATIVE 3 - OPEN BAY ALIGNMENT 75
Costs 78
ALTERNATIVE 4 - BARRIER ISLAND ALIGNMENT 79
Costs 80
COMPARISON OF PLANS 82
FINAL SCREENING 83
EXISTING CHANNEL WITH BANK PROTECTION 84
Advantages/Disadvantages 84
Average Annual Costs 85
OPEN BAY ALIGNMENT 86
Advantages/Disadvantages 86
Average Annual Costs 87
PLAN COMPARISON 87
Delphi Technique 88
Summary 90
SCREENING RESULTS 90
SELECTED AND NATIONAL ECONOMIC DEVELOPMENT (NED) PLAN . . . 91
FIFTY-YEAR DREDGED MATERIAL DISPOSAL PLAN 92
COST SUMMARY OF FIFTY-YEAR DISPOSAL PLAN 100
ENVIRONMENTAL EFFECTS OF FIFTY-YEAR DISPOSAL PLAN 100

DESCRIPTION OF SELECTED PLAN 101
PLAN COMPONENTS 101
SPILL CONTAINMENT COMPONENTS 101
BANK EROSION PROTECTION 101
PLAN CONSTRUCTION 105
COST SUMMARY OF SELECTED PLAN 105
DESIGN AND CONSTRUCTION CONSIDERATIONS 106

TABLE OF CONTENTS

SECTION PAGE

OPERATIONS AND MAINTENANCE CONSIDERATIONS 107
PLAN ACCOMPLISHMENTS 108
SUMMARY OF EFFECTS 108
ECONOMIC EFFECTS 108
ENVIRONMENTAL EFFECTS 108
Effects on Biological Resources 108
Effects on Threatened or Endangered Species 109
Effects on Historic Resources 110
Hazardous and Toxic Waste Considerations 110
Social Effects 110
RISK AND UNCERTAINTY 110

PLAN IMPLEMENTATION 112
DIVISION OF PLAN RESPONSIBILITIES 112
COST SHARING REQUIREMENTS 112
NON-FEDERAL SPONSOR VIEWS 113

SUMMARY OF COORDINATION, PUBLIC VIEWS, AND COMMENTS 114

RECOMMENDATIONS 115

LIST OF TABLES

TABLE		PAGE
1	List of Threatened and Endangered Species	20
2	Length (feet) and Cost of Cellular Concrete Mattress Constructed Along the GIWW Inside Whooping Crane Critical Habitat by O&M	28
3	1993 Erosion Protection	29
4	1994 Erosion Protection	29
5	1994 Grout Bag Placement	30
6	Potential Vessel Impacts	41
7	Summary of Maintenance Dredging History	49
8	Summary of Maintenance Dredging Costs	49
9	1992 Tonnage by Commodity Moving Through, To, or From the ANWR Study Area	51
10	Shipping/Receiving Ports Within or West of the ANWR Study Area with Tonnage Moving Through, To, or From the Study Area	52
11	Aransas System Segment Transportation Costs	53
12	Aransas System Segment Economic Analysis	54
13	Advantages and Disadvantages of Structures	66
14	Alternative 1 - North Alignment - New Work and Maintenance Dredging Quantities	70
15	Cost of Alternative 1 - North Alignment	72
16	Alternative 2 - Existing Channel - Maintenance Dredging Quantities	75
17	Cost of Alternative 2 - Existing Channel	75
18	Alternative 3 - Open Bay Alignment - New Work and Maintenance Dredging Quantities	78
19	Cost of Alternative 3 - Open Bay Alignment	79
20	Alternative 4 - Barrier Island Alignment - New-Work and Maintenance Dredging Quantities	80
21	Cost of Alternative 4 - Barrier Island Alignment	82
22	Plan Comparison	83
23	Cost Comparison of Disposal Options for the Existing Channel Alternative	85
24	Cost Comparison of Disposal Options for the Open Bay Alignment	87
25	Plan Comparison	88
26	Beneficial Use Sites	93

LIST OF TABLES

TABLE		PAGE
27	Dredging and Disposal Summary	95
28	Disposal Plan for Maintenance Material - Reach 1 - Station 696+000 to Station 724+000	96
29	Disposal Plan for Maintenance Material - Reach 2 - Station 724+000 to Station 769+000	97
30	Disposal Plan for Maintenance Material - Reach 3 - Station 769+000 to Station 839+000	98
31	Disposal Plan for Maintenance Material - Reach 4 - Station 839+000 to Station 860+000	99
32	Length (feet) of Shoreline Along the GIWW Inside the Whooping Crane Critical Habitat That Has Been or Will be Protected by Cellular Concrete Mattress	102
33	Location of Bank Protection	103
34	Cost Estimate - Selected Plan	106
35	Cost Summary for Selected Plan	107
36	Direct and Indirect Losses and Gains (acres) of the Recommended Plan	109

LIST OF FIGURES

FIGURE		PAGE
1	Study Area Map	0
2	Locations of 1992-1994 Protection	31
3	Locations of 1992-1994 Protection	32
4	Maintenance Dredging History	47
5	Embankment	57
6	Embankment and Stone Protection	58
7	Embankment and Gabions	59
8	Embankment and Sand or Grout Bags	60
9	Vertical Sheetpile Wall	61
10	Stone Protection	62
11	Grout Tubes	63
12	Tire Revetment	64
13	Concrete Mattress Revetment	65
14	Riprap Revetment	65
15	North Alignment	71
16	Existing Channel Alignment	74
17	Open Bay Alignment	77
18	Barrier Island Alignment	81
19	Erosion Protection - Typical Sections	104

APPENDICES

NO.	TITLE
APPENDIX A -	Spill Analysis Reports
Section 1 -	Spill Contingency and Prevention Plan
Section 2 -	Qualitative Contaminant Spill Analysis
Section 3 -	Oil Spill Contingency Plan for Aransas National Wildlife Refuge, Texas
APPENDIX B -	Environmental Documentation
Section 1 -	Fish and Wildlife Coordination
Section 2 -	Endangered Species Act Correspondence
Section 3 -	Section 404(b)(1) Evaluation
Section 4 -	Historic Resources Coordination
Section 5 -	Estuarine Habitat Study
Section 6 -	1989 USCE Biological Assessment and 1993 USFWS Biological Opinion
Section 7 -	Compatibility Determination for the Aransas National Wildlife Refuge
Section 8 -	Comments on EIS and Responses
APPENDIX C -	Engineering Appendix
APPENDIX D -	Real Estate Appendix

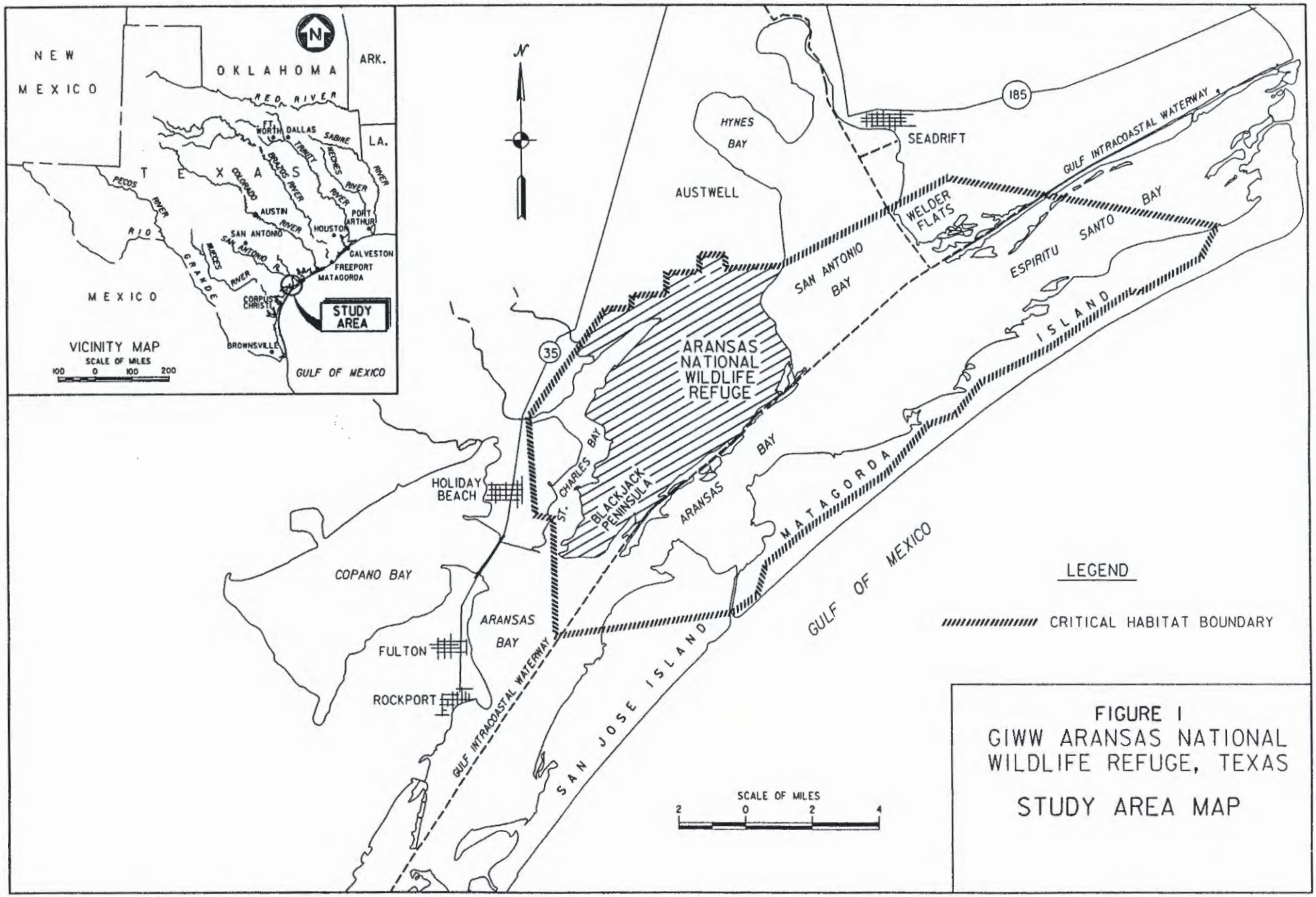

FIGURE I
GIWW ARANSAS NATIONAL WILDLIFE REFUGE, TEXAS
STUDY AREA MAP

GULF INTRACOASTAL WATERWAY - ARANSAS NATIONAL WILDLIFE REFUGE (SECTION 216) FEASIBILITY REPORT

INTRODUCTION

This report contains the results of studies investigating the environmental losses of critical habitat of the whooping crane and the protection afforded the habitat through the Endangered Species Act (1973). These erosion losses are in part caused by the Gulf Intracoastal Waterway (GIWW), a Federal navigation project. The Act requires every Federal agency to insure that any action it authorizes, funds, or carries out is not likely to jeopardize the continued existence of any listed species or result in the destruction or adverse modification of critical habitat.

Several alternative channel alignments have been evaluated to minimize habitat losses from natural and navigation-related erosion as well as reducing the potential of spills which could affect the whooping cranes or their habitat. Economic factors were considered from a least cost standpoint in determining the selected alignment, spill contingency plans, and the development of a long-term dredged material disposal plan.

The Federal interest in the development of an erosion control plan for this area is based on the provisions of the Endangered Species Act which provides protection for the endangered species, i.e., the whooping crane, as well as its critical habitat.

This report satisfies the requirements of the Endangered Species Act.

DESCRIPTION OF THE AREA

The Aransas National Wildlife Refuge (ANWR), located on Blackjack Peninsula, is a 54,289-acre sanctuary established in 1937 as a conservation measure to protect the rare and endangered whooping cranes in their natural wintering habitat. The Refuge's primary function is to provide a wintering area for waterfowl, wading birds, and whooping cranes, although it also serves as habitat for many other birds and mammals such as turkey, deer, javelina, raccoons, armadillos, and opossums. Whooping cranes use the many shallow bays, lagoons, and marshes in the Refuge as wintering habitat from late October to early April. Although the crane population reached a low of only 16 birds in 1941, 133 birds wintered in the area in the 1994-1995 season. In the 1989-1990 and 1990-1991 seasons,

a total of 146 birds wintered in the area. Whooping cranes were classified as endangered under the Endangered Species Act (ESA) in 1970, and full protection was established in 1978 by designating critical habitat under provisions of the ESA. Protection was extended internationally by a memorandum of agreement between Canada and the United States in 1986.

The study area for this feasibility study encompasses a 42-mile reach of the Gulf Intracoastal Waterway (GIWW) from channel miles 479 to 521 measured from the Harvey Locks, Louisiana. This includes a 13.25-mile segment through the ANWR and the portion of the waterway within the critical habitat of the whooping crane. This area is located in Aransas and Calhoun Counties, about 35 miles northeast of Corpus Christi, Texas. This feasibility study is referred to as the ANWR, but it should be understood that it includes the entire critical habitat of the whooping crane. The study area is shown in Figure 1.

This reach of the waterway is characterized by a series of low, relatively long and narrow islands on the south side and shallow bays, headlands, and several islands on the north side of the channel. Several islands on the south side were created from land cut off from the mainland by construction of the existing channel alignment and by disposal of construction material from the channel on the bay side. Other islands have been expanded and raised by deposition of maintenance material from dredging operations. Those islands still being used for disposal have been fully leveed since 1974 to prevent flow of maintenance material to the surrounding wetlands.

Critical habitat of the wintering grounds of the whooping crane is gradually being lost to erosion caused by combinations of vessel traffic in the GIWW, natural current and wave action, and to some extent, dredged material disposal practices. This habitat is being lost at a rate of approximately 2 acres per year. Certain reaches in the ANWR along the north bank of the GIWW have experienced long-term erosion rates of 3 feet per year. This shoreline regression eventually invades shallow potholes in the marsh, which immediately begin to deepen as wave and tidal action scour the soft sediments from them. These potholes and surrounding marsh are the preferred feeding areas of the cranes because of the abundance of crabs, shrimp, and clams (the cranes preferred food). The deeper areas are essentially lost as prime habitat over time because they are not conducive to the feeding habits of the cranes.

STUDY AUTHORITY

This feasibility study was conducted under authority of Section 216 of the 1970 Flood Control Act which provides for review of completed Corps of Engineers' projects for modification because of changes in physical or economic conditions. This Section 216 authority reads as follows:

> "The Secretary of the Army, acting through the Chief of Engineers, is authorized to review the operation of projects the construction of which has been completed and which were constructed by the Corps of Engineers in the interest of navigation, flood control, water supply, and related purposes, when found advisable due to significant changed physical or economic conditions, and to report thereon to Congress with recommendations on the advisability of modifying the structures or their operation, and for improving the quality of the environment in the overall public interest."

Funds to initiate the feasibility phase of the study were received in September 1990. The local sponsor for the GIWW is the State of Texas. The Texas Department of Transportation is the designated representative for the State of Texas in all local sponsor activities. The State of Texas was not required to cost share in this study. All initial construction costs will be fully funded through Congressional appropriations.

STUDY PURPOSE AND SCOPE

The purpose of this study is to develop and evaluate alternatives to eliminate or significantly lessen the impacts from commercial navigation on the GIWW to the critical habitat of the whooping crane. This study investigated the bank erosion problems, maintenance dredged material practices, and potential solutions for these problems in feasibility-level detail.

Early in the reconnaissance study, it became apparent that solutions to the problems associated with the loss of whooping crane critical habitat must be resolved in three different time frames -- "short-term", "mid-term", and "long-term."

The first of the "short-term" solutions was achieved in August 1989. Temporary bank erosion control measures composed of stacked cement bags staked in place with reinforcing bars were put in place by volunteers along a 1,200-foot section of the waterway. In the summers of 1990, 1991, and 1992, cement bags were again placed by volunteers along 1,500-foot, 1,875-foot, and 2,325-foot sections of the waterway, respectively.

INTRODUCTION

In 1991, Refuge personnel experimented with a longer-term solution to the erosion problem by placing 400 feet of articulated concrete mattress west of Sundown Bay. Refuge personnel were pleased with the results of the test and recommended the District adopt the procedure. Beginning in 1992, articulated concrete mat slope protection was added along specific sections of the channel through the District's Operations and Maintenance program. Although this protection was added during the short- or mid-term time frame, the mat protection offers a long-term solution. In 1992, 1,968 feet of articulated concrete mat was placed. In 1993, about 7,000 feet of mat was placed and another 6,967 feet placed in the summer of 1994. Only about 1,750 feet of mat were placed along the Refuge shoreline in 1995, because the construction site had to be relocated with little time remaining in the construction window (when whooping cranes are at their summer breeding grounds). A minimum of 2,000 feet of mat is planned to be placed each succeeding year until construction of a long-term solution is implemented.

The identification of "mid-term" solutions centered around demonstration activities to identify the most effective measures to protect critical habitat and secondarily to beneficially use dredged material where it was environmentally acceptable. Both on- and off-site efforts (Galveston Bay) were considered. The major concerns for on-site projects were the construction window of mid-April to mid-October, site monitoring during the time cranes are wintering in the area, and the desire of only installing measures that have a high probability of success.

Support from the Corps' Waterways Experiment Station in Vicksburg, Mississippi was requested to provide advice and assistance in developing baseline conditions, designing the demonstration project, and designing and implementing the monitoring program. In concert with routine maintenance dredging activities through the ANWR in the summer of 1993, two existing disposal areas were expanded. For one area, an earthen levee breakwater with stone riprap protection was constructed to enlarge a confined disposal area to create additional wetlands using dredged material. The other area consisted of the use of grout tubes to retain dredged material at an existing emergent dredged material disposal site. This on-site demonstration project was coordinated with the U.S. Fish and Wildlife Service, the Refuge, and others prior to implementation.

An off-site demonstration area was planned and implemented in West Galveston Bay where similar conditions to that of the ANWR area exist. Several types of slope protection were installed to compare the relative merits of each type. The results from this site will be considered in the final design of the long-term dredged material management plan for the ANWR.

In addition to the two demonstration sites described above, a mitigation site was constructed in two phases by the Mitchell Energy and Development Company within the critical habitat of the whooping crane. The first phase, constructed in 1991, consisted of a 13-acre island with concrete mats for erosion control and a Spartina marsh planted on dredged material taken from a new channel cut to an oil well in Mesquite Bay. During the second phase in 1993, a similar 9-acre site was constructed adjoining the first mitigation site. The wetland appears to be maturing well, and several cranes have been sighted feeding within this newly constructed area. Features which have worked at this site will also be adopted for future design considerations for the development of a long-term dredged material management plan.

The overall "long-term" solution for the critical habitat area would incorporate the recommendations developed during the Section 216 study process and subsequent monitoring of the demonstration sites discussed above.

STUDY PARTICIPANTS AND COORDINATION

The Galveston District of the U.S. Army Corps of Engineers (USCE) has been responsible for the overall management of the study and report preparation. The Texas Department of Transportation participated actively in the study process as local sponsor. The study has been coordinated with interested Federal, State, and local agencies, and the public. The following are some of the other agencies and groups that provided input during preparation of the report:

Federal Agencies
U.S. Fish and Wildlife Service (USFWS)
Aransas National Wildlife Refuge (ANWR)
National Marine Fisheries Service (NMFS)
U.S. Army Corps of Engineers -
Waterways Experiment Station (WES)

State Agencies
Texas General Land Office (TGLO)
Texas Parks and Wildlife Department (TPWD)
Texas Historical Commission

PRIOR STUDIES AND REPORTS

This section of the GIWW has been extensively studied with respect to erosional impacts to the habitat of the endangered whooping crane. Two studies have been performed to evaluate the changes in habitat as a result of channel construction and maintenance dredging along the GIWW and the lower portion of the Channel to Victoria which are within the critical habitat. The first study was performed by Stehn (1986) and the second in 1987 by Espey, Huston & Associates, Inc. Another study by Ramirez et al., (1988) also discussed habitat changes and erosion, but utilizes the data from Stehn (1986).

In 1988 the Galveston District investigated erosion problems along the reach of the GIWW within the boundary of the ANWR. The purpose of the study was to define the magnitude of the problems, evaluate potential solutions, and determine applicable Federal authorities which may be used to provide erosion control in this area. This study, although somewhat cursory, provided the basis for this Section 216 study through the critical habitat of the whooping crane.

Extensive chemical and biological data have been collected by the Corps of Engineers within and adjacent to the project area. Bioassay and bioaccumulation studies have been performed in the GIWW along the Refuge, in the Channel to Victoria, and in Aransas Bay in connection with maintenance dredging activities. Benthic assessment studies including physical and biological characterizations have been conducted in both Aransas and San Antonio Bays. A limited evaluation was also made of the erosion occurring within the Shoalwater Bay to Welder Point reach of the GIWW.

The Corps of Engineers has also prepared numerous Biological Assessments of Impacts to Endangered or Threatened Species, GIWW reports from 1984 to 1989 covering San Antonio Bay to Aransas Bay, Matagorda Bay to Shoalwater Bay, Channel to Victoria and Channel to Seadrift, across San Antonio Bay, and across Aransas Bay. These reports were also made in connection with on-going maintenance dredging activities.

THE STUDY PROCESS

Upon receipt of funds in November 1988, the Galveston District began a reconnaissance study for the entire 423-mile Texas Section of the GIWW under authority of Section 216 of the 1970 Flood Control Act. The reconnaissance study included three parts:

(1) an initial appraisal of the entire Texas section of the GIWW;
(2) a reconnaissance-level study of the problems in the Sargent Beach area; and
(3) a reconnaissance-level study of problems in the Aransas National Wildlife Refuge (ANWR) area.

The first part of the study identified and prioritized various problems along the waterway for future studies. The reconnaissance-level studies of Sargent Beach and the ANWR area demonstrated the immediate need to proceed with separate feasibility-level studies for each area. The Reconnaissance Report was completed in November 1989.

The feasibility study for the ANWR area was initiated in September 1990 and follows the recommendations presented in the Reconnaissance Report and subsequent guidance received through the Reconnaissance Review Conference, Feasibility Review Conference, other meetings, and memoranda. This report includes detailed analyses of a range of alternatives and their effectiveness in eliminating or significantly lessening the impacts of erosion along the GIWW through the ANWR area. It also includes detailed assessments of environmental, social, and local economic effects of the improvement determined to be most viable from a national economic perspective as derived from the early screening process. Results of this study form the basis for recommending the selected plan for project implementation as well as determining the level of effort for preconstruction design analyses.

This Feasibility Report is presented in two volumes:

Volume 1 - Main Report
Environmental Impact Statement (EIS)
Volume 2 - Appendices
A - Spill Analysis Reports
B - Environmental Documentation
C - Engineering Appendix
D - Real Estate Supplement

The study process provided for a systematic procedure to identify and evaluate alternative plans which addressed study area problems and opportunities. Emphasis in this Feasibility Report is on evaluation of alternatives, assessment of impacts, and selection of a recommended plan.

HISTORY OF THE AREA

HISTORY OF THE WHOOPING CRANE

Although it is now an endangered species, the whooping crane was more abundant in the past and can be identified in the North American fossil record for at least several million years. The historic range extended from the Arctic coast of Canada south to central Mexico and from Utah east to New Jersey, South Carolina, and possibly Georgia and Florida. Its breeding range extended from central Illinois northwestward through northern Iowa, western Minnesota, northern North Dakota, and southern Manitoba, Saskatchewan, and Alberta, Canada. A separate nonmigratory breeding population existed in southwestern Louisiana until recent times. The whooping crane disappeared from the heart of its breeding range in the north-central United States by the 1890's.

By 1870, it was estimated that only 500-700 whooping cranes remained and were rapidly declining. Only two small breeding populations remained by 1937; a sedentary population around White Lake in southwestern Louisiana and a migratory population which wintered on the ANWR and nested in Wood Buffalo National Park, Canada. The remnant Louisiana population was reduced from 13 to 6 birds following a severe storm in August 1940, and the last surviving bird was taken into captivity on March 11, 1950.

The remaining wild population reached its low point in 1941 when only 16 birds were counted at the newly created ANWR. Through careful management and with a great deal of good fortune, these slowly reproducing, but long-lived, birds have struggled to increase their numbers. At the ANWR the population reached a high of 146 birds in the two winter seasons of 1989-1990 and 1990-1991. These numbers have decreased to the total of 133 birds in the ANWR flock in the winter of 1994-1995. By August 1995, there were 133 adults and 25 juveniles at Wood Buffalo National Park, 4 birds at a colony at Grays Lake, Idaho, 24 in an experimental colony in central Florida, and 146 in captivity, bringing the total number of surviving whooping cranes in the world to 332 birds.

Additional information on the history of the whooping crane and the research and management related to the crane is detailed in the EIS.

HISTORY OF THE ARANSAS NATIONAL WILDLIFE REFUGE

The area which is now occupied by the ANWR was occupied, before and at the time of the arrival of the final European settlers, by the Karankawa Indians. These indians gathered roots and nuts, hunted and fished. The first written description of the Blackjack Peninsula (Labuda, 1975) comes from the personal diary of Jean Louis Berlandier in March 1829. His ship ran aground and was stranded for six days in Copano Bay. Berlandier noted the presence of foxes (probably coyotes), wolves, wild horses, a large species of cat, pelicans, and egrets. He described the land area as a vast expanse of grassland with occasional mottes of trees. The first recorded white settlement in the area occurred in 1843 when George A. Brundrett moved into the southeastern part of what is now the ANWR, along Mesquite Bay. Several small farms and ranches were established in Blackjack Peninsula during the 1890's and early 1900's. Two post offices existed within the boundaries of the present ANWR during the years 1890 through 1911.

Most of the ranches on the Blackjack Peninsula were consolidated under Cyrus B. Lucas, a cattleman, around 1918. From 1923 until 1937, control of all of the ranches on Blackjack Peninsula was held by Leroy G. Denman of the San Antonio Loan and Trust Company. Denman introduced, or reintroduced, various species of animals, including some exotics. Most of these did poorly, but white-tailed deer and turkeys, which had once been numerous in the area, and some European wild boars, which interbred with the descendants of hogs which were raised on local ranches in the late 1800's, did well and are common today.

In 1937, Denman sold, for the San Antonio Loan and Trust Company, the entire Blackjack Peninsula to the U.S. Government for establishment of the Aransas Migratory Waterfowl Refuge. The legal authority for the acquisition of the land was the Migratory Bird Conservation Act. In recent years, the Refuge has been expanded to include most portions of Matagorda Island. In 1939 the name was changed to the Aransas National Wildlife Refuge. Including the original purchase from Denman and numerous small purchases, by 1967, the ANWR contained 47,261 acres. In 1967, an additional 7,568 acres of land in the west side of St. Charles Bay was donated to the Refuge, bringing the total to 54,829 acres.

The purpose of the National Wildlife Refuge System, including the ANWR, is to manage migratory birds and their habitats, to ensure optimum diversity, distribution, abundance and use by people. Executive Order 7784 states that the ANWR will be used "...as a refuge and breeding ground for migratory birds and other wildlife..." Conservation efforts have

been successful in that a slow increase in the number of birds has occurred, from a wintering population of 14 adults and 4 juveniles, for a total of 18 birds, in 1938-39 to 58 adults, 11 subadults, and 14 chicks, for a total of 83 birds, in 1984-85. The number of birds increased to 146 birds in 1989-90 and 1990-91 and then decreased to 133 birds in 1994-1995.

The critical habitat boundary for the whooping crane in the Aransas area was published in the Federal Register in May 1978 and became effective in June 1978. A detailed description of the boundary limits as well as the definition of "critical habitat" is contained in the Environmental Impact Statement.

HISTORY OF THE GIWW

Before construction of the GIWW between Matagorda Bay and Aransas Pass, commercial transportation along the mid-Texas coast was limited to railways, which connected only a few towns, or to light-draft steamers and barges. Many small settlements along the bays depended on waterborne transport for exchange of commodities and communication with the towns at railway terminals. This waterborne transport used a series of bays which had 5- to 10-foot depths at Mean Low Tide (MLT) for the most part, but navigation was restricted in many places by sand bars and shell reefs. As early as 1859, a small amount of dredging through these shell reefs was done by the State of Texas or private parties to facilitate navigation, and this route was used as the United States mail route before railway connection was established. By 1905, the original 3-foot depths at MLT had shoaled to less than two feet and waterborne commerce was threatened.

The River and Harbor Act of March 2, 1907 authorized the dredging and maintenance of a 5- by 40-foot channel from Aransas Pass to Matagorda Bay. Dredging of this channel was completed in August 1909. This original channel passed through San Antonio, Mesquite, and Aransas Bays.

After completion of the 5- by 40-foot channel, the town of Port O'Connor was built on the peninsula between Espiritu Santo Bay and Matagorda Bay and supplied with a railroad connection. The channel route was changed by authorization of the River and Harbor Act of July 1912. Dredging was completed in August 1913. The new channel passed through Barroom Bay and across a narrow neck of land near Port O'Connor and into Matagorda Bay superseding the old channel through Big Bayou.

After completion of the realigned channel, commercial traffic increased, but shallow depths and narrow widths of the channel prevented its use as expected. Economical commercial use of barges required a minimum of 4.5- to 5-foot loaded draft and the channel was constantly shoaling. Also, uninterrupted use of the channel during all seasons was not possible because northers during the winter could depress the water level as much as two feet below MLT. Channel dimensions were authorized to be modified to 9 by 100 feet in 1927.

Dredging on the 9- by 100-foot channel between Matagorda Bay and Aransas Pass was completed in July 1940. The new channel followed the same route, except for one section, where it passed through the marsh along the north shore of Shoalwater, San Antonio, and Mesquite Bays. This inland route was chosen for economic reasons. Although it was more expensive to dredge across land rather than open water, the increased cost was more than offset by the increased savings in future maintenance dredging. Open water stretches of channel shoaled much faster than land cuts and, therefore, required more maintenance dredging.

Even before this channel was completed, commercial interests were requesting an enlarged channel because of increased barges in each tow. Also, the population and industrial plants were increasing along the coast due to the expansion in petroleum and related industries (discovery of new oil fields and construction of pipelines and refineries during the 1930's). As a result, commerce was increasing beyond expectations. Therefore, the section of the GIWW from San Antonio Bay to Port Aransas was dredged in 1944 to dimensions of 12 feet deep and 125 feet wide. This channel followed the same route as the 9- by 100-foot channel. In 1941 a concrete spillway and earth dike were built adjacent to the channel in the ANWR.

Since construction of the 12- by 125-foot channel in 1944, the route of the GIWW between Matagorda Bay and Aransas Bay has remained unchanged and maintenance dredging has occurred at regular intervals to maintain authorized dimensions.

The existing reach of the GIWW between the Houston Ship Channel and Corpus Christi, which includes the ANWR area, was authorized in 1927 with dimensions of 9 feet deep by 100-foot bottom width. The channel was aligned inland of the various bay shorelines to provide protection to waterway traffic from wave attack from the bay. Before that time, there were channels along portions of the Texas coast which connected the inland bays and took advantage of existing channels and natural bay depths. These channels were generally 6-foot deep or less. In 1939, the GIWW through this reach was authorized to 12 feet deep by 125-foot bottom width, the same dimensions that exist today. Completion of

the 423-mile Texas section of the GIWW from the Sabine River to Brownsville occurred in 1949.

EXISTING CONDITIONS

This section provides general descriptive information on the area. Climate, physiography, biological resources, land use, population, and the economic base are discussed in the following subsections.

CLIMATE

The ANWR study area is located in the humid zone, one of three climatic regions along the Texas coast. Average annual rainfall is about 36 inches. The temperature ranges from a mean high of 92 degrees Fahrenheit (F) to a mean low of 47 degrees F.

The summer climate is moderated by the cool prevailing southeasterly breezes from the Gulf. Violent thunderstorms are common throughout the spring, summer, and fall months, with the most severe occurring in the summer. Hurricanes and tropical storms occur during the summer and early fall months and may result in high winds, heavy rainfalls, and high storm surges. The average return frequencies of hurricanes along the Texas coast is about once each two and one-half years and about once each ten years for a particular location along the coast. Rainfall generated by thunderstorms, tropical storms, and hurricanes ranges from high intensity, short duration to moderate intensity with long duration.

The mild winters are characterized by Pacific or Canadian high pressure systems moving through the area. The systems, often called cold fronts or northers, cause rapid temperature drops and abnormally low tides as the wind forces the water from the surrounding bays into the Gulf of Mexico.

PHYSIOGRAPHY

This portion of the GIWW lies within the Gulf Prairie and Marshes of the Gulf Coast Plains of Texas. Predominate features of the area include barrier islands and other features formed primarily by riverine and coastal processes beginning in the late Pleistocene and continuing to present. Such features include Matagorda Island, a barrier island; Blackjack Peninsula; Lamar Peninsula (west side of Aransas Bay); San Antonio, Mesquite, Aransas, Copano, and other bays; the Guadalupe and Aransas Rivers; and numerous creeks. These features combine to form a complex ecological system.

AQUATIC RESOURCES

The project area lies within a complex system of bays, coves, islands, rivers, lakes, and passes to the Gulf of Mexico. There are five major bays and eight minor bays in the area. The largest are Copano, Aransas, St. Charles, San Antonio, and Espiritu Santo Bays. The smallest are Carlos, Mesquite, Shoalwater, Hynes, Guadalupe, Mission, Sundown, and Ayers Bays. The bays are generally less than 8 feet deep and vary from turbid to clear, depending on wind and weather. Salinity also varies between bays depending on how many and how large the rivers and creeks are that empty into them. Regardless, all the bays can experience virtually freshwater conditions during floods to hypersaline conditions during droughts. Temperature also varies from freezing during the occasional "blue norther" to very hot during the baking summer months. Thus, the plants and animals inhabiting this ecosystem must be tolerant of extreme changes or be able to move out when conditions are intolerable. For this reason, diversity is higher when measured over a period of years compared to daily diversity. Environmental variability can also lead to mass mortality among sessile organisms, such as oysters, when conditions deteriorate beyond their limits.

Despite the occasional to frequent periods of high turbidity, most of the bays have a fringe of seagrasses along the shoreline that varies from 30 to 200 meters wide and a density of a few blades per square meter to several hundred or more. There are at least five species of seagrasses in the system, the most common being shoalgrass, followed by wigeongrass and turtlegrass. These grass beds along with the intertidal marshes fringing the bays are important as nursery areas for the many fish and invertebrates inhabiting the bays and also provide food and shelter for many juvenile organisms.

Oysters are abundant in many bays and are important to the ecosystem since they form a distinct habitat used by many marine organisms. Oysters also are a major component of the commercial fishery in the area, second only to the shrimp industry.

There are more than 60 common and abundant species of fish in the bays ranging from the small forage and bait fish, such as killifish, mullet, pinfish, pigfish, menhaden, anchovy, silversides, silver perch, silver jenny, shad, puffer, and sea catfish to the larger and recreationally important species, such as speckled trout, sand trout, redfish, black drum, southern flounder, sheepshead, croaker, and spot. In addition to the fish, there are many invertebrate species that form important links in the food chain, some of which are also commercially valuable (e.g., white shrimp, brown shrimp, and blue crab). Other invertebrates include fiddler crabs, mud shrimp, marine worms, clams, amphipods, and

isopods. There are also many species of freshwater fish and invertebrates in the many fresh- to brackish-water ponds, lakes, creeks, and rivers in the area.

Because there is such a diverse assemblage of aquatic species in the area, especially at Welder Flats, about 1,400 acres of the approximately 1,700 acres that make up the subtidal wetlands of Welder Flats have been designated as a coastal preserve by Texas Parks and Wildlife Department (TPWD) and Texas General Land Office (TGLO) in 1988. These two State resource agencies have established a cooperative program to manage the sensitive and productive estuarine habitat in several estuarine areas along the Texas coast from South Bay near Port Isabel to Armand Bayou near Houston. Under the Coastal Preserve Program, State-owned submerged coastal lands controlled by TGLO are leased to TPWD to manage and protect the preserve's fish and wildlife resources. The Welder Flats Coastal Preserve was one of the first two areas selected (South Bay was the other), primarily because of its extremely high estuarine habitat quality and its increasing use as a wintering area by the endangered whooping crane. The emergent lands adjacent to the preserve are privately owned, but the landowner (the Cliburn Ranch) supports the preserve and works closely with the TPWD to protect the resources in the area.

TERRESTRIAL RESOURCES

Lamar Peninsula, Blackjack Peninsula (ANWR), and Welder Flats, which comprise the project area, are variously classified biogeographically as Gulf Prairies and Marshes vegetational area or Coastal Prairie Region. The land is generally low and flat with only four creeks of any consequence draining the two peninsulas. On Lamar Peninsula, there are Willow, Salt, and Cavasso Creeks that empty into St. Charles Bay. On Blackjack Peninsula, there is only Bergentine Creek which also empties into St. Charles Bay. Additionally, there are several man-made ditches and canals draining the extensive agricultural fields north of Blackjack Peninsula which empty into Bergentine Creek. These minor drainages transport sporadic, massive run-off from heavy rains and contain agricultural chemicals, such as herbicides, pesticides, and fertilizers. The major industry in the area is agriculture and ranching with some oil and gas drilling and production activity scattered throughout. The areas not under cultivation are generally managed for cattle grazing or selective wildlife enhancement (ANWR). Thus, the land is continually disturbed by overgrazing, clearing, mowing, or burning.

The ANWR and surrounding area can be subdivided into three vegetation zones and up to 12 plant communities based on soil type, salinity, elevation, and floral composition. Briefly, these zones and the communities they contain are listed below.

GULF PRAIRIE

The Gulf Prairie zone is characterized by clay to clay-loam soils, often quite saline and found in the Tatton Unit and Bergentine Lake area. Plant communities commonly found in this zone include from lowest to highest elevation: The tidal flat community (sea ox-eye daisy, glasswort, saltgrass, smooth cordgrass), cordgrass community (Gulf cordgrass, groundsel tree, and mesquite), upland grassland community (many species of bluestems and other grasses), mesquite - prickly pear community (mesquite, Texas prickly pear), and chaparral community (mesquite, lime prickly ash, and other xerophytic legumes and buckthorns).

GULF SANDS

The Gulf Sands zone consists of low to high salinity sands which make up almost all of Blackjack Peninsula and most of Lamar Peninsula. Plant communities in this zone include: The shell ridge community (live oak, yaupon, spanish dagger, Gulf and marshhay cordgrass), oak - bay forest community (laurel oak, red bay, live oak), freshwater community (pondweeds, water milfoil, bulrushes and cattails), ridge-and-swale community (live oak mottes and thickets, many species of grasses, marsh elder, ragweeds, sunflowers), and tidal shore grassland community (marshhay and Gulf cordgrass, saltgrass, seashore paspalum, sumpweed, and bluestems).

SALTMARSH

These highly saline, permanently saturated sand to clay soils are found all around the margins of the bays and rarely exceed one foot in elevation. It is most extensive in the Welder Flats area. Plant communities are not well developed here due to high salinity, but may include: The tidal flat community, saltmarsh community (smooth cordgrass, black needle rush, and saltmarsh bulrush), brackish pool community (virtually denuded soils with only a few salt-tolerant plants of the tidal flat community), and chapparal community (on shell ridges and some disposal islands).

Of the 12 communities listed above, the ridge-and-swale community is the most extensive, covering about 50,000 acres on Lamar and Blackjack Peninsulas. Grasslands dominate this community and include over 100 species of grasses. However, since man has started

modifying the ecology of the area, the grasslands have been gradually invaded by dense live oak thickets. The other plant communities in the area are much smaller and generally occur in scattered fragments interspersed throughout the grasslands. Welder Flats, however, is dominated by the brackish pool community and covers about 7,000 acres. This area is noted for its lack of vegetation, large areas of sand and mud flats, and an extensive system of interconnected shallow pools. The upland area north of the flats is generally coastal prairie and heavily grazed by cattle. It also has several producing oil and gas wells.

WILDLIFE RESOURCES

Animals in the project area are equally as diverse as the plants. The area is well known for its popular and abundant game animals, such as white-tail deer, javelina, feral hog, turkey, quail, dove, and squirrel. Equally important to the ecosystem are the other animals found there in abundance, such as opossum, shrews, moles, bats, mice, rats, gopher, rabbits, armadillo, raccoon, skunk, and their predators such as coyote, fox, and bobcat.

The area is also well known for its diverse and abundant birds and is a favorite spot for amateur birdwatchers to gather, especially during the fall and spring migration periods. Over 350 species of birds have been identified in the area, such as the endangered whooping crane, prairie chicken, and brown pelican. There are also at least 15 species of ducks, 4 species of geese, and 9 species of rails in the area plus an abundance of other waterfowl, such as grebe, loon, herons, egrets, ibis, storks, roseate spoonbill, gulls, terns, and black skimmer. Shorebirds are numerous along the beaches, marshes, and sand flats and include plovers, willet, avocet, sandpipers, sanderling, dowitcher, stilts, and curlews. Farther inland among the trees and the grasslands are the many different passerines, raptors and other birds. These include warblers, swifts, swallows, hummingbirds, woodpeckers, grackles, meadowlarks, wrens, sparrows, hawks, owls, falcons, osprey, eagles, and vultures to name only a few.

Less abundant in the area, but equally interesting, are the reptiles and amphibians, such as the formerly threatened alligator, 8 species of turtles, 3 species of sea turtles, 9 species of lizards, and 32 species of snakes. Amphibians are not as diverse as reptiles in the area, but there are 3 species of salamanders, 8 species of frogs, and 6 species of toads.

CRANE USAGE OF HABITAT TYPES

The mainland portion of the ANWR contains approximately 7,000 acres of marsh with the remainder of the 54,829 acres being brush, oak savannah, and grasslands. Another 43,874 acres of the ANWR are located on Matagorda Island and are managed by the Texas Parks and Wildlife Department.

The critical habitat of the whooping crane, as designated under the Endangered Species Act in 1978, encompasses the ANWR and is itself entirely within the study area. For approximately six months of each year (mid-October through mid-April or later) whooping cranes utilize portions of the ANWR as well as off Refuge sites for their principal wintering grounds. The 1986 Whooping Crane Recovery Plan provides a "summary of the whooping crane's history, biology, present status and the factors that are believed to have resulted in its endangered status." Also included in the report are in-depth analyses of management efforts, recovery objectives for the species and a time schedule for implementation of the Plan. The 1986 Whooping Crane Recovery Plan specifies sufficient winter habitat must be available to support 40 nesting whooping crane pairs for 10 consecutive years by the year 2020. This criterion has not yet been met. Although in 1993 45 nesting pairs were recorded in Wood Buffalo National Park, only 28 nesting pairs of whooping cranes were recorded in 1994. Weekly aerial census data of paired adult whooping cranes were taken by Refuge personnel in the winters of 1950-51, 1961-62, 1971-72, and 1978-86, to determine the location of winter territories. The Aransas flock, with 118 individuals recorded in the 1984-85 survey and 128 individuals recorded in 1985-86, reached a peak of 146 individuals for the 1990-91 winter.

Whooping cranes feed on vegetation such as plant tubers, insects, amphibians, reptiles, small mammals, grains, acorns, fish, marine worms, crustaceans and mollusks. Blue crabs, mud shrimp, and several species of clams are primary food items in the tidal flats adjacent to the GIWW. The whooping cranes will take advantage of seasonal fruits, such as wolfberries and acorns, in the upland areas. The cranes are rarely seen feeding in water depths greater than 2 feet.

There has been little quantification of habitat type as utilized by whooping cranes. However, of the habitats discussed, low marsh, tidal pool, shallow water, and submerged vegetation areas receive the majority of whooping crane use. High marsh and tidal flat areas receive somewhat less usage and upland brush, upland grassland and land-locked ponds receive an even lower percentage of use. Deep water, upland woodland, reef, and disturbed areas receive no use or practically none.

Although the number of established territories on the east shore of the ANWR has increased, average territory size in this area has decreased. With the aid of the whooping crane banding program initiated in 1977 and radio tracking of the cranes which began in 1981, it has been observed that the whooping cranes tend to return to an area adjacent to the one where they first wintered.

Estuarine marshes on the Blackjack Peninsula, from Live Oak Point to Bird Point are documented areas of the heaviest use, although since 1970-71, habitat use has expanded to the western shore of Blackjack Peninsula, the eastern shore of Lamar Peninsula, and salt marshes on Welder Point.

The ANWR and surrounding area lies on the Texas coastal bend, an area of transition between the wetter, cooler northern Coastal Prairie with more luxuriant vegetation and the drier, hotter southern Coastal Prairie with sparse vegetation and higher wind erosion. Because it is in a transition zone where many of the resident species live at the limits of their range and several complementary species have overlapping ranges, the area has a higher species diversity than either the northern or southern Coastal Prairie. Species diversity is further enhanced by the fact that the area lies in the central flyway, so it is also a temporary refuge for many migratory birds. Man has also influenced species diversity in the region by introducing exotic species and by altering the local ecology through widespread agriculture (cultivation, pesticides, herbicides) and bay modification (dredging and disposal, shrimp trawling, erosion).

THREATENED AND ENDANGERED SPECIES

There are 20 federally-listed threatened and endangered species that may be found in the study area. Candidate species or species on State lists are not accorded protection under the Endangered Species Act. Species on the Federal list for the study area are shown in Table 1. Another 22 candidate species and 1 unknown category species of plants and animals that may be listed in the future could occur in this area and are discussed in the EIS.

The whooping crane is, perhaps, the flagship of the endangered species and has caught the public's eye and imagination with its remarkable recovery from its low of only 16 birds in 1941 to its present number of 133 birds in the Aransas flock. These migrating birds winter in the Aransas area between October 15 and April 15 generally, where they estab-

TABLE 1

LIST OF THREATENED AND ENDANGERED SPECIES

Common Name	Scientific Name	Status*
Fin whale	Balaenoptera physalus	E
Humpback whale	Megaptera novaeangliae	E
Right whale	Eubalaena glacialis	E
Sei whale	Balaenoptera borealis	E
Sperm whale	Physeter macrocephalus	E
Green sea turtle	Chelonia mydas	T
Hawksbill sea turtle	Eretmochelys imbricata	E
Kemp's ridley sea turtle	Lepidochelys kempi	E
Leatherback sea turtle	Dermochelys coriacea	E
Loggerhead sea turtle	Caretta caretta	T
Whooping crane	Grus americana	E
American peregrine falcon	Falco peregrinus anatum	E
Arctic peregrine falcon	Falco peregrinus tundrius	T
Attwater's greater prairie chicken	Tympanuchus cupido attwateri	E
Bald eagle	Haliaeetus leucocephalus	E
Brown pelican	Pelecanus occidentalis	E
Piping plover	Charadrius melodus	T
Jaguarundi	Felis yagouaroundi	E
Ocelot	Felis pardalis	E
Black lace cactus	Echinocereus reichenbachii var. albertii	E

* E = Endangered species
T = Threatened species

lish territories and feed in ponds, shallow bays, and marshes. They return to their nesting grounds in Wood Buffalo National Park in northern Canada in the spring.

Attwater's prairie chicken is a grouse that is presently limited to a few coastal counties in Texas where its optimum habitat of short- to tall-grass prairies exist. The population is experiencing a rapid decline due primarily to a loss of habitat (agriculture, urban development, and overgrazing) and unfavorable weather conditions (heavy spring rains during nesting season). Only about six birds have been sighted in 1989 on the ANWR in the Tatton Unit. The largest remaining population in the state is located about 5 to 10 miles north of the ANWR on the Roger Williams Ranch.

The Arctic peregrine falcon does not nest in Texas, but migrates along the coastline during the fall and spring. The falcon prefers the open sand and mud flats along the coast where there is little cover for their prey (waterfowl, passerines, wading birds) to hide in. South Padre Island is an important stopover point for the birds, but they do frequent the barrier islands offshore of ANWR and also the Welder Flats area. The mainland in the project area is not suitable peregrine habitat, although the birds can be seen there on occasion.

The bald eagle is occasionally seen in the Aransas area, but it no longer nests there. It will feed in the bays, rivers, and lakes, but it is not a permanent resident and will migrate elsewhere.

The piping plover is a migrant that overwinters along the Texas coast from fall through spring. Its optimum habitat is moist sand along beaches and sand flats near the coast, and does not appear to stray inland much. The majority of birds now winter along North and South Padre Island and at Bolivar Flats in Texas.

The brown pelican virtually disappeared from the Texas coast in the 1950's and 1960's, but it has recently been expanding its population north along the coast up to Galveston Bay. The major nesting colony is located on Brown Pelican Island in Corpus Christi Bay about 15 to 20 miles south, but small populations have nested occasionally on the Second Chain of Islands and Long Reef very near the project area and on Sundown Island to the north in Matagorda Bay. The bird feeds along the surf in the Gulf of Mexico and in the bays of the area.

Three of the five sea turtle species found in the Gulf of Mexico may occasionally wander through the area and feed over the grass beds and oyster reefs. The loggerhead, green, and Kemp's ridley have not been recorded nesting in the area in recent history, although

the green sea turtle was once abundant in the area and probably nested there before being hunted to near-extinction.

The ocelot and jaguarundi are small cats that prefer the dense, thorny brushland of south Texas where they still can be found in limited numbers. Although they have been reported occasionally at the ANWR which has some of the requisite habitat, these sightings have not been verified and local experts doubt that these cats occur this far north.

HISTORIC RESOURCES

The ANWR area has been utilized by man for at least 10,000 years. Only artifacts from this earliest period have been recovered, but more recent aboriginal site remains attest to the use of this biologically diverse area by prehistoric peoples for hunting, fishing, and gathering. Extensive seasonal camp sites have been found within the project area. Historic contact with this portion of the Texas coast occurred in the 16th century by Spanish explorers. No historic settlement is known to have occurred in the project area, although important early settlements were established both to the east and west on protected bays. Open range ranching was the primary use of the land during the historic period. Commercial shipping along the barrier islands was underway by the early 19th century, with the original "Old Intracoastal Canal" dredged between 1873-1875. This original route lay generally to the south of the modern GIWW in more open waters.

Nine previously recorded prehistoric archeological sites are located within the study area, primarily on the mainland portions on higher ground. Extensive archival research on early historic sites and shipwrecks has identified a 19th century structure on or near Bludworth Island and 9 shipwrecks of undetermined age in the general project area. Specific locations have not been verified for these wrecks.

HAZARDOUS AND TOXIC WASTE CONSIDERATIONS

An assessment of the study area was conducted to determine the existence of, and potential for discovering, Hazardous, Toxic and Radioactive Waste (HTRW) sites. HTRW sites pose a risk to public health and the environment, could affect, or be affected by the project activities, and have the potential for causing project delays and escalating project costs. As such, HTRW sites are identified and managed early in the study.

Assessment finding indicate that there are no HTRW sites within the study area. Records from the Railroad Commission of Texas indicate a total of 24 oil and gas wells in the study area, two of which are active gas wells. There are 12 pipeline crossings within the study area.

POPULATION

The study area includes Aransas and Calhoun Counties. Together these counties cover 764 square miles of land area and had a 1990 combined population estimated to be 36,945 persons. The 1990 census of Aransas and Calhoun Counties were 17,892 and 19,053, respectively. For Aransas County there was a population growth of 3,632 persons, or a 25.5 percent increase over the 1980 census. For Calhoun County there was a decrease of 2.7 percent or 521 persons from the 1980 census. Aransas County is essentially rural with population concentrations in Rockport and Aransas Pass. Calhoun County is also rural with Port Lavaca, Seadrift, and Port O'Connor as the major population concentrations. The semi-rural character of the study area is evidenced by its 1990 population density of 48 persons per square mile, less than the state density of 65 persons per square mile. The critical habitat of the whooping crane is essentially undeveloped.

ECONOMIC BASE

The economies of the two counties in the study area are based primarily in agricultural production, petroleum production, petrochemical processing, manufacturing, commercial fishing, and tourism. The combined salaries of Aransas and Calhoun Counties derived from agricultural production exceeded $400,000 in 1990. The leading crops are rice, grain sorghum, soybeans, cotton, and corn. Tourism, one of the main industries in the region, generated an income of over $60.9 million in 1992. A majority of this revenue was generated through water-based activities.

In addition to tourism, the two-county area is served by an extensive water transportation network. This consists of the shallow draft channels of the GIWW, the Channel to Victoria, and the Channel to Port Lavaca; and the deep draft Matagorda Ship Channel terminating at Point Comfort. These ports handle ores, chemicals, sand and gravel, petroleum products, offshore supply boats, and commercial fishing vessels.

Total employment for the study area and the State increased modestly in 1990 compared with 1980. The employment declines were attributed to the overall economic slumps in the oil and gas industries. The civilian labor force within the study area numbered over 14,500 workers in 1990 with an average unemployment rate of 8.0 percent, which exceeded the State average of 7.1 percent for the same period.

SOCIOECONOMIC VALUES

The natural resources of the Aransas area afford a variety of opportunities beyond the traditional economic activities that are most often identified for a given region. The activities of recreational fishing, bird watching, hunting, nature studies, boating, sailing, water sports, camping, sight-seeing, photography, and numerous others are enjoyed by thousands of people annually. Many of these activities are not normally quantified and in many cases not readily quantified. However, there are methods that can be employed whereby the value of these, oftentimes, more passive pursuits, can be estimated. It is recognized that other social values beyond actual trip expenditures or "willingness to pay" indicators, are realized by the participants.

Other values are derived from the resources of the area by people who may never see or actually visit the area. The knowledge of the existence of a productively functioning system through photographs, literature, documentaries, videos, etc. encourages protection of other ecosystems through involvement in conservation activities within the immediate area of residence. It may also encourage people to contribute monetarily to activities which help to protect, enhance, or restore habitat resources and to protect endangered and threatened species for future generations. Therefore, these activities have value to people beyond actual use value, and consequently promote a higher quality of life.

The value of the Aransas area as an economic resource to the area is significant. This not only includes the significant segment of the population that depends directly on the resources for their livelihood, but also the economic infrastructure that has developed to support the various activities that form the economic infrastructure of the study area. This includes the many thousands of visitors which are attracted to the Aransas area annually. A major attraction are the vessels which transport tourists to see the whooping cranes in the ANWR during the October-April time frame. These individuals contribute to the local economy through expenditures for tourist-related and other activities which supply additional local revenues through State and local taxes.

PROBLEM IDENTIFICATION

PROBLEMS, NEEDS, AND OPPORTUNITIES

The existing alignment of the GIWW passes along the southern boundary of the ANWR and virtually bisects the whooping crane critical habitat. The main concerns associated with the waterway are erosion along the channel banks and the routine dredging and dredged material disposal practices associated with maintaining the channel to authorized dimensions. These concerns have been the subject of a number of scoping and coordination meetings with resource agencies and the general public throughout this study.

The erosion of the channel banks is caused by vessel traffic and to some extent, natural processes from wind waves and currents. Concerns associated with dredging and disposal practices have been raised over possible adverse impacts to aquatic resources caused by the dredging operation and resuspension of contaminants from maintenance material. Because of this concern, confined disposal areas have been used throughout the landlocked portions of this reach over the past several years. However, land losses have continued as a result of bank erosion and confining the dredged material on islands adjacent to the GIWW.

These concerns have been addressed through both the reconnaissance and feasibility phases. Several opportunities in the form of alternative channel alignments, the beneficial uses of dredged materials, and a long-term dredged material disposal strategy have been considered during the course of this study.

The causes of the erosion problems in this area are discussed in the following paragraphs as well as efforts that have been implemented to reduce critical habitat losses while this study process is continuing.

CAUSES OF EROSION

Natural causes of erosion include sea level rise, currents, natural compaction, and wind waves. Man-induced causes include land subsidence, boat-induced wakes, and concentration of wave energy.

In some respects, the effects of sea level rise in bays and estuaries are not as dramatic as those along the open coast where an overall beach-face profile adjustment is made with respect to a relatively higher water level. However, land areas with low elevations and gradual slopes can be affected significantly by slight increases in relative water surface

elevations causing a loss in emergent land areas as the "normal" shoreline moves inland over time. Since the change in water surface elevation is relatively slow along the Texas coast, the sea level rise factor may often be overlooked in the short term. However, a relative sea level rise has been documented along several areas of the Texas coast, but most of the change has been attributed to compactional subsidence. Long-term records interpreted by several researchers have determined that the relative sea level rise ranges from .013 to .020 feet per year or 1.3 to 2.0 feet per century. The National Research Council in their publication, "Responding to Changes in Sea Level: Engineering Implications," shows the extreme projection (Curve III) to be on the order of 0.6 meters or about 2.0 feet during the next 50 years.

The removal of natural resources, such as gas, oil, and groundwater underlying the coastal zone, may cause subsidence of the land surface. This has the same local effect as a sea level rise. Oil and natural gas drilling and production activities are occurring within the critical habitat boundaries, but are not causing any apparent localized subsidence impacts. The main reason for the lack of subsidence in the area is the type of underground structure that these liquids and gases are removed from, namely rock, which does not normally cause widespread subsidence effects. There is no significant extraction of groundwater within the surrounding counties which could cause subsidence impacts to the critical habitat area.

The entire Texas coastal area has been affected by compactional subsidence caused by the sediment load over a large geographic area extending along the Texas coast and into Louisiana. This area is referred to as the Gulf Coast Geo-syncline. An assessment of the specific amount of compactional subsidence and the various contributory factors discussed above has not been made. However, the combined amounts of the various factors causing changes in this area considered to be on the order of about 1 foot per century.

The amount of erosion caused by vessel wakes is related to the shoreline profile steepness, shoreline soil conditions and plant coverage, and the speed, size, hull shape, and draft of the vessel, as well as the number of vessel trips per year. A complicated combination of forces affect the shoreline as a large vessel, such as a loaded tow, passes a given location. The first of these is the initial force of the water as the bow moves forward sending a "slug" of water into the bank. Then a drawdown occurs as the middle of the vessel passes a particular point causing a pulling or suction force away from the bank. As the vessel passes, the bank is then affected by the vessel wake caused by the displacement and speed of the vessel. Depending on the type of soil forming the shoreline (sand, rock, stiff clay, or soft sediments), the wave action can cause sediments to be

suspended in the water, and the sucking action can draw the sediments away from the bank and into the channel.

Most of the existing channel shoreline is protected from wind-generated, long-fetched waves by island barriers. However, there are several areas which are exposed to waves generated over a considerable expanse of water. These areas have an east or southeast exposure. However, one ameliorating factor that reduces the severity of wave erosion in some of these areas is that opposite some of the exposed areas are shallow bars or reefs which cause waves to shoal and break before reaching the shore. Winds occur from the south/southeast approximately 59 percent of the time in the spring/summer and 33 percent of the time in the fall/winter. Therefore, areas with south and southeast exposure to wave attack experience erosive conditions about half the time on an annual basis.

Because of the northeast-southwest alignment of the channel, wind-generated waves moving across the GIWW from the prevailing southeast direction would directly strike the northern bank of the GIWW while the southern bank is protected from such waves. The winds from the northwest, which would affect the southern shoreline, only occur about 5 percent of the time. These short-fetched, wind-driven waves generated in the GIWW could be slowly adding to the erosion of the north bank which would account for the difference of rates between the north and south banks.

Similarly, these short-fetched waves generated in the GIWW from the predominant direction would enhance vessel wakes traveling toward the northern bank adding to the northern bank erosion rate, while damping the vessel waves moving toward the southern bank. The orientation of the channel with respect to the predominant wind direction may also develop a low-velocity current in the channel which may account for the absence or low volume of shoaled material in several reaches, even those opposite eroding channel banks.

CORPS OF ENGINEERS' EFFORTS TO CONTROL EROSION

During formal consultation with the USFWS over the loss of whooping crane critical habitat resulting from operation and maintenance of the GIWW in the Aransas area, the Corps agreed to armor sections of channel banks where it was most critically needed each summer under O&M authority until this study was completed and construction was authorized. This action would avoid a jeopardy opinion and allow continued use of the waterway. The areas in greatest need of protection would be identified by Refuge personnel one year in advance of construction each summer.

In the summers of 1992 through 1995, the Galveston District placed erosion protection along the existing channel within the Refuge using O&M funding. This erosion protection consisted of laying articulated concrete mats on emergent channel banks along the north side of the GIWW. These mats are composed of individual concrete blocks linked together with cables with the blocks free to move in both horizontal directions, allowing them to be placed over irregular land features.

Areas to be protected during the summers of 1996 and 1997 have not been identified, but are assumed to cover about 2,000 feet of bank each. Costs for each contract are given in Table 2. The costs for 1996-1997 have been estimated based on 2,000 feet of mat at an average cost per linear foot determined from all bids submitted for the 1994 work.

TABLE 2

LENGTH (FEET) AND COST OF CELLULAR CONCRETE MATTRESS CONSTRUCTED ALONG THE GIWW INSIDE WHOOPING CRANE CRITICAL HABITAT BY O&M

Year	Construction Completed by O&M	Mat to be Constructed by O&M	Construction Cost *
1992	1,968	-	$307,000
1993	7,000	-	$920,000
1994	6,967	-	$841,000
1995	1,750 (Approx.)	-	$265,000
1996	-	2,000	$256,000**
1997	-	2,000	$256,000**
TOTAL	17,685	4,000	$2,845,000

* Construction costs do not include Engineering & Design costs.

** Costs for 1996-1997 are estimated by using the average cost per linear foot of construction for the bids submitted for the 1994 work. Bids for 1995 work were comparable to the 1994 bids.

During the first construction contract, beginning in July 1992, a total length of 1,968 feet of concrete mats were placed from Stations 809+432 to 811+400. This area protected the reach of marsh across from the east end of Bludworth Island. The second contract began in May 1993 and included the stations shown in Table 3. This table includes a description of the location where the mats were placed and corresponding lengths of the erosion protection. Table 4 shows the stations for the third contract, which began in April 1994.

FORMULATION OBJECTIVES, CONSTRAINTS, AND CRITERIA

NATIONAL OBJECTIVES

The fundamental national objective of Federal participation in water resources development projects is to assure that an optimum contribution is made to the welfare of all people. The Water Resources Council's Economic and Environmental Principles and Guidelines for Water and Related Land Resources Implementation Studies dated March 1983 and the National Environmental Policy Act of 1969 (NEPA) provide the basis for Federal policy for planning Federal water resources projects. These authorities have established the procedures for formulation and evaluation of water resources projects. Additional policies and regulations, derived from executive and legislative authority, further define the criteria for assessment of plan impacts, risk analysis, review and coordination procedures, and project implementation.

Current Federal policy dictates that National Economic Development (NED) is the primary national objective in water resources planning. NED objectives stress increasing the value of the Nation's output of goods and services and improving economic efficiency on a national level. Planning objectives designed to improve national economic development are concerned with the value of increased output of goods and services resulting from external economics associated with a plan.

The Federal objective of water and related land resources planning is to contribute to national economic development in a manner that is consistent with protecting the Nation's environment. Consequently, the resource's condition should be more desirable with the selected plan than under the without-project condition.

National objectives are designed to assure systematic interdisciplinary planning, assessment, and evaluation of plans addressing natural, cultural, and environmental concerns which will be responsive to Federal laws and regulations. For this study, an NED plan was established as prescribed by guidance as well as taking into consideration the provisions of the Endangered Species Act as it applies to loss of critical habitat of the whooping crane.

PLANNING OBJECTIVES

The study has been guided by objectives which reflect the national goals of improving national economic development as well as being responsive to Federal laws and regulations. Other objectives include the consideration of environmental quality, the improvement of social well-being of the area, and increasing regional economic development, as appropriate. More specifically, plans developed in this study should:

a. Contribute to continued safe and efficient movement of commodities through and along the central portion of the Texas coast;

b. Contribute to the overall economic well-being of the area; and

c. Contribute to environmental quality by maintaining, protecting, preserving, or improving the critical habitat of the whooping crane as well as other fish and wildlife habitat.

PLANNING CONSTRAINTS

Plans must be formulated with regard to adding the problems and needs of the area, taking into consideration future without-project conditions. The plans should identify tangible and intangible benefits and costs from economic, environmental, social, and regional perspectives. Institutional implementation constraints should also be identified. The formulation framework requires the systematic preparation and evaluation of alternative solutions to the recognized water resource-related problems within the study area. The process also requires that impacts of the proposed action be measured and results displayed or accounted for in terms of contributions to: NED, Environmental Quality, Regional Economic Development, and Other Social Effects.

Interaction with other interests must be maintained throughout the planning process to avoid duplication of effort, minimize conflicts, obtain consistency, and assure completeness. The following constraints apply to this feasibility study:

a. Fish and Wildlife habitat affected by a project plan should be preserved, if possible;

b. The study process and plans developed must comply with Federal laws and policies; and

c. Alternative plans which resolve problems in one area should not create or amplify problems in other areas.

FORMULATION AND EVALUATION CRITERIA

Current guidance specifies that the Federal objective of planning is to contribute to national economic development consistent with protecting the Nation's environment. The following general criteria are applicable to all water resource studies. They have generally guided the formulation of this study. Technical, economic, environmental, and social criteria have been established to guide the project development process. These criteria are discussed in the following paragraphs

TECHNICAL CRITERIA

Technical criteria require the preservation of adequate project dimensions to provide safe passage of commercial navigation traffic through this reach of the waterway while eliminating or lessening the impacts of boat traffic on the critical habitat of the whooping crane. These criteria require plans to be compatible with navigation needs and consistent with the requirements of the navigational equipment using this portion of the waterway and to provide a long term plan for the placement of dredged materials in order to continue maintenance of the waterway in the future. These plans must be consistent with specific environmental conditions of the area including soil conditions, topography, and terrestrial and aquatic ecosystems. Formulation of alternative alignments, bank protection methods, and dredged material disposal alternatives and their evaluation was accomplished by analysis of historical and projected shoaling rates, erosion causes and rates, and general structural and non-structural alternatives applicable for conditions which are specific to this area. Technical information used during this study were wave information, aerial photography, historical dredging records, and previously published scientific reports related to this area.

ECONOMIC CRITERIA

The economic criteria require that tangible benefits attributable to projects exceed project costs. Project benefits and costs are reduced to average annual equivalent values and related in a ratio of benefits to costs. This ratio must exceed unity to meet the NED objective. Selected plans, whether structural, nonstructural, or a combination of both, should maximize excess benefits over costs; however, unquantifiable features must be

addressed subjectively. These criteria are used to develop plans which achieve the objective of NED and provide a base condition for consideration of economically unquantifiable factors which may impact on project proposals.

All structural and nonstructural measures for navigation projects should be evaluated using the appropriate period of analysis and the currently applicable interest rate. Total annual costs should include amounts for operation, maintenance, and major replacements, as well as amortization and interest on the investment.

For this study, the above criteria are applicable, but it should also be recognized that since there are damages occurring to critical habitat of an endangered species, the costs of providing the necessary protection is offset by the benefits to the endangered species as described in the Endangered Species Act of 1973. In other words, the benefits, which are unquantifiable by definition since an endangered species is involved, would equal the costs for providing the protection. However, the NED provision must also be satisfied. The economic discussion below is used to show only that continued maintenance of the GIWW with habitat protection measures is economically justified and yields greater net benefits than alternate modes of transportation. This analysis is not intended to be the sole justification for the recommended plan as this is based solely on protection of designated critical habitat as required during formal consultation under Section 7 of the Endangered Species Act.

ENVIRONMENTAL CRITERIA

The general environmental criteria for navigation projects are identified in Federal environmental statutes, executive orders, and planning guidelines. It is the national policy that fish and wildlife resource conservation be given equal consideration with other study purposes in the formulation and evaluation of alternative plans. The basic guidance during planning studies is to assure that care is taken to preserve and protect significant ecological, aesthetic, and cultural values, and to conserve natural resources. These efforts also should provide the means to maintain and restore, as applicable, the desirable qualities of the human and natural environment. Alternative plans formulated to improve navigation should avoid damaging the environment to the extent practicable and contain measures to minimize or mitigate unavoidable environmental damages. Particular emphasis will be placed on the following:

a. Protection, preservation, and improvement of the existing fish and wildlife resources along with the protection and preservation of estuarine and wetland habitats and water quality;

b. Consideration in the project design of the least disruptive construction techniques and methods;

c. Mitigation for project-related unavoidable impacts by minimizing, rectifying, reducing or eliminating, compensating, replacing, or substituting resources;

d. Protection and preservation of endangered and/or threatened species; and

e. Preservation of significant historical and archeological resources through avoidance of effects. This is the preferable action to any other form of mitigation since these are finite, non-renewable resources.

SOCIAL AND OTHER CRITERIA

Plans proposed for implementation should have an overall favorable impact on the social well-being of affected interests, and have overall public acceptance. Structural and nonstructural alternatives must reflect close coordination with interested Federal and State agencies and the affected public. The effects of these measures on the environment must be carefully identified and compared with technical, economic, and social considerations and evaluated in light of public input.

PLAN FORMULATION RATIONALE

The rationale for formulating and developing alternative solutions is discussed in the following paragraphs. The planning framework requires the systematic preparation and evaluation of alternative ways of addressing problems, needs, concerns, and opportunities while considering environmental factors.

The criteria and broad planning objectives previously identified form the basis for subsequent plan formulation, screening, and ultimately plan selection.

The planning process for this study has been driven by the overall objective of developing a comprehensive plan that would eliminate or lessen impacts to the critical habitat from bank erosion along the GIWW. Secondary objectives have been to address other related water resources problems in the study area. The first phase of this process was to establish the magnitude and extent of the problems and then to develop and evaluate an array of alternative solutions to meet the existing and long-range future needs of the area.

TABLE 3

1993 EROSION PROTECTION

STATIONS	LOCATION	LENGTH (Ft)
775+672 - 777+148	Marsh across from east end of False Live Oak Point	1,476
817+570 - 818+710	Marsh at west end of Sundown Bay	1,140
820+250 - 822+725	Marsh between Sundown and Dunham Bay	2,475
822+803 - 822+854	Marsh between Sundown and Dunham Bay	51
823+413 - 823+924	Marsh east of Dunham Bay	511
826+193 - 826+355	Marsh across from Bludworth Island	162
826+469 - 826+551	Marsh across from Bludworth Island	82
826+685 - 827+128	Marsh across from Bludworth Island	443
827+390 - 828+050	Marsh across from Bludworth Island	660
	TOTAL	7,000

TABLE 4

1994 EROSION PROTECTION

STATIONS	LOCATION	LENGTH (Ft)
811+460 - 812+482	Marsh across from east end of Bludworth Island	1,022
813+567 - 815+205	Marsh across from east end of Bludworth Island	1,718*
815+840 - 816+746	Marsh near west end of Sundown Bay	986*
818+975 - 819+500	Marsh at west end of Sundown Bay	605*
819+774 - 820+250	Marsh at west end of Sundown Bay	476
823+824 - 825+814	Marsh at east end of Dunham Bay	1,990
829+123 - 829+213	Marsh across from Cape Carlos	170*
	TOTAL	6,967

* Total length includes an additional 80 feet of mat placed around the tip of the peninsulas.

Additionally, grout bags placed by previous voluntary efforts along about 400 feet of channel between Stations 824+232 to 824+859 were removed and placed in other locations along the channel. Table 5 shows the location that the grout bags were placed.

TABLE 5

1994 GROUT BAG PLACEMENT

STATIONS	LOCATION	LENGTH (Ft)
812+600 - 812+681	Across from east end of Bludworth Island	81
812+728 - 812+741	"	13
812+781 - 812+828	"	47
812+870 - 812+902	"	32
813+176 - 813+376	"	200
816+757 - 816+766	West end of Sundown Bay	9
816+817 - 816+889	"	72
816+980 - 817+005	"	25
819+528 - 819+561	"	33
829+000 - 829+061	Across from Cape Carlos	61
	TOTAL	573

The 1995 contract began in August and covered approximately 1,750 feet of shoreline at various locations within the ANWR. Surveys of the exact station locations have not been completed. Figures 2 and 3 show the reaches of marsh protected by each contract through 1994 only.

During installation of the mats, the slopes were first graded to a uniform slope of 1 Vertical to 3 Horizontal (1V:3H). Excavated material was temporarily stockpiled at the top and toe of the excavated slope and used to backfill the excavated areas. The toe of the revetment generally has an elevation of about -2.0 feet MLT and the top is placed at the existing bank elevation, generally about +3.5 feet MLT.

A geotextile filter fabric was then placed on the slope. The 18-foot wide strips were placed to provide a minimum width of 18 inches of overlap for each joint. The articulated concrete mats of 17- and 19-foot lengths were placed on top of the filter fabric. The mats were then fastened by cables, made of polyester fibers contained within an outer braided jacket, to flexible anchors to avoid slippage down or along the slope. The previously excavated material was then placed over the top and toe of the concrete mats, completing the placement operation.

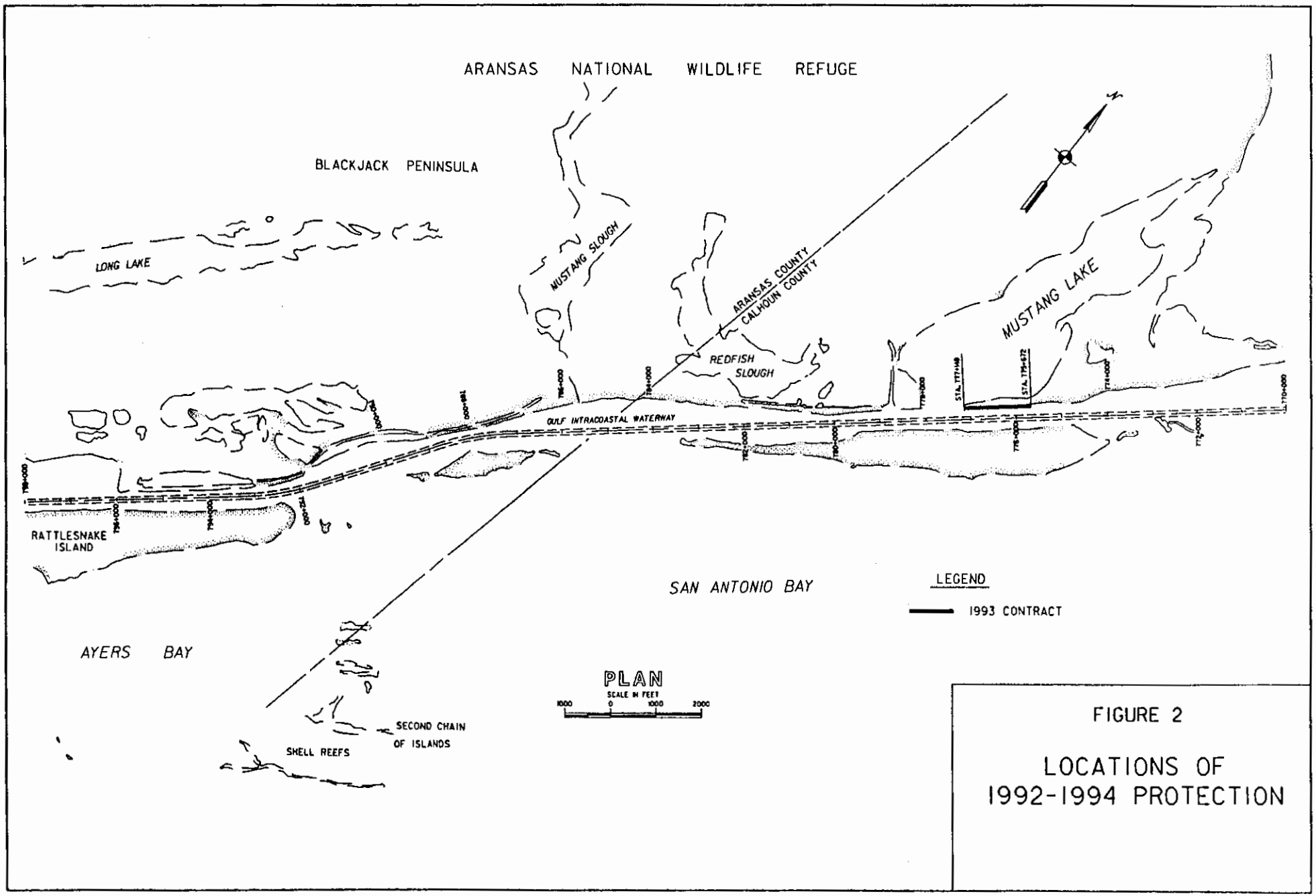

FIGURE 2

LOCATIONS OF 1992-1994 PROTECTION

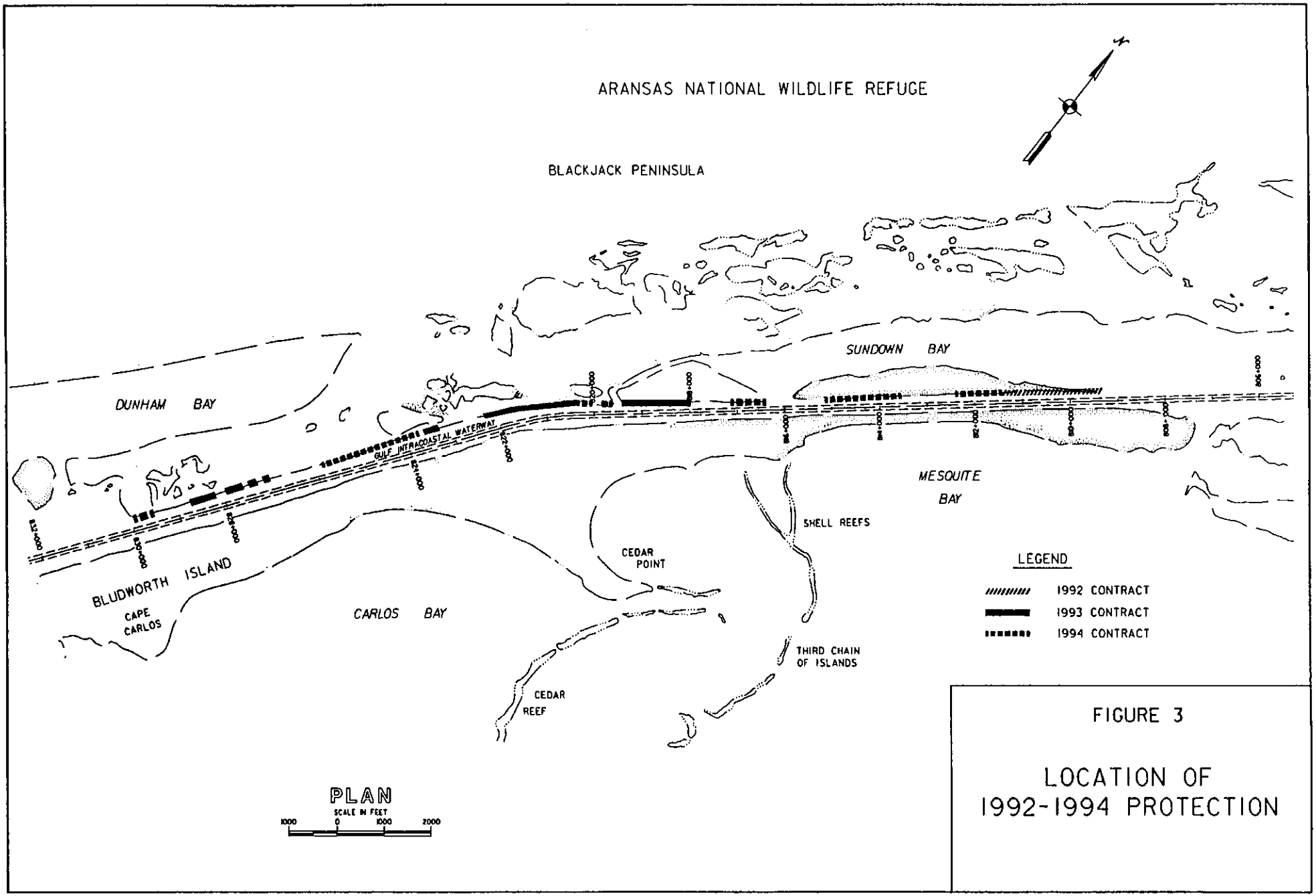

FIGURE 3

LOCATION OF 1992-1994 PROTECTION

FORMULATION OBJECTIVES, CONSTRAINTS, AND CRITERIA

NATIONAL OBJECTIVES

The fundamental national objective of Federal participation in water resources development projects is to assure that an optimum contribution is made to the welfare of all people. The Water Resources Council's Economic and Environmental Principles and Guidelines for Water and Related Land Resources Implementation Studies dated March 1983 and the National Environmental Policy Act of 1969 (NEPA) provide the basis for Federal policy for planning Federal water resources projects. These authorities have established the procedures for formulation and evaluation of water resources projects. Additional policies and regulations, derived from executive and legislative authority, further define the criteria for assessment of plan impacts, risk analysis, review and coordination procedures, and project implementation.

Current Federal policy dictates that National Economic Development (NED) is the primary national objective in water resources planning. NED objectives stress increasing the value of the Nation's output of goods and services and improving economic efficiency on a national level. Planning objectives designed to improve national economic development are concerned with the value of increased output of goods and services resulting from external economics associated with a plan.

The Federal objective of water and related land resources planning is to contribute to national economic development in a manner that is consistent with protecting the Nation's environment. Consequently, the resource's condition should be more desirable with the selected plan than under the without-project condition.

National objectives are designed to assure systematic interdisciplinary planning, assessment, and evaluation of plans addressing natural, cultural, and environmental concerns which will be responsive to Federal laws and regulations. For this study, an NED plan was established as prescribed by guidance as well as taking into consideration the provisions of the Endangered Species Act as it applies to loss of critical habitat of the whooping crane.

PLANNING OBJECTIVES

The study has been guided by objectives which reflect the national goals of improving national economic development as well as being responsive to Federal laws and regulations. Other objectives include the consideration of environmental quality, the improvement of social well-being of the area, and increasing regional economic development, as appropriate. More specifically, plans developed in this study should:

a. Contribute to continued safe and efficient movement of commodities through and along the central portion of the Texas coast;

b. Contribute to the overall economic well-being of the area; and

c. Contribute to environmental quality by maintaining, protecting, preserving, or improving the critical habitat of the whooping crane as well as other fish and wildlife habitat.

PLANNING CONSTRAINTS

Plans must be formulated with regard to adding the problems and needs of the area, taking into consideration future without-project conditions. The plans should identify tangible and intangible benefits and costs from economic, environmental, social, and regional perspectives. Institutional implementation constraints should also be identified. The formulation framework requires the systematic preparation and evaluation of alternative solutions to the recognized water resource-related problems within the study area. The process also requires that impacts of the proposed action be measured and results displayed or accounted for in terms of contributions to: NED, Environmental Quality, Regional Economic Development, and Other Social Effects.

Interaction with other interests must be maintained throughout the planning process to avoid duplication of effort, minimize conflicts, obtain consistency, and assure completeness. The following constraints apply to this feasibility study:

a. Fish and Wildlife habitat affected by a project plan should be preserved, if possible;

b. The study process and plans developed must comply with Federal laws and policies; and

c. Alternative plans which resolve problems in one area should not create or amplify problems in other areas.

FORMULATION AND EVALUATION CRITERIA

Current guidance specifies that the Federal objective of planning is to contribute to national economic development consistent with protecting the Nation's environment. The following general criteria are applicable to all water resource studies. They have generally guided the formulation of this study. Technical, economic, environmental, and social criteria have been established to guide the project development process. These criteria are discussed in the following paragraphs

TECHNICAL CRITERIA

Technical criteria require the preservation of adequate project dimensions to provide safe passage of commercial navigation traffic through this reach of the waterway while eliminating or lessening the impacts of boat traffic on the critical habitat of the whooping crane. These criteria require plans to be compatible with navigation needs and consistent with the requirements of the navigational equipment using this portion of the waterway and to provide a long term plan for the placement of dredged materials in order to continue maintenance of the waterway in the future. These plans must be consistent with specific environmental conditions of the area including soil conditions, topography, and terrestrial and aquatic ecosystems. Formulation of alternative alignments, bank protection methods, and dredged material disposal alternatives and their evaluation was accomplished by analysis of historical and projected shoaling rates, erosion causes and rates, and general structural and non-structural alternatives applicable for conditions which are specific to this area. Technical information used during this study were wave information, aerial photography, historical dredging records, and previously published scientific reports related to this area.

ECONOMIC CRITERIA

The economic criteria require that tangible benefits attributable to projects exceed project costs. Project benefits and costs are reduced to average annual equivalent values and related in a ratio of benefits to costs. This ratio must exceed unity to meet the NED objective. Selected plans, whether structural, nonstructural, or a combination of both, should maximize excess benefits over costs; however, unquantifiable features must be

addressed subjectively. These criteria are used to develop plans which achieve the objective of NED and provide a base condition for consideration of economically unquantifiable factors which may impact on project proposals.

All structural and nonstructural measures for navigation projects should be evaluated using the appropriate period of analysis and the currently applicable interest rate. Total annual costs should include amounts for operation, maintenance, and major replacements, as well as amortization and interest on the investment.

For this study, the above criteria are applicable, but it should also be recognized that since there are damages occurring to critical habitat of an endangered species, the costs of providing the necessary protection is offset by the benefits to the endangered species as described in the Endangered Species Act of 1973. In other words, the benefits, which are unquantifiable by definition since an endangered species is involved, would equal the costs for providing the protection. However, the NED provision must also be satisfied. The economic discussion below is used to show only that continued maintenance of the GIWW with habitat protection measures is economically justified and yields greater net benefits than alternate modes of transportation. This analysis is not intended to be the sole justification for the recommended plan as this is based solely on protection of designated critical habitat as required during formal consultation under Section 7 of the Endangered Species Act.

ENVIRONMENTAL CRITERIA

The general environmental criteria for navigation projects are identified in Federal environmental statutes, executive orders, and planning guidelines. It is the national policy that fish and wildlife resource conservation be given equal consideration with other study purposes in the formulation and evaluation of alternative plans. The basic guidance during planning studies is to assure that care is taken to preserve and protect significant ecological, aesthetic, and cultural values, and to conserve natural resources. These efforts also should provide the means to maintain and restore, as applicable, the desirable qualities of the human and natural environment. Alternative plans formulated to improve navigation should avoid damaging the environment to the extent practicable and contain measures to minimize or mitigate unavoidable environmental damages. Particular emphasis will be placed on the following:

a. Protection, preservation, and improvement of the existing fish and wildlife resources along with the protection and preservation of estuarine and wetland habitats and water quality;

b. Consideration in the project design of the least disruptive construction techniques and methods;

c. Mitigation for project-related unavoidable impacts by minimizing, rectifying, reducing or eliminating, compensating, replacing, or substituting resources;

d. Protection and preservation of endangered and/or threatened species; and

e. Preservation of significant historical and archeological resources through avoidance of effects. This is the preferable action to any other form of mitigation since these are finite, non-renewable resources.

SOCIAL AND OTHER CRITERIA

Plans proposed for implementation should have an overall favorable impact on the social well-being of affected interests, and have overall public acceptance. Structural and nonstructural alternatives must reflect close coordination with interested Federal and State agencies and the affected public. The effects of these measures on the environment must be carefully identified and compared with technical, economic, and social considerations and evaluated in light of public input.

PLAN FORMULATION RATIONALE

The rationale for formulating and developing alternative solutions is discussed in the following paragraphs. The planning framework requires the systematic preparation and evaluation of alternative ways of addressing problems, needs, concerns, and opportunities while considering environmental factors.

The criteria and broad planning objectives previously identified form the basis for subsequent plan formulation, screening, and ultimately plan selection.

The planning process for this study has been driven by the overall objective of developing a comprehensive plan that would eliminate or lessen impacts to the critical habitat from bank erosion along the GIWW. Secondary objectives have been to address other related water resources problems in the study area. The first phase of this process was to establish the magnitude and extent of the problems and then to develop and evaluate an array of alternative solutions to meet the existing and long-range future needs of the area.

The social, economic, and environmental impacts were generally assessed for each plan although not necessarily specifically documented in each case.

During the reconnaissance phase, lines of communications were opened with Federal, State, and local agencies, private groups, and the affected public. Through scoping and other coordination meetings, public involvement activities were continued throughout the planning process.

The expected future without-project scenario was first developed for comparison with other alternatives. Nonstructural and structural plans were developed to address the planning objectives. For the structural plans, an array of bank erosion control methods were developed, evaluated, and screened for applicability in this area. Then several realignments were investigated as to possible means to satisfy the objectives of erosion control and ways to reduce or eliminate impacts to the habitat from potential spills from commercial navigation traffic.

Through a two-phased screening process, a plan was ultimately selected. A long-term dredged material disposal plan was also developed for the selected plan. Further preliminary design refinements were accomplished for the selected plan prior to developing a baseline cost estimate for this plan.

FUTURE WITHOUT-PROJECT CONDITIONS

Future without-project conditions form the basis from which the various alternatives are compared. The without-project conditions display the most likely future scenario. This scenario involves the consideration of the impacts of the erosion process on the land and to the existing physical and environmental features within the project area affected during a 50-year project life.

The USFWS first raised concerns about the effects of erosion upon the whooping crane and its critical habitat in 1988 during review of a biological assessment for maintenance dredging within the ANWR area. While the District concluded that no direct effects were occurring to the cranes, the USFWS cited the loss of critical habitat and requested formal consultation. In January 1989, the Sierra Club notified the District of its intent to sue for failing to consult over the loss of critical habitat. In May 1989, the District entered into formal consultation over the loss of critical habitat within the ANWR.

Over the next several years the District and the USFWS were at a virtual impasse. The USFWS drafted Biological Opinions stating that the indirect effects of erosion from the GIWW were jeopardizing the whooping crane and adversely modifying its critical habitat. The USFWS was prepared to issue a "Jeopardy" opinion without reasonable and prudent alternatives to protect the critical habitat if the District had not agreed to seek a solution for the erosion problem. A jeopardy opinion with no action on the District's part would have resulted in a lawsuit filed by one or more environmental groups. Concurrently with the Section 7 coordination, the District was able to identify funds to begin armoring the most critically eroded areas.

After lengthy coordination efforts involving the Regional Director of USFWS, and the Commander of Southwestern Division, a plan of action to halt erosion was developed. This plan included the short-, mid-, and long-term solutions discussed earlier. In May 1993, the USFWS issued its final Biological Opinion (Appendix B, Section 6) concerning maintenance dredging within the ANWR.

As part of the Biological Opinion, the Galveston District will continue maintaining the GIWW within the ANWR and armoring at least 2,000 feet of shoreline each year until the Section 216 feasibility study is completed and a long-term solution developed, authorized, and constructed. However, if the Feasibility Report did not recommend a long-term solution to the erosion problem, the USFWS would have issued a new Biological Opinion stating that the GIWW is still contributing to the erosion of designated critical habitat of the whooping crane. Under the Endangered Species Act, this opinion would have immediately made the

District liable to a lawsuit. This would have occurred shortly after the release of the final Feasibility Report.

Waterway traffic would not halt immediately, but as shoaling continues, navigable depths would continue to decrease over time. The most crucial shoaling areas within the critical habitat reach of the GIWW are as follows:

Stations	Location	Dredging Frequency
735+000 to 740+000	San Antonio Bay	2 to 3 years
770+000 to 775+000	NE end of ANWR	2 to 3 years
835+000 to 840+000	SW end of ANWR	2 to 3 years

The open water area of San Antonio Bay is not considered to be subject to jeopardy because there are no land areas and therefore no habitat affected by erosion. The GIWW at the northeast end of the Refuge is a critical area because of the high shoaling rate. This reach was dredged in 1993, and is scheduled for maintenance dredging in the 1996 dredging cycle. The channel at the southwest end of the Refuge has a dredging frequency of 2 to 3 years and was last dredged in 1992, and is scheduled for maintenance dredging in the 1996 dredging cycle.

Table 6 illustrates the potential impact on commercial barge traffic for the two critical reaches affected by the jeopardy ruling from vessel draft restrictions only. One-way traffic would be necessary in these critical areas and very likely in other areas outside of these high shoaling areas. No estimate of delays and their inherent costs has been attempted. The total tonnage through this reach of the waterway is roughly estimated at 14 million tons.

If maintenance dredging is not allowed to continue within the boundaries of the critical habitat with the exception of the open bay reaches, and uniform shoaling is assumed, over 60 percent of the total traffic through this reach would be affected by 2003. Within a year after this time, essentially all of the traffic would be restricted to drafts less than 6 feet which would be considered uneconomical for all shippers. This would be due to the draft restrictions as well as possible vessel groundings, which would likely cause the channel to close because of the dangers of spillage or collision which would directly affect the habitat area. If shoaling were to be severe in a short reach for whatever reason, navigability could cease anytime after 1995. Also, if a storm, causing severe shoaling, were to occur prior to 2003, the year the storm struck would mark project closure.

TABLE 6

POTENTIAL VESSEL IMPACTS

Reach	Year	Draft Limit(ft)	Trips Affected By Draft	% of Total Traffic Affected
770-775+000	1996	12	1,322	4.0
	1998	10	4,165	13.0
	2000	8	15,607	48.0
	2003	6	20,656	63.0
	After 2003	<6		100.0
835-840+000	1996	12	1,322	5.0
	1999	10	4,165	13.0
	2001	8	15,607	48.0
	2005	6	20,656	63.0
	After 2005	<6		100.0

Source: Waterborne Commerce of the United States, Part 2, 1992.

Once the waterway is closed to all traffic through this reach, the commodities would be transported by the next least costly alternative mode of transportation. This would also remove the threat of a spill, directly affecting birds or their habitat. However, the critical habitat would continue to erode from natural processes.

If no action is taken at the end of the feasibility study to protect the critical habitat from further erosion, direct effects of erosion from continued navigation use and natural causes will occur at about two acres per year up to 2003. After 2003 and up to the end of the study period (2051), it is estimated that natural erosion will occur at about one acre per year, for a total of about 64 acres of direct effects for the period 1996-2051. In addition, indirect effects are expected within McMullen Lake, Sundown Bay, and numerous smaller marsh ponds which are prime feeding areas for the whooping cranes. As erosion continues, the general deepening of these shallow bays and marsh ponds would occur, resulting in the loss of peripheral marshes and making the areas inaccessible for crane feeding. This would result in an indirect loss of 1,075 acres of prime whooping crane feeding area.

PLAN FORMULATION

Plan formulation is a dynamic process that begins with a broad scope, may change direction as new information and data are obtained, and focuses on the most effective means of addressing the problem. This is accomplished as costs, benefits, and impacts of the various options become more clearly defined.

The process for this study began with a wide range of alternative solutions that were considered reasonable and practical for the ANWR reach of the GIWW. Additional alternatives were added as the study progressed. The alternative plans presented in the following sections were developed to essentially the same level of detail for comparison purposes.

The "Plan Formulation" section presents the various alternative plans on a general level, whereas the "Plan Assessment and Screening of Alternatives" section shows the plans in greater detail. Subsequent sections of the report present the screening process leading up to final plan selection. The ultimate goal of this process was to identify the National Economic Development (NED) Plan and the selected plan.

ALTERNATIVES

The options available to address the planning objectives of continued safe and efficient movement of commodities currently being moved through this area and reduce losses to the critical habitat of the whooping crane are as follows:

- shift to alternate modes of transportation;
- realign the existing channel and provide erosion control to protect critical habitat where necessary; and
- continue to maintain the existing channel alignment and add erosion control to protect critical habitat, as appropriate.

In addition to a no-action plan, the alternatives were broadly categorized into nonstructural and structural solutions. These alternatives and the screening which occurred within each category are discussed below.

NO-ACTION PLAN

The basic option to any proposed plan of improvement is the "no-action" alternative which is automatically adopted when proposed plans fail to meet the required criteria as discussed above in the "Formulation Objectives, Constraints, and Criteria" section. Continued maintenance of the existing channel without some form of bank erosion protection is not a viable option as previously discussed. Therefore, accepting the "no-action" option would mean that the waterway would be closed through this area and all commodities would have to moved by alternate transportation modes, such as ocean-going barges, truck, or rail. In this case, the no-action plan would be equivalent to a nonstructural solution which is discussed next.

NONSTRUCTURAL PLANS

Nonstructural plans are those other than the existing method of moving commodities by inland barge through the designated critical habitat of the whooping crane. This would involve the utilization of alternate modes of transportation such as the use of ocean-going barges, rail, or rail-inland barge combinations. Trucks were not included in the comparative modes analysis because they are not cost competitive for long hauls to rail or ocean-going barge due to the volume of commodities transported per trip. The typical ratio between trucks and inland barges is about 60 to 1 and with rail the ratio is about 15 to 1. Truck costs were found to be about two times higher than rail or barge costs; therefore, no further analysis of the truck alternative was made. The remaining analysis included ocean-going barges, rail, or rail-inland barge combinations.

The type of alternative selected for this analysis for each commodity was driven by economics, i.e., the most cost-effective alternative was selected. Origins and destinations, and volumes and types of commodities played a significant role in the alternative selected. For the ocean-going barge alternative, additional costs for storage facilities both at the shipping and receiving ends would likely be involved because of the volume difference between ocean-going barges and inland barges, however, this refinement was made in the analysis. A typical ratio is three inland barge loads to one ocean-going barge load.

The results of this analysis are included in the "Benefit Analysis" section within the "System Analysis" section and reflect the costs for the nonstructural plan and the no-action plan. These costs are also considered in the identification of the NED plan and the selected plan.

STRUCTURAL PLANS

The structural plans consisted of channel realignment alternatives and bank stabilization of the existing alignment. Two of the realignments options, referred to as the north and barrier island alignment plans, are completely outside the critical habitat of the whooping crane and therefore, could be considered nonstructural plans. However, for purposes of this report they are included in the "Structural Plans" section.

Four basic alignments were investigated during the initial plan formulation phase. These are designated the north alignment plan, open bay alignment, barrier island alignment, and existing channel alignment. Since the open bay alignment plan and the existing channel alignment cross the critical habitat area, channel banks which would be subject to erosion from waterway traffic would require some type of erosion control. The various devices were first compared, taking into account the advantages and disadvantages of each and their applicability to the ANWR area.

SYSTEM ANALYSIS

A critical element in the basic study process is an analysis to determine if the overall system that encompasses the investigated problem area is economically justified. The results of this analysis form the basis by which alternative plans of improvement are evaluated, i.e., whether the improvements alone must be justified or whether the improved project must be justified. The results also show the degree of Federal interest in continued operation and maintenance of the existing system elements if improvements are not made to the system.

The system analysis is performed for the system elements as they currently exist and under current operation and maintenance procedures. This analysis for the overall waterway system is independent from the "future without-project conditions" analysis presented earlier in this report for the Aransas segment of the system. In this particular case, the analysis for the Aransas reach and that for the system are the same as discussed below.

SYSTEM DESCRIPTION

The system selected for this analysis consists of the shallow-draft channels and appurtenant navigation features between the Matagorda Ship Channel and Corpus Christi Ship Channel. These limits were selected because this segment includes the Aransas study area and because it represents an independent shallow-draft channel increment that is bounded by two deep-draft harbors. These harbors could provide trans-shipment facilities for waterway commerce and, therefore, represent a logical boundary for the waterway system.

This system includes a 63-mile reach of the GIWW main channel; the 35-mile long, 9-foot by 100-foot Channel to Victoria, and the 12-mile long 12-foot by 125-foot Lydia Ann Channel.

Waterborne Commerce data show that 14.4 million tons of commerce moved on the system channels in 1992. This commerce was composed entirely of the tonnage that moved through the Aransas area. The Channel to Victoria had 4,265,228 tons of commerce transported on it in 1992. The Channel to Rockport reported no commerce while the Channel to Aransas Pass reported 13,000 tons of commerce in 1992, most of which was transported offshore via the Aransas Pass Channel. Therefore, the tonnage transported on the Rockport and Channel to Aransas Pass channels is considered

insignificant and is not addressed in this analysis. As a result, the commodity movements through the Aransas reach are the same as those through the "system" and consequently the benefit analysis for the Aransas reach is the same as that for the system.

OPERATION AND MAINTENANCE

MAINTENANCE DREDGING HISTORY

Past maintenance dredging records were analyzed to determine the average frequency between maintenance dredging cycles and average annual shoaling rates for the GIWW Main Channel - Matagorda Bay to San Antonio Bay, Tumstake to Live Oak Point (across San Antonio Bay), and San Antonio Bay to Corpus Christi Bay (via Lydia Ann Channel). Figure 4 shows the Maintenance Dredging History for this reach of the waterway. The total volume of material removed during the maintenance dredging was averaged to compute an annual shoaling rate for each channel. The maintenance dredging records were also analyzed for the Channel to Victoria.

The periods analyzed (number of years of available dredging records) used in determining annual shoaling rates ranged from 1.8 years for the Channel to Victoria to 9 years for the reach from Matagorda Bay to San Antonio Bay. The frequency of dredging varies from area to area because of a number of factors. These factors include a source of material, type of material, orientation of the channel with respect to prevailing wind directions, current patterns, local topographic and bathymetric features, and various combinations of the above.

The existing practice for placement of maintenance materials from the GIWW consists of pumping accumulated materials from the channel bottom to designated disposal areas adjacent to the channel. Prior to each dredging operation, State and Federal resource agencies, and others which have indicated interest in dredging operations in this area, are notified of the upcoming dredging contract and necessary changes suggested by these groups are incorporated into the contract where feasible and appropriate. Alterations to existing dredging practice may consist of changes to dredged material placement operations, altering the contract period to accommodate the various species which may use the site for nesting or other purposes, or incorporation of beneficial uses of dredged material.

FIGURE 4
MAINTENANCE DREDGING HISTORY
MATAGORDA BAY TO CORPUS CHRISTI BAY (VIA LYDIA ANN CHANNEL)

CONTRACT NO.	CONTRACT PERIOD	VOLUME (C.Y.)
93-0024	JUN 93	1,270,000
92-0046	JUL 92-DEC 92	862,474
92-0037	MAY 92 - AUG 92	868,017
91-0029	MAY 91 - JUL 91	1,717,895
90-0027	JUN 90 - SEP 90	1,551,758
89-0029	JUL 89 - AUG 89	1,540,382
88-0022	JUL 88 - SEP 88	841,166
87-0004	JAN 87 - JAN 87	797,489
86-0025	MAY 86 - SEP 86	1,234,567
86-0018	MAY 86 - JAN 87	1,216,485
85-0019	MAY 85 - AUG 85	1,246,438
85-0005	JAN 85 - FEB 85	657,617
83-0039	AUG 83 - JAN 84	1,740,141
82-0019	APR 82 - JUN 82	2,085,915
81-0026	MAY 81 - JUL 81	1,568,315
80-0031	APR 80 - OCT 80	958,619
79-0035	JUN 79 - AUG 79	1,565,476
77-0047	JUL 77 - JAN 78	1,917,075
76-0060	JUL 76 - NOV 76	2,200,783
74-0098	MAY 74 - AUG 74	1,281,621
74-0030	NOV 73 - MAY 74	1,839,792
73-0114	JUN 73 - JAN 74	2,171,472
72-0058	APR 72 - JUN 72	2,140,776
71-0054	SEP 70 - MAR 71	2,147,291

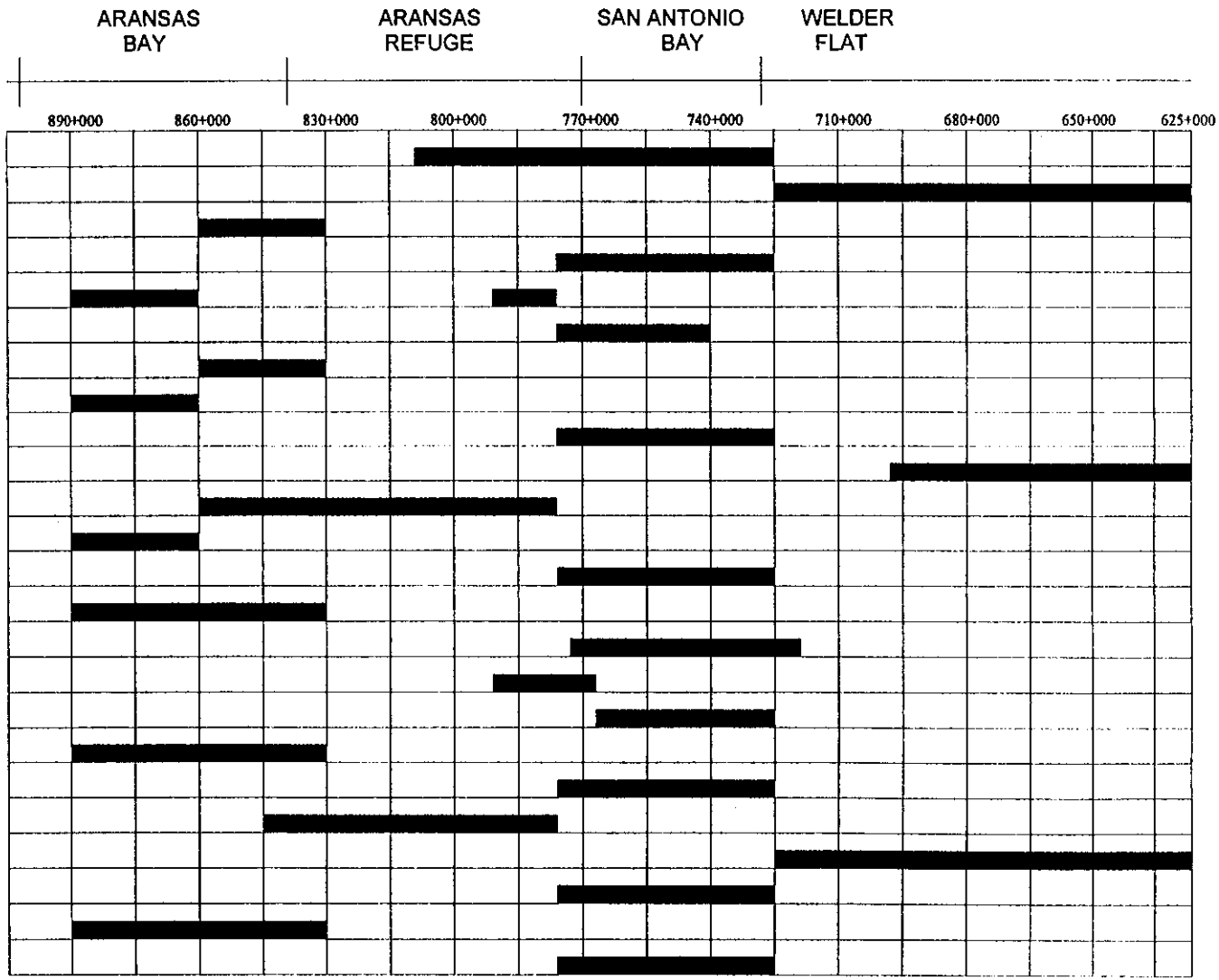

Matagorda Bay to San Antonio Bay

This reach of the main channel extends from Stations 616+587 to 724+000 and includes a part of the whooping crane critical habitat known as the Welder Flats area. The reach northeast of Turnstake Island has been dredged twice since May 1974, resulting in an average dredging frequency of once each 9 years and an average shoaling volume of 115,000 cubic yards per year. This material is routinely removed by pipeline dredge and deposited in designated disposal areas which have been coordinated with State and Federal resource agencies.

Turnstake to Live Oak Point (across San Antonio Bay)

The Turnstake to Live Oak Point reach extends from Stations 724+000 to 775+000. Maintenance dredging records show that this reach has been maintained nine times since March 1971, resulting in an average dredging cycle of about 2.5 years. The average annual quantity of material removed is 691,000 cubic yards. This material is removed by pipeline dredge and placed in disposal sites located along the channel.

San Antonio Bay to Corpus Christi Bay (via Lydia Ann Channel)

The San Antonio Bay to Corpus Christi Bay (via Lydia Ann Channel) reach of the GIWW extends from Stations 775+000 to 951+492. This reach has been maintained 11 times since June 1972, resulting in an average dredging cycle of about 1.8 years. The average quantity of material removed annually is 619,000 cubic yards. The material is removed by pipeline dredge and placed in disposal sites located along the channel.

Channel to Victoria

Approximately 18,000 feet of the lower part of the Channel to Victoria is located within the critical habitat of the whooping crane. The channel has been maintained 12 times since September 1970, resulting in an average dredging cycle of about 1.8 years (Table 7). The average annual quantity of material removed is 629,000 cubic yards. This material is removed by pipeline dredge and placed in unconfined disposal sites behind small islands located adjacent to the channel in San Antonio Bay.

TABLE 7

SUMMARY OF MAINTENANCE DREDGING HISTORY

Reach	Dredging Frequency (yrs)	Dredging Shoaling (cy/yr)
GIWW - Matagorda Bay to San Antonio Bay	9.0	115,000
GIWW - Turnstake Island to Live Oak Point	2.5	691,000
GIWW - San Antonio Bay to Corpus Christi Bay	1.8	619,000
Channel to Victoria	1.8	629,000

MAINTENANCE COSTS

The most recent costs to dredge the GIWW in the Aransas area has varied from $0.51 to $1.31 per cubic yard. Table 8 shows a summary of the most recent cost per cubic yard for each reach of channel, as well as the cost per year for each reach and the total cost per year for the entire reach of GIWW (via Lydia Ann Channel) between Stations 616+587 to 951+492, including the Channel to Victoria. The price levels ranged from 1990 to 1993, and for purposes of this report, were not adjusted for inflation or converted to a constant dollar value.

TABLE 8

SUMMARY OF MAINTENANCE DREDGING COSTS

Reach	Cost per CY ($/cy)	Annual Cost
GIWW - Matagorda Bay to San Antonio Bay	$1.31	$ 151,000
GIWW - Turnstake Island to Live Oak Point	0.51	352,000
GIWW - San Antonio Bay to Corpus Christi Bay	0.53	328,000
Channel to Victoria	0.87	547,000
Total		$1,378,000

BENEFIT ANALYSIS

INLAND NAVIGATION TRANSPORTATION BENEFITS

The alternate modes analysis was performed in response to the potential closing of the GIWW through the ANWR in order to protect the critical habitat of the whooping crane. Closure of this portion of the GIWW would force shippers who transport commerce across this reach of the waterway to seek alternate modes of transporting goods which are now carried by inland barge. The alternate modes studied in this analysis were ocean-going barge and rail. These modes were considered to be the least-costly alternatives to inland barge.

The transportation costs used in this study were provided by the Institute for Water Resources (IWR). Rail and inland barge rates were developed by using transportation models developed by Reebie Associates. These models route the commodities from their origin to their destination on the selected mode of transportation, then compute the total cost of the movement.

The alternate modes analysis began with a determination of origins and destinations of commodities travelling through, to, or from the ANWR study area. Using the Waterborne Commerce Statistics Center's 1992 port-to-port cargo history data base, 6,620 port-commodity movements were analyzed which met the criteria of having travelled through the ANWR study area during at least part of their journey. These movements carried 14.4 million tons of cargo and represent over 500 unique combinations of ports and commodities. A distribution of cargo by commodity is presented in Table 9. The total tonnage was then distributed to shipping/receiving ports within or west of the study area. Table 10 presents that distribution by tonnage.

In order to handle the magnitude of the data, the individual movements were summed by origin and destination port combination and by commodity. Ports were then sorted by depth of channel into deep-draft and shallow-draft designations. Shipping and receiving ports were also aggregated into general origin-destination nodes within the inland waterway system. If both shipping and receiving ports were identified as deep-draft and if the tonnage shipped was sufficiently large, then ocean-going barge was employed as an alternate mode. Otherwise the commodity was shipped by rail as the alternate mode.

A comparison of costs was made for moving the 1992 tonnage from origin to destination using inland barges as the existing condition and using either rail or ocean-going barge as

TABLE 9
1992 TONNAGE BY COMMODITY
MOVING THROUGH, TO, OR FROM THE ANWR STUDY AREA

WCSC COMMODITY CODE	TONNAGE
CHEMICALS & RELATED PRODUCTS	
27220	1,534
51112	65,872
51113	264,327
51119	23,507
51121	315,120
51122	428,189
51123	335,704
51124	306,596
51125	1,521
51126	24,933
51127	547,667
51129	7,501
51133	15,118
51135	23,395
51211	284,225
51212	1,572
51213	78,128
51215	26,650
51216	9,009
51221	44,409
51223	1,441
51229	3,670
51299	229,407
51371	17,872
51372	25,645

WCSC COMMODITY CODE	TONNAGE
CHEMICALS & RELATED PRODUCTS (CONT.)	
51461	76,457
51483	297,860
51484	170,339
51617	203,362
51623	76,350
52224	873
52226	70,420
52231	8,458
52261	338,251
52263	381,163
52322	2,567
55000	974
56213	2,000
56216	1,274
56219	160,158
56222	1,400
56229	31,531
56293	1,760
56294	11,635
56299	14,428
59721	406,253
59890	1,468
59990	3,271
SUBTOTAL	5,345,264
WASTE & SCRAP IRON	
28200	3,810

WCSC COMMODITY CODE	TONNAGE
COAL & LIGNITE	
32500	77,452
CRUDE MATERIALS	
27322	3,888
27330	848,517
27340	1,103,375
27350	14,643
27820	1,658
27830	14,428
27850	18,200
27891	1,660
27892	2,400
27899	3,278
28500	166,324
28750	678
28780	5,606
SUBTOTAL	2,184,655
MANUFACTURED EQUIPMENT, MACHINERY & PRODUCTS	
72000	3,608
74400	1,775
89900	902
99920	6,463
SUBTOTAL	12,748

WCSC COMMODITY CODE	TONNAGE
PRIMARY MANUFACT GOODS	
66330	882
67090	4,248
67120	15,525
67140	1,653
67150	6,321
67200	4,057
67300	69,662
67600	33,562
67800	18,443
67900	1,981
68700	19,330
69000	131,848
SUBTOTAL	307,512
FOOD	
4100	2,904
4400	12,094
4530	8,448
6110	88,667
8120	2,908
11101	133
22230	2,090
SUBTOTAL	117,244

WCSC COMMODITY CODE	TONNAGE
AGRICULTURAL PROD	
41110	5,399
42000	733
SUBTOTAL	6,132
PETROLEUM & RELATED PRODUCTS	
33300	1,623,966
33411	1,215,196
33412	59,732
33419	874,304
33421	121,544
33429	429,184
33430	320,025
33440	964,251
33450	69,376
33521	7,184
33530	399,605
33540	42,983
33590	209,500
34000	48,457
SUBTOTAL	6,385,307
PASSENGERS ONLY	
40	1,267

TOTAL 14,441,391

TABLE 10

SHIPPING/RECEIVING PORTS
WITHIN OR WEST OF THE ANWR STUDY AREA
WITH TONNAGE MOVING THROUGH, TO, OR FROM THE STUDY AREA

SHIPPING/RECEIVING LOCATIONS/PORTS	WCSC PORT DESIGNATION	TONNAGE RECEIVED/SHIPPED
Victoria	60690	4,265,228
Aransas Pass/Port Aransas	66530/66533	153,075
Harbor Island/Ingleside	66534/66537	40,814
Corpus Christi	60770	9,178,345
Arroyo Colorado	60940	141,232
Port Isabel	66669	167,062
Brownsville	66683	472,424
Other Ports		23,211
Total Tonnage		14,441,391

the future condition. The Reebie Associates Barge Cost/Service Analysis Model (Version 3.1) and the Reebie Associates Rail Cost Analysis Model (Version 5.0) were used to generate respective transportation costs. IWR provided ocean-going barge costs.

The cost variance between modes is exhibited by a comparison of transportation costs between Houston and Corpus Christi, a port-to-port combination that accounts for 22 percent of all traffic traversing the area. The cost for transporting gasoline by inland barge averaged $4.95 per ton; by ocean-going barge, $7.05 per ton; and by rail, $7.18 per ton. Overall, shippers can expect significantly higher transportation costs if forced to alter their present use of inland barges within the study area.

The total cost of shipping the 1992 traffic traversing the area from origin to destination equalled $95 million travelling by inland barge. If the same traffic had been shipped by either ocean barge or rail as an alternate mode, the cost would be $141 million or 48 percent higher than existing costs.

The commodity movements on the entire GIWW from Brownsville, Texas to Apalachee Bay, Florida are projected to continue to increase. This projected increase between 1988

and 2010 was approximately 17 percent, or an equivalent annual rate of 0.78 percent. Tonnage movements on the reach of waterway between Galveston Bay and Corpus Christi Bay, which includes the study reach, have increased on the order of about 1 percent per year, sometimes more sometimes less, depending upon which years are picked and the inherent fluctuations in the annual tonnage figures. These figures demonstrate the economic stability of the overall GIWW as well as the area involved in this study.

Historically, the study area's 1987, 1989, and 1992 tonnage volumes were 13.5 million, 14.3 million, and 14.4 million, respectively. For purposes of this report, there has been no increased future tonnages included in the analysis, that 1992 tonnages of 14.4 million are representative of future tonnages, and therefore the average annual benefits are reflected in the transportation savings for 1992. This approach understates the overall benefits for this portion of the waterway.

ECONOMIC ANALYSIS

The economic benefits or transportation cost savings derived from the continued maintenance of the Aransas reach of the GIWW at 12 feet were calculated based on the difference in transportation costs between the existing project and the least cost alternative as discussed above. This is approximately $46 million annually. The total average annual cost for maintenance dredging is estimated at $1.4 million. This yields an excess benefits over costs of $44.6 million or expressed in a benefit-to-cost ratio relationship of 32.4. Table 11 summarizes this economic analysis. This does not include positive or negative changes to the environmental amenities of the area either caused by the existing waterway or those which may be incurred if the waterway was abandoned and allowed to revert naturally to pre-project conditions. Environmental amenities which may be impacted include recreational and commercial fishing, or other more passive environmental endeavors.

TABLE 11

ARANSAS SYSTEM SEGMENT TRANSPORTATION COSTS

Annual Tonnage	14,441,391
Existing Transportation Cost	$ 95,000,000
Alternative Mode Transportation Cost	$ 141,000,000
Transportation Cost Savings	$ 46,000,000
Savings per Ton	$ 3.18

Since the commodities moving over the system channels are essentially the same as those moving over the Aransas segment, the results of the analysis summarized above were extended to include the system commerce. Applying the computed cost savings though the Aransas reach to the annual total system tonnage yields a system transportation cost savings of $71,578,000. This benefit far exceeds the annual cost to operate and maintain the system channels and navigation features. The system economic analysis is summarized in Table 12.

TABLE 12

ARANSAS SYSTEM SEGMENT ECONOMIC ANALYSIS

Annual Benefits	
Annual Tonnage	14,441,391
Savings per Ton	$ 3.18
Transportation Cost Savings	$ 46,000,000
Annual Costs	
Maintenance Dredging	$ 1,378,000
Total Annual Costs	$ 1,378,000
Net Annual Benefits	$ 44,622,000
Benefit to Cost Ratio	32.4

CONCLUSIONS

The foregoing analysis shows that the investigated waterway system is economically justified and that alternative plans to alleviate the problems in the system can be evaluated based on their own merits. The analysis also demonstrates that there is Federal interest in continued operation and maintenance of the investigated waterway system as it currently exists. However, the primary justification for the project remains the need to protect critical habitat for an endangered species as required by the Endangered Species Act.

PLAN ASSESSMENT AND SCREENING OF ALTERNATIVES

The ultimate objective of the feasibility study is to arrive at a selected plan after a full range of alternatives have been analyzed. This involves a comparison between each alternative and the expected "without-project" consequences, considering economic, environmental, and social impacts.

Since the nonstructural plan of alternate transportation modes is the same as the no-action plan, it was retained for further comparison with the structural plans. The four structural plans consisted of three realignment plans and bank protection for the existing alignment.

A general screening process was first employed to address various types of bank erosion control devices and modifications to the operational procedures or to the existing channel cross-section. Then a two-phase screening process of the structural alternatives was used. The first phase consisted of an initial screening of the four structural plans. The second and final screening phase was necessary because one of the plans (the open bay alignment) was further refined for additional comparison purposes.

GENERAL SCREENING

EROSION CONTROL DEVICES

When considering eliminating or greatly reducing the erosion impacts from navigation traffic and wave attack, hardening the banks would provide the desired erosion control. There are a number of erosion control devices available on the market, however, many do not have a long-term record to support claims of their functional quality and durability. These were eliminated from further consideration.

There are two types of wave exposure conditions in the project area that erosion control devices must withstand. One condition occurs in areas with very little exposure to wave attack, except from boat and tow traffic, and the other consists of shoreline areas exposed to open water with a long fetch which would allow the generation of higher, more erosive waves.

The erosion control alternatives evaluated varied from vertical wall or bulkhead structures, to armoring the banks with some type of erosion-resistant material such as stones (riprap), or some type of flexible mat.

A comparative analysis of ten different types of erosion control devices was performed for the same conditions. Each design was evaluated for the two types of locations mentioned above: 1) in an area which is protected from wave action, and 2) the other in an area which is exposed to more wave action, such as a reach that is adjacent to an open bay.

For reaches protected from wave action, the preliminary design used for screening purposes consisted of top elevations ranging from +5.0 feet to +3.0 feet MLT and toe elevations ranging from +0.5 feet to -5.0 feet MLT, depending upon the type of structure. Filter cloth would be used for most of the structures to prevent earthen materials from being pulled from underneath the structure causing it to subside. In locations where the devices would be exposed to extreme wave action, the preliminary design used was top elevations ranging from +7.0 feet to +3.0 feet MLT and toe elevations ranging from -0.5 feet to -14.0 feet MLT (sheetpile wall), again depending upon the type of structure employed. These designs assumed an average ground or bottom elevation of 0.0 feet MLT for unprotected reaches and +2.5 feet MLT for protected reaches.

Figures 5 through 14 show cross sections for each type of structure. Table 13 shows a summary of the advantages and disadvantages for each of the ten structure types.

Under the National Wildlife Refuge System Administration Act, as stated in the Code of Federal Regulations (50 CFR 29.21), the Regional Director of the USFWS has the authority to determine compatibility of all activities on refuge property with the original purpose of the refuge. Preliminary coordination with Refuge personnel indicates that only the concrete mat structure would be considered compatible with the Refuge purpose. All of the other types of structures would not be approved for use on Refuge property. Additionally the concrete mats were selected by the Refuge for use in constructing a 400-foot long demonstration project west of Sundown Bay in 1991. This project demonstrates the compatibility of this type of structure, as well as its effectiveness in erosion control. Based on a comparison of the advantages/disadvantages of the different structures and the preferences of the Refuge personnel during coordination with USFWS, the articulated concrete mats were selected as the preferable erosion control device for this area and used in this report for design and cost purposes.

The articulated concrete mats are the least costly erosion protection compatible with the requirements of the Refuge personnel for protecting critical habitat of the whooping crane. The device is median priced with additional qualities preferred over less costly devices. These qualities include freedom of movement along both horizontal axes and an ability to readily conform to bank irregularities. Also, the utility of the mats would not be lost if hit by

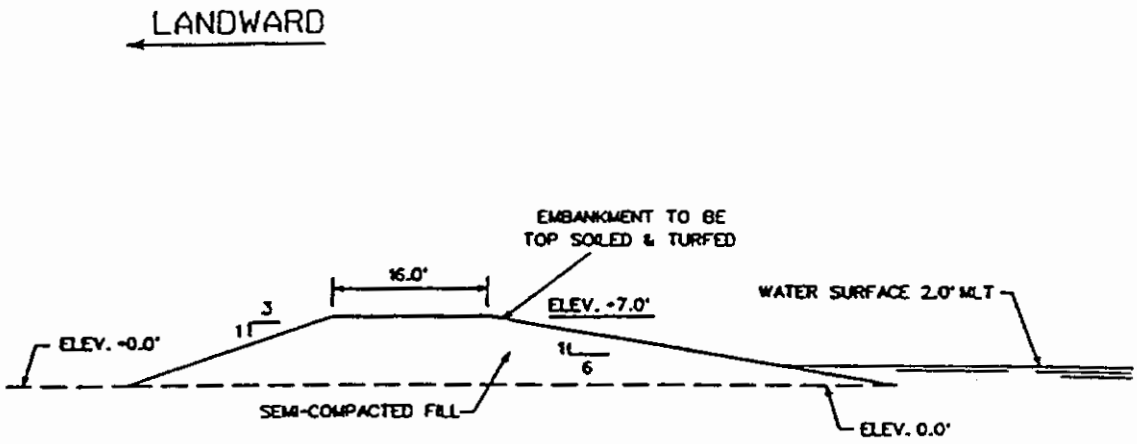

UNPROTECTED REACH

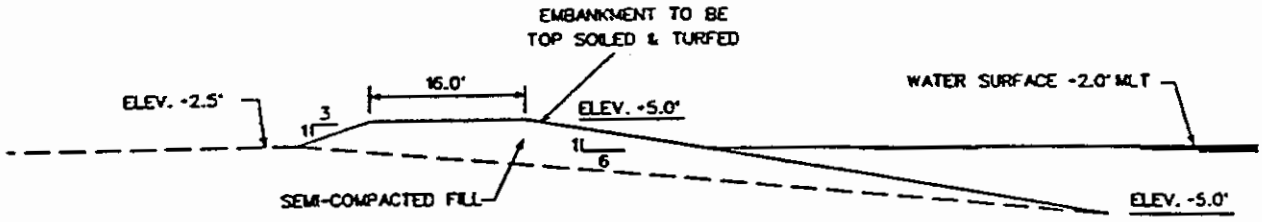

PROTECTED REACH

FIGURE 5
EMBANKMENT

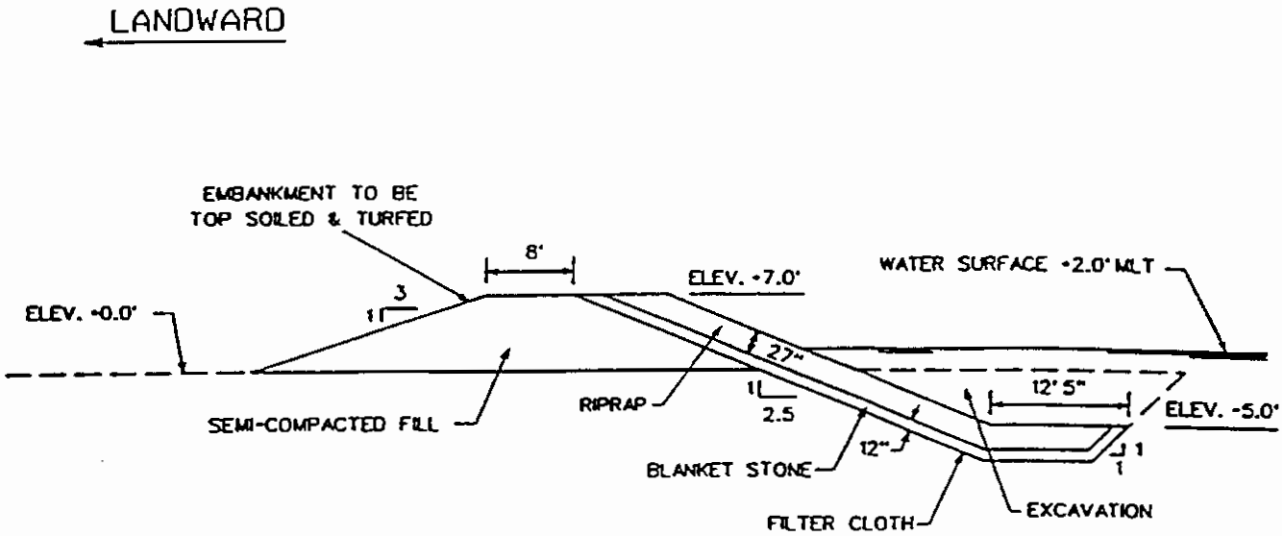

UNPROTECTED REACH

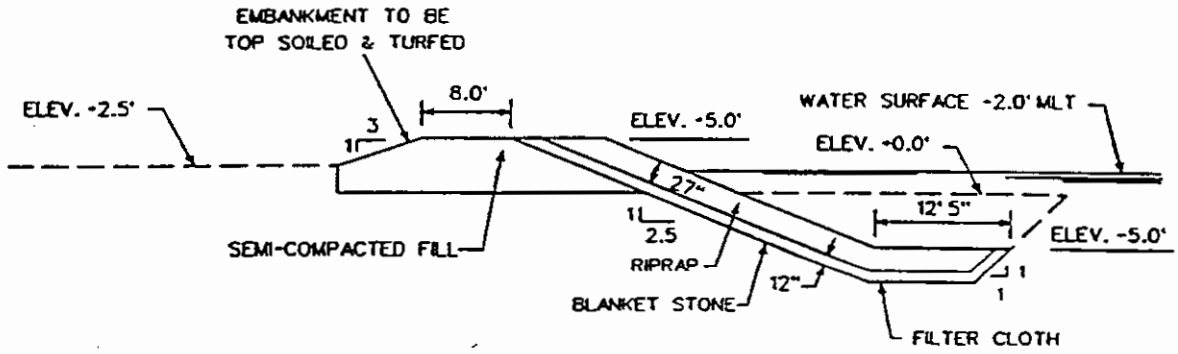

PROTECTED REACH

FIGURE 6
EMBANKMENT AND STONE PROTECTION

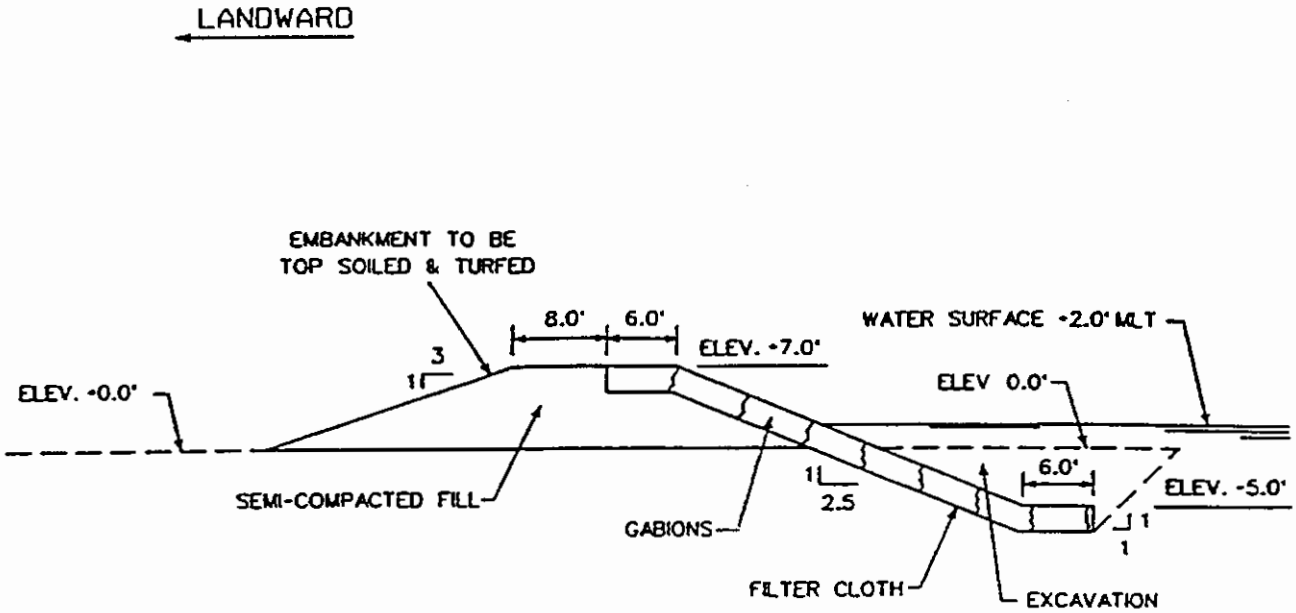

UNPROTECTED REACH

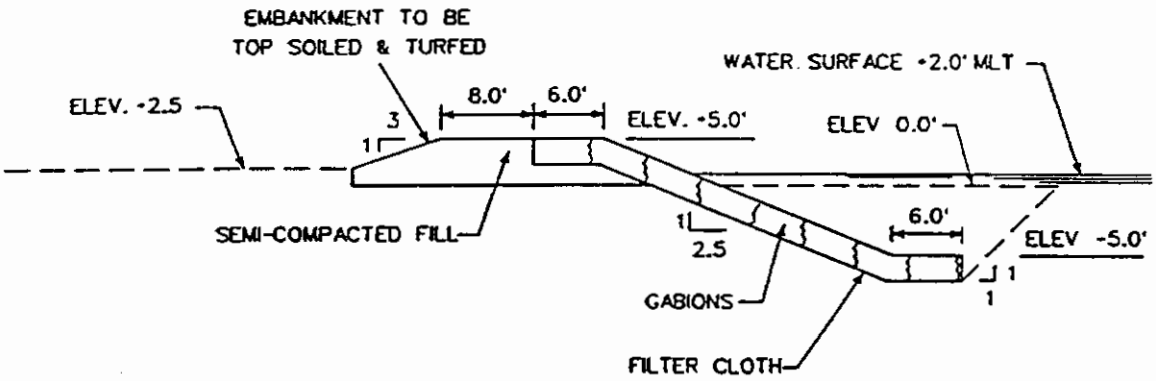

PROTECTED REACH

FIGURE 7
EMBANKMENT AND GABIONS

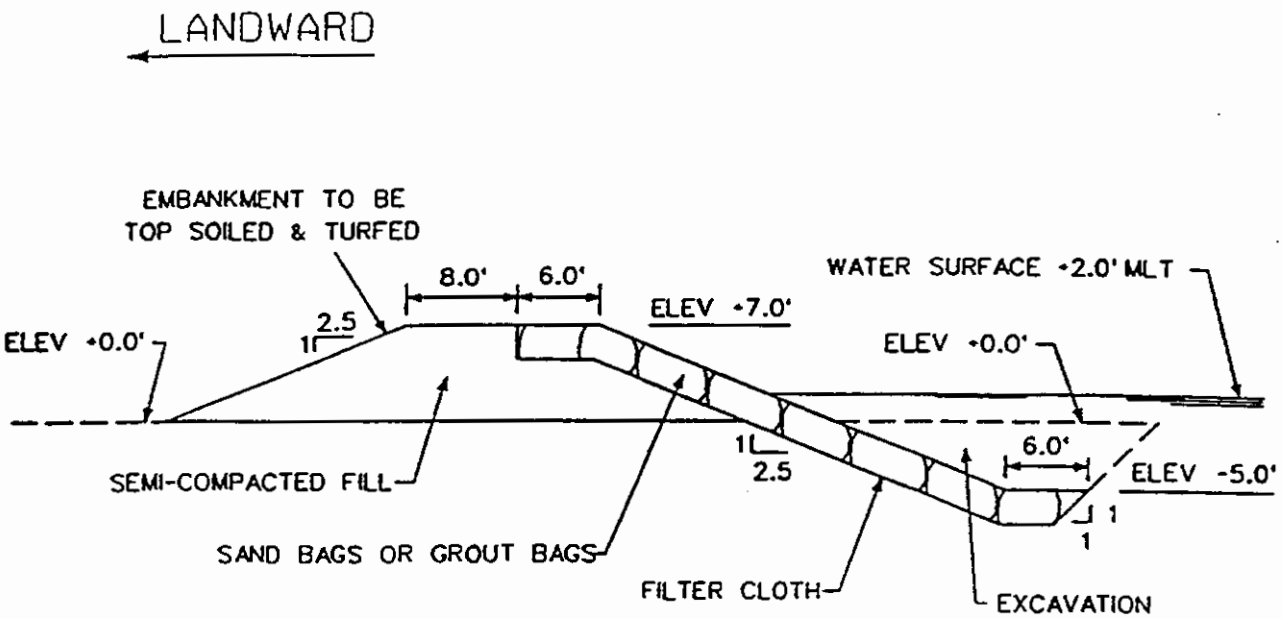

UNPROTECTED REACH

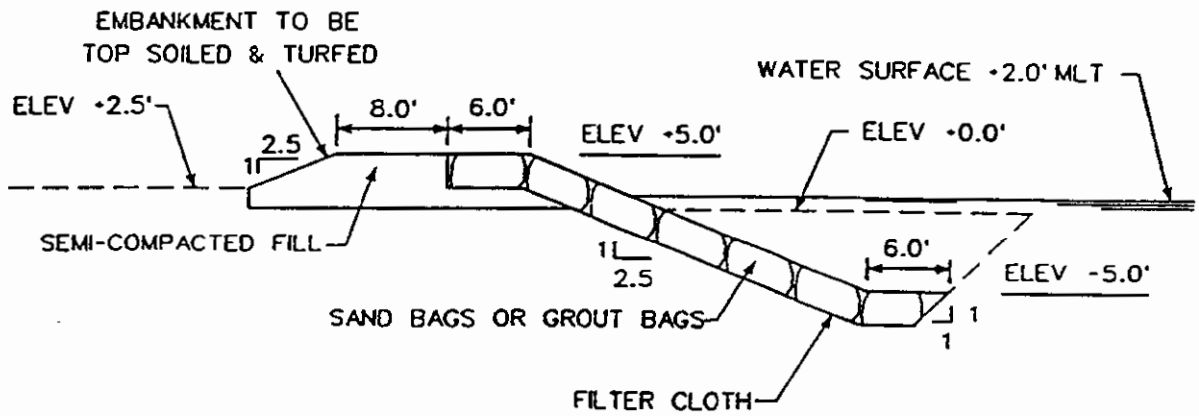

PROTECTED REACH

FIGURE 8
EMBANKMENT AND SAND OR GROUT BAGS

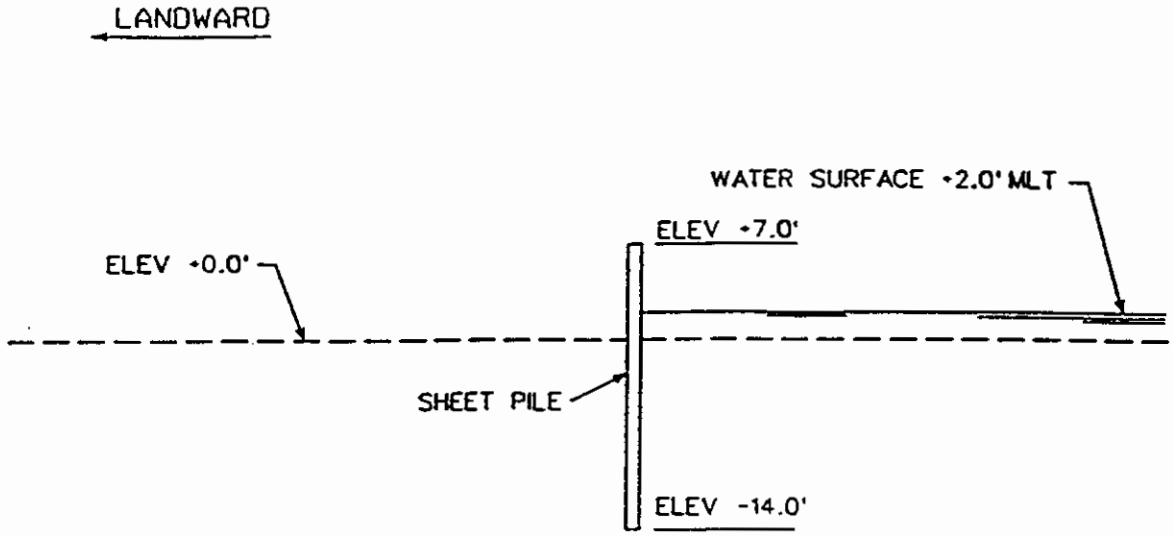

UNPROTECTED REACH

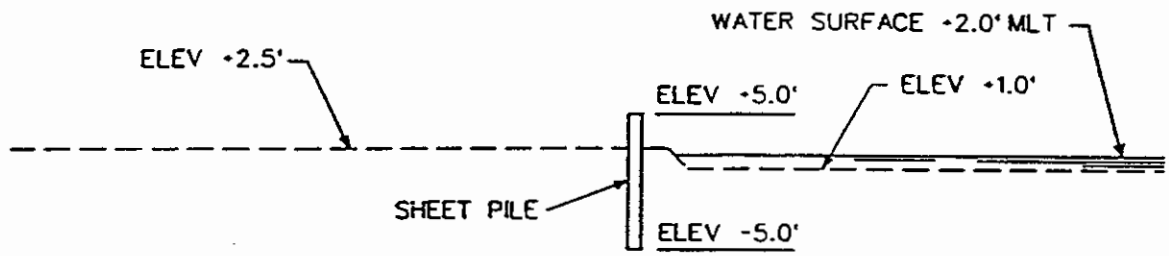

PROTECTED REACH

FIGURE 9
VERTICAL SHEETPILE WALL

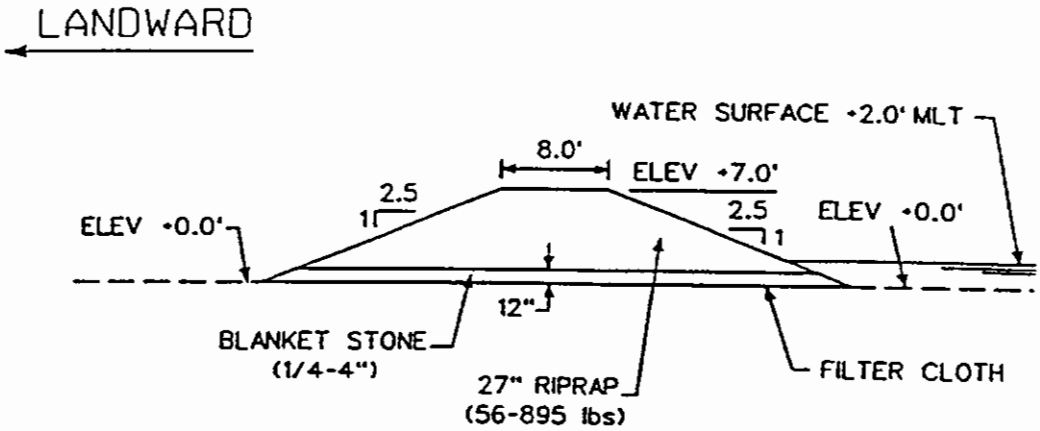

UNPROTECTED REACH

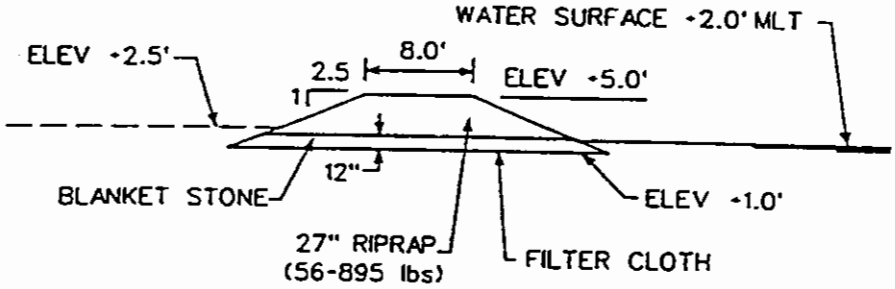

PROTECTED REACH

FIGURE 10
STONE PROTECTION

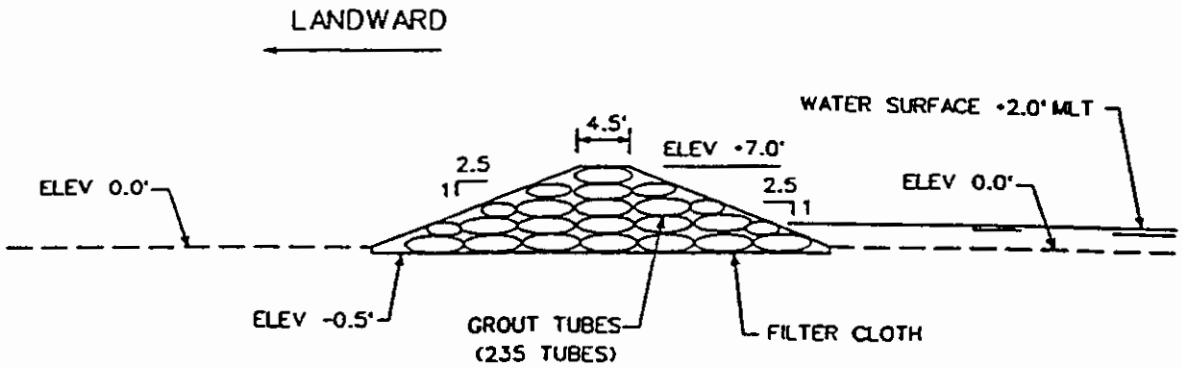

UNPROTECTED REACH

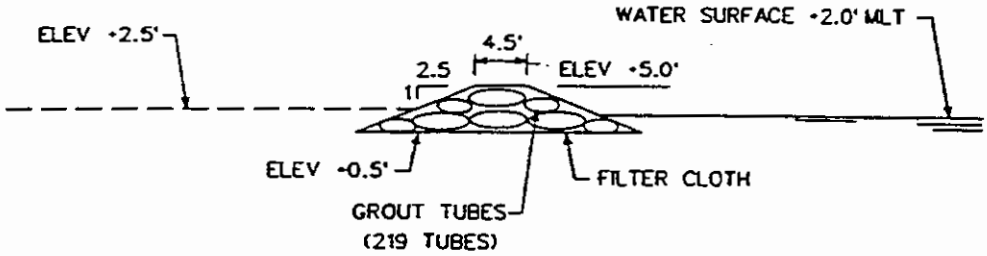

PROTECTED REACH

FIGURE 11
GROUT TUBES

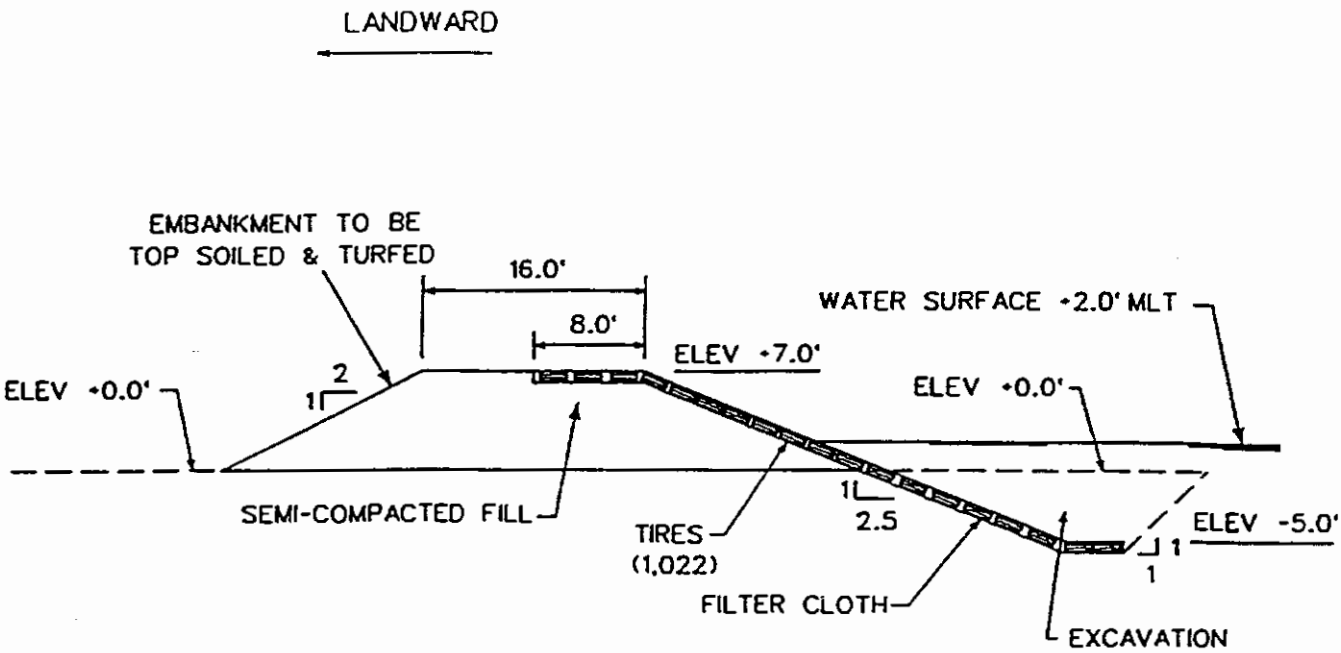

UNPROTECTED REACH

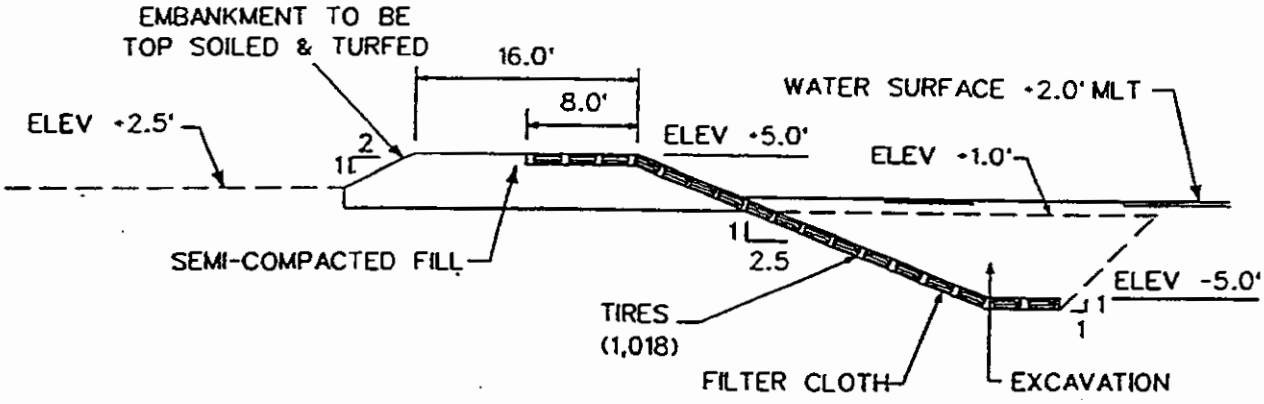

PROTECTED REACH

FIGURE 12
TIRE REVETMENT

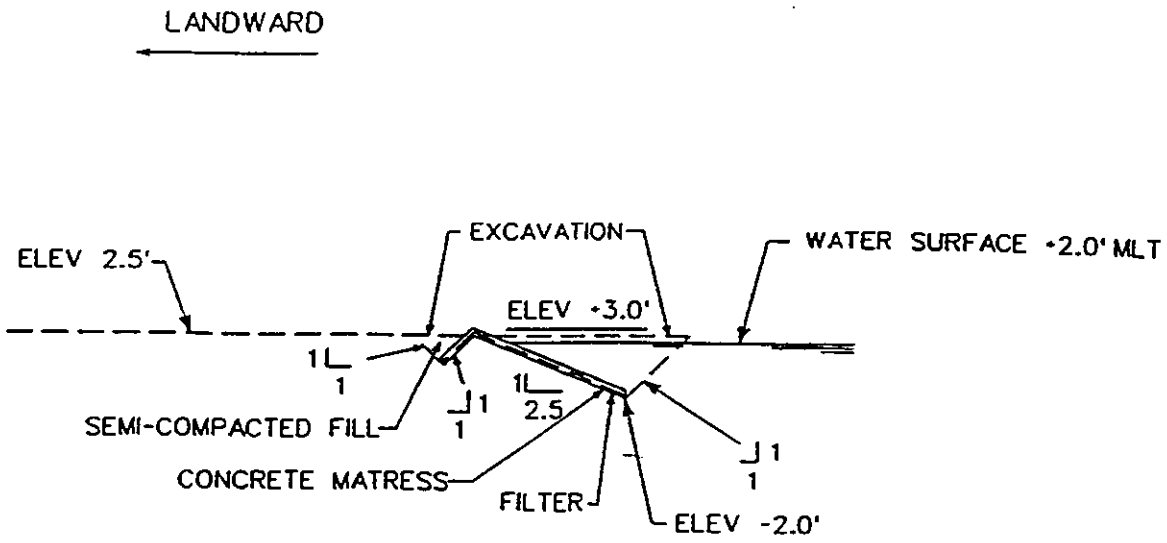

FIGURE 13
CONCRETE MATTRESS REVETMENT

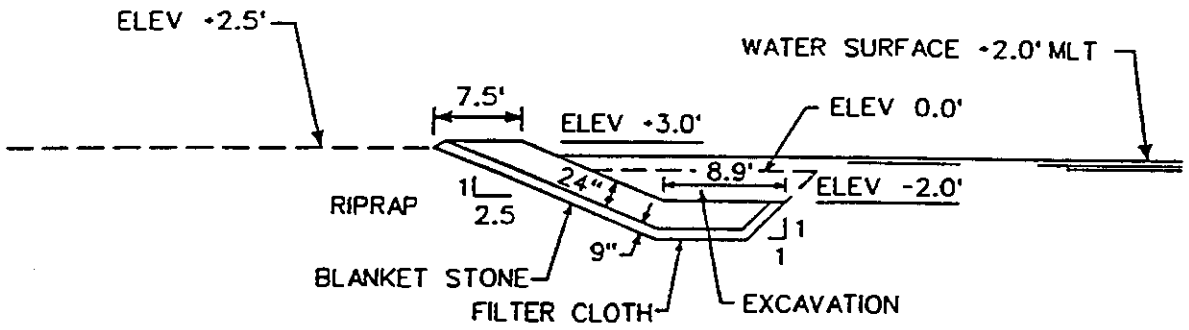

FIGURE 14
RIPRAP REVETMENT

TABLE 13
ADVANTAGES AND DISADVANTAGES OF STRUCTURES

Type of Structure	Advantages	Disadvantages
Embankment	No special equipment required for construction Environmentally attractive Uses local or in-place soil May serve as alternative to riprap	Expensive Erosion from wave attack Scour at toe Frequent maintenance Seepage through structure
Embankment & Stone Protection	Reduces wave action during normal conditions Low maintenance	Expensive Erosion from wave overtopping Displacement of stone from wave attack
Embankment & Gabions	No heavy equipment required for construction Easy to install Eesily repaired	Expensive Rusting of wire mesh Erosion from wave attack Frequent maintenance Vandalism Unsafe for foot traffic
Embankment & Sand or Grout Bags	No apecial equipment required for construction Eesily repaired Cen be placed on steeper slope than stone Uses locally available materials Ease of foot traffic	Expensive Send bags could tear Erosion from wave overtopping Vandalism Best suited as temporary emergency protection measure Short service life Unattractive Deterioration by sunlight
Vertical Sheetpile Wall	Prevents possible slope failure Reduces wave action Provides docking areas for vessels	Very expensive Damage from vessel traffic
Stone Protection	Reduces wave action May reduce shoaling of channel from littoral material Creates calm water in harbor area	Very expensive Displacement of stone from wave attack Hauling cost of materials
Grout Tubes	Oyster bed creation Reduces tidal influence in open bays Effective wave breakers	Expensive Difficult to handle Large voids within structure
Tire Revetment	Tires are readily available at most locations Tires can be obtained at reasonable costs Proven as effective in protecting streambanks from erosion Encourages growth of woody vegetation	Aesthetically displeasing Damage to filter fabric due to sunlight exposure Damage to filter fabric from wave forces Vandalism
Concrete Mat Revetment	Cost effective Allows flooding of marsh during high tides Approved by Aransas Refuge personnel Existing structure at refuge is performing satisfactorily	Special equipment required for construction Possible damage from boat traffic Possible undercutting at toe
Riprap Revetment	Effective method against erosion Used throughout the Galveston District	Expensive Displacement of stone from wave attack

barge tows and could quickly and easily be replaced. Another desirable environmental quality is that vegetation could quickly re-establish in the spaces between the individual concrete blocks. And finally, filter cloth would allow passage of water while retaining the soil, thereby reducing erosion and water turbidity resulting from wave attack.

OPERATIONAL OR OTHER CHANGES TO EXISTING CHANNEL

During coordination activities, several additional options to current navigation practices of the existing GIWW were discussed. These included widening the present channel from a 125-foot bottom width to a 175-foot bottom width, enforcing speed limits within the critical habitat boundaries, and restricting navigation to one-way traffic within the critical habitat.

The alternative of a 175-foot bottom width was evaluated as a means to increase the safety of the channel. The quantity of new work material would total about 1.8 million cubic yards. Additionally, the estimated maintenance quantities over the 50-year project life would increase by about 4 million cubic yards. This increase in dredged material would result in a need for larger marsh creation sites and/or confined disposal areas. This could also require additional levee elevations on the confined disposal areas which may not be feasible from an engineering or environmental perspective. Larger marsh sites may not be feasible because of poor foundation conditions within certain areas of the bays and impacts to adjacent oyster reefs.

Additionally, there is a concern that a wider channel, while increasing the safety margin of the existing GIWW by providing a greater distance between passing or meeting tows, could accommodate wider tow configurations, such as doubling up of barges (side-by-side). Accommodating wider tow configurations would negate any possible increased safety realized by the wider channel and could actually increase the hazard potential of the channel.

The options of one-way traffic and enforced speed limits are a Coast Guard responsibility. The one-way traffic option would increase the safety of the channel by reducing the risk of collision within the critical habitat. This would mean that a similar parallel channel would have to be constructed and maintained through this area which would be accomplished at significant increased cost and likely permanent damage to the critical habitat area. The alternative to the construction of another channel would be to hold vessels at either end to allow passage of vessels through the 31-mile reach of critical habitat. Inland tows travel at an average speed of about 5 miles per hour which translates into a travel time of at least 6 hours for a vessel to traverse the critical habitat. The delays experienced waiting for the channel to clear would be unacceptable to waterway users. The additional problem of

enforcement of the travel restrictions would add to the already significant costs of this option.

Enforcing speed limits so that vessels produce no wakes would decrease the channel bank erosion but there is an attendant sacrifice of control of the vessel with the decreased power which translates into an increased potential for accidents. Enforcement of the "no wake" restriction would entail significant costs because of the length of channel involved. Vessels other than commercial navigation traffic would also be subject to this restriction, adding to the enforcement problem. The Coast Guard has analyzed the one way traffic and "no wake" options and have concluded that these options are not feasible, mainly because of the difficult and time consuming process involved in designating the area as a Regulated Navigation Area (33 CFR 165.10-165.13) and the great length of channel which would have to be patrolled by a limited Coast Guard staff. Because of the Coast Guard's conclusion and the apparent minimal benefits which could be derived from the implementation of either of these two options, they were removed from further consideration.

INITIAL SCREENING

After the general screening discussed above, a two-phase screening process of the four basic structural alternatives began. Since benefits derived from implementation of the various structural plans are the same, average annual costs were used as the screening mechanism. All costs used in this screening were based on April 1993 price levels. To convert the first costs and maintenance costs to average annual equivalent costs, standard discounting techniques were employed using an interest rate of 8 percent.

Each of the alternatives were evaluated on the same reach of waterway between channel Stations 656+787 to 881+800. These stations are at or beyond the boundary of the critical habitat area. The new realignment channel plans have a project depth of 12 feet, a bottom width of 125 feet, an advance maintenance of 2 feet, and an overdepth of 0.5-foot for a total depth of 14.5 feet. The side slopes are 1V:5H for bay reaches and 1V:3H for land cut reaches.

All of the plans evaluated during this study would require periodic maintenance. No work is to be performed during the months when the whooping cranes are in the area, generally from mid-October to mid-April.

ALTERNATIVE 1 - NORTH ALIGNMENT

This realignment plan would relocate the GIWW outside of the critical habitat boundaries by dredging a new channel north of the Refuge and critical habitat boundaries. It would exit the existing GIWW at channel station 693+587 (channel mile 485.5) near Fulghum Camp and traverse westward across the prairie to San Antonio Bay just north of Mosquito Point. The channel would then cross San Antonio Bay to a point just north of Webb Point on the west side of San Antonio Bay. From this point, the GIWW would continue across the farmland just north of the ANWR until it nears Texas State Highway 35 northwest of Burgentine Lake. The channel would then parallel the highway just to the east until it crosses Cavasso Creek where it would turn slightly southeast to avoid the populated area of Holiday Beach and enter Aransas Bay between Holiday Beach and Goose Island State Park. Once in Aransas Bay, the channel would turn almost due south and pass near Fulton and Rockport to again intersect the existing GIWW near channel station 881+800 (channel mile 521.1) across from Key Allegro. The total length of this route would be 50.2 miles although only 43.2 miles of newly dredged channel would be required.

This alternative was divided into six reaches based on physical conditions and proposed dredging methods. All new-work and maintenance material for land cut reaches of the proposed channel would be contained in 14 new upland disposal areas. These 14 disposal areas include five disposal areas 125 acres each which would be used for Reaches 1 and 2 and nine disposal areas 100 acres each to be used for Reaches 4 and 5. For material dredged from Reach 3 across San Antonio Bay, two new upland disposal areas 435 acres each would be constructed on either side of the bay. All material dredged from Reach 6 within Aransas Bay would be placed into ten open bay unconfined disposal areas approximately 70 acres each. The new-work material would be mechanically excavated above +1.0-foot MLT elevation and hydraulically dredged below +1.0-foot MLT.

All of the confined disposal areas would have levees with 1V:3H side slopes and a 10-foot crown width. The maximum levee heights for the 50-year project life would range between 11 and 24 feet. Each confined disposal area would require a drop-outlet structure. These structures would have to be replaced twice and rehabilitated four times over the project life.

Table 14 shows the new-work and maintenance dredging quantities for each of the six reaches. Figure 15 shows the proposed alignment along with the proposed disposal areas.

Construction would indirectly affect Welder Flats by interrupting surface drainage from the north, which may alter salinity gradients in the intertidal and saline pothole region where

TABLE 14

ALTERNATIVE 1 - NORTH ALIGNMENT
NEW-WORK AND MAINTENANCE DREDGING QUANTITIES

REACH	NEW-WORK DREDGING QUANTITY (CY)	MAINTENANCE MATERIAL DREDGING RATE (CY/YR)	MAINTENANCE MATERIAL DREDGING FREQUENCY (YRS)
1	0	58,400	7.2
2	5,402,000	60,300	7.2
3	2,786,000	457,800	2.5
4	10,041,000	79,800	7.2
5	11,250,000	100,800	7.2
6	2,277,000	528,300	2.6
TOTAL	31,756,000	1,285,400	

the whooping cranes feed. The land cut across Blackjack and Lamar Peninsulas will cross a variety of habitats, including some fringing marsh, farmland, prairie, and oak motte. One of the most important habitats to the local wildlife that will be removed on Lamar Peninsula is the pothole-live oak community. It is not known what effect the GIWW will have on the water table that feeds the potholes near the proposed route. The direct impacts to significant habitat are estimated at 453 acres requiring mitigation of 568 acres. In addition, 4,325 acres of coastal prairie are impacted.

Costs

Table 15 shows the costs for Alternative 1 - North Alignment including contingencies. The initial construction period was estimated to be 4 years. The construction costs include costs for lands, easements, rights-of-way, relocations, levee construction, dredging, and material and labor costs required for the project. Average annual operation and maintenance costs were developed based on costs for maintaining the channel throughout the 50-year project life. The land-locked reaches of the channel would require maintenance dredging every 7.2 years while the reaches which pass across San Antonio and Aransas Bays would be maintained every 2.5 and 2.6 years, respectively.

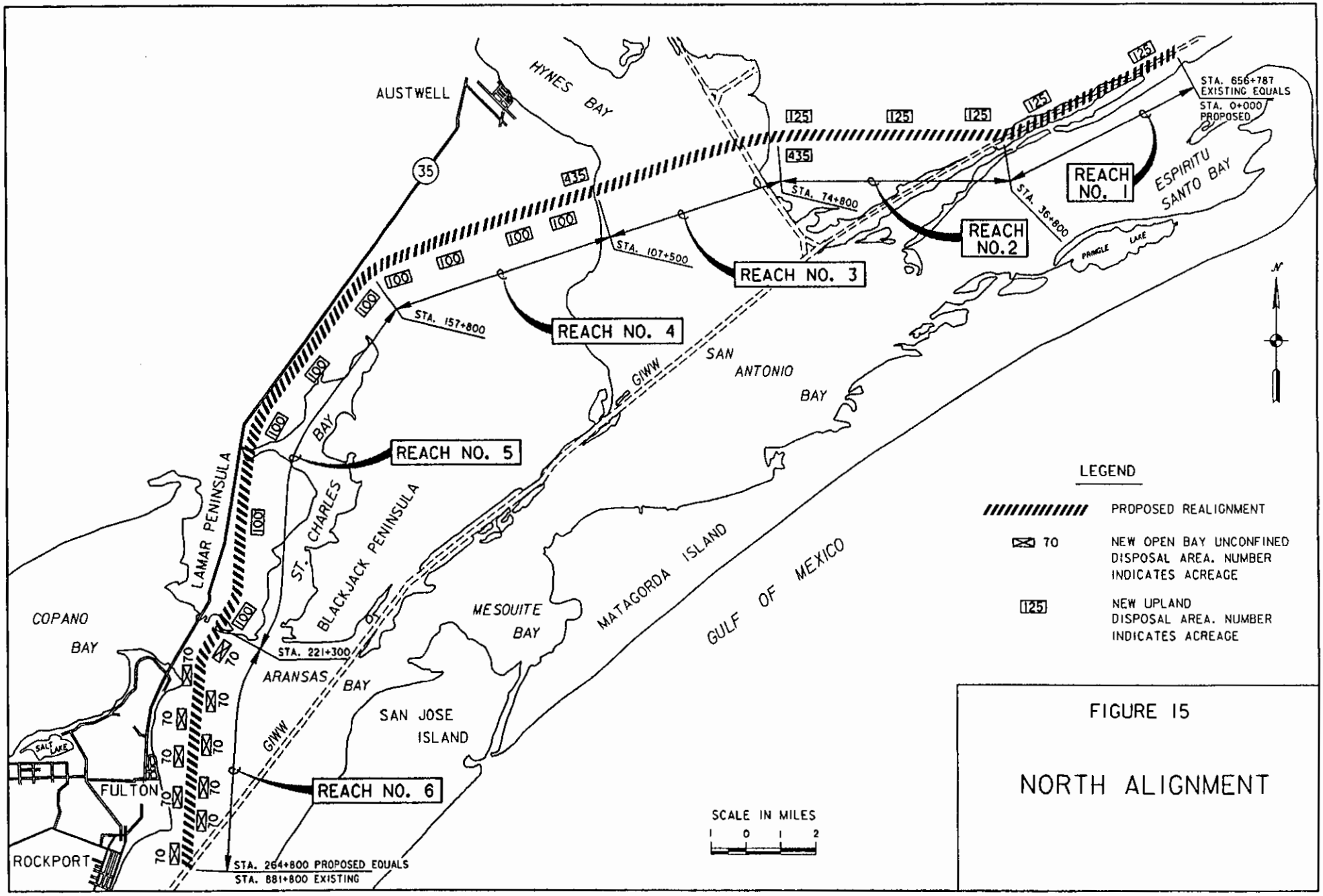

FIGURE 15

NORTH ALIGNMENT

TABLE 15

COST OF ALTERNATIVE 1 - NORTH ALIGNMENT

First Cost of Construction	$241,552,000
Interest During Construction	41,239,000
TOTAL INVESTMENT COST	$282,791,000
AVERAGE ANNUAL EQUIVALENT COSTS	
Interest and Amortization	$ 23,116,000
Operation and Maintenance	2,696,000
TOTAL AVERAGE ANNUAL COSTS	$ 25,812,000

ALTERNATIVE 2 - EXISTING CHANNEL WITH BANK PROTECTION

The channel reach included in this alternative extends 42.6 miles from Station 656+787 (channel mile 478.5) to Station 881+800 (channel mile 521.1). Approximately 31 miles of the GIWW in this alternative passes through whooping crane critical habitat. The proposed bank protection for areas inside the critical habitat would consist of articulated concrete mats and grout tube sections. Additionally, the maintenance material would be beneficially used to create marsh habitat.

The articulated concrete mats would be placed along the channel bank to protect the bank and marsh directly behind it from further erosion. The grout tubes would be used to construct a breakwater structure at Sundown Bay to protect the soft sediment of the bay bottom from wave scour while allowing continued circulation. Additionally, grout tubes would be placed in several locations to protect some of the beneficial use sites used to reduce the openings to adjacent bays and lakes. The plan was divided into four reaches for calculating quantities for the bank protection.

The articulated concrete mat revetment would consist of cabled concrete blocks placed on a 1V:3H slope. The bottom of the revetment would be placed at an elevation of -2.0 feet MLT and the top placed on the existing marsh at the top of bank at an approximate elevation of +3.5 feet MLT. The mats at the top of bank would be anchored to prevent slippage. The revetment would be placed on a finished excavated slope on top of a geotextile fabric which was designed for the project soil conditions. Material excavated while shaping the bank and during placement of the mats would be used to backfill the excavated areas.

Approximately 13,500 feet of grout tubes would be placed along several openings to small bays or marsh ponds to narrow the opening and decrease erosion. The largest grout tube structure would be used at Sundown Bay where a 10,900-foot long section of the bay paralleling the channel would be protected. The segmented breakwater would reduce wave scour and resuspension of soft bay sediments and would consist of ten 1,000-foot long grout tube sections with 100-foot wide gaps between each section. Each section would be six single nylon-woven fabric tubes filled with grout (a mixture containing 15 percent cement). The grout tubes would have a minimum compressive strength of 2,000 pounds per square inch. The section would be placed on a woven geotextile fabric over the bay bottom to protect against wave and current scour and minimize tube settlement.

This plan was divided into four reaches for calculating dredging quantities. These reaches are based on the physical environment and the disposal methods to be used. There would be no new-work dredged material taken from the existing channel. For screening purposes, it was assumed that levees for the beneficial use sites would be built during the construction phase. The initial construction would consist of placement of the concrete mats and grout tubes and construction of the levees for the beneficial uses sites. All maintenance material would be used to create beneficial use marsh sites and fill existing upland disposal sites. Figure 16 shows the existing channel alignment. Table 16 shows the maintenance dredging quantities.

Under this alternative there are no significant adverse impacts to sensitive habitat from construction of the project. As a result, there is no mitigation required. In addition, the beneficial uses disposal plan will result in the creation of 1,614 acres of marsh for the benefit of the whooping cranes and the environment in general.

Costs

Table 17 shows the costs for Alternative 2 - Existing Channel with Bank Protection including contingencies. The initial construction period was estimated to be 2 years. The construction costs include costs for lands, easements, rights-of-way, relocations, levee construction, and material and labor costs required for the project. Average annual operation and maintenance costs were developed based on costs for maintaining the project throughout the 50-year project life. This includes maintenance dredging of the land-locked reaches of the channel every 7.2 years while the reaches which pass across San Antonio and Aransas Bays would be maintained every 2.5 and 3.0 years, respectively. Additionally, the bank stabilization which includes the concrete mats and grout tubes would require maintenance every 10 years.

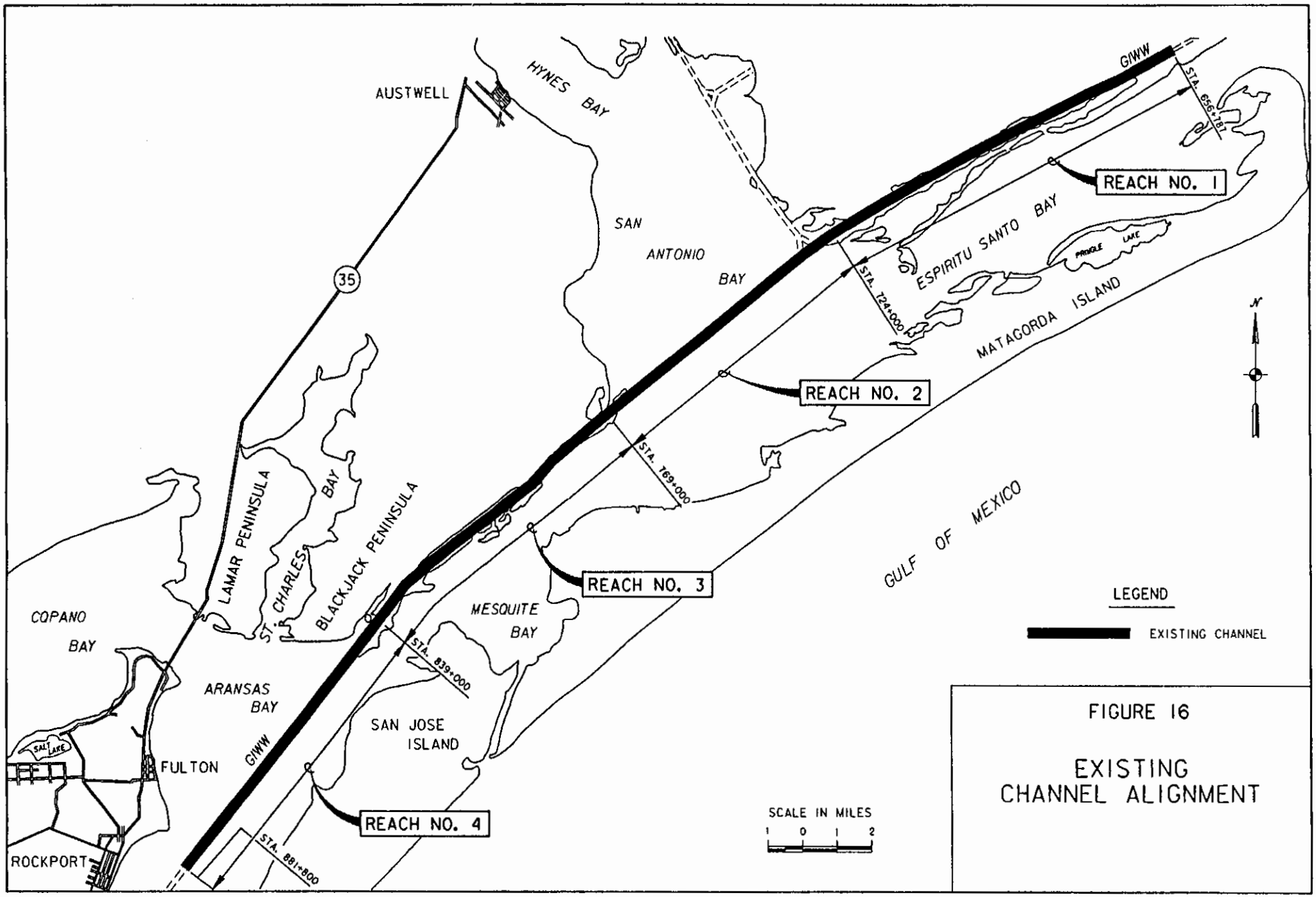

FIGURE 16

EXISTING CHANNEL ALIGNMENT

TABLE 16

ALTERNATIVE 2 - EXISTING CHANNEL
MAINTENANCE DREDGING QUANTITIES

REACH	DREDGING RATE (CY/YR)	FREQUENCY (YRS)
1	107,600	7.2
2	714,000	2.5
3	171,600	3.9
4	543,900	3.0
TOTAL	1,537,100	

TABLE 17

COST OF ALTERNATIVE 2 - EXISTING CHANNEL

First Cost of Construction	$74,569,000
Interest During Construction	6,025,000
TOTAL INVESTMENT COST	$80,594,000
AVERAGE ANNUAL EQUIVALENT COSTS	
Interest and Amortization	$ 6,588,000
Operation and Maintenance	2,316,000
TOTAL AVERAGE ANNUAL COSTS	$ 8,904,000

ALTERNATIVE 3 - OPEN BAY ALIGNMENT

This realignment alternative would follow the old channel alignment across the open bay system just south of the Refuge. This alternative would still be within the critical habitat of the whooping crane but outside of the Refuge boundaries. Since it would be located across open water, there would be no direct impacts to the whooping crane habitat, which is along the shorelines.

The realigned channel would exit the existing GIWW at channel mile 496 just south of Panther Reef and extend in a southwesterly direction through San Antonio Bay until it

enters Ayers Bay south of the Second Chain of Islands. It would turn slightly to the west to cut across Ayers Reef at Ayers Dugout. The channel would turn more westerly to cross Mesquite Bay and the reach between the Third Chain of Islands and Cedar Reef at Cedar Point off of Bludworth Island. After passing through Cedar Dugout, the channel would turn to the southwest to enter Carlos Bay and pass through Cape Carlos Dugout. After turning more to the west, the channel would enter Aransas Bay and intersect the existing GIWW near channel mile 515 just to the west of Jay Bird Point on St. Joseph Island. The total length of this alternative would be 43.9 miles with 18.6 miles of newly dredged channel.

This alignment was divided into 8 reaches for calculating dredging quantities. All new-work material would be deposited in existing confined disposal areas and used to construct two bird islands. Once the water has drained from these existing confined disposal areas, the areas would be degraded to a +5.0-foot MLT elevation and the material used to fill the existing channel up to 0.0 feet MLT.

Reach 1 would require no new work since it encompasses the portion of the existing channel near Welder Flats. The new work material from Reach 2 would be used to create a bird island on the south side of the channel in San Antonio Bay. Material from reaches 3 through 7 would be placed in existing confined disposal areas. Once the water has drained from these existing confined disposal areas, the areas would be degraded to a +5.0-foot MLT elevation and the material used to fill the existing channel up to 0.0 feet MLT. Material from Reach 8 would be used to create a 50-acre bird island located in Aransas Bay. Additionally, bank stabilization using concrete mats would be required in the Welder Flats area and in a reach along the Channel to Victoria since the existing GIWW would still be used through this area.

All maintenance material would be used to create beneficial use marsh sites, maximize capacity in existing confined disposal areas, and fill open bay disposal areas. In Reach 2, the maintenance material would be placed in existing open bay disposal areas within San Antonio Bay. Material from Reaches 3 through 7 would be used to create 12 beneficial use sites. Material from Reach 8 would be placed in existing open bay disposal areas within Aransas Bay.

Figure 17 shows the proposed alignment. Table 18 shows the new-work and maintenance dredging quantities.

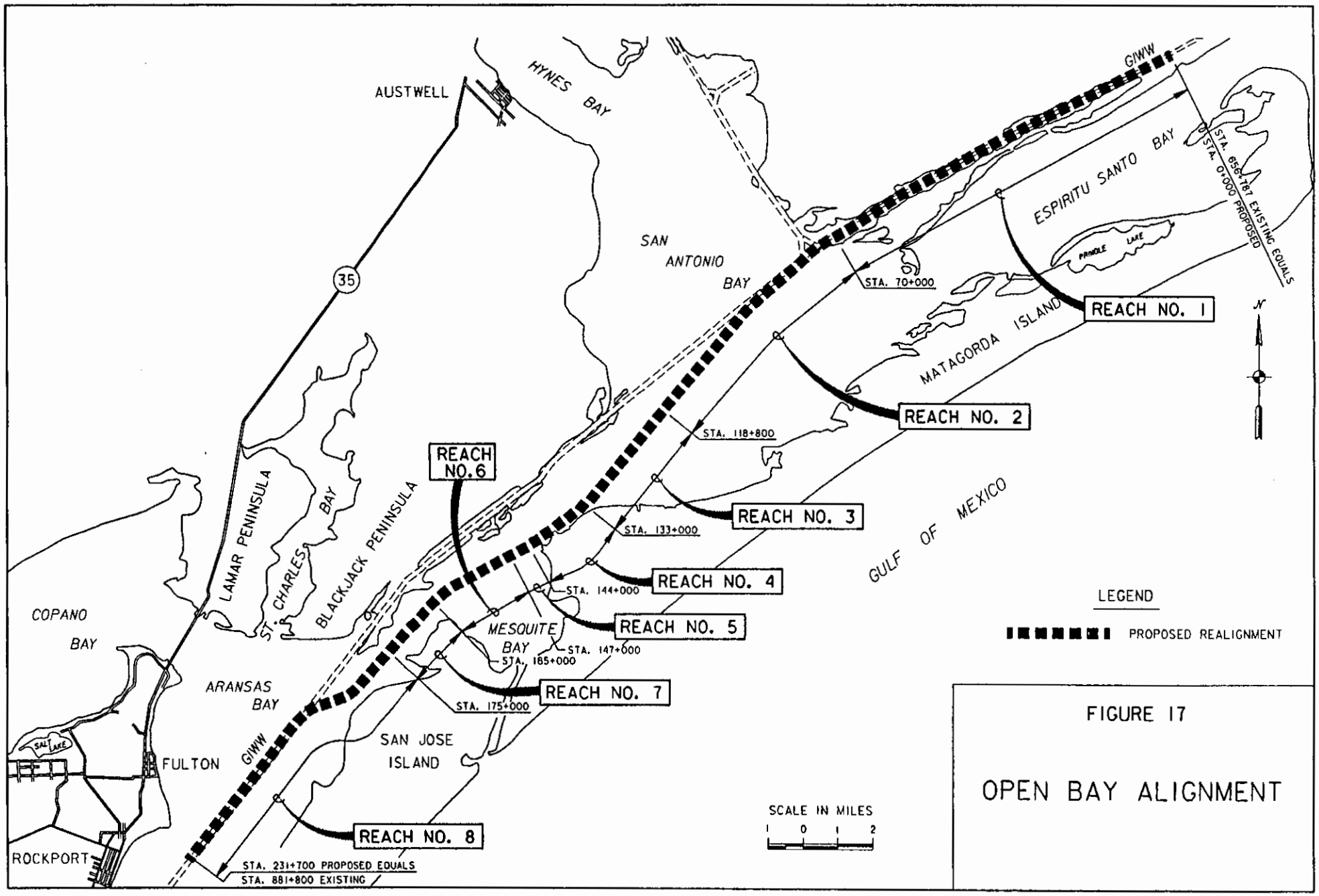

FIGURE 17

OPEN BAY ALIGNMENT

TABLE 18

ALTERNATIVE 3 - OPEN BAY ALIGNMENT
NEW-WORK AND MAINTENANCE DREDGING QUANTITIES

REACH	NEW-WORK DREDGING QUANTITY (CY)	MAINTENANCE MATERIAL DREDGING RATE (CY/YR)	MAINTENANCE MATERIAL DREDGING FREQUENCY (YRS)
1	0	107,600	7.2
2	1,500,000	749,700	3.0
3	1,100,000	84,000	3.0
4	1,000,000	66,000	3.0
5	400,000	18,000	3.0
6	1,600,000	120,000	3.0
7	900,000	78,000	3.0
8	1,544,000	558,000	3.0
TOTAL	8,044,000	1,781,300	

Under this plan 625 acres of bay bottom would be deepened and some areas of seagrass and oysters would be impacted. The greatest damage, however, may result from a change in the hydrology of the area. The channel would act as a funnel to move the freshwater quickly through the middle of the bays, interrupting the mixing process and possibly resulting in a loss of marsh in the bays, as well as reducing their value as a nursery for marine organisms and decreasing the food supplies available for whooping cranes and other predators in the area. It is estimated that 847 acres of habitat will be required for mitigation. The plan will result in the creation of 1,544 acres of marsh for the benefit of the whooping cranes and the environment in general.

Costs

Table 19 shows the costs for Alternative 3 - Open Bay Alignment including contingencies. The initial construction period was estimated to be 4 years. The construction costs include costs for lands, easements, rights-of-way, relocations, dredging, filling the existing GIWW, and material and labor costs required for the project. Average annual operation and maintenance costs were developed based on costs for maintaining the project throughout the 50-year project life. This includes maintenance dredging of the land-locked reach of

the channel near Welder Flat every 7.2 years while the remaining reaches which pass across open bays would be maintained every 3.0 years. Additionally, the bank stabilization for the concrete mats in Reaches 5 and 6 would require maintenance every 10 years.

TABLE 19

COST OF ALTERNATIVE 3 - OPEN BAY ALIGNMENT

First Cost of Construction	$129,132,000
Interest During Construction	22,045,000
TOTAL INVESTMENT COST	$151,177,000
AVERAGE ANNUAL EQUIVALENT COSTS	
Interest and Amortization	$ 12,358,000
Operation and Maintenance	3,485,000
TOTAL AVERAGE ANNUAL COSTS	$ 15,843,000

ALTERNATIVE 4 - BARRIER ISLAND ALIGNMENT

This realignment plan would also avoid the critical habitat and the Refuge by crossing Matagorda Island to the south of the present alignment. It would exit the existing GIWW near channel station 657+737 (channel mile 478.7) near the east end of Dewberry Island and cross Espiritu Santo Bay southeasterly to Matagorda Island just east of Vanderveer Island. The channel would turn southwest, traveling along the middle of the island and paralleling the Gulf shoreline until it reached Cedar Bayou. It would turn west to cross San Jose Island, entering Aransas Bay just south of Long Reef and Pauls Mott and intersecting the existing GIWW near channel mile 521.1 across from Key Allegro. The total length of this route would be 44.1 miles. The newly dredged portion of the channel would be 42.6 miles.

This plan was divided into 4 reaches. All new-work and maintenance material would be deposited along the surf zone of those portions of Matagorda and San Jose Islands impacted by the proposed channel. Disposal for the bay reaches would require long pumping distances to the Gulf of Mexico shoreline. The maintenance material would be pumped to the surf zone through 50-foot wide dredge pipeline corridors. The corridors for Reach 1 would be located at 8,000-foot intervals. For Reach 2, the pipeline corridor intervals would be 6,000 feet. In Reaches 3 and 4, pipelines would be placed 10,000 feet

apart. Additionally, this route would traverse an area that was formerly used as a gunnery and bombing range, and as a storage and disposal site of ordnances.

Table 20 shows the new-work and maintenance dredging quantities. Figure 18 shows the proposed alignment.

TABLE 20

ALTERNATIVE 4 - BARRIER ISLAND ALIGNMENT
NEW-WORK AND MAINTENANCE DREDGING QUANTITIES

REACH	NEW-WORK DREDGING QUANTITY (CY)	MAINTENANCE MATERIAL DREDGING RATE (CY/YR)	MAINTENANCE MATERIAL DREDGING FREQUENCY (YRS)
1	1,822,000	387,500	2.6
2	25,657,000	270,000	7.0
3	4,243,000	64,600	7.2
4	584,000	288,000	3.0
TOTAL	32,306,000	1,010,100	

Although this route is outside whooping crane critical habitat, it would directly impact a large area of environmentally sensitive habitat. Along with valuable seagrass and marsh habitat, the channel would cut through fresh to brackish wetlands on the barrier islands and directly remove over 1,500 acres of dune-brush- grassland habitat that adds diversity to the barrier island wildlife. Salt intrusion along the channel would indirectly impact any nearby fresh/brackish wetlands and eliminate or substantially diminish their flora and fauna, lowering the ecological diversity of the barrier island communities. An additional 742 acres of open water and wetland habitats also would be affected. An estimated 3,213 acres of habitat would be required for mitigation.

Costs

Table 21 shows the costs for Alternative 4 - Barrier Island Alignment including contingencies. The initial construction period was estimated to be 4 years. The construction costs include costs for lands, easements, rights-of-way, relocations, pipeline corridors, dredging, and material and labor costs required for the project. Additionally costs

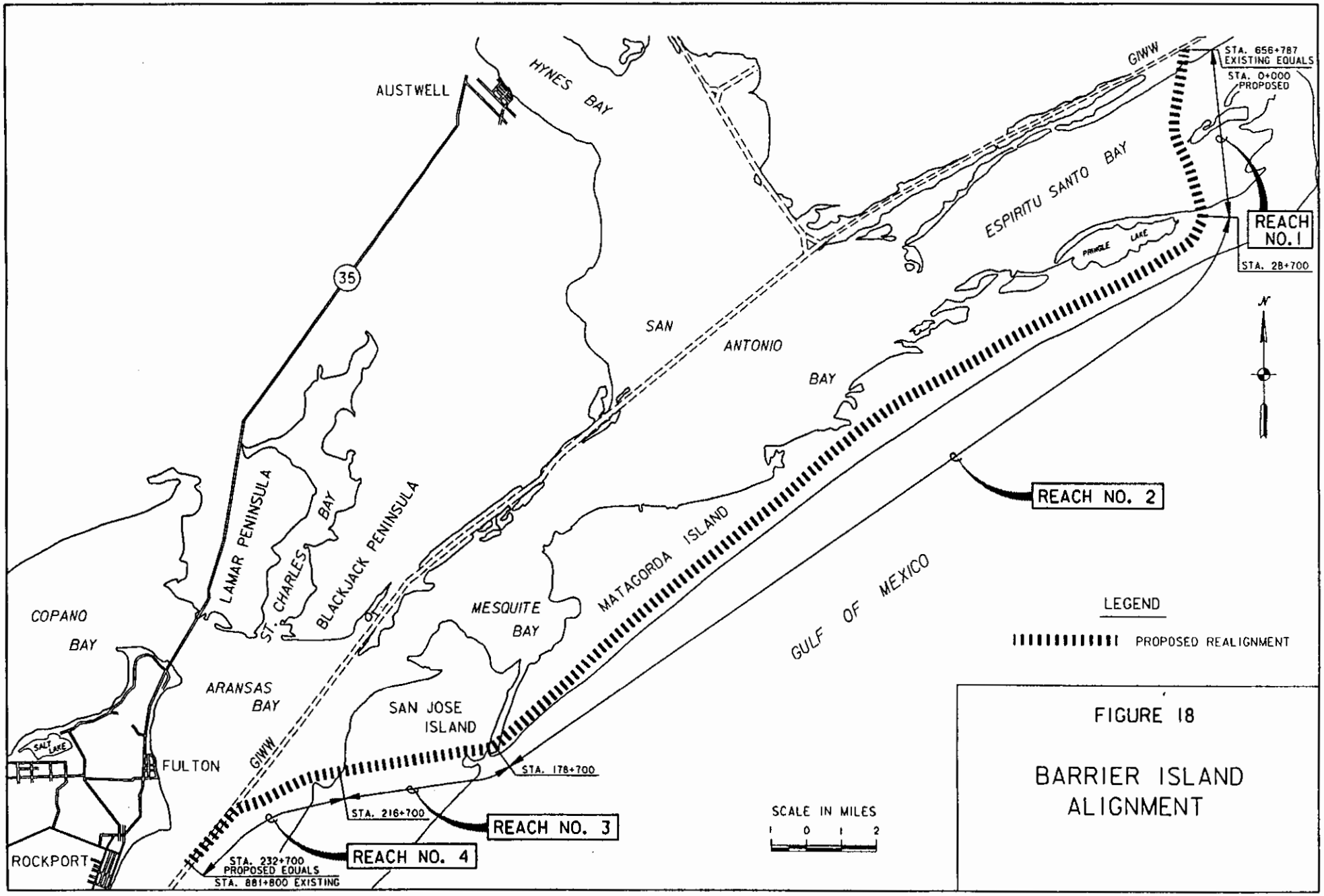

FIGURE 18

BARRIER ISLAND ALIGNMENT

TABLE 21

COST FOR ALTERNATIVE 4 - BARRIER ISLAND ALIGNMENT

First Cost of Construction	$201,985,000
Interest During Construction	34,482,000
TOTAL INVESTMENT COST	$236,467,000
AVERAGE ANNUAL EQUIVALENT COSTS	
Interest and Amortization	$ 19,329,000
Operation and Maintenance	2,287,000
TOTAL AVERAGE ANNUAL COSTS	$ 21,616,000

for removal and disposal of hazardous and toxic wastes were included. Average annual operation and maintenance costs were developed based on costs for maintaining the project throughout the 50-year project life. This includes maintenance dredging of Reaches 2 and 3 across the barrier islands every 7.0 and 7.2 years, respectively. Reaches 1 and 3 which pass across open bays would be maintained every 2.6 and 3.0 years, respectively.

COMPARISON OF PLANS

Each of the four plans described above would produce the same benefits, i.e., to move commodities through this reach in a safe and efficient manner. There are some unquantified differences between the plans from an environmental standpoint, generally in the area of spill probabilities and associated clean-up activities. These differences were not considered to be significant enough to be a factor in the screening process. The channel length differences between the four alternatives were also minor and did not influence screening. Dredged material placement costs were included for each of the plans and were based on preliminary beneficial uses of dredged material plans. Based on these criteria for the initial screening, the least costly plan was providing erosion control for the existing channel alignment.

For screening purposes mitigation costs were not included as a part of any of the plans. No mitigation measures would be required for Alternative 2, the existing channel alignment. Mitigation would be required as part of each of the other alternatives, increasing the costs of each of these.

Table 22 presents a comparison between the four plans discussed above. Although Alternative 2, the existing channel alignment, was by far the least costly plan, Alternative 3, the open bay alignment plan, was retained for further analysis during the final screening process upon recommendations during the coordination process. The open bay alignment plan was considered to have the advantage of moving the waterway traffic away from the primary feeding grounds of the cranes while reducing environmental impacts compared to the other rerouting alternatives.

TABLE 22

PLAN COMPARISON

ALTERNATIVE	CHANNEL LENGTH (MILES)	AVERAGE ANNUAL COSTS
1 - North Alignment	50.2	$25,812,000
2 - Existing Channel Alignment	42.6	$ 8,904,000
3 - Open Bay Alignment	43.9	$15,843,000
4 - Barrier Island Alignment	44.1	$21,616,000

FINAL SCREENING

Final plan screening involves retention of the nonstructural plan and a comprehensive comparison between the two surviving structural plans from the initial screening process. The results of this step will lead to the identification of the NED plan and the selected plan. The following comparison of the structural plans involves readily identifiable tangible costs for each plan as well as intangible benefits such as safety considerations.

During initial screening, a preliminary beneficial uses of dredged material disposal plan for each alignment was investigated to provide a basis for comparison of the alternative plans. This disposal plan consisted of the creation of beneficial use sites along the channel alignment to create habitat for the whooping crane, where practical. For the final screening, the investigation of other disposal plans is necessary because the objective of the final screening is to identify the most cost-effective plan. In addition to the beneficial use site disposal plan, other disposal options which were evaluated include offshore disposal and beach disposal.

For the offshore disposal option, the material would be removed from the channel using a clamshell dredge and placed in a barge. The barge would transport the dredged material along the GIWW to an offshore disposal site in the Gulf via the nearest entrance channel. The project area is situated almost equidistant between the Matagorda Ship Channel and the Aransas Pass Entrance Channels. Therefore, maintenance material from approximately half of the channel length would go to one entrance and maintenance material from the other half of the channel length to the other entrance, if all other considerations were the same.

The beach disposal option consisted of removal of material by hydraulic dredge and pumping the material through a pipeline to the Gulf shoreline. The material type could ultimately be a consideration for deposition on the beach if this option was used. Most of the maintenance material removed from this reach contains high percentages of silts and clays which are generally not acceptable for beach disposal applications.

The structural plans remaining from the initial screening process were the Existing Channel with Bank Protection and the Open Bay Alignment. Both of these plans are discussed below considering advantages and disadvantages, costs, environmental impacts, and specific topics pertinent to each plan type. The nonstructural plan will not be discussed further until final plan selection.

EXISTING CHANNEL WITH BANK PROTECTION PLAN

The bank protection plan would consist of articulated concrete mats, grout tube sections, and a 50-year dredged material disposal plan. The specific physical features of this plan are described in the "Initial Screening" section of this report (Alternative 2).

Advantages/Disadvantages

The advantages of this plan are that it would allow continued use of the waterway while protecting the critical habitat of the whooping crane, although the channel would still be located within the critical habitat. The bank protection would preserve the existing crane habitat by preventing continued erosion of the marshes used by the cranes.

Each of the disposal plans have both positive and negative impacts. The beach disposal and offshore disposal options would remove the material from within the critical habitat boundaries, thereby avoiding any impacts associated with the dredged material or its placement. However, both of these options are expensive because of the distance the material must be transported for disposal. For the offshore disposal option, the material

from Reaches 1 through 3 would be transported to the Gulf an average distance of 30 miles along the GIWW and out through the Matagorda Ship Channel while the material from Reach 4 will be hauled an average distance of 34 miles out through the Corpus Christi Ship Channel. For the beach disposal option, the material would be transported by pipeline to the beach a distance ranging between 4.5 to 6 miles.

Disposal near the channel is less costly but could impact the critical habitat. However, using the material to construct beneficial use sites would have a positive impact by creating additional marsh for whooping crane use or in providing protection against natural erosion occurring in areas outside of the immediate channel area.

Average Annual Costs

Table 23 shows a comparison of costs for this alternative for all three disposal options. These costs include the initial costs of construction and future maintenance costs. The construction costs include the costs of lands, easements, rights-of-way, relocations, and material and labor costs required for installation of the bank protection. Future maintenance costs involve the periodic addition of materials or repairs to the concrete mats and grout tubes and maintenance dredging of the channel throughout the project life. These costs are at April 1993 price levels.

TABLE 23

COST COMPARISON OF DISPOSAL OPTIONS
FOR THE EXISTING CHANNEL ALTERNATIVE

ITEM	BENEFICIAL USE PLAN	BEACH DISPOSAL PLAN	OFFSHORE DISPOSAL PLAN
Construction First Costs			
Bank Protection Cost	$32,191,000	$32,191,000	$32,191,000
Levee Construction Cost	42,378,000	---	---
Total Const. First Costs	$74,569,000	$32,191,000	$32,191,000
Interest During Const.	6,025,000	2,601,000	2,601,000
Total Investment Cost	$80,594,000	$34,792,000	$34,792,000
Average Annual Costs			
Amortization	$ 6,588,000	$ 2,844,000	$2,844,000
O&M	2,316,000	20,520,000	9,486,000
Average Annual Costs	$ 8,904,000	$23,520,000	$12,330,000

OPEN BAY ALIGNMENT

The proposed protection would consist of realignment of the GIWW along a historic channel alignment through the open bays south of the present channel. The specific features of this plan are described in the "Initial Screening" section of this report. The initial construction for this alignment would include bank protection of the Welder Flat area and dredging the new channel. The new work material would be placed in the existing disposal areas adjacent to the channel where it passes through the ANWR. Once the new channel has been completed and water has drained from these existing confined disposal areas, the areas would be degraded to a +5.0-foot MLT elevation and the material used to fill the existing channel up to 0.0 feet MLT.

Advantages/Disadvantages

The plan would allow for continued use of the waterway while protecting the critical habitat of the whooping crane from bank erosion associated with navigation traffic. However, the new channel would still be located within the boundaries of the critical habitat. Rerouting the channel through the open bay would distance the channel from the habitat used by the whooping crane, however any contaminant spill could still impact the critical habitat depending on the type, volume, and wind/current direction. Bank protection in the Welder Flats area would preserve the existing whooping crane habitat along the existing channel by preventing continued erosion.

The beach disposal and offshore disposal options would remove maintenance material from within the critical habitat boundaries, thereby avoiding any impacts associated with the dredged material or its placement. The new work material would be used to fill the existing GIWW. However, both of these options are expensive because of the distance the material must be transported for disposal. For the offshore disposal option, the material from Reaches 1 through 6 would be transported to the Gulf an average distance of 35 miles along the GIWW and out of the Matagorda Ship Channel while the material from Reaches 7 and 8 will be hauled an average distance of 39 miles out of the Corpus Christi Ship Channel. For the beach disposal option, the material would be transported by pipeline to the beach a distance ranging between 4 to 6 miles.

Disposal near the channel is less costly but could impact the critical habitat. However, using the material to construct beneficial use sites would have a positive impact by creating additional marsh for whooping crane use or in providing protection against natural erosion occurring in areas outside of the immediate channel area.

Average Annual Costs

Table 24 presents a comparison of costs for this alternative for all three disposal options. These costs include the initial costs of construction and future maintenance costs. The construction costs include the costs of lands, easements, rights-of-way, relocations, dredging the new channel, depositing the material in the existing disposal areas, filling the existing channel, and material and labor costs required for installation of the realignment. Future maintenance costs involve maintenance of the concrete mats and maintenance dredging of the channel throughout the project life. These costs are at April 1993 price levels.

TABLE 24

COST COMPARISON OF DISPOSAL OPTIONS
FOR THE OPEN BAY ALIGNMENT

ITEM	BENEFICIAL USE PLAN	BEACH DISPOSAL PLAN	OFFSHORE DISPOSAL PLAN
Construction First Costs			
Bank Protection/Filling			
Existing Channel Cost	$61,598,000	$61,598,000	$61,598,000
Levee Construction Cost	67,534,000	—	—
Total Const. First Costs	$129,132,000	$61,598,000	$61,598,000
Interest During Const.	22,045,000	10,517,000	10,517,000
Total Investment Cost	$151,177,000	$72,115,000	$72,115,000
Average Annual Costs			
Amortization	$12,358,000	$ 5,895,000	$ 5,895,000
O&M	3,485,000	14,543,000	10,530,000
Average Annual Costs	$15,843,000	$20,438,000	$16,425,000

PLAN COMPARISON

Table 25 shows a comparison between the various cost components and benefits for each of the plans investigated in detail, using the least-costly disposal option, the beneficial use plan. The average annual costs and benefits are developed using standard discounting techniques and an 8 percent interest rate, amortized over a 50-year project life period (2001 to 2051). The average annual operation and maintenance costs are added to the

TABLE 25

PLAN COMPARISON

ITEM	EXISTING ALIGNMENT (beneficial use plan)	BAY ALIGNMENT (beneficial use plan)
Construction First Costs	$74,569,000	$129,132,000
Interest During Const.	6,025,000	22,045,000
Total Investment Cost	$80,594,000	$151,177,000
Average Annual Costs		
Amortization	$ 6,588,000	$12,358,000
O&M	2,316,000	3,485,000
Average Annual Costs	$ 8,904,000	$15,843,000

amortized construction costs to yield the total average annual costs. The average annual benefits were developed from savings with the various plans in place when compared to the future without-project conditions.

From a strictly cost comparison standpoint, the existing alignment was shown to be the most cost-effective plan. However, other unquantifiable factors were still a concern to resource agency personnel. Therefore, an approach using a panel of experts covering the various areas of concern was used to judge relative safety and other intangible factors. The background and rationale for the use of this procedure, known as the Delphi Technique, is described below.

Delphi Technique

In June 1992, Gulf Engineers & Consultants, Inc. produced a report titled "Spill Contingency and Prevention Plan for the Gulf Intracoastal Waterway at the Aransas National Wildlife Refuge" as a part of this feasibility effort. This study examined the most likely and worst case spill scenarios of commodities transported in barge tows on the GIWW and the potential effects on the whooping crane and its habitat. A follow-on study to this 1992 study was completed in May 1994. This latter study evaluated the relative probability and effect of a contaminant spill in the existing channel alignment and an alternative open bay alignment southeast of the existing channel.

Because no large spills have ever occurred along the GIWW in the study area or along the Texas coast, with the exception of spills at docks, there is no basis for statistical comparison of land-locked and open bay navigation incidents that could cause a contaminant spill. Therefore, it was decided to use a qualitative approach to compare the existing route and alternative open bay routes. This was done by using the Delphi Technique, using a panel of knowledgeable experts from State and Federal resource agencies, navigation and shipping interests, regulatory agencies, spill response agencies, and the Corps of Engineers. This panel was asked to judgmentally determine the relative probability, probable locations, and most likely and worst case scenarios for a spill occurring along each of the routes.

One objective of the meeting was to look at an additional open bay alternative. The open bay plan which was evaluated in the earlier screening process consisted of an alignment which followed a previously dredged route of the GIWW. This alignment was evaluated because it limited the environmental impacts by crossing the reefs in the bays through the previously dredged cuts. This alignment, like the historical route, had several bends. During the Delphi panel meeting, the concern was raised that these bends would pose an unnecessary navigational risk. It was suggested that a route which was as straight as possible also be considered. Therefore, for the Delphi screening, a third, straighter alignment across the open bay was also considered.

Most of the panel judged the existing channel to be safer for navigation than either open bay route. The alternative consisting of two straight legs with a turn in Mesquite Bay was judged to have five to six times greater spill potential due to collision than the existing channel. The proposed alternative which followed the historic channel and made use of existing cuts through the reefs was judged to have a potential risk factor nine to ten times greater than the existing channel. It was agreed that clean-up would be more difficult in the open bay than in the existing channel, with the exception of a spill reaching the very shallow Sundown Bay which would cause severe impacts.

Most of the panel members felt that the existing alignment was the better alternative. As a result of the use of this panel technique, it was concluded that the best course of action was to continue to use the existing channel while seeking increased protection for the critical habitat, particularly in the Sundown Bay vicinity. Both studies mentioned above by Gulf Engineers and Consultants, Inc. are included in Appendix A.

Summary

Based on the cost comparison and findings of the Delphi panel, the existing alternative with bank protection was concluded to be the best structural plan.

Although a spill containment system would be required as part of either of these plans if implemented, this system was not included as part of either plan for screening purposes. This type of containment system would be similar for either alternative. However, with the open bay alignment, a spill would be more difficult to confine given the enormous area it could spread to. Therefore, for the open bay alignment, a spill containment system would have to cover more area and would be more costly. These extra costs for spill protection would increase the difference between the average annual costs for the two plans, resulting in the existing plan still being the most feasible of the two plans.

Similarly, mitigation cost was not included as part of either plan for screening purposes. No mitigation measures would be required for the existing channel alignment. Mitigation would only be required as part of the open bay alternative. These extra costs for mitigation would increase the difference between the average annual costs for the two plans, resulting in the existing plan still being the most feasible of the two plans.

SCREENING RESULTS

The nonstructural plan brought forward throughout the screening process consists of the utilization of the least costly alternate modes of transportation. The structural plan that survived the two-phase screening process and the qualitative Delphi approach is the existing channel alignment with bank erosion control.

Federal interest in solving the identified waterway problems of this project is established through the Endangered Species Act. Theoretically, no cost is too great to protect the continuing struggle for survival of the highly endangered whooping crane. In reality however, the Section 216 authority establishes Federal interest in the navigation project and defines limits for identifying the least costly method of transport. The limits for this project were defined by evaluating several construction alternatives as well as alternate modes of transport. Therefore, the cost limit that a recommended solution can have is established by the no action alternative. This would allow those industries dependant upon the waterway to either find an alternate means to move their products or cease operations for those products which require movement over the waterway.

The economic costs of the no action or nonstructural plan were based only on the cost of changing the mode of product movement, and did not include the cost of additional storage facilities or product loading or unloading facilities at the origin or destination, nor did it include any costs for improvements to rail or highway infrastructure necessary to handle the large increase in overland tonnages. Therefore, the nonstructural plan established the minimum NED benefit level for all alternatives which would be cost effective to keep the waterway open.

For the nonstructural plan, total shipping costs for shipping 14.4 million tons of commerce by the least costly alternate mode would amount to $141 million annually. These same commodities shipped by inland barge over the existing channel would amount to $95 million annually. This results in a savings of transportation costs of $46 million annually. The surviving structural plan consisting of the modification of the continued maintenance of the existing channel, installation of erosion control devices, and the implementation of a long-term beneficial uses of dredged material plan would amount to $8,904,000 annually.

SELECTED AND NATIONAL ECONOMIC DEVELOPMENT (NED) PLANS

For most feasibility studies, several alternative plans are developed and reviewed to determine which one best meets the project needs. As part of this review and selection process, an NED plan must be identified in accordance with the Water Resources Council's "Principles and Guidelines". Net economic benefits, the difference between average annual benefits and average annual costs, is an indicator of economic efficiency. The plan which provides for the maximum net benefits is the NED plan. The Federal objective is achieved in water resources planning by maximizing net benefits in plans that are consistent with protecting the Nation's environment.

However, the NED plan may not always be the selected plan. If the NED plan is not the selected or recommended plan, the reason for non-selection must be stated and an exception granted by the Assistant Secretary of the Army for Civil Works.

Using these economic criteria, the NED plan for the Aransas project is the selected plan which consists of the existing channel alignment plan with bank stabilization and spill containment features and a long-term dredged material management plan as described above. However, the NED plan is not the sole or even primary consideration for selecting the recommended plan in this unique situation. As explained above, protection of critical habitat for an endangered species as required by the Endangered Species Act is the primary justification for the selected plan. In this case, it is fortuitous that the NED and selected plans are the same.

The portions of this plan requiring Congressional authorization are the spill containment and the bank erosion control features. These features are referred to as the "selected plan". However, an integral and requisite feature to the overall operation and maintenance activities related to the GIWW in this area is a long-term dredged material disposal plan, because maintenance dredging will continue along with implementation of the recommended or selected plan. Although not requiring authorization, it is important to understand the relationship that the long-term disposal plan has with the authorized plan features. The following section is a discussion of the considerations and elements of the plan which will be implemented through the on-going operation and maintenance activities of the GIWW through this reach. Further discussion of the selected plan leading up to the report recommendations for Congressional authorization follows this section.

FIFTY-YEAR DREDGED MATERIAL DISPOSAL PLAN

As part of the overall analysis for evaluating impacts of continued maintenance of the GIWW through the critical habitat of the whooping crane, an integral part of the considerations was the future disposition of the maintenance material removed from the channel. The plan developed is referred to as the 50-year dredged material disposal plan or a long-term dredged material disposal plan. For planning purposes, the plan incorporates dredging requirements over a 50-year period beginning in 1998 and extending through 2048.

This plan is consistent with the recommendations of the plans developed as part of this study to provide protection to the critical habitat of the whooping crane, but does not require Congressional authorization since funding comes from Operations and Maintenance appropriations. The only requirement is that the plan comply with all environmental laws, comply with NEPA, and is consistent with policies related to protection of the critical habitat of the whooping crane. This process is expected to be completed in 1996.

The first step in the development of a long-term dredged material disposal plan has been to verify that the existing channel is economically feasible. This was accomplished prior to evaluating various alternative modifications to the existing channel as well as prior to developing the dredged material disposal plan. The economic analysis procedure was described in the "Benefit Analysis" section.

After developing alternative solutions and screening these potential solutions, a plan was ultimately selected along with the most cost-effective dredged material disposal alternative.

It basically consists of the beneficial use of dredged material to replace wetlands that have been previously lost through initial project construction and subsequent erosion.

This plan also represents the least costly alternative for disposal. By definition, this constitutes the base plan for this reach of the waterway which will be implemented solely by the Federal Government through the Operations and Maintenance program.

In developing the 50-year disposal plan for the selected plan, maintenance material would be used to fill the existing disposal sites and to create marsh through the beneficial use of dredged material. This would involve an on-going program as portions of this 31-mile reach through the critical habitat are dredged almost every year. Given the varying maintenance dredging cycles and the corresponding volumes of material available, levee building requirements and the acreage of marsh sites created in any given year varies. A summary of the beneficial use sites and their maximum probable sizes are included in Table 26.

TABLE 26

BENEFICIAL USE SITES

SITE	SIZE(ac)
A	392
B	407
C	43
D	90
E	147
F	96
G	24
H	10
I	222
J	148
K	35
Total	1,614

Each of the larger beneficial use sites were subdivided into cells that could be filled in one dredging cycle. This was to avoid a cell requiring several dredging cycles to reach the proper elevation for marsh grass to be established. Therefore, each cell would create a functional marsh unit with the material from a single dredging contract. The cells were

based on estimated dredging volumes to be pumped into the sites. During the project life, cell sizes may require adjustments based on the actual dredging quantities available during each cycle. Confining levees for the marsh cells will be constructed at the time of dredging so that cell size can be calculated based on the maintenance material available.

Based on the estimated shoaling rates, the disposal capacity of the beneficial use sites and the existing upland sites are sufficient for the quantity of dredged material estimated to occur over a 50 year period. The use of marsh sites would be maximized to reserve capacity in the upland sites. If shoaling increased due to a severe storm or if the material to be removed from the channel was contaminated during any cycle, capacity would be available in the upland sites to contain the contaminated or excess material.

Additionally, to maximize storage capacity and increase the chances for successful marsh creation, construction of the marsh sites and use of the upland sites would alternate between subsequent dredging cycles. One dredging cycle would place material in an upland site and the next cycle would use material to construct a beneficial use site. This sequencing would allow extra drying and compaction time for the material in the upland site, increasing the available capacity for its future use. The use of dewatering techniques to increase compaction will be studied during the Preconstruction Engineering and Design phase. The extra time between cycles in the beneficial use sites would also allow marsh plants to reach equilibrium and circulation channels to be built and attain functional capabilities before the next cell is added. This alternating method was utilized to the maximum extent possible. In the few instances where capacity was not available using both the upland site and nearby beneficial use sites, the nearest open bay site was used for the remainder of the material.

All remaining capacity of Disposal Areas (DA) 120, 120A, and 121 will be depleted prior to implementation of this 50-year disposal plan. These sites are located near the eastern end of the critical habitat. A new upland site will be used in place of DA 120 and 120A. This new upland area is the only new area included in this disposal plan. It is located outside the critical habitat boundaries. The material from the reach of channel which previously used DA 121 will be divided between beneficial use site "A" and existing open-bay DA 122. The locations of these disposal areas are shown on plates 2 through 12 in the Engineering Appendix (Appendix C).

Table 27 includes a summary of the dredging quantities, dredging frequencies, and disposal areas used in this 50-year disposal plan. Tables 28 through 31 shows the specific disposal areas and beneficial uses sites under each dredging cycle for each of the four reaches.

TABLE 27

DREDGING AND DISPOSAL SUMMARY

Reach	Location	Station	CY/Cycle	Disposal Area	Disposal Method	Interval (yrs)
1	Welder Flat	696+000 to 716+000	230,600	New Upland Site	Upland	7.5
		716+000 to 724+000	92,240	DA 122/Marsh	Open Bay/Marsh	
2	San Antonio Bay	724+000 to 730+000	210,000	Site A/DA 122	Marsh/Open Bay	2.5
		730+000 to 742+000	420,000	DA 122	Open Bay	
		742+000 to 750+500	297,500	DA 123	Open Bay	
		750+500 to 759+500	315,000	DA 124	Open Bay	
		759+500 to 769+000	175,000	DA 125	Open Bay	
3	ANWR	769+000 to 785+000	449,280	Marsh/DA 127	Marsh/Upland	4.0
		785+000 to 805+000	243,360	Marsh/DA 129	Marsh/Upland	
		805+000 to 815+000	121,680	Marsh/DA 130A	Marsh/Upland	
		815+000 to 830+000	182,520	Marsh/DA 130B	Marsh/Upland	
		830+000 to 839+000	368,550	Marsh/DA 131	Marsh/Upland	
4	Aransas Bay	839+000 to 843+000	126,000	DA 132	Open Bay	3.0
		843+000 to 853+000	315,000	DA 133	Open Bay	
		853+000 to 860+000	220,500	DA 134	Open Bay	

TABLE 28

DISPOSAL PLAN FOR MAINTENANCE MATERIAL
REACH 1 - STATION 696+000 TO STATION 724+000

Cycle	Year	Reach 1 Sta. 696+000 to Sta.716+000	Reach 1 Sta.716+000 to Sta. 724+000
CY/Cycle		230,600	92,240
1	2.5		
2	5.0		
3	7.5	New Upland Site	Site A Marsh, 18.5 ac
4	10.0		
5	12.5		
6	15.0	New Upland Site	DA 122
7	17.5		
8	20.0		
9	22.5	New Upland Site	Site A Marsh, 18.5 ac
10	25.0		
11	27.5		
12	30.0	New Upland Site	DA 122
13	32.5		
14	35.0		
15	37.5	New Upland Site	Site A Marsh, 18.5 ac
16	40.0		
17	42.5		
18	45.0	New Upland Site	DA 122
19	47.5		
20	50.0		

TABLE 29

DISPOSAL PLAN FOR MAINTENANCE MATERIAL
REACH 2 - STATION 724+000 TO STATION 769+000

Cycle	Year	Reach 2 Sta. 724+000 to Sta. 730+000	Reach 2 Sta. 730+000 to Sta. 742+000	Reach 2 Sta. 742+000 to Sta.750+500	Reach 2 Sta. 750+500 to Sta. 759+500	Reach 2 Sta. 759+500 to Sta. 769+000
CY/Cycle		210,000	420,000	297,500	315,000	332,500
1	2.5	Site A Marsh 42 ac	DA 122	DA 123	DA 124	DA 125
2	5.0	Site A Marsh 42 ac	DA 122	DA 123	DA 124	DA 125
3	7.5	DA 122	DA 122	DA 123	DA 124	DA 125
4	10.0	Site A Marsh 42 ac	DA 122	DA 123	DA 124	DA 125
5	12.5	Site A Marsh 42 ac	DA 122	DA 123	DA 124	DA 125
6	15.0	DA 122	DA 122	DA 123	DA 124	DA 125
7	17.5	Site A Marsh 42 ac	DA 122	DA 123	DA 124	DA 125
8	20.0	Site A Marsh 42 ac	DA 122	DA 123	DA 124	DA 125
9	22.5	DA 122	DA 122	DA 123	DA 124	DA 125
10	25.0	Site A Marsh 42 ac	DA 122	DA 123	DA 124	DA 125
11	27.5	Site A Marsh 42 ac	DA 122	DA 123	DA 124	DA 125
12	30.0	DA 122	DA 122	DA 123	DA 124	DA 125
13	32.5	DA 122	DA 122	DA 123	DA 124	DA 125
14	35.0	DA 122	DA 122	DA 123	DA 124	DA 125
15	37.5	DA 122	DA 122	DA 123	DA 124	DA 125
16	40.0	DA 122	DA 122	DA 123	DA 124	DA 125
17	42.5	DA 122	DA 122	DA 123	DA 124	DA 125
18	45.0	DA 122	DA 122	DA 123	DA 124	DA 125
19	47.5	DA 122	DA 122	DA 123	DA 124	DA 125
20	50.0	DA 122	DA 122	DA 123	DA 124	DA 125

TABLE 30

DISPOSAL PLAN FOR MAINTENANCE MATERIAL
REACH 3 - STATION 769+000 TO STATION 839+000

Cycle	Year	Sta. 769+000 to Sta. 785+000	Sta. 785+000 to Sta. 805+000	Sta. 805+000 to Sta. 815+000	Sta. 815+000 to Sta. 830+000	Sta. 830+000 to Sta. 839+000
CY/Cycle		449,280	243,360	243,360	365,040	368,550
1	4	Marsh, 90 ac Site D	Marsh, 49 ac Site E	Marsh, Sites G & H, DA 130A	Marsh, 37 ac Site I DA 130B	Marsh, Site K DA 132
2	8	DA 127	DA 129	—	—	DA 131
3	12	Marsh, 47 ac Site B, 43 ac Site C	Marsh, 49 ac Site E	Marsh, 24 ac Site F DA 130A	Marsh, 37 ac Site I DA 130B	Marsh, 74 ac Site J
4	16	DA 127	DA 129	—	—	DA 131
5	20	Marsh, 90 ac Site B	Marsh, 49 ac Site E	Marsh, 24 ac Site F DA 130A	DA 130B	Marsh, 74 ac Site J
6	24	DA 127	DA 129	—	—	DA 131
7	28	Marsh, 90 ac Site B	DA 129	Marsh, 24 ac Site F DA 130A	DA 130B	Marsh, 74 ac Site I
8	32	DA 127	DA 129	—	—	DA 131
9	36	Marsh, 90 ac Site B	DA 129	Marsh, 24 ac Site F DA 130A	DA 130B	Marsh, 74 ac Site I
10	40	DA 127	DA 129	—	—	DA 131
11	44	Marsh, 90 ac Site B	DA 129	DA 130A	DA 130B	DA 132
12	48	DA 127	DA 129	—	—	DA 131
13	52	DA 127	DA 129	DA 130A	DA 130B	DA 131

Final approximate levee heights at end of project:

DA 127: +36
DA 129: +30
DA 130A: +31
DA 130B: +26
DA 131: +31

TABLE 31

DISPOSAL PLAN FOR MAINTENANCE MATERIAL
REACH 4 - STATION 839+000 TO STATION 860+000

Cycle	Year	Sta. 839+000 to Sta. 843+000	Sta. 843+000 to Sta. 853+000	Sta. 853+000 to Sta. 860+000
CY/Cycle		126,000	315,000	220,500
1	3	DA 132	DA 133	DA 134
2	6	DA 132	DA 133	DA 134
3	9	DA 132	DA 133	DA 134
4	12	DA 132	DA 133	DA 134
5	15	DA 132	DA 133	DA 134
6	18	DA 132	DA 133	DA 134
7	21	DA 132	DA 133	DA 134
8	24	DA 132	DA 133	DA 134
9	27	DA 132	DA 133	DA 134
10	30	DA 132	DA 133	DA 134
11	33	DA 132	DA 133	DA 134
12	36	DA 132	DA 133	DA 134
13	39	DA 132	DA 133	DA 134
14	42	DA 132	DA 133	DA 134
15	45	DA 132	DA 133	DA 134
16	48	DA 132	DA 133	DA 134
17	51	DA 132	DA 133	DA 134

COST SUMMARY OF FIFTY-YEAR DISPOSAL PLAN

As described previously, the 50-year dredged material disposal plan developed for this area is the least costly and most environmentally acceptable means of placement of channel maintenance materials. Therefore, by definition, it will become the base plan after coordination and final approval of the Environmental Impact Statement. Additional coordination on specific design and operation details will be accomplished with the State and Federal resource agencies by forming an Interagency Coordination Team (ICT). The ICT will review and make recommendations for the location and size of the beneficial use sites and will closely monitor construction, filling, and planting of the sites. The National Marine Fisheries Service (NMFS) will monitor the development of the marshes and make recommendations for modifying the sites, if needed, to increase viability. The disposal plan will be funded through annual Operations and Maintenance appropriations for the GIWW.

The average annual costs for implementation of the long-term dredged material plan were computed to be $4.6 million using a discount rate of 7.75 percent. These costs were derived by using standard economic discounting techniques, taking into account the various dredging frequencies and volumes for different reaches of the segment through the critical habitat and the timing of the building of levees, marsh creation, and other plan features.

The USCE obtained a perpetual disposal easement along the GIWW in the Welder Flats area prior to construction start in 1938. Therefore, the State of Texas, as the local sponsor, will not have to acquire the 153 acres of land near Welder Flats for the new upland disposal area and pipeline corridor. The State has the option of acquiring a more modern easement if it so desires, however the existing easement is deemed to be sufficient.

ENVIRONMENTAL EFFECTS OF FIFTY-YEAR DISPOSAL PLAN

The 50-year disposal plan will beneficially use the dredged material from the GIWW to create about 1,614 acres of new marsh inside the critical habitat. The new marsh will be closely monitored by the NMFS to ensure functional equivalency to surrounding marsh and is expected to benefit many estuarine species which are dependent on the marsh, such as redfish, shrimp, trout, and blue crab. Many wading and shore birds that use the marsh for feeding, sanctuary, and nesting also will benefit from any expansion of their habitat. Environmental effects of the 50-year disposal plan are discussed in the Environmental Impact Statement.

DESCRIPTION OF SELECTED PLAN

This section describes the physical components of the selected plan including initial construction and future maintenance activities; the accomplishments of the plan; and the various economic, environmental, and social effects of the plan. It incorporates only those features that require Congressional authorization.

PLAN COMPONENTS

The selected plan for the continued movement of commodities through the study reach consists of erosion control and spill containment features along the reach of the GIWW passing through the whooping crane critical habitat. This section of the report summarizes the plan components, whereas more detailed descriptions are included in the Engineering Appendix (Appendix C). Details of the real estate requirements for the selected plan are included in Appendix D.

SPILL CONTAINMENT COMPONENTS

To address the study objective of protecting and preserving the critical habitat of the whooping crane, engineering analyses have been conducted to develop a spill containment system for the more vulnerable areas through the study reach. This system consists of permanent supports for the attachment of spill containment booms, particularly across the openings of shallow bays which open into larger areas of marsh which could be damaged by a spill. These supports would consist of piles equipped with vertically adjustable hooks for installing the booms at the desired elevation, depending on water level at the time. The spill containment booms would be stored at the Refuge to allow for timely deployment.

BANK EROSION PROTECTION

The articulated concrete mats will protect approximately **62,000** feet of shoreline throughout the critical habitat of the whooping crane. This total represents the remaining shoreline in the critical habitat to be protected after 1997 (Table 32). Shore protection placed prior to construction of this project will be incorporated into the final plan. This project will not protect any shoreline along the GIWW outside the critical habitat. Additional protection consisting of grout tubes will be used to protect three small marsh areas to be built on dredged material deposited to constrict large openings in McMullen Lake and Sundown Bay along the GIWW, close off openings between the GIWW and adjacent

TABLE 32

LENGTH (FEET) OF SHORELINE ALONG THE GIWW INSIDE THE WHOOPING CRANE CRITICAL HABITAT THAT HAS BEEN OR WILL BE PROTECTED BY CELLULAR CONCRETE MATTRESS

Year	Construction Completed by O&M	Mat to be Constructed by O&M	Recommended Construction in Feas. Rep.	TOTAL
1992	1,968	-	-	1,968
1993	7,000	-	-	7,000
1994	6,967	-	-	6,967
1995	1,750 (Approx.)	-	-	1,750
1996	-	2,000	-	2,000
1997	-	2,000	-	2,000
1998	-	-	44,250 Refudge	44,250
1999	-	-	17,870 — Pri vate	17,870
TOTAL	17,685	4,000	62,120	83,805

waters, and protect Sundown Bay from wave impacts while still allowing circulation in the bay. The protection across Sundown Bay consists of 10 sections of 1,000-foot long grout tube breakwaters with 100-foot gaps between each section. The total length of grout tubes being used for erosion control is 10,500 feet. Table 33 shows the locations of the concrete mats and grout tubes. A cross section of the concrete mats and grout tubes is included in Figure 19.

The design for the concrete mat component of the selected plan is based on experience gained from three previous contracts completed within the Refuge. Design elevations for these contracts varied from +2.0 to +3.5 feet MLT for the crest and 0.0 to -2.0 feet MLT for the toe. For the purpose of developing quantities for the cost estimates, a uniform crest elevation of +2.5 feet MLT and a toe elevation of -1.0 feet MLT were used. The actual installation would be at the existing grades of the GIWW bank to minimize earthwork requirements.

TABLE 33
LOCATION OF BANK PROTECTION

TYPE OF STRUCTURE	AREA	LOCATION GIWW STATION		GIWW STATION
	WELDER FLAT AREA			
Concrete Mats	North side of GIWW	710+102	to	715+743
		715+860	to	716+275
		716+500	to	718+408
		718+710	to	721+345
	CHANNEL TO VICTORIA AREA			
Concrete Mats	4,150 feet along northeast side of Channel to Victoria			
	ARANSAS REFUGE AREA			
Concrete Mats	North side of GIWW	769+723	to	775+672
		778+050	to	778+584
		778+950	to	791+600
		791+850	to	792+710
		792+910	to	796+000
Grout Tubes	Mustang Lake - Site C	777+148	to	777+588
	North of Sundown Bay	791+600	to	791+850
	North of Sundown Bay	792+710	to	792+910
Concrete Mats	South side of GIWW	786+055	to	786+505
		786+615	to	788+925
		789+130	to	789+650
		796+000	to	799+530
		799+775	to	807+250
Grout Tubes	Across Sundown Bay	796+000	to	797+000
		797+100	to	798+100
		798+200	to	799+200
		799+300	to	800+300
		800+400	to	801+400
		801+500	to	802+500
		802+600	to	803+600
		803+700	to	804+700
		804+800	to	805+800
		805+900	to	806+900
Grout Tubes	Sundown Bay - Site G	807+465	to	809+432
	Sundown Bay - Site H	815+205	to	815+840
Concrete Mats	North side of GIWW	812+482	to	813+567
		816+746	to	817+570
		819+500	to	819+774
		822+725	to	822+803
		822+854	to	823+413
		825+814	to	826+469
		826+551	to	826+685
		827+128	to	827+390
		828+050	to	829+123

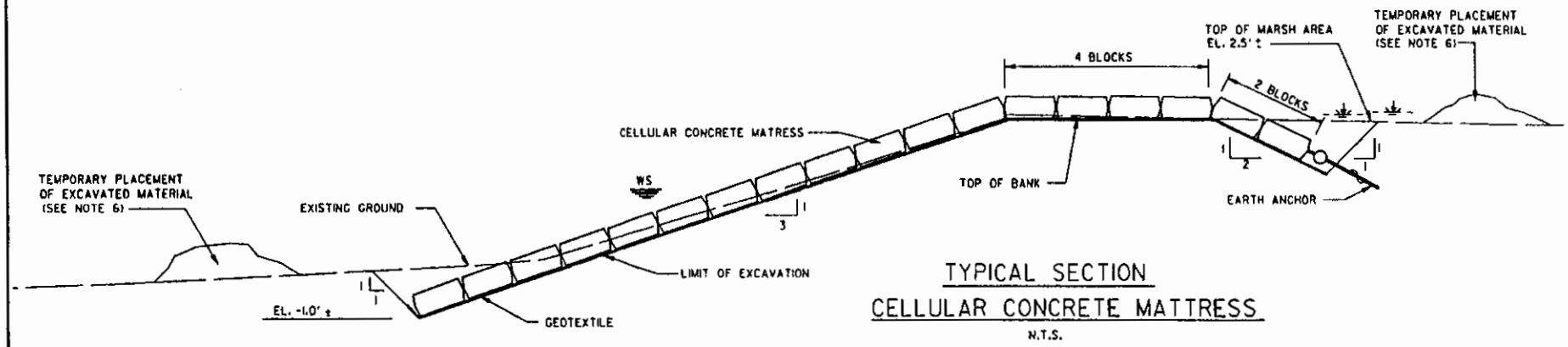

TYPICAL SECTION
CELLULAR CONCRETE MATTRESS
N.T.S.

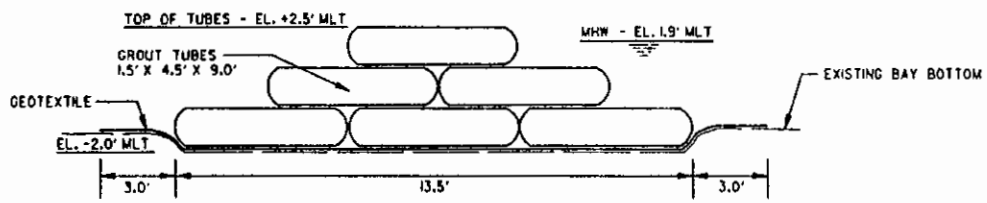

TYPICAL SECTION
GROUT TUBES
N.T.S.

FIGURE 19

EROSION PROTECTION
TYPICAL SECTIONS

PLAN CONSTRUCTION

The selected plan, consisting of bank erosion control and spill containment measures, is planned over a three-year period in four separate segments. Implementation of these plans is scheduled for the construction window (the period from mid-April to mid-October when the whooping cranes have left the area) beginning in 1998 and completing in 2000. The first segment to be completed would be bank erosion measures through the Aransas National Wildlife Refuge. The second segment would be completion of bank erosion measures for the Welder Flats area.

The third and fourth components would be installed in the year 2000. The third component would consist of the installation of supports for the attachment of spill containment booms and the purchase of necessary spill containment equipment for the reach of waterway crossing the critical habitat. The remaining project feature would be the installation of the grout tube breakwaters across Sundown Bay as described above.

COST SUMMARY OF SELECTED PLAN

There are two cost values associated with the selected plan. The economic cost is used to compare alternative plans, to compute benefit to cost ratios, and to allocate costs between project purposes. Constant dollars are used for these cost analyses because it is impossible to accurately predict the impact of inflation on benefits and costs through the 50-year period of economic analysis. For the recommended plan, the economic cost is estimated to be $19,759,000 which consists of the total project cost of $17,819,000 and interest during construction of $1,940,000. These values are based on an interest rate of 7.75 percent and October 1994 price levels. These costs include detailed design costs and the bank protection and spill containment components (Table 34).

The fully-funded total project cost is the estimated cost to actually construct the project; therefore, it anticipates that inflation will occur over the 3-year construction period. This estimate considers how the construction is divided into contracts, the time period for each contract, and the estimated cost for each contract. The fully-funded total project cost estimate for the recommended plan is $20,420,000.

This total project cost for the selected plan is significantly less than the project costs evaluated in the earlier screening process. More detailed information on the selected plan was developed after the screenings were complete, particularly through the experience gained in three shoreline contracts which allowed a reduction in the contingency factors, resulting in a significant cost decrease.

TABLE 34

COST ESTIMATE OF THE SELECTED PLAN
EXISTING CHANNEL WITH BANK PROTECTION
OCTOBER 1994 PRICE LEVELS

ACCOUNT CODE	ITEM	TOTAL
01	Lands and Damages	$ 166,000
10	Breakwaters	4,476,000
16	Bank Stabilization	10,852,000
30	Engineering and Design	1,787,000
31	Construction Management	538,000
	Total Project Cost	$17,819,000

Additionally, many items related to construction of the beneficial use sites were included in the project first cost during the screenings. Current Corps of Engineers guidelines indicate that these costs be considered O&M costs. Therefore, these costs are included as O&M costs as discussed in the previous section of this report, "Fifty-year Disposal Plan". Table 35 shows the cost summary for the selected plan. Refinement of the selected plan resulted in the initial construction period increasing to 3 years. Although distribution of the costs is different than that in the earlier screenings, the average annual costs for this plan have not increased over the costs used during the screening to select the plan. These costs have actually decreased because of decreases in the interest during construction and amortization of the costs. Therefore, this plan would still have been the selected plan if this cost distribution between construction costs and O&M costs had been used during the screening.

DESIGN AND CONSTRUCTION CONSIDERATIONS

Future design activities could lead to some modification to the details of the plan as described above. Foundation conditions in specific areas may require modifications during final plan development. A detailed spill containment deployment plan will be developed in coordination with Refuge personnel, the Coast Guard, and the TGLO.

TABLE 35

COST SUMMARY FOR SELECTED PLAN

Construction First Costs	$17,819,000
(Bank Protection)	(15,247,000)
(Spill Protection)	(1,427,000)
(Detailed Design)	(1,145,000)
Interest During Construction	1,940,000
Total Investment Cost	$19,759,000
Average Annual Costs	
Amortization	$ 1,569,000
O&M	49,000
(Bank Protection)	(15,000)
(Spill Protection)	(34,000)
Average Annual Costs	$ 1,618,000

OPERATIONS AND MAINTENANCE CONSIDERATIONS

The concrete mats and the grout tubes will require periodic maintenance throughout the 50-year project life. Periodic inspection of all of the project components is necessary to make timely repairs, as required. This would include inspection of the spill booms and other equipment. Drills in compliance with the spill deployment plan will be required after project implementation.

The USCE will assume Operation, Maintenance, Repair, Replacement, and Rehabilitation (OMRR&R) for the erosion control and spill containment features. The responsibilities related to the maintenance of the erosion control components would consist of mat repairs and grout tube replacement/repairs, as necessary. These activities would result from normal deterioration, vandalism, boat or barge damage, and storms. The Refuge staff frequently monitors the entire reach of waterway through the critical habitat and would, therefore, be aware of the needs for maintenance and could notify the USCE of sections needing repair. OMRR&R costs for the erosion control features are estimated to average $15,000 per year.

OMRR&R costs for the spill containment features are estimated at $34,000 annually and will be the responsibility of the USCE. The USCE, however, has no responsibility for deploying the containment booms or any clean-up if an accidental spill occurs. The TGLO and the U.S. Coast Guard have responsibilities for spill response, as well as the USFWS as it relates to protection of the habitat of the Refuge.

PLAN ACCOMPLISHMENTS

The selected plan will allow for continued use of the waterway while protecting the critical habitat of the whooping crane through bank armoring and spill containment measures. Because this project is justified by protecting critical habitat for an endangered species, only those areas lying within the officially designated critical habitat for the endangered whooping crane and identified as needing protection during coordination with the USFWS will be included in the construction plans for the project.

SUMMARY OF EFFECTS

ECONOMIC EFFECTS

The plan will assure continued operation of the GIWW within the ANWR and whooping crane critical habitat. In doing so, major economic effects, such as delays and ultimate closure of this reach of waterway, will be avoided. Additionally, the unquantifiable benefit from protection of the critical habitat of the whooping crane will be realized.

ENVIRONMENTAL EFFECTS

The environmental effects of the selected plan are described in the Environmental Impact Statement.

Effects on Biological Resources

Within the critical habitat, salt marsh vegetation near the GIWW will benefit in the long term from the selected bank protection plan. In addition to preventing the direct loss of 64 acres of marsh habitat, the plan will prevent the indirect loss of 1,075 acres of prime feeding areas in open water (shallow waters of marsh ponds and small lakes and bays) for the whooping crane. Most of the indirect loss will occur in Sundown Bay where at least eight

whooping crane territories are located. The bay will gradually become inaccessible for the cranes to feed in as it is slowly deepened by wave erosion and scouring. These losses and gains are shown in Table 36, including gains from the beneficial use of dredged material in the 50-year disposal plan. Grout tubes will be used to protect the open stretch across Sundown Bay. Oysters are expected to colonize the surface of the tubes and form a series of reefs to further protect the soft bottom of Sundown Bay. Seagrass coverage and density also should increase as a result of the wave protection afforded by the tubes.

TABLE 36

DIRECT AND INDIRECT LOSSES AND GAINS (ACRES) OF THE RECOMMENDED PLAN

RECOMMENDED PLAN	HABITAT	
	Salt Marsh	Open Water
Losses Prevented		
Direct	64	-
Indirect	-	1,075
Gains		
Beneficial Uses	1,614	-

The spill protection plan should further minimize the spread of any hazardous or toxic material into the surrounding marsh and estuarine ecosystem. The placement of pilings and the storage of booms at the Refuge will facilitate a faster response to a spill event.

Effects on Threatened and Endangered Species

Except for some temporary impacts during construction, the selected plan is not expected to adversely impact any of the threatened or endangered species or candidate species on Federal or State lists. All construction will take place during the six month period (mid-April to mid-October) when whooping cranes have left the Aransas area for their summer breeding grounds; therefore, the plan will not adversely impact this species. In fact, the plan is designed specifically to benefit the whooping crane. The plan will prevent the direct loss of 64 acres and the indirect loss of 1,075 acres of critical habitat for the whooping crane (Table 36).

Effects on Historic Resources

No impacts to historic resources are anticipated from the bank protection measures. National Register eligible properties identified that will be impacted by the proposed project will either be avoided by project redesign or mitigated prior to construction. All work will be fully coordinated with the Texas State Historic Preservation Officer and Advisory Council on Historic Preservation as appropriate.

Hazardous and Toxic Waste Considerations

The bank protection plan will not affect any of the existing oil and gas wells. Of the 12 pipeline crossings identified in the area, only six cross the GIWW. Of these six, only one is an oil pipeline and the others transport pressurized gas. The bank protection measures will not impact these pipelines. Based on these findings, the probability of encountering hazardous, toxic, or radioactive wastes or increased project costs and lost time from discovery, coordination, and remediation of HTRW during construction of the project is considered low.

Social Effects

The whooping crane is a specialized and unique resource that is valuable to the region from an economic as well as an environmental standpoint. The growth in tourism in the region is dependent on the continued appeal of the area as a recreational destination and the preservation of the whooping crane. Additional visitor spending at the ANWR is expected to generate additional income and employment to the surrounding counties. This increase is dependent upon the ability to protect the habitat of this unique recreational opportunity. The selected plan provides for this protection.

RISK AND UNCERTAINTY

Principles and Guidelines require that areas of risk and uncertainty in the various planning analyses be identified. There are inherent assumptions and underlying uncertainties in essentially all projections and cost estimates. The various uncertainties involved with this study have been such that they have had no affect on the most important decisions associated with the study. In other words, for the key decision points, such as plan selection, there were such significant differences between the alternatives that the choice of a contingency factor or a projection factor did not influence the decision.

There are two readily identifiable areas of uncertainty in this study. These are the remaining length of shoreline protection which would be constructed under the construction program and uncertainty concerning the system analysis where future construction and maintenance activities would be terminated or postponed. The worst-case scenario was assumed for the amount of shore protection which would remain to be constructed after project authorization.

The uncertainty involved in the system analysis occurs with the Channel to Victoria. In the future without-project condition where the GIWW would not be maintained, the Channel to Victoria project would not be maintained as has been accounted for. However, if cessation of maintenance of the GIWW would occur by mid-1995, the planned modification of the Channel to Victoria, currently estimated to be $32.6 million, would also be terminated. The project, which calls for modification of the existing 9-foot by 100-foot channel to the same dimensions of the GIWW, 12-foot by 125-foot, would be halted and these funds would not be invested. This amount would be added to the total cost savings for not maintaining the reach of the waterway between the Matagorda Ship Channel and the Corpus Christi Ship Channel.

The value established by the system analysis is only for the purpose of determining economic justification of this increment of the overall GIWW system. The total amount of the Channel to Victoria project would not alter the overwhelming economic justification of this reach of the waterway. However, economic justification was not the primary consideration used to select the recommended plan for the Aransas project.

In summary, the relatively few uncertainties involved in the analysis of this project do not have a bearing on the final recommendations.

PLAN IMPLEMENTATION

DIVISION OF PLAN RESPONSIBILITIES

The recommended plan (selected plan) would be accomplished fully at Federal expense. The plan consists of features that would be implemented under the Construction General appropriation category for Congressionally authorized projects. The installation of the remaining bank erosion control measures and the spill containment components would be provided by Congressionally budgeted funds through the Construction General program after the project has been authorized by the Congress. These items were discussed previously and summarized in Table 35.

The funding and implementation schedule for the project is as follows:

FY 1996	Continue Engineering and Design (E&D)	$ 589,000
FY 1997	Complete E&D; Prepare Plans & Specifications (P&S) for Mats-Refuge	837,000
FY 1998	Construct Mats-Refuge; Prepare P&S for Mats-Welder	9.027,000
FY 1999	Construct Mats-Welder; Prepare P&S for Grout Tubes; Prepare P&S for Spill Containment Features	4,432,000
FY 2000	Construct Grout Tube Breakwaters; Construct Spill Containment Features	5,535,000
	TOTAL	$20,420,000

The maintenance of the project features, the construction of areas to place maintenance material, and the actual pumping of the material to these sites would be funded through annual appropriations of the Operations and Maintenance program. The actual amounts would vary on a year-to-year basis because of variability in the volume of material removed during each dredging cycle, the variability of the cycles, and variability in the replacement and repairs associated with the shore protection and spill containment features.

COST SHARING REQUIREMENTS

All initial construction costs for this project will be borne by the Federal Government. This includes all planning, design, engineering, lands, easements, rights-of-way, relocations, contract administration, and construction inspection and supervision. All future maintenance will be a Federal responsibility.

NON-FEDERAL SPONSOR VIEWS

The local sponsor for the existing project, the Texas Department of Transportation, has actively participated throughout the planning process. Their concern, as well as the Federal Govemment's, has been about the potential interruption of navigational traffic on the waterway and the economic impacts to the region and to the State. The Texas Department of Transportation has not shown a preference as to which alternative should be implemented and has indicated their support for whatever plan the Corps of Engineers recommends.

SUMMARY OF COORDINATION, PUBLIC VIEWS, AND COMMENTS

Public input has been important in the overall planning process to assure that plans considered and developed were compatible with community and regional objectives. The primary purposes of public involvement are: (1) to allow the public the opportunity to provide timely information to the Corps of Engineers so that developed plans will reflect their preferences to the greatest extent possible, and (2) to provide a method by which the Corps of Engineers can inform the public so that those who choose to participate in the project formulation and planning process can do so with a relatively complete understanding about the issues, opportunities, and consequences associated with a study.

The various measures used during this study to assure open, two-way public communication included public notices, news releases, media interviews, and meetings with various interested parties. The major coordination events are summarized below.

The feasibility phase was initiated with issuance of a Public Notice on August 30, 1990, which presented a summary of the past and planned study activities for this study. This notice also discussed the study process, the specific problems in the Aransas area, and various alternatives to be investigated and invited all interested parties to provide input to the study. A Notice of Intent to prepare a Draft EIS was included in the Federal Register on October 28, 1992. This document summarized the alternatives being evaluated and described the scoping process and coordination efforts. A second Public Notice on June 24, 1993, requested public input to the scoping process for preparation of an EIS. This notice invited all interested persons to a public scoping meeting which was held on July 21, 1993 in Rockport, Texas.

Studies were coordinated with the USFWS and other Federal and State resource agencies. Three agency scoping meetings were held on November 18, 1992, May 13, 1993 and August 9, 1994. Preliminary studies and meetings with USFWS personnel, including representatives from the Aransas National Wildlife Refuge, provided guidance in developing plans that would minimize destruction of sensitive vegetation and wildlife habitat in the project area. The USFWS prepared a Final Fish and Wildlife Coordination Act report which is included in Appendix B. The Coordination Act report evaluated the potential impacts associated with the alternative plans. The comments from other resource agencies concerning the project were incorporated into the report.

RECOMMENDATIONS

After careful consideration of the economic, environmental, social, and technical aspects for assuring the most efficient flow of commerce that is currently moving through the study area, I recommend that the portion of the existing Gulf Intracoastal Waterway in the Aransas National Wildlife Refuge area between mile markers 485 and 516 be modified in accordance with the specific provisions described for the "Selected Plan" within this report, with such modifications thereof, as in the discretion of the Commander, HQUSACE, may be advisable.

The recommended plan consists of bank erosion protection using concrete mats and grout tubes for areas within the critical habitat and provisions for a spill containment system. The total construction cost is estimated to be $17,819,000 and a total investment cost of $19,759,000 using October 1994 price levels. The average annual costs for this plan are estimated to be $1,617,000 which includes interest and amortization and operation and maintenance costs. The interest rate is 7.75 percent. Annual operation and maintenance cost for this plan is estimated to be $49,000 with $15,000 required for periodic mat and grout tube repair/replacement and $34,000 required annually for the spill containment plan feature. The estimated fully-funded total project cost is $20,420,000. This plan does not require mitigation for unavoidable impacts to fish and wildlife resources. The recommended plan is the NED plan.

The long-term dredged material disposal plan (50 years) would use the dredged maintenance material beneficially and would constitute the least costly means of disposal of maintenance material consistent with sound engineering practice and meets the environmental standards established by Section 404 of the Clean Water Act of 1972. This plan would become the base plan to be implemented through the Federal Operations and Maintenance Program and is not part of the plan being authorized by the Congress. The accompanying Environmental Impact Statement documents the environmental considerations and factors involved in the development of the selected plan for this study.

The recommendations contained herein reflect the information available at this time and current Departmental policies governing formulation of individual projects. They do not reflect program and budgeting priorities inherent in the formulation of a national Civil Works construction program nor the perspective of higher review levels within the Executive Branch. Consequently, the recommendations may be modified before they are transmitted

to the Congress as proposals for authorization and implementation funding. However, prior to transmittal to the Congress, the sponsor, the State, interested Federal agencies, and other parties will be advised of any modifications and will be afforded an opportunity to comment further.

16 Oct 95
DATE

Robert B. Gatlin
Colonel, Corps of Engineers
District Engineer

GULF INTRACOASTAL WATERWAY

ARANSAS NATIONAL WILDLIFE REFUGE, TEXAS

FINAL

ENVIRONMENTAL IMPACT STATEMENT

U. S. ARMY CORPS OF ENGINEERS
GALVESTON DISTRICT
NOVEMBER 1995

GULF INTRACOASTAL WATERWAY
ARANSAS NATIONAL WILDLIFE REFUGE

FINAL ENVIRONMENTAL IMPACT STATEMENT

The responsible agency is the U.S. Army Engineer District, Galveston.

Abstract: The Galveston District has investigated the erosion problem in the Aransas National Wildlife Refuge, Texas, area to determine the feasibility of preventing erosion of whooping crane critical habitat along the Gulf Intracoastal Waterway (GIWW). The plan of improvements are described in the accompanying Feasibility Report and Environmental Impact Statement (EIS). The shoreline of this portion of the GIWW is being eroded at the rate of about 2.5-4 acres per year, seriously degrading valuable wetlands used by the endangered whooping crane. Four alternatives were evaluated for protecting critical habitat designated under the Endangered Species Act (ESA) while maintaining operation of the GIWW. These plans included three realignments of the GIWW to avoid the sensitive wetlands in the critical habitat and one using the present alignment with a bank protection, spill containment, and 50-year disposal plans that includes beneficial uses of dredged material to create about 1,614 acres of new marsh. A two-step process was used to evaluate and screen these plans.

Based on the environmental impacts, engineering feasibility, and economic considerations, the selected plan consists of bank protection along the present alignment and a spill containment plan. This plan will protect whooping crane critical habitat and enable the U. S. Army Corps of Engineers (USCE) to avoid jeopardy status under the ESA. In addition, a 50-year disposal plan will create new wetlands to partially replace past losses in the area. The USCE will organize an Interagency Coordination Team in cooperation with the State and Federal resource agencies to oversee the design, construction, and monitoring of marshes in the beneficial use sites.

THE OFFICIAL CLOSING DATE FOR THE RECEIPT OF COMMENTS IS 30 DAYS FROM THE DATE ON WHICH THE NOTICE OF AVAILABILITY OF THIS FINAL EIS APPEARS IN THE FEDERAL REGISTER.

If you would like further information on this statement, please contact:
Mr. Richard Medina
U.S. Army Engineer District, Galveston
P.O. Box 1229
Galveston, Texas 77553-1229
(409) 766-3044

Note: Certain information, displays, maps, etc. discussed in the Main Report and Appendices are incorporated by reference in the EIS.

SUMMARY

MAJOR CONCLUSIONS AND FINDINGS

The major factors affecting formulation of alternatives for this project include the location of the Gulf Intracoastal Waterway (GIWW) inside critical habitat designated under the Endangered Species Act (ESA) to protect the winter feeding grounds for the endangered whooping crane. The sensitive wetlands along the banks of the GIWW where it crosses Welder Flats and Blackjack Peninsula are eroding at the rate of 2.5-4 acres per year. The Corps of Engineers (USCE) has agreed to protect the wetlands from project-related erosion under a Biological Opinion written by the U.S. Fish and Wildlife Service (USFWS) in response to formal Section 7 consultation under the guidelines of the ESA. If the wetlands are not protected from project-related erosion, the USCE will be in potential violation of Sections 7 and 9 of the ESA and subject to lawsuit by one or more environmental groups. It is estimated this section of the GIWW will lose its commercial navigability by about 2003 under present shoaling conditions if the USCE abandoned it and the conditions that constitute potential violations of the ESA remain uncorrected.

The USCE coordinated development of four alternative plans with State and Federal resource agencies, and considered their input carefully during evaluations and screenings of the plans for environmental impacts and overall suitability for the environmental needs of the project. The selected plan avoids putting the USCE into jeopardy status under the ESA.

SELECTED PLAN

The selected plan was developed after taking into consideration the resource agencies concerns and suggestions, social and environmental impacts, engineering feasibility, and economic costs. The recommended plan, which is also the National Economic Development plan, consists of bank protection and a spill containment feature. Bank protection consists of an articulated concrete mattress that will be placed along 84,000 feet of bank, extending from the natural marsh height of about 2.0 - 3.5 feet above Mean Low Tide (MLT) to about 0.0 - 2.0 feet below MLT. Grout tube sections about 1,000-feet long with 100-foot openings will extend across Sundown Bay to protect shallow bay bottom from wave scouring. Spill containment consists of piles on each side of natural passes to bays and marsh sloughs for attachment of oil-spill booms. Piles will be placed

at 300-foot intervals across larger areas of open water, such as Dunham Bay and Welder Flats.

OTHER MAJOR CONCLUSIONS AND FINDINGS

This Environmental Impact Statement (EIS) has been prepared to satisfy the requirements of all applicable laws and regulations using the Council on Environmental Quality's National Environmental Policy Act regulations (40 CFR Part 1500) and the Corps of Engineers regulation ER 200-2-2 (33 CFR 230). The following is a brief summary of the effects of the recommended plan upon the significant resources of the Aransas National Wildlife Refuge and the Critical Habitat of the Whooping Crane.

Whooping Cranes and Critical Habitat. The recommended plan and the 50-year disposal plan are expected to significantly benefit the whooping crane through protection of critical habitat and gradual creation of new feeding grounds. All construction will take place during the approximately six months when whooping cranes are at their summer breeding grounds, therefore the project will not adversely impact this species. In fact, the project is designed specifically to benefit the whooping crane.

Other Endangered Species. Except for some temporary impacts during construction, the recommended plan is not expected to adversely impact any of the other listed threatened or endangered species or the candidate species. It is expected that at least 42 more threatened and endangered species, candidate species for Federal listing, or State-listed species will benefit or not be affected by the project.

Historic Resources. No impacts to historic resources are expected from construction of the recommended plan.

Water and Sediment Quality. No meaningful temporary or long-term impacts to water and sediment quality are expected as a result of the recommended plan.

OMRR&R and Spill Response. The USCE will be responsible for operation, maintenance, repair, replacement, and rehabilitation (OMRR&R) of the erosion control and the spill containment features. Maintenance of these components would consist of mat repairs, grout tube replacement and repairs, and attachment pile and boom repairs and replacement, as necessary. The USCE, however, has no responsibility for deploying the containment booms or any clean-up if an accidental spill occurs. The Texas General Land Office and the U.S. Coast Guard have responsibilities for spill response, as well as the

USFWS as it relates to protection of the habitat of the Refuge. These agencies have concurred with these determinations.

50-year Disposal Plan. Although not part of the recommended plan, a 50-year disposal plan was developed for the disposal of dredged material from maintenance dredging of the GIWW. A long-term disposal plan is considered an integral part of the overall solution to the loss of whooping crane critical habitat and will be carried out under Operations and Maintenance authority. The 50-year disposal plan consists of using dredged material beneficially to create about 1,614 acres of new marsh at 11 sites. The beneficial use sites will be used starting in the first dredging cycle and the five existing and one new leveed upland disposal site will be used to contain the material during the next dredging cycle. The sites will continue to be used on an alternating basis throughout the 50-year disposal period.

Because the resource agencies have expressed a need for more details on the beneficial use sites, the USCE will form an Interagency Coordination Team (ICT) during the Preconstruction Engineering and Design phase to assist in designing, constructing, planting, and monitoring the sites. The ICT will also assist in designing the monitoring plan and make recommendations for modifying the sites to ensure the success and usefulness of the marshes for wildlife and aquatic resources.

AREAS OF CONTROVERSY AND UNRESOLVED ISSUES

There are no areas of controversy or unresolved issues related to the recommended bank protection and spill containment plan. The USFWS has issued a Final Coordination Act Report for this project. The report includes comments from other resource agencies on the recommended plan, and their need for more detailed design information for the beneficial use sites discussed in the 50-year disposal plan. The USFWS and National Marine Fisheries Service have concurred that the recommended bank protection and spill containment plan are in full compliance with the Endangered Species Act.

RELATIONSHIP TO ENVIRONMENTAL REQUIREMENTS

The recommended plan is in full compliance with the environmental requirements applicable to this stage of the planning process. A discussion of the applicable laws can be found in Section 5.0.

GULF INTRACOASTAL WATERWAY
ARANSAS NATIONAL WILDLIFE REFUGE
(SECTION 216)

FINAL ENVIRONMENTAL IMPACT STATEMENT

TABLE OF CONTENTS

Section	Description	Page
ABSTRACT		i
SUMMARY		ii
LIST OF FIGURES		viii
LIST OF TABLES		ix
1.0	**NEED FOR AND OBJECTIVES OF ACTION**	1-1
1.1	Study Authority and Location	1-1
1.2	Existing Project	1-2
1.2.1	History of the Gulf Intracoastal Waterway	1-2
1.2.2	The GIWW and the Endangered Species Act	1-5
1.3	History of Aransas Refuge and Whooping Crane	1-7
1.3.1	The Aransas National Wildlife Refuge	1-7
1.3.2	The Whooping Crane	1-9
1.4	Problems and Needs	1-18
1.4.1	Erosion Problems	1-18
1.4.2	Spill Prevention Problems	1-19
1.4.3	Dredged Material Disposal Problems	1-20
1.5	Public Concerns	1-20
1.6	Planning Objectives	1-21
1.7	Resource Management Opportunities	1-22
1.7.1	General	1-22
1.7.2	Beneficial Uses of Dredged Material	1-23
2.0	**ALTERNATIVES**	2-1
2.1	Introduction	2-1
2.2	General Screening	2-1
2.3	Initial Screening of Alternatives	2-2
2.3.1	No Action (Future Without Project)	2-3

2.3.2 Alternative 1 - Northern Alignment 2-7
2.3.3 Alternative 2 - Existing Alignment 2-8
2.3.4 Alternative 3 - Open-Bay Alignment 2-13
2.3.5 Alternative 4 - Barrier Island Alignment 2-14
2.4 Comparison of Plans 2-15
2.5 Final Screening of Alternatives 2-15
2.5.1 No Action (Future Without Project) 2-15
2.5.2 Alternative 2 - Existing Alignment 2-15
2.5.3 Alternative 3 - Open-Bay Alignment 2-17
2.6 Conclusion 2-19

3.0 AFFECTED ENVIRONMENT 3-1
3.1 Environmental Conditions 3-1
3.1.1 Physiography 3-1
3.1.2 Geology 3-1
3.1.3 Hydrology 3-2
3.1.4 Climate 3-2
3.1.5 Ecology 3-3
3.1.6 Air Quality and Noise 3-3
3.2 Significant Resources 3-4
3.2.1 General 3-4
3.2.2 Vegetation 3-5
3.2.3 Wildlife Resources 3-7
3.2.4 Aquatic Resources 3-7
3.2.5 Threatened and Endangered Species 3-9
3.2.6 Water and Sediment Quality 3-37
3.2.7 Hazardous, Toxic, and Radioactive Wastes 3-38
3.2.8 Historic Resources 3-38
3.2.9 Socioeconomic Resources 3-39

4.0 ENVIRONMENTAL CONSEQUENCES 4-1
4.1 No Action (Future Without) 4-1
4.1.1 General 4-1
4.1.2 Vegetation 4-1
4.1.3 Wildlife Resources 4-1
4.1.4 Aquatic Resources 4-1
4.1.5 Threatened and Endangered Species 4-2
4.1.6 Water and Sediment Quality 4-2
4.1.7 Hazardous, Toxic, and Radioactive Wastes 4-2
4.1.8 Historic Resources 4-3
4.1.9 Socioeconomic Resources 4-3

4.2 Alternative 2 - Existing Alignment 4-4
4.2.1 General 4-4
4.2.2 Bank Erosion Protection Plan 4-5
4.2.3 Spill Contingencies and Analysis 4-6
4.2.4 50-Year Disposal Plan 4-9
4.2.5 Vegetation 4-14
4.2.6 Wildlife Resources 4-15
4.2.7 Aquatic Resources 4-15
4.2.8 Threatened and Endangered Species 4-15
4.2.9 Water and Sediment Quality 4-24
4.2.10 Hazardous, Toxic, and Radioactive Wastes 4-24
4.2.11 Historic Resources 4-24
4.2.12 Socioeconomic Resources 4-25
4.2.13 Cumulative Impacts 4-25
4.2.14 Mitigation 4-28
4.2.15 Summary 4-29
4.3 Any Adverse Environmental Effects Which Cannot Be Avoided Should The Recommended Plan Be Implemented. 4-29
4.4 Any Irreversible and Irretrievable Commitments of Resources Involved in Implementation of the Recommended Plan. 4-30
4.5 Relationship Between Local Short-Term Uses of Man's Environment and the Maintenance and Enhancement of Long-Term Productivity. 4-30

5.0 CONSISTENCY WITH OTHER STATE AND FEDERAL PLANS 5-1

6.0 PUBLIC INVOLVEMENT, REVIEW, AND CONSULTATION 6-1
6.1 Public Involvement Program 6-1
6.1.1 Reconnaissance Phase 6-1
6.1.2 Feasibility Phase 6-1
6.2 Public Views and Responses 6-2
6.3 Statement Recipients 6-2
6.4 Review of Draft Environmental Impact Statement 6-3

7.0 LIST OF PREPARERS 7-1

8.0 REFERENCES, ABBREVIATIONS, AND INDEX 8-1
8.1 References 8-1
8.2 List of Abbreviations 8-10
8.3 Index 8-11

LIST OF FIGURES

Figure	Description	Page
1	Map of the Aransas National Wildlife Refuge and critical habitat for the endangered whooping crane	1-3
2	Original channel location	1-4
3	The original range of Grus americana in recent times	1-11
4	Breeding and wintering areas and migration pathway of the Wood Buffalo National Park - Aransas National Wildlife Refuge population	1-12
5	Map of the project area showing the four alternatives reviewed for the feasibility study	2-4
6	Maps of the proposed beneficial use sites, location of the concrete mattress and geotextile tubes used to protect the shoreline, and the upland leveed disposal sites for the 50-year disposal plan	2-10
7	Locations of the 1992-1993 winter territories of whooping cranes	3-16

LIST OF TABLES

Table	Description	Page
1	Direct and indirect habitat losses and gains (acres) from construction of new channel cut, right-of-way, disposal areas (DA), and beneficial use sites for the Aransas alternatives	2-5
2	The length (feet) of shoreline along the GIWW inside the whooping crane critical habitat that has been or will be protected by cellular concrete mattress	2-13
3	Summary of ANWR project alternatives considered during initial and final screening for selected economic, environmental, and socioeconomic components	2-16
4	List of threatened and endangered species	3-11
5	Historic and projected annual visitations to the Aransas National Wildlife Refuge	3-41
6	Projected economic impacts of a 10 percent visitor decline to the Aransas National Wildlife Refuge	4-3
7	Projected economic impacts of a 25 percent visitor decline to the Aransas National Wildlife Refuge	4-3
8	Multiplier effect of spending by visitors to the Aransas National Wildlife Refuge	4-25

1.0 NEED FOR AND OBJECTIVES OF ACTION

1.1 STUDY AUTHORITY AND LOCATION

This feasibility study was conducted under authority of Section 216 of the 1970 Flood Control Act (Public Law 91-611) which provides for review of completed Corps of Engineers' projects for modification because of changes in physical or economic conditions. Section 216 states:

> "The Secretary of the Army, acting through the Chief of Engineers, is authorized to review the operation of projects the construction of which has been completed and which were constructed by the Corps of Engineers in the interest of navigation, flood control, water supply, and related purposes, when found advisable due to significantly changed physical or economic conditions, and to report thereon to Congress with recommendations on the advisability of modifying the structures or their operations, and for improving the quality of the environment in the overall public interest."

The initial phase of study, a Reconnaissance Report dated November 1989, was prepared by the Galveston District, U.S. Army Corps of Engineers (USCE) and consisted of an initial appraisal and reconnaissance level studies. This report included the reaches of the Gulf Intracoastal Waterway (GIWW) adjacent to Sargent Beach and the Aransas National Wildlife Refuge (ANWR). The study provided a preliminary indication that problems have developed due to significant changes in physical conditions at these locations. The problem at the ANWR (the focus of this feasibility study) centers around the erosion of marshes caused by navigation and wind-induced waves and, to some extent, dredged material disposal practices where the GIWW crosses critical habitat for the endangered whooping crane. This critical habitat was designated in 1978 as required by the Endangered Species Act (ESA) of 1973 (16 USC 1531, et seq.) to protect the whooping crane's winter territory and is provided the full protection of the ESA. Details of this problem, how it arose, and how it relates to the project are contained in Sections 1.2, 1.3, and 1.4.

The second phase of study consists of preparing a Feasibility Report and Environmental Impact Statement (EIS) for the project area which evaluates alternatives to eliminate or significantly lessen impacts to the environment, especially the critical habitat. The Feasibility Report and EIS will present detailed engineering, economic, and environmental analyses which evaluate the alternatives leading to a recommendation to Congress that a specific alternative be implemented.

This EIS discusses the reach of GIWW which crosses the designated critical habitat for the whooping crane which is located in portions of Aransas, Refugio, and Calhoun Counties about 35 miles northeast of Corpus Christi (Figure 1). The ANWR study area encompasses a 42-mile reach of the GIWW from channel miles 479 to 521 as measured from the Harvey Locks in Louisiana. This reach includes a 13.25-mile segment that passes through the ANWR.

1.2 EXISTING PROJECT

1.2.1 History of the Gulf Intracoastal Waterway

Before construction of the GIWW between Matagorda Bay and Aransas Pass, commercial transportation along the mid-Texas coast was limited to railways, which connected only a few towns, or to light-draft steamers and barges. Many small settlements along the bays depended on waterborne transport for exchange of commodities and communication with the towns at railway terminals. This waterborne transport used a series of bays which had 5-10-foot depths at Mean Low Tide (MLT) for the most part, but navigation was restricted in many places by sand bars and shell reefs. As early as 1859, a small amount of dredging through these shell reefs was done by the State of Texas or private parties to facilitate navigation. This route was used as the United States mail route between Indianola, located on the western shore Matagorda Bay north of Port O'Connor, and Corpus Christi (as late as 1875) before railway connection was established. By 1905, the original 3-foot depths at MLT had shoaled to less than two feet and waterborne commerce was threatened.

The River and Harbor Act of March 2, 1907 (H. Doc. 640, 59th Cong., 2nd Sess.) authorized the dredging and maintenance of "...a 40 feet wide and 5 feet deep at MLT from the entrance to Turtle Cove, at Aransas Pass to Matagorda Bay, at the head of Pass Cavallo, a distance of about 63 miles, utilizing the lagoons between the islands and the mainland...." Dredging of the 5 x 40-foot channel started in September 1907 and was completed in August 1909 at a cost of $49,017.76. This original channel passed through San Antonio, Mesquite, and Aransas Bays (Figure 2).

After completion of the 5- by 40-foot channel, the town of Port O'Connor was built on the peninsula between Espiritu Santo Bay and Matagorda Bay and supplied with a railroad connection. In 1911, the Corps of Engineers recommended changing the route of the channel to pass through Barroom Bay and by Port O'Connor, abandoning part of the original route. This work was authorized by the River and Harbor Act of July 25, 1912. Dredging was completed in August 1913. The new channel passed through Barroom Bay

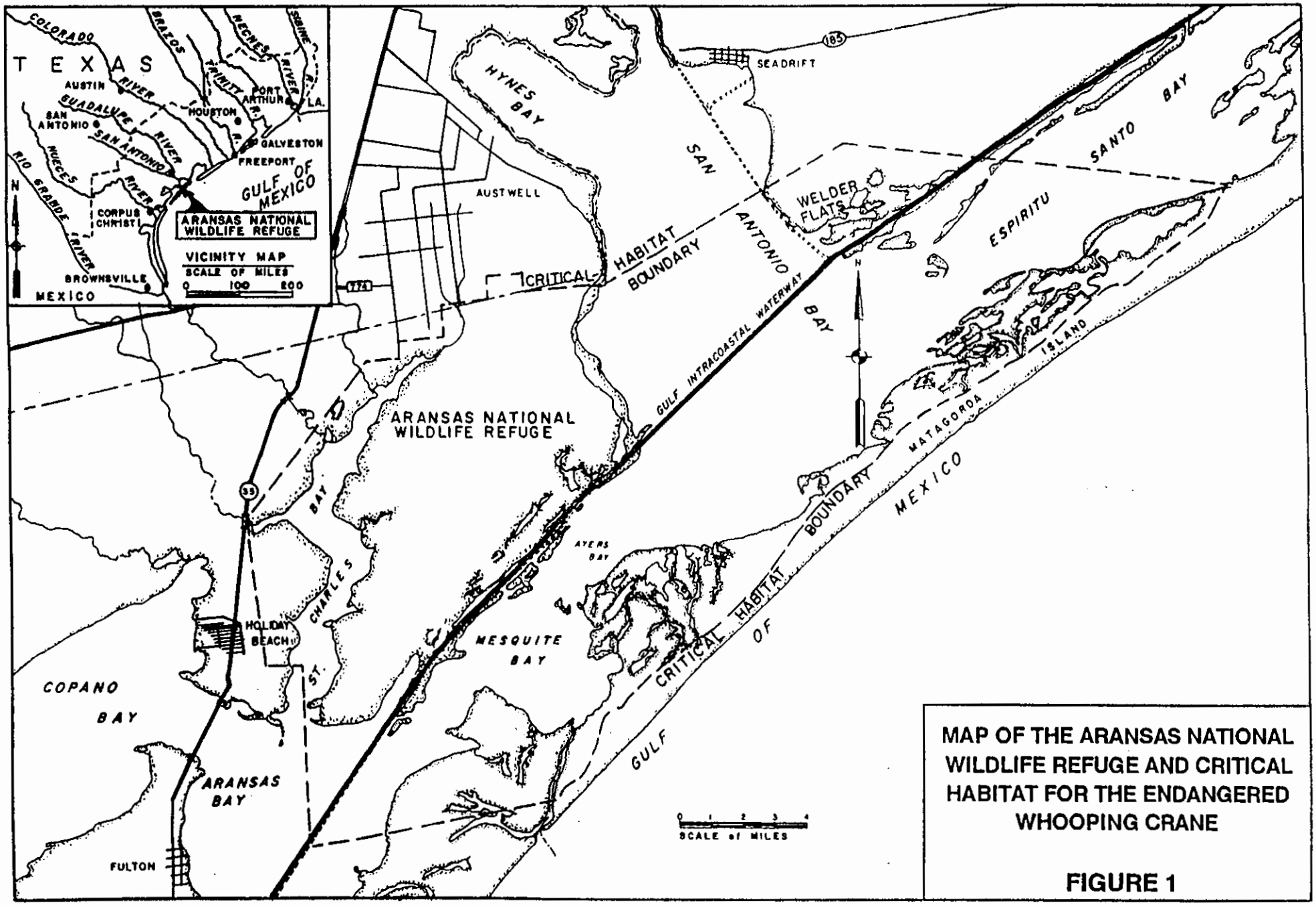

MAP OF THE ARANSAS NATIONAL WILDLIFE REFUGE AND CRITICAL HABITAT FOR THE ENDANGERED WHOOPING CRANE

FIGURE 1

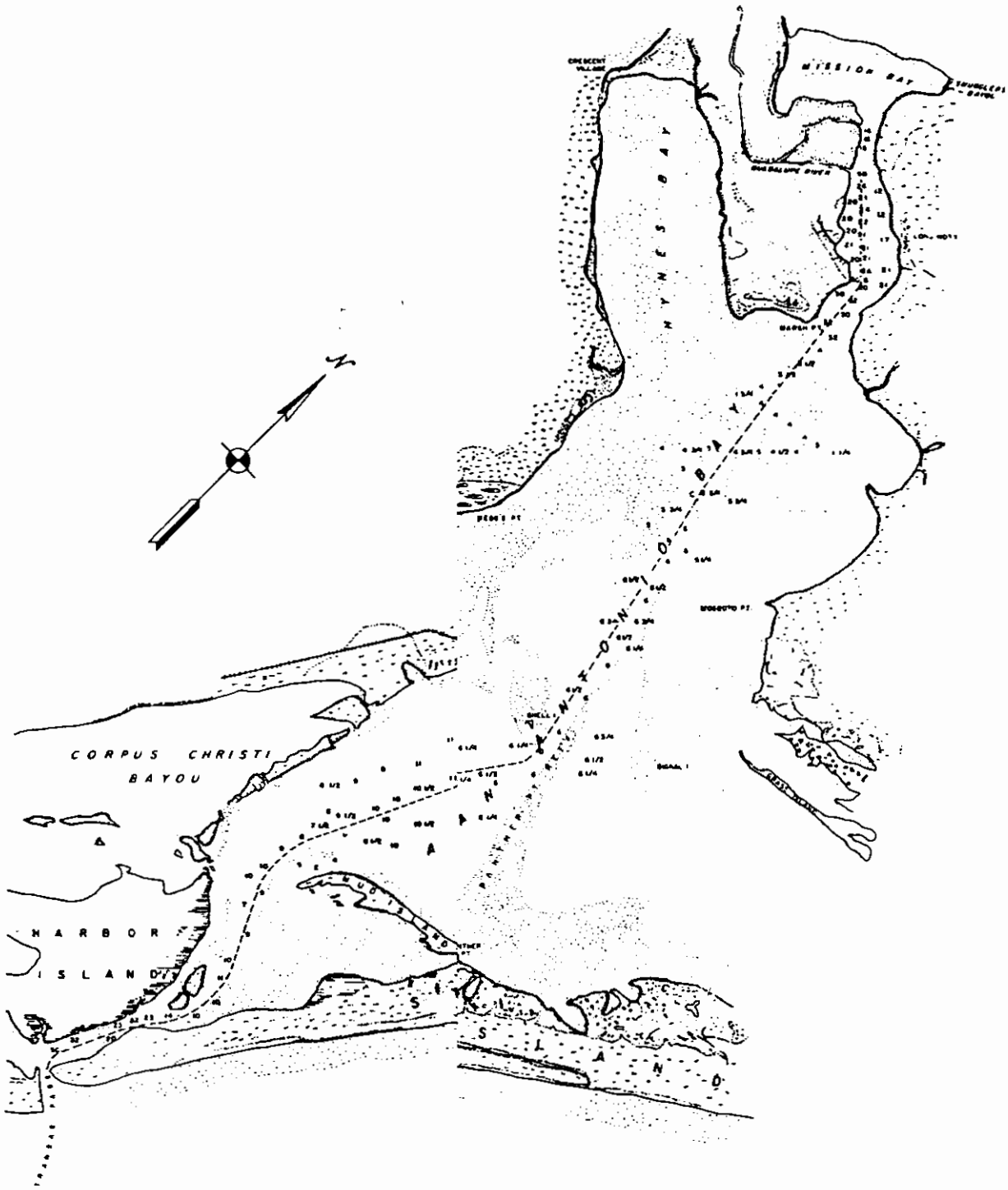

ORIGINAL CHANNEL LOCATION

FIGURE 2

and across a narrow neck of land near Port O'Connor and into Matagorda Bay superseding the old channel through Big Bayou.

After completion of the realigned channel, commercial traffic increased, but shallow depths and narrow widths of the channel prevented its use as expected. Economical commercial use of barges required a minimum of 4.5-5-foot loaded draft and the channel was constantly shoaling. Also, uninterrupted use of the channel during all seasons was not possible because northers during the winter could depress the water level as much as two feet below MLT. As a result, Congress authorized modification of the channel dimensions to 9 x 100 feet on January 21, 1927 (H. Doc. 238, 68th Cong., 1st Sess.).

Dredging on the 9 x 100-foot channel between Matagorda Bay and Aransas Pass started in September 1938 and was completed in July 1940 at a cost of $533,581.63. The new channel followed the same route, except for one section, where it passed through the marsh along the north shore of Shoalwater, San Antonio, and Mesquite Bays. This inland route was chosen for economic reasons. Although it was more expensive to dredge across land rather than open water, the increased cost was more than offset by the increased savings in future maintenance dredging. Open water stretches of channel shoaled much faster than land cuts and, therefore, required more maintenance dredging. This route was protested by the manager of the Aransas National Wildlife Refuge who was concerned about adverse environmental impacts to the whooping crane.

Even before this channel was completed, commercial interests were requesting an enlarged channel because of increased traffic and larger and more barges in each tow. Also, the population and industrial plants were increasing along the coast due to the expansion in petroleum and related industries (discovery of new oil fields and construction of pipelines and refineries during the 1930's). As a result, commerce was increasing beyond expectations. Therefore, the USCE recommended expanding the channel to its current dimensions of 12 x 125 feet in March 1939. Authorization for the enlarged channel from the Sabine River to Corpus Christi was granted on July 23, 1942 (Public Law 675, 77th Cong.) and the section of the GIWW from San Antonio Bay to Port Aransas was dredged in 1944 at a cost of $618,252.59. This channel followed the same route as the 9 x 100-foot channel.

1.2.2 The GIWW and the Endangered Species Act

Since construction of the 12 x 125-foot channel in 1944, the route of the GIWW between Matagorda Bay and Aransas Bay has remained unchanged and maintenance dredging has occurred at regular intervals to maintain authorized dimensions. Up to 1974,

maintenance material dredged from the inland portion of the waterway was pumped into designated unconfined disposal areas on the southeast (bay) side of the channel. However, in 1974, the USCE began leveeing emergent disposal sites to confine dredged material in an agreement with the USFWS to help reduce environmental impacts. Confining the material helps prevent further losses of ecologically valuable shallow aquatic and marsh habitat caused by disposal operations.

This habitat loss is especially critical to the survival of the endangered whooping crane (see Section 1.3.2). Furthermore, after designation as critical habitat under the ESA in 1978, the crane's marsh habitat in the project area is now accorded the same protection enjoyed by all Federally-listed endangered species. In particular, Federal agencies must ensure that their projects avoid, to the greatest extent possible, all adverse impacts to Federally-listed species and their critical habitat. Unfortunately, the crane's marsh habitat is still disappearing due to a variety of natural and channel-related causes. According to one recent study (Sherrod and Medina, 1992), net losses of habitat inside the designated critical habitat from 1930 to 1986 (derived from aerial photographs in those years) along the GIWW and the Channel to Victoria have amounted to about 2,078 acres. This acreage includes direct losses from channel construction and maintenance, indirect losses from wind and vessel waves, sea-level rise and land subsidence, and any gains in crane habitat in the area. Recent annual losses have been calculated at about 2.5-4 acres per year, mostly on the mainland side of the channel (USCE, 1989 and Stehn, 1987).

Since 1986, additional crane habitat has been lost, mostly due to navigation and wind-induced wave erosion along the banks of the GIWW. Because portions of the critical habitat were being adversely impacted (lost) by use of a Federal project (the GIWW), the USCE entered into Section 7 consultation as required by the ESA in March 1989. By May 1993, an agreement was coordinated with the USFWS to protect the critical habitat along the GIWW from erosion by armoring the banks on the northwest (mainland) side of the channel with articulated concrete mattress. The mats would be laid during the six months when the cranes were absent from the Refuge. Construction on varying lengths of channel bank was started in 1992 and is dependent on available funds in the Operations and Maintenance (O&M) budget. Approximately 18,000 feet of shoreline (of the 84,000 feet needed to complete the task) have been protected by fall 1995, with an additional 2,000 feet scheduled each year until the Section 216 study is completed and the project is authorized for construction (anticipated in FY 1996). Construction of the rest of the armoring work is expected to start in FY 1998. Details on the armoring work can be found in Sections 2.3.3 and 4.2.4.

In addition to the armoring work agreed to in Section 7 consultation with the USFWS, the Section 216 study investigated a 50-year disposal plan that would use dredged maintenance material to create approximately 1,600 acres of new marsh to replace most of the 2,000 acres of crane habitat that have been lost as a direct or indirect result of construction and maintenance of the GIWW since 1939.

1.3 HISTORY OF THE ARANSAS REFUGE AND WHOOPING CRANE

1.3.1 The Aransas National Wildlife Refuge

The area which is now occupied by the ANWR was occupied at the time of the arrival of the final European settlers by the Karankawa (water-walker) Indians. These indians gathered roots and nuts and hunted and fished. The first written description of the Blackjack Peninsula comes from the personal diary of Jean Louis Berlandier in March 1829. His ship ran aground and was stranded for six days in Copano Bay. Berlandier noted the presence of foxes (probably coyotes), wolves, wild horses, a large species of cat, pelicans, and egrets. He described the land area as a vast expanse of grassland with occasional mottes of trees. The first recorded white settlement in the area was in 1843 when George A. Brundrett moved into the southeastern part of Blackjack Peninsula along Mesquite Bay (now part of the ANWR). Several small farms and ranches were established on Blackjack Peninsula during the 1890's and early 1900's. Two post offices existed within the boundaries of the present ANWR during the years 1890 through 1911.

Most of the ranches on Blackjack Peninsula were consolidated under Cyrus B. Lucas, a cattleman, around 1918. From 1923 until 1937, control of all of the ranches on Blackjack Peninsula was held by Leroy G. Denman of the San Antonio Loan and Trust Company. Denman introduced, or reintroduced, various species of animals, including some exotics. Most of these did poorly, but white-tailed deer and turkeys, which had once been numerous in the area, and some European wild boars, which interbred with the descendants of hogs which were raised on local ranches in the late 1800's, did well and are common today.

In 1937, Denman sold, for the San Antonio Loan and Trust Company, the entire Blackjack Peninsula to the U.S. Government which established the Aransas Migratory Waterfowl Refuge. The legal authority for the acquisition of the land was the Migratory Bird Conservation Act. In recent years, the Refuge has been expanded to include most portions of Matagorda Island. In 1939, the name was changed to the Aransas National Wildlife Refuge. Including the original purchase from Denman and numerous small purchases, by 1967, the ANWR contained 47,261 acres. In 1967, the surface rights to an

additional 7,568 acres of land on Lamar Peninsula located on the west side of St. Charles Bay was donated to the Refuge, bringing the total to 54,829 acres. Since then, additional parcels of land extending as far as Port Lavaca have been added, bringing the total to about 114,000 acres.

The purpose of the National Wildlife Refuge System, including the ANWR, is to manage migratory birds and their habitats, to ensure optimum diversity, distribution, abundance, and use by people. Executive Order 7784 states that the ANWR will be used "...as a refuge and breeding ground for migratory birds and other wildlife...." Although not specifically stated in the Executive Order, it was the intent of the Government that the only remaining wintering ground of the whooping cranes be preserved. Conservation efforts have been successful in that a slow increase in the number of birds has occurred, from a wintering population of 18 birds in 1938-39 to 133 birds in spring 1995. The highest number of birds in the Aransas flock was 146 birds in 1989-90 and 1990-91.

The ANWR also hosts the following plants and animals (in addition to the Federally-listed threatened and endangered species) which are of special concern to the Texas Natural Heritage Program: the coati (a mammal), least tern, Texas horned lizard, Texas scarlet snake, reddish egret, white-faced ibis, wood stork, sooty tern, American swallow-tailed kite, white-tailed hawk, zone-tailed hawk, Texas diamondback terrapin, Gulf saltmarsh snake, and threeflower broomweed.

The critical habitat boundary for the whooping crane at the ANWR was published in the Federal Register on Monday, May 15, 1978 and became effective June 14, 1978. The critical habitat boundary around the ANWR is described as follows:

> "Texas. An area of land, water, and air space in Aransas, Calhoun, and Refugio Counties with the following boundaries: Beginning at the point where the north boundary of the Aransas National Wildlife Refuge intersects the shore of San Antonio Bay at Webb Point; thence, from this point along a straight line across San Antonio Bay through the westernmost tip of Mosquito Point and inland to a point of intersection with metal surfaced road; thence eastward along a straight line across Espiritu Santo Bay to the intersection of the bay shore and a road at the east end of Pringle Lake on Matagorda Island; thence south along this road to the intersection with the main Matagorda Island road; southwestward along this main road to Cedar Bayou at latitude 28°04'10" N.; thence due west across Cedar Bayou, Vinson Slough, and Isla San Jose to Gulf Intracoastal Waterway platform channel marker No. 25; thence north to the southwest corner of the proclamation boundary, just south of Blackjack Point; thence north along the proclamation boundary into St. Charles Bay to a line drawn as an eastward extension of Twelfth Street on Lamar Peninsula; thence westward along this line to intersection with Palmetto Avenue; thence northward along a straight line to the southwest corner of the Aransas National Wildlife Refuge at Texas State Highway 35 and the north

shore of Cavasso Creek; thence northeast on a straight line to the corner of the Aransas National Wildlife Refuge north boundary adjacent to triangulation station "Twin"; thence along the north boundary of said refuge to the starting point at Webb Point."

The definition of the term "critical habitat" as published in the May 15, 1978 Federal Register is reprinted below:

"Critical Habitat" means any air, land, or water area (exclusive of those existing man-made structures or settlements which are not necessary to the survival and recovery of a listed species) and constituent elements thereof, the loss of which would appreciably decrease the likelihood of the survival and recovery of a listed species or a distinct segment of its population. The constituent elements of critical habitat include, but are not limited to: Physical structures and topography, biota, climate, human activity, and the quality and chemical content of land, water, and air. Critical habitat may represent any portion of the present habitat of a listed species and may include additional areas for reasonable population expansion.

1.3.2 The Whooping Crane

The following history of the whooping crane and management attempts to restore the population are taken from the 1986 Recovery Plan (USFWS, 1986a) and augmented with information from the 1994 Revised Recovery Plan (USFWS, 1994).

1.3.2.1 Distribution

Although it is now an endangered species, the whooping crane was more abundant in the past and can be identified in the North American fossil record for at least several million years. The historic range extended from the Arctic coast of Canada south to central Mexico and from Utah east to New Jersey, South Carolina, and possibly Georgia and Florida. Its breeding range extended from central Illinois northwestward through northern Iowa, western Minnesota, northern North Dakota, southern Manitoba, Saskatchewan, and Alberta, Canada (Figure 3). A separate nonmigratory breeding population existed in southwestern Louisiana until recent times. The whooping crane disappeared from the heart of its breeding range in the north-central United States by the 1890's.

By 1870, it was estimated that only 500-700 whooping cranes remained and were rapidly declining. Only two small breeding populations remained by 1937; a sedentary population around White Lake in southwestern Louisiana and a migratory population which wintered on the ANWR near Corpus Christi, Texas and nested in Wood Buffalo National Park, Canada (WBNP). The remnant Louisiana population was reduced from 13 to 6 birds following a severe storm in August 1940, and the last surviving bird was taken into captivity

on March 11, 1950. The remaining wild population reached its low point in 1941 when only 15 birds were counted at the newly created ANWR. Through careful management and with a great deal of luck, these slowly reproducing, but long-lived, birds have struggled to increase their numbers, until now (August 1995) there are 133 adult and 25 juvenile birds in the Aransas-Wood Buffalo flock. In addition, there are 4 birds in an experimental wild flock at Grays Lake, Idaho, 24 birds in a new experimental wild flock in Central Florida, and 146 birds in five captive flocks, bringing the total number of whooping cranes in the world to 332 birds.

Before their precipitous decline starting in the 19th Century, whooping cranes used several migration routes between the summer nesting areas and the winter grounds (Figure 3). However, only one migration route has been used for the last 50 years (Figure 4). The birds are diurnal migrants and make regular stops to feed and rest at night. They generally prefer isolated sites away from human activities. Several refuges have been established along the migration route to help protect these birds, but they still face many hazards outside the refuges, such as hunters, power lines, wire fences, predators, and disease, that take a heavy toll along the way in some years.

Sports hunting, coupled with the whooping crane's low reproductive capabilities, led to their initial decline which was greatly hastened at the turn of the century by an increase in agriculture in the northern Great Plains of the U.S. and the prairie provinces of Canada, their primary breeding grounds. Only the remnant population which happened to be remotely located and isolated from man (it was not until 1954 that their summer nesting grounds in WBNP were discovered) managed to survive. Ironically, the same bonds of tradition which appear to have saved the whooping crane as a small relict breeding population in WBNP now prevent its voluntary return to what was once its principal range. Whooping cranes have adhered strictly to ancestral breeding areas, migratory routes, and wintering grounds, leaving little possibility of pioneering into new regions unless man assists with experimental transplantings.

In addition to the only self-sustaining wild population at ANWR, there are two experimental wild flocks and five captive groups of whooping cranes. One experimental flock was started in 1975 using sandhill cranes as foster parents. It was hoped that the sandhill cranes would aid in the survival of the whooping cranes and teach them to migrate between the Grays Lake National Wildlife Refuge in southeastern Idaho (as well as western Wyoming and southwestern Montana) and the middle Rio Grande Valley of New Mexico. The other experimental flock was introduced in the Kissimmee Prairie of central Florida as a non-migratory population.

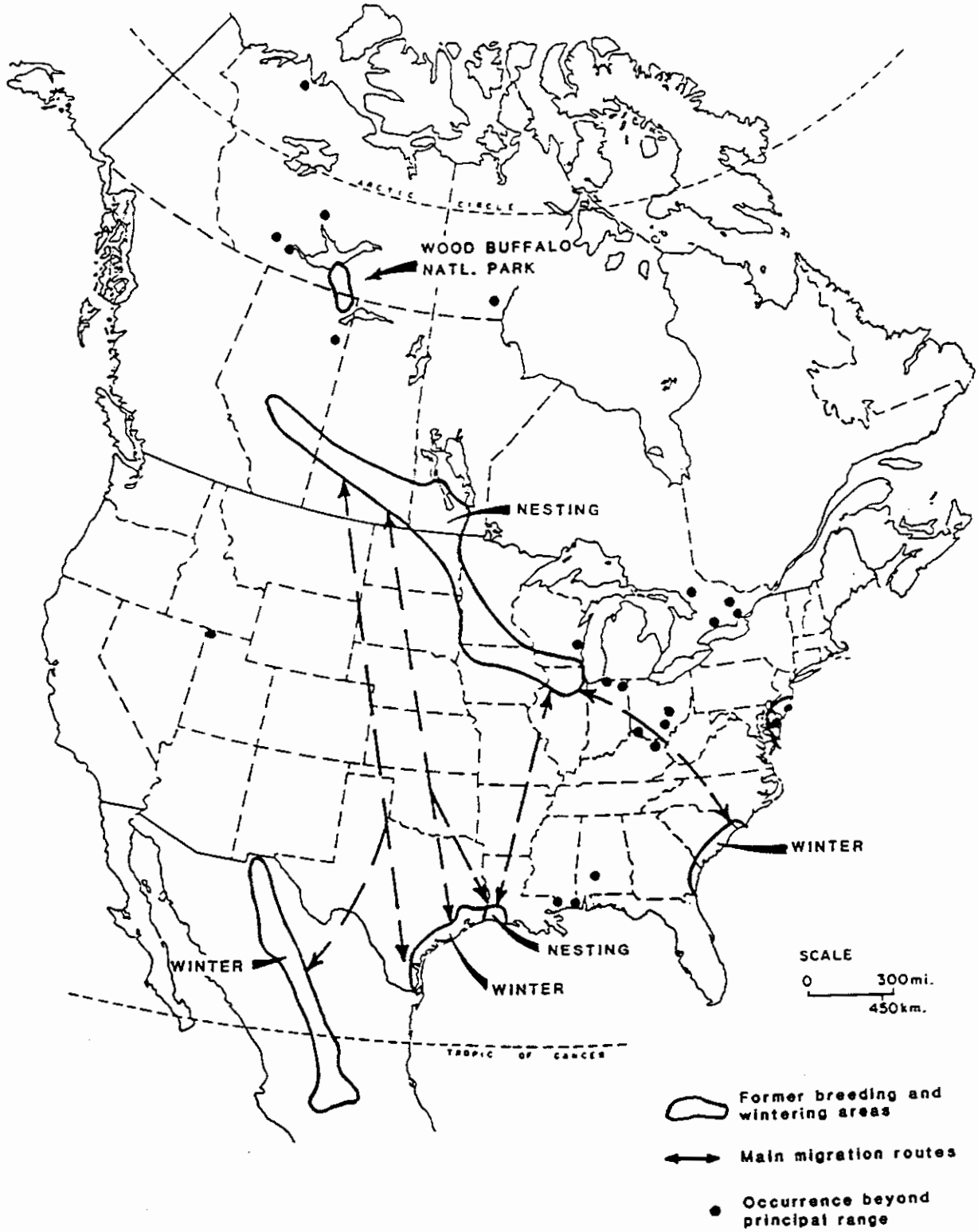

Figure 3. The original range of Grus americana in recent times (adapted from Allen 1952).

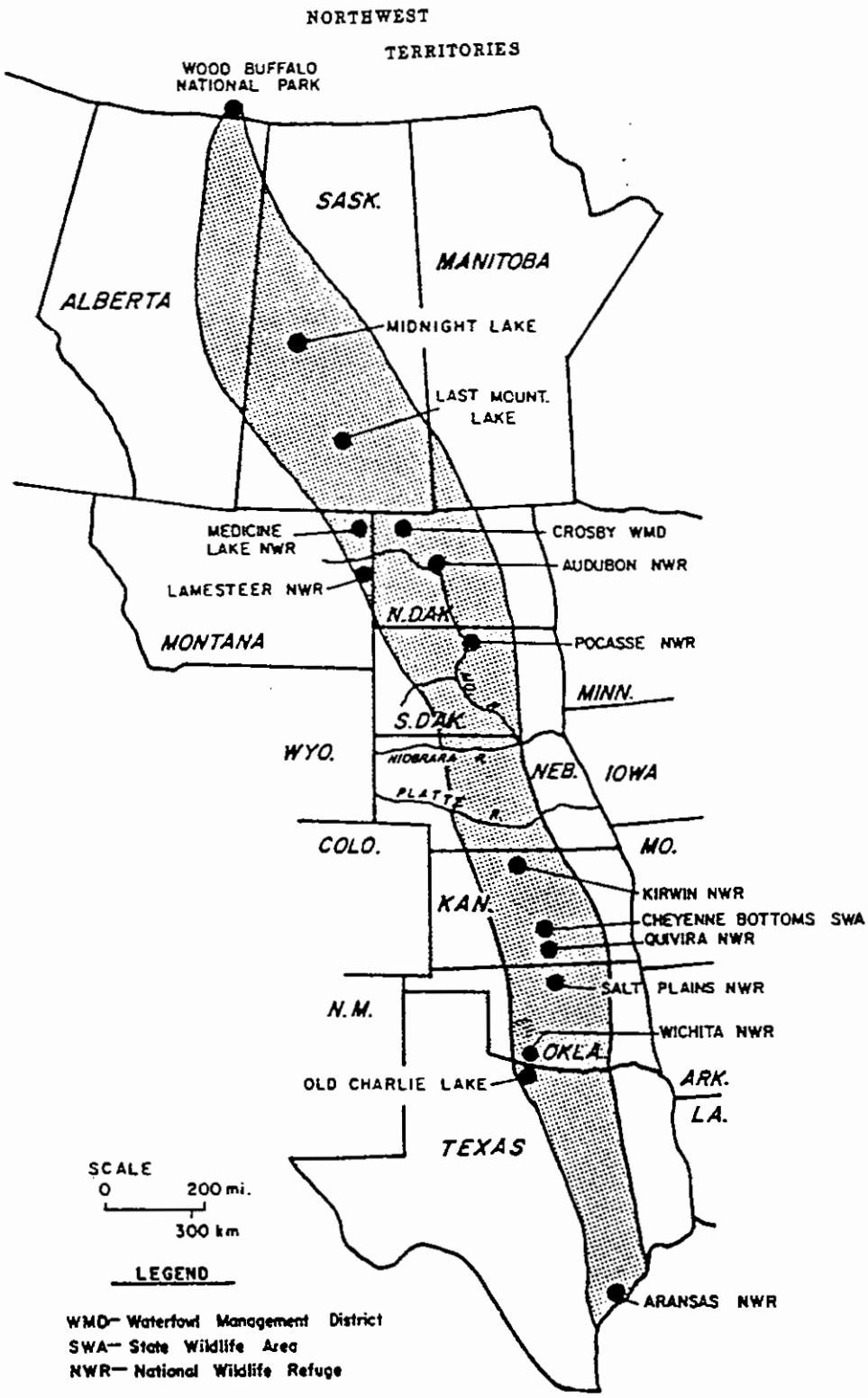

Figure 4. Breeding and wintering areas and migration pathway of the Wood Buffalo National Park - Aransas National Wildlife Refuge population.

Two captive flocks are maintained by the USFWS at Patuxent Wildlife Research Center in Maryland and the International Crane Foundation in Wisconsin. The Canadian Wildlife Service is starting a flock at the Calgary Zoo and additional birds are kept at the San Antonio Zoological Gardens and the Rio Grande Zoological Park in Texas and New Mexico, respectively.

1.3.2.2 Research and Management

Whooping crane management began with the passage of the Migratory Bird Treaty between the U.S. and Great Britain on December 8, 1916. The Act assured legal protection for migratory bird species, including the whooping crane, in Canada and the U.S., and provided a basis for cooperation in enacting laws and regulations to prevent the taking of species requiring complete protection. The next management measure to protect the whoopers was accidental. The Canadian government set aside 10.5 million acres of boreal forest and muskeg area in 1922 as a preserve for the wood bison. It was not until 1954 that whooping cranes were discovered nesting in part of the WBNP. The bird's wintering grounds were next protected in 1937 with the creation of the 55,000-acre ANWR. With additional acquisitions and donations of land, the Refuge now encompasses a total of about 114,000 acres.

While lands were set aside and laws enacted to protect the whooping crane, successful management was impossible without knowledge about the bird's biology and ecology. The USFWS and National Audubon Society (NAS) set up the Cooperative Whooping Crane Project in 1945 to answer these questions. These studies culminated in the principal authoritative monograph on the whooping crane published by the NAS in 1952. During the 15 years prior to this publication and after establishing the ANWR, the whooping crane population increased by only three birds; however, over the next 14 years, with the aid of this monograph and the interest and help of many individuals, organizations, and Federal and State personnel in the U.S. and Canada, the population more than doubled to 48 birds.

With the discovery of the summer nesting grounds on June 20, 1954, research in breeding and colonization of whooping cranes could begin. The Canadian Wildlife Service (CWS) immediately initiated periodic aerial surveys and ground observations on nest construction, site specificity, food resources, and other aspects of breeding biology. Since 1977, additional information on individual birds was possible with the color-marking of prefledged young on the nests. This also enabled the USFWS to begin a migration-monitoring program in 1977 to compile information on the characteristics and locations of stopover sites. This monitoring program is coordinated with the NAS, CWS, and various

States along the migration corridor to increase the collection of information and keep the birds under protective surveillance. Information obtained from color bandings includes individual habits by age, summering locations of subadults, the dynamics and habitat use of wintering subadult flocks, age specific survivorship, the age of initial pairing and breeding, the identification of stopover sites, and wintering and breeding territories used by specific pairs. More precise information on migration ecology and behavior was obtained in 1981-83 using radiotelemetry techniques. The radiotracking program has provided information on migration routes, timing, flight methods and speed, stopover locations and staging areas, habitat use, social behavior, activity budgets, predator-disturbance reactions, and sources of mortality. Color banding was halted in 1988 and the proportion of marked individuals in the wild flock has dropped to 37 percent (51 individuals) in 1994.

Wintering grounds research and management have continued since the late 1940's. Studies of potential whooping crane food and related physical factors began in 1963 by the USFWS. By 1970, the NAS assigned personnel to continue this research, evaluate existing and potential management programs, and to monitor and evaluate potential hazards to the cranes and their winter habitat. Cranes were observed for food habits and other behavioral data, territorial maps were developed, food items were analyzed for availability and possible chemical contamination, and fecal samples were examined for information on food habits and occurrence of disease organisms. Researchers at Texas A&M also studied the environmental effects of oyster shell dredging near ANWR on the birds and their habitat in 1972-73 and conducted studies on upland habitats at ANWR to determine the importance of uplands to the cranes and methods for managing the uplands for the bird's use. This study was completed in 1987.

Various management measures were tried at the ANWR since the prime habitat is limited and natural foods along the coastal tidal flats might be in short supply at times. Cereal and root crops were planted in two 100-acre plots during 1964-68, but were utilized more by sandhill cranes and Canada geese than by whooping cranes. Artificial impoundments were used to increase food supply in intertidal areas. Again, only limited use by whooping cranes was achieved. Baiting with grains has been used experimentally to attract whoopers away from tidal areas when emergency conditions arise, such as oil or chemical spills or during periods of low natural food supply. The major management tool, however, is the modification of plant species composition on uplands to make them more attractive to whooping cranes. Methods used in the past included mechanical cutting, livestock grazing, and controlled burning. Controlled burning is the only method used now to provide an upland food source (acorns) for the cranes. There is some cutting still used around dugouts during periods of drought to protect the cranes from predators

when they visit the dwindling ponds to drink. The cranes only visit these sources of freshwater when salinity in the surrounding marshes exceeds about 24 parts per thousand (ppt).

Additional lands for whooping crane use on Matagorda Island came under the control of the USFWS in 1978 when the Air Force abandoned its 19,000-acre bombing range. In 1983, this land was transferred to and combined with other land owned by the Texas Parks and Wildlife Department (TPWD) on the island. It is now managed as the 44,000-acre Matagorda Island State Park and Wildlife Management Area with the primary objective of benefiting endangered and threatened species recognized by Texas and the Federal government.

Because the prime habitat of the whooping crane was under increasing threat from agriculture and other human activities, the USFWS designated critical habitat for the whooping crane in 1978 to protect land along migration routes. The continued conservation and recovery of the whooping crane would be seriously threatened without these feeding or roosting areas being determined as critical habitat. The designated areas are:

(1) Monte Vista National Wildlife Refuge, Colorado
(2) Alamosa National Wildlife Refuge, Colorado
(3) Grays Lake National Wildlife Refuge and vicinity, Idaho
(4) Cheyenne Bottoms State Waterfowl Management Area, Kansas
(5) Quivira National Wildlife Refuge, Kansas
(6) Platte River Bottoms between Lexington and Dehman, Neb.
(7) Bosque del Apache National Wildlife Refuge, New Mexico
(8) Salt Plains National Wildlife Refuge, Oklahoma
(9) Aransas National Wildlife Refuge and vicinity, Texas

In 1956, the USFWS proposed a captive propagation and release program to bolster the whooping crane population after it was determined that conventional management procedures might be insufficient to save the species. However, several conservation organizations opposed this proposal, so an ad hoc committee known as the "Whooping Crane Advisory Group" was appointed to identify existing problems and offer advice to the USFWS. Studies on sandhill cranes in 1961-62 indicated that collecting eggs was the safest and most convenient method of obtaining and transporting wild stock. The experimental "flock" consisting of one injured bird was initially quartered at Monte Vista National Wildlife Refuge in Colorado and then moved to permanent facilities for the Endangered Wildlife Research Program at the Patuxent Wildlife Research Center in Laurel,

Maryland in 1966. Between 1967 and 1985, 61 eggs were taken from wild nests and the chicks raised to form the nucleus of the breeding flock.

Propagation research at Patuxent was slow in developing because whooping cranes are generally more difficult to raise than sandhill cranes, and most females did not lay eggs until 7-11 years old. Another problem encountered early was a lack of fertile eggs in the captive flock. Artificial insemination was only partially successful, resulting in a total of 73 fertile whooping crane eggs being transferred from Patuxent to Grays Lake, Idaho between 1976 and 1986.

Studies showed that artificial incubation resulted in low survival rates, so 216 fertile eggs from the Wood Buffalo nesting area were transferred to Grays Lake by 1988 to be hatched and reared by sandhill crane foster parents. This technique of cross-fostering whooping cranes also had the advantage of establishing additional, disjunct wild populations of whooping cranes. This would greatly increase the odds for survival if the colony were successful since the existing Aransas flock remains extremely vulnerable due to its relatively restricted breeding and wintering distribution. The Grays Lake population is on the western edge of the known historical range of the whooping crane. The Refuge has excellent crane breeding habitat and the resident sandhill cranes have a similar nesting chronology and often make one prolonged stop at Monte Vista National Wildlife Refuge, Colorado before wintering in the Rio Grande Valley in central New Mexico. This habitat would give the new colony the maximum amount of protection by using national wildlife refuges for breeding, migration stopover, and wintering. Furthermore, it was believed that while sandhill cranes make good foster parents for whooping cranes, behavioral incompatibilities between the two species prevent mixed species pairing and subsequent hybridization.

The results of this cross-fostering experiment have been less than hoped for, mostly due to low numbers of fertile eggs and excessive mortality of the chicks and adults. Of the 289 transferred eggs, only 210 hatched and 85 chicks fledged. Mortality was attributed to inclement weather at the time of hatching, poor habitat and food conditions during three consecutive years, and coyote predation. Even the adult birds suffered losses from fence and power line collisions, disease, and predation, resulting in a relatively small population with few individuals in each year class. This leads to unequal sex ratios among the adults and a lack of successful pairing. Proper adult pairing also was prevented because whooping crane chicks were imprinting on sandhill crane foster parents. There has been at least one hybrid fledgling from a male whooping crane and female sandhill crane recorded. Only four whooping cranes still survive in the Grays Lake flock (August 1995) and the USFWS is phasing out the cross-fostering project.

A second experimental flock (non-migratory) was considered for a 500,000-acre site in the Kissimmee Prairie region in central Florida. The first group of 14 birds were captive-reared at Patuxent Wildlife Research Center and at the International Crane Foundation and released in January 1993, but five of the juveniles were killed by bobcats by March 1993. Additional releases and mortalities have occurred in the experimental flock, bringing the surviving number to 12 by March 1994. Another eight birds were scheduled for shipment to Florida at that time. Even with these initial losses, the whooping crane recovery team considered the experimental releases to be successful. If the birds can be trained to successfully avoid bobcats and other predators, additional releases of 20 or more birds will occur annually for up to a decade or longer beginning in the fall of 1994.

1.3.2.3 Other Accomplishments.

On an international scale, the CWS and USFWS signed a MOU in 1985 providing structure to the past informal cooperative joint efforts in management and research on whooping cranes. The MOU discusses disposition of birds and eggs, postmortem analysis, population restoration and objectives, new population sites, international management, recovery plans, and consultation and coordination. The MOU was renewed for another five years in 1990.

At the national level, the USFWS and 13 states where whooping cranes occur approved a plan in 1985 for Federal-State Cooperative Protection of Whooping Cranes. The plan describes proposed response options when whooping cranes are observed in hazardous situations (disease or environmental contamination) or when cranes are found injured, sick, or dead. Objectives are to provide added protection to whooping cranes, especially during migration, and to increase opportunities to recover and rehabilitate sick or injured birds. A similar plan was implemented in Canada in 1987.

In 1986, the Whooping Crane Recovery Team made up of members from State, Federal, and Canadian agencies, and environmental groups prepared the Whooping Crane Recovery Plan. The plan has the primary objective to downlist the whooping crane from endangered to threatened status by increasing the wild population to 90 nesting pairs by the year 2020. These agencies recognize the whooping crane will never be an abundant species and will most likely require some protection throughout the future. However, chances for survival will be greatly enhanced if the population of the Aransas-Wood Buffalo flock could be increased to at least 40 nesting pairs (there were 45 nesting pairs by summer 1993, but only 28 nesting pairs in 1994 because of a late spring and thaw in the nesting grounds) and two additional, separate and self-sustaining flocks of at least 25 nesting pairs each could be established and maintained for at least 10 consecutive years.

The two wild populations (one of which was to have been the Grays Lake flock, now discontinued) would be established at sites in eastern North America (potential sites include the upper peninsula of Michigan and adjacent areas of Ontario, the Okefenokee Swamp of Georgia, and three sites in Florida).

A Health Advisory Team was established as a result of a 1992 whooping crane health management workshop to coordinate impact and serve as official advisors to the recovery team. The workshop group established uniform health management protocols for disease monitoring in captive and wild flocks and collated information on disease research. The workshop group also identified and prioritized research needs and initiated a centralized, computerized data base on whooping crane mortality.

In 1994, a revised Whooping Crane Recovery Plan was prepared with the same downlisting goals of 90 nesting pairs in the wild population (two wild flocks in addition to the existing Aransas-Wood Buffalo population) by the year 2020. Much work remains to be done since there is only one experimental non-migratory flock in Florida and the Grays Lake flock is being phased out. In addition, the USFWS proposed to promote the growth of the Aransas-Wood Buffalo flock to 1,000 individuals to allow survival as a population despite any future catastrophic event. However, the recovery team does not consider this number as sufficient for species survival as long as there is only one wild flock. The recovery team further realizes that the goal is not likely to be reached before 2020 and a goal for delisting the species will not be set until shortly before downlisting sometime in the 21st Century.

1.4 PROBLEMS AND NEEDS

1.4.1 Erosion Problems

Since the original 9 x 100-foot channel was completed in 1940 and enlarged in 1944, erosion of the marshes along the channel banks has occurred at varying rates, generally averaging about 2.5-4 acres per year (1940-1986) along the entire 20-mile section of GIWW and 2-mile section of Channel to Victoria where they cross the land portion of the whooping crane's critical habitat (Figure 1). Causes for this erosion include natural (e.g., wind waves and sea level rise) and man-made (e.g., vessel created waves and land subsidence) forces. Most of the erosion has occurred on the northwest (mainland) side of the channel which also has most of the prime crane feeding habitat (marshes and ponds). This unfortunate circumstance occurred because the channel was located along the edge of the bays just inside the marsh fringe to protect commercial tows from winds and currents and to lower the cost of dredging by avoiding higher uplands

which requires removing greater amounts of material for the channel. To increase protection from wind, construction and maintenance material were disposed on the bay side of the channel, building the land up (or creating new uplands) on that side and burying marshes. As a result, the only marsh left to be affected by the channel, for the most part, was on the mainland side. Also, because the prevailing winds are from the southeast, natural wind erosion is greatest on the unprotected part of the mainland side of the channel and augments erosion from vessel waves. Although there is an overall net loss, disposal areas now provide protection from wind waves generated across Mesquite and Ayers Bays.

The loss of prime feeding habitat along the GIWW is especially critical because the channel cuts across the center of the crane's winter territories on Blackjack Peninsula. Although some of the cranes are beginning to pioneer new marshes at Welder Flats, Lamar Peninsula (St. Charles Bay), and Matagorda and San Jose Islands, the majority of the adult territories remain at the historic center of their wintering ground in the Refuge. As juveniles mature and begin to pair and carve out their own territory, they tend to remain near their parent's home territory, which causes further subdivision of the available marsh habitat. The USFWS cannot predict the ultimate number of territories that can be crowded into this area, but any loss of marsh (due to erosion or other causes) can only impair the area's ability to sustain the cranes that have chosen to remain there. Therefore, it is critical that erosion be prevented along the GIWW inside the crane's critical habitat.

1.4.2 Spill Prevention Problems

Because the GIWW in the study reach is heavily used by commercial barges carrying petroleum products and other cargos, petroleum industry supply vessels, shrimp boats, and pleasure boats, there is a potential for a collision, sinking, or other accidental spill of hazardous materials when whooping cranes are at the Refuge. Although the navigation industry is heavily regulated and newer barges are constructed with double hulls to prevent spills in an accident, there is always the potential, however slight, for some accident to occur, especially with the less regulated recreational or shrimping vessels. If a spill should occur and is sufficiently large and toxic and occurs at the right location under the right weather conditions, a major portion of the Aransas flock could be lost, severely impairing the survival of the species. A detailed description of the USCE studies to determine the probability of such an occurrence and ways to prevent or clean up a spill are given in Section 4.2.3.

1.4.3 Dredged Material Disposal Problems

Since 1974 when the USCE began confining the emergent disposal areas along Welder Flats and Blackjack Peninsula, disposal operations have not caused any intentional loss of crane feeding habitat. However, because the leveed disposal sites in this area are small (generally between 50 and 100 acres), they have only about 10-20 years of useful life remaining. Several of the sites also are experiencing levee failure from wave erosion on the back (bay) side and from overtopping of the levees due to the disposal site being too small or improperly shaped (long and narrow) for efficient dredged material disposal operations. Several levee failures over the last 10 years have inadvertently caused the loss (generally temporary) of some seagrass and marsh habitat. With time, continuing use of these upland sites will eventually lower their capacity and cause more frequent levee failures and unintentional spills of maintenance material.

Although not part of the recommended plan in the Feasibility Report, a 50-year disposal plan was prepared as a remedy for the problem and discussed in the Main Report (see Screening Results - 50-Year Dredged Material Disposal Plan) and this EIS. The 50-year disposal plan, which can be implemented under O&M authority, calls for the beneficial use of much of the dredged maintenance material to create new marsh for crane feeding habitat and changes in disposal operations to help prevent future levee failures at the upland disposal sites. These changes and the new disposal plan are described in detail in Section 4.2.4. Additional measures to minimize the chances of levee failure will be further explored in the more detailed design phase of the project implementation process.

1.5 PUBLIC CONCERNS

Because the endangered whooping crane has captured public and media attention since its near-extinction in the 1940's, the most significant public concern identified for the study area is the loss of wintering habitat for the bird and the possible catastrophic loss of the bird should there be a spill of hazardous cargo from one of the commercial tows navigating the GIWW through the Refuge. Several public environmental groups, as well as State and Federal resource agencies, have expressed great interest in and concern for the plight of the whooping crane in its last natural wintering habitat. These groups have encouraged the USCE to take all necessary actions to prevent further loss of the crane's critical habitat and protect the bird from potential spills of hazardous materials in the area.

1.6 PLANNING OBJECTIVES

General environmental criteria for navigation projects are identified in Federal environmental statutes, executive orders, and planning guidelines. The basic guidance during planning studies is to ensure that care is taken to preserve and protect significant ecological, aesthetic, and historic values, and to conserve natural resources. These efforts also should provide the means to enhance, maintain, and restore, as applicable, the desirable qualities of the human and natural environment. Alternative plans formulated to maintain navigation should avoid damaging the environment to the extent practicable and contain measures to minimize unavoidable environmental damages. Particular emphasis will be placed on the following:

- Fish and wildlife resource conservation be given equal consideration with other study purposes in the formulation and evaluation of alternative plans. Current guidance specifies that a Federal objective of planning is to contribute to national economic development consistent with protecting the Nation's environment. This is to be accomplished by developing alternative plans that avoid, where possible, adverse environmental effects and, if necessary, compensate for unavoidable impacts. Protection, preservation, and improvement of existing fish and wildlife resources is a primary objective in the planning process;

- Consideration in the project design of the least disruptive construction techniques and methods;

- Mitigation for project related impacts by avoiding, minimizing, and finally compensating for unavoidable resource losses;

- Protection and preservation of endangered and/or threatened species; and

- Preservation of significant historical and archeological resources through avoidance of effects. This is preferable to mitigation since these are finite, non-renewable resources.

The planning objective of environmental and wetland protection of critical habitat for an endangered species as required by the ESA has been incorporated into the formulation of this project. Indeed, the basis for the entire project is to adhere to the requirements of the ESA by protecting the endangered whooping crane and its designated critical habitat

from direct and indirect adverse impacts associated with the operation and maintenance of the GIWW.

1.7 RESOURCE MANAGEMENT OPPORTUNITIES

1.7.1 General

Opportunities were explored in consultation with State and Federal resource agencies to beneficially use dredged maintenance material to create, restore, or enhance the environment in the project area. If the open-bay realignment alternative had been recommended, this plan would have used some of the new-work construction material to create two bird nesting islands, one each in San Antonio and Aransas Bays. The rest of the new-work material and some of the maintenance material would have been used to fill in the existing channel to recreate marsh and seagrass habitat that existed there before 1939. The remainder of the maintenance material under the proposed 50-year disposal plan for this alternative would have been used to create new marshes as described for the recommended plan in Section 4.2.4.

The USFWS expressed interest in rebuilding the Second Chain of Islands in the hope of encouraging brown pelicans to renest at the site. The pelicans have abandoned the area for nesting since 1989. The USCE will consider this plan in the future, but sufficient quantities of suitable material (sand-shell material) have not been found in the GIWW close enough to the site for economical disposal.

Refuge personnel expressed an interest in filling in some of the marsh ponds and lakes that have been deepened by erosion along the GIWW. These prime crane feeding sites are no longer used by the cranes and could be restored for their use if maintenance material were used to fill them in. The USCE cannot fill in these small areas (generally 2 acres or less) without damaging (by burying and tearing up) surrounding marsh because of the size of disposal sites needed for the large dredges and the need to use large tractors to move the heavy disposal pipe around. This would be more detrimental to the crane's habitat than beneficial.

Refuge personnel also expressed an interest in reducing levee heights of the upland disposal sites because whooping cranes are reluctant to approach any large obstruction which may conceal predators. This reduces the value of nearby marsh or seagrass habitat as feeding habitat for the birds. The USCE cannot reduce levee heights on leveed disposal sites that are still needed for disposal operations. However, Disposal Areas (DA) 120 and 121 will be considered as having reached their capacity by 1998 when

construction of the recommended plan is expected to start. At that time, the disposal sites will be abandoned and the levees pushed into the interior of the sites to reduce chances of preventing bird use of the surrounding habitat and to reduce potential erosion of levee material which could adversely impact surrounding feeding habitat.

1.7.2 Beneficial Uses of Dredged Material

Ancillary to the recommended plan of erosion protection and spill containment is a 50-year disposal plan which proposes to use much of the maintenance material from the existing channel to create new marsh habitat in the larger bays off Welder Flats and Blackjack Peninsula. Some of this material will also be used to fill in part of the deeper water of McMullen Lake, reduce the openings to some ponds that have eroded along the GIWW, and extend an island that has eroded at Sundown Bay. These plans have been coordinated extensively with the USFWS and other agencies and are described in detail in Section 4.2.4.

2.0 ALTERNATIVES

2.1 INTRODUCTION

During the ANWR feasibility studies, an armoring plan for the existing channel and three alternative routes for the GIWW were considered, along with a No Action plan, to find the most economical and environmentally acceptable plan that would minimize or eliminate erosion of critical habitat for the endangered whooping crane. Other issues considered with the plans included a spill containment plan to prevent any harm to whooping cranes and a 50-year disposal plan for maintenance material dredged from the GIWW. Due to the complexity of the alternatives, a general screening was used and then the plans were screened in two phases. In the initial screening, the four plans were compared at the same general level and the two "best" plans were carried forward to the final screening. The final screening compared the two surviving plans in greater detail to determine the most cost effective and environmentally acceptable alternative. This alternative is considered the recommended course of action for the project. A No Action plan was also considered at each level of screening as required in USCE project planning.

2.2 GENERAL SCREENING

A general screening was first used to address various types of bank erosion control devices and other options to the operational procedures or the existing channel. These options included widening the channel through the ANWR to a bottom width of 175 feet and several related safety features consisting of limiting the area to one-way traffic, enforced speed limits, and constructing a barge mooring area near Dunham Bay. The USCE has responsibility for evaluating the first and last options and the U.S. Coast Guard has authority for the second and third options.

In determining the method to be used to protect the shoreline habitat from erosion, the USCE consulted with Refuge personnel to determine the shoreline that needed protection and the biological parameters that should be taken into consideration during formulation and design of erosion structures. Table 13 in the Main Report describes the various types of structures considered and their advantages and disadvantages. The recommended structure, an articulated concrete mattress, has many environmental, engineering, and economic advantages. Refuge personnel also indicated a preference for this armoring structure if this plan is recommended for authorization.

The 175-foot channel was suggested as a means to improve navigation safety and minimize the potential for collision and spill of toxic cargo which could cause the death of a number of whooping cranes or destroy some of their habitat. This option was not economically feasible because of the added new-work (1.8 million cubic yards) and maintenance material (an additional 4 million cubic yards over the 50-year project life) that would have to be handled. This would increase the size of disposal areas needed when the USCE is already faced with limited environmentally acceptable options and space for disposing material in the current 50-year disposal plan. Also, after further consideration by the resource agencies, this option was not acceptable because of the possibility the wider channel would enable the towing industry to double the barges in a tow (use a side by side configuration) to haul more cargo. This may actually increase the potential for a larger spill in an accident and adversely impact more of the critical habitat, the opposite of what was intended.

One-way traffic and speed limits were safety options suggested by resource agencies to reduce the risk of collision and boat wakes (reduce erosion) inside the ANWR. One-way traffic is not feasible because of the traffic delays (economic burden for the navigation industry) and enforcement problems for the Coast Guard (manpower requirements). Similar problems also exist for enforced speed limits. Before the Coast Guard can enforce speed limits, the area would have to be designated as a Regulated Navigation Area (33 CFR 165.10-165.13). Designating an area for speed limits and acquiring approval by the Coast Guard District office in New Orleans or the Headquarters in Washington, D.C. is a difficult and time consuming process. Also, enforcement would be difficult because of the manpower and logistics required for such a remote site with a long channel to patrol. Therefore, these options were not considered to be feasible.

The last safety feature suggested by the towing industry and Refuge personnel, a barge mooring area near Dunham Bay, is needed to secure a tow out of the channel in case of inclement weather (heavy fog or high winds) before crossing Aransas or San Antonio Bays. This would eliminate the need for tow captains to run a barge up against a bank and destroying some of the marsh when they need to tie up. A barge mooring area already exists near Welder Flats and a site near Dunham Bay would complement the existing facility and increase safety in the area. This option will be considered further during the PED phase.

2.3 INITIAL SCREENING OF ALTERNATIVES

Early in the reconnaissance phase and throughout the feasibility phase, scoping meetings were held with concerned State and Federal resource agencies to solicit their

input for various options to reduce erosion of critical habitat while maintaining navigation in the inland area. Two rerouting alternatives (and one variation of one of the routes) were suggested and considered here. These routes are shown in Figure 5. One of the routes suggested by the agencies would take the channel north of the ANWR and outside the critical habitat. The other route would follow the original 1909 5x40-foot channel through the open bays south of the Refuge. Although this route would remove navigation-induced erosion of the critical habitat, it would not stop erosion by natural processes. Also, this route would still be inside the critical habitat. As a compliment to the northern realignment, a southern or barrier island route was considered because it would also be located outside the boundaries of the critical habitat. This route was never considered a viable alternative by any of the resource agencies. The last two alternatives considered in the initial screening were armoring the existing route and a No Action plan. Table 1 provides a comparison of each alternative and its impacts to each major habitat type in the study area.

2.3.1 No Action (Future Without Project)

The No Action Alternative is the base condition from which all other alternatives are compared. The purpose of this alternative is to forecast the most probable future of the study area, usually over the project's 50-year economic life, without the project (if the project were not built). This forecast, not the existing condition, will provide the environmental baseline to compare all other alternatives for economic benefits and environmental impacts. The purpose of these comparisons is to clearly and accurately describe project-related economic and environmental benefits and costs so project decision-makers at all levels will be fully aware of the environmental consequences of their actions.

The GIWW is an important, safe, low-cost means of transporting goods along the Texas coast and links the coastal ports with the vast national inland waterway network. The reach of the GIWW through the study area is an important link in the waterway that connects the upper and lower Texas coast with its many petroleum-related, agricultural, and other manufacturing industries. If this link were broken, about 14 million tons of commodities would be forced to find alternative means of transport.

The GIWW in the study area has been maintained for navigation since 1940 and erosion of the banks has been occurring during that period. The USFWS raised the first concerns about erosion during its review of a 1988 Biological Assessment (BA) prepared for routine maintenance of a section of the channel. In 1989, after preparing another BA for dredging another reach of the channel, the USCE entered into Section 7 consultation

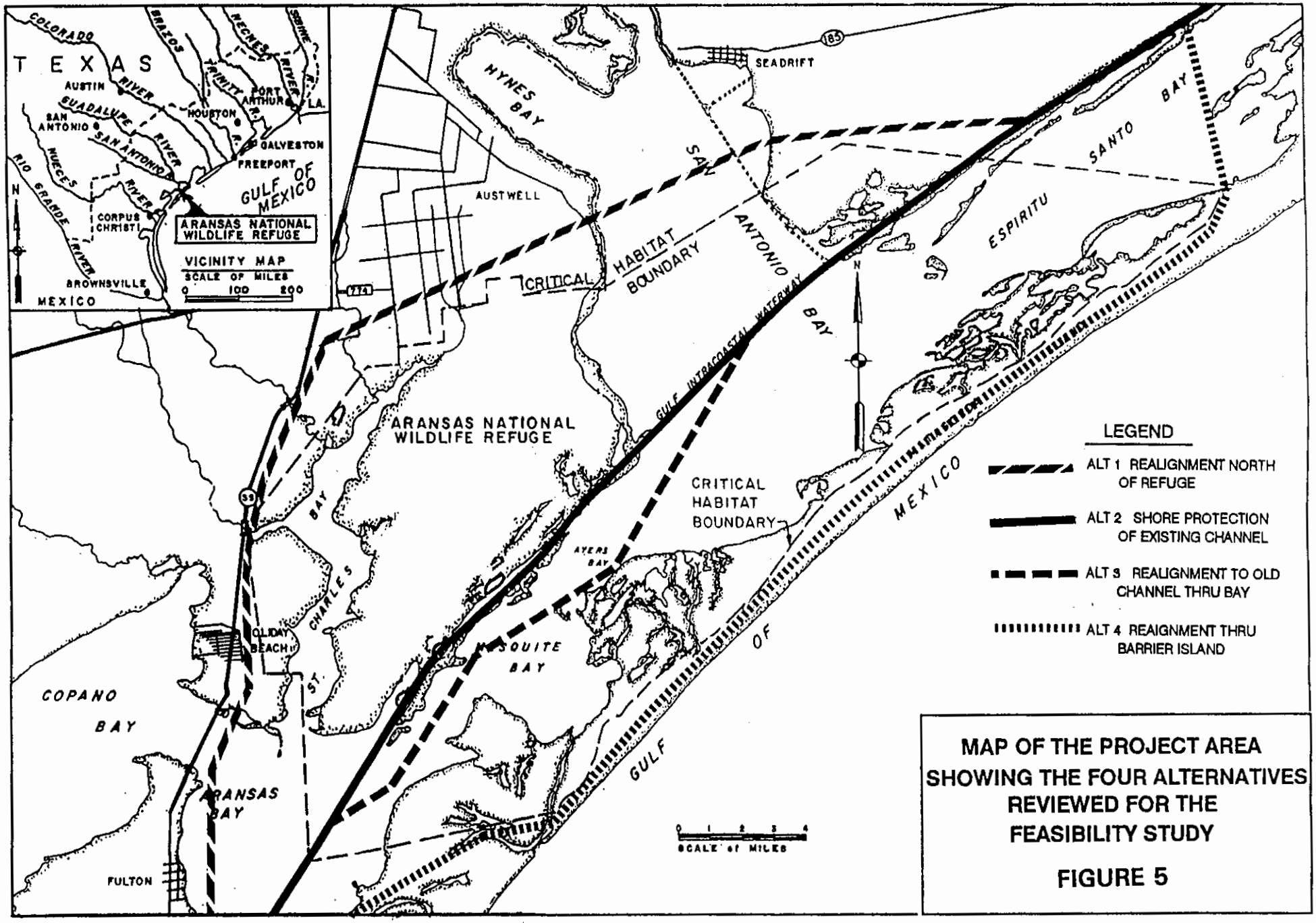

MAP OF THE PROJECT AREA SHOWING THE FOUR ALTERNATIVES REVIEWED FOR THE FEASIBILITY STUDY

FIGURE 5

Table 1. Direct and indirect habitat losses and gains (acres) from construction of new channel cut, right-of-way, disposal areas (DA), and beneficial use sites for the Aransas alternatives. NA - Not Applicable or Available.

Habitat Type	No Action	Northern Alignment		Existing Alignment		Open-Bay Alignment		Barrier Island Alignment	
LOSSES		Upland DA	Channel Cut	Upland DA	Channel Cut	Upland DA	Channel Cut	Upland DA	Channel Cut
1. Open Water									
Bay Bottom	0	NA	307	NA	0	NA	550	NA	158
Seagrass	0	NA	10	NA	0	NA	10	NA	20
Oyster Reef	0	NA	20	NA	0	NA	45	NA	0
2. Wetlands									
Fresh	0	0	66	0	0	0	0	NA	236
Salt-Direct	64	0	15	0	0	0	0	NA	178
-Indirect	1,075	NA	NA	NA	NA	NA	NA	NA	NA
Sand/Mud Flats	0	0	5	0	0	0	20	NA	150
3. Uplands									
Barrier Island	0	0	0	0	0	0	0	NA	1,524
Oak Mottes	0	0	30	0	0	0	0	NA	0
Coastal Prairie	0	2,395	1,930	153	0	0	0	NA	0
GAINS									
1. Beneficial Uses (Marsh Creation)	0	0		1,614		1,544		0	
2. Mitigation									
Salt Marsh	0	285		0		775		2,475	
Fresh/Brackish Marsh	0	196		0		0		708	
Seagrass	0	16		0		15		30	
Oyster Reef	0	25		0		57		0	
Oak Mottes	0	46		0		0		0	

under the ESA. After lengthy coordination, a plan of action to halt erosion was worked out using short-, mid-, and long-term solutions (see the Study Purpose and Scope section of the Main Report for a full discussion of these solutions).

Armoring the banks to prevent further erosion was started in 1992. As part of the USFWS Biological Opinion (BO), the USCE will continue maintaining the GIWW within the whooping crane's critical habitat and armoring at least 2,000 feet of shoreline each year until the feasibility study is completed and a long-term solution developed, authorized, and constructed (estimated to start in 1998). However, if the feasibility study concludes with a No Action recommendation, the USFWS will issue a new BO stating that the GIWW is indirectly contributing to the erosion of designated critical habitat and that the USCE is exceeding its incidental take of 1 acre of critical habitat per year. Under the ESA, this opinion would immediately put the USCE in violation of the ESA and vulnerable to lawsuit by one or more environmental groups to enforce Sections 7 and 9 of the ESA.

Abandonment of the GIWW by the USCE would not avoid the lawsuits and would create other problems. Upon cessation of maintenance dredging, navigation traffic through this reach will not stop immediately, but sediment will fill the channel at varying rates until one section finally shoals to about 6 feet, the limit for economical commodity transport. The most critical areas are located at both ends of the Refuge (Blackjack Peninsula) and have a dredging frequency of 2-3 years. These areas were last dredged in 1992 and 1993 and are scheduled for maintenance dredging in 1996 (see Table 6 of the Main Report for potential vessel impacts). Before traffic is halted, however, shoaling will cause delays and increase costs by requiring one-way traffic and light-loading of barges. Under present shoaling conditions, traffic will likely cease on this section of waterway around 2003-2004, but a catastrophic event, such as a storm, could hasten closure anytime after 1995. After closure, commodities would be transported by the next least costly means. This would solve one potential problem associated with traffic crossing the Refuge, the possibility for a toxic cargo spill. However, parts of the critical habitat that remain unprotected would continue to erode from natural processes.

Approximately 18,000 feet of the most critically eroded shoreline have been protected by late 1995 under O&M authority, but if no action is taken at the end of the feasibility study to protect the remainder of the critical habitat from further erosion, the USCE could be sued for violating the ESA. If maintenance operations cease for any reason between 1995 and 2003, erosion from continued navigation use and natural causes will occur at about 2 acres or more each year. After 2003 and up to the end of the study period of analysis (2051), it is estimated that natural erosion (navigation-induced erosion will have ceased) will occur at about one acre per year.

The direct loss of marsh due to erosion is estimated at about 64 acres for the period 1996-2051 (Table 1). However, there is an indirect loss of habitat when erosion removes marsh that is isolating ponds and lakes from the open water of the GIWW and exposes them to wave action. This allows waves and currents to enter and scour the soft bottom and deepen the pond until it is not useable by feeding cranes. This loss is estimated to be about 1,075 acres over the period of analysis, most of which will occur in McMullen Lake and Sundown Bay. This loss may not jeopardize the survival of the whooping crane as a species, but it will limit the ability of the population which has already established territories along the GIWW to survive, particularly during periods of low food availability. During these times of stress, the cranes need larger areas to forage in order to survive.

2.3.2 Alternative 1 - Northern Alignment

This alignment would reroute the GIWW north around the Refuge and critical habitat (Figure 5). The new channel would cut across coastal prairie (some of it under cultivation) and through San Antonio and Aransas Bays, for a total length of about 43 miles. All new-work and maintenance material from the land cut would be contained in 14 new upland disposal areas, and the material from the reach across San Antonio Bay would be stored in two large upland disposal areas shown in Figure 15 of the Main Report. All material dredged from the channel through Aransas Bay will be placed in 10 unconfined, open-bay disposal sites.

This plan presents many environmental problems for the study area. Construction on the inland reach north of Welder Flats would remove mostly environmentally nonsensitive upland prairie vegetation that currently is used for cattle grazing and a small amount of fringing marsh (about 10-15 feet wide) along the shore (Table 1). Construction would avoid the intertidal flats, except for the northern limit of a small creek, but the GIWW would indirectly affect Welder Flats by interrupting surface drainage from the north, which may alter salinity gradients in the intertidal and saline pothole region where the whooping cranes feed. Surface drainage can be maintained through an inverted siphon under the GIWW, but may still lead to a small change in salinity gradient patterns, especially since it is doubtful that existing patterns of sheet flow would be fully replicated as large areas south of the channel and between siphons would receive less than normal flows while small areas directly south of the siphon outlets would receive more water than normal.

The land cut across Blackjack and Lamar Peninsulas will cross a variety of habitats, including some fringing marsh, farmland, prairie, and oak motte. One of the most important habitats to the local wildlife that will be removed on Lamar Peninsula is the pothole-live oak community. Numerous potholes among the live oaks are wind-ablated features that are

fed by underground water sources (perched water table). Each pothole has its own unique combination of flora and fauna. The larger potholes have a permanent water supply and provide freshwater for migratory waterfowl and water and food for the local wildlife during droughts. Mitigation potholes can be scraped out of the prairie on the ANWR to replace those lost during construction. However, it is not known what effect the GIWW will have on the water table that feeds the potholes near the proposed route.

There is a great deal of concern by the resource agencies over the efficacy and efficiency of inverted siphons to compensate for the channel cutting the subsurface water flow. A large quantity of earth will be removed and the hydrology of the area may be altered. The area is dependent on subsurface water to replenish potholes and maintain certain plant species. Once the shallow clay strata underlying the surface sands are penetrated, the subsurface water flows will be interrupted which could affect the ecosystem of the potholes and surrounding area. Unfortunately, there are no data available to help resolve this problem.

The estimated direct impacts to each habitat type along the path of the proposed route are listed in Table 1. The upland disposal areas would be located to avoid any sensitive environmental areas. Open-bay disposal sites would be located to avoid oyster reefs and seagrass beds to the extent possible. Mitigation type (habitat) and size to compensate for the loss of oak mottes, marsh, seagrass beds, shallow bay bottom, and perhaps some oyster reefs from direct and indirect impacts is listed in Table 1. The leveed disposal areas located along the existing GIWW where it crosses the tip of Blackjack Peninsula and Welder Flats would be pushed into the channel to create shallow water habitat suitable for marsh and seagrass beds. The rest of the existing channel will shoal naturally over time to create shallow bay bottom as before.

2.3.3 Alternative 2 - Existing Alignment

Keeping the existing alignment would eliminate new-work dredging and disposal problems and any construction-caused impacts to habitat in the study area (Table 1). However, some method must be used to protect the shoreline habitat from erosion and new disposal areas must be located to contain dredged maintenance material when existing upland leveed sites are depleted. The recommended erosion control structure, an articulated concrete mattress, has many engineering and economic advantages, but its primary biological advantages are its low profile which allows periodic very high tides to flood across the marsh as sheetflow; its flexibility which allows it to conform to bank irregularities; its open cell features which allow some invasion of the mats by sediment, plants, and infauna; and the fact that it does not represent a rigid, hardened structure that

could rip open a barge, causing a spill that could threaten nearby whooping cranes and their wintering habitat.

In addition to the shoreline marsh that needs protection from erosion, other open water habitat, such as Sundown Bay which is a prime feeding habitat for many whooping cranes, must be protected. Because Sundown Bay is a large, open, shallow (1-2 feet deep) bay, a different type of erosion control structure is needed to prevent the bay from being washed out and deepened. Concrete mats cannot be used here because they need a structure (bank) to rest on. Therefore, grout tubes will be used to create a series of long barriers parallel to the channel which will be barely emergent at low tide (Figure 6). The distance from the GIWW and the height relative to mean low tide will be determined during the Preconstruction Engineering & Design (PED) phase after coordination with the resource agencies and the navigation industry. The tubes would mimic oyster reefs that exist in the area and, in time, would be covered by oysters to form a new reef system. Initially, the tubes were designed as a series of 1,000-foot sections with 100-foot openings between them. However, after consulting with resource agencies, it was decided to run circulation models of Sundown Bay to see if shorter tube sections with more openings between the sections (not larger openings) would be needed to maintain present water and circulation patterns in the bay. This analysis will be completed during PED and the tube design altered according to the results. Grout tubes will also be placed in other locations under the 50-year disposal plan to reduce openings to adjacent bays and lakes which are eroding and to protect some beneficial use sites (see Section 4.2.4 for further discussion).

Under this plan, about 84,000 feet of shoreline along Blackjack Peninsula and Welder Flats will be protected by concrete mats. Approximately 18,000 feet are already in place (1992 through 1995) and at least another 4,000 feet will be constructed by the end of 1997. The remainder will be constructed between 1998 and 2000 under this plan (Table 2). About 10,500 feet of grout tubes will be placed across Sundown Bay and other natural marsh openings to prevent erosion. After the erosion protection is completed, approximately 64 acres of valuable marsh and 1,075 acres of pond-lake habitat will be saved from future erosion with this plan (see Table 1 - No Action). There are no mitigation requirements associated with this plan. A discussion of the 50-year disposal plan and beneficial uses of dredged maintenance material is given in Section 4.2.4.

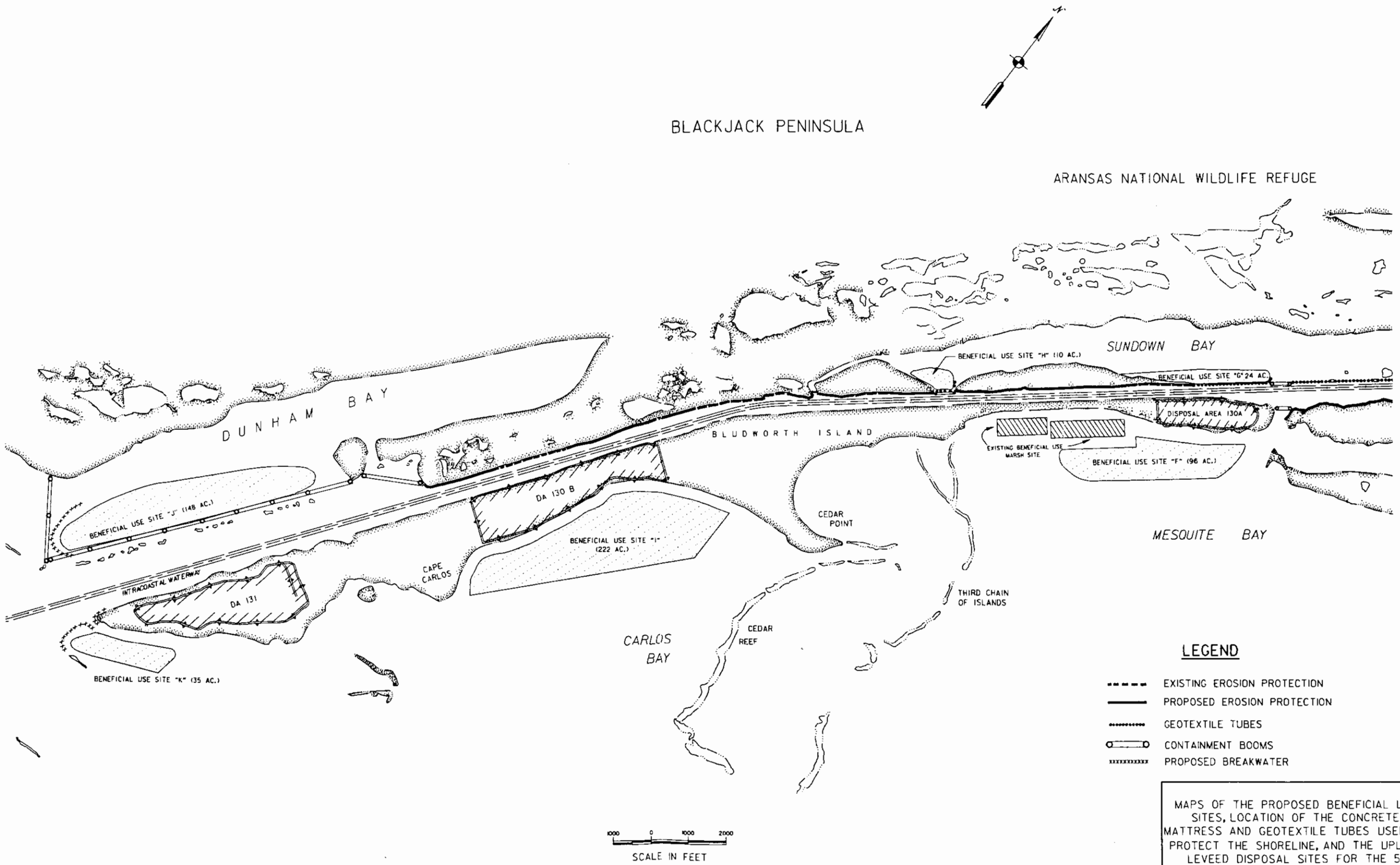

MAPS OF THE PROPOSED BENEFICIAL USE SITES, LOCATION OF THE CONCRETE MATTRESS AND GEOTEXTILE TUBES USED T PROTECT THE SHORELINE, AND THE UPLAN LEVEED DISPOSAL SITES FOR THE 50 YEAR DISPOSAL PLAN.

FIGURE 6

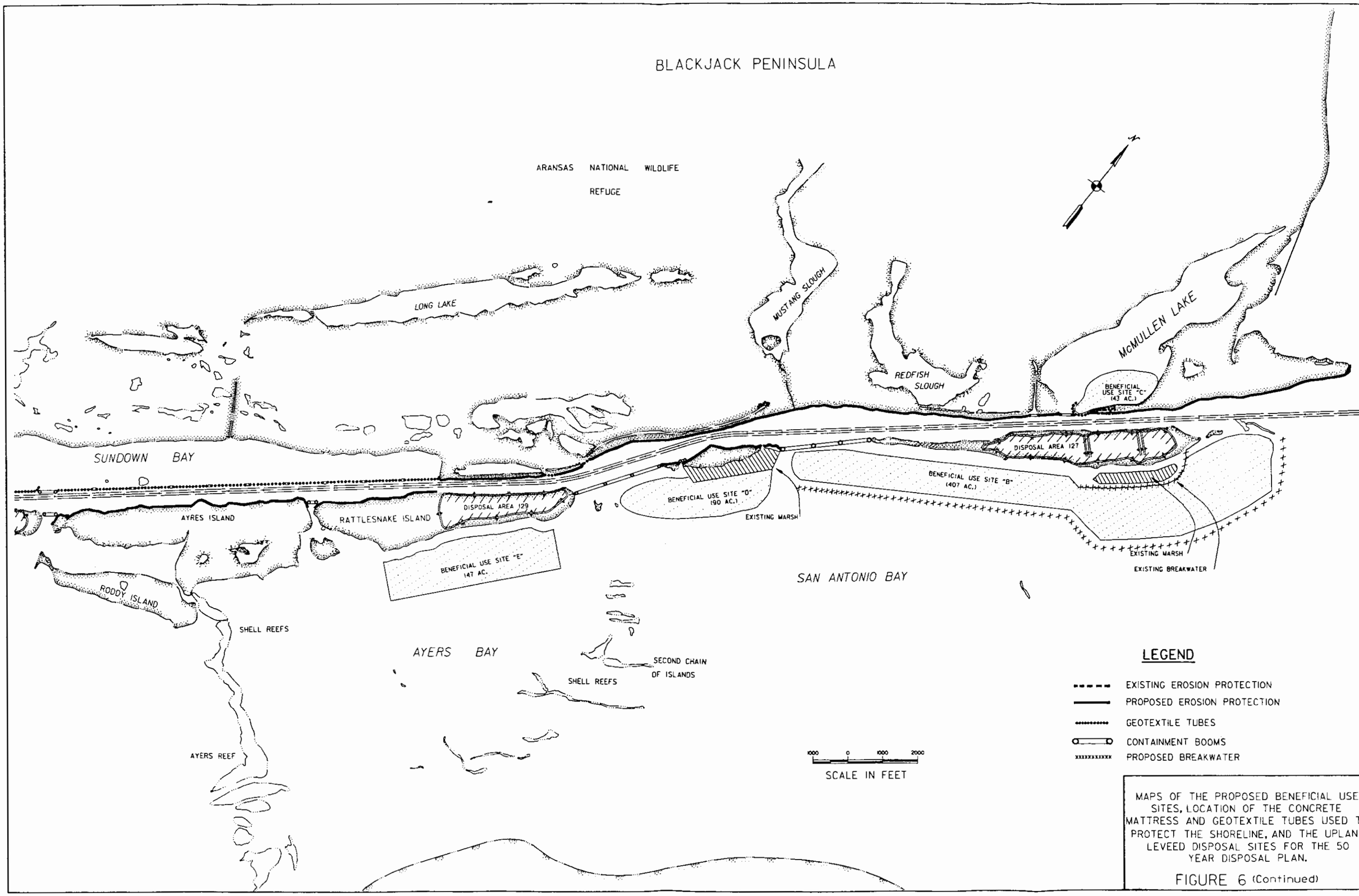

MAPS OF THE PROPOSED BENEFICIAL USE SITES, LOCATION OF THE CONCRETE MATTRESS AND GEOTEXTILE TUBES USED T PROTECT THE SHORELINE, AND THE UPLAN LEVEED DISPOSAL SITES FOR THE 50 YEAR DISPOSAL PLAN.

FIGURE 6 (Continued)

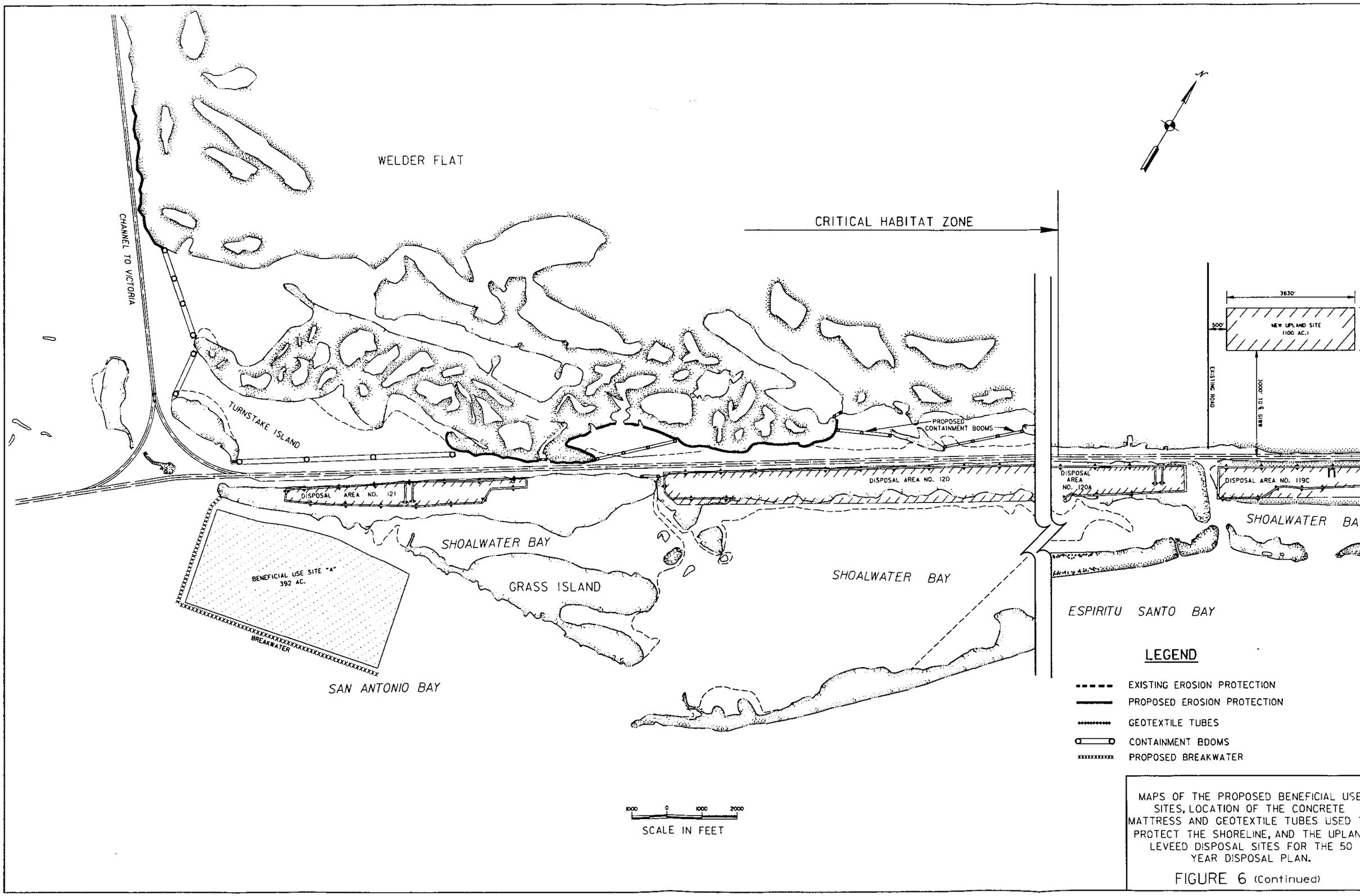

MAPS OF THE PROPOSED BENEFICIAL USE SITES, LOCATION OF THE CONCRETE MATTRESS AND GEOTEXTILE TUBES USED T PROTECT THE SHORELINE, AND THE UPLAN LEVEED DISPOSAL SITES FOR THE 50 YEAR DISPOSAL PLAN.

FIGURE 6 (Continued)

Table 2
The length (feet) of shoreline along the GIWW inside the whooping crane critical habitat that has been or will be protected by cellular concrete mattress.

Year	Construction completed by O&M	Mat to be constructed by O&M	Recommended construction in Feas. Rep.	TOTAL
1992	1,968	-	-	1,968
1993	7,000	-	-	7,000
1994	6,967	-	-	6,967
1995	1,750 (Approx)	-	-	1,750
1996	-	2,000	-	2,000
1997	-	2,000	-	2,000
1998	-	-	44,250	44,250
1999	-	-	17,870	17,870
TOTAL	17,685	4,000	62,120	83,805

2.3.4 Alternative 3 - Open-Bay Alignment

This alignment would closely follow the original 1909 5x40-foot channel through San Antonio, Ayers, Mesquite, Carlos, and Aransas Bays (Figures 2 and 5). The original route was chosen for the open-bay plan because it would minimize damage to environmentally sensitive habitat (oyster reefs and seagrass beds) by using the old cuts that still exist in the major oyster reefs that cross the bays. Although still located within the critical habitat, the new channel would not contribute directly or indirectly to erosion of the marsh habitat on Blackjack Peninsula. However, the banks along the existing channel would still be subject to natural erosion processes. The new channel would be about 19 miles long.

Habitat types and amounts that would be directly affected are given in Table 1 along with mitigation quantities. Not given in the table are two 50-acre bird islands that will be constructed with new-work material, one each in San Antonio and Aransas Bays. The rest of the new-work material will be placed in existing confined upland disposal areas and then pushed into the existing channel once the alternate route is completed. Additional dredged

maintenance material will be used to finish filling the existing channel and marsh, seagrass, and oyster reefs planted or constructed on the new bottom as mitigation in the amounts given in Table 1. The remainder of the maintenance material dredged over the 50-year life of the project will be placed in beneficial use sites to create approximately 1,500 acres of new marsh for the whooping cranes to feed in. These beneficial use sites will correspond approximately to those shown in Figure 6 for the existing alignment.

Erosion protection for the banks along Welder Flats will be needed under this plan as in the existing alignment plan. Dredging quantities for new-work and maintenance material are given in Table 18 of the Main Report.

2.3.5 Alternative 4 - Barrier Island Alignment

This alignment would avoid the critical habitat and the ANWR by routing the GIWW south through the barrier islands along the Gulf of Mexico. The new channel would exit the existing channel at the old Air Force Cut, cross Espiritu Santo Bay and run the length of Matagorda and San Jose Islands before crossing Aransas Bay to rejoin the existing GIWW, for a total length of about 43 miles (Figure 5). Although this route is outside whooping crane critical habitat, it would directly impact a large area of environmentally sensitive habitat (Table 1). Along with valuable seagrass and marsh habitat, the channel would cut through fresh to brackish wetlands on the barrier islands and directly remove over 1,500 acres of dune-brush-grassland habitat that adds diversity to the barrier island wildlife. Salt intrusion along the channel would indirectly impact any nearby fresh/brackish wetlands and eliminate or substantially diminish their flora and fauna, lowering the ecological diversity of the barrier island communities.

Because of the channel's proximity to the Gulf of Mexico along most of its length, all new-work and maintenance material would be deposited in the surf zone, eliminating the need for upland or open-bay disposal sites for this alignment. However, disposal for the bay reaches would require longer pumping distances to reach the Gulf. One other adverse consideration for this route is that dredging along Matagorda Island could be hazardous for dredge equipment and operators because the island was used as a gunnery and bombing range during and shortly after World War II.

Since the new channel would be completely outside the critical habitat, there will be no need to continue armoring the existing channel. Erosion of the existing channel would continue due to natural causes once the new channel is completed. However, because most of the barrier islands along the Texas coast are eroding from the Gulf side, the channel would be subject to breaching from hurricanes and storm events.

2.4 COMPARISON OF PLANS

Table 22 of the Main Report gives a comparison of the average annual costs for all four alternatives considered in this study. Alternative 2 (armoring the existing channel) and Alternative 3 (open-bay alignment) had the lowest costs. These two plans also had the least environmental impacts and provided the greatest potential environmental gains through the beneficial use of dredged maintenance material to create new marsh habitat. Alternatives 2 and 3 were identified as the most preferred plans and were considered in more detail in the final screening process. A comparison of selected economic, environmental, and socioeconomic components of these plans is depicted in Table 3.

2.5 FINAL SCREENING OF ALTERNATIVES

The final screening is a comprehensive comparison of the two most cost effective and least environmentally damaging plans considered in the Initial Screening Section, as well as the No Action alternative. Additional details considered in this screening include such intangible benefits as safety issues and spill containment plans. Additional disposal options are also evaluated for each plan and minor alternatives under each plan are considered at the request of the resource agencies (e.g., widening the existing channel next to Blackjack Peninsula and straightening the open-bay alignment to decrease navigation hazards).

2.5.1 No Action (Future Without Project)

This alternative was discussed in detail in Section 2.3.1 and has been eliminated from further consideration since an economically viable and environmentally acceptable plan to continue navigation in the study area has been identified (see the Description of Selected Plan section of the Main Report). Additionally, the No Action plan was unacceptable for environmental reasons because it would not prevent continuing erosion of critical habitat in the study area, and it would have put the USCE in a jeopardy status under the ESA.

2.5.2 Alternative 2 - Existing Alignment

This plan consists of continuing maintenance of the existing channel with added bank armoring to protect critical habitat from erosion. Only one disposal plan was considered during initial screening to provide a basis of comparison with the other plans. In this screening, two additional disposal options are considered for this and the open-bay alternative in order to identify the most cost effective and least environmentally damaging

Table 3. Summary of Aransas NWR project alternatives considered during initial and final screening for selected economic, environmental, and socioeconomic components.

Component	No Action	Alternative 1	Alternative 2	Alternative 3	Alternative 4
Average Annual Cost ($ millions)	NA	25.8	8.9	15.8	21.6
Habitat Impacts (ac)	1,139	4,778	153	625	2,266
Mitigation Required (ac)	NA	568	0	847	3,213
Beneficial Uses (ac)	NA	0	1,614	1,544	0
Endangered Species	-	+	+	+	+
Cultural Resources	+	+	+	-	-
Socioeconomic Impacts	-	+	+	+	+
Continued Navigation	No	Yes	Yes	Yes	Yes
Planning Uncertainty	NA	Medium	Low	Medium	High

NA = Not Applicable
\- = Unquantified negative effect
\+ = No or positive effect

plan. The other disposal options include offshore disposal using a clamshell dredge to place maintenance material in a barge for transport offshore and beach (surf) disposal using a hydraulic pipeline dredge to pump the material across the bays and barrier islands to the Gulf beaches.

Both the offshore disposal and beach disposal options would remove any continuing impacts to critical habitat caused by presently used disposal operations, but they are more expensive due to the transport distance (Table 23 in the Main Report). Disposal costs could be reduced and the environment could benefit by using the dredged material locally to construct new marshes for whooping crane use.

The last major concern of the USFWS for this plan is the threat of a major toxic spill in the channel inside the Refuge. A spill at this site while the cranes are present could cause deaths and/or contamination and destruction of a major part of the marsh (critical habitat) in the Refuge. Two reports in 1992 and 1994 evaluated the most likely and worst case spill scenarios in this section of GIWW, the effects on the whooping crane and its habitat, and the relative probability of a spill in the existing channel and the alternative open-bay route (see Appendix A for these reports). Because spills are very rare events on the Texas section of the GIWW, the statistical probability of one occurring in the study area was extremely low. The resource agencies were not convinced the probabilities of a spill calculated for the study area were accurate. Therefore, a qualitative analysis of the relative hazards of the two alternative routes was completed using the "Delphi Technique". This consisted of a panel of experts from the navigation industry, Coast Guard, USCE, and State and Federal resource agencies who evaluated the relative safety of navigation and spill containment for the existing and open-bay routes. A full description of the spill containment plans is provided in Section 4.2.3 and a discussion of the Delphi meeting is given in the Final Screening section of the Main Report.

The panel determined that the existing channel was the safest route for navigation because it offered protection from high winds and cross currents and provided visible landmarks to aid navigation. The merits of the open-bay route will be discussed in the next section. The panel also determined that clean-up of a spill would be much easier if contained in the existing channel rather than in the open bay. Most of the panel members agreed the existing alignment was the "best" alternative considered.

2.5.3 Alternative 3 - Open-Bay Alignment

This plan would route the GIWW through the open bays south of the Refuge and utilize the historic passes cut through the "Chain of Islands" and other major reefs in the

bays for the 1909 channel (Figure 5). Although this route would minimize damage to the oyster reefs, environmental damage would still be much higher compared to continuing use of the existing channel. At least 550 acres of bay bottom would be deepened and some areas of seagrass and oysters would be impacted (Table 1). The lost bay bottom would impact the commercial shrimping industry to a slight extent by reducing some productivity of resident infauna (shrimp food) in the area.

The greatest damage, however, may result from a change in the hydrology of the area. Freshwater currently flows from the Guadalupe River down San Antonio Bay and turns north and south to flow through Espiritu Santo Bay and the smaller bays leading to Aransas Bay, respectively. The bays are dependent on fresh water to dilute the higher salinity water flowing in from the Gulf passes and to offset high evaporation in the area. If the marshes along the edges of the bays become too salty, their value as a nursery for marine organisms is reduced, decreasing the food supplies available for whooping cranes and other predators (birds and fish) in the area. The channel would act as a funnel to move the freshwater quickly through the middle of the bays, interrupting the mixing process along the edges (marsh) of the bays.

Another environmental impact resulting from this route is the added disturbance and potential contamination of the islands in the bays. Several of these islands are used as nesting sites by colonial waterbirds and potentially by the endangered brown pelican which nested there as recently as 1989. Other endangered species, such as the piping plover, feed on the sand/mud flats along the edges of the islands and could be forced to abandon the sites if there is too much manmade activity in the area.

Some of the benefits of this route include taking the channel out of the Refuge which will decrease bank erosion and creating additional marsh habitat through the beneficial use of dredged maintenance material. The offshore disposal plans discussed above are more costly (Table 24 of the Main Report) than the beneficial use plan and would not benefit the area except by removing the material from the area. Therefore, these disposal options are not considered viable for this alternative.

Although this route is outside the Refuge, a cargo spill here would be much worse than in the existing channel because the spill could still get into the marshes on the Refuge and those in the surrounding bays and barrier islands. Because the bays in the area have broad, shallow edges with very soft mud, it would be extremely difficult to get bulky and heavy spill containment and clean-up equipment into the area. The numerous sloughs and bayous running though the marshes would quickly spread the contaminants throughout the marsh, polluting the grass and possibly harming whooping cranes and other wildlife. The

Delphi panel considered this route to be about 9-10 times more hazardous than the existing channel for navigation and has a higher probability for a contaminant spill (see the Final Screening section of the Main Report).

One suggestion for improving the safety of the open-bay route was to straighten the channel through the bays. The panel judged this would be a safer route, but would still be 5-6 times more hazardous than the existing channel. The straighter route would still be subject to strong cross currents, high winds, and poor visibility without the prominent land marks that exist in the present channel. Other panel members objected to this plan because of the much greater environmental damage caused by cutting new channels through oyster reefs and bird-nesting islands. It was agreed that this was not a viable alternative for environmental reasons.

2.6 CONCLUSION

Based on cost comparisons, environmental damages and benefits, and the results of the Delphi panel, Alternative 2, continuing use of the existing channel and adding bank erosion protection to prevent erosion of the critical habitat, is the recommended plan. A spill containment plan would also be developed to protect the marshes and birds in the area from potential cargo spills. As explained above, spills are easier to contain and clean up in the existing channel than in the open-bay route and will require less equipment. Therefore, the added costs for spill containment are lower for the existing channel and the potential habitat protection greater than in the open-bay alternative.

3.0 AFFECTED ENVIRONMENT

3.1 ENVIRONMENTAL CONDITIONS

3.1.1 Physiography

This portion of the GIWW lies within the Gulf Prairie and Marshes of the Gulf Coast Plains of Texas (Gould, 1975). Predominate features of the area include barrier islands and other features formed primarily by riverine and coastal processes beginning in the late Pleistocene and continuing to present. Such features include Matagorda Island, a barrier island; Blackjack and Lamar Peninsulas; San Antonio, Mesquite, Aransas, Copano, and other bays; the Guadalupe and Aransas Rivers; and numerous creeks. These features combine to form a complex ecological system.

3.1.2 Geology

The study area has been worked and reworked by wind, rivers, and the sea since early Cretaceous time (over 100 million years ago) as the land and sea rose and fell according to prevailing tectonic forces and the effects of the ice ages. During the Pleistocene (one million years ago), the great ice sheets did not reach the area, but they affected the land first by lowering the sea level which caused erosion and then by raising the sea level as they melted, flooding the area. Most of the surface sediment found in the study area today originated about 120,000 years ago during a period of deposition by the ancestors of modem rivers (Nueces, Aransas, Guadalupe, Lavaca, and Colorado). These fluvial deposits eventually coalesced into the Beaumont Clays farmed in the interior today (McAlister and McAlister, 1987).

In the inland areas, the fresh-brackish wetlands were created by the ancient rivers as they formed oxbows, levees, loops, lakes, and moved sediments about. The barrier islands, on the other hand, were formed by sea level oscillations and Gulf waves, longshore currents, and storms that reworked the submerged deltaic deposits. These forces winnowed out the coarser sands and pushed them into windrows along the shore where the winds dried the sand and piled it into long ridges parallel to the shore. As the last ice age ended about 18,000 years ago (Holocene), the sea rose and began filling in behind the old windrows and reshaped them as rivers added new sediments from melting glaciers in the area. Wind and waves continued to pile sand onto bars that would eventually (about 3,000 years ago) become the present barrier islands. As the glaciers

receded, the local rivers shrank to the present low-flow conditions, the climate became hotter and drier, and the bays and marshes saltier (McAlister and McAlister, 1987).

3.1.3 Hydrology

Hydrology of the bays in the study area is influenced by river flow, rainfall, tides, winds, and currents. Fresh water flows into the study area primarily from the Guadalupe and Aransas Rivers, but there are several small creeks in the area. The nearest sources of oceanic water are Pass Cavallo about 32 miles to the northeast and Aransas Pass about 24 miles to the southwest. There is a small, ephemeral pass between Matagorda and San Jose Islands directly across from the Refuge called Cedar Bayou, but it is closed off most of the time. Because the area is distant from any direct connections to the Gulf and has restricted circulation caused by several major oyster reefs that separate the small bays, normal tidal fluctuation is small, averaging less than 6 inches. Strong winds in the area are common and can push the tides up to 4 feet higher or lower than normal.

As a result of these restrictions, salinity in the bays and marshes in the area is generally less than 24 ppt, but it is dependent on river inflow to maintain the low level. During periods of drought, salinities have been recorded as high as 50 ppt and during floods, salinity can drop to less than 1 ppt.

3.1.4 Climate

The study area is located in the humid subtropical zone, one of three climatic regions along the Texas coast. Summers are warm to hot and humid and winters are mild. The mean annual temperature range is 47°F to 92°F. Two principal wind regimes dominate the area and include persistent, southeasterly winds occurring from March through November and strong, short-lived northerly winds from December through February.

The dominant air mass is maritime tropical in which sea breezes moderate afternoon heat and keeps maximum temperatures a few degrees cooler than areas farther inland. Violent thunderstorms are common throughout the spring, summer, and fall months, with the most severe occurring in the summer. Hurricanes and tropical storms occur during the summer and early fall months and may result in high winds, heavy rainfalls, and high storm surges. The average return frequencies of hurricanes along the Texas coast is about once each two and one-half years and about once each ten years for a particular location along the coast.

Although the average annual rainfall is about 36 inches, it can vary from 17 to 64 inches. Farther south of the coastal bend, precipitation drops rapidly and there may be a net deficit of moisture due to high evaporation rates.

The mild winters are characterized by Pacific or Canadian high pressure systems moving through the area. The systems, often called cold fronts or northers, cause rapid temperature drops and abnormally low tides as the wind forces the water from the surrounding bays into the Gulf of Mexico. Periods of freezing temperatures are infrequent and usually last no longer than 2-3 days.

3.1.5 Ecology

The ANWR and surrounding area lies on the Texas coastal bend, an area of transition between the wetter, cooler northern Coastal Prairie with more luxuriant vegetation and the drier, hotter southern Coastal Prairie with sparse vegetation and higher wind erosion. Because it is in a transition zone where many of the resident species live at the limits of their range and several complementary species have overlapping ranges, the area has a higher species diversity than either the northern or southern Coastal Prairie. Species diversity is further enhanced by the fact that the area lies in the central flyway, so it is also a temporary refuge for many migratory birds. Man has also influenced species diversity in the region by introducing exotic species and by altering the local ecology through widespread agriculture (cultivation, pesticides, herbicides) and bay modification (dredging and disposal, oil and gas exploration, shrimp trawling, erosion).

3.1.6 Air Quality and Noise

Under the Clean Air Act of 1977, the Environmental Protection Agency (EPA) and the Texas Natural Resource Conservation Commission (TNRCC) - Air Program office are responsible for determining whether each area of the State is meeting required primary and secondary air quality standards. Air quality data for the study area were provided by TNRCC. Since the study area is rural, consisting primarily of agriculture, ranching, and some oil and gas production, existing ambient air quality in the region is good. Diffusion conditions are excellent because persistent winds average 10-20 miles per hour, mostly from the southeast. The nearest air quality monitoring stations to the study area are located in Corpus Christi and Victoria (TNRCC Region 14). The Air Program office of TNRCC continuously monitors sulfur dioxide, ozone, and particulates in the air, and certain volatile organic compounds and carbon monoxide on an intermittent basis at Corpus Christi and ozone only at Victoria. Both stations are classified as reaching attainment (meets or exceeds the standards). Because there are no monitoring stations near the study area,

TNRCC considers the area as unclassifiable. However, there should be no air quality problems in the area since the closest industry is located at Point Comfort, about 24 miles to the northeast.

Data on ambient noise levels are not available for the study area. However, since there are no major highways, commercial or industrial development, or other sources of high noise levels in the study area, it may be assumed that normal background levels exist for a typical rural setting. Levels in such areas would be about 50 decibels (dB). Temporary increases in noise to about 60 dB would occur along the GIWW during the passage of some larger tows or other similar vessels. After their passage, noise levels would return to normal. Similar noise levels would be expected from vehicular traffic along the rural roads in the project area and some temporarily higher levels on State Highway 35 outside the critical habitat.

3.2 SIGNIFICANT RESOURCES

3.2.1 General

Resources of the study area may be determined significant based on institutional, public, or technical considerations and the likelihood of the resource to be affected by one or more of the alternative plans being evaluated. Institutional recognition is acknowledged in the form of laws, executive orders, rules and regulations, resolutions, directives, ordinances, policy statements, charters, and bylaws of the various Federal, State, and local government entities or private groups. As part of this recognition, Section 122 of the River and Harbor and Flood Control Act of 1970 (Public Law 91-611) directed that guidelines be promulgated for consideration of significant economic, social, and environmental effects of proposed water resources development. The "Economic and Environmental Principles and Guidelines for Water and Related Land Resources Implementation Studies," dated March 10, 1983, were developed to ensure proper and consistent evaluation of those resources in the formulation and evaluation of various projects. Public recognition of a significant resource would generally be expressed in the form of controversy, support, conflict, or opposition over modifying that resource as it relates to the proposed project. Technical recognition of a resource is typically based on scientific knowledge or judgement of the characteristics for that resource.

The significant resources were based on these criteria and the fact that the study area includes a national wildlife refuge and a State coastal preserve with a highly visible and widely recognized endangered species and many environmentally sensitive resources. Significant resources for this study are judged to include vegetation, wildlife, aquatic

organisms, threatened and endangered species, water and sediment quality, historic and socioeconomic resources, and hazardous, toxic, and radioactive wastes.

3.2.2 Vegetation

Since Blackjack Peninsula is part of a national refuge, it has been protected from human development (with the exception of some oil and gas wells) and agriculture, allowing its many biotic communities to develop naturally. It is because the area has so many different communities with their component habitats that there is such a rich diversity of plants and animals for visitors to view. However, the area is not always left alone. When European settlers first arrived in the area, they described an area of vast grasslands. The settlers soon changed the character of the land by controlling natural grass fires and overgrazing the land. This led to an invasion by brush and live oak. Now Refuge personnel must periodically burn sections of the Refuge to mimic naturally-occurring fires to maintain the original savannah-like conditions and provide an alternate food source (acorns) for the whooping cranes during periods of low food availability in the marshes. The following is a short description of the vegetative biotic communities found in the study area.

Lamar Peninsula, Blackjack Peninsula, and Welder Flats, which comprise the study area, are variously classified biogeographically as Gulf Prairies and Marshes vegetational area or Coastal Prairie Region. The land is generally low and flat with only four creeks of any consequence draining the two peninsulas. On Lamar Peninsula, there are Willow, Salt, and Cavasso Creeks that empty into St. Charles Bay. On Blackjack Peninsula, there is only Burgentine Creek which also empties into St. Charles Bay. Additionally, there are several manmade ditches and canals draining the extensive agricultural fields north of Blackjack Peninsula which empty into Burgentine Creek. These minor drainages transport sporadic, massive runoff from heavy rains and contain agricultural chemicals, such as herbicides, pesticides, and fertilizers. The major industry in the area is agriculture and ranching with some oil and gas drilling and production activity scattered throughout. The areas not under cultivation are generally managed for cattle grazing (outside the Refuge) or selective wildlife enhancement (inside the Refuge). Thus, the land is continually disturbed by overgrazing, clearing, mowing, or burning.

The ANWR and surrounding area can be subdivided into three vegetation zones and up to 12 plant communities based on soil type, salinity, elevation, and floral composition (taken from McAlister and McAlister, 1987).

Gulf Prairie - Clay to clay-loam soils, often quite saline and found in the Tatton Unit and Burgentine Lake area. Plant communities commonly found in this zone include from lowest to highest elevation: The tidal flat community (sea ox-eye daisy, glasswort, saltwort, seablight, saltgrass, smooth cordgrass, marshhay cordgrass, and Gulf cordgrass), cordgrass community (Gulf cordgrass, groundsel tree, and mesquite), upland grassland community (many species of bluestems, bristlegrass, and other grasses), mesquite-prickly pear community (mesquite, Texas prickly pear, goldenweed, nightshade, Texas gramma, and other grasses), and chaparral community (mesquite, lime prickly ash, spiny hackberry, Texas prickly pear, spanish dagger, and other xerophytic legumes and buckthorns).

Gulf Sands - Low to high salinity sands which make up almost all of Blackjack Peninsula and most of Lamar Peninsula. Plant communities in this zone include: The shell ridge community (live oak, yaupon, spanish buckeye, lime prickly ash, greenbriar, pepper-vine, tanglewood, torchwood, mesquite, spanish dagger, Texas prickly pear, grasses, Gulf and marshhay cordgrass, and groundsel tree), oak-bay forest community (laurel oak, red bay, live oak, farkleberry, blackjack oak, yaupon, beautyberry, and grasses), freshwater community (bladderwort, pondweeds, water milfoil, duckweed, bogmat, water lily, bulrushes and cattails, umbrella sedge, arrowleaf, buttonbush, rattlebush, sedges and rushes, black willow, and several grasses), ridge-and-swale community (live oak mottes and thickets, many species of grasses, goatweeds, marsh elder, ragweeds, sunflowers, asters, mints, thistles, legumes, and a wide variety of wildflowers), and tidal shore grassland community (marshhay and Gulf cordgrass, saltgrass, seashore paspalum, sumpweed, and bluestems).

Saltmarsh - These highly saline, permanently saturated sand to clay soils are found all around the margins of the bays and rarely exceed one foot in elevation. It is most extensive in the Welder Flats area. Plant communities are not well developed here due to high salinity, but may include: The tidal flat community, saltmarsh community (smooth cordgrass, black needle rush, and saltmarsh bulrush), brackish pool community (virtually denuded soils with only a few salt-tolerant plants of the tidal flat community), and chaparral community (on shell ridges and some disposal islands).

Of the 12 communities listed above, the ridge-and-swale community is the most extensive, covering about 50,000 acres on Lamar and Blackjack Peninsulas. Grasslands dominate this community and include over 100 species of grasses. However, since man has started modifying the ecology of the area, the grasslands have been gradually invaded by dense live oak thickets. The other plant communities in the area are much smaller and generally occur in scattered fragments interspersed throughout the grasslands. Welder Flats, however, is dominated by the brackish pool community and covers about 7,000

acres. This area is noted for its lack of vegetation, large areas of sand and mud flats, and an extensive system of interconnected shallow pools. The upland area north of the flats is generally coastal prairie and heavily grazed by cattle. It also has several producing oil and gas wells.

3.2.3 Wildlife Resources

Animals in the project area are equally as diverse as the plants. The area is well known for its popular and abundant game animals, such as white-tail deer, javelina, feral hog, turkey, quail, dove, and squirrel. Equally important to the ecosystem are the other animals found there in abundance, such as opossum, shrews, moles, bats, mice, rats, gopher, rabbits, armadillo, raccoon, skunk, and their predators such as coyote, fox, and bobcat.

The area is also well known for its diverse and abundant birds and is a favorite spot for amateur birdwatchers to gather, especially during the fall and spring migration periods. Over 350 species of birds have been identified in the area, such as the popular endangered whooping crane, prairie chicken, and brown pelican. There are also at least 15 species of ducks, 4 species of geese, and 9 species of rails in the area plus an abundance of other water fowl, such as grebe, loon, herons, egrets, ibis, storks, the beautiful roseate spoonbill, gulls, terns, and the graceful and agile black skimmer. Shorebirds are numerous along the beaches, marshes, and sand flats and include plovers, willet, avocet, sandpipers, sanderling, dowitcher, stilts, and curlews. Farther inland among the trees and the grasslands are the many different passerines, raptors and other birds. These include warblers, swifts, swallows, hummingbirds, woodpeckers, grackles, meadowlarks, wrens, sparrows, hawks, owls, falcons, osprey, eagles, and vultures to name only a few.

Less abundant in the area, but equally interesting, are the reptiles and amphibians, such as the formally threatened alligator, 8 species of turtles, 3 species of sea turtles, 9 species of lizards, and 32 species of snakes. Amphibians are not as diverse as reptiles in the area, but there are 3 species of salamanders, 8 species of frogs, and 6 species of toads.

3.2.4 Aquatic Resources

The project area lies within a complex system of bays, coves, islands, rivers, lakes, and passes to the Gulf of Mexico. There are five major bays and eight minor bays in the area. The largest are Copano, Aransas, St. Charles, San Antonio, and Espiritu Santo

Bays. The smallest are Carlos, Mesquite, Shoalwater, Hynes, Guadalupe, Mission, Sundown, and Ayers Bays. The bays are generally less than 8 feet deep and vary from turbid to clear, depending on wind and weather. Salinity also varies between bays depending on how many and how large the rivers and creeks are that empty into them. Regardless, all the bays can experience virtually freshwater conditions during floods to hypersaline conditions during droughts. Temperature also varies from freezing during the occasional "blue norther" to very hot during the baking summer months. Thus, the plants and animals inhabiting this ecosystem must be tolerant of extreme changes or be able to move out when conditions are intolerable. For this reason, diversity is higher when measured over a period of years compared to daily diversity. Environmental variability can also lead to mass mortality among sessile organisms, such as oysters, when conditions deteriorate beyond their limits.

Despite the occasional to frequent periods of high turbidity, most of the bays have a fringe of seagrasses along the shoreline that varies from 100 feet to 600 feet wide and a density of a few blades per square yard to several hundred or more. There are at least five species of seagrasses in the system, the most common being shoalgrass, followed by wigeongrass and turtlegrass. These grass beds along with the intertidal marshes fringing the bays are important as nursery areas for the many fish and invertebrates inhabiting the bays and also provide food and shelter for many juvenile organisms.

Oysters are abundant in many bays and are important to the ecosystem since they form a distinct habitat used by many marine organisms. Oysters also are a major component of the commercial fishery in the area, second only to the shrimp industry. Several major oyster reefs occur in the major bays, but there are other smaller, ephemeral reefs scattered throughout all the bays.

There are more than 60 common and abundant species of fish in the bays ranging from the small forage and bait fish, such as killifish, mullet, pinfish, pigfish, menhaden, anchovy, silversides, silver perch, silver jenny, shad, puffer, and sea catfish to the larger and recreationally important species, such as speckled trout, sand trout, redfish, black drum, southern flounder, sheepshead, croaker, and spot. In addition to the fish, there are many invertebrate species that form important links in the food chain, some of which are also commercially valuable (e.g., white shrimp, brown shrimp, and blue crab). Other invertebrates include fiddler crabs, mud shrimp, marine worms, clams, amphipods, and isopods. There are also many species of freshwater fish and invertebrates in the many fresh- to brackish-water ponds, lakes, creeks, and rivers in the area.

Because there is such a diverse assemblage of aquatic species in the area, especially at Welder Flats, about 1,400 acres of the approximately 1,700 acres that make up the subtidal wetlands of Welder Flats have been designated as a coastal preserve by TPWD and Texas General Land Office (TGLO) in 1988. These two State resource agencies have established a cooperative program to manage the sensitive and productive estuarine habitat in several estuarine areas along the Texas coast from South Bay near Port Isabel to Armand Bayou near Houston. Under the Coastal Preserve Program, State-owned submerged coastal lands controlled by TGLO are leased to TPWD to manage and protect the preserve's fish and wildlife resources. The Welder Flats Coastal Preserve was one of the first two areas selected (South Bay was the other), primarily because of its extremely high estuarine habitat quality and its increasing use as a wintering area by the endangered whooping crane. The emergent lands adjacent to the preserve are privately owned, but the landowner (the Cliburn Ranch) supports the preserve and works closely with the TPWD to protect the resources in the area.

3.2.5 Threatened and Endangered Species

The basis for conducting this feasibility study is primarily because a Federal project (the GIWW) is impacting (eroding) critical habitat protected under the ESA and indirectly impacts Federally-listed endangered species. Because there is a direct link between the ESA and an action to modify a Federal project and because there is insufficient time for a separate review of the BA due to the complexity of the plans, the BA that is normally sent as a separate report to the responsible Federal agencies for their review and opinion on the project impacts to endangered species is incorporated directly into this EIS. The EIS and internal threatened and endangered species section have been reviewed concurrently by the appropriate Federal agencies for accuracy in describing potential project impacts to endangered species and critical habitat via the Draft EIS. The agencies were asked for their concurrence on the USCE's opinion of no adverse impacts to threatened or endangered species or their listed critical habitat by the recommended armoring and 50-year disposal plans.

The USCE requested a list of threatened and endangered species protected under the ESA that might occur in the project area from the USFWS and the National Marine Fisheries Service (NMFS) on October 1, 1992. A similar list of species under State protection or concern was requested from the TPWD on October 30, 1992. Many of the State-listed species are not on the Federal list and have no legal status under the ESA. However, since these species are of special concern to the Texas Natural Heritage Program, they will be considered for potential project impacts. Species lists were received from the USFWS on February 10, 1993, the NMFS on October 9, 1992, and the TPWD on

January 12, 1993. Candidate species for Federal listing that are designated as C1, C2, or C3 and State-listed species not on the Federal list are not protected by the ESA.

Due to the delay in obtaining the necessary information on project alternatives and potential impacts to the protected species, an updated list of threatened and endangered species was requested from the USFWS and NMFS on February 25, 1994. In the interval between receiving the first species lists and completion of this assessment, there may have been additions to or deletions from the Federal list. Therefore, to ensure a complete assessment, updated lists were requested. The USFWS and NMFS provided replies on April 15, 1994 and April 19, 1994 (by telephone), respectively. There were no additions or deletions to the lists, but two candidate species for Federal listing had a change in status. The mountain plover was upgraded from C2 to C1 (data indicated a greater threat to their survival than previously realized) and the long-billed curlew was downgraded from C2 to C3 (survival no longer considered at risk). This assessment has reviewed the potential impacts to the species listed in Table 4. All correspondence is included in Appendix B.

A literature review and interviews with recognized wildlife experts were conducted to gather information on Federally-protected and candidate species that may be found in the project area. The following people were interviewed starting in March 1993:

Mr. Ted Eubanks, Piping Plover Recovery Team
Mr. Peter Jenny, Peregrine Fund (Vice President)
Mr. Tom Maechtle, Peregrine falcon researcher, Virginia Polytechnic Institute
Mr. Tom Stehn, Biologist, Aransas National Wildlife Refuge
Mr. Mike Lange, Biologist, Brazoria National Wildlife Refuge
Mr. Steve Labuda, Refuge Manager, Attwater Prairie Chicken NWR
Dr. Michael Tewes, Endangered cats authority, Texas A&M Univ at Kingsville

The USFWS and NMFS have reviewed this BA and have concurred with the USCE assessment of no significant adverse impact to any of the listed or candidate species. Their biological opinions are included in Appendix B, Section 2.

3.2.5.1 Whale Species

The NMFS lists five whale species that may be found off the Texas coast. Of these, the sperm whale, which is cosmopolitan and the only toothed whale on the endangered list, is probably the most common according to stranding records. However, this species apparently prefers deeper waters and only approach shorelines characterized by shelves

TABLE 4

LIST OF THREATENED AND ENDANGERED SPECIES

Common Name	Scientific Name	Status* (Fed)	(St)
Fin whale	Balaenoptera physalus	E	
Humpback whale	Megaptera novaeangliae	E	
Right whale	Eubalaena glacialis	E	
Sei whale	Balaenoptera borealis	E	
Sperm whale	Physeter macrocephalus	E	
Green sea turtle	Chelonia mydas	T	
Hawksbill sea turtle	Eretmochelys imbricata	E	
Kemp's ridley sea turtle	Lepidochelys kempi	E	E
Leatherback sea turtle	Dermochelys coriacea	E	
Loggerhead sea turtle	Caretta caretta	T	
Whooping crane	Grus americana	E	E
American peregrine falcon	Falco peregrinus anatum	E	
Arctic peregrine falcon	Falco peregrinus tundrius	T	
Attwater's greater prairie chicken	Tympanuchus cupido attwateri	E	E
Bald eagle	Haliaeetus leucocephalus	E	
Brown pelican	Pelecanus occidentalis	E	E
Piping plover	Charadrius melodus	T	T
Jaguarundi	Felis yagouaroundi	E	
Ocelot	Felis pardalis	E	
Black lace cactus	Echinocereus reichenbachii var. albertii	E	
Gulf coast hog-nosed skunk	Conepatus leuconotus texensis	C1	
Aransas short-tailed shrew	Blarina hylophaga plumbea	C2	
Black-spotted newt	Notophthalmus meridionalis	C2	
Rio Grande lesser siren	Siren intermedia texana	C2	
Gulf salt marsh snake	Nerodia clarki	C2	
Texas diamondback terrapin	Malaclemys terrapin littoralis	C2	
Cagle's map turtle	Graptemys caglei	C2	
Texas horned lizard	Phrynosoma comutum	C2	
Audubon's oriole	Icterus graduacauda audubonii	C2	
Ferruginous hawk	Buteo regalis	C2	
Northern gray hawk	Buteo nitidus	C2	
Loggerhead shrike	Lanius ludovicianus	C2	
Texas Botteri's sparrow	Aimophila botterii texana	C2	
Texas olive sparrow	Arremonops rufivirgatus rufivirgatus	C2	
Reddish egret	Egretta rufescens	C2	T
White-faced ibis	Plegadis chihi	C2	
Long-billed curlew	Numenius americanus	C3	
Western snowy plover	Charadrius alexandrinus nivosus	C2	
Mountain plover	Charadrius montanus	C1	
Rough-seed sea purslane	Sesuvium trianthemoides	C2	
Texas windmill grass	Chloris texensis	C2	
Welder spiny aster	Machaeranthera heterocarpa	C2	
Threeflower broomweed	Thurovia triflora		U

* (Fed) = Federally-listed species
(ST) = State-listed species
E = Endangered species
T = Threatened species
C1 = Category 1; species for which there is enough evidence of vulnerability to support listing proposals, but listing has been delayed for priority reasons.
C2 = Category 2; species for which there is some evidence of vulnerability, but for which there is not enough data to support listing proposals.
C3 = Category 3; species once considered for listing, but have been removed.
U = Unlisted species tracked by the Texas Natural Heritage Program.

that drop off rapidly (Schmidly and Shane, 1978). Congregations of these whales have been reported off the shelf edge near the Mississippi River Delta (MMS, 1993). The Texas coastline is characterized by broad shallow shelves and is not suitable habitat for these whales. The other four whale species are probably less common in Texas waters since they have had fewer recorded strandings. The right whale is the rarest of the world's large whales. The North Atlantic population seasonally migrates along the Atlantic coast of the U.S., but there is just one stranding record for the right whale in Texas in 1974. The fin whale is cosmopolitan, but there may be a small population inhabiting the Gulf of Mexico and Caribbean Sea. Sightings are typically in the deeper waters of the north-central Gulf. The sei whale is also cosmopolitan and may have a resident population in the Gulf. The humpback whale occurs in all oceans and seasonally migrates from the summer polar feeding grounds to the warmer winter calving grounds over shallow tropical shelves. Sightings in the Gulf have been sporadic (MMS, 1993).

3.2.5.2 Sea Turtles

The five species of sea turtles found in the Gulf of Mexico are all listed as threatened or endangered because of population declines resulting from over-exploitation by man, increasing development of beaches and coastal islands (nesting sites), incidental capture by commercial trawling, and litter on the open sea which harms turtles when eaten (Bustard, 1973; Ernst and Barbour, 1973; Hildebrand, 1980; Rabalais and Rabalais, 1980; USFWS, 1980 a-d; Nelson, 1986).

All five sea turtle species have been reported along the Texas Coast, but the hawksbill and leatherback are the least common sea turtles in the western Gulf of Mexico. The hawksbill frequents rocky areas and coral reefs, but also enters shallow bays and estuaries to feed on invertebrates (Ernst and Barbour, 1973; Hildebrand, 1980; Rabalais and Rabalais, 1980; USFWS, 1980c). The leatherback is the most oceanic of all the sea turtles and seldom enters coastal bays and estuaries (Ernst and Barbour, 1973).

The Kemp's ridley and green sea turtle frequently enter coastal bays and estuaries to feed. The loggerhead, on the other hand, frequents offshore oil platforms, rock reefs, and other obstructions as adults (Hildebrand, 1980; Rabalais and Rabalais, 1980), but juveniles are more apt to enter bays and estuaries to feed (Nelson, 1986). The green sea turtle is primarily herbivorous and prefers clear, shallow waters with abundant sea grass and algal beds to feed in (Bustard, 1973; Ernst and Barbour, 1973; USFWS, 1980b). This habitat is most common along the lower Texas coast and decreases toward the upper coast where waters are too turbid to allow growth of seagrass. The Kemp's ridley is probably the most common sea turtle on the Texas coast where it migrates between its two

major feeding areas: The white shrimp-portunid crab grounds off Louisiana and the Tabasco-Campeche area of Mexico (Hildebrand, 1980). It is also considered the most endangered sea turtle in the Gulf of Mexico, since the adult breeding population is confined to the Gulf where only one major nesting site now exists on a beach north of Tampico, Mexico. Efforts are now underway to increase population levels by hatchery rearing young turtles for later release and to establish another nesting site in the Gulf of Mexico on Padre Island (USFWS, 1980d).

3.2.5.3 Whooping Crane

With the possible exception of the bald eagle, the whooping crane is probably the best known and most easily recognizable of the endangered species today for most people and may be considered the flagship for all endangered species. Concern over the loss of some of this species' best winter feeding grounds and its effect on the health and survival of the birds is the primary reason for conducting this feasibility study. This concern is heightened because the flock that winters at ANWR from October 15 to April 15 (as a general rule) is the last remnant population of a widespread species, except for a small, unsuccessful experimental flock (now discontinued) at Grays Lake National Wildlife Refuge, Idaho and a new experimental flock in Florida. See Section 1.3.2 for a brief history of whooping crane distribution and management that demonstrates the vulnerability, slow recovery potential, and fragile survival probability of the species. The information was taken mostly from the 1986 Recovery Plan (USFWS, 1986a), the USFWS Final Rule for establishing an experimental population in Florida (Federal Register, 1993a), and the revised 1994 Recovery Plan (USFWS, 1994).

The USFWS and other members of the whooping crane recovery team are concerned about the vulnerability of the last remaining wild flock to catastrophic events that could destroy them. In order to increase their chances for survival, the recovery team wants to establish at least two experimental wild flocks. The first experimental wild flock at Grays Lake, Idaho was discontinued, but a new nonmigratory experimental flock is presently being established in Central Florida to help the population expand. As a result of these efforts, there were 133 adult and 25 juvenile birds in the ANWR flock, 4 at the experimental colony at Grays Lake, 24 in the experimental colony in Central Florida, and 146 in captivity in August 1995, bringing the total number of surviving whooping cranes in the world to 332 birds.

Whether or not the small experimental flocks prove to be successful, the survival of the species is ultimately dependent on the survival of the remaining wild population at Aransas. One of the major problems that could affect the crane's survival at the ANWR

is the loss of prime feeding habitat through wind and navigation traffic-induced wave erosion. This is an especially sensitive issue because of the crane's strong fidelity to home territory. Almost without exception, even though there are thousands of acres of apparently prime marsh habitat available a short flight away, newly paired adults will attempt to establish a territory adjacent to the area where one of the pair (usually the male) spent its first winter as a chick. Subadults and, for some unknown reason, an occasional young pair do not defend a territory, but tend to wander over a larger area usually centered around their parents winter territory. As a result of continued crowding into the historic home range on Blackjack Peninsula (especially around Sundown Bay), territory size has declined from an average of about 435 acres in 1971-72 (10 territories) to about 289 acres in 1982-83 (14 territories) when territorial sizes were last estimated (Stehn and Johnson, 1987). In 1992-93, there were 20 territories crowded into the same area, indicating a further decline in size for the territories.

Only recently have pioneering cranes established territories in new areas. Although cranes have visited the marshes on Lamar Peninsula and Welder Flats before, the first territories were not established at these sites until 1971-72 and 1973-74, respectively. Because Lamar Peninsula, Welder Flats, and San Jose and Matagorda Islands have the lowest crane densities, territories in these areas average a much larger 1,052 acres in size (Stehn and Johnson, 1987). The approximate location of each of the 50 known winter territories for 1992-93 are shown in Figure 7. The territories are shown as non-overlapping sites to show the minimum area defended by adult pairs. However, territories usually overlap and a crane pair may utilize (poach on) nearby sections of a neighboring pair's territory if their neighbors are located at the far end of their property. These forays become more frequent and extensive during migration periods if the neighboring pair has not arrived at or has already left the ANWR (Stehn and Johnson, 1987).

A pioneering capability becomes more critical as the flock expands, because as more young birds crowd into the older bird's established territories, stress associated with crowding (intraspecific rivalries) and the reduced amount of food available for each bird (on a per acre basis) increases. The USFWS cannot predict the minimum territorial size needed by crane pairs and does not understand the pioneering process, how to induce it, and cannot predict future pioneering frequency (Tom Stehn, pers. comm.).

Other potential impacts to crane survival include the threat of a barge collision and contaminant spill in the GIWW where it crosses whooping crane Critical Habitat which is discussed in Section 4.2.3 and future surface water developments of the Guadalupe drainage system which will reduce freshwater inflow to San Antonio Bay. Reduction in

freshwater inflow can potentially affect the crane's food supply and survival. This issue is discussed in Section 4.2.13.

3.2.5.4 Peregrine Falcon

The two subspecies of peregrine falcon listed as occurring in the project area are discussed as a single group because of the difficulty in distinguishing the groups. It is impossible to distinguish individual migrating birds as American or Arctic subspecies based on physical characters because of the broad overlap of characters (clinal gradations). The subspecies are designated primarily on geographical limits of the breeding grounds rather than differing physical characters (Federal Register, 1983) and attempts at identifying genetic differences by gel electrophoresis have been unsuccessful so far (Tom Maechtle, pers. comm.).

Three subspecies of peregrine falcon have been described for North America, but the Peale's subspecies (Falco peregrinus pealei) is the most sedentary of the three subspecies and nests only in the Pacific northwest and Aleutian Islands (USFWS, 1984a). The American peregrine falcon (F.p. anatum) nests in the boreal forest region (taiga) in central Alaska and northern Canada, south throughout western Canada and the U.S. (including west Texas) to Baja California and the highlands of central Mexico (USFWS, 1982a). The American subspecies once nested in the eastern U.S., but these populations were extirpated by the 1960's (Federal Register, 1983). The falcons are currently being reintroduced to the eastern U.S., but they have been taken from parents of various subspecies origins, including European populations (USFWS, 1991). The Arctic peregrine falcon (F.p. tundrius) nests in the Arctic (tundra) regions of Alaska, Canada, and Greenland and is the most migratory of the subspecies.

The American and Arctic subspecies were listed as endangered in 1970 after a precipitous population decline started in the 1950's. The primary cause for the decline was identified in the 1960's as nesting failure related to high levels of the insecticide DDT and its derivative DDE, which caused egg-shell thinning and early breakage (Federal Register, 1983; USFWS, 1984a). Only minor losses were attributed to habitat loss, depredation for falconry purposes, accidents, shooting, or poisoning. With the ban on DDT in 1972, the populations have recovered sufficiently for the USFWS to downgrade the Arctic subspecies to a threatened status. The American subspecies has not recovered sufficiently to support a downgrade in its listing. The Peale's falcon, because of its non-migratory habit and remote location, was not affected by DDT and was never endangered or listed.

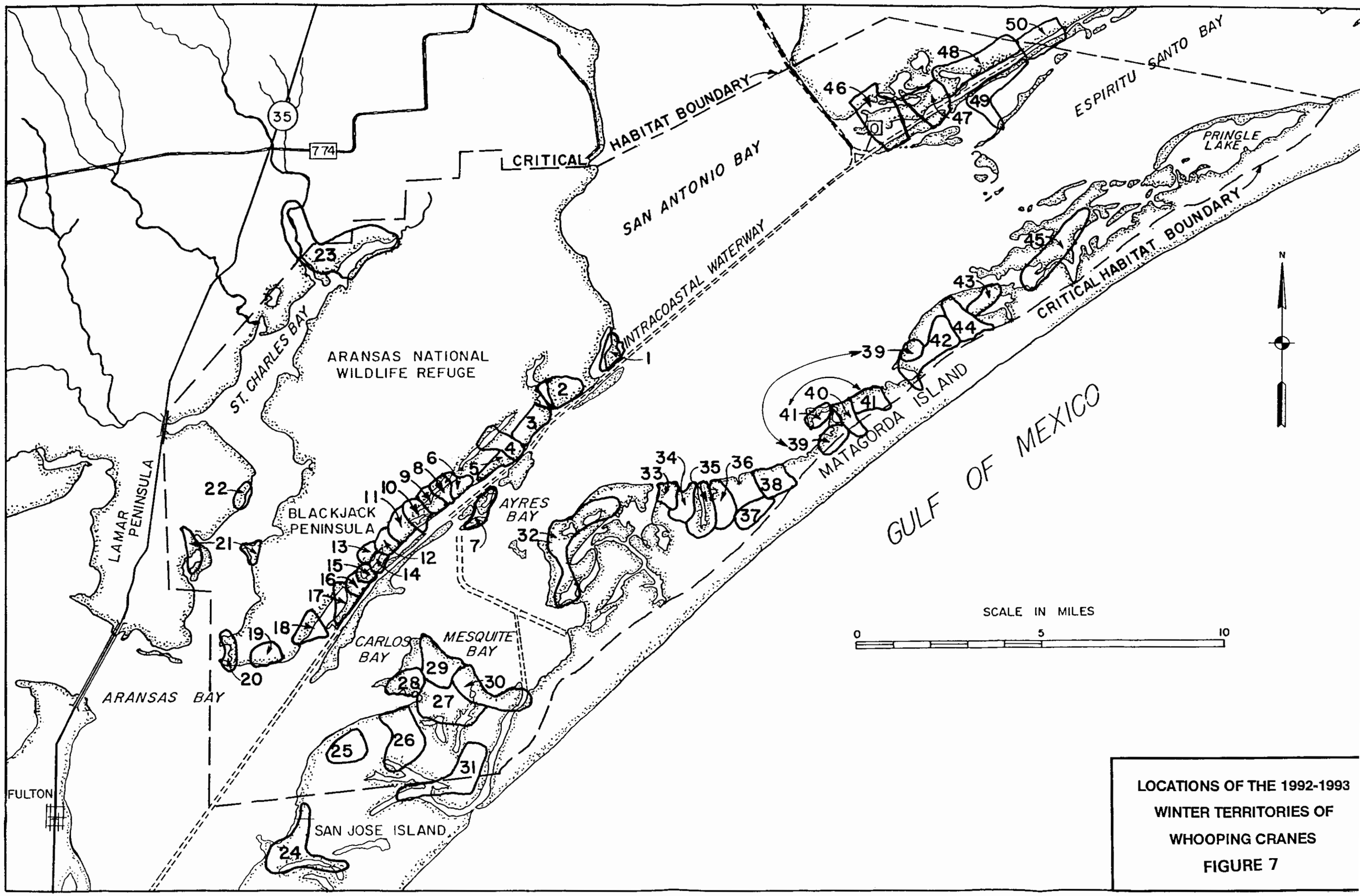

LOCATIONS OF THE 1992-1993 WINTER TERRITORIES OF WHOOPING CRANES

FIGURE 7

The peregrine falcons which migrate along the Texas coast in fall (September to October) and spring (April to May) are mostly the Arctic subspecies (based on captured tagged birds), with only a few American subspecies included (Tom Maechtle, pers. comm.). They tend to concentrate along south Texas beaches and estuaries where they hunt their prey (waterfowl, shorebirds, and passerine birds) over the large expanse of tidal flats which offer little or no refuge and where there is little vehicular traffic to disturb them (Belardo, et al., 1978; Hunt, et al., 1979; USFWS, 1980f). Apparently, they avoid crossing large bodies of water which forces them to funnel along the Texas coast, particularly during their spring northward migration (Hunt et al., 1979). Recent data also indicate the south Texas coast (North and South Padre Islands) with its large areas of tidal flats is a crucial staging area (Riddle, 1982), and may be the only known spring staging area for peregrines (Maechtle, 1987). Individuals hunt and rest in the south Texas area an average of 10 days, but may stay as long as 28 days (Hunt, et al., 1979; Maechtle, 1987).

3.2.5.5 Attwater's Greater Prairie Chicken

Before rice farming started in the Gulf coastal prairie in the late 1800's, an estimated 1,000,000 of this chicken-sized endangered species occupied about 7,000,000 acres from southwestern Louisiana near Abbeyville to the Nueces River on the Texas coast (Jurries, 1979; Federal Register, 1992; USFWS, 1992). It was a popular game bird (mostly for sport rather than meat) of the late 1800's and early 1900's. Before (and even after) game laws were first established in Texas in 1883, the birds were often killed and thrown in huge piles to rot during week-long hunts. By 1937, the species had declined to only 8,700 birds, leading the Texas Legislature to close the hunting season (Jurries, 1979).

Although hunting may have caused some local population declines, loss of habitat due to agricultural, urban, and industrial expansion, invasion of prairie habitat by woody species (caused by fire suppression and overgrazing), and increased cattle production and occasional to frequent overgrazing, especially during drought conditions, was the primary reason for overall population declines (Jurries, 1979; Federal Register, 1992; USFWS, 1992). Minor contributions to the decline included competition with other species (geese in winter) and invasions of fire ants and feral domestic cats and dogs. Serious declines began in the early 1900's and the species disappeared from Louisiana about 1919 and was extirpated east of the Trinity River by 1960. Because of concerns about the prairie chicken's future, the species received its initial Federal protection in 1967 under the Endangered Species Preservation Act of 1966 and is currently designated as endangered under the Endangered Species Act of 1973, as amended, which superseded the 1966 Act (USFWS, 1992).

Even with Federal protection, declines continued so that by 1980, the population estimate for the prairie chicken was only 1,632 birds with further declines to about 926 birds by 1988. A severe drought in 1989, coupled with severe overgrazing which eliminated cover for nesting and protection from predators, reduced the population to its lowest recorded level of about 432 birds (TPWD, 1992). Since then, population counts have dropped even further so that by spring 1994, there were only about 158 birds remaining in four populations in the wild in Texas (Austin, Colorado, Galveston, and Refugio Counties). The largest population resides on the O'Connor Ranch located in Aransas, Goliad, and Refugio Counties just north of the ANWR. The latest drop in the population count was caused by excessive rainfall during the bird's peak hatching and brooding period in 1993 (TOES, 1994)

To help propagate and protect the species and reverse its decline, the Attwater Prairie Chicken National Wildlife Refuge was established in Colorado County in 1972. The USFWS also established a captive flock at Fossil Rim Wildlife Center near Glen Rose, Texas to study propagation techniques and later release the birds into the wild at two proposed sites: one at Hoskins Mound (part of the Brazoria National Wildlife Refuge) located between Freeport and Galveston and the other in Victoria County (Steve Labuda, pers. comm.).

Optimum prairie chicken habitat consists of an interspersion of short-, mid-, and tallgrass prairie with use of each habitat depending on season and activity. Shortgrass habitat (less than 10 inches) is used for courtship (bare areas where males display are used year after year and called leks or booming grounds), feeding (mostly green foliage of native forbs followed in importance by seeds and insects), and to avoid water after a heavy dew or rain. Midgrass heights (10-16 inches) are used for roosting and feeding, and tallgrass habitat (16-24 inches) is used for shade in hot weather, shelter from inclement weather and predators, and feeding in the fall. Very tallgrass (more than 24 inches) and grass habitat with over 25 percent trees or brush is usually avoided (USFWS, 1992).

3.2.5.6 Bald Eagle

The bald eagle is the only member of the fish or sea eagle group found in North America and is the only eagle whose distribution is restricted to North America (Snow, 1973; Dugoni, 1980). Two subspecies or races of bald eagle are described based on size and weight: Haliaeetus leucocephalus leucocephalus, the southern bald eagle and Haliaeetus leucocephalus alascanus, the northern bald eagle (Snow, 1973; Dugoni, 1980; Murphy, et al., 1984). However, these differences are of questionable merit since there is a continuous gradient of increasing size (or clinal variation) from south to north (Murphy,

et al., 1984). As with most birds of prey, the female is larger than the male and does most of the brooding and care of the young, while the male does the hunting (Snow, 1973).

Southern bald eagles reach adulthood at 4-6 years of age (Simons, et al., 1988), but may breed with an adult bird as early as 3 years (Dugoni, 1980). They nest in the fall to spring period (the opposite of the northern race), presumably because food is easier to obtain then and young will have a chance to develop feathers as protection against hot summer weather. Paired eagles return to their nest in September - October, lay eggs in November - December (usually 1-2 eggs), hatch them in January - February, and the young fledge during April - May. Nest site selection apparently is based on several physical factors, such as relative tree height, tree condition, stand heterogeneity, unobstructed view, and proximity to a dependable and readily available food source (Dugoni, 1980). Nests are often in the forest fringe next to marsh or open water, and usually are constructed in dominant pines, baldcypress, or oaks within 1.8 miles of open water (McEwan and Hirth, 1979).

Quite often, a pair of eagles will construct more than one nest in an area, and Dugoni (1980) considered 20 percent of the Louisiana nests as alternate nests. Alternate nests may be 100- 800 yards from the primary nest (Isley, 1983; Dugoni, 1980), and the eagles may use them in different years or the alternate nests may go unused for several consecutive years (Dugoni, 1980; Murphy, et al., 1984). Thus, a nest is relatively inconsequential to a given pair of eagles. It is the nest site that originally attracted the pair that is of critical importance (Murphy, et al., 1984). This importance is aggravated by the fact that eagles are philopatric, which means they form an attachment to the place where they are raised and tend to return to that location when they are ready to breed. The irony of this strong fidelity is that it makes wild birds unlikely to recolonize vacant habitats (Dugoni, 1980; Murphy, et al., 1984; Simon, et al., 1988).

During the non-breeding season, the southern bald eagle migrates north, but its migratory movements are generally shorter than the northern race (Simon, et al., 1988). However, even this tendency is variable, because tagging studies by the TPWD have shown that some Texas eagles migrate as far north as Ontario and Manitoba, Canada while other birds tend to stay in Texas (Mabie, 1988a).

Bald eagle populations have declined since Europeans first colonized the North American continent. The primary reason at first was human encroachment, consisting primarily of disturbance, habitat destruction, and shooting. Then, starting in the 1950's, increased use of long-lived pesticides (DDT and its derivatives) greatly accelerated the eagle's decline by reducing reproductive success through eggshell thinning and embryo

mortality (Murphy, et al., 1984, and references therein). Since the banning of DDT in 1972, southern bald eagle populations have shown signs of recovery, but are now confined mostly to disjunct breeding centers in Florida, Louisiana, South Carolina, and Texas (Murphy, et al., 1984).

The greatest threats to bald eagles in the southeast today are still disturbance and destruction of habitat due to the rapid increase in the human population in the region, especially in the more desirable waterfront locations, and mortality caused directly and indirectly by shooting. During a 21-year period (1961-1981), 25 percent of the documented eagle mortality was the result of shooting. Of greater concern now, however, is a growing body of evidence that lead poisoning may be a significant source of mortality (about 7 percent) since eagles will prey upon waterfowl crippled by lead shot (Murphy, et al., 1984).

Disturbance around nests, especially during the egg-laying period, has been shown to cause nest failure, but others have found no evidence of human activity disrupting reproductive success (Dugoni, 1980). It appears that eagles vary widely in their response to disturbance, with nest location capable of changing behavior and human tolerance to some degree. Eagles on nests near human habitation were more tolerant of human presence (Snow, 1973; Dugoni, 1980; Murphy, et al., 1984).

Habitat destruction is most noticeable when seen on a large scale, as sometimes happens in various State and Federal projects, such as water control, flood control, and navigation projects. While some of these projects do remove optimum eagle habitat (nest sites), other projects, such as manmade reservoirs, have created a significant amount of new eagle nesting habitat (Murphy, et al., 1984). Isley (1983) and Watkins (1989) report eagles nesting in flooded timber of new reservoirs for the first time in Oklahoma and Kansas, respectively. Smith (1981) reported the first sighting of eagle nests in inland areas of Texas (over 50 miles from the coast) since the pesticide era. The nest was located near a reservoir and may be a new trend for nesting eagles to occupy the extensive surface water systems of east Texas. Presently, this niche is most heavily used by wintering northern bald eagles (Murphy, et al., 1984).

3.2.5.7 Brown Pelican

The historic distribution of the eastern brown pelican was the coastal U.S. from North Carolina to Florida, west along the Gulf of Mexico to Texas, and the Caribbean region to Central and South America. During the 1920's, the once abundant U.S. population underwent a precipitous decline, especially along the Gulf coast. The breeding population numbered at least 5,000 pairs in Texas prior to 1920, but then reached a low

of less than 14 pairs by 1963 (USFWS, 1982b; TPWD, 1984). The decline was not gradual, but apparently came in two stages. The first decline occurred in the 1920's and 1930's and was probably due to direct human interference (King, et al., 1977; TPWD, 1984). The second, more disastrous, decline occurred in the mid-1950's to early 1960's. This decline at first was attributed to adverse weather conditions and disease (King, et al., 1977), but was later directly linked to pesticide poisoning, particularly endrin (King, et al., 1977; Schreiber, 1980; USFWS, 1980e, 1985). Endrin is a chlorinated hydrocarbon that not only contributed directly to mortality in pelicans of all age classes, but is responsible for egg-shell thinning and lower egg production which leads to reproductive failure.

Since the 1970's, use of chlorinated hydrocarbons for pest control has declined and the eastern brown pelican has slowly recovered and spread through its original range. By 1985, pelican recovery was sufficient to allow the USFWS to delist the species along the U.S. Atlantic coast and in Florida and Alabama on the Gulf coast. However, the species is still listed as endangered in the remainder of its range, and along the Texas coast it is abundant only from Matagorda Bay and to the south where most colonial nesting takes place on islands in San Antonio Bay, Corpus Christi Bay, and Aransas Bay (TPWD, 1984). Its population continues to expand with reports of attempted nesting as far north as West Galveston Bay. The primary factor now affecting pelican recovery is loss of nesting habitat (remote islands) and human disturbance.

In the project area, there are about 18 historic and currently used colonial waterbird nesting sites with at least 10 nesting pairs of waterbirds between Matagorda and Aransas Bays. Only six of these are considered major nesting sites (100 - 1000 pairs) and only two of the largest (Second Chain of Islands and Long Reef-Deadman's Islands) have recorded any nesting pelicans since 1973. For unknown reasons, these two sites appear to have been abandoned by pelicans since 1979 (Long Reef-Deadman's Islands - 17 nesting pairs) and 1989 (Second Chain of Islands - 10 nesting pairs), and they have not returned to the area for nesting by 1992, the latest census count available (nor have Refuge biologists seen any nesting activity by 1994). The closest major pelican nesting sites to the project currently are at Brown Pelican Island in Corpus Christi Bay (600 nesting pairs in 1992) and Sundown Island in Matagorda Bay (100 nesting pairs in 1990, the last census available for the site), both about 23 miles from the project (Texas Colonial Waterbird Society, 1992).

3.2.5.8 Piping Plover

This small migratory shorebird is endemic to North America and occurs in three disjunct breeding populations (Nicholls and Baldassarre, 1990a,b; Melvin, et al., 1991). The largest breeding population is found along prairie rivers and alkali wetlands of the

northern Great Plains (1,112 pairs), followed by a population on Atlantic coastal beaches from Newfoundland to South Carolina (961 pairs), and a very small group (17 breeding pairs) on sandy beaches of the Great Lakes shorelines (USFWS, 1988; Melvin, et al., 1991). The birds breed and raise their young from May to July and then return to their wintering grounds along the Atlantic coast from North Carolina to Florida, the Gulf of Mexico, and a very few in the Bahamas and Greater Antilles (USFWS, 1984b, 1988). Very little is known about their migration routes (Haig and Plissner, 1993), but they appear to make the flight nonstop (USFWS, 1988; Haig and Oring, 1988; Haig, 1992). The birds arrive on Texas beaches in mid-July and remain until late April (Haig, 1992).

The 1991 International Piping Plover Census accounted for 63 percent of the breeding population on the wintering grounds and found the majority of the birds (55 percent) in Texas (Haig and Plissner, 1993). Band returns indicate most of the Great Plains and Great Lakes birds winter along the Gulf of Mexico and the Atlantic birds migrate south along the Atlantic coast (Haig and Oring, 1988; USFWS, 1988). However, some crossover of the inland and Atlantic coast population does occur. Although these populations tend to segregate on their breeding and wintering grounds, electrophoretic analysis of blood samples did not indicate any quantifiable genetic differences between the breeding populations (USFWS, 1988).

Little is known about winter habitat requirements and the degree of fidelity to and size of established territories, but it appears that once some juvenile piping plovers establish a winter territory during their first year, they will continue to return to the same site thereafter (Ted Eubanks, pers. comm.). From recent studies, it appears that different habitat variables may affect plover presence depending on the coast (Nicholls and Baldassarre, 1990b). During several geographically limited studies, the birds were found foraging on sandflats adjacent to passes and inlets, on mudflats near sandy beaches, on overwash sandy mudflats, and on the foreshore of open beaches (Haig and Oring, 1985; Nicholls and Baldassarre, 1990a,b). Although the birds appear to use a great many nonvegetated coastal habitats, other studies have shown that several factors, especially tidal height, greatly influence the bird's location. As the tides change, the birds will change locations to feed on sand/mudflats on a low tide or rest on a beach at high tide (Nicholls and Baldassarre, 1990b). Therefore, the different habitats appear to serve different functional roles with sandflats and mudflats used for feeding and beaches used for resting (Johnson and Baldassarre, 1988). The largest coordinated survey of the U.S. coastline for a single day, the 1991 International Piping Plover Census, found 51 percent of the birds on ocean beaches, 43 percent on sand or algal flats in protected bays, and 6 percent on coastal inlets (Haig and Plissner, 1993).

Piping plover usually occur in small groups and are distributed unevenly along the coastline with at least half the seemingly ideal sites devoid of any of the birds (Nicholls and Baldassarre, 1990a; Haig and Plissner, 1993). Sites with the largest concentrations generally consist of expansive sandflats or sandy mudflats with sandy beaches in close proximity. These ideal habitats are most abundant along the south Texas shoreline, and the 1991 census found the highest concentration of the birds on either coast on Mustang Island (281 birds, 8.1 percent of census), Port Mansfield Pass (247 birds, 7.1 percent of census), and San Jose Island (210 birds, 6 percent of census) in Texas (Haig and Plissner, 1993).

These once common shorebirds suffered their first major decline at the turn of the century from unregulated hunting (Johnson and Baldassarre, 1988; USFWS, 1988). The latest threats (since 1945), however, have been attributed mostly to human disturbance (including recreational vehicles and pets), destruction of beach habitat for commercial and residential development, and concomitant destruction of adjacent sandflats through dune stabilization. In the nesting areas, the birds have a highly variable reproductive success because the sites are susceptible to frequent nest destruction through predation, reservoir construction, channelization of rivers, sand and gravel mining, and water level regulation policies that frequently flood nest sites (Haig, 1987, 1992; Johnson and Baldassarre, 1988; USFWS, 1988; Melvin, et al., 1991; Haig and Plissner, 1993). The USFWS has estimated that between about 1965 and 1985, an estimated 30 percent of the wintering habitat was lost in Texas (Federal Register, 1985). This is particularly critical for these birds because of their strong territorial fidelity. Once a site is lost, it is thought the birds are lost also and the loss of one or two pairs here and there in a small population pose, in the aggregate, the principal threat to the species' continued existence (Federal Register, 1984). As a result of these declines, the plovers were listed as endangered in the Great Lakes breeding area and threatened throughout the remainder of their breeding, migration, and wintering grounds in January 1986 (USFWS, 1988). The latest census, a 1992 survey on the breeding grounds, found a total of about 4,216 adults still existing (Ted Eubanks, pers. comm.).

Researchers studying population numbers and models have become concerned because one result of the very low numbers in the Great Lakes population is that a gap between the Atlantic coast and Great Plains populations could isolate these two populations creating a lack of genetic variability (Haig and Oring, 1985). Although a lack of variability has already been demonstrated for some local populations, the coefficients of inbreeding are not yet significant (USFWS, 1988). However, recent population model projections predict extirpation of the Great Plains population within about 80 years without implementation of recovery measures (Ryan, et al., 1993). Ryan (MS) further predicts that

as little as a 5 percent increase in the piping plover's annual rate of adult mortality would increase the present rate of population decline (now at 7.5 percent) by 38 percent.

Some suitable wintering habitat for the piping plover exists in the project area, and the birds have been recorded at several nearby sites. However, very little is known about the plover's distribution and use of the entire area. Most of the birds and known gathering sites are located on the sand/mud flats on the bay side of Matagorda and San Jose Islands and along the Third Chain of Islands, Ayres Reef, and Second Chain of Islands, all located in Carlos, Mesquite, Ayres, and San Antonio Bays. The closest documented birds to the GIWW are a few small populations found on bare sandflats near upland areas on Blackjack and Dunham Points, at the edge of a saltmarsh behind Sundown Bay, on two beaches next to the mainland side of the GIWW between Rattlesnake and False Live Oak Islands, and on a beach near Dagger Point in San Antonio Bay (Tom Stehn, pers. comm.).

3.2.5.9 Jaguarundi and Ocelot

These small, mostly nocturnal, neotropical cats are considered together because of their similarity of distribution and habitat requirements. The ocelot appears to be the most abundant and widespread of the two cats, especially in the U.S. Although much remains to be learned about the life history, population dynamics, habitat requirements, natural history, and management of both species, the jaguarundi is the most secretive and least known of the cats.

Distribution data for these cats is sporadic, but fossil evidence suggests the ocelot once ranged north through east and central Texas as far north as southwestern Arkansas, west to Arizona, and eastward to Florida. In recent times, however, the U.S. population has been reduced to two small remnant populations in south Texas and an occasional visitor in Arizona from Mexico. The bulk of the population is found in South America down to northern Argentina (Tewes and Schmidly, 1987; USFWS, 1990). There is very little prehistoric evidence for jaguarundi distribution, but recent data show the species occurring in southeastern Arizona and extreme south Texas. There have been many reported sightings of jaguarundi in central and east Texas, but these sightings are unverified and may be erroneous identifications of black feral house cats or similar-size animals (Tewes and Everett, 1986; Tewes and Schmidly, 1987). As with the ocelot, the jaguarundi is found primarily in Central and South America.

Both cats can be found in a variety of habitats over their range, including humid tropical and subtropical forests, swampy savannahs, coastal mangroves, and semi-arid thornscrub. In south Texas, their preferred habitat is an almost impenetrable thorny

chaparral thicket consisting primarily of mesquite, Acacia, Condalia, Castella, granjeno, cenizo, and white brush (Davis, 1966; Tewes and Miller, 1987; Tewes and Schmidly, 1987). These cats do not require a particular plant species for habitat, but prefer areas with dense cover (preferably at least 95 percent canopy brush cover) for protection (Tewes and Everett, 1986).

Radio tracking studies have determined the average composite home range for adult resident ocelots in south Texas is about 5.8 square miles, with male ranges a little larger than females. Male ranges often overlap one or more female ranges to facilitate breeding. The minimum area for suitable habitat is about 100 acres per brush stand or 75 acres for two or more proximate stands with connecting brush corridors. The remaining optimum habitat available to these cats in south Texas is estimated to be less than 50,000 acres or less than 1 percent of the total land in the area (USFWS, 1990). Based on these density and spatial pattems, a crude estimate of ocelot numbers in Texas ranges from 80 to 120 individuals (Tewes and Everett, 1986). However, it is believed ocelot numbers are far lower because many suitable brush stands are uninhabited due to a lack of connecting corridors to provide safe passage. Without these protected travel corridors, most dispersal by young cats is unsuccessful and frequently ends in mortality, particularly when crossing highways (Tewes and Miller, 1987). Similar population estimates are not available for jaguarundis and even their occurrence has not been recently documented in Texas (Tewes and Schmidly, 1987). The last known occurrence was a road kill recorded in Cameron County on April 21, 1986 (USFWS, 1990).

Because the Rio Grande Valley area has ideal growing conditions for crops, over 95 percent of the land in south Texas has been cleared over the last 60 years for agricultural purposes. Concomitantly, the ocelot and jaguarundi populations have declined until they were listed as endangered by the USFWS in July 1982. The principal threat to their existence remains habitat loss and fragmentation in Texas (USFWS, 1990).

3.2.5.10 Black Lace Cactus

The species Echinocereus reichenbachii has six recognized varieties extending from western Kansas to northern Mexico, usually occurring among rocks in limestone country. The small, showy, highly desirable black lace cactus (var. albertii) is an exception to this, occurring in sandy-loam brush tracts in three counties along the Texas coastal bend: east-central Jim Wells, northern Kleberg, and southern Refugio Counties. Historically known from six locations in these counties, the populations have been reduced through brush clearing for cropland and improved pastures to only three populations on private lands, one

in each county. Besides loss of habitat, over-collecting is another threat to this plant's existence (Federal Register, 1979; USFWS, 1986b).

Its habitat is characterized as the ecotone between the Gulf coastal plain and the more rolling interior mesquite-chaparral country. It generally grows among other low plants (grass, herbs, prickly pear cactus) or under a sparse canopy of small shrubs in openings between dense, often running mesquite brush along streams. The sandy-loam soils vary from level and poorly draining to sloping and well draining. It is salt tolerant and can grow well on open ground in full sun, but seldom survives to maturity in the open because of trampling by cattle grazing in the area (Federal Register, 1979; USFWS, 1986b).

Because of habitat loss and rapid population declines, this cactus was listed as endangered by the Department of Interior in October 1979 and the State of Texas in April 1983.

3.2.5.11 Gulf Coast Hog-Nosed Skunk

This largest of all North American skunks (Davis, 1974) has one of the smallest distributions of any North American skunk (Hall, 1981). Much of its geographic range is in Mexico along the Gulf coastal plain from central Vera Cruz to the Rio Grande, and the U.S. population is restricted to south Texas including the Gulf coastal plains. Currently, two subspecies are recorded in the literature, *Conepatus leuconotus texensis* and *C. l. leuconotus*. However, several researchers have questioned its taxonomic distinctness, postulating it may be conspecific with the western hog-nosed skunk, *C. mesoleucus* (Dragoo, et al., 1988 and references therein). *C. l. texensis* occurs in Texas down to northern Vera Cruz, while *C. l. leuconotus* occurs only in Mexico in Vera Cruz and eastern Puebla (Dragoo, et al., 1988).

Little is known about the species' general biology because it is so secretive and appears to lead a solitary lifestyle with a low population abundance. It is primarily nocturnal and prefers a diet of insects. In Texas, it is most often associated with live-oak or mesquite brushland, but can be found in pasture and semi-open native grasslands. Although data are scarce, many researchers believe its populations are declining, probably due to habitat destruction (Dragoo, et al., 1988). For this reason, it is a candidate species (C1) for listing as threatened or endangered.

3.2.5.12 Aransas Short-Tailed Shrew

This subspecies is the largest of the short-tailed shrews in Texas and is known only from the ANWR in Aransas County where just 10 specimens have been collected and archived. Little is known about the natural history or population status because of its small population and secretive nature (Chapman and Chapman, 1989).

The Aransas population is disjunct, being separated from all other short-tailed shrews of the genus Blarina by about 250 miles. Although this subspecies (Blarina hylophaga plumbea) is morphologically indistinguishable from the other subspecies (B. h. hylophaga), it is retained as a distinct taxon because of geographic isolation. The relict population is thought to have become separated from the rest of Blarina about 1,000 years ago when the post-Pleistocene climate became warmer and drier. As Blarina retreated eastward, the Aransas population was either left behind or a small segment of the population retreated into the area (Chapman and Chapman, 1989).

In Aransas County, the shrew inhabits primarily an oak-bay forest and a ridge and swale community characterized by deep, fine sandy soils. The oak-bay community exists as either dwarf live oaks in dense thickets or large live oaks and red bays in mottes interspersed with grassy flats (Rappole and Tipton, 1987; Chapman and Chapman, 1989). These shrews feed mostly on insects, worms, spiders, snails, mice, and salamanders, but they also consume a relatively large amount of vegetation, which is unusual for shrews in general (Chapman and Chapman, 1989).

The main threats to this candidate species (C2) are based on its small size, the isolated nature of the population, and the near total lack of information on its biology (Rappole and Tipton, 1987).

3.2.5.13 Black-Spotted Newt

This medium-sized salamander (Notophthalmus meridionalis meridionalis) is native to the coastal plain of the semi-arid Tamaulipan Biotic Province of south Texas from Aransas County south to northeastern Mexico (Judd, 1985; Klicka and Rappole, 1989; Rappole and Klicka, 1991). The northern edge of its range is well defined since there is little or no intergradation with the red-spotted newt (N. viridescens) where their ranges overlap, but the southern edge is not well defined around Tamaulipas in Mexico because of intergradation with the closely related neotropical Mexican newt (N. m. kallerti) (Judd, 1985; Rappole and Klicka, 1991). Even inside its range where it is readily distinguishable, its distribution is very patchy due to habitat requirements, habitat degradation, and the

ephemeral nature of aquatic habitat in the Tamaulipan Biotic Province (Rappole and Klicka, 1991).

The black-spotted newt prefers shallow, ephemeral, freshwater pools which readily form after rains on nearly level, poorly drained, very slowly permeable, heavy clay soils. They do not occur in large, permanent bodies of water where large fish and other predators abound. They are well adapted to their temporary aquatic habitat by forming an "eft" or terrestrial stage that travels overland to other pools or aestivates by burrowing up to 3 feet into the soil to await new rains to again fill the pools. They feed on land on small snails and in the water on snails and ostracods (Judd, 1985; Rappole and Klicka, 1991).

Although the black-spotted newt has a very patchy distribution, Rappole and Klicka (1991) do not think it is nearing extinction as previously thought (Judd, 1985). Its abundance has not been determined because of its burrowing habit which makes accurate sampling impossible, therefore Rappole and Klicka (1991) believe it may be more abundant than previously thought. However, its habitat is decreasing through urbanization and farming which eliminates or degrades wetlands, rendering them useless to the newts. Further, heavy cattle use of ponds and agricultural runoff (pesticides) degrade many of the formerly clean pools, preventing their use by newts (Judd, 1985; Rappole and Klicka, 1991).

3.2.5.14 Rio Grande Lesser Siren

This eel-like aquatic salamander is one of three subspecies, but has the smallest geographical range of the three, consisting only of south Texas and northeastern Mexico (Conant, 1975; Judd, 1985). Identification to the proper subspecies in some growth stages is difficult and taxonomic reviews of the Family Sirenidae suggest current species and subspecies designations may need revision. Another problem with identifying subspecies is that Siren intermedia texana (Rio Grande lesser siren) and S. i. nettingi (western lesser siren) tend to intergrade where they overlap near the coast from Nueces County to perhaps as far north as Matagorda County (Conant, 1975; Judd, 1985).

All three subspecies of the lesser siren inhabit shallow, warm, quiet, turbid waters where there is abundant vegetation. They are primarily nocturnal and feed on small bottom-living animals such as crayfish, worms, snails, and insects. During droughts, they burrow deep into the mud where they secrete a mucous cocoon to protect them from desiccation. They can remain inactive for 2-3 years (Conant, 1975; Judd, 1985).

Siren populations in Texas and Mexico are decreasing, primarily as a result of habitat destruction or alteration from farming, roads, urbanization, and drainage programs that eliminate many of their shallow ponds. However, sirens are able to exploit irrigation and drainage canals and can survive in areas that have been cleared and drained. As a result of its flexible habitat requirements, it appears the Rio Grande lesser siren is not endangered, although its populations are still decreasing (Judd, 1985).

3.2.5.15 Gulf Salt Marsh Snake

This nonvenomous species is the only striped water snake normally occurring in a salt or brackish water habitat (Conant, 1975). It is found in the Gulf coastal marshes from Florida to central Texas (Aransas County) where it utilizes crayfish and fiddle crab burrows in salt-grass margins of tidal mud flats. It feeds on small aquatic and marine species, including frogs, crayfish, killifish, mullet, and shrimp. This candidate species (C2) was formerly numerous, but now is declining in abundance due to widespread commercial development of coastal marshes and the concomitant pollution of tidal wetlands (Tennant, 1985).

3.2.5.16 Texas Diamondback Terrapin

This mostly aquatic turtle is restricted to a narrow strip of salt and brackish water habitat along the Atlantic and Gulf coasts from Cape Cod, Massachusetts to Corpus Christi Bay, Texas. Early reports of this species from more southern areas of the Texas coast and from Mexico have not been verified (Palmer and Cordes, 1988).

Seven subspecies with adjoining populations have been recognized (Conant, 1975; Mabie, 1988b), but geographic variation has not been studied and the taxonomic status of some races is problematic (Palmer and Cordes, 1988). The turtles live in coastal marshes, tidal creeks and channels, coves, estuaries, and lagoons behind barrier beaches where they feed on a variety of crustaceans, mollusks, fish, and insects (Palmer and Cordes, 1988). They are most active at high tide (Mabie, 1988b), and can be found basking on exposed mud flats when not foraging for food (Palmer and Cordes, 1988).

The Texas diamondback terrapin was first threatened in the early 1900's when excessive market hunting reduced their numbers, but they quickly recovered when the gourmet food fad faded. More recently, the populations have been threatened by alteration of their estuarine habitats by altering salinity regimes and urbanization of coastal areas (Palmer and Cordes, 1988). Another threat to the turtles is entrapment in crab traps and shrimp trawls (Mabie, 1988b).

3.2.5.17 Cagle's Map Turtle

This small, highly aquatic species is a restricted endemic occurring only in certain segments of the Guadalupe River in south-central Texas and a small contiguous reach of the San Marcos River. It has disappeared from the upper San Marcos River and other rivers of the Guadalupe system, such as the San Antonio and Blanco Rivers (Federal Register, 1993b). It is currently found only in (1) the upper Guadalupe River from Kerrville to Seguin in small, disjunct populations, (2) the middle Guadalupe River from Seguin to Cuero (including the San Marcos River), and (3) the lower Guadalupe River from Cuero to Victoria. The middle Guadalupe River supports the main turtle population (about 144 river miles) with an estimated 60 percent - 70 percent of the entire species numbers in this segment. The number of turtles decreases downstream from Cuero and disappears in the vicinity of Victoria (Killebrew, 1991; Federal Register, 1993b).

Cagle's map turtle is absent from deep water and non-riverine habitat in its range and prefers riffle and pool habitats. Adult males feed primarily on insect larvae occurring in rocks above gravel bar riffles and adult females feed mainly on clams in shallow pools. The species feeds during the day and remains inactive on the river bottom at night (Killebrew, 1991; Federal Register, 1993b).

The primary threats to the turtle's existence are (1) an extremely limited distribution, (2) suitable habitat within its range is fragmented and becoming more scarce (losses primarily from impoundments and water diversions), (3) its diet of aquatic invertebrates may be adversely affected by altered instream flow, pollution, and increased sedimentation, and (4) human predation in the form of shooting and over-collecting for the pet trade, zoos, museums, and scientific studies (Federal Register, 1993b).

The USFWS has sufficient data to warrant listing this species, but will delay listing until other species with higher priorities have been listed. The USFWS feels the priority for Cagle's map turtle is lower because, although the threat from impoundment projects is high, it is not an ongoing or imminent threat (Federal Register, 1993b).

3.2.5.18 Texas Horned Lizard

This strangely-shaped lizard is the largest of the "horned toads" found in Texas. It is found in Kansas, southwestern Missouri, southeastern Colorado, throughout Oklahoma and Texas, southern New Mexico, southeastern Arizona, and the northern States of Mexico. It is a diurnal lizard feeding on a variety of insects (one of the few animals that feed primarily on ants) and occupies a variety of habitats from deserts (including coastal

barrier islands in the Gulf of Mexico) to grasslands. Soils in these habitats vary from pure sand along the Gulf coast to sandy-loams and coarse gravels. Vegetation associated with these habitats include shortgrass prairie, mesquite shrublands, and desert grasslands. It is typically found in flat, open terrain with sparse plant cover where it patiently waits for its prey to wander by. The lizard has virtually disappeared from Texas east of a line from Fort Worth through Austin and San Antonio to Corpus Christi (Conant, 1975; Price, 1990).

3.2.5.19 Audubon's Oriole

This colorful bird was once common in south Texas down to northwest Guatemala where it frequented the mesquite and thorn scrub lands inland from the coast. It generally spends its time hiding behind a thick cover of leaves in the densest woods or thickets where it feeds on insects and seeds. It nests in south Texas, but ranges as far north as San Antonio outside the breeding season. Along with the other brush community dependent species of south Texas, this subspecies has suffered dramatic population declines since the 1920's as a result of brush clearing for agriculture and urban development (Oberholser, et al., 1974).

3.2.5.20 Ferruginous Hawk

This very large, long-winged buteo inhabits the grasslands, shrublands, and deserts of the western U.S. and Canada, including northwest Texas. The northern populations tend to be more migratory, spending the winter in New Mexico, Colorado, Kansas, Oklahoma, Texas, and Mexico. In Texas, the hawk winters regularly over the western third of the state, but occasionally on the lower Texas coast. Because the bird is so sensitive to human disturbance while nesting, the nesting area in Texas has been shrinking until it is recorded only in the farthest reaches of the northwestern panhandle. The hawk forages over the wide-open spaces of the dry Great Plains and Great Basin in western North America for small mammals, primarily rabbits, ground squirrels, and, especially, prairie dogs. It is probably the dramatic reduction in prairie dog numbers and increased human disturbance and habitat alterations (agriculture and development) of its habitat that have led to the decline in numbers of this candidate species (C2) for listing as threatened or endangered (Oberholser, et al., 1974; Jasikoff, 1982).

3.2.5.21 Northern Gray Hawk

Also known as the Mexican Goshawk, this small buteo ranges from the U.S.-Mexican border south to Brazil. It is migratory in its northern range and has been recorded very rarely as far north as Corpus Christi. The hawk prefers mature woodlands (large

trees) along rivers, but will utilize nearby mesquite and scrub grasslands. As a result of land clearing in extreme south Texas, the hawk has increasingly become a rare winter visitor to the Rio Grande Valley (Oberholser, et al., 1974).

3.2.5.22 Loggerhead Shrike

Commonly called the "butcher bird" because of its habitat of impaling its prey (insects, lizards, mice, shrews, and small birds) on thorns or barbed-wire fences, this hawk-like bird is about the size of a mockingbird, but heavier-bodied with a hooked bill. Several subspecies are found from southern Canada south to Baja California and central mainland Mexico and east to the Gulf states. The bird migrates south in the winter, occasionally as far as Mexico. In Texas, it breeds in the summer mostly in the upper half of the state (above Corpus Christi) and is common throughout the state during the winter. The species prefers open or semi-open country with scattered trees, thorn brush, and hedgerows. It is commonly seen perched on fences, bushes, trees, and telephone wires along highways and railroads (Oberholser, et al., 1974).

3.2.5.23 Texas Botteri's Sparrow

This small sparrow is found in Arizona, south Texas, and Mexico. It is common in south Texas, but rarely moves as far north as Corpus Christi. It prefers tall bunchgrass (Spartina spartinae) along coastal Texas with some scattered mesquite and huisache bushes. The Botteri's sparrow nests on or near the ground and feeds there on insects, spiders, and seeds. It migrates to Mexico for the winter (Oberholser, et al., 1974).

3.2.5.24 Texas Olive Sparrow

This small sparrow is primarily a Central American resident that ranges from Costa Rica and British Honduras through Mexico into south Texas and up to Rockport (rare). The olive sparrow spends its life on or near the ground feeding on insects and seeds and nesting in dense thickets of thorny shrubs such as mesquite, Texas ebony, anacua, huisache, and retama (Oberholser, et al., 1974).

3.2.5.25 Reddish Egret

The reddish egret is possibly the most restricted of the herons, both geographically and ecologically, occurring almost exclusively in the coastal marine environment where it feeds and nests colonially on coastal islands (Palmer, 1962; Oberholser, et al., 1974; Hancock and Kushlan, 1985). Reddish egret populations were severely depleted in the

early 1920's by plume hunters but later recovered only to decline again in the 1940's and again in the 1960's (Paul, 1977; Hancock and Kushlan, 1985). The most recent declines are probably related to coastal development and a concomitant loss of habitat. Although down from the earliest population estimates before the 1920's, the egret's population now appears to have stabilized and is perhaps slightly increasing (Paul, 1977). The largest concentration of nesting birds is in Texas where about 1,600 of the estimated 1,900 known pairs are known to occur (Oberholser, et al., 1974; Paul, 1977).

Although not as abundant as some of the other heron and egret species in the marshes of the ANWR, the reddish egret can be found actively chasing its prey in the shallow ponds and marshes in the area. The egret was found nesting in four local waterbird rookeries in 1990 (the latest data available): Espiritu Santo Bay (Steamboat Island, 7 pairs), San Antonio Bay (Second Chain of Islands, 75 pairs), Mesquite Bay (Third Chain of Islands, 15 pairs), and Aransas Bay (Long Reef-Deadman Islands, 120 pairs) (Texas Colonial Waterbird Society, 1992).

3.2.5.26 White-Faced Ibis

This medium-sized marsh bird occurs mostly along the coastal regions of southwestern Louisiana, Texas, Mexico, and South America. In Texas, they nest mostly in coastal rookeries, although they have been recorded nesting in inland rookeries in the past. This species exhibits some southward migration during the winter, but it is incomplete and some birds can be found along the Texas coastal areas all year (Oberholser, et al., 1974).

The white-faced ibis prefers freshwater marshes, sloughs, and rice fields to salt marshes where they probe the shallows and muddy shores for crayfish, earthworms, and small mollusks. When the opportunity arises, they also take fish, frogs, newts, leeches, and insects. Apparently, it is their close affinity to rice fields that has caused the species to decline since the 1970's. Increased pesticide use in rice farming has caused concentrations of dieldrin and other chemicals to rise in the adults to levels that impair reproduction (Oberholser, et al., 1974).

This ibis has been recorded in the ANWR feeding in the fresh to brackish marshes near the shoreline. However, it has not nested in any of the regularly censused rookeries in the area since 1977 when one pair of birds was recorded on the Second Chain of Islands (Texas Colonial Waterbird Society, 1992).

3.2.5.27 Long-Billed Curlew

This species is the largest sandpiper in the United States and is found in the prairie regions of Canada and western U. S. to Texas, and along the coastal regions of California, Texas, Louisiana, Florida, and south to Mexico and Guatemala. It is a year-round resident along the Texas coast, but exhibits some spring - fall migration. Breeding is now restricted mostly to remnant prairies of southwestern Canada and the western U. S., but has been recorded along some coastal areas of Texas in the past. These birds prefer to feed on small crabs, crayfish, snails, frogs, worms, insects, and berries found in short-grass plains, meadows, prairie ponds and sloughs, fresh and salt marshes, and flats and shores of Gulf coast regions (Oberholser, et al., 1974).

The long-billed curlew is a fairly common bird at the ANWR. It is frequently found feeding along the edge of the marsh or on mudflats along San Antonio Bay and at McMullen Lake, but has not been recorded nesting in the area. Annual Audubon Christmas Counts have recorded 7 to 50 birds on the Refuge during their counts (McAlister and McAlister, 1987).

3.2.5.28 Snowy Plover

Although the USFWS only listed one subspecies of snowy plover (western snowy plover, Charadrius alexandrinus nivosus) as potentially occurring in the ANWR area (Table 4), there is one other subspecies (southeastern or Cuban snowy plover, C. a. tenuirostris) that breeds (summer) and winters in the area. Since the two subspecies are indistinguishable in the field, but are known to intermix during the winter from banding studies (Ted Eubanks, pers. comm.), both subspecies will be considered here as simply the snowy plover when evaluating presence near the proposed project and project impacts.

As many as 12 subspecies of this tiny cosmopolitan plover occur in the warmer parts of all continents (except Antarctica) and on many islands (Oberholser, et al., 1974; Federal Register, 1993c). In the U.S., the Pacific coast population of the western subspecies has recently been added to the Federal list of threatened and endangered species (Federal Register, 1993c), but the inland population of the western subspecies and all populations of the southeastern subspecies remain classified as a candidate species (C2).

In Texas, both subspecies occur along the coast where they tend to inhabit the higher and drier nonvegetated beach areas above that preferred by the piping plover (see Section 3.2.5.8). South of Corpus Christi where the snowy plover is most abundant, snowy

plovers tend to segregate from piping plovers and feed on flies and other insects among dried sea grass, algae, or other wave-tossed litter. Along the north Texas coast where tidal flats are less extensive, the snowy plover tends to mix more with piping plover and feed more in moist sand or mud on small mollusks, crustaceans, and polychaetes (Ted Eubanks, pers. comm.).

Although the subspecies status of populations breeding east of the Rocky Mountains has been questioned by some researchers (Federal Register, 1993c), the breeding birds along the Gulf coast are thought to belong to the southeastern (tenuirostris) race (Ted Eubanks, pers. comm.). The western race is thought to breed in the western plains states to the Texas panhandle and west Texas plains and tend to migrate the farthest. The southeastern race tends to migrate only short distances, if at all, but some birds may move as far south as the Laguna Madre in northeastern Mexico during the winter. This subspecies, unlike the western race, has decreased sharply in numbers, primarily because of disturbance (predation and human use) and destruction (coastal development) of nests and habitat (Ted Eubanks, pers. comm.).

The snowy plover probably nests along the relatively secluded and undeveloped beaches of San Jose and Matagorda Islands near the designated Critical Habitat for the endangered whooping crane. There have also been sightings of snowy plover in the same locations reported previously for the piping plover (see Section 3.2.5.8) on Blackjack Peninsula in the ANWR (Tom Stehn, pers. comm.).

3.2.5.29 Mountain Plover

Contrary to its name, this medium-sized plover actually avoids mountains. Instead, it prefers upland shortgrass plains and level plateaus of the western U.S. (Montana south to New Mexico, Oklahoma, and Trans-Pecos and panhandle of Texas) during the summer. During the winter, the birds move toward the Pacific (California and Mexico) and Gulf coasts (Texas), but stop short of beaches, salt marshes, and mudflats. At this time, the birds prefer the coastal prairies, alkaline flats, plowed fields, and similar open terrain (Oberholser, et al., 1974).

3.2.5.30 Rough-Seed Sea Purslane

This annual forb is endemic to Texas and prefers brackish swales and wet depressions in dunes along the south and central Texas coast, including the general area around the ANWR (Correll and Johnston, 1970; Correll and Correll, 1975; Jones, 1977).

However, a plant survey of the ANWR during 1985 - 1987 did not locate this candidate plant (C2) among any of the plant communities of the Refuge (McAlister, 1988).

3.2.5.31 Texas Windmill Grass

This rare, short to medium, perennial grass is endemic to Texas and grows on the silty loam soils of the coastal prairies (Hitchcock, 1950; Correll and Johnston, 1970). The 1985 - 1987 plant survey of the ANWR did not record this candidate species (C2) on the Refuge, however six other species in the genus were listed in the upland grasslands and ridge and swale communities of the Refuge (McAlister, 1988).

3.2.5.32 Welder Spiny Aster

The genus to which this plant was assigned (Machaeranthera) is a large, morphologically diverse group of species that have recently been split into different genera based on DNA studies of the chloroplasts. Many of the species were originally lumped together based on some morphological similarities which later proved to be a result of convergent evolution, hybridization, or a combination of both. As a result of these genetic studies, Machaeranthera heterocarpa (Welder spiny aster) has been reassigned to the genus Psilactis (Morgan, 1993). Even after this taxonomic revision, Morgan (1993) states that Psilactis, as currently defined, is not a natural group, and that some morphological similarities between the six species in the group may have come about through convergence.

The Welder spiny aster is an annual herb that is restricted to coastal Texas scrub flats in Refugio, San Patricio, Victoria, and Nueces Counties (Morgan, 1993; Angela Brooks, USFWS, pers. comm.).

3.2.5.33 Threeflower Broomweed

This low, bushy annual forb is not a candidate species for the Federal register of threatened and endangered species, however it is considered here because it is a species of concern to the Texas Natural Heritage Program.

The threeflower broomweed is rare and local to Texas and has been recorded in Aransas, Brazoria, Calhoun, Harris, Jackson, and Refugio Counties (Correll and Johnston, 1970), more specifically around Austwell and ANWR (Jones, 1977). A 1985 - 1987 plant survey of the Refuge found the plant growing in the upland grassland community near Hwy. 35 in the Salt Creek Unit (McAlister, 1988).

3.2.6 Water and Sediment Quality

The USCE has taken water and sediment samples before each maintenance dredging project since 1977 to analyze for a variety of heavy metals and organic compounds that may have been released in the area by accidental spills or fugitive releases. These analyses were related to maintenance dredging of the GIWW only and represent the conditions and quality of water and sediments in the channel, not the surrounding bays. Also, not all the heavy metals and organic compounds were consistently tested during each sampling period, but represent an evolution in the development of EPA criteria to test for chemicals considered most damaging to organisms common in this environment.

Historical sample data do not indicate any significant water or sediment quality problem within the project area (USCE, 1989). The heavy metals and organic compounds generally do not exceed EPA water quality criteria, where they exist, and EPA has not identified any criteria for marine sediments. In general, the sediment values for these parameters are below detection limits, with the exception of high oil and grease values discovered in 1984-1985. Apparently, these high values were aberrant or temporary because they have not been found in any subsequent analyses.

Bioassessment studies to determine any bioaccumulation in the usual laboratory test organisms exposed to sediments and tissues of potential whooping crane food items collected in the area by the USCE and USFWS could not find any differences in survival rates of exposed and control test organisms or any high background levels in tissue samples (USCE, 1989; USFWS, 1985). These results indicate that sediments in the study area are generally free of contaminants and that resuspension of contaminants by dredging is not likely to occur. Also, bioaccumulation has not been found to occur in whooping crane food species and only localized and minor concentrations of a few contaminants have occurred in the past (USFWS, 1993).

Water quality is considered a significant resource based on its relationship to Section 404 of the Clean Water Act which regulates the discharge of dredged or fill material into waters of the United States, which includes wetlands. Those wetland resources which occur in the immediate project area and would be impacted by the proposed project are discussed in Section 4.0 of the EIS. A Section 404(b)(1) Evaluation is presented in Appendix B.

3.2.7 Hazardous, Toxic, and Radioactive Wastes

An assessment of the study area was conducted to determine the existence of, and potential for discovering, Hazardous, Toxic and Radioactive Waste (HTRW) sites. HTRW sites pose a risk to public health and the environment, could affect, or be affected by the project activities, and have the potential for causing project delays and escalating project costs. As such, HTRW sites are identified and managed early in the study. Assessment findings indicate that there are no HTRW sites within the study area. Records from the Railroad Commission of Texas indicate a total of 24 oil and gas wells in the study area, two of which are active gas wells. There are 12 pipeline crossings within the study area.

3.2.8 Historic Resources

The general project area has been utilized by man for at least 10,000 years. Only artifacts from this earliest period have been recovered, but more recent aboriginal site remains attest to the use of this biologically diverse area by prehistoric peoples for hunting, fishing, and gathering. Extensive seasonal camp sites have been found within one mile of the project area. Historic contact with this portion of the Texas coast occurred in the 16th century by Spanish explorers. No historic settlement is known to have occurred in the project area, although important early settlements were established both to the east and west on protected bays. Open range ranching was the primary use of the land in the project area during the historic period. Commercial shipping along the barrier islands was underway by the early 19th century, with the original "Old Intracoastal Canal" dredged between 1873-1875. In the project area this original route lay generally to the south of the modern Intracoastal in more open waters.

A historic resource survey of the project area directed primarily at the identification of prehistoric sites was conducted with negative results. Particular attention was paid to land areas cut by the original dredging of the modern GIWW, and natural shorelines. Nine previously recorded prehistoric archeological sites are all located north of the project area on higher ground and will not be affected by the proposed project. Extensive archival research was also conducted to identify early historic sites and shipwrecks. As a result of this work the following resources were identified: a 19th century structure on or near Bludworth Island that may be affected by Beneficial Use Site "I", and 9 shipwrecks of undetermined age in the general project area. Specific locations have not been verified for these wrecks.

3.2.9 Socioeconomic Resources

The study area covers three Texas counties--Aransas, Calhoun, and Refugio. Together these counties encompass 1,534 square miles and possess a 1990 population of 44,921 persons. That 1990 count represents a population growth of 1,798 persons within the area, increasing 4.2 percent over the 1980 Bureau of the Census count. During the same period, 1980 to 1990, the State of Texas experienced a population growth of 19 percent. The rural character of the study area is evidenced by its 1990 population density of 29 persons per square mile which is less than half the state's density of 65 persons per square mile.

The area is further characterized by unemployment rates and poverty rates which are both higher than the State's equivalents and by lower per capita income levels and lower housing values than at the State level. Aransas County has been growing over the past 20 years at an average annual rate of 3.6 percent while Refugio County has been losing population at an average annual rate 0.9 percent during the same period. Refugio County has been hardest hit by the economic downturn which accompanied the decline in domestic oil exploration and production.

3.2.9.1 Local Economy.

The economies of the three counties in the study area are based primarily in agricultural production of rice, grain and sorghum; petroleum production and petrochemical processing; manufacturing of chemicals, chemical products, fishing apparatus, and offshore oil well platform modules; commercial fishing; and tourism. In 1991 the 960 businesses in the study area generated payrolls in excess of $244 million. The majority of these businesses are located in Aransas and Calhoun counties. Tourism, one of the main industries in the region, generated an income of over $65.5 million in 1992 (Travel Spending in Texas Counties, Texas Department of Commerce, Tourism Division, 1993).

3.2.9.2 Navigational Features.

The regional waters within the study area are vital to both the tourism and the water transportation industries. The study area contains one deepwater port and two shallow draft ports--each served by both the Gulf of Mexico and the GIWW. Although the Channel to Victoria is located in Victoria County, the channel itself passes through the study area.

Calhoun County has over 100 miles of navigable channels, one deepwater port and a shallow draft port. The deep draft port at the Port of Point Comfort is served by the

Matagorda Ship Channel, the GIWW, and the Gulf of Mexico. The channel carried over 5 million tons of cargo in 1992 (USCE, Waterborne Commerce Statistics Center, Jan 94). In October 1988, the Formosa Plastics Corporation announced a $1.5 billion expansion of their existing plant at Point Comfort. The expansion project will increase tonnage being shipped by the company by approximately 4 million short tons (Port of Port Lavaca-Point Comfort, statement, 30 April 1992).

The Port of Port Lavaca is a shallow draft port. This port has two shallow draft harbors, each with a draft of 12 feet. The port handles some barge traffic but is used mostly for recreational and commercial fishing and shrimping. Calhoun County also has an extensive industrial park section located on the Channel to Victoria. This area consists of large petroleum and chemical companies such as Union Carbide, Du Pont de Nemours, British Petroleum, Vistron, GAF Chemical Plants and Airco. These companies chose to locate facilities along the Channel to Victoria for the efficient, low-cost water transportation afforded by the GIWW. In 1992, 4.2 million short tons was moved on the Channel to Victoria along the GIWW (USCE, Waterborne Commerce Statistics Center, Jan 94).

3.2.9.3 Recreational Features.

The extensive coastline of the three counties provides an abundance of primary recreational opportunities within the study area. All three counties are contiguous to the Gulf of Mexico or bay waters giving the region natural water recreational amenities. The freshwater and coastal waters, with both beach and shoreline areas, offer important recreational opportunities for boating, fishing, skiing, swimming, hunting, camping, picnicking, and enjoyment of nature. Rural outdoor recreational opportunities are provided by all levels of government and the private sector. There are approximately 67,000 acres in the region devoted to wildlife preservation, the largest being the Aransas National Wildlife Refuge (54,829 acres on Blackjack and Lamar Peninsulas). In addition, there are four state parks covering approximately 832 acres which provide recreational activities such as boating, fishing, swimming, camping, hunting, and picnicking.

The ANWR is located midway between Rockport and Port Lavaca on the Texas Gulf Coast, eight miles southeast of Austwell, Texas. This Refuge accounts for approximately 55,000 acres of oak woodland, fresh and saltwater marshes, and coastal grasslands near the GIWW. The Refuge provides critical habitat and wintering grounds for the endangered whooping crane. The Refuge is also home to deer, javelina, alligator, and many other species of wildlife.

Table 5 shows historical and projected visitation at the ANWR. The USFWS makes annual visitation distributions based on the time of year. Future visitation for peak months was derived by projecting the USFWS's year 2000 estimate to the year 2040. Visitation in off-peak months was estimated from growth rate projections for the region and Texas.

The employment sectors which benefit from recreational visitation to the Refuge are as follows: retail trade services, hotels, lodging places, amusements, personal services, and eating and drinking places. The Rockport-Fulton Area Chamber of Commerce noted that the average visitor to Aransas County spends $20.23 per day. In addition to the visits to the ANWR, the Chamber noted that a subset of those visitors (15,000 persons in 1993) spend $20 each for a commercial boat tour of the Refuge. This represents an additional travel expenditure of $300,000 in the study area annually. Economic multipliers describe the reaction of an industry or economy to an infusion of additional spending. Economic multipliers were aggregated and averaged in order to derive a single income and employment multiplier. The number of visitors times the multiplier times the computed daily expenditures, including commercial boat tours, were computed in order to derive the

Table 5
Historic and Projected Annual Visitation to the Aransas National Wildlife Refuge

Year	No. of Visitors
1960	13,294
1970	98,520
1980	61,436
1990	76,329
2000	85,000
2010	95,000
2020	106,000
2030	117,500
2040	131,000

Source: U.S. Department of the Interior, Aransas National Wildlife Refuge, written correspondence (for years 1960-1990).

regional economic contribution of recreational visitation to the Refuge. The annual contribution of the wildlife refuge to the surrounding economy is, therefore, estimated to be $4.7 million in income which supported 247 jobs in 1990. This constitutes about 7 percent of the State's estimate of tourism revenue within the study area.

4.0 ENVIRONMENTAL CONSEQUENCES

4.1 NO ACTION (FUTURE WITHOUT)

4.1.1 General

Although the No Action alternative is not the recommended plan, it is discussed here as a comparison for the recommended plan. The No Action plan was discussed in detail in Section 2.3.1. One benefit of this plan is that after vessel traffic ceases to use the channel, the threat of toxic spills will also cease, eliminating one more potential threat to the whooping crane's survival.

4.1.2 Vegetation

If no action is taken to halt erosion of the marsh-pond habitat along the GIWW within the critical habitat after 1995 (when the Feasibility Report and EIS is completed), the bank will continue to erode at a rate of 2 acres or more per year. Under No Action, the USCE will be in violation of Section 7 of the ESA and potentially subject to lawsuits by environmental groups. Continuing erosion (even if navigation ceases after 2003) will cause the direct loss of approximately 64 acres of salt marsh (Table 1) in the critical habitat by 2051.

The 18,000 feet of bank already protected will not be impacted beyond the loss of some marsh vegetation removed during installation of the armoring at the site. There may be some additional, temporary minor disturbance during future maintenance of the mats already in place.

4.1.3 Wildlife Resources

The wildlife commonly found along the channel edge will not be noticeably affected with the small loss of their habitat since most are not restricted to one small area. Most of the species, especially birds and other vertebrates, are highly mobile and will easily adjust to the slow loss of marsh habitat not already protected.

4.1.4 Aquatic Resources

Most marine species will not be measurably affected by the loss of some marsh, especially when considered against the background loss of hundreds of acres of marsh

over the same time span in all the bays along the Texas coast. However, these marshes are important to about 95 percent of the estuarine species because they are dependent on the marshes as habitat at some time in their life cycle for refuge, sanctuary, food, and as a nursery. The loss of about 1,075 acres of marsh pond/lake habitat could affect productivity of certain invertebrates, such as blue crabs, which are dependent on the protected shallow waters to grow in. These crustaceans, in turn, are important food items in the diet of whooping cranes. Therefore, it is important to save as much of the marsh and pond habitat as possible because these small, cumulative losses will eventually affect estuarine productivity and, possibly, the survival of an endangered species.

4.1.5 Threatened and Endangered Species

Of the 20 threatened or endangered species listed in Table 4, only the whooping crane and piping plover are likely to be adversely impacted by the No Action plan. Erosion may eventually take some of the piping plover's feeding habitat on some small beaches along the channel. The whooping crane, however, will lose about 64 acres of marsh and 1,075 acres of pond habitat along some of the most crowded territories in its critical habitat. Although this loss may not jeopardize the survival of the species, it could affect the survival of several pairs of cranes whose territory is slowly disappearing.

None of the 23 candidate or State species of concern are likely to be adversely affected, with the exception of the snowy plover. This small bird generally occurs in the same areas as the piping plover and will eventually lose some of its feeding habitat along with the piping plover. Several other species use the marsh-pond habitat, such as reddish egret, diamondback terrapin, and salt marsh snake, but these animals do not defend a territory and can easily adjust as the marshes slowly erode.

4.1.6 Water and Sediment Quality

There will be no meaningful temporary or long-term impacts to water and sediment quality in the project area without the project. Water and sediment parameters for heavy metals and organic compounds currently fall within EPA guidelines and are expected to remain the same or decrease slightly under No Action, especially after closure of the GIWW in the study reach sometime around 2003.

4.1.7 Hazardous, Toxic, and Radioactive Wastes

Impacts to HTRW under No Action are as described in the affected environment in Section 3.0.

4.1.8 Historic Resources

Impacts to historic resources are not anticipated under this scenario.

4.1.9 Socioeconomic Resources

Tables 6 and 7 present ANWR projected visitation for the years 2000 to 2040, with simulated visitation declines of 10 and 25 percent. Assuming that a loss in visitation is proportional to a loss in habitat, the indicated declines show what might happen if the whooping crane habitat were damaged and visitation declined as a result. These declines are combined with the economic multiplier to provide an estimation of the effect a decline in visitation could have on the local economy of the study area.

Table 6
Projected Economic Impacts of a 10 Percent Visitor Decline
to the Aransas National Wildlife Refuge

Year	Projected visitors (10% decline)	Travel Spending Losses	Travel Generated Income Losses (1994 dollars)	Number of Employees Lost
2000	76,500	$205,000	$525,000	28
2010	85,390	$229,000	$586,000	31
2020	95,184	$256,000	$653,000	34
2030	105,778	$284,000	$726,000	38
2040	117,555	$316,000	$807,000	42

Table 7
Projected Economic Impacts of a 25 Percent Visitor Decline
to the Aransas National Wildlife Refuge

Year	Projected visitors (25% decline)	Travel Spending Losses	Travel Generated Income Losses (1994 dollars)	Number of Employees Lost
2000	63,750	$513,000	$1,312,000	69
2010	71,158	$573,000	$1,465,000	77
2020	79,320	$639,000	$1,633,000	86
2030	88,149	$710,000	$1,815,000	95
2040	97,962	$789,000	$2,017,000	106

At present, the three counties are attempting to broaden their industrial base and reduce their dependency on the oil and gas industry. The Refuge, a specialized and one-of-a-kind tourism site, is valuable to the region from an economic as well as an environmental standpoint. With stable oil prices, the area surrounding the ANWR area is cultivating an old, but underdeveloped industry--tourism. Travel expenditures, employment and wage projections are expected to have increased from their 1992 levels since the counties have placed a high priority on bolstering tourism (Rockport-Fulton Area Chamber of Commerce, 1994).

Future activities which are expected to impact the region include the growth of hotel and motel complexes, tourist travel, and petroleum industry expansion. With the expansion of employment through diversification, the area can expect economic growth in the future. Growth in tourism will be based on the continued appeal of the area as a recreational destination and also on the preservation of the whooping crane. No action on the part of the Federal government to preserve whooping crane habitat runs contrary to local efforts toward economic development.

4.2 ALTERNATIVE 2 - EXISTING ALIGNMENT

4.2.1 General

The existing alignment of the GIWW with bank armoring to protect the whooping crane's critical habitat from erosion is the recommended plan for this project. A detailed description of the bank erosion protection plan is provided in Section 2.3.3 of the EIS and the Initial Screening - Alternative 2 and Description of Selected Plan - Bank Erosion Protection sections of the Main Report. Locations for bank erosion protection and grout tubes are shown in Figure 6 of the EIS. Another part of the recommended plan is a spill contingency plan to clean up spills and prevent damage to the surrounding marsh (Section 4.2.3). Also included in this discussion, but not part of the recommended plan, is a 50-year dredged material disposal plan with proposed modifications in disposal operations to prevent future levee failures (Section 4.2.4). The overall intent of the recommended plan is to maintain inland navigation through the area using the most cost efficient method while maintaining the environment in its present, nearly pristine condition and preventing further loss of designated critical habitat. This plan best allows the USCE to fulfill its obligations and duties under the National Environmental Policy Act (NEPA) and ESA guidelines and regulations and to meet its goal of providing net positive impacts on whooping cranes and their habitat. This is accomplished in the recommended plan through bank erosion protection, spill containment and clean-up, and in the O&M program through the beneficial

uses of dredged material to create new marsh and by modifying disposal practices to prevent future levee failures.

4.2.2 Bank Erosion Protection Plan

As previously discussed, erosion is still occurring along the GIWW and is reducing the amount of feeding habitat for the endangered whooping crane. In an effort to stop this loss, erosion control using a temporary barrier of concrete bags held in place with steel reinforcing rods was first initiated in 1989 through the cooperative efforts of the USCE; USFWS; several navigation, oil supply, and oil companies; local whooping crane tour guides; and several hundred citizen volunteers. Approximately 6,900 feet of shoreline in the ANWR was protected by these volunteers between 1989 and 1992. In 1992, the USFWS experimented with a more permanent method of shore stabilization using 8-foot wide cellular concrete mattress to protect 400 feet of shoreline. This method was acceptable to the USFWS, so it was added to the list of methods for evaluation (see the Plan Assessment and Screening of Alternatives of the Main Report for the evaluation results). The concrete mattress plan was determined the "best" armoring method and would meet the requirements of the agreement with the USFWS reached during a Section 7 consultation for maintaining the GIWW in designated critical habitat (USFWS, 1993). The USFWS has since issued a compatibility determination for constructing the erosion control and spill prevention features in the ANWR (Appendix B, Section 7).

The USCE has placed about 18,000 feet of concrete mattress varying from 16 to 20 feet wide along the north bank of the GIWW in the ANWR in the summers of 1992 through 1995. Approximately 2,000 feet or more of shoreline will be added each year thereafter, until the Section 216 study is completed and the project is authorized for construction. Authorization is currently expected in FY 1996, with construction to begin in FY 1998. At that time, the remainder of the shoreline identified by the USFWS as requiring protection will be armored for a total length of about 84,000 feet (Figure 6). Additional protection consisting of geotextile tubes filled with dredged material and/or grout will be used to protect the open stretch of Sundown Bay. The 10 sections of tubes will run in approximately 1,000-foot lengths with 100 foot openings between each section for a total length across Sundown Bay of about 10,900 feet. The final length of each section of tubes and number and width of openings will be determined during the PED phase after circulation studies in Sundown Bay are completed. The circulation studies will determine the number and size of openings needed to maintain adequate circulation in Sundown Bay. These tubes will simulate oyster reefs running parallel to the GIWW with the top protruding slightly above the water at low tide. Oysters are expected to colonize the surface of the tubes and form a series of reefs to prevent scouring and deepening of Sundown Bay.

Seagrass coverage and density also should increase in Sundown Bay as a result of the wave protection afforded by the tubes.

The concrete mats and grout tubes will require periodic maintenance and repairs throughout the life of the 50-year project, and will be the responsibility of the USCE. Maintenance of the erosion control components generally would consist of mat repairs and grout tube replacement/repairs, as necessary. These activities would result from normal deterioration, vandalism, boat or barge damage, and storms. Since the Refuge staff frequently monitors the entire reach of waterway through the critical habitat, they would quickly note any maintenance needed and notify the USCE. Maintenance costs are estimated to average $15,000 per year.

4.2.3 Spill Contingencies and Analysis

Because hazardous and toxic cargoes are frequently transported through the critical habitat along the GIWW, the USFWS has expressed concerns during previous Section 7 consultations with the USCE that a large toxic spill from a collision near the Refuge at certain times of the year could result in the death of a large number of whooping cranes. The death of even a few birds in a small population and the contamination of their winter food supply could threaten the entire population with extinction. In order to assess the likelihood of such a catastrophic occurrence, the USCE contracted a study to perform a data search of collisions and spills along the GIWW, calculate the probability of such occurrences in the critical habitat, and evaluate methods for preventing, containing, or cleaning up spills if they occur.

The spill study (Appendix A) looked at data bases compiled by the Coast Guard, Texas Water Commission, Minerals Management Service, and the ANWR for the 5-year period 1986-1990 to determine how many significant spills occurred along the GIWW in a 50-mile stretch encompassing the critical habitat, including the Channel to Victoria. A significant spill was considered to be one of 100 barrels (4,200 gallons) or more. There were many small or fugitive spills of unknown origin, but their effects on the environment were considered unmeasurable compared to a significant spill. Since there were no collisions or significant spills inside the 50-mile study reach, the study looked at the entire 423-mile Texas reach of the GIWW. Only two significant spills occurred at locations other than at piers or docks (there are none in the ANWR area) in the 5-year data base (USCE, 1992).

Because spills were so infrequent, the study used a widely accepted and frequently used parametric statistical method found throughout the scientific literature, known as the

Poisson distribution, to estimate the probability of a significant spill (a rare event in statistical terms) in the 50-mile study reach. The probability of a spill was calculated for the entire 423-mile Texas section of the GIWW and adjusted for the 50-mile study reach and the volume of the particular commodity in question. For the most likely significant spill (gasoline) based on traffic volume in the study reach during 1989, the spill rate is about 1 spill per 1,075 years. For the worst case spill, defined as a collision between two tows carrying petroleum products (petroleum was chosen because it can float far into marsh systems and has long-lasting effects on vegetation and the food chain), the spill occurrence rate for 1989 was calculated at about 1 spill per 7,982 years.

Although these probabilities are very small and could be interpreted as an almost impossible event, they are for predictive purposes only and should not be interpreted as meaning there will not be a collision and spill occurring in the Refuge in the next 24 hours. Factors that could affect this probability include volume of traffic, speed of tow (length of time in the Refuge), and traffic management. Since the North American Free Trade Agreement (NAFTA) was approved by all three nations involved, the volume of traffic could increase in the future. However, by itself, this would not affect the probability very much on the scale of a human lifetime since even quintupling the volume would only increase the probabilities to 1 spill in 215 years or 1,596 years, depending on whether it is a most likely or worst case spill. These probabilities will be reduced even further in the future because the industry is switching over from single-hull barges, which are more prone to leak after a collision, to double-hull barges, which are much safer for hazardous cargoes in a collision.

The USCE also looked at moving the GIWW to the old open-bay route. However, during discussions between experts from the Coast Guard, towing industry, and State and Federal resource agencies in a workshop in Corpus Christi comparing the present GIWW route to the proposed open-bay route, it quickly became apparent that this would cause greater environmental damage to the bay systems during construction and maintenance of the open-bay channel and have a higher potential for accidents and spills than the present route. Containment and clean-up would also be more difficult, if not impossible, because of the very large area of shallow bay waters and strong winds and currents that could spread the contaminants over a much wider area than would occur in the relatively protected land-locked part of the present GIWW. It was considered safer and less damaging overall to leave the GIWW in its present configuration by most of the experts attending the workshop. As an added safety measure, a new mooring area would be constructed along the channel across from Dunham Bay for tows to tie up during windy or foggy conditions when it would be too dangerous to cross the open reach in Aransas Bay.

A similar mooring area already exists across from Welder Flats in case San Antonio Bay is too dangerous to cross.

Even with a very small probability of a significant spill, if one should occur, there are contingency plans in place to deal with spills in the area. The Oil Pollution Act of 1990 mandates that local area contingency plans be developed to coordinate joint Federal, State, and local agency responses to oil spills. Under the National Contingency Plan administered by the EPA, the Coast Guard is required to develop the Federal portion of the local contingency plans. The State response plan is the responsibility of the TGLO under the Texas Oil Spill Prevention and Response Act of 1991. Both agencies have deployed containment and clean-up gear at selected locations along the Texas coast. The Welder Flats area, which makes up the Welder Flats Coastal Preserve, is one of the locations where TGLO maintains some of the spill containment gear to protect the area's sensitive aquatic resources and the whooping crane's feeding habitat.

The Coast Guard's draft South Texas Coastal Zone Area Contingency Plan (June 28, 1993) has designated the whooping crane's Critical Habitat as a critical area of highest priority. Because of the difficulty of cleaning up a spill once it reaches a marsh and the amount of damage done to the marsh while attempting to clean up the spill (usually only partially successful), the Coast Guard has adopted the policy of closing the GIWW to vessel traffic and then attempting to contain the spill and prevent its contamination of the marsh. Also, because of the remoteness of the Refuge, it will take a minimum of four hours (and probably much longer, depending on time of day, season, and location of the spill) for personnel to reach the area after notification of an accident. Therefore, the Coast Guard will rely heavily on Refuge personnel for early containment or organization work until a response team can get to the area. To accomplish this, the Coast Guard has adopted the ANWR's oil spill contingency plan (Robertson, et al., 1993) without changes (see Appendix A). This plan carefully specifies the sequence of events or steps to follow in case of a spill, who has responsibilities for each action, and locations and priorities of sites to be protected.

The concrete mattress and grout tube erosion protection in the critical habitat will help prevent contaminants from reaching the marsh, except on very high tides or under storm conditions. The USCE will also place pilings on each side of all openings to the marsh or cuts leading to the surrounding bays for attaching booms to contain oil or other floating contaminants. For large areas requiring protection that are wider than the normal 100-foot length of spill containment booms, such as Dunham Bay and most of Welder Flats, pilings will be placed parallel to and near the GIWW at about 300 foot intervals. The

booms will be stored at the Refuge in a location to be designated later by the Refuge Manager.

The USCE will assume responsibility for operation, maintenance, repair, rehabilitation, and replacement (OMRR&R) of the spill containment features. The average annual costs for OMRR&R are estimated to be $34,000. The USCE will not be responsible for deployment or clean-up of any accidental spill. The TGLO and the U.S. Coast Guard have responsibilities for spill response, as well as the USFWS as it relates to protection of the habitat of the Refuge. All agencies have agreed that responsibility for spill response, deployment, clean-up, and storage of the spill equipment resides with the USFWS, TGLO, and Coast Guard.

In summary, the following actions have been or will be taken to reduce the potential for a spill and increase the probability of containing the spill if one occurs. First, the probability of a significant toxic spill inside the critical habitat of the whooping crane is very small, even with the possibility of higher commercial traffic volume after passage of NAFTA. Also, if a collision should occur, the potential of a spill is small because the industry is switching over to the use of double-hull barges as a safety factor. If a spill should occur, the Coast Guard and the ANWR, as well as other responsible agencies such as the TGLO, have plans to contain the spill before a significant amount can get into the marshes. Spill containment booms will be stored at the ANWR to reduce deployment time after the spill is reported. However, even with all these precautions, the potential still exists for some contaminants getting into the marsh system and affecting vegetation and winter food supplies of the whooping cranes. More research is needed to find the best and least environmentally damaging ways to quickly clean up a spill and protect whooping cranes if they are in the area.

4.2.4 50-Year Disposal Plan

Although the 50-year disposal plan with beneficial use sites is not part of the recommended plan since it does not require Congressional authorization and can be accomplished under O&M authority, the plan is included in the EIS to document its potential impacts (both beneficial and detrimental) on the environment and Federally- or State-listed threatened and endangered species. The environmental impacts and resource agency concerns are discussed below along with proposed solutions. Potential impacts to threatened and endangered species by this plan are discussed for each listed species starting in Section 4.2.8.

Net losses of whooping crane critical habitat since the original GIWW was completed through Welder Flats and Blackjack Peninsula in 1940 (and including a short stretch of the Channel to Victoria) have amounted to about 2,078 acres (Sherrod and Medina, 1992). This includes direct losses from construction of the channel and disposal of dredged material, indirect losses from wind and vessel waves, sea-level rise and land subsidence, and any gains in crane habitat in the area during the period 1940 to 1986 (the period of analysis for the above reference). Recent annual losses have been calculated at 2.5 - 4 acres per year (USCE, 1989 and Stehn, 1987), mostly on the northern (mainland) side of the channel.

The 50-year disposal plan will offset most of these habitat losses by beneficially using most of the dredged maintenance material to create approximately 1,614 acres of marsh at several selected sites within the critical habitat (Figure 6). The rest of the dredged material will be placed in existing upland disposal areas and one new upland disposal area (upland site 1) located just outside the critical habitat east of Welder Flats. The new disposal area will replace DA 120 and 120A.

Maintenance dredging through the land-locked areas of the critical habitat generally occurs on a 4 to 7-year cycle, depending on the reach of channel. Under the new disposal plan, the smaller beneficial use marsh sites (less than 50 acres) will be filled in one cycle, generally during the first to third dredging cycles for the closest section of channel to the site. The larger beneficial use sites will be subdivided into cells sized to contain most, if not all, of the material to be dredged during its designated cycle in the section of channel assigned for disposal at the site. The exact size of the cell will be determined prior to dredging after surveys are conducted to determine the amount of material to be removed from the channel and the bottom topography and depth of the beneficial use sites to be filled. Confining levees for the cells (probably geotextile tubes) will be constructed at the time of filling. The beneficial use sites will be used during alternating dredging cycles to give the newly created marsh a chance to establish before depositing new material in adjacent cells and then creating connecting channels between cells and the surrounding bay. The connecting channels will allow circulation within and between the cells and bays to enhance their use by estuarine organisms and increase their value as crane feeding habitat.

Three beneficial use sites (C, G, and H) are small (10 - 43 acres) and intended solely to restrict openings to McMullen Lake and Sundown Bay to approximate former widths (C and H) or replace a narrow strip of land lost to erosion (G). Geotextile tubes will surround each site to contain the soft, flowing maintenance sediments to prevent their spread into nearby marsh or shallow, productive pond/lake habitat and to prevent erosion

of the site. The contained marsh will later be planted with Spartina to increase productivity in the area. Grout tubes will also be placed outside the geotextile tubes which are most exposed to currents or waves for added protection (Plates 8, 9, 16, and 20 in the Engineering Appendix). Further studies on the impacts of current scour at each restricted opening will be undertaken during PED to determine the most effective method for preventing this erosive process. As explained above, each of these sites are small enough to allow construction during one dredging cycle as shown in Table 30 of the Main Report.

On an alternating basis, the next dredging cycle will use upland leveed disposal areas and then the beneficial use sites. Site location, size, and dredging frequency are given in Tables 26-31 of the Main Report. To prevent levee failures, the leveed upland sites will have a minimum of 2 feet of freeboard (one more foot than previously used) above ponded water level with more frequent inspections to prevent ponded water from overtopping the levees. By alternating between beneficial use sites and upland leveed sites between cycles, an extra drying time of at least 4 years is established in the disposal schedule which will allow the material to compact more and extend the life of the upland disposal site. The benefits of a dewatering program for the upland sites will be investigated during PED to determine whether sediment compaction can be further increased. The extra capacity may be needed if some unforeseen event should occur, such as a severe storm creating extra shoaling problems or some shoaled material may become contaminated before a particular dredging cycle which must be contained in a leveed site. At the end of the 50-year disposal period, the levees for the upland disposal sites (except upland site 1 east of Welder Flats) are expected to reach final heights of 18 - 36 feet. These heights are based on past dredging history and may change depending on actual dredging volumes encountered in the future.

Upland site 1 which replaces DA 120 and 120A is located about 500 feet northeast of the road going to Fulghum's Fish Camp (outside the Critical Habitat) and 3,000 feet northwest of the centerline of the GIWW (Figure 6). The proposed site is at least 1,500 feet northeast of the closest whooping crane territory (No. 50, Figure 7) and whooping cranes have not been observed feeding in the proposed area (Tom Stehn, pers. comm.). The site covers an area of 100 acres (3,630 x 1,200 feet) plus another 53 acres of right-of-way for access to perimeter levees and pipeline influent and effluent routes. A final levee height for this disposal site after 50 years use is expected to be about 12 feet. The site was chosen to be as near the GIWW as possible to minimize pumping distance and environmental impacts using aerial photographs as a guide. The site avoids the salt flats next to the GIWW (except for the pipeline corridors), all ponds that show up on the photograph, and will remove only a few small live oak thickets in the area. The major benefit of the new disposal site is the elimination of the long, narrow DA 120 which has a

history of levee failure. The disposal site is too narrow for efficient levee maintenance and dredging needs and, as a consequence, material has spilled into Shoalwater Bay covering valuable emergent marsh and seagrass beds used by whooping cranes. DA 121 is expected to reach its capacity by the time the 50-year disposal plan is implemented and will not be part of the new disposal plan.

Whooping cranes are very cautious about approaching high obstructions because of the potential for predators hiding nearby. Therefore, in order to enhance the marshes and aquatic habitat near DA 120 and 121 for whooping crane use and to prevent erosion of levees and their contents which could adversely affect these habitats, the sites will be modified by pushing the levees into the interior of the disposal sites. Upland vegetation will quickly invade the sites to help prevent erosion and provide a diversity of habitats for wildlife in the area.

During past coordination meetings with State and Federal resource agencies, several concerns were raised about the impacts of the beneficial use sites on the environment. In particular, there was a concern about the size of Site A near Shoalwater Bay and Site B near False Live Oak Point and what their impacts might be on circulation between San Antonio Bay and the smaller bays to the north and south. A circulation model will be run during the PED phase to determine what these effects may be and design changes for these sites incorporated into construction plans, if necessary.

Another cause for concern was the large area of shallow bay-bottom habitat that would be converted to marsh and seagrass habitat in the beneficial use sites. The resource agencies requested an evaluation of the benefits of changing one habitat to another. The NMFS was contracted to investigate the consequences of converting unvegetated bay bottom to another wetland habitat. NMFS biologists sampled the shallow, unvegetated bay in the area of the proposed beneficial use sites and compared the nekton abundance at these sites to that found at natural marsh and submerged seagrass beds. They determined that the marsh and seagrass habitats supported much higher densities of fish and decapod crustaceans than nearby unvegetated subtidal areas. They recommended replacing some open bay-bottom habitat with marsh and seagrass habitat and state the change should have a positive effect on most species that were dominant in the study. The area replaced by marsh will be small relative to the total area of open bays in the study area, and the increased benefit of enlarging the habitat area for fishery and forage species that use marsh systems should outweigh the loss of open bay habitat. They also suggest that low marsh edge habitat should be maximized by creating large areas of marsh interspersed with a dense network of shallow channels and interconnected

ponds to enhance the habitat and help them become functionally equivalent to natural marshes (Rozas, et al., 1994, see Appendix B).

Another concern was the proximity of Site E to the Second Chain of Islands which is an important bird nesting site. The concern is that the beneficial use site may be close enough to allow predators (coyotes and raccoons) to gain access to the islands and disrupt bird nesting activities, causing a decrease in the success of the breeding season for several species. The site design will be reconsidered during the PED phase and the boundaries realigned to alleviate agency concerns.

There was also some concern about the quality of the effluent water from the beneficial use sites and its affect on nearby bays. In the past, all effluent from the leveed upland disposal area was returned to the channel. Under this plan, the water will return to the bays during the beneficial use cycle because it will be too far from the channel to return it there. The concern is that the 8 mg/l suspended solids standard cannot be met since the beneficial use cells are designed to be large enough to just hold all the sediments, with no ponding room left over for the solids to settle before effluent leaves the cells. In order to meet the present water quality standards, the cell design will be evaluated during the PED phase to determine the best solution for this problem and coordinated with the resource agencies.

In addition to the precautions and beneficial uses listed above, the USCE will coordinate with the NMFS during the PED phase to monitor the beneficial use sites after each cell is constructed and planted. The NMFS will be responsible for setting up a monitoring plan, but the USCE will coordinate the plan with other State and Federal resource agencies and incorporate their suggestions into the plan, to the extent possible. The NMFS has already established a data baseline for nekton use of natural marshes and seagrass beds in the area and can use these data as a comparison along with control sites in natural marshes to monitor the success of the marshes in the beneficial use sites. After each monitoring cycle, the NMFS will provide recommendations to modify the cells, if needed, to enhance productivity and enable the marshes to become functional equivalents to the natural marshes. Some of the smaller cells may not become functionally equivalent or useful as crane feeding habitat until several cells have been joined to create a larger marsh. This situation cannot be corrected by shortening the disposal interval or increasing the sediment volume because of dredging cycle, pumping distance, and sediment compacting time restrictions.

To further ensure the viability and usefulness of the beneficial use sites for whooping cranes and estuarine species, the USCE will coordinate with State and Federal

resource agencies to set up an Interagency Coordination Team (ICT) during the PED phase. The ICT will evaluate methods the USCE will use in constructing, planting, and monitoring the marshes and provide suggestions for any remedial measures that may be needed to ensure the functional success of the marshes.

In summary, the 50-year disposal plan should prove beneficial to the whooping crane and its designated critical habitat. About 77 percent of the previously lost whooping crane feeding habitat will be replaced with newly created marsh in the beneficial use sites and an inefficient upland disposal site (DA 120) will be replaced, preventing the possibility of future levee failure and burial of valuable crane feeding habitat in Shoalwater Bay. Also, the remaining upland leveed disposal sites will have at least 2 feet of levee freeboard above water ponding levels and more frequent levee inspections to prevent overtopping and levee failure to protect surrounding crane feeding habitat. Maintenance material destined for DA 121, which will soon reach its capacity, will be placed in beneficial use Site A and open-bay DA 122. Although the new upland disposal site will remove some potential upland feeding area that could be used by whooping cranes (small live oak thickets), its major benefit is the elimination of any future levee failures on DA 120 which could destroy much more valuable marsh and seagrass feeding habitat. Several studies and site redesigns under the supervision of an ICT will alleviate concerns of State and Federal resource agencies about the disposal and beneficial uses plan. The ICT will monitor the planning, construction, and planting of the beneficial use sites and make recommendations to correct any deficiencies that may occur. The NMFS will monitor the sites to determine their success in becoming functionally equivalent to natural marshes and make recommendations to correct any problems that may be found.

4.2.5 Vegetation

Salt marsh vegetation near the GIWW will benefit in the long term from the bank erosion protection plan. In the short term, approximately 9-10 acres of marsh vegetation will be directly removed by this plan. The concrete mattresses are placed on top of the existing bank after it has been shaped to provide a smooth slope and covered with a geotextile cloth for a base. Very little excavation is done to the shoreline, except for smoothing the bank surface and digging a shallow trench to bury the top and toe of the mattress. Although a 4-6 foot strip of marsh vegetation is removed along the bank and a 10-14 foot strip of shallow bottom is covered by the mattress during construction, the benefits of the armoring far outweigh the initial impacts to the habitat. This strip of vegetation would have been lost in as few as two years to erosion without armoring, and the mattress will protect the remaining marsh and pond habitat for the whooping cranes to feed in. Furthermore, the armored section is not completely lost to the marsh

ecosystem, because the mattress is composed of connecting concrete blocks with about 15-20 percent open space to allow some new vegetation to grow in between the blocks and benthic infauna and epifauna to colonize the subtidal portions. In addition to saving the natural marsh near the GIWW, marsh vegetation will also benefit from the creation of new marsh in the beneficial use sites over the 50-year period of the disposal plan.

4.2.6 Wildlife Resources

The abundant and diverse wildlife in the study area will benefit from the project protecting the interior marshes from further erosion and from the new marsh created under the beneficial uses plan. Many of the wading and shore birds use the marshes for feeding, sanctuary, and nesting and can be found there in abundance along with mammals and reptiles. These species will benefit from any expansion of their habitat.

4.2.7 Aquatic Resources

The addition of another 1,600 acres of marsh and the protection of at least 64 acres of natural marsh and 1,075 acres of pond habitat in the study area will benefit the estuarine species which are dependent on the marsh (approximately 95 percent of all estuarine species). The additional marsh being created is particularly important since marsh habitat is disappearing all along the Texas coast and may soon impact estuarine productivity. Examples of important commercial and sports species that will benefit from the new marsh habitat include redfish, speckled trout, flounder, croaker, white and brown shrimp, and blue crab, as well as a host of smaller forage species for the aquatic predators.

Aquatic resources dependent on the interior ponds and sloughs in the marshes (crabs, shrimp, and juvenile fish) will also benefit from the erosion protection features of the recommended plan since these open-water, subtidal habitats will be preserved. These habitats are abundant in both the ANWR and the Welder Flats Coastal Preserve. Some small areas of sparse seagrass may be impacted by equipment used to place the mats along the shoreline, but most of these seagrass beds and areas of small oyster patch reefs (10-20 feet in diameter) can be avoided with careful planning to establish access and work corridors. The seagrass beds that are unavoidably destroyed will reestablish once construction is completed.

4.2.8 Threatened and Endangered Species

Except for some temporary impacts during construction, the recommended plan is not expected to adversely impact any of the threatened or endangered species or the

candidate species on the list in Table 4. All construction will take place during the approximately six months when whooping cranes are at their summer breeding grounds, therefore the project will not adversely impact this species. In fact, the project is designed specifically to benefit the whooping crane and will be modified when possible to benefit other endangered species as well.

4.2.8.1 Whale Species

None of the five whale species are likely to wander into shallow coastal estuaries, therefore none are likely to be affected by the proposed armoring project and 50-year disposal plan. All construction will limited to shallow estuarine water or terrestrial habitat along the GIWW.

4.2.8.2 Sea Turtles

The Kemp's ridley and green sea turtles may occur in the small bays in the project area, especially around the oyster reefs and seagrass beds near the mainland and barrier island shorelines. There are no seagrass beds or oyster reefs in the present GIWW. Sea turtles apparently do not frequent the deeper waters of the GIWW (although there is one reported sighting near Sundown Bay) nor do they hibernate there since previous trawl surveys conducted by the NMFS at the request of the USCE in Aransas Bay in 1987 and 1988 captured no sea turtles in the channel. Because of their low abundance in the project area and high mobility, the proposed armoring project and 50-year disposal plan will not adversely affect these endangered species. Both species of turtles may benefit from the proposed armoring work because oysters will settle on the hard substrate of the concrete mats and grout tubes and seagrass will invade quiet waters inside and behind the beneficial use areas. Both habitats will increase the abundance of food sought after by these turtles.

4.2.8.3 Whooping Crane

The proposed armoring project will reduce erosion inside the ANWR by physically protecting the banks along the GIWW from further erosion with a network of articulated concrete blocks. Additional benefits for the cranes accrue from a 50-year disposal plan which will create new wetland (marsh) habitat for the birds with dredged maintenance material at several proposed beneficial use sites (Figure 6) near the most heavily used marshes on Blackjack Peninsula and Welder Flats. Maintenance dredging in the channel and disposal inside the beneficial use sites during the 50-year life of the project will be done during the 6-month period when the birds are at their summer breeding grounds in

WBNP. The newly-created marsh sites will be planted in the fall or the following spring to maximize plant survival. If the cranes are still in the area, marsh borrow sites and transplanting sites will be coordinated with Refuge personnel to avoid disturbing the birds. It is believed the new marsh will be functionally equivalent to the surrounding natural marsh within 2 or 3 years after planting and provide much needed new habitat, especially in the most heavily populated section of the whooping crane's winter range.

Based on erosion control and disposal plans for the recommended armoring alternative, whooping cranes are expected to benefit significantly in the long term through protection of critical habitat and gradual creation of new feeding grounds which may help alleviate crowding in the primary defended territories near Sundown Bay on Blackjack Peninsula.

4.2.8.4 Peregrine Falcon

Peregrine falcons are commonly encountered over the Matagorda-San Jose Island beaches in the study area, but apparently use the Blackjack Peninsula area very little. Only one sighting a month is usually reported in the mainland area during migration by bird watchers (Tom Stehn, pers. comm.). Because the falcons use the marsh area along the GIWW in the Refuge very little and they visit the area only during the winter when construction is prohibited due to the presence of whooping cranes, the recommended armoring project and 50-year disposal plan will not affect this endangered species.

4.2.8.5 Attwater's Greater Prairie Chicken

Suitable habitat for the prairie chicken occurs in the ANWR only in the Tatton Unit located at the upper end of St. Charles Bay. The birds were not located in the area in 1992 or 1993. However, the birds may still reside in the area because one agricultural land owner reported six prairie chickens on the edge of a plowed field in a patch of rye grass about 0.5 miles north of the Tatton Unit in the spring of 1993 (Tom Stehn, pers. comm.). These areas of probable occurrence are at least 8 miles northwest of the recommended construction sites at its closest point and no other suitable habitat is known to occur nearby. Therefore, the armoring project and 50-year disposal plan will not affect this endangered species.

4.2.8.6 Bald Eagle

The closest known eagle nest sites to the study area are two nests in tall trees along the lower Guadalupe River about 23 miles northwest of the GIWW where it crosses Welder

Flats. While eagles may occasionally fly over the ANWR, none have been reported nesting there recently (1-2 pairs had nested there up to 1971), nor is there any suitable nest habitat located along the GIWW in the Refuge. Therefore, the recommended project and 50-year disposal plan will not affect the bald eagle.

4.2.8.7 Brown Pelican

Because pelicans do not nest in or near the GIWW at the Refuge and the adults are highly mobile, the proposed armoring project and 50-year disposal plan will not adversely affect this endangered species. There may be some temporary displacement of the feeding birds due to construction in some areas.

4.2.8.8 Piping Plover

Piping plover have been sighted on Blackjack Peninsula, but there have been no piping plover sightings at the Welder Flats area where armoring is proposed due to the lack of suitable habitat. The marsh bank that will be armored drops vertically to the water and does not have any exposed mud/sand flats.

The only known piping plover site that will be directly impacted by the proposed project as it is now planned is the mainland beach next to the GIWW between Rattlesnake and False Live Oak Islands. However, the birds appear to use this site mostly in February and move to other sites during the rest of their stay in the area (Tom Stehn, pers. comm.). The recommended armoring project as now planned will lay a concrete mattress across the beach to protect the inland marsh and designated critical habitat that is heavily used by whooping cranes. However, the bank erosion protection plan will protect the rest of the known plover sites along the GIWW from eventual erosion. In order to avoid a small adverse impact to a few piping plover caused by removing a small part of their wintering habitat used mostly during one month of the year, an alternative erosion protection plan will be evaluated during the PED phase that uses grout tubes to protect both the beach and interior marshes. Based on these data, the proposed 50-year disposal plan and alternative grout tube protection to be evaluated later should not adversely affect this bird.

4.2.8.9 Jaguarundi and Ocelot

The preferred habitat of these shy cats, dense brush stands, does occur on Blackjack Peninsula in the project area, but not near the GIWW. Refuge personnel have reported no ocelot sightings in the area, but several unverified jaguarundi sightings have been reported on Blackjack Peninsula (Tom Stehn, pers. comm.). Although there were no

sightings or captures during the only scientific survey on the Refuge in 1986, Dr. Michael Tewes can not rule out the possibility of jaguarundis occurring on the Refuge. However, he stated he would be surprised to find any resident populations in the area because there has been no historical documentation of jaguarundi outside the Rio Grande Valley (Dr. Michael Tewes, pers. comm.). Therefore, the proposed armoring project and 50-year disposal plan will not have any impacts on either the ocelot or jaguarundi.

4.2.8.10 Black Lace Cactus

The closest known population of this endemic Texas cactus to the project is about 26 miles west of ANWR in southern Refugio County. Its ideal habitat does not occur near the GIWW where it crosses the whooping crane critical habitat, nor has it ever been located in the Refuge during several botanical surveys (Tom Stehn, pers. comm.). Therefore, the recommended armoring project and 50-year disposal plan will not affect this endangered cactus.

4.2.8.11 Gulf Coast Hog-Nosed Skunk

The Gulf coast hog-nosed skunk has been collected or reported in the literature in or near the ANWR in Aransas (two museum specimens collected in the early 1900's) and San Patricio Counties, but not in Calhoun County. Tom Stehn reports the species is rare in the Refuge, but it has been documented there in 1972 and 1973 (Tom Stehn, pers. comm.). It is very unlikely the skunk would be present along the banks of the GIWW in the Refuge because of the lack of preferred habitat and, therefore, would not be affected by the recommended armoring project and 50-year disposal plan.

4.2.8.12 Aransas Short-Tailed Shrew

All of this shrew's preferred habitat is located in the upland region of the ANWR on Blackjack Peninsula, with none occurring in the marshy areas near the GIWW. Based on the fact that the shrew does not occur near the GIWW, the recommended armoring project and 50-year disposal plan will not affect the Aransas short-tailed shrew.

4.2.8.13 Black-Spotted Newt

The ANWR has many of the small potholes preferred by these salamanders, but surveys by Rappole and Klicka (1991) did not locate any black-spotted newts on the Refuge. Since the newt avoids salt and brackish water pools and there are no freshwater

ponds near the GIWW in the ANWR, the recommended armoring project and 50-year disposal plan will not affect this candidate species (C2).

4.2.8.14 Rio Grande Lesser Siren

Judd (1985) sampled several locations for the siren near the ANWR (Aransas, Calhoun, Refugio, and Victoria Counties) where it has been previously reported, but was unable to capture any specimens in the area. Since ideal habitat in the form of shallow potholes can be found in the ANWR on Blackjack Peninsula, there is a possibility the siren may occur in the Refuge. However, none of these freshwater ponds exist near the GIWW, so the recommended armoring project and 50-year disposal plan will not affect this candidate (C2) species.

4.2.8.15 Gulf Salt Marsh Snake

This water snake is regularly seen in the tidal marshes of the ANWR, especially along San Antonio Bay (McAlister and McAlister, 1987). Since it is likely to occur in the marshes along the GIWW, the recommended armoring project may affect this snake by covering some of its fringing marsh habitat. However, this candidate species will benefit in the long term from the recommended bank erosion protection plan by preventing the future loss of its preferred habitat through wave-induced erosion of the coastal marshes. The 50-year disposal plan may also benefit this species by creating additional marsh habitat for its use.

4.2.8.16 Texas Diamondback Terrapin

In the project area, this candidate species (C2) has been recorded in San Antonio, St. Charles, Copano, Dunham, and Ayres Bays (Mabie, 1988b). Therefore, it is likely to occur at some time in the marsh areas that will be impacted by the recommended armoring project. However, in the long term, the recommended bank erosion protection and 50-year disposal plan should be beneficial to the turtle by protecting the inland marsh habitat (ideal terrapin habitat) from erosion along the GIWW and creating new marsh habitat.

4.2.8.17 Cagle's Map Turtle

There are no river systems with this turtle's required habitat in the ANWR. The closest known occurrence of the species is near Victoria, about 43 miles north of the project area. Therefore, the recommended armoring project and 50-year disposal plan will not have any affect on this candidate species (C2).

4.2.8.18 Texas Horned Lizard

The Texas horned lizard has been recorded on the Tatton Unit of the ANWR, but it is rare on the main part of the refuge on Blackjack Peninsula (Tom Stehn, pers. comm.). The lizard potentially could occur on some of the leveed disposal areas near the GIWW which are periodically disturbed (disposal removes dense vegetation normally occurring there) and have large populations of ants. However, these lizards are unlikely to occur along the marshy banks of the GIWW where construction activities will occur. Therefore, the recommended armoring project and 50-year disposal plan will not affect this candidate species (C2).

4.2.8.19 Audubon's Oriole

The Audubon's oriole has not been recorded at the ANWR (Tom Stehn, pers. comm.). This candidate species (C2) for the Federal list of threatened and endangered species will not be affected by the recommended armoring project and 50-year disposal plan because its preferred habitat does not exist along the GIWW nor does it frequent any of the coastal habitats.

4.2.8.20 Ferruginous Hawk

The ferruginous hawk is a very rare visitor to the ANWR, with only about 10 sightings reported on mainland Blackjack Peninsula (Tom Stehn, pers. comm.). Because the hawk is a rare winter visitor to the Refuge and all construction work is prohibited during the winter while the whooping cranes are occupying the Refuge, the recommended armoring project and 50-year disposal plan will not affect this species.

4.2.8.21 Northern Gray Hawk

The northern gray hawk has not been recorded on the ANWR (Tom Stehn, pers. comm.). Because the hawk does not visit the Refuge and does not have any of its preferred habitat near the GIWW, the recommended armoring project and 50-year disposal plan will not affect this candidate species (C2).

4.2.8.22 Loggerhead Shrike

The loggerhead shrike is fairly common on the ANWR, especially during the winter, where it has been reported in the oak-savannah community and brush on the Tatton Unit (Tom Stehn, pers. comm.). Since its preferred habitat is absent from the construction area

near the GIWW, the recommended armoring project and 50-year disposal plan will not affect this candidate species (C2).

4.2.8.23 Texas Botteri's Sparrow

This sparrow has not been confirmed on Blackjack Peninsula, but there was one report of a sighting in 1989 on the Tatton Unit near Hwy. 35 (Tom Stehn, pers. comm.). Since this very rare visitor to the Refuge has not been reported near the GIWW nor does its preferred habitat occur in the construction area, the recommended armoring project and 50-year disposal plan will not affect this candidate species.

4.2.8.24 Texas Olive Sparrow

The Texas olive sparrow is a rare visitor to the ANWR which appears to avoid the live oak thickets in the mainland area. There have been three sightings on Bludworth Island in thick scrub outside the levees of DA 130B and one sighting on the Heron Flats Trail near the Refuge headquarters (Tom Stehn, pers. comm.). The recommended armoring project and 50-year disposal plan along the GIWW will not affect this candidate species since none of its preferred habitat occurs in the construction area. The dense scrub of Bludworth Island will not be affected by construction.

4.2.8.25 Reddish Egret

This common egret can be found in marshes and ponds of the study area and nests in four local rookeries. Construction activities for the recommended armoring project on the GIWW may temporarily displace any nearby foraging birds, but over the long term, the reddish egret will benefit from the protection of and increase in its feeding habitat (marshes and ponds) afforded by protecting the banks of the GIWW and constructing beneficial use sites in the 50-year disposal plan.

4.2.8.26 White-Faced Ibis

Since this species prefers the interior fresh to brackish marshes and does not frequent salt marshes along the GIWW, the recommended armoring project and 50-year disposal plan will not affect the white-faced ibis. In the long term, the ibis will benefit from erosion control which will protect its preferred habitat located farther inland in the ANWR.

4.2.8.27 Long-Billed Curlew

The recommended armoring project along the GIWW will impact a small part of the curlew's feeding habitat, but the greater part of the bird's preferred habitat will not be affected. In the long term, the curlew will benefit from erosion control which will protect the interior ponds and mudflats from further erosion and from additional marsh created by the 50-year disposal plan.

4.2.8.28 Snowy Plover

As noted for the piping plover (Section 4.2.8.8), the recommended bank erosion protection will only affect one known plover site directly (the beach on the mainland side of the GIWW between Rattlesnake and False Live Oak Islands), but will protect the rest of the known plover sites along the GIWW from eventual erosion. However, an alternative erosion protection plan to be evaluated during the PED phase will protect both the beach and interior marsh. Therefore, the 50-year disposal plan and alternative grout tube plan are not likely to affect this species.

4.2.8.29 Mountain Plover

There have been only a couple of sightings of the mountain plover on the ANWR (Tom Stehn, pers. comm.). Because this plover's preferred habitat does not occur near the GIWW, the recommended armoring project and 50-year disposal plan will not affect this candidate species (C2).

4.2.8.30 Rough-Seed Sea Purslane

Although the occurrence of this plant on the Refuge cannot be ruled out, it is doubtful the plant would occur in the proposed construction area along the GIWW because of the lack of its preferred habitat. Therefore, the recommended armoring project and 50-year disposal plan will not affect this species.

4.2.8.31 Texas Windmill Grass

Although this grass has not been found on the ANWR during any of the botanical surveys, there is a possibility it may occur there since several other species in the genus are there. However, since this species' preferred habitat does not occur in the construction area along the GIWW, the recommended armoring project and 50-year disposal plan will not affect this plant if it does grow on the Refuge.

4.2.8.32 Welder Spiny Aster

This spiny aster has not been reported on the ANWR and, especially, in the wet, saline soils of the marshes along the bays. Therefore, it is not likely to occur along the GIWW in the project area, and the recommended armoring project and 50-year disposal plan will not affect this candidate species (C2).

4.2.8.33 Threeflower Broomweed

Since the preferred habitat of this species (upland grasslands) does not occur within the construction area along the GIWW, the recommended armoring project and 50-year disposal plan will not affect this plant.

4.2.9 Water and Sediment Quality

There will be no meaningful temporary or long-term impacts to water and sediment quality in the study area from construction or maintenance of the recommended plan. The EIS contains the 404(b)(1) evaluation in Appendix B. When the Feasibility Report (with the EIS) is submitted to Congress for authorization, the exemption requirements of Section 404(r) will have been met.

4.2.10 Hazardous, Toxic, and Radioactive Wastes

The bank erosion protection plan and the 50-year disposal plan will not affect any of the existing oil and gas wells. Of the 12 pipeline crossings identified, only six cross the GIWW. Of these six, only one is an oil pipeline, the others being pressurized gas. Neither the bank erosion protection measures nor the beneficial use disposal areas will impact these pipelines. As a result, the probability of encountering hazardous, toxic or radioactive wastes or increased project costs and lost time from discovery, coordination, and remediation of HTRW during construction of the project is considered low.

4.2.11 Historic Resources

No impacts to historic resources are anticipated from shoreline protection measures. Development of beneficial use sites may impact historic sites of undetermined National Register significance. Additional archival research and remote sensing survey will be necessary to specifically locate and identify the structure on or near Bludworth Island, and recorded shipwrecks in the project vicinity. National Register eligible properties identified that will be impacted by the proposed project will either be avoided by project redesign or

mitigated prior to construction. All work will be fully coordinated with the Texas State Historic Preservation Officer and Advisory Council on Historic Preservation as appropriate.

4.2.12 Socioeconomic Resources

Table 8 displays the multiplier effect which shows the initial and projected impact of additional visitor's spending at the ANWR to the counties in terms of generating income and employment. The projection assumes that the Refuge will maintain its ability to attract visitation to its unique recreational opportunities, i.e., to sustain the whooping crane population. While not producing a remedy for the economic ills suffered within the study area, the preservation of whooping crane habitat will act to sustain the area's attempt to develop a tourism industry by protecting the habitat of this unique recreational opportunity.

Table 8
Multiplier Effect of Spending by Visitors to the
Aransas National Wildlife Refuge

Year	Aransas NWR Visitors	Annual Visitor Expenditures ($ millions)	Study Area Income Generated ($ millions)	Employment Generated
1990	76,329	$1.844	$4.714	247
2000	85,000	$2.054	$5.250	275
2010	95,000	$2.292	$5.860	307
2020	106,000	$2.555	$6.532	342
2030	117,500	$2.840	$7.259	380
2040	131,000	$3.156	$8.067	423

4.2.13 Cumulative Impacts

Potential cumulative and long-term impacts of dredging and disposal of sediments from the GIWW in the whooping crane's critical habitat include accidental cargo spills, resuspension of pollutants contained in the sediments during dredging and disposal, erosion of channel banks, and levee failure of upland disposal areas allowing deposited materials to flow over surrounding marsh and seagrass areas (whooping crane feeding

habitat). Other potential long-term effects that could be attributed to the existence of the GIWW is future development or expansion of chemical industries in the area and oil and gas exploration and development. Development or expansion of chemical industries is a potential problem because of the increased possibility for accidental cargo spills from concomitant increases in ship and barge traffic. The GIWW also facilitates oil and gas exploration and development which increases the potential for small accidental spills or even catastrophic spills and fires from a well.

Section 4.2.3 discusses the potential for accidental cargo spills from a collision with other barges or submerged objects and concludes that the probability of a significant spill is very small. Even if a very large increase in traffic occurs with the passage of NAFTA, the probability is still very small even when compared to the scale of a human lifetime. Adding to the low probability of a spill is the fact that the navigation industry is switching over to the use of double-hull barges, especially for hazardous cargoes, which further reduces the potential for a significant spill. The problem with very small fugitive spills (e.g., illegal bilge pumping and discarding used oil and fuel filters overboard) is much more chronic and difficult to detect and quantify. The navigation industry is complying with the new laws and regulations, but the private industry (small shrimp boats and pleasure craft) appears to be more lax in following the law. There are no accurate data showing how much pollution is being released this way and what its long-term effects are. It may take a large public education campaign to make the public aware of the problem and enlist their aid in stopping fugitive releases.

The USCE has taken water and sediment samples before each maintenance dredging project to analyze for a variety of heavy metals and organic compounds that may have been released in the area by accidental spills or fugitive releases. Historical data do not indicate any significant water or sediment quality problem within the project area (USCE, 1989). The heavy metals and organic compounds generally do not exceed EPA water quality criteria, where they exist, and EPA has not identified any criteria for marine sediments. In general, the sediment values for these parameters are below detection limits, with the exception of high oil and grease values discovered in 1984-1985. Apparently, these high values were aberrant or temporary because they have not been found in any subsequent analyses.

Bioassessment studies to determine any bioaccumulation in the usual laboratory test organisms exposed to sediments and tissues of potential whooping crane food items collected in the area by the USCE and USFWS could not find any differences in survival rates of exposed and control test organisms or any high background levels in tissue samples (USCE, 1989; USFWS, 1985). These results indicate that sediments in the study

area are generally free of contaminants and that resuspension of contaminants by dredging is not likely to occur. Also, bioaccumulation has not been found to occur in whooping crane food species and only localized and minor concentrations of a few contaminants have occurred in the past (USFWS, 1993).

Past studies have shown that erosion of the channel banks in the critical habitat is a chronic problem. Section 4.2.2 discusses an erosion protection plan acceptable to the USFWS that will stop erosion of the sensitive and valuable marshes in the area. Furthermore, as part of the 50-year disposal plan, about 1,600 acres of the estimated 2,000 acres of marsh lost since 1939 will be reconstructed by beneficially disposing dredged maintenance material in selected sites adjacent to the GIWW and planting them with Spartina (Section 4.2.4). There are two demonstration sites in place near the ANWR to help determine the best procedures to use in creating the new marshes. As an additional measure to ensure the functional capabilities of the new marsh, an ICT will evaluate the construction methods and results and recommend corrective measures, if needed, to be applied to the marsh in the beneficial use sites.

In addition to the losses of habitat by channel construction and erosion, marshes and productive seagrass beds were impacted on a regular basis by dredged material disposal practices prior to 1974 because all disposal areas were unconfined. After 1974, the USCE started leveeing all the upland disposal areas at the request of the USFWS (USCE, 1989), which reduced the loss of marsh in the area. However, there have been several levee failures at a few locations since 1985 which allowed the confined sediments to spill out over surrounding marsh and seagrass areas. In order to prevent this from recurring, the USCE will maintain levees with at least 2 feet of freeboard above ponded water level and inspect them more frequently.

One long-term concern about the GIWW is the possibility of future industrial development or expansion in the area. The project area is remote from any large population or industrial center and is not likely to be developed because it is designated a critical habitat and protected under the ESA. However, there are some industrial complexes (such as Formosa Plastics) located farther away which could impact the project area through increased barge traffic should they expand. As already explained above, the probability of an accidental significant spill is very low and should decrease even further with the switch to double-hull barges for all hazardous cargoes. The greatest potential traffic hazard located outside, but near, the project area is the intersection of the Matagorda Ship Channel (going up to Lavaca Bay) and the GIWW, which is located about 16 miles northeast of Welder Flats. However, even with the possibility of increased shipping caused by the expansion of Formosa Plastics on Lavaca Bay, there is still only

a very low probability for collision and spill according to a supplemental BA by the EPA (USFWS, 1993).

Another concern for the critical habitat is the potential for increased oil and gas development in the surrounding bays. There are already several producing wells located in Mesquite Bay and lower San Antonio Bay. These sites are sources of concern since an accident could cause a catastrophic spill at any time. Once a spill has occurred in the open bays, containment and clean-up, as described in Section 4.2.3, is very difficult and not always assured. Even the Welder Flats Coastal Preserve, which was established to manage and protect the sensitive and productive aquatic habitat in the area, is not immune to this development. Although the TGLO leased the land to TPWD, it retained the right to use the submerged lands for mineral exploration and development. This potential threat to the wintering habitat and food supply of the whooping crane is beyond the control of this project and is considered the responsibility of the TGLO, especially the sensitive habitat in the Welder Flats Coastal Preserve.

The last potential long-term and cumulative effect that is being investigated by the USFWS and could impact the whooping crane's survival is the withdrawal of freshwater from the Guadalupe drainage system by development inland of the local bay system. San Antonio is expanding and has proposed additional reservoirs on the Guadalupe River and its tributaries which, in addition to the added freshwater needs of industry, will reduce freshwater flow to San Antonio Bay and surrounding marshes. The USFWS fears that as salinity in the area increases beyond about 24 ppt on a regular, continuing basis, the nursery and protective function of marshes for juvenile finfish and shellfish will be reduced resulting in a population decline in whooping crane food items. The USFWS is proposing further studies to predict when freshwater inflow reductions will raise salinities in the marshes sufficiently to threaten the whooping crane's survival by reducing their food supplies and forcing the birds to seek alternative drinking water sources. This potential threat to the whooping crane's survival is outside the boundaries and scope of this study and cannot be corrected by any modification of this project.

4.2.14 Mitigation

This project will provide many benefits to the environment and resident endangered species by preventing erosion of designated critical habitat along the GIWW, creating new marsh for whooping cranes and the local wildlife to use through a separate proposed 50-year disposal plan (beneficial use sites), and provide a spill prevention and containment plan. Therefore, no mitigation will be required as a result of project construction.

4.2.15 Summary

In summary, the recommended armoring project and 50-year disposal plan for the GIWW where it crosses the whooping crane's critical habitat will:

- Prevent erosion of sensitive areas along the banks of the GIWW where it crosses the critical habitat.

- Help prevent collisions by providing mooring points for barges in the Blackjack Peninsula reach (to be evaluated during PED) for use during inclement weather and provide mooring points for spill containment booms as part of an overall spill contingency plan for the area.

- Provide for the beneficial use of dredged maintenance material to recreate about 1,600 acres of marsh along the GIWW.

- Prevent future levee failures on existing upland disposal areas by adding an additional foot of levee freeboard, providing for increased frequency of levee inspections in the project area, and substituting a new upland disposal site outside the critical habitat for DA 120 and 120A. DA 121 is expected to reach its capacity before implementation of the 50-year disposal plan and is not considered part of the new plan.

- Protect wintering habitat of the whooping crane without sacrificing habitat of other threatened and endangered species. Although this project was designed specifically for the benefit of the endangered whooping crane, at least 42 more threatened and endangered species, candidate species for Federal listing, or State-listed species will either benefit from creation of additional marsh land or not be affected by the project.

4.3 ANY ADVERSE ENVIRONMENTAL EFFECTS WHICH CANNOT BE AVOIDED SHOULD THE RECOMMENDED PLAN BE IMPLEMENTED.

Because the USCE has agreed to protect the banks of the GIWW where it passes through designated critical habitat for the endangered whooping crane during Section 7 consultation under the ESA, about 9-10 acres of marsh vegetation will be lost during construction of the concrete mattresses. There is no easy way to avoid this loss which has been coordinated with State and Federal resource agencies. The USFWS has determined

this proposed erosion protection plan is compatible with the purposes of the ANWR (Appendix B, Section 7). If the No Action plan were implemented (no protection of the marsh), the USCE would be in violation of Section 7 of the ESA and potentially subject to lawsuit by environmental groups. However, with the recommended plan, the armoring protection will prevent further erosion of the sensitive marsh along the GIWW. There are no other significant environmental losses associated with the recommended plan.

4.4 ANY IRREVERSIBLE AND IRRETRIEVABLE COMMITMENTS OF RESOURCES INVOLVED IN IMPLEMENTATION OF THE RECOMMENDED PLAN.

The labor, capital, and material resources expended in the planning and construction of this project are irreversible and irretrievable commitments of human, economic, and natural resources. Marsh habitat associated with the erosion protection plan will be irretrievably committed to protect critical feeding areas for the whooping crane. Bay bottom habitat at the beneficial use sites will be irretrievably committed to create more productive tidal marsh habitat.

4.5 RELATIONSHIP BETWEEN LOCAL SHORT-TERM USES OF MAN'S ENVIRONMENT AND THE MAINTENANCE AND ENHANCEMENT OF LONG-TERM PRODUCTIVITY.

The recommended plan and the 50-year disposal plan would eliminate 10 acres of marsh vegetation and over 1,600 acres of bay bottom, respectively, through construction of the project. Productivity associated with these habitats will be permanently removed from the ecosystem. Marsh habitat will be created at the beneficial use sites and these marshes are expected to become established and ecologically functional within three years of planting. Although the productivity increases attributed to the created marsh are expected to far outweigh that of the habitats lost to construction, the interim period between construction and functionality of the created marshes will represent a short-term net loss in productivity. The erosion protection and spill contingency plan and the 50-year disposal plan are expected to provide long-term gains for the critical habitat of the whooping crane.

5.0 CONSISTENCY WITH OTHER STATE AND FEDERAL PLANS

This EIS has been prepared and coordinated in compliance with the National Environmental Policy Act. The recommended plan is in full compliance with all environmental requirements applicable to this stage of the planning process. The following is a brief discussion of the environmental review and consultation requirements applicable to the proposed project.

Fish and Wildlife Coordination Act of 1958, as amended. This Act requires the USCE to coordinate with the USFWS and other resource agencies on project alternatives, the USFWS to prepare an official Fish and Wildlife Coordination Act Report (CAR), and fish and wildlife conservation be given equal consideration with other project goals. The USCE has coordinated with the resource agencies throughout the planning process for this project and the USFWS has submitted Planning Aid Letters to assist in the planning process. A Final Fish and Wildlife CAR is included in Appendix B. That documentation and this EIS constitute compliance with the Act.

The Final CAR includes comments from other resource agencies on the recommended plan, and their concerns for more detailed design information for the beneficial use sites discussed in the 50-year disposal plan. The latter information, however, will not be developed until the Preconstruction Engineering and Design (PED) phase. There are no concerns in the CAR related to the recommended bank protection and spill containment plan.

Although the 50-year disposal plan is not part of the recommended plan, it is an integral part of the overall plan for protecting the critical habitat while maintaining uninterrupted navigation through the area. As a response to the resource agencies concerns for more details on the beneficial use sites, the USCE intends to form an Interagency Coordination Team (ICT) during PED to assist in designing, constructing, planting, and monitoring the sites. The ICT will also assist in designing the monitoring plan and make recommendations for modifying the sites to ensure the success and usefulness of the marshes for wildlife and aquatic resources.

National Wildlife Refuge System Administration Act of 1966. This Act establishes authority for the Secretary of the Interior to permit use of a refuge, "whenever he determines that such uses are compatible with the major purposes for which such areas were established." The recommended armoring and spill containment plan is consistent with the purpose of the Act and with the goals and objectives of the Refuge since they

protect existing wetlands. A compatibility determination for this construction inside the ANWR is enclosed in Appendix B, Section 7. The 50-year disposal plan also benefits the area wildlife by creating additional wetland habitat inside whooping crane critical habitat.

National Historic Preservation Act of 1966, as amended. This Act requires identification of all National Register or eligible properties in the project area and developing mitigation measures for those adversely affected in coordination with the Texas State Historic Preservation Officer (SHPO) and the Advisory Council on Historic Preservation. A historic resource survey and archival research have been conducted and coordinated with the SHPO. No impacts to historic resources are expected as a result of the recommended plan. Additional survey work at the beneficial use sites will be undertaken and coordinated with the SHPO. Any sites found eligible for the National Register that may be impacted by the project will be avoided by project redesign or mitigated.

Coastal Zone Management Act of 1972. This Act encourages States to adopt policies and programs to protect and manage coastal resources. The Department of Commerce may award grants to States to develop management programs and to administer approved programs. In general, federal agencies must comply "to the maximum extent possible" with State management plans. Federal permitees and licensees must demonstrate that their projects comply with State policies and are consistent with the States' management programs. As of the printing date for the Final EIS, the State of Texas does not have an approved coastal management plan. On March 9, 1995, the Governor of the State of Texas withdrew the State's Coastal Management Plan from federal consideration. The State management plan has been revised by State agencies and reviewed and approved by the Coastal Coordination Council. The Council has submitted the plan to the Governor with a recommendation to forward it to the National Oceanic and Atmospheric Administration for acceptance. Although this act is not applicable to the recommended plan at this time, the recommended plan will be reviewed for compliance with any future approved version of the State coastal management plan.

Endangered Species Act of 1973, as amended. This Act requires identification of all Federally-listed threatened or endangered species in the project area and any impacts the project may have on these species. A Biological Assessment of project impacts on threatened, endangered, and candidate species in the area is incorporated in this EIS and has been coordinated with the USFWS and NMFS. The USCE has determined the recommended project will not have any adverse effect on the listed

species. The USFWS and NMFS have concurred with this determination (Appendix B, Section 2).

Clean Water Act of 1977, as amended. Section 404 of the Act applies to the recommended plan and compliance will be achieved under Section 404(r). Section 404(r) provides an exemption from obtaining either a State water quality certificate or a 404 permit if specific requirements are met. These requirements include a discussion based on the Section 404(b)(1) Guidelines in the EIS and submitting that document to Congress before the proposed project is authorized. This EIS contains the necessary evaluation (Appendix B, Section 3) and it will be submitted to Congress for authorization.

Coastal Barrier Improvement Act of 1990. This Act is intended to protect fish and wildlife resources and habitat, prevent loss of human life, and to preclude the expenditure of Federal funds which may induce development in coastal barrier islands and adjacent nearshore areas. The project area is a remote site situated mostly in a national wildlife refuge and State coastal preserve which precludes development. The recommended plan is specifically designed to protect wetland habitat, primarily for an endangered species. Therefore, the recommended project is exempt from prohibitions identified in the Act.

Executive Order 11988, Floodplain Management, May 24, 1977. This Executive Order directs various Federal agencies to evaluate the potential effects of proposed actions on floodplains. Such actions should not be undertaken that directly or indirectly induce growth in the floodplain unless there is no practical alternative. The proposed project will not affect the floodplain along the GIWW in the project area and will not induce further growth in the area since most of the area is inside a national refuge and a State coastal preserve.

Executive Order 11990, Protection of Wetlands, May 24, 1977. This Executive Order directs Federal agencies to avoid undertaking or assisting in new construction located in wetlands unless there is no practical alternative. The recommended plan will result in protection of existing wetlands. These wetlands would have been gradually lost or degraded under without-project conditions. The recommended plan is in full compliance with this Executive Order.

North American Waterfowl Management Plan. The goal of this management plan is to maintain habitat value of designated areas of international significance to waterfowl. It requires public works projects to include provisions to prevent destruction or degradation of waterfowl habitats. The recommended plan is consistent with the management plan since it protects existing wetlands.

Corpus Christi Bay National Estuary Program (CCBNEP). Corpus Christi Bay was included in the National Estuary Program in 1992, setting the stage for four years work by a "Management Conference" of Governor/Federal appointees to the CCBNEP. These appointees represent diverse State and Federal resource agencies, industries, universities, environmental organizations, bay stakeholders, and the public. The USCE serves on this key committee overseeing the management planning. The CCBNEP has begun its work to draft a Comprehensive Conservation and Management Plan (CCMP) as authorized under the Clean Water Act. The process of drafting the CCMP and the plan itself will have implications for development and implementation of the Recommended Plan. The USCE will review the recommended plan for consistency with the CCMP as it develops.

6.0 PUBLIC INVOLVEMENT, REVIEW, AND CONSULTATION

6.1 PUBLIC INVOLVEMENT PROGRAM

6.1.1 Reconnaissance Phase

Public involvement began with the publication of a Public Notice on June 13, 1989 which requested input on operational problems and needs of the Texas section of the GIWW. Also requested was information associated with potential modifications of the waterway which could improve overall quality of the environment. Comments were received from several environmental groups and individuals which identified a variety of issues and concerns. The USFWS, TPWD, TGLO, Texas Department of Transportation (the project local sponsor), NMFS, and NAS also provided information on specific problems and needs and presented recommendations for further evaluation. This was used to establish a list of problems along the Aransas section of the GIWW which required examination.

This initial effort culminated in the preparation of a report titled Gulf Intracoastal Waterway, Texas, Section 216, Reconnaissance Report, dated November 1989. That report presented an initial appraisal of the entire Texas section of the GIWW and reconnaissance level studies of the Sargent Beach and ANWR reaches. Findings of this report recommended that the study for ANWR be continued into the feasibility phase.

6.1.2 Feasibility Phase

This phase was initiated with publication of a Public Notice on August 30, 1990 which presented a summary of past and planned study activities for the GIWW at ANWR. It also discussed the study process, the specific problems at ANWR, and various alternatives to be investigated. The notice also invited all interested parties to provide input to the study. A second Public Notice dated June 24, 1993 provided a summary of activities for the study at ANWR and requested public input to the scoping process for preparation of an EIS. This notice invited all interested persons to a public scoping meeting which was held on July 21, 1993 in Rockport, Texas. A Notice of Intent to prepare a Draft EIS was published in the Federal Register on October 28, 1992 which summarized the alternatives being evaluated and described the scoping process and coordination efforts.

Three agency scoping meetings were held on November 18, 1992, May 13, 1993, and August 9, 1994 to gather additional agency input on the feasibility studies. Preliminary studies and meetings with the USFWS, including personnel from the ANWR, provided guidance in developing plans that would minimize impacts to sensitive habitats in the project area. The USFWS prepared a Final Fish and Wildlife Coordination Act Report that was coordinated with the TPWD and NMFS (Appendix B). The resource agencies evaluated the potential environmental impacts associated with the alternative plans and had no concerns about the recommended plan. Agency concerns about details for the beneficial use sites in the 50-year disposal plan will be addressed by forming an ICT to review and make recommendations on locating, constructing, filling, planting, and monitoring the sites.

6.2 PUBLIC VIEWS AND RESPONSES

Public views and concerns expressed during this study have been considered during the preparation of this Final EIS. The views and concerns were used to develop planning objectives, identify significant resources, evaluate impacts of various alternatives, and identify a plan that is socially and environmentally acceptable. The overall objective of this study is to maintain the GIWW through the ANWR without interrupting navigation traffic while preventing erosion of critical habitat for an endangered species. The primary concern expressed was the past and continuing loss of marsh in the critical habitat. Other important concerns included potential catastrophic loss of whooping cranes through a collision and toxic spill of commercial cargos, levee failures of contained upland disposal sites along the GIWW, and disposal of dredged maintenance material inside the critical habitat.

Development of alternatives to address the objectives, views, and concerns resulted in identifying two basic concepts. These included retaining the existing alignment with bank erosion protection and a 50-year disposal plan, and three basic channel realignment alternatives, including some minor variations of two of the primary alternatives. Some alternatives were eliminated based on cost effectiveness and their inadequacy to meet various agency and public concerns. The recommended plan meets the expressed objectives, views, and concerns of the resource agencies and public. A study schedule for this project was established in an effort to implement a solution as early as possible.

6.3 STATEMENT RECIPIENTS

The Draft Feasibility Report and EIS were circulated to all known interested Federal, State, and local agencies and interested organizations and individuals with a request to

review and provide comments on these documents. Those agencies, organizations, and individuals who commented on the Draft EIS are listed below. All comments on the Draft EIS are included in Appendix B, Section 8. As required by the Council on Environmental Quality (CEQ) regulations, these comments have been answered individually and have been considered fully while preparing the Final Feasibility Report and EIS.

U.S. Department of the Interior
U.S. Department of Commerce
U.S. Environmental Protection Agency
U.S. Coast Guard
Texas Parks and Wildlife Department
Texas General Land Office
Texas Department of Transportation
Gulf Intracoastal Canal Association
The Port of Port Lavaca - Point Comfort
Mr. W.H. Bauer

6.4 REVIEW OF DRAFT ENVIRONMENTAL IMPACT STATEMENT

The Draft EIS was filed with the Office of Federal Activities, Environmental Protection Agency and a notice published in the Federal Register dated June 2, 1995 to initiate the formal 45 day review period. Comments were received from various Federal and State agencies, business interests, and individuals. A majority of the comments received expressed support for the selected plan, but had some reservations about details for developing the beneficial use sites in the 50-year dredged material disposal plan. This plan is not part of the selected plan being recommended to Congress for authorization. However, an ICT composed of members of appropriate Federal and State resource agencies will be formed to address these concerns and make recommendations on size, location, construction, filling, planting, and monitoring of the sites for the 50-year disposal plan. Other concerns about the erosion control plan include: (1) effects on circulation in Sundown Bay, (2) USCE investigation of alternative methods of erosion control, (3) USCE discussion of the Welder Flats Coastal Preserve, and (4) the high costs associated with the selected plan. One other concern about the 50-year disposal plan was the need for a new upland disposal site on private land to replace an upland disposal area that will soon reach its capacity.

All comments on the Draft EIS have been answered and can be found in Appendix B, Section 8. The Final Feasibility Report and EIS are being circulated for a final 30 day review and then will be submitted to Congress for appropriate action.

7.0 LIST OF PREPARERS

Terrell W. Roberts, Ph.D. - Wildlife Biologist.

Experience: 9 years environmental, threatened and endangered species impact analysis, Galveston District. 5 years fishery research, National Marine Fisheries Service. 4 years Asst Professor of Oceanography, Florida Institute of Technology. 5 years oceanography research, Texas A&M University.

EIS Role: Overall preparation of the document, environmental impact analysis, biological assessment and impact analysis for threatened and endangered species, and coordination of project with natural resource agencies.

Ms. Carol A. Hollaway - Social Scientist.

Experience: 19 years socioeconomic impact analysis and economic and financial analysis, Galveston District.

EIS Role: Socioeconomic impact analysis.

Mr. Richard Medina - Chief, Environmental Resources Branch.

Experience: 22 years environmental effects of dredging and water and sediment quality analysis, Galveston District.

EIS Role: Project formulation and coordination. Reviewed and edited EIS.

Ms. Kristy L. Morten - Environmental Specialist.

Experience: 4 years hazardous, toxic, and radioactive wastes and water quality environmental assessments and impact analysis, Galveston District. 12 years water quality and waste research and analysis, and regulatory implementation, Angelina & Neches River Authority.

EIS Role: Preparation of hazardous, toxic, and radioactive waste impact analysis.

Ms. Carolyn Murphy - Historic Resources.

Experience: 17 years historic resource coordination and archeological survey and research work at Omaha and Galveston Districts. 2 years research and survey work at the University of Texas.

EIS Role: Preparation of historic resource impact analysis and coordination with the Texas State Historic Preservation Officer.

Mr. David J. Petit - Environmental Specialist.

Experience: 22 years environmental impact analysis, Galveston District.

EIS Role: Scoping and public involvement.

Ms. Sheridan S. Willey - Civil Engineer.

Experience: 8 years coastal planning, Los Angeles and Galveston Districts.

EIS Role: Developed general project information and provided engineering data on the recommended and alternative project plans.

8.0 REFERENCES, ABBREVIATIONS, AND INDEX

8.1 REFERENCES

Belardo, S., S. Williams, and F. P. Ward. 1978. The spring return of peregrine falcons to Padre Island: Results of 1978 survey. Chihuahuan Desert Research Institute, Contribution No. 42, 14 p.

Bustard, R. 1973. Sea Turtles: Natural History and Conservation. Collins, London.

Chapman, S. S. and B. R. Chapman. 1989. Status survey of the Aransas short-tailed shrew (Blarina hylophaga plumbea). Prepared for USFWS, Ecological Services Office, Corpus Christi, Texas. 32 pp.

Conant, R. 1975. A field guide to reptiles and amphibians of eastern and central North America. Houghton Mifflin Co., Boston, 429 p.

Correll, D. S. and H. B. Correll. 1975. Aquatic and wetland plants of southwestern United States. vols. I and II. Stanford University Press. Stanford, California. 1777 pp.

_____ and M. C. Johnston. 1970. Manual of vascular plants of Texas. Contributions from Texas Research Foundation. vol. 6. Renner, Texas. 1881 pp.

Davis, W. B. 1974. The Mammals of Texas. Bull. 41, Texas Parks and Wildlife Department, Austin, TX. 294 pp.

Dragoo, J. W., G. D. Baumgardner, D. B. Fagre, and D. J. Schmidly. 1988. Status survey of the Gulf Coast hog-nosed skunk (Conepatus leuconotus) in south Texas. Contract study prepared for Texas Parks and Wildlife Department, Austin, TX.

Dugoni, J. A. 1980. Habitat utilization, food habits, and productivity of nesting southern bald eagles in Louisiana. M.S. Thesis. Louisiana State University, Baton Rouge, LA. 151 pp.

Ernst, C. H. and R. W. Barbour, 1973. Turtles of the United States. University Press of Kentucky.

Federal Register. 1979. Endangered Species Determinations for Echinocereus lloydii (Lloyd's hedgehog cactus) and Echinocereus reichenbachii var. albertii (Black lace cactus). 50 CFR Part 17, Vol. 44, No. 209: 61916-61920.

_____. 1983. Proposed reclassification of the peregrine falcons in North America. 50 CFR Part 17, Vol. 48, No. 41: 8796-8802.

_____. 1984. Endangered and threatened wildlife and plants; Piping plover proposed as an endangered and threatened species. 50 CFR Part 17, Vol. 49, No. 218: 44712-44715.

_____. 1985. Endangered and threatened wildlife and plants; Determination of endangered and threatened status for the piping plover. 50 CFR Part 17, Vol. 50, No. 238: 50726-50733.

_____. 1992. Availability of draft recovery plan (first version) for the Attwater's Prairie Chicken for review and comment. Vol. 57, No. 69: 12333-12334.

_____. 1993a. Endangered and threatened wildlife and plants; Establishment of an experimental nonessential population of whooping cranes in Florida. 50 CFR Part 17, Vol. 58, No. 13: 5647-5657.

_____. 1993b. Endangered and threatened wildlife and plants; Notice of 12-month finding on petition to list Cagle's Map Turtle. 50 CFR Part 17, Vol. 58, No. 13: 5701-5704.

_____. 1993c. Endangered and threatened wildlife and plants; Determination of threatened status for the Pacific coast population of the western snowy plover. 50 CFR Part 17, Vol. 58, No. 42: 12864-12874.

Gould, F.W. 1975. Texas plants--a checklist and ecological summary. Texas Agricul. Exper. Sta., Texas A&M Univ., College Station, Texas. 121 p.

Haig, S. M. 1987. Winter distribution and status of piping plovers on the Gulf of Mexico. Presented at Canadian Wildlife Service Symposium on Prairie Endangered Species.

_____. 1992. The Piping Plover (Charadrius melodus). In: Birds of North America, No. 2. A. Poole, P. Stettenheim, and F. Gill (eds.), The American Ornithologist's Union. Philadelphia, PA. pp. 1-18.

_____ and L. W. Oring. 1985. Distribution and status of the piping plover throughout the annual cycle. J. Field Ornithol., 56(4): 334-345.

_____ and _____. 1988. Distribution and dispersal in the piping plover. The Auk 105: 630-638.

_____. and J. H. Plissner. 1993. Distribution and abundance of piping plovers: results and implications of the 1991 international census. The Condor 95: 145-156.

Hancock, J. and J. Kushlan. 1985. The Herons Handbook. Harper and Row, Publishers, New York.

Hall, E. R. 1981. Mammals of North America. John Wiley and Sons, NY.

Hildebrand, H. 1980. A historical review of the status of sea turtle population in the western Gulf of Mexico. Given at World Conference on Sea Turtle Conservation, 26-30 Nov. Wash. D.C. 14 p.

Hitchcock, A. S. 1950. Manual of the grasses of the United States. U.S. Dept. of Agriculture, Misc. Publ. No. 200, Wash. D.C. 1051 pp.

Hunt, W. G., B. S. Johnson, and F. P. Ward. 1979. Spring passage of arctic peregrine falcons at Padre Island: A migration and habitat study using radio telemetry. Chihuahuan Desert Research Institute, Contribution No. 60, 14 p.

Isley, L. D. 1983. Successful nesting of bald eagles at Robert S. Kerr reservoir, Oklahoma. U.S. Army Corps of Engineers, Wildl. Res. Notes, Information Exch. Bull. 1 (3): 2.

Jasikoff, T. M. 1982. Habitat suitability index models: Ferruginous hawk. U.S.D.I. Fish and Wildlife Service. FWS/OBS-82/10.10. 18 pp.

Johnson, C. M. and G. A. Baldassarre. 1988. Aspects of the wintering ecology of piping plovers in coastal Alabama. Wilson Bull. 100(2): 214-223.

Jones, F. B. 1977. Flora of the Texas Coastal Bend. Welder Wildlife Foundation Contribution B-6. Mission Press, Corpus Christi, Texas. 262 pp.

Judd, F. W. 1985. Status of Siren intermedia texana, Notophthalmus meridionalis and Crotaphytus reticulatus. Final report to the Office of Endangered Species, USFWS. Cooperative Agreement No. 14-16-0002-81-923, Modification No. 1. 60 pp.

Jurries, R. W. 1979. Attwater's Prairie Chicken. F.A. Series No. 18, Texas Parks and Wildlife Department, Austin, Texas.

Killebrew, F. C. 1991. A petition for threatened status listing of Graptemys caglei (Testudines, Emydidae). Letter to U.S. Fish and Wildlife Service, Corpus Christi Ecological Services Field Office. April 8, 1991, 15 pp.

King, K. A., E. L. Flickinger, and H. H. Hildebrand. 1977. The decline of brown pelicans on the Louisiana and Texas Gulf coast. Southwest. Nat. 2(4): 417-431.

Klicka, J. T. and J. H. Rappole. 1989. Ecology, distribution, and abundance of the black-spotted newt. Annual Report 1988-1989, Caesar Kleberg Wildlife Research Institute, p. 33-34.

Mabie, D. W. 1988a. Bald Eagle Survey. Texas Parks and Wildlife Department, Fed. Aid Proj. No. W-103-R-18, Job No. 30. 12 pp.

_____. 1988b. Texas diamondback terrapin study (1984-1987). Special Report, Texas Parks and Wildlife Department, Austin, Texas.

Maechtle, T. L. 1987. Migratory peregrine falcon survey, Playa del Rio property, near Brownsville, Texas; Spring 1987. Unpublished Manuscript prepared for U.S. Army, Corps of Engineers, 8 p.

McAlister, W. H. 1988. An annotated list of the plants of the Aransas National Wildlife Refuge. 66 pp.

_____ and M. K. McAlister. 1987. Guidebook to the Aransas National Wildlife Refuge. Mince Country Press. Victoria, Texas. 298 pp.

McEwan, L. C. and D. H. Hirth. 1979. Southern bald eagle productivity and nest site selection. J. Wildl. Manage. 43: 585-594.

Melvin, S. M., C. R. Griffin, and L. H. MacIvor. 1991. Recovery strategies for piping plovers in managed coastal landscapes. Coastal Management 19: 21-34.

Minerals Management Service (MMS). 1993. Gulf of Mexico Sales 147 and 150: Central and Western Planning Areas, Final Environmental Impact Statement. Volume I: Sections I-IV C. U.S. Department of the Interior, MMS, Gulf of Mexico OCS Region (MMS 93-0065).

Morgan, D. R. 1993. A molecular systematic study and taxonomic revision of Psilactis (Asteraceae: Astereae). Systematic Botany 18(2): 290-308.

Murphy, T. M., et al. 1984. Southeastern States Bald Eagle Recovery Plan. U.S. Fish and Wildlife Service: Southeast Region, Atlanta.

Nelson, D. A. 1986. Life history and environmental requirements of loggerhead sea turtles. U.S. Army, Corps of Engineers, Waterways Experiment Station, Environmental Impact Research Program, Tech. Rep. EL-86-2.

Nicholls, J. L. and G. A. Baldassarre. 1990a. Winter distribution of piping plovers along the Atlantic and Gulf coasts of the United States. Wilson Bull., 102(3): 400-412.

_____ and _____. 1990b. Habitat associations of piping plovers wintering in the United States. Wilson Bull., 102(4): 581-590.

Oberholser, H. C., E. B. Kincaid, Jr., and L. A. Fuertes. 1974. The bird life of Texas. University of Texas Press, Austin, Texas, 1069 p.

Palmer, R. S. (ed.) 1962. Handbook of North American Birds, Vol. I: Loons through Flamingos. Yale University Press, New Haven, Conn.

Palmer, W. M. and C. L. Cordes. 1988. Habitat Suitability Index Models: Diamondback Terrapin (Nesting) - Atlantic Coast. U.S. Fish and Wildlife Service Biol. Rep. 82(10.151). 18 pp.

Paul, R. T. 1977. History and current status of reddish egrets in the United States. Proc. 1977 Colonial Waterbird Group Conf. 2: 179-184.

Price, A. H. 1990. Phrynosoma cornutum (Harlan), Texas homed lizard. Catalogue of American Amphibians and Reptiles, pp. 469.1-469.7. By The Society for the Study of Amphibians and Reptiles.

Rabalais, S. C. and N. N. Rabalais. 1980. The occurrence of sea turtles on the South Texas coast. Contributions in Marine Science, 23: 123-129.

Rappole, J. H. and A. R. Tipton. 1987. An assessment of potentially endangered mammals of Texas. Final Report to USFWS, Office of Endangered Species, Albuquerque, N.M. 167 pp.

_____. and J. Klicka. 1991. Status of the black-spotted newt (Notophthalmus meridionalis) in Texas and Mexico. A report to the USFWS, Contract No. 14-16-0002-86927, Amendment No. 4, 74 pp.

Riddle, K. E. 1982. Survey of migratory peregrines on North and South Padre Island, Texas; Spring 1982 and Fall 1982. Unpublished Manuscript prepared for U.S. Fish and Wildlife Service, 21 p.

Robertson, S., T. Stehn, and J. Magera. 1993. Oil spill contingency plan for Aransas National Wildlife Refuge, Texas. U.S. Fish and Wildlife Service, Region 2, Albuquerque, NM.

Rozas, L. P., T. J. Minello, R. Burditt, S. Whaley, J. Boyd, M. Pattillo, and T. Baumer. 1994. Comparison of estuarine habitat utilization by nekton at Aransas National Wildlife Refuge. Final Report to the Galveston District, U.S. Army Corps of Engineers, Galveston, Texas.

Ryan, M. R. (Manuscript) Presentation at a "Workshop for the conservation of threatened shorebirds." Presented at: The Blucher Institute, Corpus Christi, Texas on February 11, 1994. Unpublished Manuscript.

_____, B. G. Root, and P. M. Mayer. 1993. Status of piping plovers in the Great Plains of North America: A demographic simulation model. Conservation Biol. 7: 581-585.

Schreiber, R. W. 1980. The brown pelican: an endangered species? BioScience 30(11): 742-747.

Schmidly, D. J. and S. H. Shane. 1978. A Biological Assessment of the Cetacean Fauna of the Texas Coast. Report No. MMC-74/05. Prepared for the U.S. Marine Mammal Commission.

Sherrod, H. L. and R. Medina. 1992. Whooping crane habitat alteration analysis at Aransas National Wildlife Refuge, Texas. P. 87-99 in D. A. Word (ed.), Proc. 1988 North American Crane Workshop. State of Florida Game and Freshwater Fish Commission, Tallahassee.

Simons, T., S. K. Sherrod, M. W. Collopy, and M. A. Jenkins. 1988. Restoring the bald eagle. Amer. Scient. 76: 253-260.

Smith, J. C. 1981. Bald Eagle Survey. Texas Parks and Wildlife Department, Fed. Aid Proj. No. W-103-R-11, Job No. 30. 4 pp.

Snow, C. 1973. Habitat management series for endangered species. Rep. 5. Southern bald eagle and northern bald eagle. U.S.D.I., Bur. Land Manage., Portland, Or. 58 pp.

Stehn, T. V. 1987. Impacts of the Gulf Intracoastal Waterway on the endangered whooping crane. Unpublished Report, USFWS, Austwell, Texas. 13 pp.

_____ and E. F. Johnson. 1987. Distribution of winter territories of whooping cranes on the Texas coast. In: Proceedings 1985 Crane Workshop, J.C. Lewis (ed.), Grand Island, NE, pp. 180-195.

Tennant, A. 1985. A Field Guide to Texas Snakes. Texas Monthly Press.

Tewes, M. E. and D. D. Everett. 1986. Status and distribution of the endangered ocelot and jaguarundi in Texas. Pp. 147-158, In: Cats of the World: Biology, Conservation, and Management (S. D. Miller and D. D. Everett, eds.). National Wildlife Federation, Wash., D.C. 501 pp.

_____ and S. D. Miller. 1987. Future research for the endangered ocelot population of the United States. Pp. 164-166. In: Proc. 3rd Southeastern Nongame and Endangered Wildlife Symp. (R. R. Odom, K. A. Riddleberger, and J. C. Ozier, (eds.). Georgia Department of Natural Resources, Athens, GA. 253 pp.

_____. and D. J. Schmidly. 1987. The neotropical felids: jaguar, ocelot, margay, and jaguarundi. In: Wild Furbearer Management and Conservation in North America (M. Novak, J. Baker, M. Obbard, and B. Malloch, eds.). Ontario Ministry of Natural Resources, Toronto. 1,150 pp.

Texas Colonial Waterbird Society. 1992. Draft - Texas coastal waterbird colonies: 1973-1990, census summary, atlas, and trends. Prepared for Texas Colonial Waterbird Society, USFWS, and TPWD by M. L. Lange, USFWS, Angleton, Texas.

Texas Organization for Endangered Species (TOES). 1994. TOES News & Notes, Spring 1994:10.

Texas Parks and Wildlife Department (TPWD). 1984. Nongame wildlife investigations. Brown pelican study. Federal Aid Project W-103-R-14, Job 41. Austin, Texas.

_____. 1992. Attwater's Prairie Chicken Restoration. Federal Aid Project W-125-R-3, Job 63. Austin, Texas.

U.S. Army Corps of Engineers (USCE). 1989. Biological assessment for impacts to endangered and threatened species - Maintenance dredging Gulf Intracoastal Waterway, Texas (Stations 698+000 - 860+000) and Channel to Victoria (Stations 0+00 - 180+00), May 1989. U.S. Army Engineer District, Galveston, Texas.

_____. 1992. Spill contingency and prevention plan for the Gulf Intracoastal Waterway at the Aransas National Wildlife Refuge. Prepared by Gulf Engineers & Consultants, Inc. Baton Rouge, LA.

U.S. Fish and Wildlife Service (USFWS). 1980a. Selected vertebrate endangered species of the seacoast of the United States - Leatherback Sea Turtle. Biological Services Program, FWS/OBS - 80/01.12, 7 p.

_____. 1980b. Selected vertebrate endangered species of the seacoast of the United States - Green Sea Turtle. Biological Services Program, FWS/OBS-80/01.13, 9 p.

_____. 1980c. Selected vertebrate endangered species of the seacoast of the United States - Hawksbill Turtle. Biological Services Program, FWS/OBS - 80/01.22, 6 p.

_____. 1980d. Selected vertebrate endangered species of the seacoast of the United States - Kemp's (Atlantic) Ridley Sea Turtle. Biological Services Program, FWS/OBS- 80/01.30. 7 p.

_____. 1980e. Selected vertebrate endangered species of the seacoast of the United States - Brown Pelican, Eastern and California Subspecies. Biological Services Program, FWS/OBS- 80/01.40, 16 p.

_____. 1980f. Selected vertebrate endangered species of the seacoast of the United States - Arctic Peregrine Falcon. Biological Services Program, FWS/OBS 80/01.51, 9 p.

_____. 1982a. Peregrine Falcon Recovery Plan (Alaska Population). Prepared in cooperation with the Alaska Peregrine Falcon Recovery Team. USFWS, Denver, CO.

_____. 1982b. Marine birds of the southeastern United States and Gulf of Mexico, Part I: Gaviiformes through Pelicaniformes. Biological Services Program, FWS/OBS-82/01, 637 p.

_____. 1984a. American Peregrine Falcon Recovery Plan (Rocky Mountain/Southwest Population). Prepared in cooperation with the American Peregrine Falcon Recovery Team. USFWS, Denver, CO.

_____. 1984b. Listing proposed for four animals: piping plover. Endangered Species Technical Bulletin, Vol. IX, No. 12: 4-5.

_____. 1985. Brown pelicans in southeastern U.S. delisted after recovering from effects of DDT. Endangered Species Technical Bulletin Vol. X, No. 3.

_____. 1986a. Whooping Crane Recovery Plan. U.S. Fish and Wildlife Service, Albuquerque, New Mexico. vi + 283 pp.

_____. 1986b. Black Lace Cactus (Echinocereus reichenbachii var. U.S. Fish and Wildlife Service, Albuquerque, NM. 51 pp.

_____. 1988. Great Lakes and northern Great Plains piping plover recover plan. U.S. Fish and Wildlife Service, Twin Cities, MN. 160 pp.

_____. 1990. Listed cats of Texas and Arizona recovery plan (with emphasis on the ocelot). U.S. Fish and Wildlife Service, Albuquerque, NM. 131 pp.

_____. 1991. First Update Of Peregrine Falcon (Falco peregrinus), Eastern Population, Revised Recovery Plan. Newton Corner, MA. 35 pp.

_____. 1992. Attwater's Prairie Chicken Recovery Plan. Albuquerque, NM. 48 pp.

_____. 1993. Final biological opinion on the indirect effects of erosion associated with the existence of the Gulf Intracoastal Waterway (GIWW) upon the whooping crane critical habitat. Consultation No. 2-11-89-F-77. USFWS, Ecological Services, Corpus Christi, Texas.

_____. 1994. Whooping Crane Recovery Plan. USFWS, Albuquerque, NM. 92 pp.

Watkins, M. A. 1989. Bald eagles nest at Clinton Lake, Kansas. U.S. Army Corps of Engineers, Wildl. Res. Notes, Information Exch. Bull. 7(2): 1-2.

8.2 LIST OF ABBREVIATIONS

ANWR	Aransas National Wildlife Refuge
BA	Biological Assessment
BO	Biological Opinion
CAR	Fish and Wildlife Coordination Act Report
CCBNEP	Corpus Christi Bay National Estuary Program
CCMP	Comprehensive Conservation and Management Plan
CEQ	Council on Environmental Quality
CFR	Code of Federal Regulation
CWS	Canadian Wildlife Service
DA	Disposal Area
EIS	Environmental Impact Statement
EPA	Environmental Protection Agency
ER	Engineering Regulation
ESA	Endangered Species Act
F	Fahrenheit
FY	Fiscal Year (Federal Government)
GIWW	Gulf Intracoastal Waterway
HQUSACE	Headquarters, U.S. Army Corps of Engineers
HTRW	Hazardous, Toxic, and Radioactive Wastes
ICT	Interagency Coordination Team
IWR	Institute for Water Resources
MLT	Mean Low Tide
MOU	Memorandum of Understanding
NAFTA	North American Free Trade Agreement
NAS	National Audubon Society
NED	National Economic Development
NEPA	National Environmental Policy Act
NMFS	National Marine Fisheries Service
O&M	Operations and Maintenance
OMRR&R	Operations, Maintenance, Repair, Replacement, and Rehabilitation
PPT	Parts Per Thousand
PED	Preconstruction Engineering and Design
SHPO	Texas State Historic Preservation Officer
TGLO	Texas General Land Office
TPWD	Texas Parks and Wildlife Department
TNRCC	Texas Natural Resource Conservation Commission
USCE	U. S. Army Corps of Engineers
USFWS	U. S. Fish and Wildlife Service
WBNP	Wood Buffalo National Park

8.3 INDEX

Subjects	Environmental Impact Statement	Feasibility Report
Affected Environment	3-1	13
Alternatives	2-1	42,55
Areas of Controversy	iv	-
Comparative Impacts of Alternatives	2-15	83
Environmental Conditions	3-1	13
Environmental Consequences	4-1	108
List of Preparers	7-1	-
Major Conclusions and Findings	ii	115
Need for and Objectives of Action	1-1	33
Mitigation	2-5,4-28	68,83
Planning Objectives	1-21	33
Plans Considered in Detail	2-15	83
Plans Eliminated From Further Study	2-15	55,68,90
Public Concerns	1-20	114
Public Involvement	6-1	114
Public Involvement Program	6-1	114
Public Views and Responses	6-2, App B, Sec 8	114
Relation to Environmental Requirements	iv,5-1	36
Required Coordination	5-1	6,114
Significant Resources	3-4	108
Vegetation	3-5	108
Wildlife Resources	3-7	108
Aquatic Resources	3-7	108
Threatened and Endangered Species	3-9	109
Water and Sediment Quality	3-37	-
Hazardous, Toxic, and Radioactive Wastes	3-38	110
Historic Resources	3-38	110
Socioeconomic Resources	3-39	110
Statement Recipients	6-2	-
State Authority	-	113
Statutory	1-1	3
Table of Contents	v	i
Unresolved Issues	iv	-
Without Conditions (No Action)	2-3,2-15,4-1	39