FED.RD. DIV.NO.	PROJECT NO.		SHEET NO.
6	CD2452-1-35		1
STATE	STATE DIST.NO.	COUNTY	
TEXAS	15	BEXAR	
CONT.	SECT.	JOB	HIGHWAY NO.
2452	01	035	LP 1604

TEXAS DEPARTMENT OF TRANSPORTATION

PLANS OF PROPOSED STATE HIGHWAY IMPROVEMENT

BEXAR COUNTY - LOOP 1604

PROJECT NO. CD2452-1-35

FROM 1.9 KM SOUTH OF SH 16 TO 1.1 KM NORTH OF FM 471

ROADWAY LENGTH = 4667.40 M = 4.6674 KM
BRIDGE LENGTH = 72.60 M = 0.0726 KM
TOTAL LENGTH = 4740.00 M = 4.7400 KM

FOR CONSTRUCTION OF THE WIDENING OF A NON-FREEWAY FACILITY CONSISTING OF GRADING, STRUCTURES, BASE AND SURFACE

FINAL PLANS

LETTING DATE: 8-6-97
DATE CONTRACTOR BEGAN WORK: 10-29-97
DATE WORK WAS ACCEPTED: 9-1-99
FINAL CONTRACT COST: 6071404.91
CONTRACTOR: HUNTER INDUSTRIES

DESIGN SPEED :
MAINLANES = 110 KM/H
FRONT. RD = 80 KM/H

AREA OF DISTURBED SOIL = 33 HA

INDEX OF SHEETS

SHEET NO.	DESCRIPTION

(SEE SHEET 2 FOR SHEET INDEX)

BEGIN PROJECT
STA. 9+760.00
CONTROL: 2452-01-035
REF. MKR. = 26.517

END PROJECT
STA. 14+500.00
CONTROL: 2452-01-035
REF. MKR. = 23.681

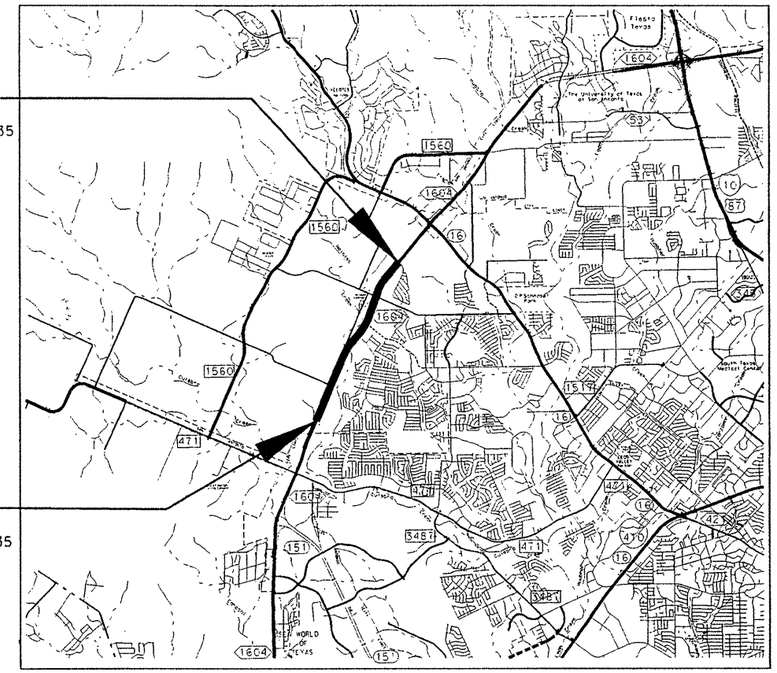

LAYOUT SCALE 1:1000

NO EQUATIONS
NO EXCEPTIONS
NO RAILROADS

PLANS PREPARED BY:
Kimley-Horn and Associates, Inc.

BEXAR
CD 2452-1-35

STATE OF TEXAS
BRENT L. CHRISTIAN
73921
REGISTERED PROFESSIONAL ENGINEER

Brent L. Christian
4-15-97

THE STANDARD SHEETS SPECIFICALLY IDENTIFIED ON THE NEXT SHEET HAVE BEEN SELECTED BY ME OR UNDER MY RESPONSIBLE SUPERVISION AS BEING APPLICABLE TO THIS PROJECT.

Brent L. Christian PE 4-15-97
DATE

SPECIFICATIONS ADOPTED BY THE TEXAS DEPARTMENT OF TRANSPORTATION, MARCH 1, 1995 AND SPECIFICATION ITEMS LISTED AND DATED AS FOLLOWS, SHALL GOVERN ON THIS PROJECT: SPECIAL LABOR PROVISIONS FOR STATE PROJECTS (000---011)

STATE OF TEXAS
DAVID R. BALLI
62920
REGISTERED PROFESSIONAL ENGINEER

"I hereby certify that these plans reflect the project as actually constructed."

David R. Balli, PE. 2/15/00
David R. Balli, PE Date
Area Engineer

TEXAS DEPARTMENT OF TRANSPORTATION

CONCURRENCE 4/30/97
CITY OF SAN ANTONIO Dir. of Pub. Wks.

APPROVED FOR LETTING
DIRECTOR, TRAFFIC OPERATIONS DIVISION

SUBMITTED FOR LETTING 4/16/97
David R. Balli, P.E.
AREA ENGINEER

RECOMMENDED FOR LETTING 5/8/97
John P. Kelly P.E.
DISTRICT ENGINEER

APPROVED FOR LETTING 7-1-97
Fred D. Woodall P.E.
for DIRECTOR, DESIGN DIVISION

COUNTY ____ PROJ. NO. ____
HWY. NO. ____ LETTING DATE ____
DATE ACCEPTED ____

H:\DRAWINGS\673\503\100\L1604CVR.DGN

CO#	DESCRIPTION	SHEET NOS.
1	ADD SPECIAL SIGNS	281a & 281b
2	ADD CELLULAR PHONES	NA
3	AUSTIN MINOR REVISIONS TO BRIDGES	147A, 148A, 150A, 152A-155A, 157A-160A, 162A, 164A-168A-D
4	ADD 54" STEEL PIPE (SAWS)	400A
5	ADD 16"GAS MAIN(SAWCUT)(CPS)	404 & 405
6	REVISE SEQUENCE OF WORK	65A, 71A-73A, 80A, 81A-B, 87A, 88A-B, 96A, 97A-B
7	INSTALL GATE @ BRAUN RD	NA
8	ADD FND FOR RDWY ILL ASSEM & CONDUIT	NA
9	ADD TEMPORARY TRAFFIC SIGNAL @ BOWENS CROSSING	NA
10	ADD NO. 8 ELEC CONDUCTOR IN LIEU OF NO. 6	NA
11	ADD MOWING	NA
12	VOID	
13	ADD CELL FIB MULCH	NA
14	ADDITIONAL WORK AT DRWY#1 AND MOVE DRWY #12	NA
15	ADDITIONAL MOWING AT BRAUN RD	NA
16	ADD TEMPORARY TRAFFIC SIGNAL @ BRAUN RD	NA
17	EXTEND STR 3A	NA
18	ADJUST INLET	NA
19	ADD GUARDRAIL REPAIR	NA
20	TIME EXTENSION	NA
21	REVISE DRAINAGE	192A, 194A, 200A, 202A, 206A
22	Correct Topsoil Quantity	NA

CHANGE ORDER SUMMARY

FED. RD. DIV. NO.	FEDERAL AID PROJECT NO.		SHEET NO.
6	CD 2452-1-35		1A
STATE	STATE DIST. NO.	COUNTY	
TEXAS	15	BEXAR	
CONT.	SECT.	JOB	HIGHWAY NO.
2452	01	035	LP1604

INDEX OF SHEETS

SHEET NO.	DESCRIPTION
1	TITLE SHEET
2	SHEET INDEX
3-4	PROJECT LAYOUT
5-9	TYPICAL SECTIONS
10	MAINLANE SUPERELEVATION POINT OF ROTATION
11-11L	GENERAL NOTES AND SPECIFICATIONS
12-12D	ESTIMATE AND QUANTITY SUMMARY
13-14	EARTHWORK SUMMARY
15-16	GRADING SUMMARY
17-23	GEOMETRIC LAYOUT SHEETS
24-25	HORIZONTAL CURVE DATA
26-39	EXISTING/REMOVAL PLAN SHEETS
40	MISCELLANEOUS AND REMOVAL ITEM SUMMARY
41	LARGE STRUCTURE AND BRIDGE CLASS STRUCTURE SUMMARY
42	CULVERT SUMMARY
43	STORM SEWER SUMMARY
44	SW3PSUMMARY
45	ELECTRICAL/SERVICE POLE DATA SHEET
46-47	EXISTING SIGN SUMMARY
48-55	SUMMARY OF SMALL SIGNS
56-57	SUMMARY OF LARGE SIGNS
58	PAVEMENT MARKING SUMMARY
58A	DELINEATION /CONCRETE APRONS SUMMARY
59	TRAFFIC SIGNAL SUMMARY
60	SUMMARY OF PROPOSED DRIVEWAY & COMMERCIAL ENTRANCES
61	SHEET OMITTED
62-63	SCHEDULE OF BARRICADES/SEQUENCE OF WORK SUMMARY
64-65	TEMPORARY CONSTRUCTION DETOUR
66-102	SEQUENCE OF WORK (PHASES 1 & 2)
103	VIA (SFPM) (M)
104-117	PLAN SHEETS
118-144A	PROFILE SHEETS
145-146	MISCELLANEOUS DETAILS
147-168	BRIDGE LAYOUT & DETAILS (LOOP 1604 AT HELOTES CREEK)
169	FD (M)
170	IBA (M)
171	IBB (M)
172	IBDO (M)
173	IBMS (M)
174	IBTS (M)
175	SEJ-A (M)
176	MEBR (C) - 1(M)
177	MEBR (C) - 2(M)
178	PMDF (C) (M)
179	ODSR (M)
180	CRR (M)
181-182	SSTR (M) 1 THRU 2
183	QUAD - 97(M) STATE STANDARDS
184-187	INTERSECTION LAYOUTS(BRAUN, NEW GUILBEAU, BOWENS CROSSING & SHAENFIELD)
187A	BRAUN ROAD / INTERSECTION CONTOUR
188-189	EXTERIOR DRAINAGE AREA MAP
190-193	INTERIOR DRAINAGE AREA MAP
194	HYDRAULIC DATA SHEET - STRUCTURES UNDER 42.5 CMS
195	INLET COMPUTATIONS & DRAIN PIPE CALCULATIONS
196-201	CULVERT LAYOUTS
202	DRAINAGE LAYOUT FOR BRAUN ROAD
203-206	CULVERT SECTIONS
207	TxDOT STORM WATER POLLUTION PREVENTION PLAN
208-211	SW3P LAYOUTS
212	NORTHBOUND & SOUTHBOUND AT HELOTES CREEK GRADING PLAN
213	HYDRAULIC STUDY
214	ARMOR CURB SLOT DETAIL (M)
215	DROP INLET TYPE 3 (M) / GRATE TYPE 2 (M) (DISTRICT STANDARDS)
216	DROP INLET TYPE 3A (M) / GRATE TYPE 2 (M)
217	DROP INLET TYPE 6 (M) / GRATE TYPE 2 (M)
218	DROP INLET TYPE W-1 (M)
219	TYPE 3 AND 4 GRATE (M)
220	CURB INLET TYPE 1 THRU VIII LOWER UNIT (M)
221	CURB INLET TYPE 1 THRU VIII UPPER UNIT (M)
222	RIP RAP HEADWALL (M)

INDEX OF SHEETS (CONTINUED)

SHEET NO.	DESCRIPTION
223-224	CD - SPR (M) (2 SHEETS)
225	PD - SPR (M)
226	PW - 15 - 1.2 (M)
227	PW - 15 - 1.5 (M)
228-229	SET B - 0 - 3 (M) (2 SHEETS)
230-233	EC (1,2,3, & 6)-95 (M)
234	SCP - 1.2 (M)
235	SCP - 1.5 (M)
236	SCP - 1.8 (M)
237	SCP - 2.1 (M)
238	SCC - 0.9 & 1.2 (M)
239	SCC - 1.5 (M)
240	SCC - 1.8 (M)
241	MC - 1.5 - 6 (M)
241A	MC - 1.8 - 5 (M)
241B	MC - 2.1 - 3 (M)
242	MC-MD (M) MISC DETAILS
243	RHD - 97 (M)
244	SCC - MD (M) MISC DETAILS STATE STANDARDS
245-255	ILLUMINATION PLAN SHEETS
256-257	RID (1,2) - 93A(M)
258	RID (3) - 93B(M)
259-261	ED (1 THRU 3) - 93A(M) STATE STANDARDS
262	ED (4) - 93A(M) (DISTRICT STANDARD)
263,263A	PCTB (1 & 2) - 95(M)
264	MBGF - 95A(M)
265-266	SGT (5)-(6) - 97(M)
267	BED - 95(M)
268-277	BC (1 THRU 10) - 97 (M)
277A	BC NOTES - 97 (M)
278	WZ (STPM) - 97(M)
279	WZ (BD) - 97(M)
280	WZ (UL) - 97(M)
281	WZ (CD) - 94(M)
282	WZ (BTS-1) - 97 (M)
283,284	WZ (BTS-2) - 97 (M), WZ(BTS-NOTES)-97(M)
285	WZ (BRK-1) - 96A(M)
286	WZ (BRK-2) - 96A(M) STATE STANDARDS
287-288	D&OM (1,2) - 95(M) (DISTRICT STANDARD)
289	D&OM (VIA) - 95 (M)
290	TCP (NOTES) - 97(M)
291-294	TCP (2-1), (2-2), (3-2), (3-3) - 97(M)
295-299	TCP (6-1 THRU 6-5) - 97(M)
300,300A	TCP (6-8) - 97(M), TCP (7-1) - 97(M)
301	RPM (1) - 92(M) STATE STANDARDS
302	FPM (1) (M) (DISTRICT STANDARD)
303	FPM (4) - 92(M)
304	PM (1) - 95A(M)
305	PM (2) - 95(M)
306	POST AND CABLE STANDARD - PCF-97(M) (STATE STANDARD)
307-315	TRAFFIC SIGNAL LAYOUTS AND DETAILS(BRAUN ROAD, NEW GUILBEAU, BOWENS CROSSING)
316	VIVDS DETAILS
317	MISCELLANEOUS ROADWAY DETAILS (WHEEL CHAIR RAMP/PAD DETAILS)
318	LOOP DETECT CNTR FOUND & CONDT TRENCH DTLS (DISTRICT STANDARD)
318A	CONTROLLER FOUNDATION DETAIL (CITY OF SAN ANTONIO STANDARD)
319	MAST ARM POLE ELEVATION DETAILS (DISTRICT STANDARD)
320	ED (7) - 93A(M)
321-322	SP-130 (1,2)96(M)
323-324	SMA-130 (1,2) - 96(M)
325-327	DMA-130 (1,2,3) - 96(M)
328	MA-C - 96(M)
329	MA-D - 96(M)
330	TS-FD - 96(M) STATE STANDARDS
331-346	SIGNING LAYOUTS & DETAILS
347-360	PAVEMENT MARKINGS LAYOUTS
361	RIP RAP APRON DETAILS FOR SIGN FOUNDATIONS
362	TYPICAL CROSSWALK DETAILS (M)
363	TPMD (M)
364	MLTBD (SHEET 2 OF 2) (DISTRICT STANDARD)

INDEX OF SHEETS (CONTINUED)

SHEET NO.	DESCRIPTION
365	IM - (1) - 95(M)
366-368	IE (1,2 & 4)-95(M)
369-371	IM (2 THRU 4) - 93(M)
372-375	M (1,3 & 4) - 95(M) (OMIT SHT. 375)
376-378	R (1THRU 3) - 95(M)
379	R (4) - 95A(M)
380-382	W (1,2 & 3) - 95(M)
383-386	SMD (1-1), (1-2), (1-3) (1-4) - 97(M)
387	SMD (2-1) - 97 (M)
388-389	SMD (2-2), (2-3) - 95A (M)
390	SMD (TYG) - 97(M)
391	DERD-97(M)
391A	SSCB (2) - 95(M)
391B	CCCG - 95(M) STATE STANDARDS
	UTILITY RELOCATIONS
392	SANITARY SEWER GENERAL NOTES
393	WATER DISTRIBUTION SYSTEM GENERAL NOTES
394	SANITARY SEWER PLAN AND PROFILE
395-397	SANITARY SEWER STANDARD DETAILS
398-400	WATER DISTRIBUTION SYSTEM IMPROVEMENT PLANS
401-403	WATER DISTRIBUTION SYSTEM STANDARD DETAILS

The standard sheets specifically identified above have been issued by me and are applicable to this project.

Brent L. Christian 6/16/97
DATE

STATE OF TEXAS
BRENT L. CHRISTIAN
73921
REGISTERED
PROFESSIONAL ENGINEER

Brent L. Christian
6/16/97

Rev. 7-25-97

NO.	DATE	REVISION	APPROV.

Texas Department of Transportation
LOOP 1604

SHEET INDEX

Kimley-Horn and Associates, Inc.

Designed	DIST	FED REG	FEDERAL AID PROJECT			HIGHWAY
Checked	15	6				LP1604
Drawn	COUNTY		CONTROL	SECT	JOB	SHEET
Checked	BEXAR		2452	01	035	2

H:\DRAWINGS\6731603\100\L1604CVR.DGN

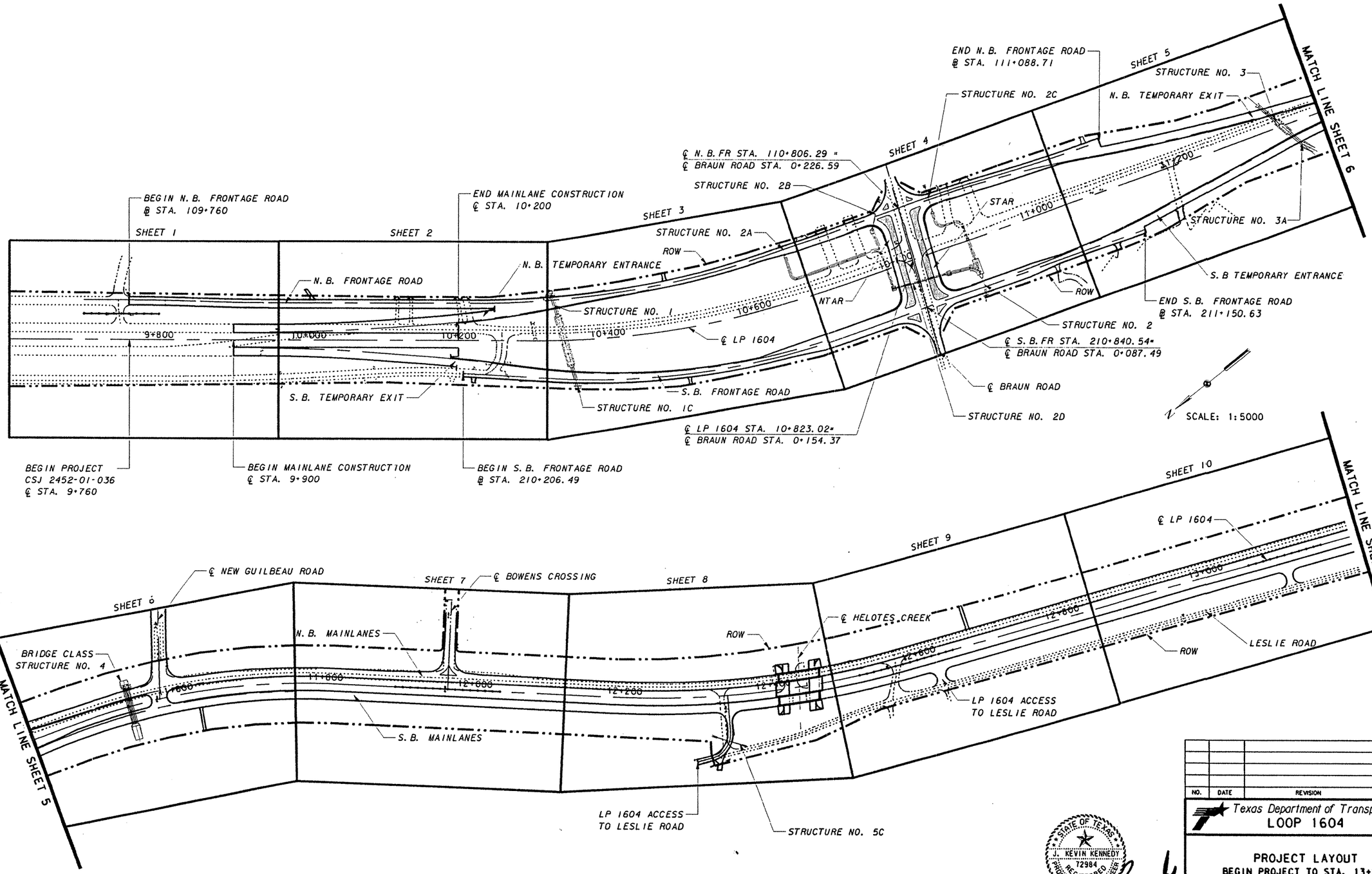

NO.	DATE	REVISION	APPROV.

Texas Department of Transportation
LOOP 1604

PROJECT LAYOUT
BEGIN PROJECT TO STA. 13+200

SHEET 1 OF 2

Kimley-Horn and Associates, Inc.

STATE OF TEXAS
J. KEVIN KENNEDY
72984
REGISTERED
PROFESSIONAL ENGINEER

J. Kevin Kennedy
5-2-97

Designed	BHS	DIST	FED REG	FEDERAL AID PROJECT •				HIGHWAY
Checked	LMW	15	6	CD 2452-01-035				LP1604
Drawn	KWA	COUNTY		CONTROL	SECT	JOB		SHEET
Checked	JKK	BEXAR		2452	01	035		3

FILENAME: g:\67316-03\604\pc01.dgn PLOTTED: 28 APR 97 14:36:31

LEVELS DISPLAYED

1	2	3	4	5	6	7	8	9	10	11	12	13	14	15	16
17	18	19	20	21	22	23	24	25	26	27	28	29	30	31	32
33	34	35	36	37	38	39	40	41	42	43	44	45	46	47	48
49	50	51	52	53	54	55	56	57	58	59	60	61	62	63	

SCALE: 1:5000

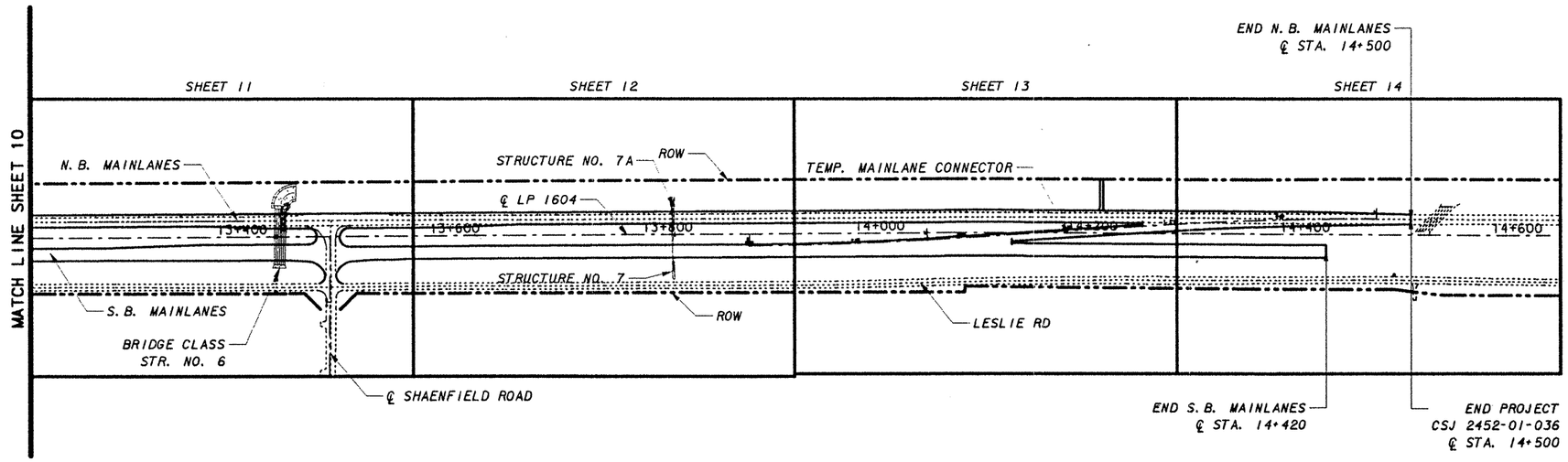

NO.	DATE	REVISION	APPROV.

Texas Department of Transportation
LOOP 1604

PROJECT LAYOUT
STA. 13+200 TO END PROJECT

SHEET 2 OF 2

Kimley-Horn and Associates, Inc.

STATE OF TEXAS
J. KEVIN KENNEDY
72984
REGISTERED
PROFESSIONAL ENGINEER

J. Kevin Kennedy
5-2-97

Designed	DIST	FED REG	FEDERAL AID PROJECT #			HIGHWAY
Checked	15	6	CD 2452-01-035			LP1604
Drawn	COUNTY		CONTROL	SECT	JOB	SHEET
Checked	BEXAR		2452	01	035	4

FILENAME: G:\67316-03\604rpc02.dgn PLOTTED: 28 APR 97 10:27:38

LEVELS DISPLAYED
1 2 3 4 5 6 7 8 9 10 11 12 13 14 15 16
17 18 19 20 21 22 23 24 25 26 27 28 29 30 31 32
33 34 35 36 37 38 39 40 41 42 43 44 45 46 47 48
49 50 51 52 53 54 55 56 57 58 59 60 61 62 63

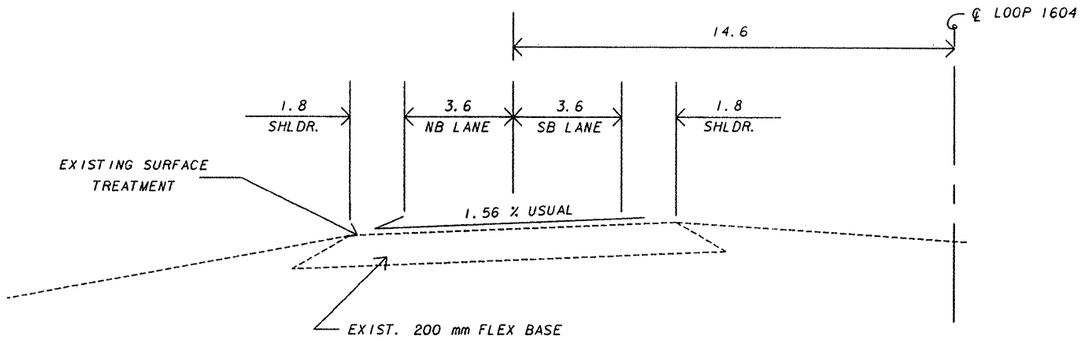

EXISTING MAINLINES

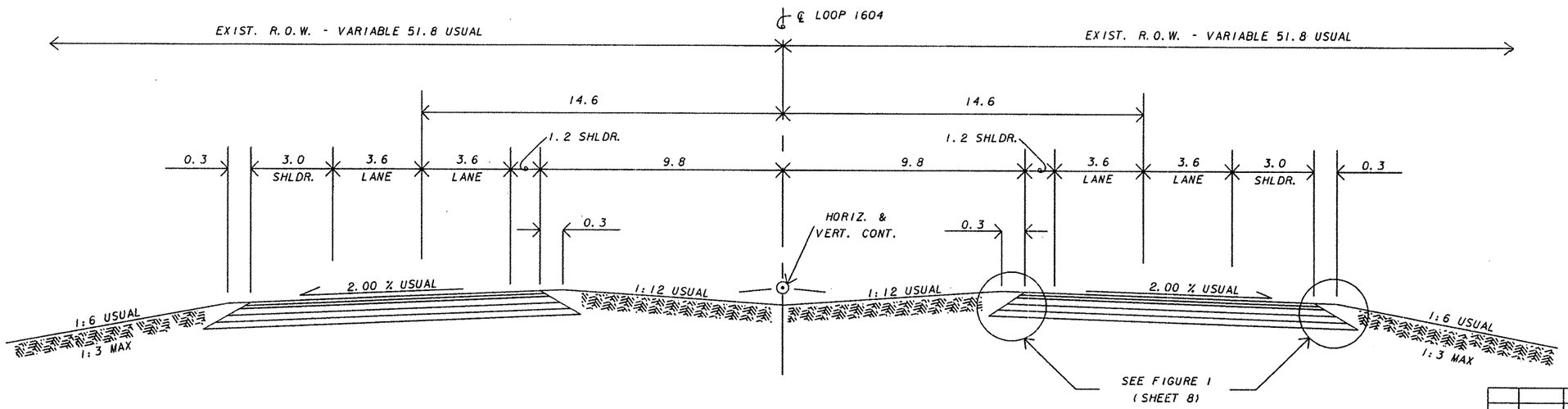

MAINLANES (LP 1604)

NORTHBOUND

STA 9+900 TO STA 10+200
STA 11+560 TO STA 11+600 (ASPH. STAB. BASE)
STA 11+600 TO STA 11+690
STA 12+000 TO STA 13+460
STA 13+500 TO STA 14+500

SOUTHBOUND

STA 9+900 TO STA 10+200
STA 11+759 TO STA 13+460
STA 13+500 TO STA 14+420

ALL DIMENSIONS ARE IN METERS UNLESS OTHERWISE NOTED

STATE OF TEXAS
BRENT L. CHRISTIAN
73921
REGISTERED PROFESSIONAL ENGINEER
Brent L. Christian
5/5/97

NO.	DATE	REVISION	APPROV.

Texas Department of Transportation
LOOP 1604

TYPICAL SECTIONS

1 OF 5

Kimley-Horn and Associates, Inc.

Designed	DIST	FED REG	FEDERAL AID PROJECT •			HIGHWAY
Checked	15	6				LP1604
Drawn	COUNTY		CONTROL	SECT	JOB	SHEET
Checked	BEXAR		2452	01	035	5

LEVELS DISPLAYED

1	2	3	4	5	6	7	8	9	10	11	12	13	14	15	16
17	18	19	20	21	22	23	24	25	26	27	28	29	30	31	32
33	34	35	36	37	38	39	40	41	42	43	44	45	46	47	48
49	50	51	52	53	54	55	56	57	58	59	60	61	62	63	

H:\DRAWINGS\ 6731603\ 60\ 1604TYP.DGN

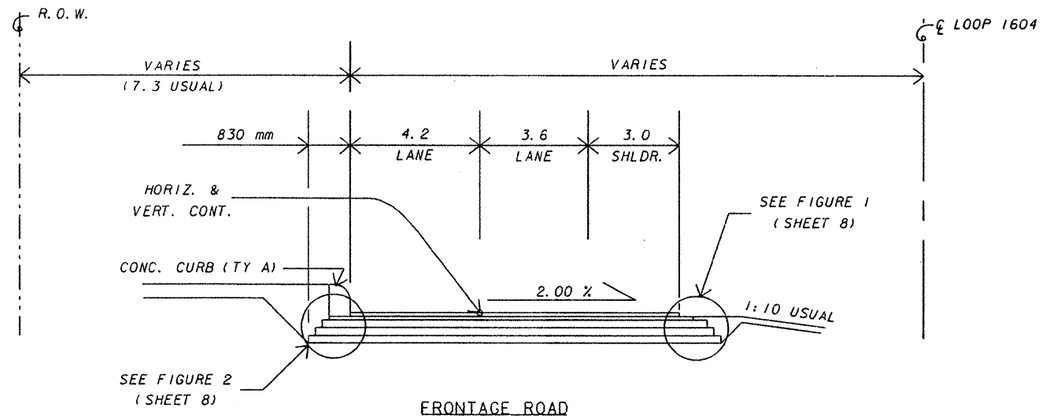

FRONTAGE ROAD

NORTHBOUND
STA 109+760 TO STA 111+088

SOUTHBOUND
STA 210+206 TO STA 210+260 (ASPH. STAB. BASE)
STA 210+260 TO STA 211+150

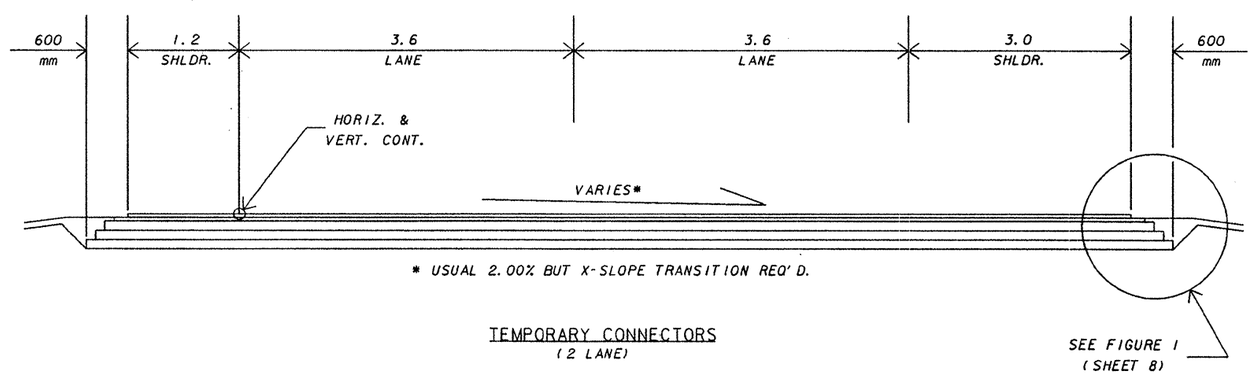

* USUAL 2.00% BUT X-SLOPE TRANSITION REQ'D.

TEMPORARY CONNECTORS
(2 LANE)

NORTHBOUND
STA 0+190 TO STA 0+378
STA 0+247 TO STA 0+702

SOUTHBOUND
STA 0+173 TO STA 0+300
STA 0+300 TO STA 0+325 (ASPH. STAB. BASE)
STA 0+325 TO STA 0+393
STA 0+179 TO STA 0+810

ALL DIMENSIONS ARE IN
METERS UNLESS OTHERWISE
NOTED

STATE OF TEXAS
BRENT L. CHRISTIAN
73921
REGISTERED
PROFESSIONAL ENGINEER
Brent L. Christian
5/5/97

NO.	DATE	REVISION	APPROV.

Texas Department of Transportation
LOOP 1604

TYPICAL SECTIONS

2 OF 5

Kimley-Horn and Associates, Inc.

Designed	DIST	FED REG	FEDERAL AID PROJECT				HIGHWAY
Checked	15	6					LP1604
Drawn	COUNTY		CONTROL	SECT	JOB		SHEET
Checked	BEXAR		2452	01	035		6

LEVELS DISPLAYED

1	2	3	4	5	6	7	8	9	10	11	12	13	14	15	16
17	18	19	20	21	22	23	24	25	26	27	28	29	30	31	32
33	34	35	36	37	38	39	40	41	42	43	44	45	46	47	48
49	50	51	52	53	54	55	56	57	58	59	60	61	62	63	

H:\DRAWINGS\68036603\60\1604TYP.DGN

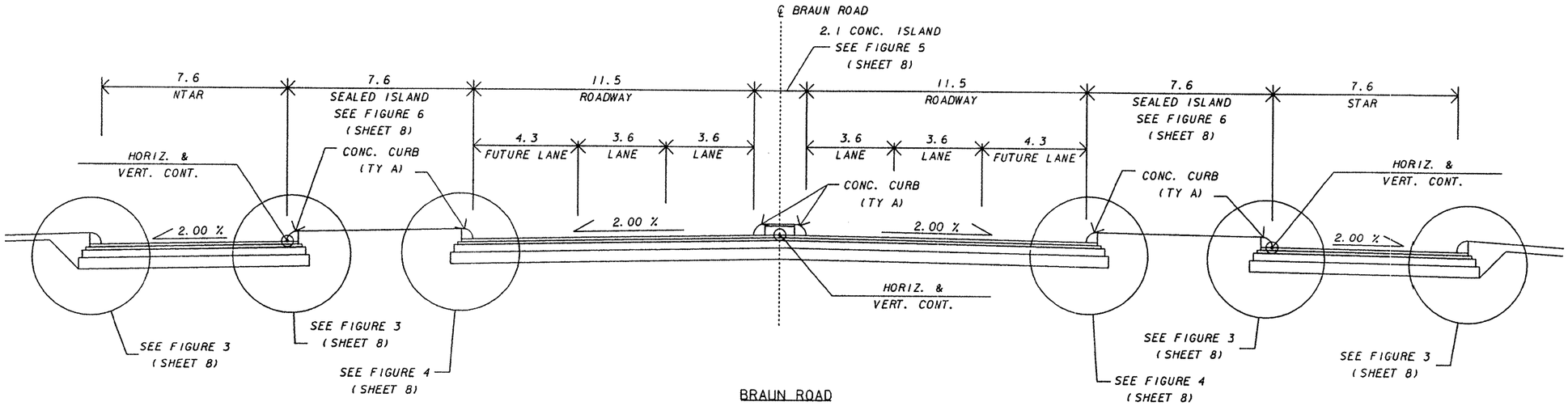

BRAUN ROAD

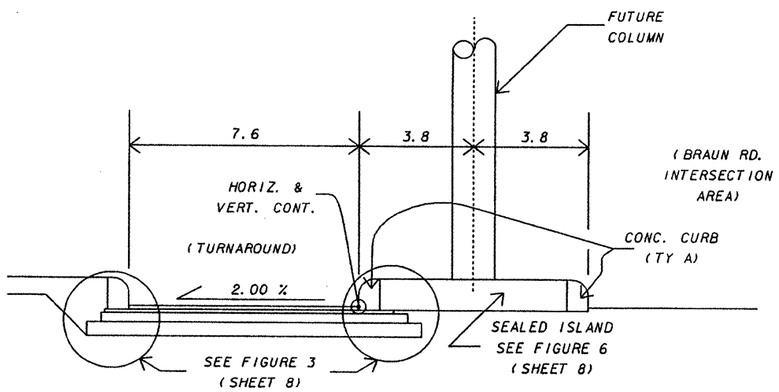

TURN AROUND
(BRAUN ROAD)

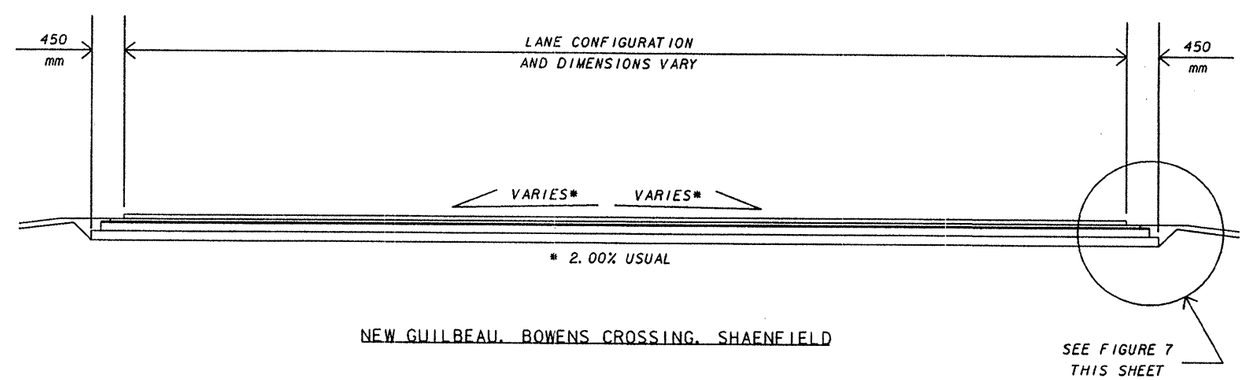

NEW GUILBEAU, BOWENS CROSSING, SHAENFIELD

ALL DIMENSIONS ARE IN METERS UNLESS OTHERWISE NOTED

NO.	DATE	REVISION	APPROV.

Texas Department of Transportation
LOOP 1604

TYPICAL SECTIONS

3 OF 5

STATE OF TEXAS
BRENT L. CHRISTIAN
73921
REGISTERED
PROFESSIONAL ENGINEER

Brent L. Christian
5/5/97

Kimley-Horn and Associates, Inc.

Designed	DIST	FED REG	FEDERAL AID PROJECT •			HIGHWAY
Checked	15	6				LP1604
Drawn	COUNTY		CONTROL	SECT	JOB	SHEET
Checked	BEXAR		2452	01	035	7

LEVELS DISPLAYED

1	2	3	4	5	6	7	8	9	10	11	12	13	14	15	16
17	18	19	20	21	22	23	24	25	26	27	28	29	30	31	32
33	34	35	36	37	38	39	40	41	42	43	44	45	46	47	48
49	50	51	52	53	54	55	56	57	58	59	60	61	62	63	

H:\DRAWINGS\ 6731603\ 60\ 1604TYP.DGN

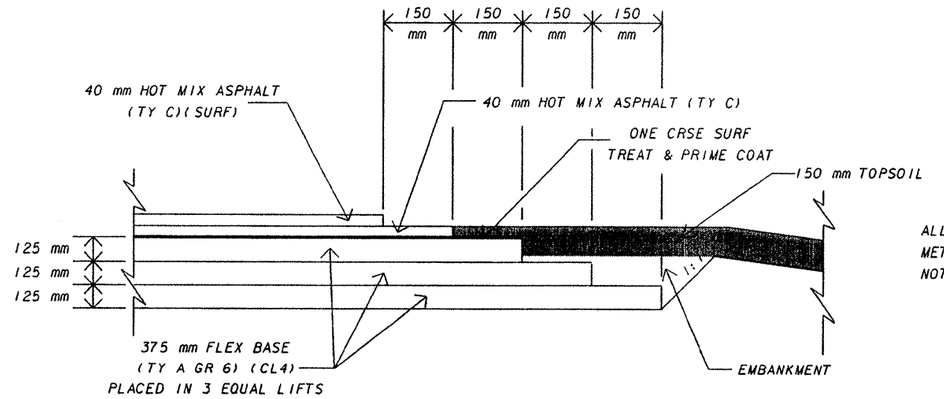

FIGURE 1

ALL DIMENSIONS ARE IN METERS UNLESS OTHERWISE NOTED

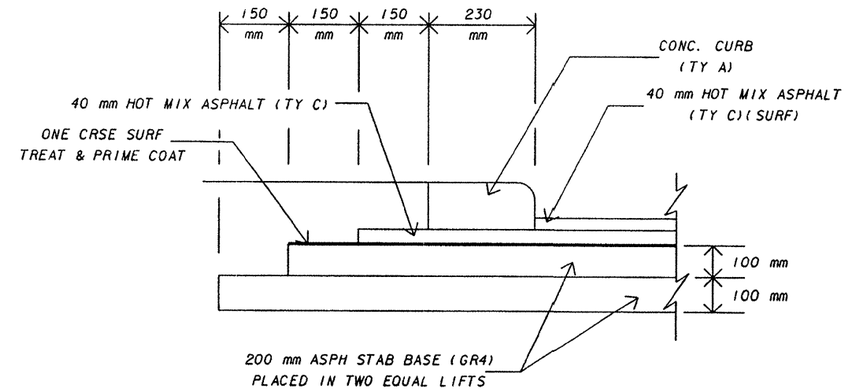

FIGURE 4

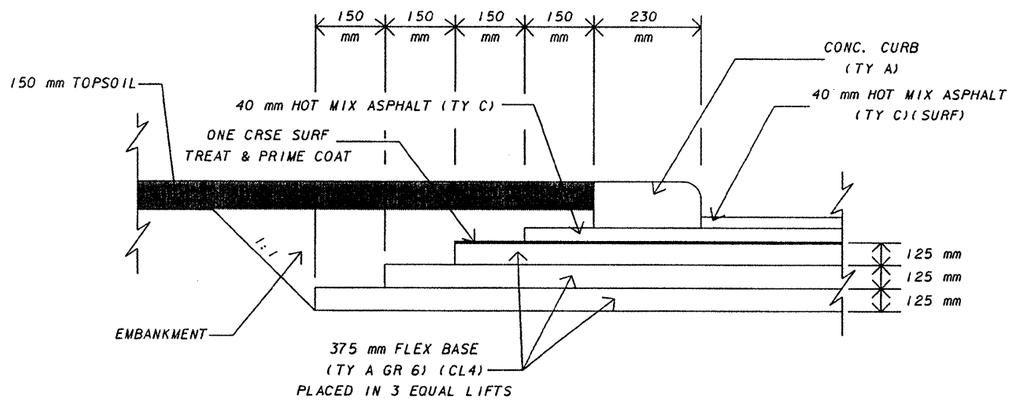

FIGURE 2

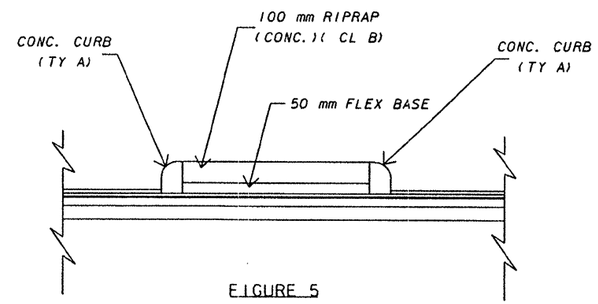

FIGURE 5

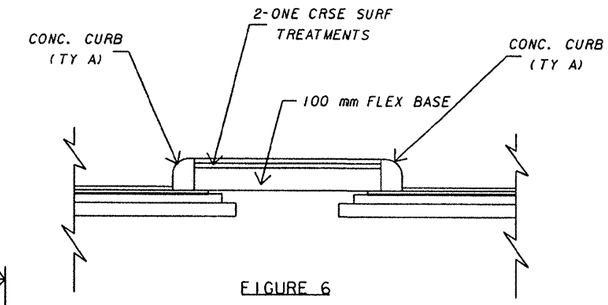

FIGURE 6

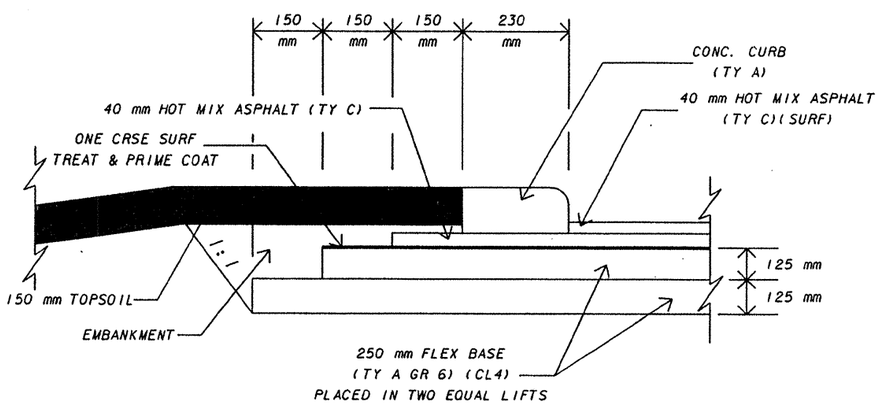

FIGURE 3

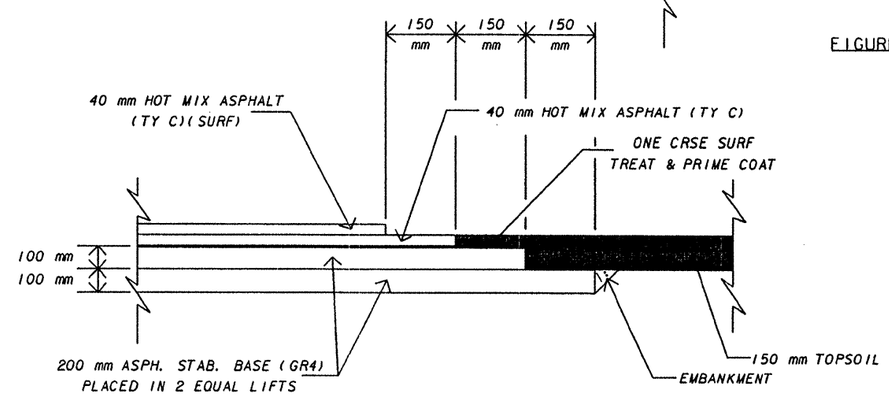

FIGURE 7

STATE OF TEXAS
BRENT L. CHRISTIAN
73921
REGISTERED PROFESSIONAL ENGINEER
Brent L. Christian
5/5/97

TOPSOIL

NO.	DATE	REVISION	APPROV.

Texas Department of Transportation
LOOP 1604

TYPICAL SECTIONS

4 OF 5

Kimley-Horn and Associates, Inc.

Designed	DIST	FED REG	FEDERAL AID PROJECT			HIGHWAY
Checked	15	6				LP1604
Drawn	COUNTY		CONTROL	SECT	JOB	SHEET
Checked	BEXAR		2452	01	035	8

LEVELS DISPLAYED
1 2 3 4 5 6 7 8 9 10 11 12 13 14 15 16
17 18 19 20 21 22 23 24 25 26 27 28 29 30 31 32
33 34 35 36 37 38 39 40 41 42 43 44 45 46 47 48
49 50 51 52 53 54 55 56 57 58 59 60 61 62 63

H:\DRAWINGS\ 6731603\ 60\ 1604TYP.DGN

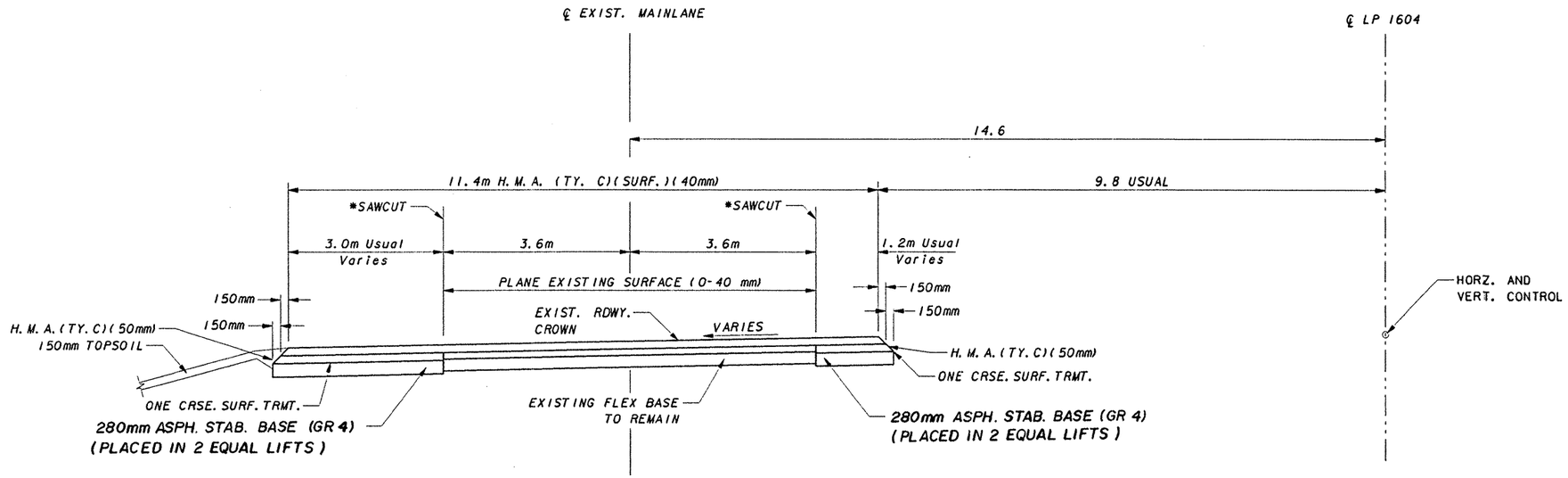

TYPICAL SECTION
NORTHBOUND MAINLANE WIDENING
(FROM STA. 11+640.92 TO STA. 12+000)

NOTES:
SPOT BASE REPAIR WILL BE PERFORMED AT THE LOCATION INDICATED ON THE PLAN SHEETS. THE EXISTING MATERIAL WILL BE REMOVED AND REPLACED WITH FLEX BASE TO THE SAME DEPTH (200 MM USUAL). H.M.A. (TY C) (LEVEL-UP) WILL BE USED TO BRING THE EXISTING ROADWAY CROWN TO THE SPECIFIED CROSS-SLOPE AS NECESSARY.

* SAW CUTTING SHALL BE CONSIDERED SUBSIDIARY TO THE VARIOUS/PERTINANT BID ITEMS.

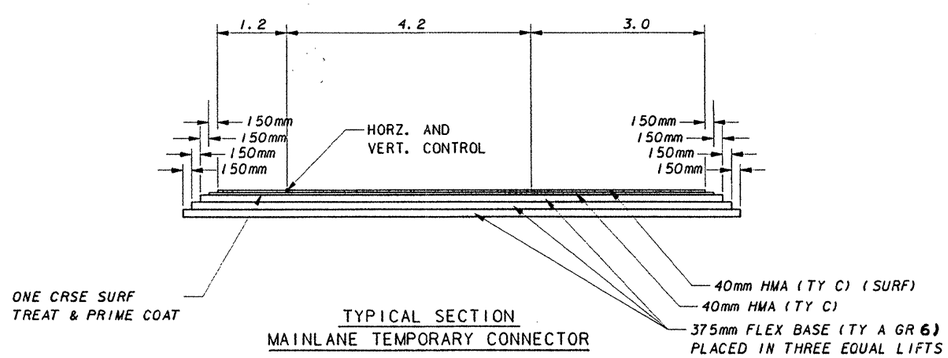

TYPICAL SECTION
MAINLANE TEMPORARY CONNECTOR

STATE OF TEXAS
J. KEVIN KENNEDY
72984
REGISTERED
PROFESSIONAL ENGINEER

J. Kevin Kennedy
5-2-97

NO.	DATE	REVISION	APPROV.

Texas Department of Transportation
LOOP 1604

TYPICAL SECTION

SHEET 5 OF 5

Kimley-Horn and Associates, Inc.

Designed	LMW	DIST	FED REG	FEDERAL AID PROJECT				HIGHWAY
Checked	BHS	15	6	CD 2452-01-035				LP1604
Drawn	LMW	COUNTY			CONTROL	SECT	JOB	SHEET
Checked	BHS	BEXAR			2452	01	035	9

LEVELS DISPLAYED

1	2	3	4	5	6	7	8	9	10	11	12	13	14	15	16
17	18	19	20	21	22	23	24	25	26	27	28	29	30	31	32
33	34	35	36	37	38	39	40	41	42	43	44	45	46	47	48
49	50	51	52	53	54	55	56	57	58	59	60	61	62	63	

FILENAME: G:\67316-03\6048ST03.DGN PLOTTED: 02 MAY 97 08:01:20

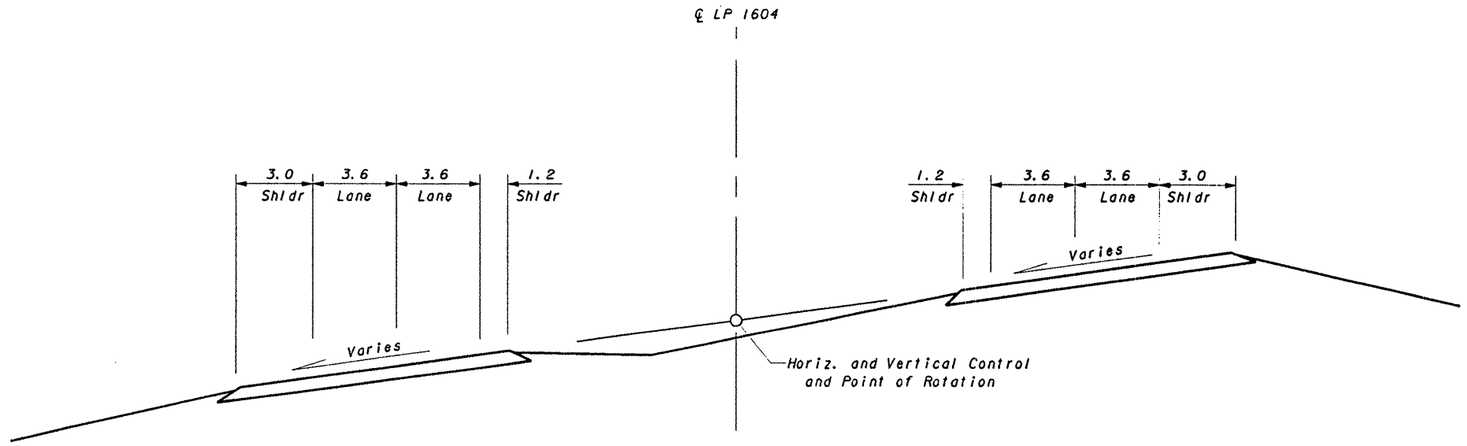

SUPERELEVATION POINT OF ROTATION

(BEGIN PROJECT TO STA. 11+640.92 AND STA. 11+882.00 TO END PROJECT)

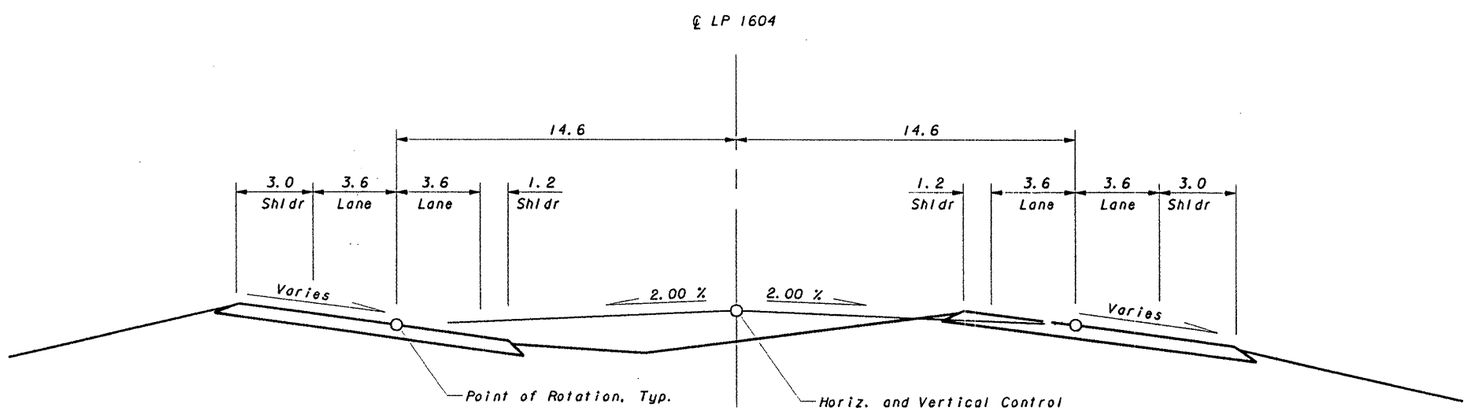

SUPERELEVATION POINT OF ROTATION

(STA. 11+640.92 TO STA. 11+882.00)

Note: All temporary connector and ramp superelevation is rotated about the respective control line.

STATE OF TEXAS
J. KEVIN KENNEDY
72984
REGISTERED PROFESSIONAL ENGINEER

J. Kevin Kennedy
5-2-97

NO.	DATE	REVISION	APPROV.

Texas Department of Transportation
LOOP 1604

MAINLANE SUPERELEVATION
POINT OF ROTATION

Kimley-Horn and Associates, Inc.

Designed	DIST	FED REG	FEDERAL AID PROJECT			HIGHWAY
Checked	15	6	CD 2452-01-035			LP1604
Drawn	COUNTY		CONTROL	SECT	JOB	SHEET
Checked	BEXAR		2452	01	035	10

LEVELS DISPLAYED

1	2	3	4	5	6	7	8	9	10	11	12	13	14	15	16
17	18	19	20	21	22	23	24	25	26	27	28	29	30	31	32
33	34	35	36	37	38	39	40	41	42	43	44	45	46	47	48
49	50	51	52	53	54	55	56	57	58	59	60	61	62	63	

FILENAME: g:\67316-03\supersct.dgn PLOTTED: 28 APR 97 14:41:36

GENERAL NOTES AND SPECIFICATION DATA--

GRADING REQUIREMENTS FOR:
ITEM 247 FLEX BASE (TY A GR 6)
& ITEM 345 ASPH STAB BASE (GR 4)

(MM)	45	31.75	22.40	9.50	4.75	0.425	SOIL CONSTANTS LL MAX	PI MAX	PI MIN	WET BALL MILL MAX
PERCENT RETAINED ON EACH SIEVE										
(247)	0-10	-	-	-	45-75	65-85	45	15	-	*55
PERCENT PASSING EACH SIEVE										
(345)	100	90-100	70-90	50-75	35-55	20-35	45	15	-	*55

* THE MAXIMUM INCREASE IN MATERIAL PASSING THE 0.425 MM SIEVE SHALL NOT EXCEED 20.

COMPACTION REQUIREMENTS

ITEM	MATERIAL	COURSE	DENSITY
247	FLEX BASE	ALL	98 % MINIMUM

BASIS OF ESTIMATE

ITEM	DESCRIPTION	RATE	QUANT	UNIT
168	VEGETATIVE WATERING	KL/BI-WEEKLY @ 3 MO.	15,110	KL
310	ASPH MATRL(AE-P)	0.9 L/M2	123,394	L
345	ASPH STAB BASE(200MM)	0.470 MG/M2	5,625	MGR
345	ASPH STAB BASE(280MM)	0.658 MG/M2	1,704	MGR

- THE FOLLOWING IS FOR CONTRACTOR'S INFORMATION ONLY - NON PAY

204	SPRINK(EMB)	0.20 KL/M3
211	ROLL(EMB)	1 H/250 M2
212	ROLL(EMB)	1 H/250 M2
213	ROLL(MED-B)(SUBGR)	1 H/250 M2
213	ROLL(MED-B)(TPSL)	1 H/8360 M2
213	FOR SURF TRMT	-SEE ITEM 316 NOTES-

ASPHALTIC CONCRETE PAVEMENT

TYPE	LOCATION	DEPTH	RATE	AREA-M2	QTY-MGR
TY C (SURF)	ML'S/CONNECTORS /FRONTAGE RDS	40MM	0.0940 MG/M2	134,482	12,641
TY C	ML'S/CONNECTORS /FRONTAGE RDS	40MM	0.0940 MG/M2	133,964	12,593

GENERAL NOTES AND SPECIFICATION DATA--

SURFACE TREATMENT DATA

DESCRIPTION	ONE COURSE
AREA	141,978 M2
ASPH--TYPE	----- SEE GEN NOTES -----
ASPH--RATE(L/M2)	1.36 L/M2 = 193,090 L
AGGR--TYPE/GR	TY PB/GR4
AGGR--RATE(M3/M2)	1/110 = 1,291 M3

ON PLAN SHEETS 66-81, 83-85, AND 87-98, THE FOLLOWING NEW NOTE SHALL REPLACE THE OLD EXISTING NOTE.

NEW NOTE:
THE CONTRACTOR SHALL USE ASPHALT STAB. BASE AT BRAUN ROAD, NEW GUILBEAU, BOWENS CROSSING, AND SHAENFIELD INTERSECTIONS. REFER TO PLAN SHEETS FOR THE LIMITS OF ASPHALT STAB. BASE, AND SHEET 8 (FIGURE 7) FOR TYPICAL SECTION. IF BOTH LIFTS OF ASPHALT STAB. BASE CANNOT BE COMPLETED IN ONE (1) DAY, THEN ASPHALT SHALL BE PLACED BETWEEN ASPHALT STAB. BASE AND TOP OF EXISTING PAVEMENT AT A 3:1 SLOPE. SLOPE SHALL BE REMOVED PRIOR TO PLACEMENT OF THE SECOND LIFT.

OLD NOTE:
THE CONTRACTOR SHALL USE BLACK BASE ON ALL DETOURS AND AT BRAUN ROAD, NEW GUILBEAU, BOWENS CROSSING, AND SHAENFIELD INTERSECTIONS. SEE INTERSECTION LAYOUTS FOR LIMITS OF BLACK BASE. ASPHALT SHALL BE PLACED BETWEEN BLACK BASE AND TOP OF EXISTING PAVEMENT AT 3:1 SLOPE. ASPHALT SLOPE SHALL BE USED BETWEEN PLACEMENT OF EACH LIFT OF BLACK BASE IF BOTH LIFTS CANNOT BE COMPLETED IN ONE (1) DAY. SLOPE SHALL BE REMOVED PRIOR TO PLACEMENT OF SECOND LIFT.

ALL PAVEMENT MARKINGS SHALL BE IN ACCORDANCE WITH THE TEXAS MUTCD.

THE LOCATION OF UTILITIES, EITHER UNDERGROUND OR OVERHEAD, SHOWN WITHIN THE RIGHT OF WAY ARE APPROXIMATE AND SHALL BE VERIFIED BY THE CONTRACTOR BEFORE BEGINNING CONSTRUCTION OPERATIONS.

THE FOLLOWING IS A LIST OF SOME OF THE TELEPHONE NUMBERS OF THE UTILITY LOCATORS FOR VARIOUS UTILITIES THAT MAY BE ENCOUNTERED.

CITY PUBLIC SERVICE (GAS & ELECTRIC) 978-3500

GENERAL NOTES AND SPECIFICATION DATA--

OLD NOTE:, CONT'D

SOUTHWESTERN BELL TELEPHONE	1-800-828-5127
PARAGON CABLE SYSTEM	222-9961 OR 222-9962
SAN ANTONIO WATER SYSTEM	704-7297 OR 227-6143

THE CONTRACTOR SHALL BE RESPONSIBLE FOR CONTACTING THE TXDOT OR CITY OF SAN ANTONIO SIGNAL OPERATIONS OFFICE AT 210-615-5975 (TXDOT) OR 210-207-7965 (CITY) WHEN CONSTRUCTION OPERATIONS ARE WITHIN 125 METERS OF A SIGNALIZED INTERSECTION TO DETERMINE/VERIFY THE LOCATION OF LOOP DETECTORS, CONDUIT, GROUND-BOXES, ETC. ANY SIGNAL EQUIPMENT DAMAGED BY THE CONTRACTOR'S OPERATIONS SHALL BE REPAIRED OR REPLACED BY THE CONTRACTOR AT THEIR EXPENSE. THE METHOD OF REPAIR OR REPLACEMENT SHALL BE PRE-APPROVED AND INSPECTED BY THE ENGINEER. DEPENDING ON THE TYPE AND EXTENT OF THE DAMAGE, THE STATE RESERVES THE RIGHT TO PERFORM THE REPAIR OR REPLACEMENT WORK WITH STATE OR CITY FORCES AND THE CONTRACTOR WILL BE BILLED FOR THE COST OF THIS WORK.

ALL EXISTING RAISED PAVEMENT MARKINGS SHALL BE REMOVED BY THE CONTRACTOR AS THE WORK PROGRESSES, AS APPROVED BY THE ENGINEER. THIS WORK WILL NOT BE PAID FOR SEPARATELY BUT SHALL BE CONSIDERED SUBSIDIARY TO THE VARIOUS BID ITEMS. MATERIALS REMOVED SHALL BECOME THE PROPERTY OF THE CONTRACTOR FOR PROPER DISPOSAL.

MATERIALS LARGER THAN 100 MM IN SIZE WITHIN THE CONSTRUCTION LIMITS AND NOT INCORPORATED IN TO THE ROADWAY CONSTRUCTION SHALL BE REMOVED FROM THE RIGHT OF WAY AND DISPOSED OF IN A PROPER MANNER ACCEPTABLE TO THE ENGINEER AT THE EXPENSE OF THE CONTRACTOR.

IN INSTANCES WHERE FIXED FEATURES REQUIRE, THE CROSS SECTION SLOPES MAY BE VARIED TO THE EXTENT DETERMINED/APPROVED BY THE ENGINEER.

IF WASTE AREAS OR MATERIAL SOURCE AREAS ARE REQUIRED FOR THE COMPLETION OF THIS PROJECT, SUCH AREAS SHALL NOT BE VISIBLE FROM ANY HIGHWAY ON THE TXDOT SYSTEM UNLESS APPROVED IN ADVANCE IN WRITING BY THE ENGINEER.

THE CONTRACTOR SHALL MAINTAIN THE RIGHT OF WAY IN A SATISFACTORY APPEARANCE AS SHOWN IN THE PLANS AND/OR AS DETERMINED/APPROVED BY THE ENGINEER.

ANY MATERIALS REMOVED AND NOT REUSED ON THIS PROJECT AND DETERMINED TO BE SALVAGEABLE BY THE ENGINEER, SHALL BE RETAINED BY THE STATE AND SHALL BE STORED WITHIN THE PROJECT LIMITS IN A SECURE LOCATION OR DELIVERED UNDAMAGED TO THE STATE'S SALVAGE/STORAGE YARD AS DIRECTED BY THE ENGINEER. MATERIALS THAT ARE NOT DETERMINED TO BE SALVAGABLE BY THE ENGINEER SHALL BECOME THE PROPERTY OF THE CONTRACTOR FOR PROPER

GENERAL NOTES AND SPECIFICATION DATA--

OLD NOTE:, CONT'D
DISPOSAL AT THEIR EXPENSE.

IN PREPARING HOLES FOR POSTS AND/OR FOUNDATIONS, CARE SHALL BE TAKEN SO AS NOT TO RUPTURE EXISTING DRAINAGE STRUCTURES, ELECTRICAL CONDUITS, PUBLIC UTILITIES, ETC.

ANY SIGN PANELS THAT ARE TO BE ADJUSTED AND/OR REMOVED AND REPLACED, SHALL BE DONE IN THE SAME WORKDAY UNLESS OTHERWISE APPROVED BY THE ENGINEER.

SMALL SIGNS ON RAMPS AND FRONTAGE ROADS SHALL BE PLACED AT A LATERAL CLEARANCE OF 2.50 M TO 3.70 M FROM THE EDGE OF PAVEMENT AS DIRECTED/APPROVED BY THE ENGINEER.

SIGN TYPES FOR WHICH DETAILS ARE NOT SHOWN IN THE PLANS SHALL CONFORM WITH THE "TEXAS MUTCD".

--ITEM 2--
THE BIDDER'S ATTENTION IS DIRECTED TO THE FIRST PARAGRAPH OF ARTICLE 2.3 OF THE STANDARD SPECIFICATIONS. IN VIEW OF THE COMPLEX NATURE OF THE WORK, THE NEED FOR CLOSE COORDINATION WITH VARIOUS UTILITIES, TRAFFIC CONTROL CONSIDERATIONS, AND OTHER FACTORS INFLUENCING THE PROSECUTION OF THE WORK, IT IS STRONGLY RECOMMENDED THAT PROSPECTIVE BIDDERS EXAMINE THE SITE OF THE WORK IN COMPANY WITH THE ENGINEER.

--ITEM 8--
BETWEEN APRIL 1ST AND OCTOBER 31ST, THE TEXAS NATURAL RESOURCE CONSERVATION COMMISSION (TNRCC) WILL BE MONITORING WEATHER CONDITIONS ON A DAILY BASIS IN THE SAN ANTONIO AREA TO FORECAST THE PROBABILITY OF OZONE FORMATION. IN THE EVENT WEATHER CONDITIONS INDICATE THAT EXCESSIVE OZONE MAY OCCUR, THE NATIONAL WEATHER SERVICE WORKING WITH THE TNRCC WILL ISSUE AN AIR STAGNATION AND OZONE ACTION DAY FOR THE FOLLOWING DAY. TNRCC ESTIMATES THAT APPROXIMATELY 25 OZONE ACTION DAYS MIGHT BE ISSUED DURING THE OZONE FORMATION SEASON. THE OZONE READINGS TAKEN DURING THESE ACTION DAYS ARE VERY CRITICAL TO FUTURE CONSTRUCTION FUNDS FOR THE SAN ANTONIO AREA; THEREFORE, ANY CONSTRUCTION OPERATIONS THAT ADVERSELY AFFECT THE READINGS NEED TO BE REDUCED.

ON OZONE ACTION DAYS, THE FOLLOWING CONSTRUCTION RESTRICTIONS WILL BE USED BETWEEN 6:00 AM AND 7:00 PM.

1. TEMPORARY LANE CLOSURES THAT HAVE THE POTENTIAL OF CREATING/INCREASING TRAFFIC CONGESTION WILL NOT BE ALLOWED

GENERAL NOTES AND SPECIFICATION DATA--

--ITEM 8--, CONT'D
THE POTENTIAL FOR TRAFFIC CONGESTION WILL BE AS DETERMINED BY THE ENGINEER, DEPENDING ON PROJECT LOCATION, NUMBER OF TRAVEL LANES, ADT, ETC.

2. CUTBACK ASPHALTS (MC OR RC ASPHALT) FOR SURFACE TREATMENT, PRIME OR TACK COATS, ETC., WILL NOT BE ALLOWED.
3. SOLVENT BASED MATERIALS FOR CONCRETE SURFACE TREATMENTS (TYPE I) AND FOR PAINTING STRUCTURAL STEEL WILL NOT BE ALLOWED.
4. HOT MIX COLD LAID (HMCL) AND/OR LIMESTONE ROCK ASPHALT (LRA) WILL NOT BE ALLOWED.
5. THE CONTRACTOR SHOULD AVOID/DECREASE THEIR USE OF SMALL GASOLINE ENGINES.

THE STATE WILL NOTIFY THE CONTRACTOR BY 4:00 PM THE DAY BEFORE THE OZONE ACTION DAY TO INFORM THEM OF THE RESTRICTIONS FOR THE FOLLOWING DAY AND TO REQUEST THEIR ASSISTANCE IN REDUCING ANY OTHER OPERATIONS THAT MAY CONTRIBUTE TO AN INCREASE IN THE OZONE READINGS. IF THESE RESTRICTIONS AFFECT THE CRITICAL ITEMS OF WORK PREVIOUSLY SCHEDULED BY THE CONTRACTOR, A WORKING DAY WILL NOT BE CHARGED. TIME CHARGES ON OZONE ACTION DAYS WILL BE AS DETERMINED BY THE ENGINEER FOR EACH ACTION DAY.

--ITEM 9--
WHEN DIRECTED/APPROVED BY THE ENGINEER, THE CONTRACTOR SHALL PROVIDE TWO (2) UNIFORMED, OFF-DUTY PEACE OFFICERS WITH TWO (2) PATROL CRUISERS DURING ANY WORK THAT REQUIRES A LANE TO BE CLOSED. THESE OFFICERS IN THE PATROL CRUISERS SHALL BE LOCATED AS APPROVED BY THE ENGINEER. AT LEAST ONE OFFICER AND CRUISER WILL MOVE WITH AND MONITOR TRAFFIC DURING THE LANE CLOSURE. ADDITIONAL OFFICERS AND CRUISERS MAY BE REQUIRED WHEN DIRECTED/APPROVED BY THE ENGINEER. THE OFFICERS WITH PATROL CRUISERS WILL BE PAID FOR THROUGH THE FORCE ACCOUNT PROCEDURES COVERED BY THE SPECIAL PROVISION TO THIS ITEM.

--ITEM 100--
THE CONTRACTOR SHALL NOT BEGIN ANY CLEARING OPERATIONS UNTIL THE ENGINEER HAS ESTABLISHED AND DEFINED THE TREES AND AREAS OF VEGETATION THAT SHOULD NOT BE REMOVED OR DISTURBED BY CONSTRUCTION ACTIVITIES.

ALL RIGHT OF WAY CLEARING OPERATIONS WILL BE COORDINATED WITH THE PROJECT'S SW3P.

THE CONTRACTOR MAY BE REQUIRED TO TRIM BRUSH AND TREE LIMBS TO A POINT APPROXIMATELY 600 MM INSIDE THE RIGHT OF WAY LINE, TO A CLEARANCE HEIGHT OF AT LEAST 4.0 M. NO VERTICAL FLAILING EQUIPMENT SHALL BE USED

GENERAL NOTES AND SPECIFICATION DATA--

--ITEM 100--, CONT'D
AND THE METHOD OF TRIMMING SHALL BE APPROVED BY THE ENGINEER. THE CUT LIMBS SHALL BE SPRAYED WITH PRUNING SPRAY. THE USE OF TAR BASED MATERIAL AS PRUNING SPRAY IS NOT ALLOWED. TO PREVENT POSSIBLE INFECTION FROM TREE TO TREE WHEN PRUNING LIVE OAK TREES, THE CONTRACTOR SHOULD DISINFECT THEIR PRUNING TOOLS WITH A RECOMMENDED SOLUTION OF 70% ISOPROPYL ALCOHOL BEFORE MOVING TO THE NEXT TREE.

REMOVAL OF EXISTING PAVEMENT SHALL BE AT THE DIRECTION OF THE ENGINEER. PORTIONS MAY REMAIN IN PLACE TO BE USED IN THE SUBGRADE FOR THE NEW ROADWAY.

--ITEM 110--
PRIOR TO CONTRACT LETTING, PROSPECTIVE BIDDERS MAY OBTAIN A FREE COMPUTER DISKETTE (FROM THE ENGINEER'S OFFICE) THAT CONTAINS THE EARTHWORK INFORMATION. IF THE CONTRACTOR WANTS COPIES OF THE ACTUAL CROSS-SECTIONS IN ADDITION TO OR INSTEAD OF THE DISKETTE, REPRODUCIBLE EARTHWORK CROSS-SECTIONS WILL BE AVAILABLE AT THE ENGINEER'S OFFICE FOR BORROWING BY COPYING-SERVICE COMPANIES FOR THE PURPOSE OF MAKING COPIES FOR THE PROSPECTIVE BIDDER AT THE BIDDER'S EXPENSE.

--ITEM 160--
ALL AREAS THAT RECEIVE TOPSOIL SHALL BE SEEDED, FERTILIZED AND WATERED.

--ITEMS 164,166,168--
THE SEEDED AREAS SHALL BE WATERED AND MAINTAINED FOR A PERIOD OF NOT LESS THAN 30 CALENDAR DAYS FOLLOWING PLANTING OR AS DIRECTED/APPROVED BY THE ENGINEER.

QUANTITIES SHOWN ON PLANS ARE BASED ON SEEDING OF ALL DISTURBED AREAS OUTSIDE OF THE ROADWAY AND WITHIN THE RIGHT OF WAY. AREAS NOT SCHEDULED FOR CONSTRUCTION BUT DISTURBED BY THE CONTRACTOR, SUCH AS STAGING AREAS SHALL BE ADDRESSED BY THE CONTRACTOR WITH THESE SAME ITEMS BUT AT THEIR EXPENSE.

FOR DRILL SEEDING PERMANENT WARM SEASON GRASSES: THE SEED DRILL SHALL BE CAPABLE OF PROPERLY STORING AND METERING THE RELEASE OF SMALL SEEDS (SUCH AS BERMUDA GRASS) SEPARATELY FROM FLUFFY TYPE SEEDS (SUCH AS BLUESTEM). DRILLS MANUFACTURED FOR PLANTING STANDARD GRAIN CROPS WILL NOT BE ACCEPTABLE.

GENERAL NOTES AND SPECIFICATION DATA--

--ITEM 247--
FLEXIBLE BASE MATERIAL SHALL COME FROM A SOURCE APPROVED BY THE ENGINEER. IF THE FLEXIBLE BASE COMES FROM A STOCKPILE, THE STOCKPILE SHALL BE TESTED BEFORE DELIVERY TO THE PROJECT. THE STOCKPILE SHALL BE BUILT IN LIFTS NOT TO EXCEED 600 MM AND IN A MANNER AS TO OBTAIN A MINIMUM WORKING FACE OF NOT LESS THAN 3 M AND A MAXIMUM WORKING FACE OF NOT MORE THAN 6 M. FINAL ACCEPTANCE OF FLEXIBLE BASE MATERIAL WILL BE FROM TESTS MADE FROM WINDROW SAMPLES AND/OR THE STOCKPILE.

--ITEM 316--
IT IS THE INTENT TO USE (AC-5 OR AC-10) LATEX, CRS-1P, CRS-2P OR HFRS-2P. MATERIAL RATES SHOWN ARE BASED ON AC AND MAY BE ADJUSTED BY THE ENGINEER DEPENDING ON THE MATERIAL USED. IN THE EVENT EMULSIONS ARE USED, A MINIMUM 24 HOUR CURING PERIOD SHALL ELAPSE BEFORE PLACING ANY SUBSEQUENT ASPHALT COURSES. BECAUSE OF THE REQUIRED CURING PERIOD, THE CONTRACTOR SHALL OBTAIN APPROVAL FROM THE ENGINEER BEFORE USING EMULSIONS.

WHEN USING LATEX ASPHALT, THE CONTRACTOR SHALL TAKE PRECAUTIONARY MEASURES TO AVOID DRIFTING OF ASPHALT ONTO TRAFFIC AND ADJACENT PROPERTIES.

THE CONTRACTOR WILL BE REQUIRED TO SET A STRING LINE FOR ALL SURFACE TREATMENT OPERATIONS UNLESS OTHERWISE APPROVED BY THE ENGINEER.

THE LOCATION OF AGGREGATE STOCKPILES AT THE PROJECT SHALL BE APPROVED BY THE ENGINEER. THE AGGREGATE SHALL BE FREE OF EXCESS SURFACE MOISTURE, AS DETERMINED BY THE ENGINEER, BEFORE APPLICATION.

IF THE AGGREGATES TO BE PRECOATED ARE FOUND TO HAVE STRIPPING CHARACTERISTICS, THE ENGINEER MAY REQUIRE THE ADDITION OF A LIME SLURRY. LIME MEETING THE REQUIREMENTS OF ITEM 264 SHALL BE ADDED TO THE AGGREGATE AT THE RATE OF 1% HYDRATED LIME BY MASS OF AGGREGATE. THE LIME SHALL BE ADDED TO THE AGGREGATE IN SLURRY FORM AT THE COLD FEED. THE COST OF THE LIME SHALL BE CONSIDERED SUBSIDIARY TO THIS ITEM. IF APPROVED BY THE ENGINEER, THE LIME SLURRY MAY BE ADDED AT THE STOCKPILE BUT NOT MORE THAN 24 HOURS IN ADVANCE OF USE.

IT SHALL BE THE CONTRACTOR'S RESPONSIBILITY TO ENSURE THAT THE ASPHALT USED FOR PRECOATING THE AGGREGATE AT THE PLANT AND THE ASPHALT USED FOR THE SURFACE TREATMENT AT THE PROJECT SITE WILL NOT RESULT IN A REACTION THAT MAY ADVERSELY EFFECT THE BONDING OF THE AGGREATE AND ASPHALT DURING THE SURFACE TREATMENT OPERATION.

GENERAL NOTES AND SPECIFICATION DATA--

--ITEM 316--, CONT'D
THE ADDITION OF BAGHOUSE FINES WILL NOT BE PERMITTED IN THE PRODUCTION OF PRECOATED MATERIAL.

MIXES THAT DO NOT MAINTAIN FLOW QUALITIES WHERE THE PRECOATED AGGREGATE CAN NOT BE SATISFACTORILY SPREAD BY APPROVED MECHANICAL SPREADING DEVICES WILL NOT BE ACCEPTABLE.

STOCKPILES OF AGGREGATE PRECOATED WITH AC MAY GENERATE EXCESSIVE HEAT BUILD-UP RESULTING IN DAMAGE TO THE ASPHALT AND/OR AGGREGATES IF ADEQUATE COOLING HAS NOT BEEN INITIALLY PROVIDED. STOCKPILES SHOWING EVIDENCE OF EXCESSIVE HEAT BUILD-UP CAN BE REJECTED BY THE ENGINEER.

ALL ROLLING SHALL BE IN ACCORDANCE WITH ITEM 213 (MEDIUM, TYPE B) AT THE APPROXIMATE RATE OF 1 H/3000 M2 OR AS DIRECTED/APPROVED BY THE ENGINEER. THE LIGHT PNEUMATIC ROLLER WILL BE ACCEPTABLE AT THE APPROXIMATE RATE OF 1 H/2000 M2. THE TIRE PRESSURE AND BALLAST OF ALL PNEUMATIC ROLLERS WILL BE OF CONTINUING INTEREST BY THE ENGINEER, AND WILL BE IN ACCORDANCE WITH ITEM 213.

ALL CONCRETE CURBS AND/OR CONCRETE ISLANDS THAT GET COATED WITH OIL DURING THE SURFACE TREATMENT OPERATION SHALL BE CLEANED AS DIRECTED/APPROVED BY THE ENGINEER PRIOR TO FINAL ACCEPTANCE OF THE PROJECT.

GENERAL NOTES AND SPECIFICATION DATA--

--ITEM 345--
RAW BASE MATERIAL SHALL BE STOCKPILED, TESTED AND APPROVED BEFORE USE. THE STOCKPILE SHALL BE BUILT IN LIFTS NOT TO EXCEED 600 MM AND IN SUCH A MANNER AS TO OBTAIN A MINIMUM WORKING FACE OF NOT LESS THAN 3 M AND A MAXIMUM WORKING FACE OF NOT MORE THAN 6 M. IF THE ASPHALT STABILIZED BASE IS PRODUCED FROM AN APPROVED FLEXIBLE BASE STOCKPILE, UP TO 15 PERCENT OF FIELD SAND, AS DIRECTED BY THE ENGINEER, MAY BE REQUIRED TO BE ADDED TO THE MATERIAL THROUGH THE COLD FEED SYSTEM.

FOR ALL MAT THICKNESSES, ASPHALT STABILIZED BASE SHALL NOT BE PLACED WHEN THE TEMPERATURE OF THE SURFACE ON WHICH THE MAT IS TO BE PLACED IS BELOW 10 DEGREES C.

THE DESIGN SHALL BE IN ACCORDANCE WITH TEST METHOD TEX-126-E.

WHEN IN-PLACE DENSITY IS REQUIRED, IT SHALL BE MEASURED WITH THE NUCLEAR GAUGE; HOWEVER, THE CONTRACTOR WILL BE REQUIRED TO REMOVE THREE (3) EACH, 102 MM DIAMETER UNDISTURBED CORES FOR THE FULL DEPTH OF THE PREVIOUS DAY'S PLACEMENT, AT A POINT DIRECTED/APPROVED BY THE ENGINEER, FOR CORRELATION. THIS REQUIREMENT FOR UNDISTURBED CORES MAY BE LATER WAIVED, IF CORRELATIONS PROVE SATISFACTORY. THE MATERIALS SHALL BE COMPACTED TO THE PERCENT DENSITY SHOWN IN TEST METHOD TEX-126-E.

THE STRIPPING CHARACTERISTIC OF THE ASPHALT STABILIZED BASE WILL BE TESTED ACCORDING TO TEST METHOD TEX-530-C (BOIL TEST). THE MAXIMUM STRIPPING IN THE PRODUCED MIXTURE WILL BE ZERO PERCENT UNLESS OTHERWISE APPROVED BY THE ENGINEER.

IF THE MATERIALS FURNISHED ARE FOUND TO HAVE STRIPPING CHARACTERISTICS, THE ENGINEER MAY REQUIRE THE ADDITION OF AN APPROVED ANTISTRIPPING AGENT CONFORMING TO THE REQUIREMENTS OF ITEM 301. THE USE OF TEST METHOD TEX-531-C SHALL NOT BE REQUIRED TO EVALUATE THE MIX. THE COST OF THE ANTISTRIPPING AGENT SHALL BE CONSIDERED SUBSIDIARY TO THIS ITEM. A TEST SECTION WITHOUT THE ANTISTRIPPING AGENT WILL NOT BE REQUIRED.

NO COMMERCIAL OR CONTRACTOR'S R.A.P. WILL BE ALLOWED IN THE MIXTURE UNLESS APPROVED OTHERWISE IN ADVANCE BY THE ENGINEER.

THE ASPHALT PLANT SHALL BE EQUIPPED WITH TRUCK SCALES AS DEFINED IN SUBARTICLE 520.3(1) OF THE STANDARD SPECIFICATIONS. THREE MASS TICKETS BEARING THE DATE, THE TRUCK NUMBER AND THE GROSS, NET AND TARE MASS SHALL BE GIVEN THE TRUCK DRIVER BY THE CONTRACTOR'S OR PLANT PERSONNEL, AND THEN GIVEN TO THE STATE INSPECTOR AT THE PROJECT SITE. THE CONTRACTOR MAY BE REQUIRED TO RE-WEIGH LOADS OF ASPHALT STABILIZED BASE ON PUBLIC SCALES OR PORTABLE PLATFORM SCALES TO CHECK THE MASS OF THE MATERIAL.

GENERAL NOTES AND SPECIFICATION DATA--

--ITEM 351
THE EXISTING ACP WILL BE REQUIRED TO BE SAWCUT BY THE CONTRACTOR BEFORE REPAIRING THE FLEXIBLE PAVEMENT STRUCTURE AS DIRECTED/APPROVED BY THE ENGINEER. THE SAW CUTTING WILL NOT BE PAID FOR DIRECTLY, BUT SHALL BE CONSIDERED SUBSIDIARY TO THIS ITEM.

THE LOCATIONS SHOWN FOR FLEXIBLE PAVEMENT REPAIR ARE APPROXIMATE AND ARE SUBJECT TO CHANGE IN THE FIELD AS DIRECTED BY THE ENGINEER.

ALL MATERIALS REMOVED UNDER THIS ITEM SHALL BECOME THE PROPERTY OF THE CONTRACTOR.

--ITEM 354--
ALL THE MATERIAL (RAP) REMOVED BY THIS ITEM SHALL BE SOLD TO THE CONTRACTOR AS A CREDIT ITEM. THE CONTRACTOR MUST HAVE ALL MATERIAL REMOVED FROM THE PROJECT SITE PRIOR TO FINAL ACCEPTANCE OF THE PROJECT. THIS ITEM COVERS PAYMENT FOR APPROXIMATELY 100 CUBIC METERS OF MATERIAL.

--ITEM 420--
ALL BENT CONCRETE WILL BE MEASURED FOR PAYMENT AS PLAN QUANTITY.

CONCRETE USED FOR THE FOLLOWING TYPE OF WORK WILL BE CONSIDERED TO BE "MISCELLANEOUS CONCRETE"; RIPRAP, CONCRETE CURB & SIDEWALKS.

--ITEMS 421 & 427--
ALL SURFACE FINISHES FOR CONCRETE SHALL RECEIVE A SURFACE AREA I, CLASS B, (TY 1) FINISH.

--ITEMS 421 & 520--
AFTER THE CONCRETE PRODUCER CONTACTS THE DISTRICT CONCRETE LABORATORY OR THE AREA ENGINEER'S OFFICE (WHEN OUTSIDE THE SAN ANTONIO AREA) TO REQUEST A TXDOT INSPECTOR AT THE CONCRETE BATCH PLANT, TXDOT WILL DETERMINE IF AN INSPECTOR CAN BE SCHEDULED. IF AN INSPECTOR IS NOT AVAILABLE, TXDOT WILL NOTIFY THE PRODUCER. AT THAT TIME, IF THE CONCRETE PRODUCER HAS A TXDOT APPROVED CONCRETE BATCH TICKET AND THE CONCRETE REQUESTED BY THE CONTRACTOR IS NOT FOR DRILL SHAFTS, COLUMNS, CAPS, ABUTMENTS, BRIDGE DECKS OR TOP SLAB OF A DIRECT TRAFFIC CULVERT. THE PRODUCER WILL BE ALLOWED TO BATCH THE CONCRETE WITHOUT A TXDOT INSPECTOR BEING PRESENT.

GENERAL NOTES AND SPECIFICATION DATA--

--ITEMS 421 & 520--, CONT'D
THE CONCRETE PRODUCERS WILL BE REQUIRED TO DEVELOP A CONCRETE BATCH TICKET THAT WILL CONTAIN THE SAME INFORMATION AS TXDOT'S CONCRETE BATCH TICKET. THE PRODUCER'S TICKET CAN BE A PRE-PRINTED FORM WHERE THE BATCH INFORMATION IS ENTERED BY HAND LEGIBLY, OR A COMPUTER PRINTOUT. THE PRODUCER'S TICKET SHALL BE SUBMITTED TO TXDOT FOR APPROVAL PRIOR TO USE. IT WILL BE THE CONTRACTOR'S RESPONSIBILITY TO INFORM THEIR CONCRETE PRODUCER OF THIS REQUIREMENT.

USE OF THE APPROVED TICKET IS RECOMMENDED BUT NOT REQUIRED FOR BATCHING MISCELLANEOUS CONCRETE. CONCRETE FOR DRILL SHAFTS, COLUMNS, CAPS, ABUTMENTS, BRIDGE DECKS OR TOP SLABS OF DIRECT TRAFFIC CULVERTS SHALL BE BATCHED IN THE PRESENCE OF A TXDOT INSPECTOR USING PRODUCER'S TICKET AND/OR TXDOT'S CONCRETE BATCH TICKET.

--ITEM 427--
TO INSURE THAT THE CLASS B (PAINT TYPE) CONCRETE FINISH MEETS ALL SPECIFIED REQUIREMENTS, RANDOM TEST SAMPLES MAY BE TAKEN DURING ACTUAL APPLICATION AND FORWARDED TO TXDOT'S MATERIALS AND TEST DIVISION FOR TEST CONFIRMATION.

--ITEM 432--
IN ALL RIPRAP SLOPES, 75 MM DIAMETER WEEP HOLES SHALL BE PROVIDED 3 M MAXIMUM SPACING AND BACKED WITH LOOSE GRADED GRAVEL OR CRUSHED STONE AND GALVANIZED HARDWARE CLOTH AS DIRECTED/APPROVED BY THE ENGINEER.

IN AREAS WHERE GUARD FENCE POSTS ARE TO BE PLACED IN RIPRAP, THE RIPRAP SHALL HAVE A BLOCKED OUT AREA AT LEAST 300 MM LARGER THAN THE POST.

RIPRAP APRONS USED AT SIGN LOCATIONS ARE FOR THE PURPOSE OF EROSION CONTROL AROUND DRILL SHAFT FOOTINGS. THE DETAIL SHOWN ON THE PLANS IS TYPICAL AND MAY BE MODIFIED TO MINIMIZE EROSION. THESE MODIFICATIONS MAY INCLUDE EXTENDING THE RIPRAP APRON TO THE EDGE OF THE SHOULDER OR CURB AND WHERE SIGNS ARE TO BE PLACED SIDE BY SIDE AS APPROVED BY THE ENGINEER.

ALL RIPRAP SHALL BE 100 MM THICK, UNLESS OTHERWISE NOTED ON THE PLANS.

--ITEM 442
ALL ARMOR JOINTS SHALL RECEIVE PROTECTION SYSTEM II.

ALL STRUCTURAL STEEL SHALL RECEIVE PROTECTION SYSTEM II.

GENERAL NOTES AND SPECIFICATION DATA--

--ITEM 450--
PRIOR TO ORDERING MATERIALS, THE CONTRACTOR SHALL ACCOMPANY THE ENGINEER TO VERIFY LOCATIONS, LENGTHS AND RADIUS OF THE CURB RAMP HANDRAIL.

--ITEM 454--
ALL SEALED EXPANSION JOINTS SHALL RECEIVE PROTECTION SYSTEM I OR II IN ACCORDANCE WITH ITEM 446.

--ITEM 462--
IF PRECAST UNITS ARE USED, THE CEMENT STABILIZED BACKFILL BETWEEN THE BOXES SHALL CONSIST OF CONCRETE AGGREGATE AND A MINIMUM OF 100 KG PORTLAND CEMENT PER CUBIC METER.

THE PRECAST CULVERT END UNITS SHALL BE TIED TO THE CAST-IN-PLACE WINGS AS SHOWN IN THE PLANS OR IN A MANNER APPROVED BY THE ENGINEER.

--ITEM 464--
THE CONTRACTOR SHALL USE CLASS "B" BEDDING AS SHOWN ON ITEM 400 OR AS DIRECTED BY THE ENGINEER.

--ITEM 465--
THE FOLLOWING INLETS SHALL BE PRECAST:

DROP INLET(S) -- 2B, 2D & 2C
CURB INLET(S) -- 2E1, 2E, 2F, 2G, & 2H

--ITEM 500--
"MATERIALS ON HAND" PAYMENTS WILL NOT BE CONSIDERED IN DETERMINING PERCENTAGES USED TO COMPUTE PAYMENT FOR ITEM "MOBILIZATION".

--ITEM 502--
STANDARD SHEET TCP(7-1)-97(M) REQUIRES THAT CERTAIN SIGNS ARE TO REMAIN IN PLACE UNTIL THE STANDARD PAVEMENT MARKINGS ARE PLACED. THE STANDARD MARKINGS SHOULD BE IN PLACE NO LONGER THAN 14 DAYS AFTER SURFACE TREATMENT OPERATIONS ARE COMPLETED.

WHEN ADVANCED WARNING FLASHING ARROW PANEL(S) IS/ARE SPECIFIED FOR USE ON THE PROJECT, THE CONTRACTOR SHALL BE REQUIRED TO FURNISH ONE STANDBY UNIT IN GOOD CONDITION AT THE JOB SITE READY FOR IMMEDIATE USE.

GENERAL NOTES AND SPECIFICATION DATA--

--ITEM 502--, CONT'D

THE CONTRACTOR SHALL PROVIDE TRUCK MOUNTED ATTENUATORS ON ALL SHADOW VEHICLES IN ACCORDANCE WITH THE TCP, B&C AND TEXAS MUTCD. THE TRUCK MOUNTED ATTENUATORS SHALL BE ONE OF THE FOLLOWING MODELS OR APPROVED EQUAL:

1) ALPHA 1000 MANUFACTURED BY ENERGY ABSORPTION SYSTEMS, INC.
2) REN-GARD CK-1128 MANUFACTURED BY RENCO, INC.
3) SYRO-45 MANUFACTURED BY SYRO/TRINITY

STRIPING, IF USED, ON THE BACK OF ALL TRUCK MOUNTED ATTENUATORS SHALL BE 200 MM RED AND WHITE STRIPES PLACED IN AN INVERTED "V" DESIGN. SHEETING SHALL CONFORM WITH DEPARTMENTAL MATERIALS SPECIFICATION D-9-8300, TYPE C.

THE CONTRACTOR IS FULLY RESPONSIBLE FOR THE TRAFFIC CONTROL AND WILL BE RESPONSIBLE FOR FURNISHING ALL NECESSARY SIGNS, CONES, BARRICADES, AND FLAGGERS. THE CONSTRUCTION METHODS SHALL BE CONDUCTED TO PROVIDE THE LEAST POSSIBLE INTERFERENCE TO TRAFFIC SO AS TO PERMIT THE CONTINUOUS MOVEMENT OF TRAFFIC IN ALL ALLOWABLE DIRECTIONS AT ALL TIMES. THE CONTRACTOR SHALL CLEAN UP AND REMOVE FROM THE WORK AREA ALL LOOSE MATERIAL RESULTING FROM CONTRACT OPERATIONS AT THE END OF EACH WORK DAY. WHEN PLACING LOOP DETECTORS ACROSS THE ROADWAY AT LEAST ONE LANE SHALL REMAIN OPEN AT ALL TIMES.

THERE ARE EXISTING TRAFFIC SIGNALS PRESENTLY IN OPERATION AT LOOP 1604 WITH BRAUN ROAD AND BOWEN'S CROSSING. THE EXISTING TRAFFIC SIGNALS SHALL REMAIN IN OPERATION AT ALL TIMES EXCEPT WHEN NECESSARY TO BE TURNED OFF FOR SPECIFIC INSTALLATION OPERATIONS. WHENEVER IT IS NECESSARY FOR THE SIGNALS TO BE TURNED OFF, THE CONTRACTOR SHALL HIRE OFF DUTY POLICE OFFICERS TO CONTROL THE TRAFFIC UNTIL THE SIGNALS ARE BACK IN SATISFACTORY CONDITION.

AFTER THE CONTRACTOR HAS BEEN NOTIFIED IN WRITING BY THE ENGINEER, THE TIME FRAME FOR THE CONTRACTOR TO PROVIDE PROPERLY MAINTAIN SIGNS AND BARRICADES IN COMPLIANCE WITH THE CONTRACT REQUIREMENTS, BEFORE THEY ARE CONSIDERED TO BE IN NON-COMPLIANCE WITH THIS ITEM, IS 48 HOURS REGARDLESS OF THE DAYS OF THE WEEK INVOLVED. IF THE CONTRACTOR DOESN'T TAKE THE NECESSARY STEPS APPROVED BY THE ENGINEER TO ELIMINATE THE NON-COMPLIANCE CONDITIONS WITHIN THE 48 HOURS ESTABLISHED ABOVE, NO PAYMENT WILL BE MADE FOR THIS ITEM FOR THE MONTH(S) IN NON-COMPLIANCE AS COVERED IN SECTION 502.4(7).

GENERAL NOTES AND SPECIFICATION DATA--

--ITEM 504--
THE CONTRACTOR WILL BE REQUIRED TO FURNISH ONE FIELD OFFICE TYPE E. THE TYPE E FIELD OFFICE AND LABORATORY SHALL BE AT LEAST 65 M2 IN SIZE AND SHALL BE PARTITIONED INTO AT LEAST 5 WORKROOMS. THE FIELD OFFICE AND LABORATORY MAY BE FURNISHED SEPARATELY WITH THE FIELD OFFICE CONTAINING AT LEAST 55 M2 PARTITIONED INTO AT LEAST 4 WORKROOMS. THE FIELD OFFICE SHALL HAVE ADEQUATE WINDOWS AND DOORS, SHALL BE PROVIDED WITH THE NECESSARY PLAN TABLES, SHELVES, AND LOCKERS REQUIRED AND CONSTRUCTED AS DIRECTED/APPROVED BY THE ENGINEER, AND SHALL CONTAIN THE FACILITIES OF A TOILET AND LAVATORY. THE LABORATORY BUILDINGS SHALL BE SERVICED WITH ADEQUATE SINK AND DRAINAGE CONNECTIONS AND SHALL BE PROVIDED WITH NECESSARY WORK TABLES, SHELVES, WEIGHT TABLES, AND LOCKERS REQUIRED AND CONSTRUCTED AS DIRECTED/APPROVED BY THE ENGINEER.

IF THE CONTRACTOR OBTAINS THE ASPHALTIC MATERIAL FROM A SOURCE OTHER THAN A COMMERCIAL SOURCE PRESENTLY INSPECTED BY TXDOT, THE CONTRACTOR SHALL FURNISH A TYPE D STRUCTURE FOR THE ASPHALT MIX CONTROL LABORATORY FOR THE ENGINEER'S EXCLUSIVE USE. IN ADDITION TO THE REQUIREMENTS OF ITEM 504, THIS STRUCTURE SHALL HAVE A MINIMUM HEIGHT OF 2.4 M AND PROVIDE A MINUMUM OF 37 M2 OF GROSS FLOOR AREA FOR PERMANENTLY LOCATED ASPHALT PLANTS OR 18.6 M2 FOR TEMPORARY LOCATED PLANTS SERVING ONE PROJECT. THE FLOOR AREA WILL BE PARTITIONED INTO A MINIMUM OF TWO INTERCONNECTED ROOMS, EACH ROOM FURNISHED WITH AN EXTERIOR DOOR AND A MINIMUM OF TWO WINDOWS. THE FLOOR SHALL HAVE SUFFICIENT STRENGTH TO SUPPORT THE TESTING EQUIPMENT AND HAVE AN IMPERVIOUS COVERING.

THE TYPE D STRUCTURE SHALL BE ADEQUATELY AIR CONDITIONED AND BE FURNISHED WITH A MINIMUM OF ONE DESK, THREE CHAIRS, ONE FILE CABINET, A TELEPHONE AND ONE BUILT-IN EQUIPMENT STORAGE CABINET FOR THE STORAGE OF NUCLEAR EQUIPMENT. THE CABINET SHALL BE A MINIMUM OF 0.9 M WIDE BY 0.6 M DEEP BY 0.9 M HIGH AND SHALL HAVE PROVISIONS FOR LOCKING SECURELY. THE STRUCTURE SHALL BE PROVIDED WITH A 240 VOLT ELECTRICAL ENTRANCE SERVICE UTILIZING A MINIMUM OF THREE NO. 4 WIRES. THE SERVICE SHALL CONSIST OF A MINIMUM OF FOUR 120 VOLT CIRCUITS WITH 20 AMP BREAKERS AND NO MORE THAN TWO GROUNDED CONVENIENCE OUTLETS PER CIRCUIT AND PROVISIONS FOR A MINIMUM OF TWO 220 VOLT OVENS WITH VENTS TO THE OUTSIDE. THE STRUCTURE SHALL HAVE A MINIMUM OF 2 CONVENIENCE OUTLETS PER WALL, AND A UTILITY SINK WITH AN ADEQUATE CLEAN POTABLE WATER SUPPLY FOR TESTING. SPACE HEATERS FOR HEATING THE STRUCTURE ARE UNACCEPTABLE. PORTABLE STRUCTURES SHALL BE SUPPORT BLOCKED FOR STABILITY AND SHALL BE TIED DOWN.

ASPHALT CONTENT WILL BE DETERMINED UTILIZING THE IGNITION METHOD SO THE STRUCTURE SHALL PROVIDE FOR THE FOLLOWING IN LIEU OF THE ITEM 504 REQUIREMENTS FOR ASPHALT CONTENT BY EXTRACTION. THE ROOM TO CONTAIN

GENERAL NOTES AND SPECIFICATION DATA--

--ITEM 504--, CONT'D
THE IGNITION OVEN SHALL BE ADEQUATELY POWER VENTILATED AND CONTAIN A NEMA 6-50R (208/240 V, 50 A) OUTLET WITHIN 0.7 M OF THE IGNITION OVEN LOCATION AND AN INDEPENDENT EXHAUST OUTLET TO THE OUTSIDE NO FURTHER THAN 2.4 M FROM THE OVEN. THE SURFACE FOR THE IGNITION OVEN LOCATION SHALL BE LEVEL, STURDY, AND FIRE-PROOF WITH AT LEAST 0.15 M CLEARANCE BETWEEN THE FURNACE AND OTHER VERTICAL SURFACES.

THE CONTRACTOR WILL BE RESPONSIBLE FOR PROVIDING THE NECESSARY OFFICE FURNITURE CONSISTING OF DESKS, CHAIRS, FILING CABINETS, ETC., AS DIRECTED/APPROVED BY THE ENGINEER.

THE CONTRACTOR WILL BE REQUIRED TO CLEAN THE FIELD OFFICE AND/OR LABORATORY AS NEEDED BUT NO LESS THAN ONCE A WEEK. THIS WILL INCLUDE, BUT NOT LIMITED TO SWEEPING AND MOPPING FLOORS, CLEANING THE TOILET AND LAVATORY, AND EMPTYING WASTE BASKETS.

THE CONTRACTOR WILL BE REQUIRED TO PROVIDE A STORAGE AREA INSIDE THE FIELD OFFICE FOR OFFICE TECHNICAL EQUIPMENT AS DIRECTED/APPROVED BY THE ENGINEER. THE STORAGE AREA SHALL BE A MINIMUM OF 6 M3 AND SHALL BE REASONABLY SECURE FROM FORCED ENTRY OR REMOVAL FROM THE PREMISES.

THE FIELD OFFICE PARKING AREA SHALL BE OF ADEQUATE MATERIAL, SHAPE AND SIZE TO ACCOMMODATE 8 VEHICLES AS APPROVED BY THE ENGINEER. WHEN DIRECTED BY THE ENGINEER (DEPENDING ON THE LOCATION), THE FIELD OFFICE AND THE PARKING AREA SHALL BE ENCLOSED WITH A FENCE AS DESCRIBED IN THIS ITEM.

--ITEM 512--
ALL CONTRACTOR SUPPLIED PORTABLE CONCRETE TRAFFIC BARRIER SHALL BE PRECAST, SINGLE SLOPE CONCRETE BARRIER (TY 2), BARRIER HEIGHT 1070 MM, WITH DRAINAGE SLOTS, WITH DROP-IN "REBAR GRID" CONNECTORS, AS DETAILED ON STANDARD SHEET SSCB(2)-95(M).

WHEN THE BARRIERS ARE NO LONGER NEEDED ON THE PROJECT, THE CONTRACTOR SHALL REMOVE THE BARRIERS, TRANSPORT AND STOCKPILE THEM AT THE STORAGE SITE LOCATED AT FM 1957 & LP 1604.

CTB DAMAGED DURING LOADING, UNLOADING AND USE ON THE PROJECT SHALL BE REPAIRED OR REPLACED AS DIRECTED BY THE ENGINEER. THE REPAIRS OR REPLACEMENTS SHALL BE MADE BY THE CONTRACTOR AT THE CONTRACTOR'S EXPENSE.

COMMERCIALLY PRODUCED REFLECTOR TABS APPROVED BY THE ENGINEER SHALL BE PLACED ON TOP OF THE CTB'S AT 9 M INTERVALS. COST FOR FURNISHING AND

GENERAL NOTES AND SPECIFICATION DATA--

--ITEM 512--, CONT'D
PLACING THESE TABS IS CONSIDERED SUBSIDIARY TO THIS ITEM.

--ITEM 529--
CLASS "C" CONCRETE WILL BE REQUIRED FOR EXTRUDED CURB.

--ITEMS 529 & 531--
CONCRETE TEST BEAMS WILL NOT BE REQUIRED FOR CURB AND/OR SIDEWALK CONSTRUCTION.

--ITEM 530--
DRIVEWAY LOCATIONS SHOWN ARE SUBJECT TO CHANGE IN THE FIELD AT THE DIRECTION OF THE ENGINEER.

--ITEM 540--
TIMBER POSTS SHALL HAVE BEVELED TOPS AND SHALL NOT BE PAINTED.

GUARD FENCE POSTS TO BE PLACED IN AREAS OF RIPRAP, SIDEWALKS OR ANY OTHER CONCRETE SHALL HAVE A BLOCKED OUT AREA AT LEAST 300 MM LARGER THAN THE POST SIZE. AFTER THE GUARD FENCE IS INSTALLED, THE BLOCKED OUT AREA AROUND THE POST SHALL BE BACKFILLED WITH AN ASPHALTIC MIXTURE, APPROVED BY THE ENGINEER, FOR A DEPTH EQUAL TO THE CONCRETE DEPTH.

THE NOMINAL POST LENGTH SHALL BE 1830 MM INSTEAD OF THE 1695 MM DETAILED ON THE MBGF STANDARD SHEET. THIS ADDITIONAL POST LENGTH IS REQUIRED FOR RAIL HEIGHT ADJUSTMENT ON A FUTURE ACP OVERLAY PROJECT.

--ITEM 542--
ALL EXISTING METAL BEAM GUARD FENCE ELEMENTS AND HARDWARE REMOVED BY THE CONTRACTOR AND DETERMINED TO BE SALVAGEABLE MATERIAL BY THE ENGINEER SHALL REMAIN THE PROPERTY OF THE STATE AND BE PLACED ALONG THE RIGHT OF WAY FOR REMOVAL BY THE STATE MAINTENANCE FORCES AS DIRECTED BY THE ENGINEER. NON-SALVAGEABLE MATERIAL WILL BE DISPOSED OF BY THE CONTRACTOR AT THEIR EXPENSE.

--ITEM 610--
SHOP DRAWINGS FOR ROADWAY ILLUMINATION ASSEMBLIES ARE REQUIRED TO BE SEALED BY A PROFFESIONAL ENGINEER REGISTERED IN THE STATE OF TEXAS.

GENERAL NOTES AND SPECIFICATION DATA--

--ITEM 611--
WHEN THE EXISTING BALLAST IS LOCATED IN THE BASE OF THE ASSEMBLY, THIS BALLAST SHALL BE REMOVED AND BECOME THE PROPERTY OF THE STATE.

MATERIALS (POLES, ARMS, HEADS AND HARDWARE) SHALL REMAIN THE PROPERTY OF THE STATE. THE MATERIALS SHALL BE STOCKPILED AT A SAFE AND SECURE LOCATION WITHIN THE LIMITS OF THE PROJECT UNTIL ALL THE MATERIALS ARE READY TO BE DELIVERED BY THE CONTRACTOR TO TXDOT'S QUINTANA ROAD STORAGE SITE, AS DIRECTED BY THE ENGINEER.

WHEN THE CONTRACTOR REMOVES A MERCURY VAPOR LUMINAIRE FROM SERVICE, THE CAPACITOR(S) INSIDE THE ILLUMINATION ASSEMBLY SHALL BE REMOVED BY THE CONTRACTOR. IT MUST BE ASSUMED THAT ALL THESE CAPACITORS CONTAIN POLYCHLORINATED BIPHENYLS (PCB'S) UNLESS A NOTATION APPEARS ON THE OUTSIDE FACE THAT SPECIFICALLY STATES THAT THE CAPACITOR DOES NOT CONTAIN PCB'S. ALL SMALL (1.36 KG OR LESS) CAPACITORS WITH PCB'S SHALL BE PLACED IN DESIGNATED 208.190 L DRUM(S) THAT SHALL BE FURNISHED BY THE CONTRACTOR. THIS SHALL ALSO APPLY TO THE CAPACITORS CONTAINED IN THE GROUND BOXES WHERE SHOWN ON PLANS. A LID MUST PROVIDED TO PREVENT RAIN FROM ENTERING THE DRUM. THE CONTRACTOR SHALL FURNISH AND ATTACH/PLACE THE OFFICIAL PCB LABEL(S) ON THE OUTSIDE OF THE DRUM(S). A DRUM SHALL NOT BE FILLED TO MORE THAN 3/4 OF ITS CAPACITY.

CARE SHOULD BE TAKEN TO AVOID RUPTURING THE CAPACITOR(S). IF A CAPACITOR IS RUPTURED, PROPER PROCEDURES AND PERSONNEL PROTECTIVE EQUIPMENT SHALL BE REQUIRED FOR THE CLEAN-UP OPERATION. SPECIALIST TRAINED AND EQUIPPED TO HANDLE PCB CONTAMINANTS SHOULD HANDLE THE ACTUAL CLEAN-UP OPERATION.

THE PCB CAPACITORS IN THE PROPERLY LABELED DRUM CONTAINERS WILL BECOME THE PROPERTY OF THE STATE. THE CONTRACTOR WILL PLACE THE DRUM(S) IN AN AREA WHERE IT IS PROTECTED FROM DAMAGE AND THE ELEMENTS. THE CONTRACTOR WILL NOTIFY THE ENGINEER WHEN THE DRUM(S) IS/ARE READY FOR TRANSPORT AND THE ENGINEER WILL MAKE THE NECESSARY ARRANGEMENTS FOR TXDOT MAINTENANCE FORCES TO TRANSPORT THE DRUM(S) TO A DEPARTMENT OWNED STORAGE SITE FOR PROPER DISPOSAL AT A LATER DATE. THE CAPACITORS REMOVAL AND STORAGE IN THE CONTRACTOR PROVIDED DRUM(S) WILL NOT BE PAID FOR DIRECTLY BUT WILL BE CONSIDERED SUBSIDIARY WORK TO THIS ITEM.

--ITEM 618--
ALL UNDERGROUND CONDUIT BENDS 45 DEGREES OR MORE IN PVC CONDUIT SYSTEMS, INCLUDING BENDS INTO GROUND BOXES, SHALL BE MADE WITH RIGID METAL CONDUIT. WHERE THE RIGID METAL CONDUIT IS EXPOSED AT ANY POINT AND WHERE RIGID METAL CONDUIT EXTENDS INTO GROUND BOXES, THE METAL CONDUIT SHALL BE BONDED TO THE GROUNDING CONDUCTOR WITH GROUNDING TYPE

GENERAL NOTES AND SPECIFICATION DATA--

--ITEM 618--, CONT'D
BUSHINGS OR BY OTHER UL LISTED GROUNDING CONNECTORS APPROVED BY THE ENGINEER. RIGID METAL BENDS SHALL NOT BE PAID FOR SEPERATELY BUT SHALL BE INCIDENTAL TO THE PVC CONDUIT SYSTEM.

--ITEM 620--
ALL ELECTRICAL CONNECTORS FOR BREAKAWAY POLES SHALL BE BREAKAWAY (BUCHANNAN 65U, BUSSMANN HEBW, LITTELFUSE LEB, OR EQUAL) IN ACCORDANCE WITH RID(2)-93A(M). ALL ELECTRICAL CONNECTIONS FOR NEUTRALS SHALL BE BREAKAWAY AND SHALL HAVE A WHITE COLOR MARKING AND A PERMANENTLY INSTALLED SOLID NEUTRAL (BUCHANNAN 20U, BUSSMANN HET, LITTELFUSE LET, OR EQUAL).

--ITEM 624--
CONCRETE APRONS SHALL BE PLACED AROUND ALL GROUND BOXES INSTALLED IN SODDED AREAS OR AS DIRECTED BY THE ENGINEER.

GROUND BOXES USED FOR THE TRAFFIC SIGNALS SHALL BE AS SHOWN ON THE ELECTRICAL DETAIL STANDARD SHEET, ED(2)-93A(M). THE COVER SHALL BE CONSTRUCTED OF POLYMER CONCRETE AND SHALL BE LEGIBLY IMPRINTED WITH THE WORDS "TRAFFIC SIGNALS" IN MINIMUM 50 MILLIMETER LETTERS.

--ITEM 628--
ED(3)-93A(M) REQUIRES THAT THE ENCLOSURE AND DISCONNECT COMBINATION BE RATED AS SERVICE ENTRANCE EQUIPMENT. THE MERE ASSEMBLANCE OF UL LISTED COMPONENTS DOES NOT MEET THIS REQUIREMENT AND WILL NOT BE ACCEPTED. THE ENCLOSURE AND DISCONNECT COMBINATION MUST HAVE A UL LABEL STATING "ENCLOSED INDUSTRIAL CONTROL PANEL" OR OTHER WORD INDICATING THAT THE PANEL ASSEMBLY IS UL LISTED.

THE DISCONNECT OPERATING HANDLE FOR THE SERVICE ENCLOSURE SHALL BE FLANGE MOUNTED, NOT DOOR MOUNTED AND WILL LATCH THE DOOR WHEN THE SWITCH IS IN THE CLOSED POSITION. THE HANDLE SHALL BE LOCKABLE IN BOTH OPEN AND CLOSED POSITIONS.

EACH SIGNAL INSTALLATION WILL REQUIRE A 120/240 VOLT ELECTRICAL POWER SERVICE. THE ENTIRE SIGNAL SYSTEM SHALL BE GROUNDED WITH A 1/C#8 BARE A.W.G. FROM SERVICE TO THE CONTROLLER AND FROM THE CONTROLLER TO THE SIGNAL POLES.

THE PROPOSED ELECTRICAL SERVICE SHALL BE CONSTRUCTED AS SHOWN ON ED(3)-93A(M) AND ON ED(4)-93A(M), AS SHOWN IN THE ELECTRICAL SERVICE DATA SUMMARY AND IN ACCORDANCE WITH ITEM 628, "ELECTRICAL

GENERAL NOTES AND SPECIFICATION DATA--

--ITEM 628--, CONT'D
SERVICES". THE CONTRACTOR WILL BE RESPONSIBLE FOR MAKING ALL ARRANGEMENTS FOR ELECTRICAL SERVICE, AND COMPLIANCE WITH LOCAL STANDARDS AND PRACTICES FOR PROPER INSTALLATIONS.

--ITEM 656--
THE FOUNDATION FOR THE CONTROLLER ASSEMBLY SHALL BE PROVIDED BY THE CONTRACTOR USING THE ANCHOR BOLTS AND TEMPLATE SUPPLIED BY THE CITY. THE CONTRACTOR SHALL DEMONSTRATE TO THE ENGINEER'S SATISFACTION THAT THE FIELD WIRING IS PROPERLY INSTALLED AND THE CITY FORCES SHALL THEN INSTALL THE CONTROLLER ASSEMBLY ON THE COMPLETED FOUNDATION. THE CITY FORCES WILL CONNECT THE FIELD WIRING TO THE CONTROLLER, SET UP, AND TURN ON THE CONTROLLER.

--ITEMS 658 & 660--
DELINEATORS SHALL MAINTAIN A UNIFORM PROJECTION OF 915 MM, WHICH IS FROM THE TOP OF THE WINGED CHANNEL TO THE PAVEMENT AND/OR EDGE OF SHOULDER.

THE 2.1 M WINGED CHANNEL POST SHALL BE USED FOR ALL DELINEATORS NOT ON CONCRETE OR PAVEMENT.

--ITEM 662--
WORK ZONE MARKER TABS OR GUIDEMARKS PLACED PRIOR TO THE FINAL COURSE OF ASPHALTIC CONCRETE PAVEMENT OR SURFACE TREATMENT SHALL BE REMOVED DAILY BY THE CONTRACTOR AS THE ACP OPERATIONS PROGRESS. THIS REMOVAL SHALL BE CONSIDERED SUBSIDIARY TO THIS ITEM.

THE CONTRACTOR WILL BE REQUIRED TO REPLACE MISSING OR DAMAGED WORK ZONE PAVEMENT MARKINGS WEEKLY OR AS DIRECTED BY THE ENGINEER. REPLACED WORK ZONE PAVEMENT MARKINGS WILL BE PAID FOR BY THE APPROPRIATE BID ITEMS INVOLVED.

--ITEM 666--
TY I MATERIAL SHALL BE TY B-ALKYD AS SPECIFIED IN DEPARTMENTAL MATERIALS SPECIFICATION D-9-8220.

AFTER THE SURFACE HAS BEEN CLEANED AND PREPARED ACCORDING TO THE SPECIFICATIONS AND TO THE SATISFACTION OF THE ENGINEER, ALL THERMOPLASTIC MARKINGS SHALL BE APPLIED IN ACCORDANCE WITH THE PLANS, TEXAS MUTCD AND AS DIRECTED/APPROVED BY THE ENGINEER. THE

GENERAL NOTES AND SPECIFICATION DATA--

--ITEM 666--, CONT'D
THERMOPLASTIC MARKINGS MAY BE APPLIED DIRECTLY OVER EXISTING PAINTED PAVEMENT MARKINGS WHERE APPLICABLE.

THE THERMOPLASTIC MARKINGS SHALL BE APPLIED SO AS TO CONSTANTLY MAINTAIN A TRUE AND ACCEPTABLE ALIGNMENT THROUGHOUT BOTH STRAIGHT AND HORIZONTALLY CURVED SECTIONS OF HIGHWAY. THIS ALIGNMENT SHALL BE IN ACCORDANCE WITH THE PLANS AND/OR AS DIRECTED/APPROVED BY THE ENGINEER. IT SHALL BE THE CONTRACTOR'S RESPONSIBILITY TO PROVIDE FOR THE PASSAGE OF TRAFFIC THROUGH THE PROJECT IN COMFORT AND SAFETY AS DIRECTED/APPROVED BY THE ENGINEER.

EQUIPMENT USED SHALL BE CAPABLE OF PLACING A MINIMUM ONE HUNDRED MM (100 MM) AND/OR TWO HUNDRED MM (200 MM) SOLID OR BROKEN LINE AND SHALL BE CAPABLE OF PLACING A MINIMUM OF 18 KM MARKING PER WORK DAY. THE EQUIPMENT SHALL BE CONSIDERED IN UNSATISFACTORY WORKING CONDITION IF IT FAILS TO HAVE AN AVERAGE HOURLY PLACEMENT RATE OF 2.1 KM OF ACCEPTABLE ONE HUNDRED MM (100 MM) AND/OR TWO HUNDRED MM (200 MM) OF SOLID OR BROKEN LINES OVER FIVE (5) CONSECUTIVE WORKING DAYS OF SEVEN (7) HOURS OR MORE DUE TO EQUIPMENT MALFUNCTION.

THE MINIMUM THICKNESS OF SPRAY-APPLIED MARKINGS, AS MEASURED ON A FLAT PLATE BY MICROMETER OR SIMILAR DEVICE SHALL BE 3 MM FOR ALL LANE LINES AND 1.5 MM FOR EDGE LINES AND GORE OUTLINES. ALL STOP-BARS, LEGENDS AND SYMBOLS WILL HAVE A MINIMUM THICKNESS OF 3 MM. THESE THICKNESSES ARE REQUIRED FOR THE FULL WIDTH OF THE LINE BEING PLACED.

--ITEM 672--
RAISED PAVEMENT MARKERS SHALL NOT BE PLACED UNTIL THE ASPHALTIC CONCRETE PAVEMENT OR SURFACE TREATMENT HAS CURED A MINIMUM OF 48 HOURS.

THE BITUMINOUS ADHESIVE SHALL BE HEATED WITH EQUIPMENT APPROVED BY THE ENGINEER. THE EQUIPMENT SHALL BE CAPABLE OF HEATING AND MAINTAINING THE ADHESIVE AT A TEMPERATURE OF 200 DEGREES C, PLUS OR MINUS 5 DEGREES OR IN ACCORDANCE WITH THE MANUFACTURER'S RECOMMENDED TEMPERATURE. IT SHALL ALSO BE CAPABLE OF AGITATING THE MATERIAL TO MAINTAIN A UNIFORM CONSISTENCY AND TEMPERATURE.

IF ANY ADHESIVE IS BURNED DUE TO OVERHEATING, IT SHALL BE REPLACED AT THE CONTRACTOR'S EXPENSE. THE ADHESIVE WILL BE PACKAGED IN CARDBOARD CONTAINERS WITH A MASS LESS THAN 45 KG.

ADHESIVE DISPENSING EQUIPMENT SHALL BE TRUCK OR TRAILER MOUNTED. ALL ADHESIVE MATERIAL SHALL BE PLACED DIRECTLY FROM THE HEATED DISPENSER TO

GENERAL NOTES AND SPECIFICATION DATA--

--ITEM 672--, CONT'D
THE PAVEMENT. PORTABLE OR NON-HEATED CONTAINERS WILL NOT BE ALLOWED FOR THE PLACEMENT OF THE ADHESIVE MATERIAL.

THE ADHESIVE APPLICATION SHALL BE OF SUFFICIENT THICKNESS SO THAT WHEN THE MARKERS ARE PRESSED INTO THE ADHESIVE, 3 MM OR MORE ADHESIVE WILL REMAIN UNDER 100% OF THE MARKER. THE ADHESIVE SHOULD EXTEND NOT LESS THAN 10 MM BUT NOT MORE THAN 40 MM BEYOND THE PERIMETER OF THE MARKER.

RAISED PAVEMENT MARKERS (TRAFFIC BUTTONS, ETC.), PLACED ON NEW PAVEMENT MAY REQUIRE MORE THAN THE NORMAL AMOUNT OF ADHESIVE SO THAT THE PROPER CUSHION AND BONDING CAN BE OBTAINED.

--ITEM 680--
THIS PROJECT SHALL CONSIST OF FURNISHING AND INSTALLING ALL REQUIRED MATERIALS AND EQUIPMENT NECESSARY FOR THE COMPLETE UPGRADING OF THE EXISTING TRAFFIC SIGNAL AT THE INTERSECTION OF LP 1604 AND BRAUN RD AND FOR THE NEW INSTALLATION AT LP 1604 AND NEW GUILBEAU IN SAN ANTONIO.

ANY SIGNAL EQUIPMENT DAMAGED DURING CONSTRUCTION SHALL BE REPLACED IN IT'S ENTIRETY BY THE CONTRACTOR AT THE CONTRACTOR'S EXPENSE.

THE COMPLETE CONTROLLER ASSEMBLY AND CABINET WILL BE PROVIDED BY THE CITY. THE CONTRACTOR SHALL INSTALL ALL OTHER EQUIPMENT, FOUNDATIONS, AND PROPERLY LABELED FIELD WIRING IN ACCORDANCE WITH THE PLANS.

ALL PERMANENT SMALL TRAFFIC SIGNAL RELATED SIGNS SHALL BE FURNISHED BY THE CITY AND INSTALLED BY THE CONTRACTOR. THE CONTRACTOR SHALL PROVIDE ALL NECESSARY HARDWARE FOR MOUNTING. THE COST OF ERECTING THESE SIGNS SHALL BE CONSIDERED SUBSICIARY TO VARIOUS TRAFFIC SIGNAL BID ITEMS IN THIS PROJECT.

UNTIL THE PROJECT IS COMPLETED, THE CONTRACTOR IS RESPONSIBLE FOR THE MAINTENANCE OF THE TRAFFIC SIGNALS. THE CONTRACTOR SHALL ENSURE THAT ALL ELEMENTS OF THE TRAFFIC SIGNALS, EXTERNAL OF THE CONTROLLER, SHALL REMAIN IN OPERATION AT THEIR EXPENSE. THE CONTRACTOR SHALL COMPLETE ANY REPAIRS TO THE TRAFFIC SIGNALS WITHIN FOUR HOURS AFTER NOTIFICATION. THE CITY SHALL RETAIN THE RESPONSIBILTY OF THE OPERATION OF THE TRAFFIC SIGNALS.

--UTILITIES--
THE CONTRACTOR'S ATTENTION IS DIRECTED TO THE FACT THAT BOTH OVERHEAD AND UNDERGROUND UTILITY INSTALLATIONS EXIST IN THE VICINITY OF THIS

GENERAL NOTES AND SPECIFICATION DATA--

--UTILITIES--, CONT'D
CONSTRUCTION. THE EXACT LOCATION OF UNDERGROUND UTILITIES IS NOT CERTAIN. THE CONTRACTOR SHALL CONTACT THE AREA UTILITY COMPANIES FOR EXACT LOCATIONS OF UNDERGROUND UTILITIES AT LEAST 48 HOURS PRIOR TO DRILLING FOR FOUNDATIONS OR COMMENCING ANY WORK THAT MIGHT EFFECT PRESENT UTILITIES. THE LOCATIONS SHOWN ON THE PLANS FOR SIGNAL POLE FOUNDATIONS, CONTROLLER FOUNDATIONS, CONDUIT AND OTHER ITEMS MAY BE VARIED TO MEET LOCAL CONDITIONS, SUBJECT TO PRIOR APPROVAL BY THE ENGINEER. THE CONTRACTOR SHALL BE RESPONSIBLE FOR ADJUSTMENTS IN PROJECT CONSTRUCTION WHICH MAY BE NECESSARY BECAUSE OF CONFLICT WITH UTILITIES.

--ITEM 682--
ALL TRAFFIC SIGNAL SECTIONS SHALL BE MADE OF POLYCARBONATE RESIN AND SHALL BE BY THE SAME MANUFACTURER.

ALL TRAFFIC AND PEDESTRIAN SIGNAL FACES SHALL BE COVERED SO THAT THE SIGNAL FACES CANNOT BE SEEN FROM THE TIME OF INSTALLATION UNTIL PLACED IN OPERATION.

ALL PEDESTRIAN SIGNAL FACES SHALL BE SINGLE SECTION INCANDESCENT TYPE. DIE CAST POLYCARBONATE WILL BE AN ACCEPTABLE MATERIAL IN LIEU OF DIE CAST ALUMINUM. ALL MOUNTING ATTACHMENTS SHALL BE CONSTRUCTED OF STEEL PIPE AND SHALL BE MOUNTED AS SHOWN ON THE PLANS, THE PEDESTRIAN SIGNAL SHALL DISPLAY THE SYMBOLIZED MESSAGE AS SHOWN ON THE PLANS.

FOR ALL PROPOSED MAST ARM POLE ASSEMBLIES, MOUNTING BRACKET ASSEMBLY OPTION "C" AS SHOWN ON THE STATEWIDE STANDARD SHEET, SMA-130(2)-96(M), SHALL BE SUPPLIED BY THE CONTRACTOR.

SPAN MOUNTED TRAFFIC SIGNAL FACES SHALL BE MOUNTED AS SHOWN ON STATE STANDARD SHEET SP-130(1)-96(M).

--ITEM 684--
FOR EACH CABLE TERMINATING IN THE CONTROLLER CABINET AN EXTRA 3 M LENGTH SHALL BE PROVIDED. ALL CABLES ARE TO BE CONTINUOUS WITHOUT SPLICES FROM TERMINAL POINT TO TERMINAL POINT OR AS DIRECTED /APPROVED BY THE ENGINEER. ALL PROPOSED SIGNAL CABLE SHALL BE #14 A.W.G. SOLID COPPER. THE NUMBER OF CONDUCTORS REQUIRED SHALL BE AS SHOWN ON THE PLANS.

GENERAL NOTES AND SPECIFICATION DATA--

--ITEM 686--
ALL STEEL POLE ASSEMBLIES AND PEDESTAL POLES FURNISHED BY THE CONTRACTOR SHALL BE BY THE SAME MANUFACTURER.

--ITEM 688--
THE REQUIREMENTS FOR THE LOOP WIRE, LOOP DETECTOR CABLE, AND PEDESTRIAN PUSH BUTTON CABLE SHALL BE AS SHOWN ON THE CONSTRUCTION DETAIL SHEET.

THE PEDESTRIAN PUSH BUTTON SHALL BE WIRED WITH A 9/C#14 A.W.G. AS INDICATED ON THE PLANS.

THE PEDESTRIAN PUSH BUTTON SHALL BE RAISED OR FLUSH MOUNTED AND BE A MINIMUM OF 51 MM IN THE SMALLEST DIMENSION. THE FORCE TO ACTIVATE THE CONTROL SHALL BE NO GREATER THAN 22 N.

--ITEM 3022--
SURFACE TEST TYPE B (PROFILOGRAPH) SHALL BE USED. AN AUTOMATED PROFILOMETER IS REQUIRED.

FOR HOT MIX (TY C)(SURF), THE PERFORMANCE GRADE ASPHALT BINDER WILL BE PG 76-22

FOR HOT MIX (TY C), THE PERFORMANCE GRADE ASPHALT BINDER WILL BE PG 64-22

THE STRIPPING CHARACTERISTIC OF THE HOT MIX ASPHALTIC CONCRETE WILL BE TESTED ACCORDING TO TEST METHOD TEX-530-C (BOIL TEST). THE MAXIMUM STRIPPING IN THE PRODUCED MIXTURE WILL BE ZERO PERCENT UNLESS OTHERWISE APPROVED BY THE ENGINEER.

NO COMMERCIAL OR CONTRACTOR'S R.A.P. WILL BE ALLOWED IN THE MIXTURE UNLESS APPROVED OTHERWISE BY THE ENGINEER.

THE COARSE AGGREGATE USED IN THE MIXTURE FOR THE SURFACE/FINISH COURSE WILL REQUIRE A MAXIMUM 35 LOS ANGELES ABRASION AND A MAXIMUM 25 FIVE CYCLE SOUNDNESS TESTS RESULTS.

THE COARSE AGGREGATE USED IN THE SURFACE/FINISHED COURSE SHALL HAVE A MINIMUM POLISH VALUE OF 30.

THE LONGITUDINAL JOINTS SHALL BE AT THE LANE LINES OR AS DIRECTED/APPROVED BY THE ENGINEER.

GENERAL NOTES AND SPECIFICATION DATA--

--ITEM 3022--, CONT'D
THE ASPHALT PLANT SHALL BE EQUIPPED WITH TRUCK SCALES AS DEFINED IN SUBARTICLE 520.3(1) OF THE STANDARD SPECIFICATIONS. THREE MASS TICKETS BEARING THE DATE, THE TRUCK NUMBER AND THE GROSS, NET AND TARE MASS SHALL BE GIVEN TO THE TRUCK DRIVER BY THE CONTRACTOR'S OR ASPHALT PLANT PERSONNEL, AND THEN GIVEN TO THE STATE INSPECTOR AT THE SPREADING AND FINISHING MACHINE. THE CONTRACTOR MAY BE REQUIRED TO WEIGH LOADS OF ASPHALTIC CONCRETE ON PUBLIC SCALES OR PORTABLE PLATFORM SCALES TO INSURE THE PROPER MASS OF MATERIAL.

THE DENSITY REQUIREMENTS FOR THE MAINLANES SHALL ALSO APPLY TO THE SHOULDERS.

THE CONTRACTOR WILL BE REQUIRED TO SUBMIT A COPY OF THE TEST METHOD TEX-233-F PRODUCTION CHARTS TO THE ENGINEER ON A WEEKLY BASIS. AT THE END OF THE ACP WORK, ALL THE PRODUCTION CHART ORIGINALS SHALL BE PROVIDED BY THE CONTRACTOR OR THE CONTRACTOR'S ACP PRODUCER TO THE ENGINEER.

--ITEM 5015--
ANTI-GRAFFITI COATING SHALL BE APPLIED TO AREA LISTED BELOW AND AS DIRECTED BY THE ENGINEER.

THE COATING COLOR SHALL BE CLEAR. THE CONTRACTOR SHALL TREAT THE FOLLOWING AREAS: ALL BRIDGE WINGWALLS, BRIDGE RAILING, BRIDGE COLUMNS (UP TO 3M ABOVE GROUND), RIPRAP ALONG NORTHBOUND FRONTAGE RD AND AT HELOTES CREEK.

--ITEM 5028--
VEHICLE IMPACT ATTENUATORS (VIA) ARE TO BE USED TO IMPROVE PROTECTION DURING THE SEQUENCE OF WORK. THE MINIMUM NUMBER REQUIRED AT ANY ONE TIME ON THE PROJECT IS REFLECTED ON THE SEQUENCE OF WORK SUMMARY.

AT THE END OF CONSTRUCTION, ALL VIA'S IN ACCEPTABLE CONDITION SHALL BECOME THE PROPERTY OF THE STATE; THOSE NOT ACCEPTABLE SHALL BECOME THE PROPERTY OF THE CONTRACTOR, AS DETERMINED BY THE ENGINEER. VIA'S BECOMING THE PROPERTY OF THE STATE SHALL BE EMPTIED AND DELIVERED BY THE CONTRACTOR TO THE CONSTRUCTION FIELD OFFICE MAINTENANCE YARD AS DIRECTED/APPROVED BY THE ENGINEER.

THE CONTRACTOR SHALL USE STANDARD OBJECT MARKER OB-3A IN FRONT OF ALL VIA SETUPS AS SHOWN ON STANDARD SHEET, D & OM (VIA)-95(M). ALL MATERIAL AND LABOR FOR INSTALLING THE OBJECT MARKER SHALL BE CONSIDERED SUBSIDIARY TO THIS ITEM.

GENERAL NOTES AND SPECIFICATION DATA--

--ITEM 6003--
IN LIEU OF A SEALANT SPECIFIED UNDER SPECIAL SPECIFICATION "VEHICLE LOOP WIRE SEALANT", A SEALANT APPROVED BY THE ENGINEER MAY BE USED.

--ITEM 6008--
A PRE-CONSTRUCTION TRAFFIC SIGNAL FACILITY AND TRAFFIC SIGN FACILITY INVENTORIES WILL BE REQUIRED PRIOR TO THE COMMENCEMENT OF ANY WORK BY THE GENERAL CONTRACTOR.

THE INVENTORY WILL LIST THE QUALITY AND CONDITION OF THE EQUIPMENT WHICH IS TO BE SALVAGED AND RETURNED TO THE CITY. THIS INVENTORY SHALL INCLUDE, BUT NOT LIMITED TO THE FOLLOWING EQUIMENT AND MATERIALS:

PEDESTRIAN SIGNAL HEADS
TRAFFIC SIGNAL SECTIONS
SERVICE BOX
SIGNAL MOUNTING HARDWARE
STEEL SIGNAL POLES AND MAST ARMS
PEDESTRIAN PUSH BUTTONS AND SIGNS
TRAFFIC SIGNAL CONTROLLER AND CABINET
METAL SPLICE BOXES
SERVICE PEDESTALS
PIPE POST
STANDARD AND TRANSFORMER BASES
BACKPLATES
TRAFFIC SIGNAL LAMPS
(ALL EQUIPMENT AND ACCESORIES LOCATED WITHIN THE CONTROLLER CABINET)

THE SIGN INVENTORY SHALL SHOW SIGN TYPE, SIZE, AND CONDITION AND LOCATION.

BOTH THE SIGNAL AND SIGN FACILITIES INVENTORY SHALL BE CONDUCTED WITH THE CONTRACTOR AND ENGINEER PRESENT AND JOINTLY AGREED TO.

ALL TRAFFIC SIGNAL AND TRAFFIC SIGN EQUIPMENT AND MATERIALS FOR THE INTERSECTIONS OF BRAUN RD. & BOWEN'S CROSSING TO BE SALVAGED SHALL BE RETURNED TO THE CITY OF SAN ANTONIO'S TRAFFIC OPERATIONS FACILITY AT 223 S. CHERRY STREET. THE TRAFFIC OPERATIONS ENGINEER MAY BE CONTACTED AT (210) 207-7765 TO SCHEDULE RETURNS.

NON-SALVAGE ITEMS SUCH AS WOOD POLES AND CABLE SHALL BE DISPOSED OF BY THE CONTRACTOR IN A MANNER IN ACCORDANCE WITH THE LOCAL, STATE AND/OR FEDERAL E.P.A. REQUIREMENTS.

--ITEM 6116--
ALL VIVDS EQUIPMENT SHALL REMAIN THE PROPERTY OF THE STATE. AFTER THE VIVDS EQUIPMENT IS NO LONGER REQUIRED, THE CONTRACTOR SHALL RETURN ALL EQUIPMENT TO MR. GILBERT MIER WITH THE DISTRICT TRAFFIC SIGNAL OPERATIONS AT (210) 615-5975.

ESTIMATE SUMMARY

PROJECT CD 2452-1-35

CONTROL 2452-01-035

S.A.W.S. ITEMS EST.	S.A.W.S. ITEMS FINAL			LOOP 1604 BRIDGE ITEMS EST.	LOOP 1604 BRIDGE ITEMS FINAL	ROADWAY ITEMS EST.	ROADWAY ITEMS FINAL	ALT.	ITEM-CODE ITEM NO	DESC CODE	SP NO	DESCRIPTION	UNIT	TOTAL EST.	TOTAL FINAL
						4.740			100	5002		PREP ROW	KM	4.740	
						123406.000			110	5001		EXCAVATION (RDWY)	M3	123406.000	
				8105.000		3315.000			110	5002		EXCAVATION (CHAN)	M3	11420.000	
						110144.000			132	5018		EMBANK (ORD COMP)(TY B)(CL 3)	M3	110144.000	
						399714.000			160	5002		FURN AND PLAC TPSL (CL 2)(150 MM)	M2	399714.000	
						399714.000			164	5049	001	DRILL SEED (PERM)(URBAN)(CLAY)	M2	399714.000	
						15110.000			168	5001		VEGETATIVE WATERING	KL	15110.000	
						4250.000			169	5001	001	SOIL RET BLNKT (CL 1)(TY A)	M2	4250.000	
						10800.000			169	5007	001	SOIL RET BLNKT (CL 2)(TY E)	M2	10800.000	
						44242.000			247	5024	007	FL BS (COMPL IN PLAC)(TY A GR6 CL 4)	M3	44242.000	
						123394.000			310	5006		ASPH MATL (AE-P)	L	123394.000	
						1291.000			316	5028		AGGR (TY PB, GR 4)	M3	1291.000	
						193090.000			316	5124		ASPH(AC-5,AC-10)LATEX,HFRS-2P,CRS-1P/2P	L	193090.000	
						7329.000			345	5004		ASPH STAB BS (GR 4)	MGR	7329.000	
						525.000			351	5006		REPAIR EXIST FLEX PAV STRUCT (200 MM)	M2	525.000	
						2586.000			354	5006	003	PLANE ASPH CONC PAV (0 - 40 MM)	M2	2586.000	
						1.000			354	5053	003	SALV MATRL (CREDIT ITEM)	LS	1.000	
					378.000				416	5005		DRILL SHAFT (750 MM)	M	378.000	
					58.000				420	5013	001	CL C CONC (ABUT)	M3	58.000	
					72.200				420	5014	001	CL C CONC (BENT)	M3	72.200	
					1296.000				422	5001		REINF CONC SLAB	M2	1296.000	
					643.806				425	5002	001	PRESTR CONC BEAM (TY B)	M	643.806	
					127.200				427	5006	001	EPOXY WATERPROOFING	M2	127.200	
					1296.000				428	5001		CONC SURF TREAT	M2	1296.000	
					480.500		492.500		432	5001		RIPRAP (CONC)(CL B)	M3	973.000	
						25.000			450	5027		RAIL (CURB RAMP HANDRAIL)	M	25.000	
					236.401				450	5045		RAIL (TY SSTR)	M	236.401	
					48.368				454	5003		SEALED EXPANSION JOINTS (100 MM)	M	48.368	
						37.000			462	5005		CONC BOX CULV (1200 MM X 1200 MM)	M	37.000	
					282.800				462	5007		CONC BOX CULV (1500 MM X 900 MM)	M	282.800	
					194.000	68.500			462	5008		CONC BOX CULV (1500 MM X 1200 MM)	M	262.500	
						98.000			462	5014		CONC BOX CULV (1800 MM X 1200 MM)	M	98.000	
						24.500			462	5015		CONC BOX CULV (1800 MM X 1500 MM)	M	24.500	
						105.000			462	5018		CONC BOX CULV (2100 MM X 1200 MM)	M	105.000	
						170.800			464	5005	001	RC PIPE (CL III) (600 MM)	M	170.800	
						56.000			464	5007	001	RC PIPE (CL III) (750 MM)	M	56.000	
						198.500			464	5009	001	RC PIPE (CL III) (900 MM)	M	198.500	
						1.000			465	5030		INLET (COMPL)(CURB)(TY I)	EA	1.000	
						4.000			465	5031		INLET (COMPL)(CURB)(TY III)	EA	4.000	
					2.000				465	5036		INLET (COMPL)(DROP)(TY 3A)	EA	2.000	
						2.000			465	5044		INLET (COMPL)(ARMOR CURB SLOT)	EA	2.000	
						2.000			465	5045		INLET (COMPL)(DROP)(TY 3)	EA	2.000	
						3.000			465	5050		INLET (COMPL)(DROP)(TY W-1)	EA	3.000	
						3.000			465	5095		INLET (COMPL)(DROP)(TY 6)	EA	3.000	
						2.000			466	5014		WINGWALL (PW-15)(H=1200 MM)	EA	2.000	
						1.000			466	5015		WINGWALL (PW-15)(H=1500 MM)	EA	1.000	
						1.000			467	5005		SET (TY I)(1200 MM X 1200 MM)(1:3)(C)	EA	1.000	
					12.000				467	5007		SET (TY I)(1500 MM X 900 MM)(1:3)(C)	EA	12.000	
					8.000	1.000			467	5008		SET (TY I)(1500 MM X 1200 MM)(1:3)(C)	EA	9.000	
						8.000			467	5011		SET (TY I)(1800 MM X 1200 MM)(1:3)(C)	EA	8.000	

ESTIMATE & QUANTITY SHEET

STATE DIST. NO.	COUNTY	PROJECT NO.	SHEET NO.
15	BEXAR	CD 2452-1-35	12

ESTIMATE SUMMARY

EST.	FINAL	EST.	FINAL	EST.	FINAL	EST.	FINAL	EST.	FINAL	ALT.	ITEM NO	DESC CODE	SP NO	DESCRIPTION	UNIT	TOTAL EST.	TOTAL FINAL
								1.000			467	5012		SET (TY I)(1800 MM X 1500 MM)(1:3)(C)	EA	1.000	
								4.000			467	5014		SET (TY I)(2100 MM X 1200 MM)(1:3)(C)	EA	4.000	
								1.000			467	5070		SET (TY II)(600 MM)(RCP)(1:3)	EA	1.000	
								3.000			467	5071		SET (TY II)(750 MM)(RCP)(1:3)	EA	3.000	
								2.000			467	5072		SET (TY II)(900 MM)(RCP)(1:3)	EA	2.000	
								3.000			467	5078		SET (TY II)(600 MM)(RCP)(1:6)	EA	3.000	
								2.000			467	5080		SET (TY II)(900 MM)(RCP)(1:6)	EA	2.000	
								1.000			496	5001		REMOV OLD STR (LARGE)	EA	1.000	
								1.000			500	5001		MOBILIZATION	LS	1.000	
								16.000			502	5001		BARRICADES, SIGNS AND TRAF HANDLE	MO	16.000	
								5308.100			508	5003		CONSTRUCT DETOURS (CL 3)	M2	5308.100	
								2174.900			512	5001		PORT CONC TRAF BAR (FURN & INSTL)	M	2174.900	
								2520.700			512	5003		PORT CONC TRAF BAR (MOVE & RESET)	M	2520.700	
								2174.900			512	5004		PORT CONC TRAF BAR (REMOVE)	M	2174.900	
								51.800			529	5001		CONC CURB (TY 1)	M	51.800	
								3731.200			529	5026		CONC CURB (TY A)	M	3731.200	
								280.000			530	5009		DRVWYS (CONC)(TY 1)	M2	280.000	
								1103.000			530	5038		DRVWAYS (ASPH-CONC PAV)(TY I)	M2	1103.000	
								39.900			531	5002		CONCRETE SIDEWALKS	M2	39.900	
								44.800			531	5003		CONCRETE SIDEWALK (WHEELCHAIR RAMP)	M2	44.800	
								276.000			536	5002		CONC MEDIAN	M2	276.000	
								3.000			540	5005	002	TERM ANCHOR SECT (2.67 MM)	EA	3.000	
								247.000			540	5006	002	MTL BEAM GD FEN (TIM POST)(2.67 MM)	M	247.000	
								190.000			540	5007	002	MTL BM GD FEN (BLK OUT)TIM POST 2.67 MM	M	190.000	
								228.000			542	5001		REMOV METAL BEAM GUARD FENCE	M	228.000	
								8.000			542	5003		REMOV TERMINAL-ANCHOR SECTION	EA	8.000	
								9.000			610	5001	001	RDWY ILL ASSEM (TY SA 15T-3)(.4 KW)S	EA	9.000	
								1.000			610	5002	001	RDWY ILL ASSEM (TY SA 15T-3-3)(.4 KW)S	EA	1.000	
								9.000			610	5003	001	RDWY ILL ASSEM (TY SA 12T-3)(.25 KW)S	EA	9.000	
								3.000			610	5004	001	RDWY ILL ASSEM (TY SA 12T-3-3)(.25 KW)S	EA	3.000	
								7.000			611	5001		REMOV RDWY ILL ASSEM	EA	7.000	
								3311.000			618	5009		CONDUIT (PVC)(SCHD 40)(32 MM)	M	3311.000	
								220.000			618	5017		CONDUIT (PVC)(SCHD 80)(38 MM)	M	220.000	
								1870.000			618	5018		CONDUIT (PVC)(SCHD 80)(50 MM)	M	1870.000	
								570.000			618	5020		CONDUIT (PVC)(SCHD 80)(75 MM)	M	570.000	
								110.000			618	5026		CONDUIT (RM)(PUSH-BORE)(50 MM)	M	110.000	
								4371.000			620	5004		ELEC CONDUCTOR (NO. 6) BARE	M	4371.000	
								6642.000			620	5009		ELEC CONDUCTOR (NO. 8) INSULATED	M	6642.000	
								655.000			620	5011		ELEC CONDUCTOR (NO. 4) INSULATED	M	655.000	
								44.000			624	5001		GROUND BOX TY A (122311) W/APRON	EA	44.000	
								19.000			624	5004		GROUND BOX TY D (162922) W/APRON	EA	19.000	
								2.000			628	5042		ELEC SERV TYD(120/240)070(NS)GS(E)EX(O)	EA	2.000	
								1.000			628	5056		ELEC SERV TYS(240/480)060(NS)GS(T)TP(O)	EA	1.000	
								3.000			628	5099		ELEC SERV TYS(240/480)040(NS)GS(T)TP(O)	EA	3.000	
								47.430			634	5001		PLYWOOD SIGNS (TY A)	M2	47.430	
								2.280			636	5001		ALUM SIGNS (TY A)	M2	2.280	
								66.000			644	5001		SMALL RDSD SGN ASSM (TY A)	EA	66.000	
								14.000			644	5002		SMALL RDSD SGN ASSM (TY A-1)	EA	14.000	
								4.000			644	5003		SMALL RDSD SGN ASSM (TY B)	EA	4.000	
								7.000			644	5005		SMALL RDSD SGN ASSM (TY D-1)	EA	7.000	

ESTIMATE & QUANTITY SHEET

STATE DIST. NO.	COUNTY	PROJECT NO.	SHEET NO.
15	BEXAR	CD 2452-1-35	12 A

ESTIMATE SUMMARY

EST.	FINAL	EST.	FINAL	EST.	FINAL	EST.	FINAL	EST.	FINAL	ALT	ITEM-CODE ITEM NO	DESC CODE	SP NO	DESCRIPTION	UNIT	TOTAL EST.	TOTAL FINAL
								1.000			644	5006		SMALL RDSD SGN ASSM (TY D-2)	EA	1.000	
								2.000			644	5008		SMALL RDSD SGN ASSM (TY D-4)	EA	2.000	
								86.000			644	5011		SMALL RDSD SGN ASSM (TY F)	EA	86.000	
								1998.200			647	5001		LG RDSD SGN SUPT (STRUCT STL)	KG	1998.200	
								71.000			649	5002		REMOV SMALL RDSD SGN ASSMS	EA	71.000	
								1.000			649	5008		RELOC SMALL RDSD SIGNS (RE-INSTALL)	EA	1.000	
								10.700			656	5001		FND LG RDSD SGN SUPT (300 MM DRIL SHFT)	M	10.700	
								11.000			656	5003		FND FOR TRAF SIG (600 MM DRIL SHFT)	M	11.000	
								12.000			656	5005		FND FOR TRAF SIG (TYA)(900MM DRIL SHFT)	M	12.000	
								23.000			656	5006		FND FOR TRAF SIG (TYB)(900MM DRIL SHFT)	M	23.000	
								2.000			656	5027		TRAF SIG CNTRL FND (CITY TYPE)	EA	2.000	
								84.000			658	5001		DEL ASM TY A (D-SW)	EA	84.000	
								79.000			658	5002		DEL ASM TY A (D-SY)	EA	79.000	
								8.000			658	5004		DEL ASM TY A (D-SW) BI-DIR	EA	8.000	
								3.000			658	5005		DEL ASM TY A (D-DW)	EA	3.000	
								51.000			658	5062		OBJ MRK ASM TY 2 (OM-2SR)(A)	EA	51.000	
								4.000			658	5078		OBJ MRK ASM TY 3 (OM-3L)	EA	4.000	
								3.000			658	5079		OBJ MRK ASM TY 3 (OM-3R)	EA	3.000	
								8.000			658	5093		OBJ MRK ASM TY 2 (OM-2HP)(A)	EA	8.000	
								111.000			659	5001		REMOV DELIN & OBJECT MARKER ASSMS	EA	111.000	
								4541.400			662	5001	002	WRK ZN PAV MRK REMOV (W) (SLD) (100 MM)	M	4541.400	
								133.000			662	5002	002	WRK ZN PAV MRK REMOV (W) (BRK) (100 MM)	M	133.000	
								322.000			662	5007	002	WRK ZN PAV MRK REMOV (W) (SLD) (200 MM)	M	322.000	
								50.000			662	5011	002	WRK ZN PAV MRK REMOV (W) (SLD) (600 MM)	M	50.000	
								1071.000			662	5023	002	WRK ZN PAV MRK REMOV (Y) (SLD)(100 MM)	M	1071.000	
								2632.000			662	5030	002	WRK ZN PAV MRK REMOV (Y) (SLD)(300 MM)	M	2632.000	
								6900.000			662	5049	002	WRK ZN PAV MRK NON-REMV (W)(SLD)100 MM	M	6900.000	
								910.000			662	5050	002	WRK ZN PAV MRK NON-REMV (W)(BRK)100 MM	M	910.000	
								6760.000			662	5069	002	WRK ZN PAV MRK NON-REMV (Y)(SLD)100 MM	M	6760.000	
								1000.000			662	5079	002	WRK ZN PAV MRK GDMRK (W)	EA	1000.000	
								11590.000			666	5001	007	REFL PAV MRK TY I (W) (SLD) (100 MM)	M	11590.000	
								2215.000			666	5002	007	REFL PAV MRK TY I (W) (BRK) (100 MM)	M	2215.000	
								1615.000			666	5006	007	REFL PAV MRK TY I (W) (SLD) (200 MM)	M	1615.000	
								1435.000			666	5012	007	REFL PAV MRK TY I (W) (SLD) (600 MM)	M	1435.000	
								26.000			666	5013	007	REFL PAV MRK TY I (W) (ARROW)	EA	26.000	
								26.000			666	5017	007	REFL PAV MRK TY I (W) (WORD)	EA	26.000	
								10090.000			666	5024	007	REFL PAV MRK TY I (Y) (SLD) (100 MM)	M	10090.000	
								341.000			666	5029	007	REFL PAV MRK TY I (Y) (SLD) (200 MM)	M	341.000	
								245.000			666	5032	007	REFL PAV MRK TY I (Y) (SLD) (600 MM)	M	245.000	
								5.000			666	5034	007	REFL PAV MRK TY I (Y) (MED NOSE)	EA	5.000	
								11590.000			666	5035	007	REFL PAV MRK TY II (W) (SLD) (100 MM)	M	11590.000	
								2215.000			666	5036	007	REFL PAV MRK TY II (W) (BRK) (100 MM)	M	2215.000	
								1615.000			666	5039	007	REFL PAV MRK TY II (W) (SLD) (200 MM)	M	1615.000	
								1435.000			666	5044	007	REFL PAV MRK TY II (W) (SLD) (600 MM)	M	1435.000	
								26.000			666	5045	007	REFL PAV MRK TY II (W) (ARROW)	EA	26.000	
								26.000			666	5049	007	REFL PAV MRK TY II (W) (WORD)	EA	26.000	
								10090.000			666	5056	007	REFL PAV MRK TY II (Y) (SLD) (100 MM)	M	10090.000	
								341.000			666	5060	007	REFL PAV MRK TY II (Y) (SLD) (200 MM)	M	341.000	
								245.000			666	5063	007	REFL PAV MRK TY II (Y) (SLD) (600 MM)	M	245.000	
								5.000			666	5065	007	REFL PAV MRK TY II (Y) (MED NOSE)	EA	5.000	

ESTIMATE SUMMARY

EST.	FINAL	EST.	FINAL	EST.	FINAL	EST.	FINAL	EST.	FINAL	ALT.	ITEM-CODE ITEM NO	DESC CODE	SP NO	DESCRIPTION	UNIT	TOTAL EST.	TOTAL FINAL
								2750.000			672	5004	004	RAIS PAV MRKR CL A (JIGGLE) TY W	EA	2750.000	
								1056.000			672	5005	004	RAIS PAV MRKR CL A (JIGGLE) TY Y	EA	1056.000	
								144.000			672	5009	004	RAIS PAV MRKR CL B (REFL) TY II-A-A	EA	144.000	
								1278.000			672	5010	004	RAIS PAV MRKR CL B (REFL) TY II-C-R	EA	1278.000	
								5433.000			672	5016	004	RAIS PAV MRKR CL C (TRAF BTN) TY W	EA	5433.000	
								2107.000			677	5001		ELIM EXT PAV MRK & MRKR (100 MM)	M	2107.000	
								550.000			677	5003		ELIM EXT PAV MRK & MRKR (200 MM)	M	550.000	
								238.000			677	5006		ELIM EXT PAV MRK & MRKR (600 MM)	M	238.000	
								2.000			680	5002		INSTAL OF HWY TRAF SIG (SYSTEM)	EA	2.000	
								1.000			681	5001		TEMP TRAF SIGNALS FOR CONSTRUCTION	EA	1.000	
								63.000			682	5002		VEH SIG SEC (300 MM)	EA	63.000	
								18.000			682	5005		PED SIG SEC (2 INDICATIONS IN 1 SEC)	EA	18.000	
								16.000			682	5009		BACK PLATE (3 SEC) (300 MM)	EA	16.000	
								3.000			682	5011		BACK PLATE (5 SEC) (300 MM)	EA	3.000	
								2630.000			684	5044		TRAF SIG CBL (TY C) (2 CONDR)(14 AWG)	M	2630.000	
								1240.000			684	5047		TRAF SIG CBL (TY A) (7 CONDR)(14 AWG)	M	1240.000	
								1100.000			684	5048		TRAF SIG CBL (TY A) (9 CONDR)(14 AWG)	M	1100.000	
								4.000			686	5004		TRAF SIG POLE ASM (STL)STR(TY D) 10.4 M	EA	4.000	
								1.000			686	5013		TRAF SIG POLE ASM (STL)1 ARM (12.2 M)	EA	1.000	
								1.000			686	5014		TRAF SIG POLE ASM (STL)1 ARM (13.4 M)	EA	1.000	
								1.000			686	5035		TRAF SIG POL ASM (STL)2 ARM(12.2-11.0M)	EA	1.000	
								1.000			686	5040		TRAF SIG POL ASM (STL)2 ARM(13.4-11.0M)	EA	1.000	
								18.000			688	5001		PED DETECT (PUSH BTN)	EA	18.000	
								792.000			688	5011		VEH DETECT (SAWCUT)	M	792.000	
								12593.000			3022	5003		HOT MIX (TY C)	MGR	12593.000	
								12641.000			3022	5018		HOT MIX (TY C)(SURF)	MGR	12641.000	
								34.000			5002	5004		ROCK FILTER DAMS (TY 2)	M	34.000	
								34.000			5002	5005		ROCK FILTER DAMS (REMOV & REPLAC)(TY 2)	M	34.000	
								34.000			5002	5006		ROCK FILTER DAMS (REMOV)(TY 2)	M	34.000	
								135.000			5002	5010		ROCK FILTER DAMS (TY 4)	M	135.000	
								135.000			5002	5011		ROCK FILTER DAMS (REMOV & REPLAC)(TY 4)	M	135.000	
								135.000			5002	5012		ROCK FILTER DAMS (REMOV)(TY 4)	M	135.000	
								40.000			5005	5001		BKHOE WORK (EROSN CONT)(CL 1)	H	40.000	
								40.000			5005	5003		BLADING WORK (EROSN CONT)(CL 1)	H	40.000	
								40.000			5005	5007		EXCAV WORK (EROSN CONT)(CL 1)	H	40.000	
								510.000			5006	5001		CONSTRUCT EXIT (TY 1)	M2	510.000	
								510.000			5006	5002		CONSTRUCT EXIT (REMOV & REPLAC)(TY 1)	M2	510.000	
								510.000			5006	5003		CONSTRUCT EXIT (REMOV)(TY 1)	M2	510.000	
								510.000			5006	5007		CONSTRUCT EXIT (TY 3)	M2	510.000	
								510.000			5006	5008		CONSTRUCT EXIT (REMOV & REPLAC)(TY 3)	M2	510.000	
								510.000			5006	5009		CONSTRUCT EXIT (REMOV)(TY 3)	M2	510.000	
								2000.000			5012	5001		TEMP SEDMT CONT FENCE	M	2000.000	
								2000.000			5012	5002		TEMP SEDMT CONT FENCE (REMOV & REPLAC)	M	2000.000	
								2000.000			5012	5003		TEMP SEDMT CONT FENCE (REMOV)	M	2000.000	
								931.000			5015	5001		ANTI-GRAFFITI COATING (TY II)(CLEAR)	M2	931.000	
								238.000			5028	5001		VEH IMP ATTN ASSEM BRLS	EA	238.000	
								140.000			5028	5002		VEH IMP ATTN ASSEM BRLS (MOVE & RESET)	EA	140.000	
								238.000			5028	5003		VEH IMP ATTN ASSEM BRLS (REMOVE)	EA	238.000	
								3.000			5098	5012		QUADGUARD SYSTEM (760 MM)(TY B)10 BAY	EA	3.000	
								7.000			5119	5001		SINGLE GDRAIL TERM (TY I)	EA	7.000	

ESTIMATE & QUANTITY SHEET

STATE DIST. NO.	COUNTY	PROJECT NO.	SHEET NO.
15	BEXAR	CD 2452-1-35	12C

ESTIMATE SUMMARY

EST.	FINAL	EST.	FINAL	EST.	FINAL	EST.	FINAL	EST.	FINAL	ALT.	ITEM-CODE ITEM NO	ITEM-CODE DESC CODE	ITEM-CODE SP NO	DESCRIPTION	UNIT	TOTAL EST.	TOTAL FINAL
				294.000							5120	5001		SAN SEW (TRENCH EXCAVATION PROTECTION)	M	294.000	
				294.000							5120	5002		SAN SEW (200 MM)	M	294.000	
				2.000							5120	5003		SAN SEW (150 MM)(LATERAL SERV CONN)	M	2.000	
				6.000							5120	5004		SAN SEW MANH (COMPL)(RING & COVER)WT	EA	6.000	
				2.000							5120	5005		SAN SEW (ABANDON MANHOLE)	EA	2.000	
				1.000							5120	5006		SAN SEW (ADJUST MANHOLE)	EA	1.000	
				0.200							5120	5008		SAN SEW (CONCRETE CRADLES)	M3	0.200	
				44.000							5120	5009		SAN SEW (CUT & RESTORE PAVEMENT)	M2	44.000	
				159.000							5120	5010		SAN SEW (ABANDONED PIPE)(200 MM)	M	159.000	
				414.000							5121	5001		TRENCH EXCAVATION PROTECTION	M	414.000	
				9.000							5121	5002		PIPE WTR MAIN (DI)(300 MM)	M	9.000	
				333.000							5121	5003		PIPE WTR MAIN (DI)(400 MM)	M	333.000	
				16.000							5121	5004		PIPE WTR MAIN (DI)(600 MM)	M	16.000	
				2.000							5121	5006		TIE-IN (MAIN)(COMPL)(300 MM)	EA	2.000	
				6.000							5121	5007		TIE-IN (MAIN)(COMPL)(400 MM)	EA	6.000	
				2.000							5121	5008		TIE-IN (MAIN)(COMPL)(600 MM)	EA	2.000	
				1.000							5121	5009		STD FIRE HYDRANT W/150 MM VALVE & BOX	EA	1.000	
				4.000							5121	5010		TEMP BLOW-OFF (COMPL)(50 MM)	EA	4.000	
				1.000							5121	5011		TEMP BLOW-OFF (COMPL)(100 MM)	EA	1.000	
				4.000							5121	5012		AUTO AIR RELEASE VALVE (COMPL)(25 MM)	EA	4.000	
				1.000							5121	5013		AUTO AIR RELEASE VALVE (COMPL)(50 MM)	EA	1.000	
				2.000							5121	5014		ADJUST EXIST VALVE BOX	EA	2.000	
				5.000							5121	5015		HYDROSTATIC PRESSURE TEST	EA	5.000	
				13.000							5121	5016		CONCRETE CAP (150 MM)	M3	13.000	
				3.000							5121	5017		CAST-IRON FITTINGS	MGR	3.000	
								2.000			6008	5001		SALV TRAF SIGNALS	EA	2.000	
								10.000			6023	5001		PEDESTAL POLE ASSEM	EA	10.000	
								1.000			6116	5006		VIVDS TEMPORARY	EA	1.000	
														CONTRACTOR FORCE ACCOUNT WORK (PART)			
														01 FURN OFFICERS AND CRUISERS	LS	1.000	
														02 FURN PHONE LINES	LS	1.000	
														CITY FORCE ACCOUNT WORK (PART)			
														01 FURN TRAFFIC SIGNALS	LS	1.000	

ESTIMATE & QUANTITY SHEET

STATE DIST. NO.	COUNTY	PROJECT NO.	SHEET NO.
15	BEXAR	CD 2452-1-35	12D

SHEET 104
PLAN SHEET 1 OF 14

STATION	EXCAVATION (RDWY) M3	EMBANK (ORD COMP) (TY B)(CL 3) M3
9+760		
	264	25
9+780		
	333	16
9+800		
	824	4
9+820		
	1558	0
9+840		
	2234	0
9+860		
	2793	0
9+880		
	3341	2
9+900		
	3820	4
9+920		
	3918	6
9+940		
	3702	19
9+960		
SHEET TOTAL	22787	76

SHEET 105
PLAN SHEET 2 OF 14

STATION	EXCAVATION (RDWY) M3	EMBANK (ORD COMP) (TY B)(CL 3) M3
9+960		
	3353	75
9+980		
	2855	117
10+000		
	2313	140
10+020		
	1848	191
10+040		
	1528	238
10+060		
	1250	280
10+080		
	895	335
10+100		
	733	414
10+120		
	759	727
10+140		
	721	769
10+160		
	617	547
10+180		
	575	593
10+200		
	616	434
10+220		
	551	207
10+240		
	670	224
10+260		
	737	423
10+280		
	302	669
10+300		
	4	935
10+320		
SHEET TOTAL	20327	7318

SHEET 106
PLAN SHEET 3 OF 14

STATION	EXCAVATION (RDWY) M3	EMBANK (ORD COMP) (TY B)(CL 3) M3
10+320		
	490	1223
10+340		
	601	1239
10+360		
	214	1079
10+380		
	220	894
10+400		
	241	657
10+420		
	255	436
10+440		
	286	240
10+460		
	368	87
10+480		
	557	12
10+500		
	745	1
10+520		
	825	0
10+540		
	845	0
10+560		
	890	0
10+580		
	945	0
10+600		
	946	0
10+620		
	1101	0
10+640		
	1330	0
10+660		
	1595	0
10+680		
SHEET TOTAL	12454	5868

SHEET 107
PLAN SHEET 4 OF 14

STATION	EXCAVATION (RDWY) M3	EMBANK (ORD COMP) (TY B)(CL 3) M3
10+680		
	2088	0
10+700		
	1925	0
10+720		
	1780	0
10+740		
	1635	2
10+760		
	1607	2
10+780		
	508	104
10+860		
	1272	467
10+880		
	1110	689
10+900		
	322	662
10+920		
	211	378
10+940		
	136	172
10+960		
	279	143
10+980		
	484	110
11+000		
	565	3
11+020		
	552	3
11+040		
BRAUN	9591	950
SHEET TOTAL	24065	3685

SHEET 108
PLAN SHEET 5 OF 14

STATION	EXCAVATION (RDWY) M3	EMBANK (ORD COMP) (TY B)(CL 3) M3
11+040		
	583	3
11+060		
	586	4
11+080		
	648	4
11+100		
	754	5
11+120		
	891	4
11+140		
	997	3
11+160		
	977	3
11+180		
	882	22
11+200		
	585	119
11+220		
	227	535
11+240		
	99	860
11+260		
	89	808
11+280		
	90	738
11+300		
	92	791
11+320		
	100	772
11+340		
	110	749
11+360		
	140	610
11+380		
	191	320
11+400		
SHEET TOTAL	8041	6350

SHEET 109
PLAN SHEET 6 OF 14

STATION	EXCAVATION (RDWY) M3	EMBANK (ORD COMP) (TY B)(CL 3) M3
11+400		
	233	209
11+420		
	232	155
11+440		
	192	148
11+460		
	150	172
11+480		
	108	231
11+500		
	53	367
11+520		
	11	973
11+540		
	49	872
11+560		
	432	139
11+580		
	701	78
11+600		
	758	73
11+620		
	849	4
11+640		
	722	4
11+660		
	574	12
11+680		
	506	24
11+700		
	479	33
11+720		
	455	42
11+740		
	423	52
11+760		
SHEET TOTAL	6927	3588

SHEET 110
PLAN SHEET 7 OF 14

STATION	EXCAVATION (RDWY) M3	EMBANK (ORD COMP) (TY B)(CL 3) M3
11+760		
	401	62
11+780		
	346	73
11+800		
	270	89
11+820		
	242	134
11+840		
	255	166
11+860		
	291	162
11+880		
	325	152
11+900		
	345	125
11+920		
	367	82
11+940		
	255	171
11+960		
	247	321
11+980		
	279	349
12+000		
	257	312
12+020		
	256	266
12+040		
	239	228
12+060		
	217	182
12+080		
	186	151
12+100		
	150	234
12+120		
SHEET TOTAL	4958	3259

NO.	DATE	REVISION	APPROV.

Texas Department of Transportation
LOOP 1604

EARTHWORK SUMMARY

SHEET 1 OF 2

Kimley-Horn and Associates, Inc.

Designed BHS	DIST	FED REG	FEDERAL AID PROJECT #				HIGHWAY
Checked DKK	15	6	CD 2452-01-035				LP1604
Drawn DKK	COUNTY			CONTROL	SECT	JOB	SHEET
Checked JKK	BEXAR			2452	01	035	13

FILENAME: g:\67316-03\sum3.dgn PLOTTED: 02 MAY 97 14:53:31

LEVELS DISPLAYED

SHEET 111
PLAN SHEET 8 OF 14

STATION	EXCAVATION (RDWY) M3	EMBANK (ORD COMP) (TY B)(CL 3) M3
12+120		
12+140	129	418
12+160	112	556
12+180	95	711
12+200	81	1000
12+220	66	1316
12+240	44	1485
12+260	14	1580
12+280	0	1735
12+300	0	1870
12+320	0	2238
12+340	0	2334
12+360	0	2929
12+380	8	3918
12+400	7	4163
12+420	0	0
12+440	0	0
12+460	0	1862
12+480	0	4583
SHEET TOTAL	556	32698

SHEET 112
PLAN SHEET 9 OF 14

STATION	EXCAVATION (RDWY) M3	EMBANK (ORD COMP) (TY B)(CL 3) M3
12+480	0	4050
12+500	0	3566
12+520	0	2869
12+540	0	2020
12+560	0	1447
12+580	0	1294
12+600	0	1021
12+620	0	793
12+640	0	718
12+660	10	601
12+680	31	530
12+700	63	467
12+720	101	381
12+740	158	307
12+760	184	275
12+780	152	282
12+800	117	292
12+820	101	292
12+840		
SHEET TOTAL	917	21205

SHEET 113
PLAN SHEET 10 OF 14

STATION	EXCAVATION (RDWY) M3	EMBANK (ORD COMP) (TY B)(CL 3) M3
12+840	116	256
12+860	147	208
12+880	189	178
12+900	248	144
12+920	298	113
12+940	311	96
12+960	288	89
12+980	252	98
13+000	212	110
13+020	175	121
13+040	168	134
13+060	177	141
13+080	205	140
13+100	226	113
13+120	225	94
13+140	229	100
13+160	238	92
13+180	228	93
13+200		
SHEET TOTAL	3932	2320

SHEET 114
PLAN SHEET 11 OF 14

STATION	EXCAVATION (RDWY) M3	EMBANK (ORD COMP) (TY B)(CL 3) M3
13+200	191	139
13+220	148	232
13+240	110	354
13+260	84	478
13+280	72	555
13+300	65	601
13+320	58	650
13+340	52	693
13+360	46	724
13+380	40	743
13+400	33	775
13+420	30	908
13+440	97	933
13+460	87	757
13+480	76	632
13+500	134	539
13+520	129	464
13+540	135	433
13+560		
SHEET TOTAL	1587	10610

SHEET 115
PLAN SHEET 12 OF 14

STATION	EXCAVATION (RDWY) M3	EMBANK (ORD COMP) (TY B)(CL 3) M3
13+560	144	420
13+580	154	420
13+600	159	423
13+620	141	427
13+640	112	452
13+660	81	517
13+680	52	596
13+700	35	667
13+720	25	738
13+740	20	798
13+760	17	840
13+780	13	864
13+800	12	820
13+820	17	677
13+840	20	531
13+860	24	426
13+880	36	337
13+900	53	286
13+920		
SHEET TOTAL	1115	10239

SHEET 116
PLAN SHEET 13 OF 14

STATION	EXCAVATION (RDWY) M3	EMBANK (ORD COMP) (TY B)(CL 3) M3
13+920	69	261
13+940	86	235
13+960	108	215
13+980	117	198
14+000	128	166
14+020	175	135
14+040	279	116
14+060	452	103
14+080	640	101
14+100	783	105
14+120	878	121
14+140	921	133
14+160	935	122
14+180	896	104
14+200	843	92
14+220	817	91
14+240	803	89
14+260	768	81
14+280		
SHEET TOTAL	9698	2468

SHEET 117
PLAN SHEET 14 OF 14

STATION	EXCAVATION (RDWY) M3	EMBANK (ORD COMP) (TY B)(CL 3) M3
14+280	708	70
14+300	698	49
14+320	746	31
14+340	814	21
14+360	879	17
14+380	832	16
14+400	588	25
14+420	326	25
14+440	198	24
14+460	144	56
14+480	109	126
14+500		
SHEET TOTAL	6042	460

PROJECT TOTAL

EXCAVATION (RDWY) M3	EMBANK (ORD COMP) (TY B)(CL 3) M3
123,406	110,144

Texas Department of Transportation
LOOP 1604

EARTHWORK SUMMARY

SHEET 2 OF 2

Kimley-Horn and Associates, Inc.

Designed BHS	DIST	FED REG	FEDERAL AID PROJECT #				HIGHWAY
Checked DKK	15	6	CD 2452-01-035				LP1604
Drawn DKK	COUNTY			CONTROL	SECT	JOB	SHEET
Checked JKK	BEXAR			2452	01	035	14

FILENAME: G:\67316-03\SUM4.DGN PLOTTED: 02 MAY 97 14:40:02

LEVELS DISPLAYED
1 2 3 4 5 6 7 8 9 10 11 12 13 14 15 16
17 18 19 20 21 22 23 24 25 26 27 28 29 30 31 32
33 34 35 36 37 38 39 40 41 42 43 44 45 46 47 48
49 50 51 52 53 54 55 56 57 58 59 60 61 62 63

GRADING SUMMARY

SHEET NO.	STATION TO STATION	PREP ROW KM	EXCAVATION (RDWY) M3	EMBANK (ORD COMP) (TY B)(CL 3) M3	FURN & PLAC TPSL(CL 2) (150 MM) M2	DRILL SEED (PERM)(URBAN) (CLAY) M2	FLEX BASE (COMPL IN PLAC) (TY A GR 6) (CL 4) M3	* ASPH MATRL (AE-P) M2	* ONE COURSE SURFACE TRT M2	* ASPH STAB BASE GR 4 (200 mm) M2	* HMA (TY C) M2	* HMA (TY C) (SURF) M2	PLANE ASPH CONC PAV (0-40mm) M2	* ASPH STAB BASE GR 4 (280 mm) M2	RIPRAP CONC (CL B) M3	ANTI GRAFFITI CLEAR (TY 11) M2
104	9+760 to 9+960	0.200	22787	76	10991	10991	1431	3720	3720	-	3624	3528	-	-	56	461
105	9+960 to 10+320	0.360	20327	7318	22086	22086	5864	16195	16195	850	15933	15724	-	-	55	470
106	10+320 to 10+680	0.360	12454	5868	45815	45815	3454	8993	8993	-	8777	8561	-	-	-	-
107	10+680 to 11+040	0.360	24065	3685	39980	39980	5598	21059	25933	6289	20512	19466	-	-	-	-
108	11+040 to 11+400	0.360	8041	6350	36410	36410	3650	9518	9518	-	9335	9117	-	-	-	-
109	11+400 to 11+760	0.360	6927	3588	27220	27220	2852	9480	9480	1314	9255	9944	858	690	-	-
110	11+760 to 12+120	0.360	4958	3259	28270	28270	1815	6220	6220	1474	6032	9019	1728	1900	-	-
	SUB-TOTAL	2.36	99559	30144	210772	210772	24664	75185	80059	9927	73468	75359	2586	2590	111	931

SHEET NO.	STATION TO STATION	REPAIR EXIST FLEX PAV STRUCT(200MM) M2	CONC MEDIAN M2	DRVWAYS (ASPH-CONC PAV)(TY 1) M2	DRVWAYS (CONC)(TY 1) M2	CONC CURB (TY A) M	CONC CURB (TY 1) M	SINGLE GDRAIL TERM EA	MTL BEAM GD FEN (TIM POST) (2.67MM) M	MTL BEAM GD FEN (TIM POST)(BLK OUT) M	TERM ANCHOR SECT (2.67MM) EA	** POST CABLE FENCE M	CONCRETE SIDE-WALK M2	CONCRETE SIDE-WALK (WHLCHR) M2
104	9+760 to 9+960	-	-	-	-	200	-	-	-	-	-	100	-	-
105	9+960 to 10+320	-	-	221	-	474	-	1	-	38	1	-	-	-
106	10+320 to 10+680	-	-	84	-	720	-	1	-	129.2	1	-	-	-
107	10+680 to 11+040	-	162	120	255	2179.2	-	1	-	22.8	1	-	-	44.8
108	11+040 to 11+400	-	-	208	25	158	-	-	-	-	-	-	-	-
109	11+400 to 11+760	525	-	111	-	-	-	-	-	-	-	-	39.9	-
110	11+760 to 12+120	-	114	-	-	-	51.8	-	-	-	-	140	-	-
	SUB-TOTAL	525	276	744	280	3731.2	51.8	3	-	190	3	240	39.9	44.8

* FOR CONTRACTOR'S INFORMATION ONLY

** SUBSIDIARY TO MBGF BID ITEMS

SEE SHEET 40 FOR ADDITIONAL PAY ITEMS.

NO.	DATE	REVISION	APPROV.

Texas Department of Transportation
LOOP 1604

GRADING SUMMARY

SHEET 1 OF 2

Kimley-Horn and Associates, Inc.

Designed	BHS	DIST	FED REG	FEDERAL AID PROJECT				HIGHWAY
Checked	DKK	15	6					LP1604
Drawn	DKK	COUNTY			CONTROL	SECT	JOB	SHEET
Checked	JKK	BEXAR			2452	01	035	15

LEVELS DISPLAYED

GRADING SUMMARY

SHEET NO.	STATION TO STATION	PREP ROW KM	EXCAVATION (RDWY) M3	EMBANK (ORD COMP) (TY B)(CL 3) M3	FURN & PLAC TPSL(CL 2) (150 MM) M2	DRILL SEED (PERM)(URBAN) (CLAY) M2	FLEX BASE (COMPL IN PLAC) (TY A GR 6) (CL 4) M3	* ASPH MATRL (AE-P) M2	* ONE COURSE SURFACE TRT M2	* ASPH STAB BASE GR 4 (200 mm) M2	* HMA (TY C) M2	* HMA (TY C) (SURF) M2	PLANE ASPH CONC PAV (0-40mm) M2	* ASPH STAB BASE GR 4 (280 mm) M2	RIPRAP CONC (CL B) M3	ANTI GRAFFITI CLEAR (TY II) M2
111	12+120 to 12+480	0.360	556	32698	29993	29993	3130	8128	8128	-	7908	7745	-	-	-	-
112	12+480 to 12+840	0.360	917	21205	29570	29570	3470	9017	9017	-	8782	8547	-	-	-	-
113	12+840 to 13+200	0.360	3932	2320	28880	28880	3441	8952	8952	-	8729	8507	-	-	-	-
114	13+200 to 13+560	0.360	1587	10610	27936	27936	3172	10304	10304	2042	10088	9871	-	-	-	-
115	13+560 to 13+920	0.360	1115	10239	29498	29498	3385	8810	8810	-	8594	8378	-	-	-	-
116	13+920 to 14+280	0.360	9698	2468	27235	27235	4520	11853	11853	-	11647	11435	-	-	-	-
117	14+280 to 14+500	0.220	6042	460	15830	15830	1901	4855	4855	-	4748	4640	-	-	-	-
	SUB-TOTAL	2.38	23847	80000	188942	188942	19578	61919	61919	2042	60496	59123	-	-	-	-
	PROJECT TOTAL	4.74	123406	110144	399714	399714	44242	137104	141978	11969	133964	134482	2586	2590	111	931

SHEET NO.	STATION TO STATION	REPAIR EXIST FLEX PAV STRUCT(200MM) M2	CONC MEDIAN M2	DRVWAYS (ASPH-CONC PAV)(TY I) M2	DRVWAYS (CONC)(TY I) M2	CONC CURB (TY A) M	CONC CURB (TY 1) M	SINGLE GDRAIL TERM EA	MTL BEAM GD FEN (TIM POST) (2.67MM) M	MTL BEAM GD FEN (TIM POST)(BLK OUT) M	TERM ANCHOR SECT (2.67MM) EA	** POST CABLE FENCE M	CONCRETE SIDE-WALK M2	CONCRETE SIDE-WALK (WHLCHR) M2
111	12+120 to 12+480	-	-	126	-	-	-	2	201.4	-	-	-	-	-
112	12+480 to 12+840	-	-	134	-	-	-	2	45.6	-	-	130	-	-
113	12+840 to 13+200	-	-	-	-	-	-	-	-	-	-	100	-	-
114	13+200 to 13+560	-	-	-	-	-	-	-	-	-	-	-	-	-
115	13+560 to 13+920	-	-	-	-	-	-	-	-	-	-	-	-	-
116	13+920 to 14+280	-	-	99	-	-	-	-	-	-	-	-	-	-
117	14+280 to 14+500	-	-	-	-	-	-	-	-	-	-	-	-	-
	SUB-TOTAL			359	-	-	-	4	247	-	-	230	-	-
	PROJECT TOTAL	525	276	1103	280	3731.2	51.8	7	247	190	3	470	39.9	44.8

* FOR CONTRACTOR'S INFORMATION ONLY

** SUBSIDIARY TO MBGF BID ITEMS

SEE SHEET 40 FOR ADDITIONAL PAY ITEMS.

NO.	DATE	REVISION	APPROV.

Texas Department of Transportation
LOOP 1604

GRADING SUMMARY

SHEET 2 OF 2

Kimley-Horn and Associates, Inc.

Designed	BHS	DIST	FED REG	FEDERAL AID PROJECT	HIGHWAY
Checked	DKK	15	6		LP1604
Drawn	DKK	COUNTY	CONTROL / SECT / JOB		SHEET
Checked	JKK	BEXAR	2452 / 01 / 035		16

SCALE: 1:2000

ROW
POT 109+700.00
PC 109+764.04
PRC 109+855.27
PT 109+946.49
PC 110+215.48
109+800
109+900
110+000
110+100
110+200
110+300
S 39° 19' 08.20" W
NBFR-1
NBFR-2
NBFR-3
EXISTING N.B. FRONTAGE RD.
EXISTING LP 1604 MAINLANES
PC 0+000.00
PT 0+139.63
PC 0+198.48
0+300
0+200
0+100
NBEN-1
NBEN-2
PC 10+297.01
9+700
9+800
9+900
10+000
10+100
10+200
10+300
S 35° 19' 08.20" W
SBEX-1
SBEX-2
SBFR
PT 0+139.63
PC 0+205.14
PT 0+314.00
PC 0+360.98
POT 210+206.49
S 43° 19' 08.20" W
S 46° 26' 15.30" W
S 42° 26' 15.06" W
210+300
MATCH LINE STA. 10+320
BEGIN PROJECT
CSJ 2452-01-036
STA. 9+760
EXISTING LP 1604 MAINLANES
EXISTING S.B. FRONTAGE RD.
ROW

LEGEND

- NBFR — N.B. FRONTAGE ROAD
- NBEN — N.B. ENTRANCE
- SBEX — S.B. EXIT
- SBFR — S.B. FRONTAGE ROAD
- SBEN — S.B. ENTRANCE
- NBEX — N.B. EXIT
- CL — ℄ 1604
- MLTC — MAINLANE TEMPORARY CONNECTOR
- STAR — SOUTH TURN AROUND
- NTAR — NORTH TURN AROUND

FOR HORIZONTAL CURVE DATA SEE SHEETS 24-25

STATE OF TEXAS
R. H. SHELLABARGER
75927
REGISTERED PROFESSIONAL ENGINEER

Rebecca A. Shellabarger
9 May 97

NO.	DATE	REVISION	APPROV.

Texas Department of Transportation
LOOP 1604

GEOMETRIC LAYOUT SHEET
BEGIN PROJECT TO STA. 10+320

SHEET 1 OF 7

Kimley-Horn and Associates, Inc.

Designed LMW	DIST	FED REG	FEDERAL AID PROJECT #					HIGHWAY
Checked BHS	15	6	CD 2452-01-035					LP1604
Drawn LMW	COUNTY			CONTROL	SECT	JOB		SHEET
Checked BHS	BEXAR			2452	01	035		17

LEVELS DISPLAYED

1	2	3	4	5	6	7	8	9	10	11	12	13	14	15	16		
17	18	19	20	21	22	23	24	25	26	27	28	29	30	31	32		
33	34	35	36	37	38	39	40	41	42	43	44	45	46	47	48		
49	50	51	52	53	54	55		57	58	59	60	61	62				

FILENAME: G:\67316-03\604geo01.dgn PLOTTED: 28 APR 97 10:26:20

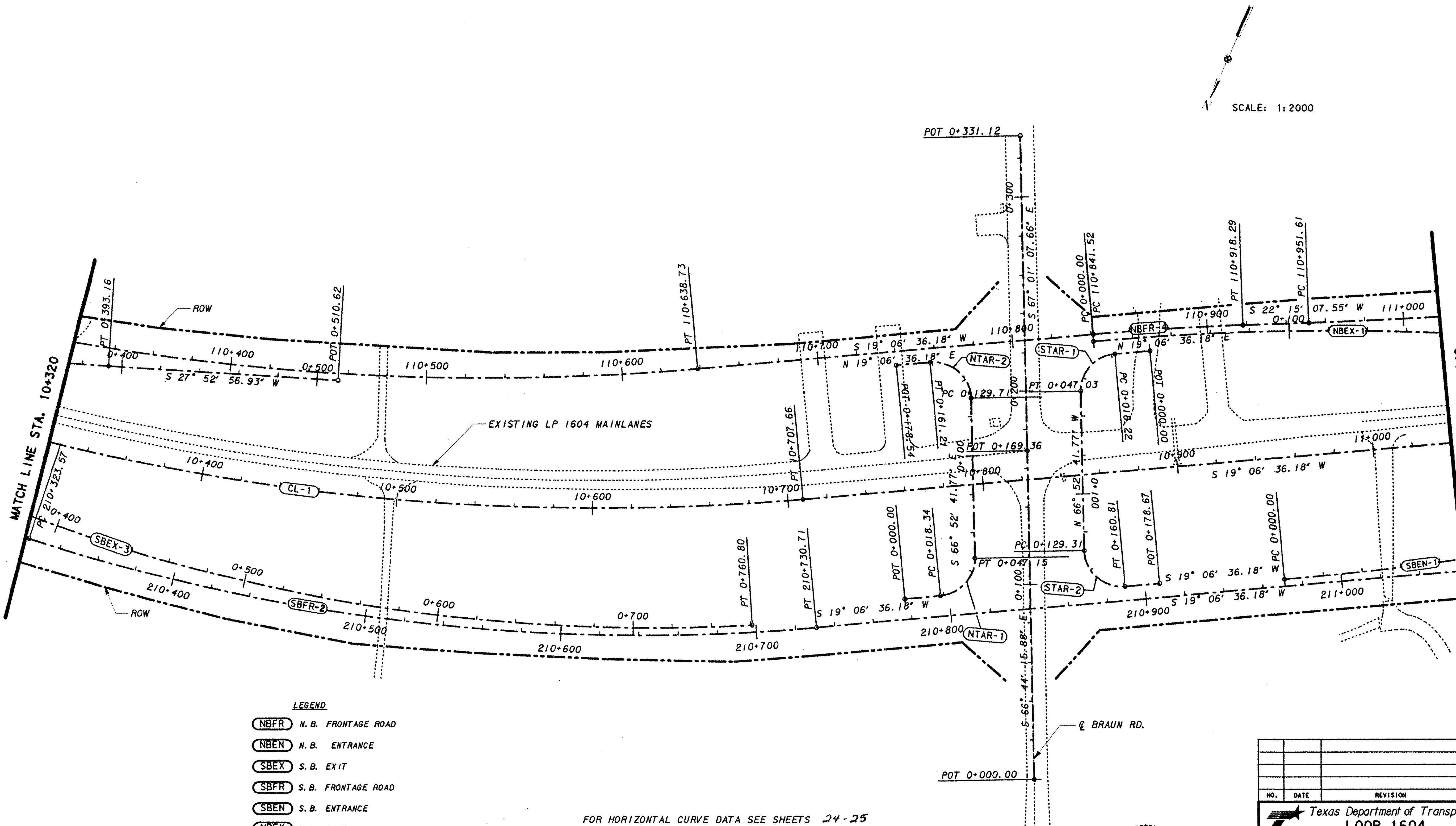

LEGEND

NBFR	N. B. FRONTAGE ROAD
NBEN	N. B. ENTRANCE
SBEX	S. B. EXIT
SBFR	S. B. FRONTAGE ROAD
SBEN	S. B. ENTRANCE
NBEX	N. B. EXIT
CL	℄ 1604
MLTC	MAINLANE TEMPORARY CONNECTOR
STAR	SOUTH TURN AROUND
NTAR	NORTH TURN AROUND

FOR HORIZONTAL CURVE DATA SEE SHEETS 24-25

STATE OF TEXAS
R. H. SHELLABARGER
75927
REGISTERED PROFESSIONAL ENGINEER

Released 7 May 97

NO.	DATE	REVISION	APPROV.

Texas Department of Transportation
LOOP 1604

GEOMETRIC LAYOUT SHEET
STA. 10+320 TO STA. 11+040

SHEET 2 OF 7

Kimley-Horn and Associates, Inc.

Designed LMW	DIST	FED REG	FEDERAL AID PROJECT •			HIGHWAY
Checked BHS	15	6	CD 2452-01-035			LP1604
Drawn LMW	COUNTY		CONTROL	SECT	JOB	SHEET
Checked BHS	BEXAR		2452	01	035	18

LEVELS DISPLAYED

1	2	3	4	5	6	7	8	9	10	11	12	13	14	15	16
17	18	19	20	21	22	23	24	25	26	27	28	29	30	31	32
33	34	35	36	37	38	39	40	41	42	43	44	45	46	47	48
49	50	51	52	53	54	55		57	58	59	60	61	62		

FILENAME: G:\67316-03\604geo02.dgn PLOTTED: 28 APR 97 10:29:37

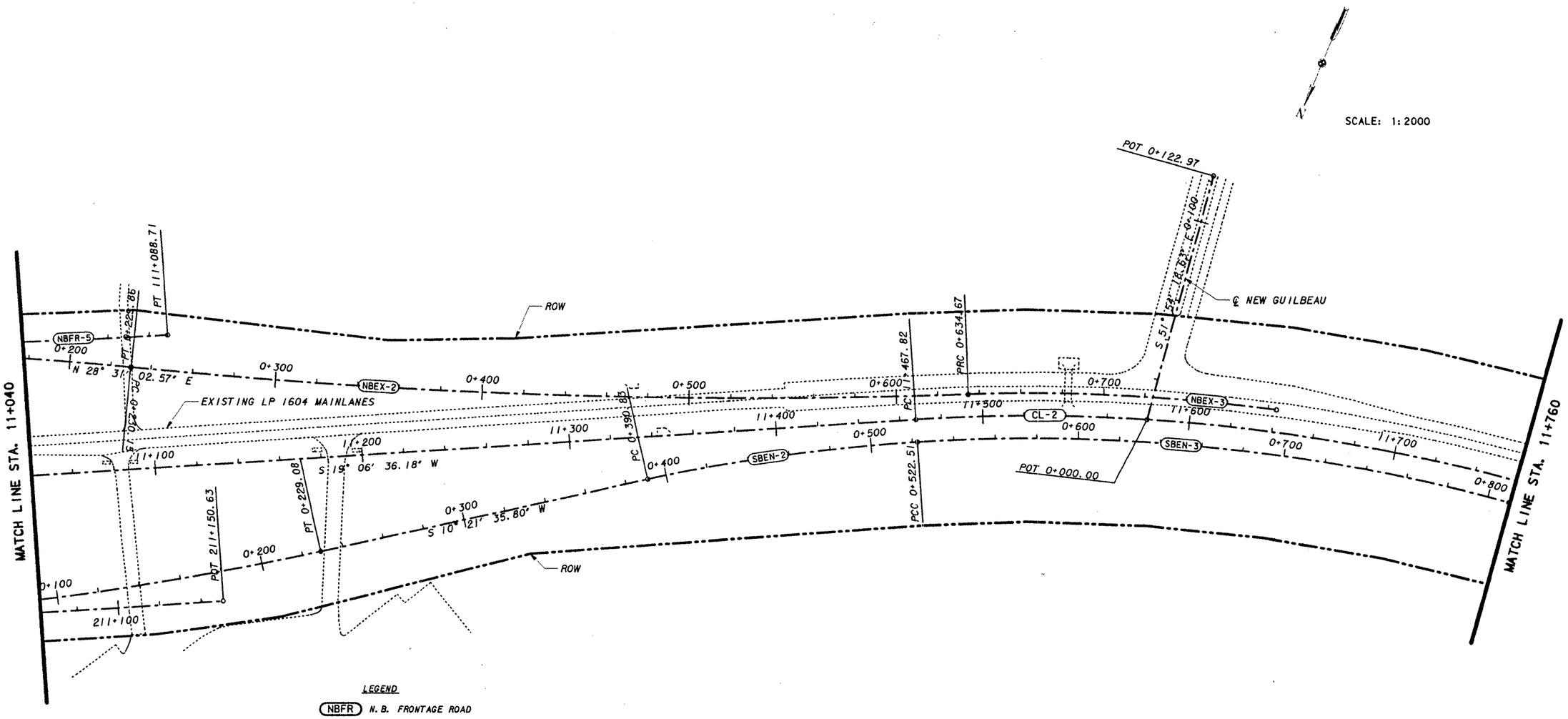

LEGEND

- NBFR — N. B. FRONTAGE ROAD
- NBEN — N. B. ENTRANCE
- SBEX — S. B. EXIT
- SBFR — S. B. FRONTAGE ROAD
- SBEN — S. B. ENTRANCE
- NBEX — N. B. EXIT
- CL — ℄ 1604
- MLTC — MAINLANE TEMPORARY CONNECTOR
- STAR — SOUTH TURN AROUND
- NTAR — NORTH TURN AROUND

FOR HORIZONTAL CURVE DATA SEE SHEETS 24-25

STATE OF TEXAS
R. H. SHELLABARGER
75927
REGISTERED
PROFESSIONAL ENGINEER

Rebecca Shellabarger
2 May 97

NO.	DATE	REVISION	APPROV.

Texas Department of Transportation
LOOP 1604

GEOMETRIC LAYOUT SHEET
STA. 11+040 TO STA. 11+760

SHEET 3 OF 7

Kimley-Horn and Associates, Inc.

Designed LMW	DIST	FED REG	FEDERAL AID PROJECT #				HIGHWAY
Checked BHS	15	6	CD 2452-01-035				LP1604
Drawn LMW	COUNTY			CONTROL	SECT	JOB	SHEET
Checked BHS	BEXAR			2452	01	035	19

FILENAME: G:\67316-03\604geo03.dgn PLOTTED: 28 APR 97 10:31:04

LEVELS DISPLAYED

1	2	3	4	5	6	7	8	9	10	11	12	13	14	15	16	17	18	19	20	21	22	23	24	25	26	27	28	29	30	31	32
33	34	35	36	37	38	39	40	41	42	43	44	45	46	47	48	49	50	51	52	53	54	55		57	58	59	60	61	62		

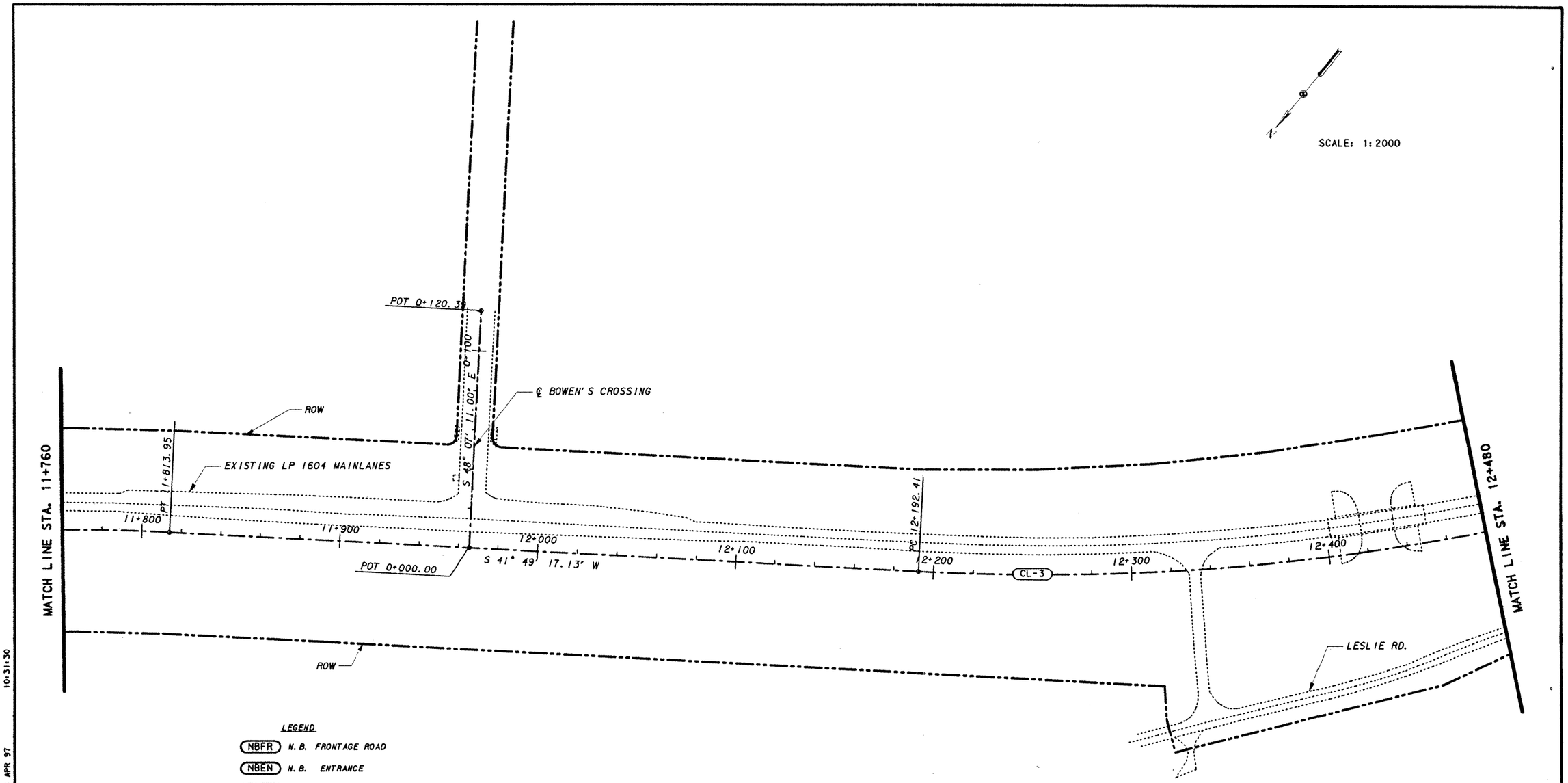

LEGEND

- NBFR N.B. FRONTAGE ROAD
- NBEN N.B. ENTRANCE
- SBEX S.B. EXIT
- SBFR S.B. FRONTAGE ROAD
- SBEN S.B. ENTRANCE
- NBEX N.B. EXIT
- CL ℄ 1604
- MLTC MAINLANE TEMPORARY CONNECTOR
- STAR SOUTH TURN AROUND
- NTAR NORTH TURN AROUND

FOR HORIZONTAL CURVE DATA SEE SHEETS 24-25

STATE OF TEXAS
R. H. SHELLABARGER
75927
REGISTERED
PROFESSIONAL ENGINEER

Rebecca H. Shellabarger
27 May 97

NO.	DATE	REVISION	APPROV.

Texas Department of Transportation
LOOP 1604

GEOMETRIC LAYOUT SHEET
STA. 11+760 TO STA. 12+480

SHEET 4 OF 7

Kimley-Horn and Associates, Inc.

Designed LMW	DIST	FED REG	FEDERAL AID PROJECT #			HIGHWAY
Checked BHS	15	6	CD 2452-01-035			LP1604
Drawn LMW	COUNTY		CONTROL	SECT	JOB	SHEET
Checked BHS	BEXAR		2452	01	035	20

FILENAME: G:\67316-03\604geo04.dgn PLOTTED: 28 APR 97 10:31:30

LEVELS DISPLAYED

1	2	3	4	5	6	7	8	9	10	11	12	13	14	15	16																
17	18	19	20	21	22	23	24	25	26	27	28	29	30	31	32																
33	34	35	36	37	38	39	40	41	42	43	44	45	46	47	48																
49	50	51	52	53	54	55		57	58	59	60	61	62																		

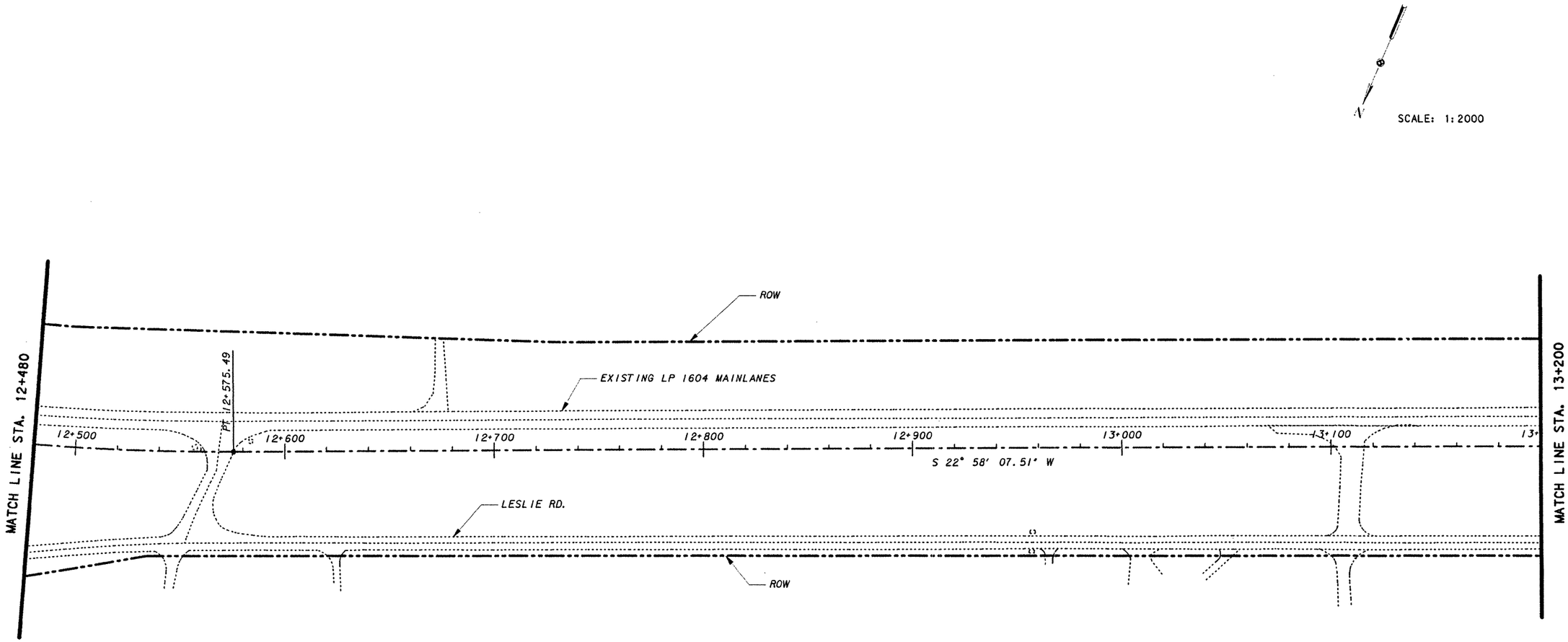

LEGEND

- NBFR N. B. FRONTAGE ROAD
- NBEN N. B. ENTRANCE
- SBEX S. B. EXIT
- SBFR S. B. FRONTAGE ROAD
- SBEN S. B. ENTRANCE
- NBEX N. B. EXIT
- CL ℄ 1604
- MLTC MAINLANE TEMPORARY CONNECTOR
- STAR SOUTH TURN AROUND
- NTAR NORTH TURN AROUND

FOR HORIZONTAL CURVE DATA SEE SHEETS 24-25

NO.	DATE	REVISION	APPROV.

Texas Department of Transportation
LOOP 1604

GEOMETRIC LAYOUT SHEET
STA. 12+480 TO STA. 13+200

SHEET 5 OF 7

Kimley-Horn and Associates, Inc.

Designed LMW	DIST	FED REG	FEDERAL AID PROJECT #	HIGHWAY
Checked BHS	15	6	CD 2452-01-035	LP1604

Drawn LMW	COUNTY	CONTROL	SECT	JOB	SHEET
Checked BHS	BEXAR	2452	01	035	21

STATE OF TEXAS
R. H. SHELLABARGER
75927
REGISTERED
PROFESSIONAL ENGINEER

Rebecca Shellabarger
2 May 97

LEVELS DISPLAYED

FILENAME: G:\67316-03\604geo05.dgn PLOTTED: 28 APR 97 10:32:08

SCALE: 1:2000

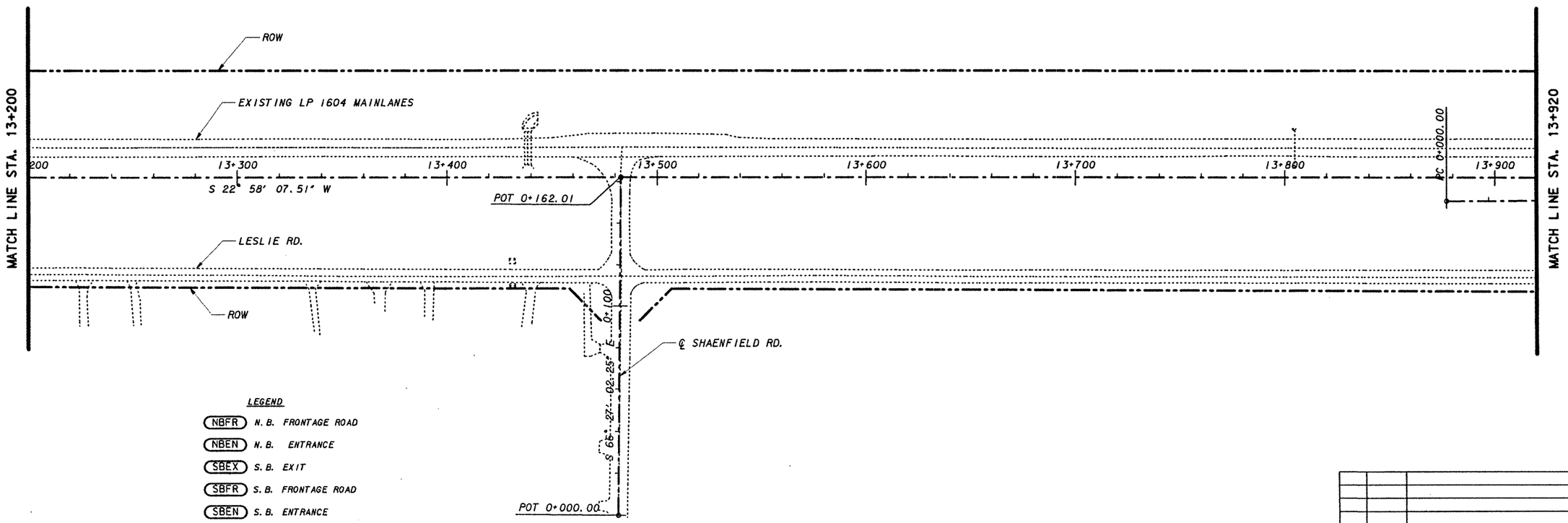

LEGEND

NBFR	N. B. FRONTAGE ROAD
NBEN	N. B. ENTRANCE
SBEX	S. B. EXIT
SBFR	S. B. FRONTAGE ROAD
SBEN	S. B. ENTRANCE
NBEX	N. B. EXIT
CL	℄ 1604
MLTC	MAINLANE TEMPORARY CONNECTOR
STAR	SOUTH TURN AROUND
NTAR	NORTH TURN AROUND

FOR HORIZONTAL CURVE DATA SEE SHEETS 24-25

STATE OF TEXAS
R. H. SHELLABARGER
75927
REGISTERED
PROFESSIONAL ENGINEER

NO.	DATE	REVISION	APPROV.

Texas Department of Transportation
LOOP 1604

GEOMETRIC LAYOUT SHEET
STA. 13+200 TO STA. 13+920

SHEET 6 OF 7

Kimley-Horn and Associates, Inc.

Designed LMW	DIST	FED REG	FEDERAL AID PROJECT #					HIGHWAY
Checked BHS	15	6	CD 2452-01-035					LP1604
Drawn LMW	COUNTY			CONTROL	SECT	JOB	SHEET	
Checked BHS	BEXAR			2452	01	035	22	

FILENAME: G:\67316-03\604pec06.dgn PLOTTED: 28 APR 97 10:33:10

LEVELS DISPLAYED

1	2	3	4	5	6	7	8	9	10	11	12	13	14	15	16	17	18	19	20	21	22	23	24	25	26	27	28	29	30	31	32
33	34	35	36	37	38	39	40	41	42	43	44	45	46	47	48	49	50	51	52	53	54	55	56	57	58	59	60	61	62	63	

N

SCALE: 1:2000

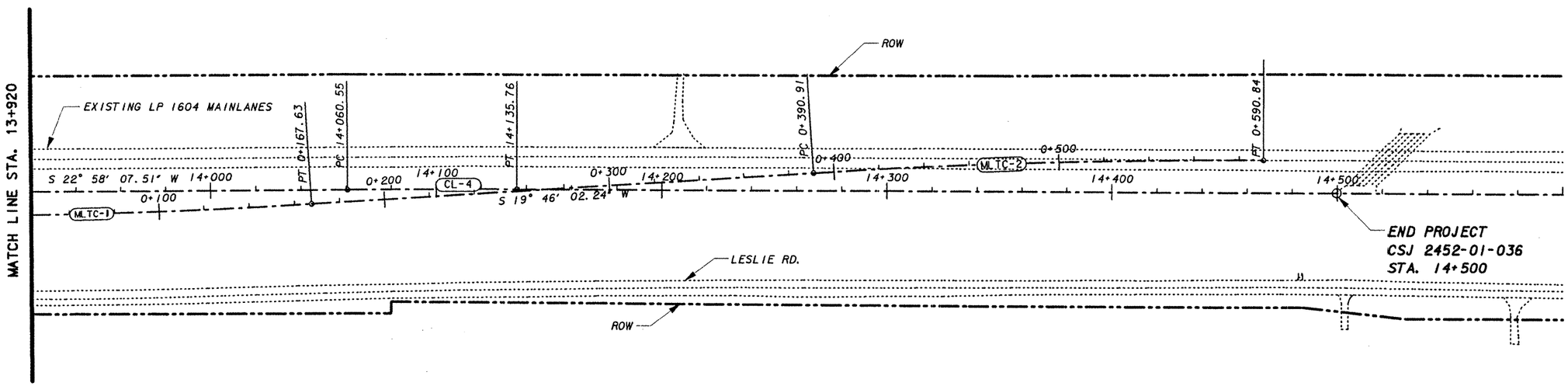

LEGEND

NBFR	N. B. FRONTAGE ROAD
NBEN	N. B. ENTRANCE
SBEX	S. B. EXIT
SBFR	S. B. FRONTAGE ROAD
SBEN	S. B. ENTRANCE
NBEX	N. B. EXIT
CL	℄ 1604
ML TC	MAINLANE TEMPORARY CONNECTOR
STAR	SOUTH TURN AROUND
NTAR	NORTH TURN AROUND

FOR HORIZONTAL CURVE DATA SEE SHEETS 24-25

STATE OF TEXAS
R. H. SHELLABARGER
75927
REGISTERED
PROFESSIONAL ENGINEER

Rebecca H. Shellabarger
2 May 97

NO.	DATE	REVISION	APPROV.

Texas Department of Transportation
LOOP 1604

GEOMETRIC LAYOUT SHEET
STA. 13+920 TO END PROJECT

SHEET 7 OF 7

Kimley-Horn and Associates, Inc.

Designed	LMW	DIST	FED REG	FEDERAL AID PROJECT #				HIGHWAY
Checked	BHS	15	6	CD 2452-01-035				LP1604
Drawn	LMW	COUNTY		CONTROL	SECT	JOB		SHEET
Checked	BHS	BEXAR		2452	01	035		23

LEVELS DISPLAYED

1	2	3	4	5	6	7	8	9	10	11	12	13	14	15	16
17	18	19	20	21	22	23	24	25	26	27	28	29	30	31	32
33	34	35	36	37	38	39	40	41	42	43	44	45	46	47	48
49	50	51	52	53	54	55	56	57	58	59	60	61	62	63	

FILENAME: G:\67316-03\604geo07.dgn PLOTTED: 28 APR 97 10:33:49

LEVELS DISPLAYED																
1	2	3	4	5	6	7	8	9	10	11	12	13	14	15	16	
17	18	19	20	21	22	23	24	25	26	27	28	29	30	31	32	
33	34	35	36	37	38	39	40	41	42	43	44	45	46	47	48	
49	50	51	52	53	54	55	56	57	58	59	60	61	62	63		

FILENAME: G:\67316-03\604HORZ1.dgn PLOTTED: 28 APR 97 10:39:10

CURVE NO.	STATION	COORDINATE N	COORDINATE E	CURVE CENTER COORDINATE N	CURVE CENTER COORDINATE E	Δ OR TAN. BRG.	L	T	R
	℄ 1604								
						S 39° 19' 08.20" W			
	PC 10+297.012	4,189,946.0427	631,151.8637						1,164.250
CL-1	PI 10+504.490	4,189,785.5315	631,020.3982	4,189,208.3311	632,052.5633	20° 12' 32.02" LT	410.645	207.478	
	PT 10+707.657	4,189,589.4876	630,952.4734						
						S 19° 06' 36.18" W			
						S 19° 06' 36.18" W			
	PC 11+467.824	4,188,871.2118	630,703.6070						873.190
CL-2	PI 11+643.188	4,188,705.5125	630,646.1959	4,189,157.0799	629,878.5372	22° 42' 40.95" RT	346.122	175.363	
	PT 11+813.947	4,188,574.8271	630,529.2617						
						S 41° 49' 17.13" W			
						S 41° 49' 17.13" W			
	PC 12+192.405	4,188,292.7895	630,276.9012						1,164.250
CL-3	PI 12+385.696	4,188,148.7445	630,148.0131	4,187,516.4546	631,144.5314	18° 51' 09.62" LT	383.086	193.290	
	PT 12+575.492	4,187,970.7788	630,072.5856						
						S 22° 58' 07.51" W			
						S 22° 58' 07.51" W			
	PC 14+060.548	4,186,603.4610	629,493.0735						6,985.520
CL-4	PI 14+098.152	4,186,568.8377	629,478.3991	4,189,329.4139	623,061.3809	0° 37' 00.72" RT	75.209	37.605	
	PT 14+135.756	4,186,534.3744	629,463.3528						
						S 23° 35' 08.23" W			
	POT 14+500.000	4,186,200.5586	629,317.6120						
	℄ N.B. FRONTAGE ROAD								
	POT 109+700.000	4,190,374.6905	631,570.7103						
						S 39° 19' 08.20" W			
	PC 109+764.041	4,190,325.1466	631,530.1317						
NBFR-1	PI 109+809.658	4,190,289.8554	631,501.2268	4,191,909.2384	629,596.0549	2° 05' 26.61" RT	91.225	45.618	2,500.000
	PT 109+855.266	4,190,255.6423	631,471.0535						
						S 41° 24' 34.81" W			
						S 41° 24' 34.81" W			
	PC 109+855.266	4,190,255.6423	631,471.0535						
NBFR-2	PI 109+900.883	4,190,221.4291	631,440.8803	4,188,602.0461	633,346.0521	2° 05' 26.61" LT	91.225	45.618	2,500.000
	PT 109+946.491	4,190,186.1379	631,411.9753						
						S 39° 19' 08.20" W			
						S 39° 19' 08.20" W			
	PC 110+215.475	4,189,978.0433	631,241.5369						
NBFR-3	PI 110+429.324	4,189,812.6035	631,106.0346	4,189,217.6793	632,169.8938	20° 12' 32.02" LT	423.254	213.849	1,200.000
	PT 110+638.729	4,189,610.5397	631,036.0240						
						S 19° 06' 36.18" W			
						S 19° 06' 36.18" W			
	PC 110+841.515	4,189,418.9291	630,969.6353						
NBFR-4	PI 110+879.912	4,189,382.6482	630,957.0648	4,189,877.2662	629,646.7872	3° 08' 31.37" RT	76.775	38.397	1,400.000
	PT 110+918.290	4,189,347.1107	630,942.5245						
						S 22° 15' 07.55" W			
						S 22° 15' 07.55" W			
	PC 110+951.613	4,189,316.2688	630,929.9054						
NBFR-5	PI 111+020.180	4,189,252.8091	630,903.9406	4,188,369.5625	633,243.7220	3° 08' 31.37" LT	137.098	68.566	
	PT 111+088.711	4,189,188.0216	630,881.4932						
						S 19° 06' 36.18" W			
	℄ S.B. FRONTAGE ROAD								
	POT 210+206.490	4,190,044.4763	631,175.1038						
						S 42° 26' 15.06" W			
	PC 210+323.572	4,189,958.0685	631,096.0988						
SBFR-2	PI 210+530.002	4,189,805.7203	630,956.8028	4,189,283.2827	631,834.1125	23° 19' 38.88" LT	407.141	206.430	1,000.000
	PT 210+730.713	4,189,610.6663	630,889.2210						
						S 19° 06' 36.18" W			
	POT 211+150.627	4,189,213.8925	630,751.7477						
	N.B. ENTRANCE								
						S 39° 19' 08.20" W			
	PC 0+000.000	4,190,209.1124	631,381.5477						
NBEN-1	PI 0+069.842	4,190,155.0808	631,337.2936	4,188,941.8390	632,928.8092	4° 00' 00.00" LT	139.626	69.842	2,000.000
	PT 0+139.626	4,190,098.0939	631,296.9163						
						S 35° 19' 08.20" W			
						S 35° 19' 08.20" W			
	PC 0+198.476	4,190,050.0754	631,262.8934						
NBEN-2	PI 0+295.956	4,189,970.5369	631,206.5376	4,189,182.8842	632,486.8132	7° 26' 11.27" LT	194.686	97.480	1,500.000
	PT 0+393.163	4,189,884.3735	631,160.9502						
						S 27° 52' 56.93" W			
	POT 0+510.617	4,189,780.5543	630,106.0214						
	S.B. EXIT								
						S 39° 19' 08.20" W			
	PC 0+000.000	4,190,231.9698	631,371.8316						
SBEX-1	PI 0+069.842	4,190,177.9382	631,327.5774	4,191,499.2432	629,824.5701	4° 00' 00.00" RT	139.626	69.842	2,000.000
	PT 0+139.626	4,190,127.1253	631,279.6620						
						S 43° 19' 08.20" W			
						S 43° 19' 08.20" W			
	PC 0+205.143	4,190,079.4586	631,234.7134						
SBEX-2	PI 0+259.587	4,190,039.8481	631,197.3617	4,191,451.5765	629,779.6215	3° 07' 07.10" RT	108.861	54.444	2,000.000
	PT 0+314.004	4,190,002.3284	631,157.9103						
						S 46° 26' 15.30" W			
						S 46° 26' 15.30" W			
	PC 0+360.978	4,189,969.9570	631,123.8723						
SBEX-3	PI 0+564.241	4,189,829.8794	630,976.5830	4,189,317.7954	631,744.1023	25° 27' 11.64" LT	399.818	203.263	900.000
	PT 0+760.796	4,189,640.0970	630,903.7918						
						S 20° 59' 03.66" W			

Texas Department of Transportation
LOOP 1604

NO.	DATE	REVISION	APPROV.

Kimley-Horn and Associates, Inc.

HORIZONTAL CURVE DATA

SHEET 1 OF 2

Designed LMW	DIST 15	FED. REG. 6	FEDERAL AID PROJECT CD 2452-01-035	HIGHWAY LP1604
Checked BHS				
Drawn LMW	COUNTY BEXAR		CONTROL SECT 2452	JOB 01	SHEET 035	27
Checked JKK				

R. H. SHELLABARGER 75527 REGISTERED PROFESSIONAL ENGINEER STATE OF TEXAS

Rebecca Shellabarger 28 Apr 97

LEVELS DISPLAYED																
1	2	3	4	5	6	7	8	9	10	11	12	13	14	15	16	
17	18	19	20	21	22	23	24	25	26	27	28	29	30	31	32	
33	34	35	36	37	38	39	40	41	42	43	44	45	46	47	48	
49	50	51	52	53	54	55	56	57	58	59	60	61	62	63		

FILENAME: g:\67316-03\604horz2.dgn PLOTTED: 28 APR 97 14:33:08

CURVE NO.	STATION	COORDINATE N	COORDINATE E	CURVE CENTER COORDINATE N	CURVE CENTER COORDINATE E	Δ OR TAN. BRG.	L	T	R
	N. B. EXIT								
						S 19° 06' 36.18" W			
	PC 0+000.000	4,189,420.3828	630,966.3290						
NBEX-1	PI 0+115.191	4,189,311.5397	630,928.6173	4,189,878.7199	629,643.4809	9° 24' 26.39" RT	229.864	115.191	1,400.000
	PT 0+229.864	4,189,210.3245	630,873.6222						
						S 28° 31' 02.57" W			
						S 28° 31' 02.57" W			
	PC 0+230.154	4,189,210.5793	630,873.7606						
NBEX-2	PI 0+432.719	4,189,032.5911	630,777.0510	4,187,778.3033	633,509.7776	7° 43' 32.46" LT	404.516	202.565	3,000.000
	PT 0+634.670	4,188,843.2178	630,705.1462						
						S 20° 47' 30.11" W			
						S 20° 47' 30.11" W			
	PC 0+634.670	4,188,843.2177	630,705.1462						
NBEX-3	PI 0+798.783	4,188,689.7929	630,646.8910	4,189,157.0799	629,878.5372	21° 01' 47.02" RT	324.531	164.112	884.190
	PT 0+959.202	4,188,567.4922	630,537.4592						
						S 41° 49' 17.13" W			
	POT 1+245.255	4,188,354.314.	630,346.7158						
	S. B. ENTRANCE								
						S 19° 06' 36.18" W			
	PC 0+000.000	4,189,382.4801	630,813.9695						
SBEN-1	PI 0+114.762	4,189,274.0427	630,776.3984	4,188,891.4046	632,231.3068	8° 45' 00.38" LT	229.077	114.762	1,500.000
	PT 0+229.077	4,189,161.1518	630,755.7606						
						S 10° 21' 35.80" W			
						S 10° 21' 35.80" W			
	PC 0+390.834	4,189,002.0324	630,726.6717						
SBEN-2	PI 0+456.798	4,188,937.1433	630,714.8092	4,189,157.0819	629,878.5346	8° 45' 00.38" RT	131.673	65.965	862.193
	PT 0+522.506	4,188,874.8139	630,693.2135						
						S 19° 06' 36.18" W			
						S 19° 06' 36.18" W			
	PC 0+522.506	4,188,874.8139	630,693.2135						
SBEN-3	PI 0+695.660	4,188,711.2020	630,636.5256	4,189,157.0808	629,878.5375	22° 42' 40.95" RT	341.762	173.154	862.190
	PT 0+864.268	4,188,582.1629	630,521.0645						
						S 41° 49' 17.13" W			
	NTAR								
	POT 0+000.000	4,189,563.1533	630,884.1888						
						S 19° 06' 36.18" W			
	PC 0+018.338	4,189,545.8262	630,878.1853						
NTAR-1	PI 0+036.238	4,189,528.9120	630,872.3250	4,189,539.5404	630,896.3273	85° 59' 17.95" LT	28.815	17.901	19.200
	PT 0+047.153	4,189,521.8827	630,888.7877						
						S 66° 52' 41.77" E			
						S 66° 52' 41.77" E			
	PC 0+129.709	4,189,489.4638	630,964.7129						
NTAR-2	PI 0+150.303	4,189,481.3770	630,983.6523	4,189,507.1216	630,972.2525	94° 00' 42.05" LT	31.504	20.594	19.200
	PT 0+161.213	4,189,500.8358	630,990.3944						
						N 19° 06' 36.18" E			
	POT 0+178.539	4,189,517.2071	630,996.0667						
	STAR								
	POT 0+000.000	4,189,395.9120	630,949.9228						
						N 19° 06' 36.18" E			
	PC 0+018.217	4,189,413.1249	630,955.8867						
STAR-1	PI 0+036.117	4,189,430.0391	630,961.7471	4,189,419.4107	630,937.7448	85° 59' 17.96" LT	28.815	17.901	19.200
	PT 0+047.032	4,189,437.0684	630,945.2844						
						N 66° 52' 41.77" W			
						N 66° 52' 41.77" W			
	PC 0+129.305	4,189,469.3761	630,869.6195						
STAR-2	PI 0+149.899	4,189,477.4630	630,850.6801	4,189,451.7184	630,862.0799	94° 00' 42.05" LT	31.504	20.594	19.200
	PT 0+160.809	4,189,458.0042	630,843.9380						
						S 19° 06' 36.18" W			
	POT 0+178.670	4,189,441.1280	630,838.0908						
	M. L. TEMPORARY CONNECTOR								
						S 22° 58' 07.51" W			
	PC 0+000.000	4,186,776.7114	629,554.5553						
MLTC-1	PI 0+083.836	4,186,699.5222	629,521.8401	4,185,606.0243	632,316.7087	3° 12' 05.27" LT	167.628	83.836	3,000.000
	PT 0+167.628	4,186,620.6264	629,493.4867						
						S 19° 46' 02.24" W			
						S 19° 46' 02.24" W			
	PC 0+390.910	4,186,410.5015	629,417.9726						
MLTC-2	PI 0+490.911	4,186,316.3935	629,384.1523	4,187,425.1036	626,594.7506	3° 49' 05.99" RT	199.927	100.001	3,000.000
	PT 0+590.838	4,186,224.7466	629,344.1401						
						S 23° 35' 08.23" W			

STATE OF TEXAS
R. N. SHELL BARGER
No. 75527
REGISTERED
PROFESSIONAL ENGINEER

Texas Department of Transportation
LOOP 1604

Kimley-Horn and Associates, Inc.

HORIZONTAL CURVE DATA

SHEET 2 OF 2

NO.	DATE	REVISION	APPROV.

Designed LAW	DIST 15	FED. RD. DIV. 6	FEDERAL AID PROJECT CD 2452-01-035	* HIGHWAY LP1604
Checked BHS	COUNTY BEXAR		CONTROL SECT 2452	JOB 01 035
Drawn LAW				SHEET 2.5
Checked JKK				

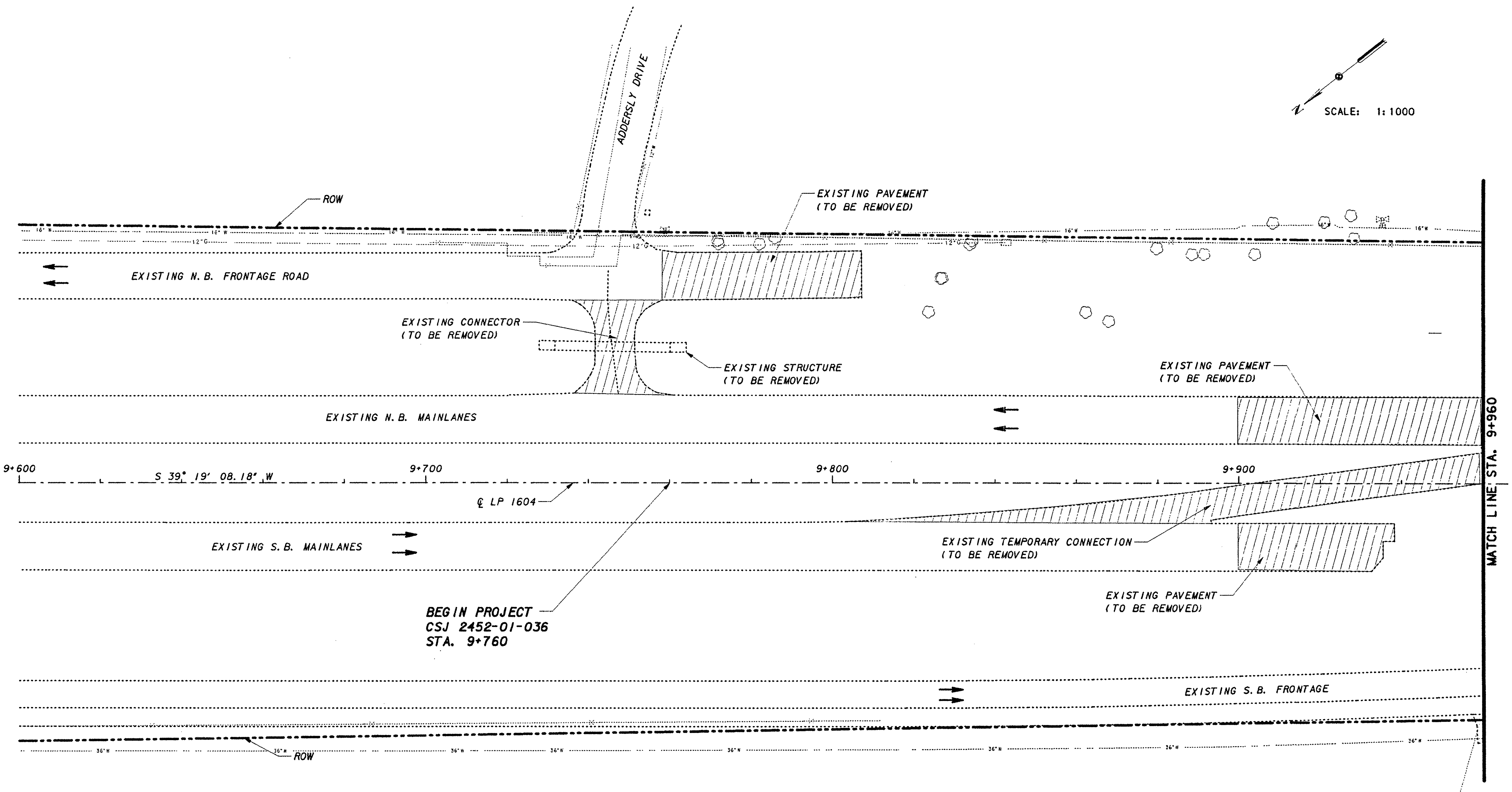

NOTES:

ALL REMOVAL ITEMS SHALL BE CONSIDERED SUBSIDIARY TO ITEM 100 PREP ROW UNLESS OTHERWISE NOTED.

UTILITY LEGEND:

Symbol	Meaning
16"W	WATER
Tel	TELEPHONE
UG Tel	UNDERGROUND TELEPHONE
6"G	GAS LINE
—X—	OH 1 PHASE ELEC
—//—	OH 2 PHASE ELEC
—XXX—	OH 3 PHASE ELEC
— — SS — —	SANITARY SEWER

STATE OF TEXAS
J. KEVIN KENNEDY
72984
REGISTERED PROFESSIONAL ENGINEER

J. Kevin Kennedy
5-2-97

NO.	DATE	REVISION	APPROV.

Texas Department of Transportation
LOOP 1604

EXISTING/REMOVAL PLAN SHEET
BEGIN PROJECT TO STA. 9+960

SHEET 1 OF 14

Kimley-Horn and Associates, Inc.

		DIST	FED REG	FEDERAL AID PROJECT •			HIGHWAY
Designed	LMW						
Checked	BHS	15	6	CD 2452-01-035			LP1604
Drawn	KWA	COUNTY		CONTROL	SECT	JOB	SHEET
Checked	JKK	BEXAR		2452	01	035	26

FILENAME: G:\67316-03\604RRP01.dgn PLOTTED: 28 APR 97 10:39:51

LEVELS DISPLAYED															
1	2	3	4	5	6	7	8	9	10	11	12	13	14	15	16
17	18	19	20	21	22	23	24	25	26	27	28	29	30	31	32
33	34	35	36	37	38	39	40	41	42	43	44	45	46	47	48
49	50	51	52	53	54	55	56	57	58	59	60	61	62	63	

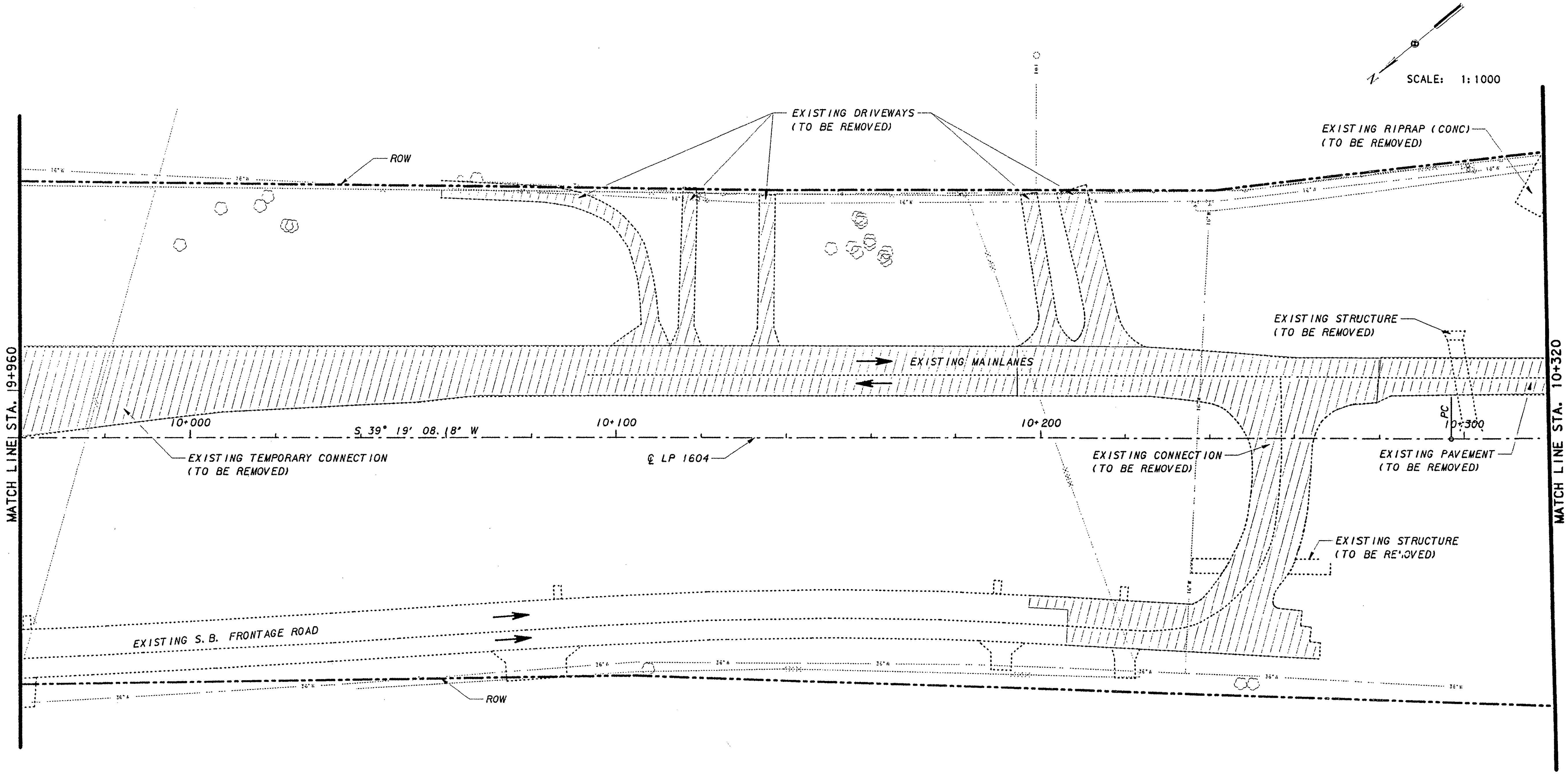

NOTES:

ALL REMOVAL ITEMS SHALL BE CONSIDERED SUBSIDIARY TO ITEM 100 PREP ROW UNLESS OTHERWISE NOTED.

UTILITY LEGEND:

- 16"W — WATER
- Tel — TELEPHONE
- UG Tel — UNDERGROUND TELEPHONE
- 6"G — GAS LINE
- X — OH 1 PHASE ELEC
- // — OH 2 PHASE ELEC
- XXX — OH 3 PHASE ELEC
- SS — SANITARY SEWER

FILENAME: G:\67316-03\604RRP02.dgn PLOTTED: 28 APR 97 10:40:14

LEVELS DISPLAYED

1	2	3	4	5	6	7	8	9	10	11	12	13	14	15	16
17	18	19	20	21	22	23	24	25	26	27	28	29	30	31	32
33	34	35	36	37	38	39	40	41	42	43	44	45	46	47	48
49	50	51	52	53	54	55	56	57	58	59	60	61	62	63	

STATE OF TEXAS
J. KEVIN KENNEDY
72984
REGISTERED PROFESSIONAL ENGINEER

J. Kevin Kennedy 5-2-97

NO.	DATE	REVISION	APPROV.

Texas Department of Transportation
LOOP 1604

EXISTING/REMOVAL PLAN SHEET
STA. 9+960 TO STA. 10+320

SHEET 2 OF 14

Kimley-Horn and Associates, Inc.

		DIST	FED REG	FEDERAL AID PROJECT •			HIGHWAY
Designed	LMW						
Checked	BHS	15	6	CD 2452-01-035			LP1604
Drawn	KWA	COUNTY		CONTROL	SECT	JOB	SHEET
Checked	JKK	BEXAR		2452	01	035	27

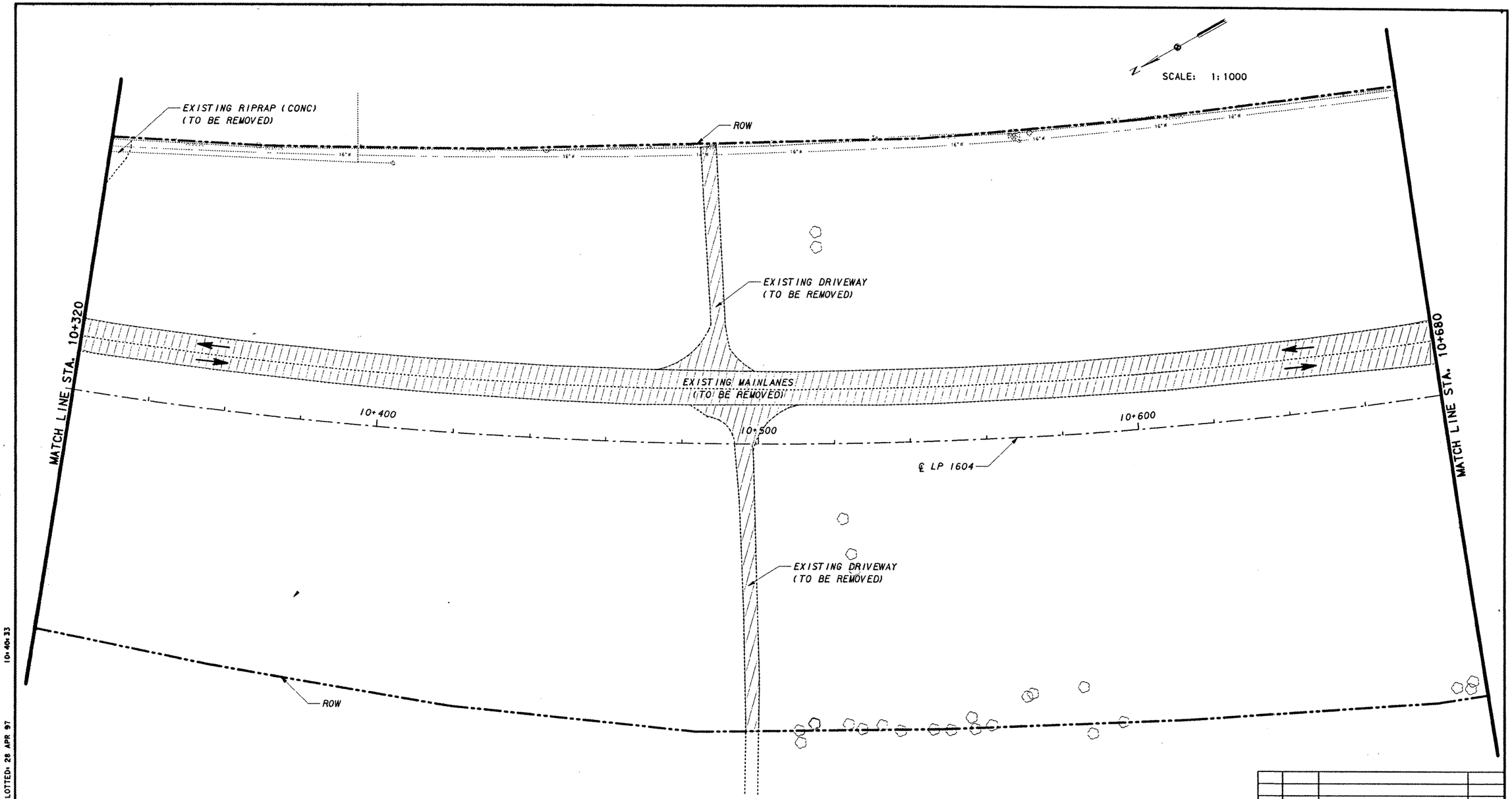

NOTES:

ALL REMOVAL ITEMS SHALL BE CONSIDERED SUBSIDIARY TO ITEM 100 PREP ROW UNLESS OTHERWISE NOTED.

UTILITY LEGEND:

- 16"W — WATER
- Tel — TELEPHONE
- UG Tel — UNDERGROUND TELEPHONE
- 6"G — GAS LINE
- OH 1 PHASE ELEC
- OH 2 PHASE ELEC
- OH 3 PHASE ELEC
- SS — SANITARY SEWER

LEVELS DISPLAYED

1	2	3	4	5	6	7	8	9	10	11	12	13	14	15	16																
17	18	19	20	21	22	23	24	25	26	27	28	29	30	31	32																
33	34	35	36	37	38	39	40	41	42	43	44	45	46	47	48																
49	50	51	52	53	54	55	56	57	58	59	60	61	62	63																	

FILENAME: G:\67316-03\604RRP03.dgn PLOTTED: 28 APR 97 10:40:33

STATE OF TEXAS
J. KEVIN KENNEDY
72984
REGISTERED PROFESSIONAL ENGINEER

J. Kevin Kennedy
5-2-97

NO.	DATE	REVISION	APPROV.

Texas Department of Transportation
LOOP 1604

EXISTING/REMOVAL PLAN SHEET
STA. 10+320 TO STA. 10+680

SHEET 3 OF 14

Kimley-Horn and Associates, Inc.

Designed	LMW	DIST	FED REG	FEDERAL AID PROJECT #				HIGHWAY
Checked	BHS	15	6	CD 2452-01-035				LP1604
Drawn	KWA	COUNTY		CONTROL	SECT	JOB		SHEET
Checked	JKK	BEXAR		2452	01	035		28

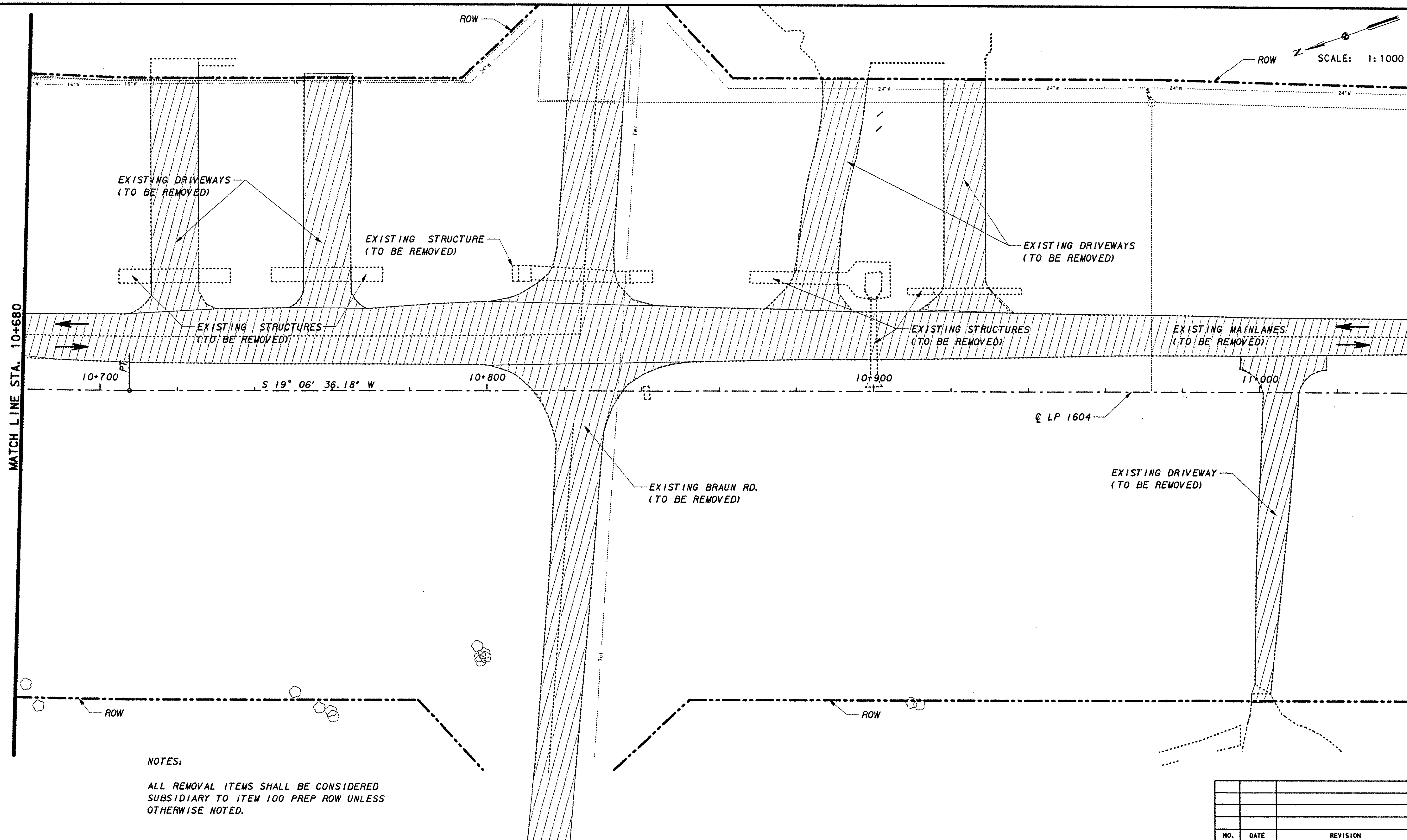

NOTES:

ALL REMOVAL ITEMS SHALL BE CONSIDERED SUBSIDIARY TO ITEM 100 PREP ROW UNLESS OTHERWISE NOTED.

UTILITY LEGEND:

16"W — WATER
Tel — TELEPHONE
UG Tel — UNDERGROUND TELEPHONE
6"G — GAS LINE
—X— OH 1 PHASE ELEC
—//— OH 2 PHASE ELEC
—XXX— OH 3 PHASE ELEC
— — SS — — SANITARY SEWER

NO.	DATE	REVISION	APPROV.

Texas Department of Transportation
LOOP 1604

EXISTING/REMOVAL PLAN SHEET
STA. 10+680 TO STA. 11+040

SHEET 4 OF 14

Kimley-Horn and Associates, Inc.

STATE OF TEXAS
J. KEVIN KENNEDY
72984
REGISTERED PROFESSIONAL ENGINEER
J. Kevin Kennedy 5-2-97

Designed	LMW	DIST	FED REG	FEDERAL AID PROJECT •				HIGHWAY
Checked	BHS	15	6	CD 2452-01-035				LP1604
Drawn	KWA	COUNTY			CONTROL	SECT	JOB	SHEET
Checked	JKK	BEXAR			2452	01	035	29

FILENAME: G:\67316-03\604RRP04.dgn PLOTTED: 28 APR 97 11:01:26

LEVELS DISPLAYED															
1	2	3	4	5	6	7	8	9	10	11	12	13	14	15	16
17	18	19	20	21	22	23	24	25	26	27	28	29	30	31	32
33	34	35	36	37	38	39	40	41	42	43	44	45	46	47	48
49	50	51	52	53	54	55	56	57	58	59	60	61	62	63	

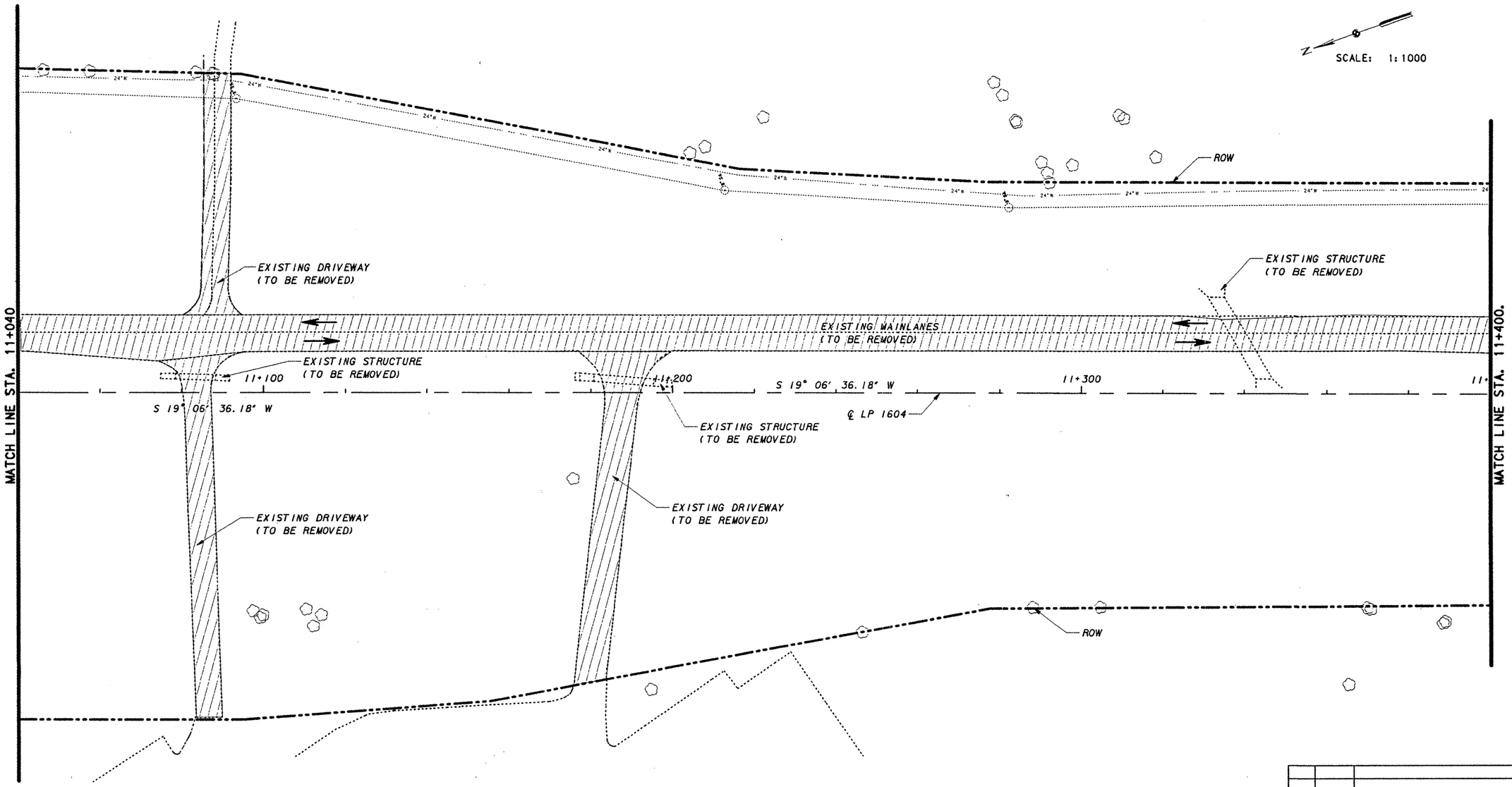

NOTES:

ALL REMOVAL ITEMS SHALL BE CONSIDERED SUBSIDIARY TO ITEM 100 PREP ROW UNLESS OTHERWISE NOTED.

UTILITY LEGEND:

- 16"W — WATER
- Tel — TELEPHONE
- UG Tel — UNDERGROUND TELEPHONE
- 6"G — GAS LINE
- OH 1 PHASE ELEC
- OH 2 PHASE ELEC
- OH 3 PHASE ELEC
- SS — SANITARY SEWER

NO.	DATE	REVISION	APPROV.

Texas Department of Transportation
LOOP 1604

EXISTING/REMOVAL PLAN SHEET
STA. 11+040 TO STA. 11+400

SHEET 5 OF 14

Kimley-Horn and Associates, Inc.

STATE OF TEXAS
J. KEVIN KENNEDY
72984
REGISTERED PROFESSIONAL ENGINEER
J. Kevin Kennedy 5-2-97

Designed	LMW	DIST	FED REG	FEDERAL AID PROJECT •			HIGHWAY
Checked	BHS	15	6	CD 2452-01-035			LP1604
Drawn	KWA	COUNTY		CONTROL	SECT	JOB	SHEET
Checked	JKK	BEXAR		2452	01	035	30

FILENAME: gr\67316-03\604rrp05.dgn PLOTTED: 28 APR 97 10:09:56

LEVELS DISPLAYED

1	2	3	4	5	6	7	8	9	10	11	12	13	14	15	16	17	18	19	20	21	22	23	24	25	26	27	28	29	30	31	32
33	34	35	36	37	38	39	40	41	42	43	44	45	46	47	48	49	50	51	52	53	54	55	56	57	58	59	60	61	62	63	

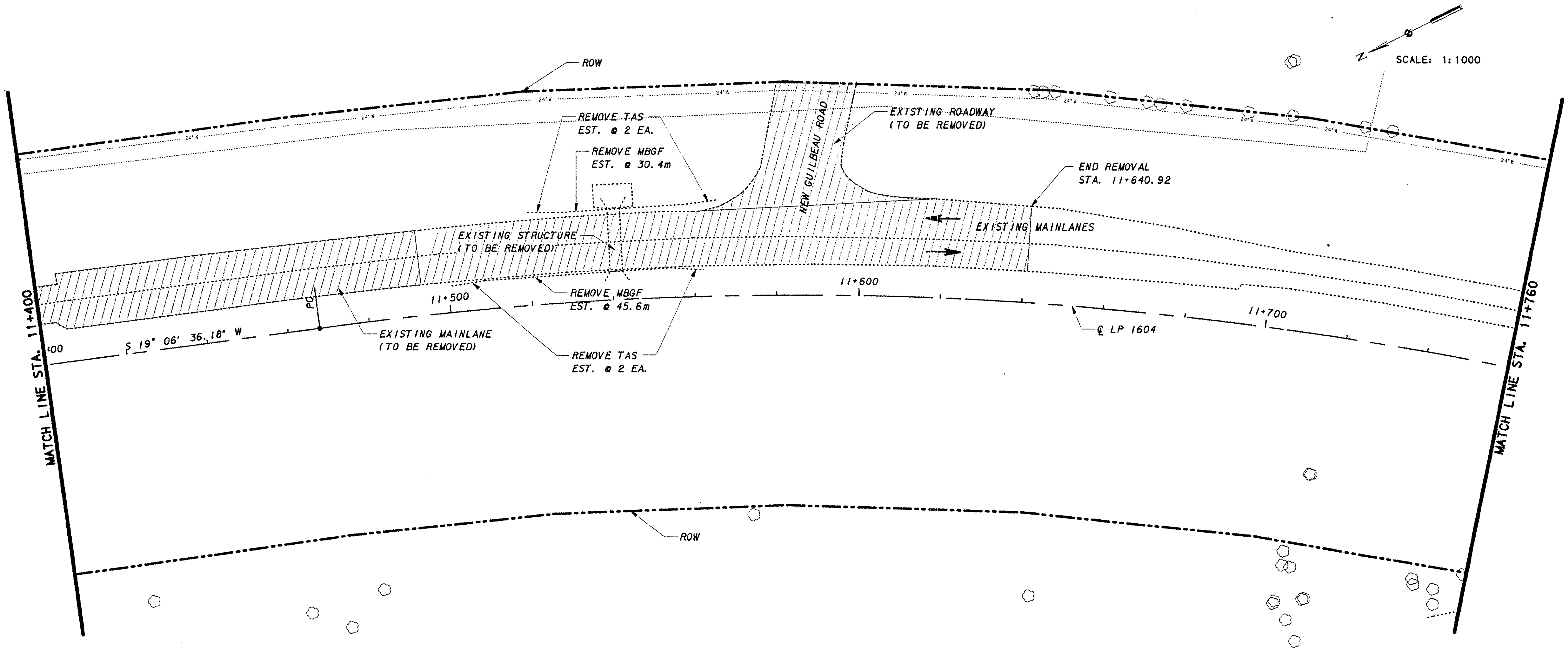

NOTES:

ALL REMOVAL ITEMS SHALL BE CONSIDERED SUBSIDIARY TO ITEM 100 PREP ROW UNLESS OTHERWISE NOTED.

UTILITY LEGEND:

- 16"W — WATER
- Tel — TELEPHONE
- UG Tel — UNDERGROUND TELEPHONE
- 6"G — GAS LINE
- OH 1 PHASE ELEC
- OH 2 PHASE ELEC
- OH 3 PHASE ELEC
- SS — SANITARY SEWER

ESTIMATED QUANTITIES		
ITEM	UNIT	QTY.
REMOVE METAL BEAM GUARD FENCE	M	76.0
REMOVE TERMINAL ANCHOR SECTION	EA	4

STATE OF TEXAS
J. KEVIN KENNEDY
72984
REGISTERED PROFESSIONAL ENGINEER
5-2-97

Texas Department of Transportation
LOOP 1604

EXISTING/REMOVAL PLAN SHEET
STA. 11+400 TO STA. 11+760

SHEET 6 OF 14

Kimley-Horn and Associates, Inc.

Designed	LMW	DIST	FED REG	FEDERAL AID PROJECT •			HIGHWAY
Checked	BHS	15	6	CD 2452-01-035			LP1604
Drawn	KWA	COUNTY		CONTROL	SECT	JOB	SHEET
Checked	JKK	BEXAR		2452	01	035	31

FILENAME: g:\67316-03\604rrp06.dgn PLOTTED: 28 APR 97 10:18:01

LEVELS DISPLAYED															
1	2	3	4	5	6	7	8	9	10	11	12	13	14	15	16
17	18	19	20	21	22	23	24	25	26	27	28	29	30	31	32
33	34	35	36	37	38	39	40	41	42	43	44	45	46	47	48
49	50	51	52	53	54	55	56	57	58	59	60	61	62	63	

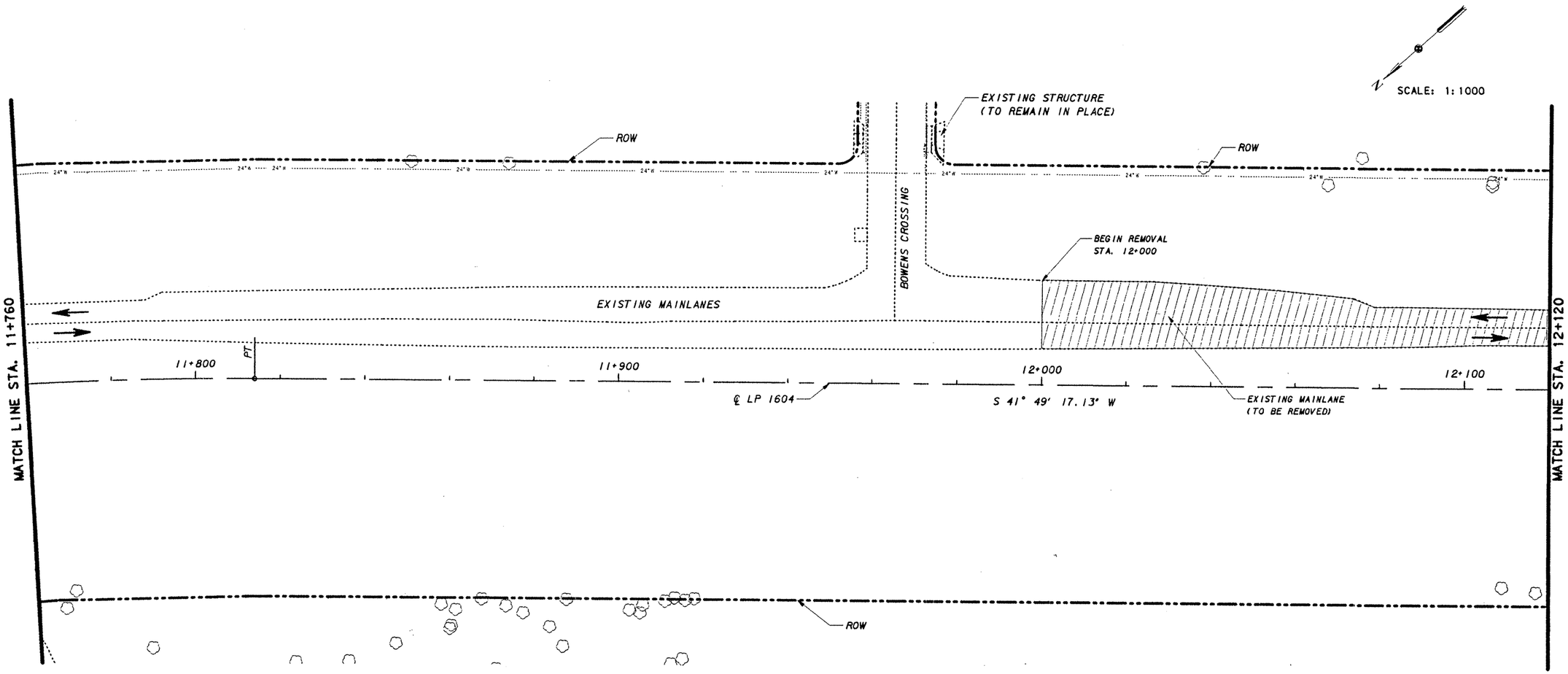

NOTES:

ALL REMOVAL ITEMS SHALL BE CONSIDERED SUBSIDIARY TO ITEM 100 PREP ROW UNLESS OTHERWISE NOTED.

UTILITY LEGEND:

- 16"W — WATER
- Tel — TELEPHONE
- UG Tel — UNDERGROUND TELEPHONE
- 6"G — GAS LINE
- OH 1 PHASE ELEC
- OH 2 PHASE ELEC
- OH 3 PHASE ELEC
- SS — SANITARY SEWER

STATE OF TEXAS
J. KEVIN KENNEDY
72984
REGISTERED
PROFESSIONAL ENGINEER

J. Kevin Kennedy
5-2-97

Texas Department of Transportation
LOOP 1604

EXISTING/REMOVAL PLAN SHEET
STA. 11+760.00 TO STA. 12+120.00

SHEET 7 OF 14

Kimley-Horn and Associates, Inc.

Designed	LMW	DIST	FED REG	FEDERAL AID PROJECT •				HIGHWAY
Checked	BHS	15	6	CD 2452-01-035				LP1604
Drawn	KWA	COUNTY			CONTROL	SECT	JOB	SHEET
Checked	JKK	BEXAR			2452	01	035	32

LEVEL DISPLAYED															
1	2	3	4	5	6	7	8	9	10	11	12	13	14	15	16
17	18	19	20	21	22	23	24	25	26	27	28	29	30	31	32
33	34	35	36	37	38	39	40	41	42	43	44	45	46	47	48
49	50	51	52	53	54	55	56	57	58	59	60	61	62	63	

FILENAME: g:\67316-03\604rrp07.dgn PLOTTED: 28 APR 97 10:20:38

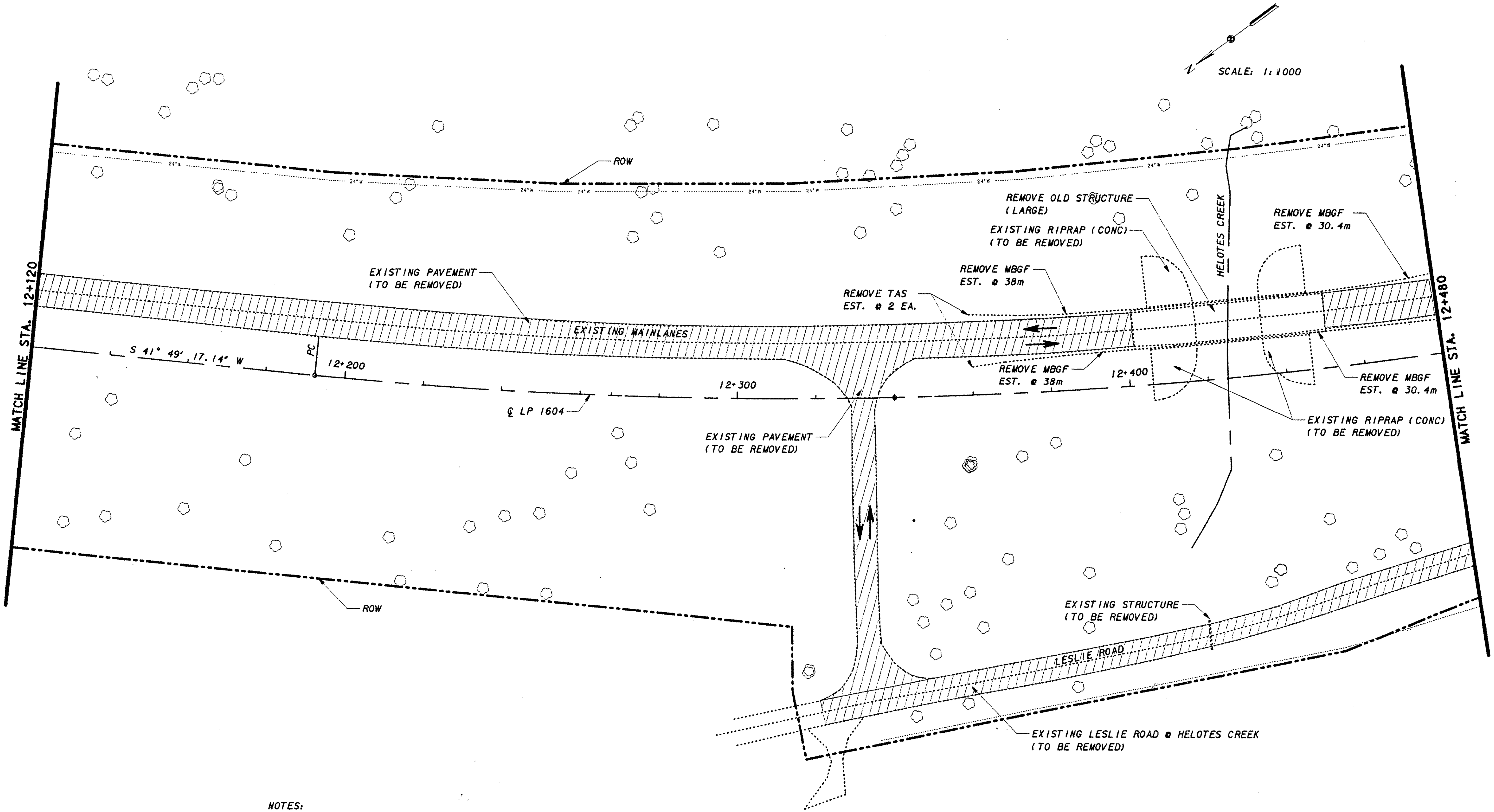

NOTES:

ALL REMOVAL ITEMS SHALL BE CONSIDERED SUBSIDIARY TO ITEM 100 PREP ROW UNLESS OTHERWISE NOTED.

UTILITY LEGEND:

- —— 16"W —— WATER
- —— Tel —— TELEPHONE
- ——UG Tel—— UNDERGROUND TELEPHONE
- —— 6"G —— GAS LINE
- ——×—— OH 1 PHASE ELEC
- ——//—— OH 2 PHASE ELEC
- ——×××—— OH 3 PHASE ELEC
- — — SS — — SANITARY SEWER

ESTIMATED QUANTITIES		
ITEM	UNIT	QTY.
REMOVE OLD STRUCTURE (LARGE)	EA	1
REMOVE METAL BEAM GUARD FENCE	M	136.8
REMOVE TERMINAL ANCHOR SECTION	EA	2

STATE OF TEXAS
J. KEVIN KENNEDY
72984
REGISTERED PROFESSIONAL ENGINEER

J. Kevin Kennedy
5-2-97

Texas Department of Transportation
LOOP 1604

EXISTING/REMOVAL PLAN SHEET
STA. 12+120 TO STA. 12+480

SHEET 8 OF 14

Kimley-Horn and Associates, Inc.

Designed	LMW	DIST	FED REG	FEDERAL AID PROJECT #				HIGHWAY
Checked	BHS	15	6	CD 2452-01-035				LP1604
Drawn	KWA	COUNTY			CONTROL	SECT	JOB	SHEET
Checked	JKK	BEXAR			2452	01	035	33

FILENAME: g:\67316-03\604rrp08.dgn PLOTTED: 28 APR 97 10:20:59

LEVELS DISPLAYED															
1	2	3	4		6	7	8	9	10	11	12	13	14	15	16
17	18	19	20	21	22	23	24	25	26	27	28	29	30	31	32
33	34	35	36	37	38	39	40	41	42	43	44	45	46	47	48
49	50	51	52	53	54	55	56	57	58	59	60	61	62	63	

SCALE: 1:1000

ROW

REMOVE MBGF
EST. @ 7.6m

REMOVE TAS
EST. @ 2 EA.

EXISTING PAVEMENT
(TO BE REMOVED)

EXISTING MAINLANES

MATCH LINE STA. 12+480

MATCH LINE STA. 12+840

12+500

12+600

12+700

12+800

S 22° 58' 07.51" W

℄ LP 1604

REMOVE MBGF
EST. @ 7.6m

EXISTING STRUCTURE
(TO BE REMOVED)

EXISTING CROSSOVER
(TO BE REMOVED)

LESLIE ROAD

ROW

NOTES:

ALL REMOVAL ITEMS SHALL BE CONSIDERED SUBSIDIARY TO ITEM 100 PREP ROW UNLESS OTHERWISE NOTED.

UTILITY LEGEND:

- 16"W — WATER
- Tel — TELEPHONE
- UG Tel — UNDERGROUND TELEPHONE
- 6"G — GAS LINE
- OH 1 PHASE ELEC
- OH 2 PHASE ELEC
- OH 3 PHASE ELEC
- SS — SANITARY SEWER

ESTIMATED QUANTITIES		
ITEM	UNIT	QTY.
REMOVE METAL BEAM GUARD FENCE	M	15.2
REMOVE TERMINAL ANCHOR SECTION	EA	2

STATE OF TEXAS
J. KEVIN KENNEDY
72984
REGISTERED
PROFESSIONAL ENGINEER

J. Kevin Kennedy
5-2-97

Texas Department of Transportation
LOOP 1604

EXISTING/REMOVAL PLAN SHEET
STA. 12+480 TO STA. 12+840

SHEET 9 OF 14

Kimley-Horn and Associates, Inc.

Designed	LMW	DIST	FED REG	FEDERAL AID PROJECT #				HIGHWAY
Checked	BHS	15	6	CD 2452-01-035				LP1604
Drawn	KWA	COUNTY			CONTROL	SECT	JOB	SHEET
Checked	JKK	BEXAR			2452	01	035	34

FILENAME: g:\67316-03\604rrp09.dgn PLOTTED: 28 APR 97 10:21:27

LEVELS DISPLAYED

1	2	3	4	5	6	7	8	9	10	11	12	13	14	15	16
17	18	19	20	21	22	23	24	25	26	27	28	29	30	31	32
33	34	35	36	37	38	39	40	41	42	43	44	45	46	47	48
49	50	51	52	53	54	55	56	57	58	59	60	61	62	63	

SCALE: 1:1000

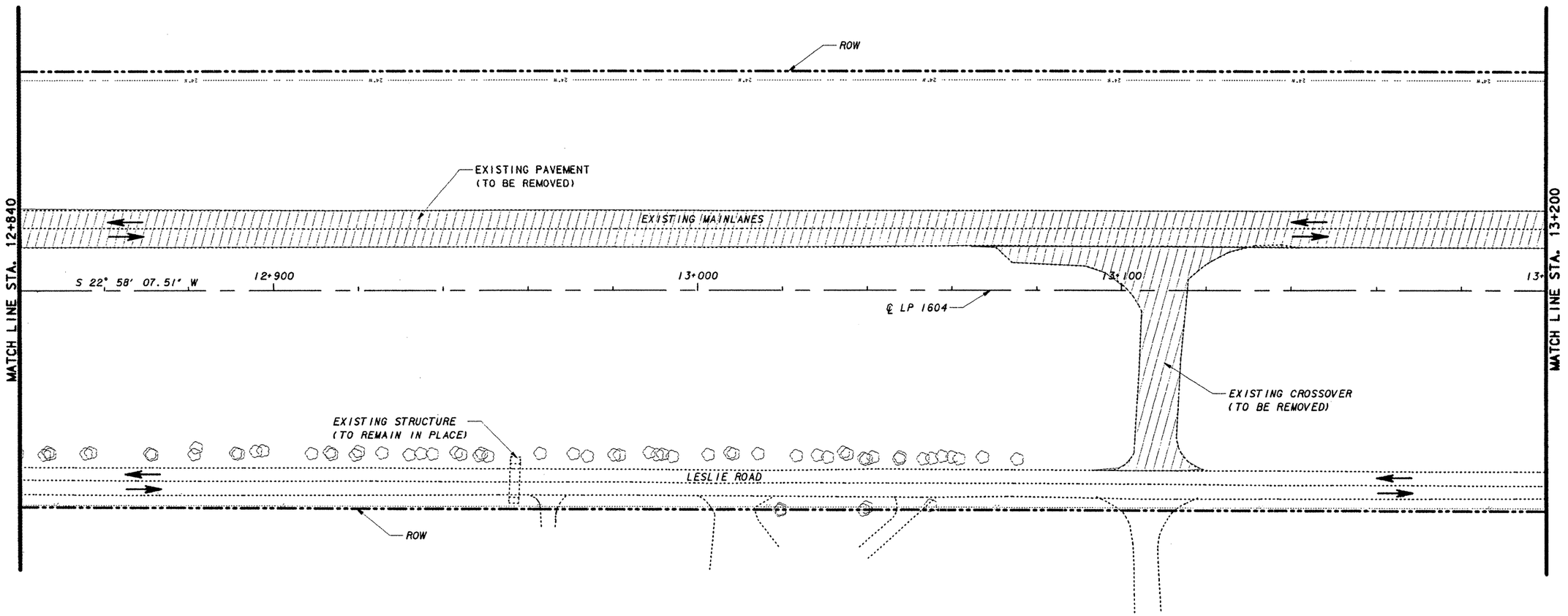

NOTES:

ALL REMOVAL ITEMS SHALL BE CONSIDERED SUBSIDIARY TO ITEM 100 PREP ROW UNLESS OTHERWISE NOTED.

UTILITY LEGEND:

—— 16"W ——	WATER
—— Tel ——	TELEPHONE
—— UG Tel ——	UNDERGROUND TELEPHONE
—— 6"G ——	GAS LINE
——X——	OH 1 PHASE ELEC
——//——	OH 2 PHASE ELEC
——XXX——	OH 3 PHASE ELEC
— — SS — —	SANITARY SEWER

STATE OF TEXAS
J. KEVIN KENNEDY
72584
REGISTERED PROFESSIONAL ENGINEER

J. Kevin Kennedy
5-2-97

Texas Department of Transportation
LOOP 1604

EXISTING/REMOVAL PLAN SHEET
STA. 12+840 TO STA. 13+200

SHEET 10 OF 14

Kimley-Horn and Associates, Inc.

Designed	LMW	DIST	FED REG	FEDERAL AID PROJECT #				HIGHWAY
Checked	BHS	15	6	CD 2452-01-035				LP1604
Drawn	KWA	COUNTY			CONTROL	SECT	JOB	SHEET
Checked	JKK	BEXAR			2452	01	035	35

FILENAME: g:\67316-03\604rrp10.dgn PLOTTED: 28 APR 97 10:22:08

LEVELS DISPLAYED

1	2	3	4	5	6	7	8	9	10	11	12	13	14	15	16
17	18	19	20	21	22	23	24	25	26	27	28	29	30	31	32
33	34	35	36	37	38	39	40	41	42	43	44	45	46	47	48
49	50	51	52	53	54	55	56	57	58	59	60	61	62	63	

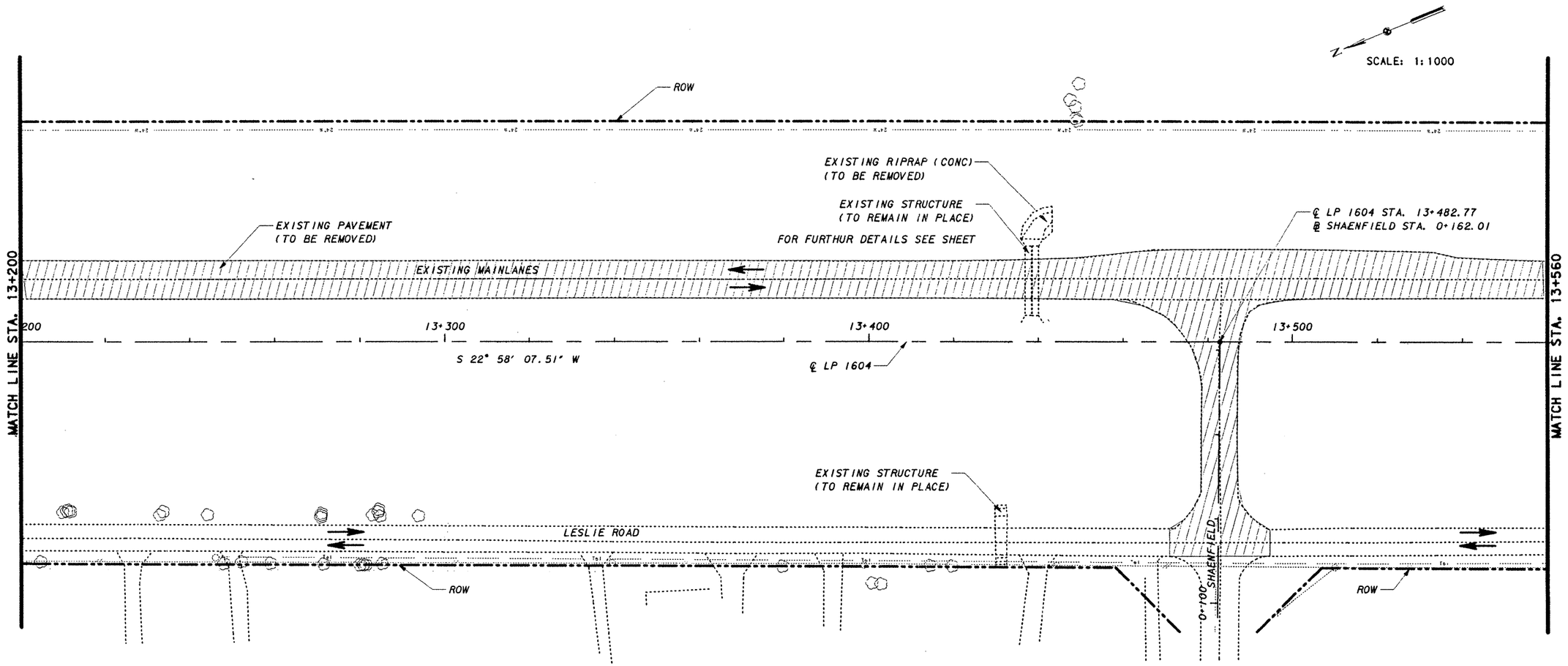

NOTES:

ALL REMOVAL ITEMS SHALL BE CONSIDERED SUBSIDIARY TO ITEM 100 PREP ROW UNLESS OTHERWISE NOTED.

UTILITY LEGEND:

- 16"W — WATER
- Tel — TELEPHONE
- UG Tel — UNDERGROUND TELEPHONE
- 6"G — GAS LINE
- OH 1 PHASE ELEC
- OH 2 PHASE ELEC
- OH 3 PHASE ELEC
- SS — SANITARY SEWER

STATE OF TEXAS
J. KEVIN KENNEDY
72984
REGISTERED PROFESSIONAL ENGINEER

J. Kevin Kennedy
5-2-97

Texas Department of Transportation
LOOP 1604

EXISTING/REMOVAL PLAN SHEET
STA. 13+200 TO STA. 13+560

SHEET 11 OF 14

Kimley-Horn and Associates, Inc.

Designed	LMW	DIST	FED REG	FEDERAL AID PROJECT #				HIGHWAY
Checked	BHS	15	6	CD 2452-01-035				LP1604
Drawn	KWA	COUNTY			CONTROL	SECT	JOB	SHEET
Checked	JKK	BEXAR			2452	01	035	36

LEVELS DISPLAYED

1	2	3	4		6	7	8	9	10	11	12	13	14	15	16
17	18	19	20	21	22	23	24	25	26	27	28	29	30	31	32
33	34	35	36	37	38	39	40	41	42	43	44	45	46	47	48
49	50	51	52	53	54	55	56	57	58	59	60	61	62	63	

FILENAME: gi\67316-03\604rrpll.dgn PLOTTED: 28 APR 97 10:22:29

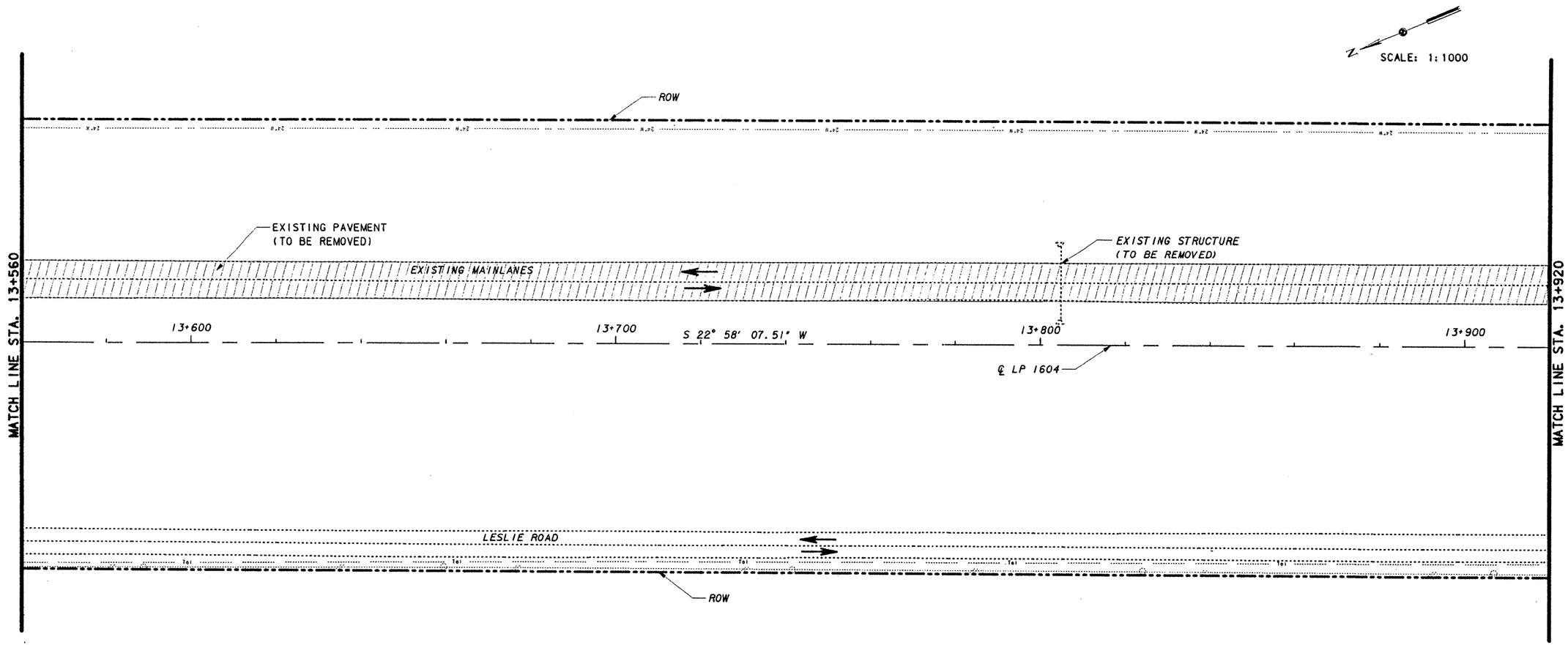

NOTES:

ALL REMOVAL ITEMS SHALL BE CONSIDERED SUBSIDIARY TO ITEM 100 PREP ROW UNLESS OTHERWISE NOTED.

UTILITY LEGEND:

—— 16"W ——	WATER
—— Tel ——	TELEPHONE
—— UG Tel ——	UNDERGROUND TELEPHONE
—— 6"G ——	GAS LINE
——X——	OH 1 PHASE ELEC
——//——	OH 2 PHASE ELEC
——XXX——	OH 3 PHASE ELEC
— — SS — —	SANITARY SEWER

STATE OF TEXAS
J. KEVIN KENNEDY
72984
REGISTERED
PROFESSIONAL ENGINEER

J. Kevin Kennedy
5-2-97

Texas Department of Transportation
LOOP 1604

EXISTING/REMOVAL PLAN SHEET
STA. 13+560 TO STA. 13+920

SHEET 12 OF 14

Kimley-Horn and Associates, Inc.

Designed	LMW	DIST	FED REG	FEDERAL AID PROJECT #				HIGHWAY
Checked	BHS	15	6	CD 2452-01-035				LP1604
Drawn	KWA	COUNTY			CONTROL	SECT	JOB	SHEET
Checked	JKK	BEXAR			2452	01	035	37

LEVELS DISPLAYED															
1	2	3	4	5	6	7	8	9	10	11	12	13	14	15	16
17	18	19	20	21	22	23	24	25	26	27	28	29	30	31	32
33	34	35	36	37	38	39	40	41	42	43	44	45	46	47	48
49	50	51	52	53	54	55	56	57	58	59	60	61	62	63	

FILENAME: gr\67316-03\604rrpl2.dgn PLOTTED: 28 APR 97 10:23:14

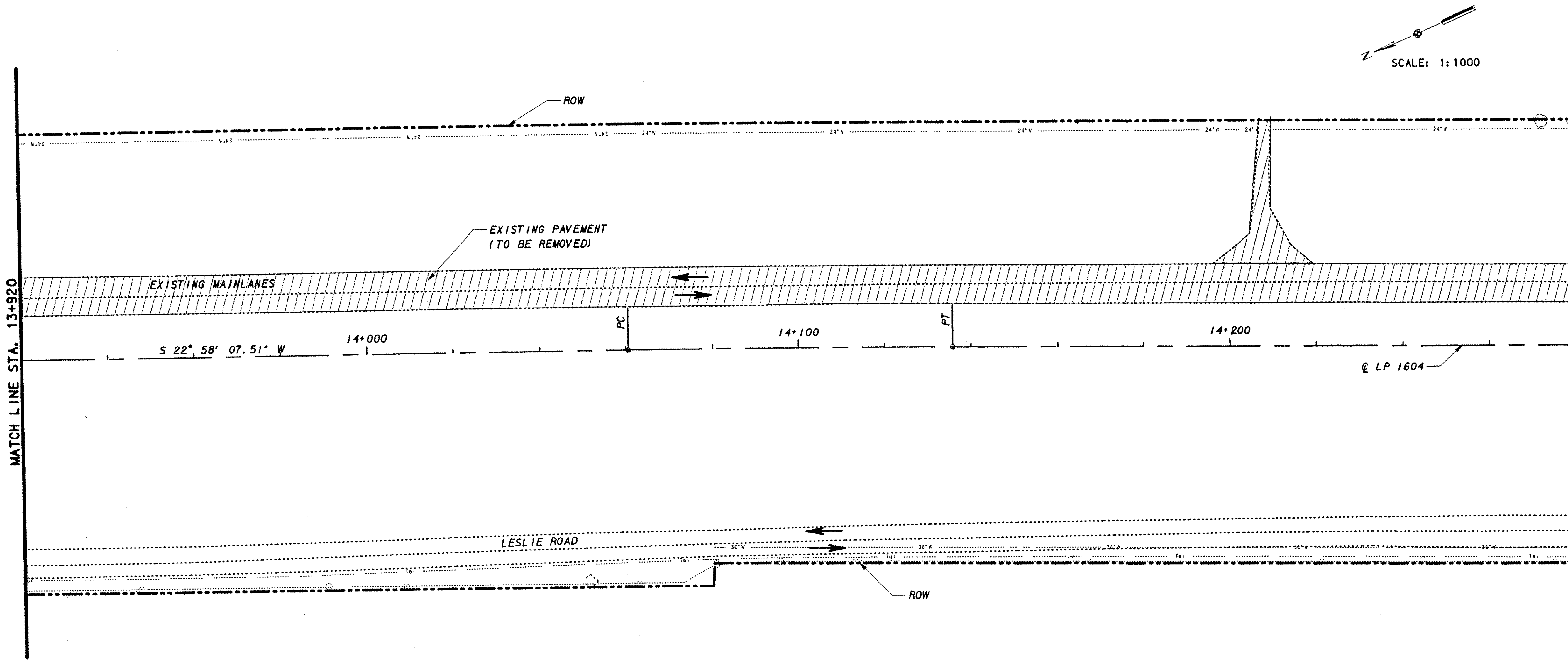

NOTES:

ALL REMOVAL ITEMS SHALL BE CONSIDERED SUBSIDIARY TO ITEM 100 PREP ROW UNLESS OTHERWISE NOTED.

UTILITY LEGEND:

- 16"W — WATER
- Tel — TELEPHONE
- UG Tel — UNDERGROUND TELEPHONE
- 6"G — GAS LINE
- ✕ — OH 1 PHASE ELEC
- // — OH 2 PHASE ELEC
- ✕✕✕ — OH 3 PHASE ELEC
- SS — SANITARY SEWER

FILENAME: g:\67316-03\604rrp13.dgn PLOTTED: 28 APR 97 10:23:55

LEVELS DISPLAYED

1	2	3	4		6	7	8	9	10	11	12	13	14	15	16
17	18	19	20	21	22	23	24	25	26	27	28	29	30	31	32
33	34	35	36	37	38	39	40	41	42	43	44	45	46	47	48
49	50	51	52	53	54	55	56	57	58	59	60	61	62	63	

STATE OF TEXAS
J. KEVIN KENNEDY
72984
REGISTERED PROFESSIONAL ENGINEER

J. Kevin Kennedy 5-2-97

Texas Department of Transportation
LOOP 1604

EXISTING/REMOVAL PLAN SHEET
STA. 13+920 TO STA. 14+280

SHEET 13 OF 14

Kimley-Horn and Associates, Inc.

		DIST	FED REG	FEDERAL AID PROJECT #			HIGHWAY
Designed	LMW	15	6	CD 2452-01-035			LP1604
Checked	BHS	COUNTY		CONTROL	SECT	JOB	SHEET
Drawn	KWA	BEXAR		2452	01	035	38
Checked	JKK						

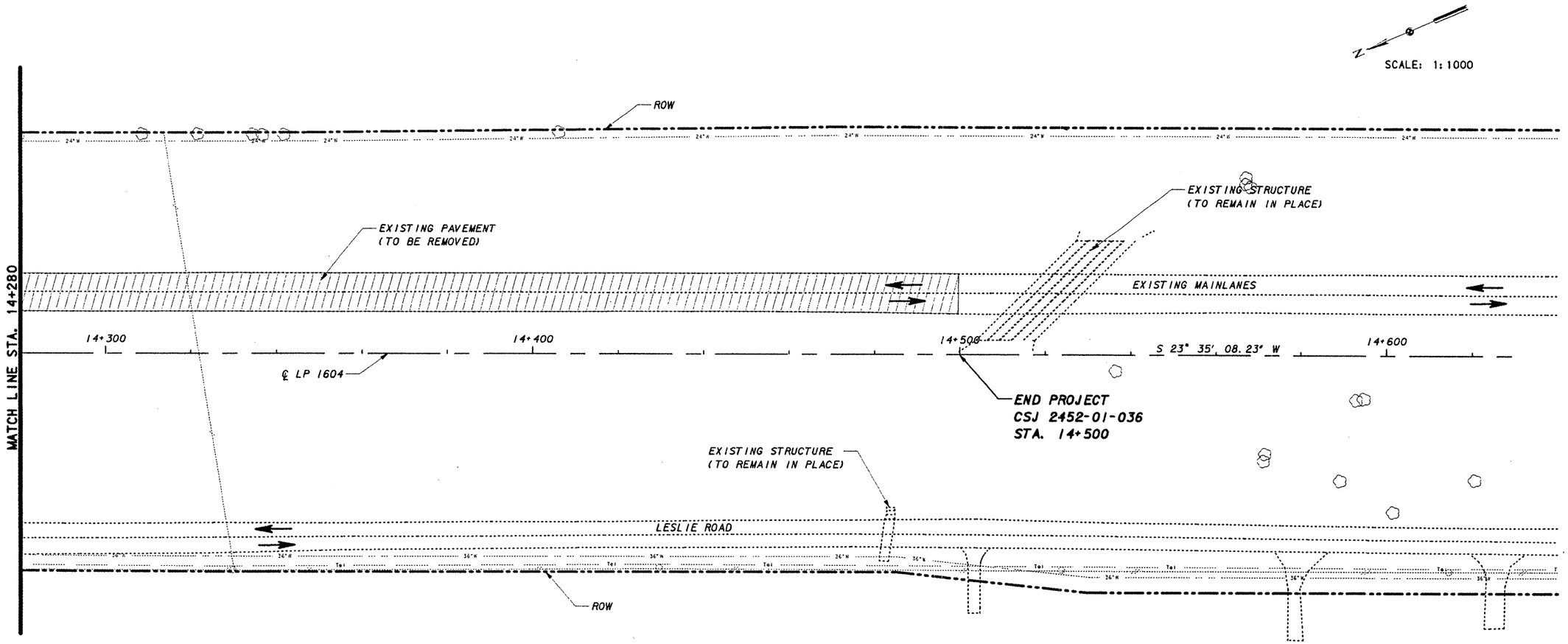

NOTES:

ALL REMOVAL ITEMS SHALL BE CONSIDERED SUBSIDIARY TO ITEM 100 PREP ROW UNLESS OTHERWISE NOTED.

UTILITY LEGEND:

- 16"W — WATER
- Tel — TELEPHONE
- UG Tel — UNDERGROUND TELEPHONE
- 6"G — GAS LINE
- OH 1 PHASE ELEC
- OH 2 PHASE ELEC
- OH 3 PHASE ELEC
- SS — SANITARY SEWER

STATE OF TEXAS
J. KEVIN KENNEDY
72984
REGISTERED PROFESSIONAL ENGINEER
J. Kevin Kennedy
5-2-97

Texas Department of Transportation
LOOP 1604

EXISTING/REMOVAL PLAN SHEET
STA. 14+280 TO END OF PROJECT

SHEET 14 OF 14

Kimley-Horn and Associates, Inc.

Designed	LMW	DIST	FED REG	FEDERAL AID PROJECT #				HIGHWAY
Checked	BHS	15	6	CD 2452-01-035				LP1604
Drawn	KWA	COUNTY			CONTROL	SECT	JOB	SHEET
Checked	JKK	BEXAR			2452	01	035	39

FILENAME: g:\67316-03\604rrp14.dgn PLOTTED: 28 APR 97 10:26:24

LEVELS DISPLAYED

1	2	3	4	5	6	7	8	9	10	11	12	13	14	15	16																
17	18	19	20	21	22	23	24	25	26	27	28	29	30	31	32																
33	34	35	36	37	38	39	40	41	42	43	44	45	46	47	48																
49	50	51	52	53	54	55	56	57	58	59	60	61	62	63																	

MISCELLANEOUS AND REMOVAL ITEM SUMMARY

SHEET NO.	STATION TO STATION	PORT CONC TRF BAR (MOVE & RESET) M	QUADGUARD SYSTEM 10 BAY (760mm) (TY B) EA					REMOVE MBGF M	REMOV TERM ANCH SECT EA	REMOVE OLD STR LARGE EA
104	9+760 to 9+960	38.75	1					-	-	-
105	9+960 to 10+320	534.55	1					-	-	-
106	10+320 to 10+680	-	-					-	-	-
107	10+680 to 11+040	-	-					-	-	-
108	11+040 to 11+400	-	-					-	-	-
109	11+400 to 11+760	-	-					76	4	-
110	11+760 to 12+120	-	-					-	-	-
111	12+120 to 12+480	-	-					136.8	2	1
112	12+480 to 12+840	-	-					15.2	2	-
113	12+840 to 13+200	-	-					-	-	-
114	13+200 to 13+560	-	-					-	-	-
115	13+560 to 13+920	63.7	1					-	-	-
116	13+920 to 14+280	227.5	-					-	-	-
117	14+280 to 14+640	-	-					-	-	-
	PROJECT TOTAL	864.50	3					228	8	1

NO.	DATE	REVISION	APPROV.

Texas Department of Transportation
LOOP 1604

MISCELLANEOUS AND REMOVAL ITEM SUMMARY

Kimley-Horn and Associates, Inc.

Designed BHS	DIST	FED REG	FEDERAL AID PROJECT #				HIGHWAY
Checked DKK	15	6	CD 2452-01-035				LP1604
Drawn DKK	COUNTY			CONTROL	SECT	JOB	SHEET
Checked JKK	BEXAR			2452	01	035	40

LEVELS DISPLAYED

1	2	3	4	5	6	7	8	9	10	11	12	13	14	15	16
17	18	19	20	21	22	23	24	25	26	27	28	29	30	31	32
33	34	35	36	37	38	39	40	41	42	43	44	45	46	47	48
49	50	51	52	53	54	55	56	57	58	59	60	61	62	63	

FILENAME: g:\67316-03\sum5.dgn PLOTTED: 02 MAY 97 14:04:37

			LARGE STRUCTURES		BRIDGE CLASS STRUCTURES		
DESCRIPTION			NORTHBOUND LP1604 & BRIDGE @ HELOTES CREEK	SOUTHBOUND LP1604 & BRIDGE @ HELOTES CREEK	BRIDGE CLASS CULVERT STRUCT No.4	BRIDGE CLASS CULVERT STRUCT No.6	TOTALS
	PERMANENT STRUCTURE NUMBER		15-015-2452-01-150	15-015-2452-01-151	15-015-2452-01-159	15-015-2452-01-158	
	BEGIN BRIDGE STATION		12+397.198	12+397.198	11+535.325	13+429.163	
	END BRIDGE STATION		12+451.198	12+451.198	11+542.675	13+440.413	
	LENGTH (METRIC)		54.000	54.000	7.350	11.250	
	LAYOUT SHEET NUMBER		147	148	199	200	
ITEM-CODE	ITEM	UNIT					
0416-5005	DRILL SHAFT (750mm)	M	180	198			378
0420-5013	CL C CONC (ABUT)	M3	29	29			58
0420-5014	CL C CONC (BENT)	M3	36.2	36			72.2
0422-5001	REINF CONC SLAB	M2	648.13	647.87			1296
0425-5002	PRESTR CONC BEAM (TY B)	M	321.966	321.84			643.806
0427-5006	EPOXY WATERPROOFING	M2	63.6	63.6			127.2
0428-5001	CONC SURF TREAT	M2	648.13	647.87			1296
0432-5001	RIPRAP (CONC) (CL B)	M3	156.9	233.1			390
0450-5045	RAIL (TY SSTR)	M	118.222	118.179			236.40
0454-5003	SEALED EXPANSION JOINTS (100mm)	M	24.19	24.178			48.368
-							
0110-5002	EXCAVATION (CHANNEL)	M3	5276	2829			8105
0432-5001	RIPRAP (CONC) (CL B)	M3			36.5	54	90.5
0462-5007	CONC BOX CULV (1500mm X 900mm)	M			-	282.8	282.8
0462-5008	CONC BOX CULV (1500mm X 1200mm)	M			194	-	194
0465-5036	INLET (COMPL) (DROP) (TY 3A)	M3			1	1	2
0467-5008	SAFETY END TREATMENT (TY 1)						
	(1500mm X 1200mm) (1:3) C	EA			8	-	8
0467-5007	SAFETY END TREATMENT (TY 1)						
	(1500mm X 900mm) (1:3) C	EA			-	12	12
-	* STRUCTURE EXCAVATION CULVERT (LARGE)	M3			668	460	1128
-	* GRATE (TY 2)	EA			1	1	2

* SUPPLIED FOR CONTRACTORS INFORMATION ONLY.

NO.	DATE	REVISION	APPROV.

Texas Department of Transportation
LOOP 1604

LARGE STRUCTURE & BRIDGE CLASS STRUCTURE SUMMARY

Kimley-Horn and Associates, Inc.

Designed	DIST	FED REG	FEDERAL AID PROJECT			HIGHWAY
Checked	15	6				LP1604
Drawn	COUNTY		CONTROL	SECT	JOB	SHEET
Checked	BEXAR		2452	01	035	41

H:\DRAWINGS\6731603\QUANTITY\BRIDGE.DGN

CULVERT SUMMARY

LAYOUT SHEET NO.	STRUCTURE NO.	LOCATION	CHANNEL EXCAVATION M3	STRUCTURE EXCAVATION CULVERT (SMALL) * M3	STRUCTURE EXCAVATION CULVERT (LARGE) * M3	RIPRAP (CONC.) (CLB) M3	CONCRETE BOX CULVERT 2100mm x 1200mm M	CONCRETE BOX CULVERT 1800mm x 1500mm M	CONCRETE BOX CULVERT 1800mm x 1200mm M	RC PIPE (CL III) (600mm) DIA M	RC PIPE (CL III) (750mm) DIA M	RC PIPE (CL III) (900mm) DIA M	INLET (COMPL) DROP TYPE 3 EA.	GRATE TYPE 2 * EA.
196	1 & 1C	STA. 10+341.5			306	94.5	105							
197	2	STA. 10+900	315	77		29		24.5						
198	3 & 3A	STA. 11+347			621	38			98					
201	7 & 7A	STA. 13+804.5		198		2.5				33.5		65.5	1	1
203	5C	STA. 12+337 (60 Rt.)	50	69							37			
203	5D	STA. 12+324 (89 Rt.)	33	24						16.5				
PROJECT TOTAL			398	368	927	164	105	24.5	98	50	37	65.5	1	1

LAYOUT SHEET NO.	STRUCTURE NO.	LOCATION	SAFETY END TREATMENT (TY I) 2100mm x 1200mm (1:3)C EA.	SAFETY END TREATMENT (TY I) 1800mm x 1500mm (1:3)C EA.	SAFETY END TREATMENT (TY I) 1800mm x 1200mm (1:3)C EA.	SAFETY END TREATMENT (TY II) (600mm) (RCP) (1:6) EA.	SAFETY END TREATMENT (TY II) (750mm) (RCP) (1:3) EA.	SAFETY END TREATMENT (TY II) (900mm) (RCP) (1:6) EA.	WING WALL (PW-15-1.2) (H=1200mm) EA.	WING WALL (PW-15-1.5) (H=1500mm) EA.	INLET (COMPL) (ARMOR CURB SLOT)
196	1 & 1C	STA. 10+341.5	4						2		2
197	2	STA. 10+900		1						1	
198	3 & 3A	STA. 11+347			8						
201	7 & 7A	STA. 13+804.5				1		2			
203	5C	STA. 12+340 (62 Rt.)					2				
203	5D	STA. 12+324 (89 Rt.)				2					
PROJECT TOTAL			4	1	8	3	2	2	2	1	2

* SUPPLIED FOR CONTRACTORS INFORMATION ONLY.

STATE OF TEXAS
CARL BAIN
56996
REGISTERED
PROFESSIONAL ENGINEER

The seal appearing on this document was authorized by Carl Bain P.E. 56996, on MAY 2 1997

NO.	DATE	REVISION	APPROV.

Texas Department of Transportation
LOOP 1604

CULVERT SUMMARY

BAIN MEDINA BAIN, INC.
ENGINEERS & SURVEYORS
San Antonio, Texas

Designed	DIST	FED REG	FEDERAL AID PROJECT			HIGHWAY
Checked	15	6				LP1604
Drawn	COUNTY		CONTROL	SECT	JOB	SHEET
Checked	BEXAR		2452	01	035	42

CULVERT.DWG PLOTTING SCALE: 1000=1000
DATE: 04-28-97

STORM SEWER SUMMARY

SECTION SHEET NO.	LINE NO.	FROM	TO	CHANNEL EXCAVATION	RIPRAP (CONC) (CLB)	RC PIPE (CL III)			CONCRETE BOX CULVERT		INLET (COMPL) DROP			INLET (COMPL) CURB		SET (TY I)	
						(600 mm)	(750 mm)	(900 mm)	1200mm x 1200mm	1500mm x 1200mm	(TY W-1)	(TY 6)	(TY 3)	(TY I)	(TY III)	1200mm x 1200mm (1:3) C	1500mm x 1200mm (1:3) C
				M3	M3	M	M	M	M	M	EA	EA	EA	EA	EA	EA	EA
203	1A	INLET	OUTLET		2			97				1					
203	1B	INLET	OUTLET	765	2			36				1					
204	2A	INLET	OUTLET	530	2		20					1					
204	2B	INLET	OUTLET	1008	3				37		1					1	
205	2C	INLET	OUTLET	450	2	40.5							1				
205	2D	INLET	OUTLET	444	2.5					68.5	2						1
206	2E	INLET	STR 2D			28.5								1			
206	2E-1	INLET	STR 2D			19.7									1		
206	2F	INLET	STR 2D			4.3									1		
206	2G	INLET	STR 2D			4.3									1		
206	2H	INLET	STR 2D			23.5									1		
PROJECT TOTAL				3197	13.5	120.8	20	133	37	68.5	3	3	1	1	4	1	1

SECTION SHEET NO.	LINE NO.	FROM	TO	SET (TY II)			GRATE		SEWER EXCAVATION *	RING & COVER (650mm) *	CURB RAMP HAND RAIL	STRUCTURAL EXCAVATION CULVERT (SMALL) *
				(600 mm) (RCP) (1:3)	(750 mm) (RCP) (1:3)	(900 mm) (RCP) (1:3)	TY 4 *	TY 2 *				
				EA	EA	EA	EA	EA	M3	EA	M	M3
203	1A	INLET	OUTLET			1		4	211			
203	1B	INLET	OUTLET			1		4	187			
204	2A	INLET	OUTLET		1			4	42			
204	2B	INLET	OUTLET				1				25	119
205	2C	INLET	OUTLET	1				1	174			
205	2D	INLET	OUTLET				2					527
206	2E	INLET	STR 2D						55	1		
206	2E-1	INLET	STR 2D						30	1		
206	2F	INLET	STR 2D						10	1		
206	2G	INLET	STR 2D						10	1		
206	2H	INLET	STR 2D						56	1		
PROJECT TOTAL				1	1	2	3	13	775	5	25	646

*SUPPLIED FOR CONTRACTORS INFORMATION ONLY.

STATE OF TEXAS
CARL BAIN
56996
REGISTERED
PROFESSIONAL ENGINEER

The seal appearing on this document was authorized by Carl Bain P.E. 56996, on MAY 2, 1997

NO.	DATE	REVISION	APPROV.

Texas Department of Transportation
LOOP 1604

STORM SEWER SUMMARY

BAIN MEDINA BAIN, INC.
ENGINEERS & SURVEYORS
San Antonio, Texas

Designed	DIST	FED REG	FEDERAL AID PROJECT			HIGHWAY
Checked	15	6				LP1604
Drawn	COUNTY		CONTROL	SECT	JOB	SHEET
Checked	BEXAR		2452	01	035	43

STMSWR.DWG PLOTTING SCALE: 1000=1000
DATE: 04-28-97

SW3P SUMMARY

SHEET NO.	STATION TO STATION	SOIL RET BLNKTS		ROCK FILTER DAMS						TEMP SEDMT CONT FENCE**			BKHOE WORK (EROSN CONT) (CL 1) **	BLADING WORK (EROSN CONT) (CL 1) **	EXCAV WORK (EROSN CONT) (CL 1) **	CONSTRUCT EXIT**		
		(CI 1)(TY A) M2	(CI 2)(TY E) M2	(TY 2) M	(TY 2) (REMV & REPL) M	(TY 2) (REMV) M	(TY 4) M	(TY 4) (REMV & REPL) M	(TY 4) (REMV) M	TEMP SEDMT FENCE M	(REMOV & REPLAC) M	(REMOV) M	HR	HR	HR	(TY 1) M2	(TY 1) (REMV & REPL) M2	(TY 1) (REMV) M2
					EST	EST	EST	EST	EST	EST	EST	EST	EST	EST	EST	EST	EST	EST
208	STA. 9+760 TO STA. 11+040	2250		15	15	15	35	35	35									
209	STA. 11+040 TO STA. 12+480	2000	5800	19	19	19	70	70	70									
210	STA. 12+480 TO STA. 13+920		5000				20	20	20									
211	STA. 13+920 TO STA. 14+500						10	10	10									
PROJECT TOTALS		4250	10,800	34	34	34	135	135	135	2000	2000	2000	40	40	40	510	510	510

SHEET NO.	STATION TO STATION	CONSTRUCT EXIT**			SEDMT TRAP DROP INLET *	SEDMT TRAP *	SEDMT TRAP CURB INLET *
		(TY 3) M2	(TY 3) (REMV & REPL) M2	(TY 3) M2	EA	EA	EA
		EST	EST	EST	EST	EST	EST
208	STA. 9+760 TO STA. 11+040				6	3	7
209	STA. 11+040 TO STA. 12+480				1	5	
210	STA. 12+480 TO STA. 13+920				2	2	
211	STA. 13+920 TO STA. 14+500						
PROJECT TOTALS		510	510	510	9	10	7

*SUPPLIED FOR CONTRACTORS INFORMATION ONLY.

**ITEM SHALL BE USED OR PLACED AS DIRECTED BY THE ENGINEER.

STATE OF TEXAS
CARL BAIN
56996
REGISTERED
PROFESSIONAL ENGINEER

The seal appearing on this document was authorized by Carl Bain P.E. 56996, on MAY 2, 1997

NO.	DATE	REVISION	APPROV

Texas Department of Transportation
LOOP 1604

SW3P SUMMARY

BAIN MEDINA BAIN, INC.
ENGINEERS & SURVEYORS
San Antonio, Texas

Designed	DIST	FED REG	FEDERAL AID PROJECT			HIGHWAY
Checked	15	6				LP1604
Drawn	COUNTY		CONTROL	SECT	JOB	SHEET
Checked	BEXAR		2452	01	035	44

SW3P-SUM.DWG PLOTTING SCALE: 1000=1000
DATE: 04-28-97

ELECTRICAL SERVICE SUMMARY DATA

SERVICE POLE NO.	SHEET NO.	ELECTRIC SERVICE DESCRIPTION (SEE ED(3)-93A (M)	ELECTRIC SERVICE CONDUIT SIZE	SERVICE CONDUCTORS NO./SIZE	SAFETY SWITCH AMPS	MAIN DISCONNECT SWITCH AMP/FUSE	MAIN DISCONNECT CKT. BKR. POLE/AMP	TWO-POLE CONTACTOR AMPS	PANEL BD./ LOADCENTER AMP RATING (MIN)	CIRCUIT NO. RELAY	BRANCH CKT. BKR POLE/AMPS	PURPOSE	KVA LOAD
1	248	TYS(240/480)60(NS)GS(T)TP(0)	38mm	3#6	NA	NA	2P60	60	NA	100	2P30	ILLUMINATION	5.90
											2P30	UNUSED	
2	250	TYS(240/480)40(NS)GS(T)TP(0)	38mm	3#6	NA	NA	2P40	40	NA	200	2P20	ILLUMINATION	1.08
											2P20	UNUSED	
3	252	TYS(240/480)40(NS)GS(T)TP(0)	38mm	3#6	NA	NA	2P40	40	NA	300	2P20	ILLUMINATION	4.03
											2P20	UNUSED	
4	255	TYS(240/480)40(NS)GS(T)TP(0)	38mm	3#6	NA	NA	2P40	40	NA	400	2P20	ILLUMINATION	0.72
											2P20	UNUSED	
5	312	TYD(120/240)070(NS)GS(T)EX(0)	38mm	3#4	NA	NA	2P70	NA	70A	1	1P70	NEW GILBEAU SIGNAL	5.00
6	308	TYD(120/240)070(NS)GS(T)EX(0)	38mm	3#4	NA	NA	2P70	NA	70A	2	1P70	BRAUN RD SIGNAL	5.00

NOTE: ELECTRICAL SERVICE SUMMARY INCLUDES SERVICE TO ILLUMINATION AND TRAFFIC SIGNALS.

ELECTRICAL LAYOUT SUMMARY DATA

ITEM	DESC CODE	DESCRIPTION	UNIT	SHEET NUMBER 245	246	247	248	249	250	251	252	253	254	255	PROJECT TOTALS EST. QTY.	PROJECT TOTALS FINAL QTY.
610	5001	RDWY ILLUM ASSEM (TYSA15T3)(.4 KW)S	EA				4				3	2			9	
610	5002	RDWY ILLUM ASSEM (TYSA15T3-3)(.4 KW)S	EA								1				1	
610	5003	RDWY ILLUM ASSEM (TYSA12T3)(.25 KW)S	EA			2		2	2	1			1	1	9	
610	5004	RDWY ILLUM ASSEM (TYSA12T3-3)(.25 KW)S	EA		3										3	
611	5001	REMOVE RDWY ILLUM ASSEM	EA	3	4										7	
618	5009	CONDUIT (PVC)(SCH 40)(32MM)	M		381	670	861	48	265	209	299	114	245	219	3,311	
618	5026	CONDUIT (RM)(PUSH BORE)(50MM)	M		13		25		20	15	21			16	110	
620	5004	CONDUCTOR (NO. 6) (BARE)	M		394	670	886	48	285	224	320	114	245	235	3,421	
620	5010	CONDUCTOR (NO. 6) (INSULATED)	M		788	1340	1772	96	570	448	640	228	490	470	6,842	
624	5001	GROUND BOX TYA(122311) WITH APRON	EA		3	6	7		3	2	2		2	3	28	
628	5056	ELECT SERV TYS(240/480)60(NS)GS(T)TP(0)	EA				1								1	
628	5099	ELECT SERV TYS(240/480)40(NS)GS(T)TP(0)	EA						1		1			1	3	

NOTE: THE REMOVAL OF ROADWAY ILLUMINATION ASSEMBLY (611-5001) SHALL INCLUDE THE REMOVAL OF WIRING BACK TO THE ELECTRICAL SERVICE ENCLOSURE.

STATE OF TEXAS
BRENT L. CHRISTIAN
73921
REGISTERED PROFESSIONAL ENGINEER
6/16/97

NO.	DATE	REVISION	APPROV.

Texas Department of Transportation
LOOP 1604

ELECTRICAL/SERVICE
POLE DATA SHEET

Kimley-Horn and Associates, Inc.

Designed	REK	DIST	FED REG	FEDERAL AID PROJECT				HIGHWAY
Checked	BLC	15	6					LP1604
Drawn	PKG	COUNTY		CONTROL	SECT	JOB		SHEET
Checked	BLC	BEXAR		2452	01	035		45

LEVELS DISPLAYED
1 2 3 4 5 6 7 8 9 10 11 12 13 14 15 16
17 18 19 20 21 22 23 24 25 26 27 28 29 30 31 32
33 34 35 36 37 38 39 40 41 42 43 44 45 46 47 48
49 50 51 52 53 54 55 56 57 58 59 60 61 62 63

H:\DRAWINGS\673160 3\PWLELECT.DGN

STATION	OFFSET	SIGN DESCRIPTION	INSTRUCTIONS
9+723	RT	45 M.P.H.	REMOVE
109+733 *	LT	ONE WAY	REMAIN
109+735 *	LT	STOP	REMAIN
109+739 *	RT	DO NOT ENTER	REMOVE
9+748	RT	ONE WAY	REMOVE
109+754 *	RT	DO NOT ENTER	REMOVE
109+758 *	LT	DO NOT ENTER	REMAIN
109+758 *	RT	DO NOT ENTER	REMAIN
9+762	RT	DO NOT PASS	REMOVE
9+801	LT	PASS WITH CARE	REMOVE
9+816	RT		REMOVE
9+828	RT		REMOVE
9+865	RT		REMOVE
9+878	LT	PRIORITY ZONE	REMOVE
9+890	RT		REMOVE
9+899	RT		REMOVE
9+956	LT		REMOVE

STATION	OFFSET	SIGN DESCRIPTION	INSTRUCTIONS
9+957	RT	WRONG WAY	REMOVE
9+987	LT	DO NOT ENTER	REMOVE
10+077	LT		REMOVE
10+086	RT	ONE WAY	REMAIN
10+138	LT		REMOVE
0+220 *	RT		REMOVE
10+168	LT	TEXAS 16 San Antonio Bandera EXIT ½ MILE	REMOVE
0+240 *	RT	STOP	REMOVE
0+251 *	RT	ONE WAY	REMOVE
10+212	LT		REMOVE
0+280 *	RT	ONE WAY	REMOVE
210+242 *	RT		REMOVE
10+246	LT	DO NOT ENTER / STOP	REMOVE
10+248	RT	WRONG WAY	REMOVE
10+257	LT	⇦JCT SH 16 1 / JCT FM 471 4⇨	REMOVE
10+259	LT	NORTH LOOP 1604 / SOUTH LOOP 1604	REMOVE
210+257 *	LT		REMOVE

STATION	OFFSET	SIGN DESCRIPTION	INSTRUCTIONS
0+326 *	℄		REMOVE
10+267	℄	DO NOT ENTER / STOP	REMOVE
10+267	RT	WRONG WAY	REMOVE
210+270 *	℄		REMOVE
10+287	LT		REMOVE
10+336	LT		REMOVE
10+349	LT		REMOVE
10+414	LT	SOUTH LOOP 1604	REMOVE
10+458	LT		REMOVE
10+470	LT	JCT FM 471 1 / SEA WORLD 6	REMOVE
10+530	LT		REMOVE
10+543	LT	DO NOT PASS	REMOVE
10+685	LT		REMOVE
10+747	LT	SPEED LIMIT 55	REMOVE
10+803	LT	DO NOT ENTER / YIELD	REMOVE
10+815	RT	WEIGHT LIMIT GROSS 44000 LBS	REMOVE
10+839	℄	DO NOT ENTER / YIELD	REMOVE

NOTES:

1. ALL STATIONING EXCEPT THOSE MARKED * IS ALONG THE ℄ OF LOOP 1604 AND IS APPROXIMATE. * STATIONING IS ALONG THE ℄ OF THE ROADWAY TO WHICH IT APPLIES. LISTED ARE EXISTING SIGNS THAT ARE TO BE REMOVED, RELOCATED OR TO REMAIN IN PLACE. SIGN REMOVAL AND RELOCATION ARE PAID FOR UNDER ITEM 649.
2. EXISTING BARRICADES BETWEEN STA. 9+800 AND 10+300 WILL BE REMOVED BY TXDOT MAINTENANCE DEPARTMENT.

EXISTING SIGNS TO BE REMOVED	46 EA
EXISTING SIGNS TO BE RELOCATED	0 EA
TEMPORARY SIGN SUPPORTS (100mm X 100mm) EST. 3.0 M/EA	0 M

NO.	DATE	REVISION	APPROV.

Texas Department of Transportation
LOOP 1604

EXISTING SIGN SUMMARY

1 OF 2

Kimley-Horn and Associates, Inc.

Designed	REK	DIST	FED REG	FEDERAL AID PROJECT				HIGHWAY
Checked	BLC	15	6					LP1604
Drawn	PKG	COUNTY		CONTROL	SECT	JOB		SHEET
Checked	BLC	BEXAR		2452	01	035		46

LEVELS DISPLAYED

1	2	3	4	5	6	7	8	9	10	11	12	13	14	15	16																
17	18	19	20	21	22	23	24	25	26	27	28	29	30	31	32																
33	34	35	36	37	38	39	40	41	42	43	44	45	46	47	48																
49	50	51	52	53	54	55	56	57	58	59	60	61	62	63																	

H:\DRAWINGS\673160 3\RPG\SUM01.DGN

STATION	OFFSET	SIGN DESCRIPTION	INSTRUCTIONS
10+914	LT	SPEED LIMIT 55	REMOVE
11+069	LT		REMOVE
11+166	LT		REMOVE
11+356	LT		REMOVE
11+573	LT	STOP	REMOVE
11+773	LT		REMOVE
11+773	LT		REMOVE
11+954	LT	BOWENS CROSSING LOOP 1604	RELOCATE
12+162	LT	WATCH FOR ICE ON BRIDGE	REMOVE
12+114	LT		REMOVE
12+328	RT	STOP	REMOVE
12+360	RT	LOW WATER CROSSING	REMOVE
12+375	RT	FLOOD GAUGE & GAUGE	REMOVE
12+403	LT	HELOTES CREEK	REMOVE
12+445	LT	HELOTES CREEK	REMOVE
12+482	RT	FLOOD GAUGE & GAUGE	REMOVE
12+530	RT	LOW WATER CROSSING	REMOVE

STATION	OFFSET	SIGN DESCRIPTION	INSTRUCTIONS
12+547	RT	STOP	REMOVE
12+581	℄	STOP	REMOVE
12+627	LT	WATCH FOR ICE ON BRIDGE	REMOVE
13+120	LT	STOP	REMOVE
13+202	LT		REMOVE
13+493	LT	STOP	REMOVE
13+793	LT		REMOVE
14+708	LT	STOP	REMOVE
14+787	LT		REMOVE

NOTES:

1. ALL STATIONING EXCEPT THOSE MARKED * IS ALONG THE ℄ OF LOOP 1604 AND IS APPROXIMATE. * STATIONING IS ALONG THE ℄ OF THE ROADWAY TO WHICH IT APPLIES. LISTED ARE EXISTING SIGNS THAT ARE TO BE REMOVED, RELOCATED OR TO REMAIN IN PLACE. SIGN REMOVAL AND RELOCATION ARE PAID FOR UNDER ITEM 649.

EXISTING SIGNS TO BE REMOVED	25 EA
EXISTING SIGNS TO BE RELOCATED	1 EA
TEMPORARY SIGN SUPPORTS (100mm X 100mm) EST. 3.0 M/EA	0 M

NO.	DATE	REVISION	APPROV.

Texas Department of Transportation
LOOP 1604

EXISTING
SIGN SUMMARY

2 OF 2

Kimley-Horn and Associates, Inc.

Designed	REK	DIST	FED REG	FEDERAL AID PROJECT				HIGHWAY
Checked	BLC	15	6					LP1604
Drawn	PKG	COUNTY			CONTROL	SECT	JOB	SHEET
Checked	BLC	BEXAR			2452	01	035	47

LEVELS DISPLAYED

1	2	3	4	5	6	7	8	9	10	11	12	13	14	15	16	
17	18	19	20	21	22	23	24	25	26	27	28	29	30	31	32	
33	34	35	36	37	38	39	40	41	42	43	44	45	46	47	48	
49	50	51	52	53	54	55	56	57	58	59	60	61	62	63		

H:\DRAWINGS\673160 3\RPG\SUM02.DGN

LEVELS DISPLAYED															
1	2	3	4	5	6	7	8	9	10	11	12	13	14	15	16
17	18	19	20	21	22	23	24	25	26	27	28	29	30	31	32
33	34	35	36	37	38	39	40	41	42	43	44	45	46	47	48
49				53	54	55	56	57	58	59	60	61	62	63	

H:\DRAWINGS\6731603\QUANTITIES\SMALL_SIGN_SUMMARY_BORDER.DGN

SUMMARY OF SMALL SIGNS

PLAN SHEET NO.	SIGN NO.	SIGN TYPE	SIGN TEXT	SIGN DIMENSIONS (mm x mm)	REFLECTIVE SHEETING	PLYWOOD TYPE A	ALUMINUM TYPE A	TYPE OF MOUNT: A	A-1	B	C	D-1	D-2	D-3	D-4	D-5	D-6	F	MP	MW	STAND	4 POST
331	1	R6-1R	ONE WAY	914 X 305	A	X		X														
	2	SR5-1A	WRONG WAY	1067 X 762	C	X												X				
	3	SR5-1A	WRONG WAY	1067 X 762	C	X												X				
	4	FR2-1	SPEED LIMIT 45	914 X 1219	C	X												X				
	5	SW2-2R	SIDE ROAD RIGHT	1219 X 1219	C	X												X				
		PLAQUE	"ADDERSLY DRIVE"	914 X 610	C	X																
	6	FW9-1L	LEFT LANE ENDS	1219 X 1219	C	X												X				
	7	FW9-1L	LEFT LANE ENDS	1219 X 1219	C	X												X				
332	1	R6-1R	ONE WAY	914 X 305	A	X		X														
	2		(SEE LARGE SIGN SUMMARY)																			
	3	R6-1R	ONE WAY	914 X 305	A	X		X														
	4	R6-1R	ONE WAY	914 X 305	A	X		X														
	5	R6-1R	ONE WAY	914 X 305	A	X		X														
	6	R6-1R	ONE WAY	914 X 305	A	X		X														
	7	M3-1	NORTH	610 X 305	C		X		X													
		M1-6L	LOOP 1604	914 X 914	C		X															
		M6-2L		533 X 381	C		X															
	8	FW4-2L	LANE REDUCTION AHEAD	1219 X 1219	C	X												X				
	9	FW4-2L	LANE REDUCTION AHEAD	1219 X 1219	C	X												X				
	10	R6-1R	ONE WAY	914 X 305	A	X		X														
	11		(SEE LARGE SIGN SUMMARY)																			
	12		(SEE LARGE SIGN SUMMARY)																			
	13	R6-1R	ONE WAY	914 X 305	A	X		X														
	14	FW4-1R	MERGE	1219 X 1219	C	X												X				
	15	R6-1R	ONE WAY	914 X 305	A	X		X														
	16	SW3-2A	YIELD AHEAD	1219 X 1219	C	X												X				
333	1	D1	FRONTAGE RD	VAR X 305	C	X						X										
	2	R6-1R	ONE WAY	914 X 305	A	X		X														
	3		(SEE LARGE SIGN SUMMARY)																			
	4		(SEE LARGE SIGN SUMMARY)																			
	5	FR1-2	YIELD	1524 X 1524 X 1524	C	X												X				
	6	D2-2	JCT FM 471 1	VAR X 610	C	X							X									
			SEA WORLD 6																			
					PAGE TOTALS			10	1			1	1					11				

ALUMINUM SIGN BLANKS (TYPE A)

SQUARE METERS	MIN. THICKNESS
LESS THAN 0.7	2.0 mm
0.7 TO 1.4	2.5 mm
GREATER THAN 1.4	3.0 mm

SIGN SUPPORTS SHALL BE LOCATED AS SHOWN ON THE PLANS, EXCEPT THAT THE ENGINEER MAY SHIFT THE SIGN SUPPORTS, WITHIN DESIGN GUIDELINES, WHERE NECESSARY TO SECURE A MORE DESIRABLE LOCATION OR TO AVOID CONFLICT WITH UTILITIES, UNLESS OTHERWISE SHOWN ON THE PLANS. THE CONTRACTOR SHALL STAKE AND THE ENGINEER WILL VERIFY ALL SIGN SUPPORT LOCATIONS.

REFLECTIVE SHEETING WILL BE DESIGNATED AS:

TYPE A - ENGINEER GRADE
TYPE B - SUPER ENGINEER GRADE
TYPE C - HIGH SPECIFIC INTENSITY

SUMMARY OF SMALL SIGNS
SHEET 1 OF 8

ORIGINAL DRAWING DATE:
REVISIONS
DWN: PKG
CKD: JJ
DGN: PKG
CKD: JJ
FEDERAL AID PROJECT
DISTRICT: BEXAR
COUNTY: BEXAR
CONTROL: 24-52
SECTION: 01
JOB: 0355
HIGHWAY: FM 1604
SHEET: 48

LEVELS DISPLAYED																
1	2	3	4	5	6	7	8	9	10	11	12	13	14	15	16	
17	18	19	20	21	22	23	24	25	26	27	28	29	30	31	32	
33	34	35	36	37	38	39	40	41	42	43	44	45	46	47	48	
49				635	45	55	56	57	58	59	60	61	62	63		

H:\DRAWINGS\6731603\QUANTITIES\SMALL_SIGN_SUMMARY_BORDER.DGN

SUMMARY OF SMALL SIGNS

PLAN SHEET NO.	SIGN NO.	SIGN TYPE	SIGN TEXT	SIGN DIMENSIONS (mm x mm)	REFLECTIVE SHEETING	PLYWOOD TYPE A	ALUMINUM TYPE A	TYPE OF MOUNT: A	A-1	B	C	D-1	D-2	D-3	D-4	D-5	D-6	F	MP	MW	STAND	4 POST
333	7	R6-1R	ONE WAY	914 X 305	A	X		X														
	8	SW3-3	SIGNAL AHEAD	1219 X 1219	C	X												X				
	9	SW3-3	SIGNAL AHEAD	1219 X 1219	C	X												X				
	10	R3-8L	LEFT ONLY / THROUGH (VAR)	914 X 914	C	X		X														
	11	D1	BRAUN RD	VAR X 305	C	X						X										
	12	R3-8R	THROUGH / RIGHT ONLY (VAR)	914 X 914	C	X		X														
334	1	R6-1R	ONE WAY	914 X 305	A	X		X														
	2	R6-1R	ONE WAY	914 X 305	A	X		X														
	3	R6-1R	ONE WAY	914 X 305	A	X		X														
	4	FR1-2	YIELD	1524 X 1524 X 1524	C	X		(MOUNTED BACK TO BACK)										X				
		SR5-1	DO NOT ENTER	1219 X 1219	C	X																
	5	FR1-2	YIELD	1524 X 1524 X 1524	C	X		(MOUNTED BACK TO BACK)										X				
		SR5-1	DO NOT ENTER	1219 X 1219	C	X																
	6	M3-3	SOUTH	610 X 305	C		X			X												
		M1-6L	LOOP 1604	914 X 914	C		X															
		M6-3	↑	533 X 381	C		X															
		M3-1	NORTH	610 X 305	C		X															
		M1-6L	LOOP 1604	914 X 914	C		X															
		M6-1R	→	533 X 381	C		X															
	7	R6-1R	ONE WAY	914 X 305	A	X		X	(MOUNTED BACK TO BACK)													
		R6-1L	ONE WAY	914 X 305	A	X																
	8	R4-7	KEEP RIGHT	610 X 762	C	X		X	(MOUNTED BACK TO BACK)													
		R3-7L	LEFT LANE MUST TURN LEFT	762 X 762	C	X																
	9	M3-1	NORTH	610 X 305	C		X	X														
		M1-6L	LOOP 1604	914 X 914	C		X															
		M6-1L	←	533 X 381	C		X															
	10	R6-1R	ONE WAY	914 X 305	A	X		X	(MOUNTED BACK TO BACK)													
		R6-1L	ONE WAY	914 X 305	A	X																
	11		(SEE LARGE SIGN SUMMARY)																			
	12	SR5-1	DO NOT ENTER	1219 X 1219	C	X			(MOUNTED BACK TO BACK)									X				
		R3-7L	LEFT LANE MUST TURN LEFT	762 X 762	C	X																
	13	SR5-1	DO NOT ENTER	1219 X 1219	C	X												X				
	14	FR1-2	YIELD	1524 X 1524 X 1524	C	X			(MOUNTED BACK TO BACK)									X				
		SR5-1	DO NOT ENTER	1219 X 1219	C	X																
	15	R6-1R	ONE WAY	914 X 305	A	X		X														
	16	R6-1R	ONE WAY	914 X 305	A	X		X														
	17	SR5-1A	WRONG WAY	1067 X 762	C	X												X				
	18	SR5-1A	WRONG WAY	1067 X 762	C	X												X				
						PAGE TOTALS		12		1		1						9				

ALUMINUM SIGN BLANKS (TYPE A)

SQUARE METERS	MIN. THICKNESS
LESS THAN 0.7	2.0 mm
0.7 TO 1.4	2.5 mm
GREATER THAN 1.4	3.0 mm

SIGN SUPPORTS SHALL BE LOCATED AS SHOWN ON THE PLANS, EXCEPT THAT THE ENGINEER MAY SHIFT THE SIGN SUPPORTS, WITHIN DESIGN GUIDELINES, WHERE NECESSARY TO SECURE A MORE DESIRABLE LOCATION OR TO AVOID CONFLICT WITH UTILITIES. UNLESS OTHERWISE SHOWN ON THE PLANS, THE CONTRACTOR SHALL STAKE AND THE ENGINEER WILL VERIFY ALL SIGN SUPPORT LOCATIONS.

REFLECTIVE SHEETING WILL BE DESIGNATED AS:

TYPE A - ENGINEER GRADE
TYPE B - SUPER ENGINEER GRADE
TYPE C - HIGH SPECIFIC INTENSITY

SUMMARY OF SMALL SIGNS
SHEET 2 OF 8

ORIGINAL DRAWING DATE:
REVISIONS
DGN: PKG
DWN: JJ
CKD: PKG
DATE: JJ
REVISION
FEDERAL AID PROJECT
SHEET 49
15 6
COUNTY BEXAR
CONTROL 2457 SECTION 01 JOB 0351 HIGHWAY P1604

LEVELS DISPLAYED

1	2	3	4	5	6	7	8	9	10	11	12	13	14	15	16	
17	18	19	20	21	22	23	24	25	26	27	28	29	30	31	32	
33	34	35	36	37	38	39	40	41	42	43	44	45	46	47	48	
49				53	54	55	56	57	58	59	60	61	62	63		

H:\DRAWINGS\6731603\QUANTITIES\SMALL_SIGN_SUMMARY_BORDER.DGN

SUMMARY OF SMALL SIGNS

PLAN SHEET NO.	SIGN NO.	SIGN TYPE	SIGN TEXT	SIGN DIMENSIONS (mm x mm)	REFLECTIVE SHEETING	PLYWOOD TYPE A	ALUMINUM TYPE A	TYPE OF MOUNT: A	A-1	B	C	D-1	D-2	D-3	D-4	D-5	D-6	F	MP	MW	STAND	4 POST
334	19	M3-3	SOUTH	810 X 305	C		X		X													
		M1-6L	LOOP 1604	914 X 914	C		X															
		M5-3L	↶	533 X 381	C		X															
	20	D1	BRAUN RD	VAR X 305	C	X						X										
	21	R3-8L	LEFT ONLY / THROUGH (VAR)	762 X 762	C	X		X	(MOUNTED BACK TO BACK)													
		R3-8L	LEFT ONLY / THROUGH (VAR)	762 X 762	C	X																
	22	M3-1	SOUTH	610 X 305	C		X		X													
		M1-6L	LOOP 1604	914 X 914	C		X															
		M6-1L	←	533 X 381	C		X															
	23	M3-3	NORTH	610 X 305	C		X		X													
		M1-6L	LOOP 1604	914 X 914	C		X															
		M5-3L	↶	533 X 381	C		X															
	24	SR5-1A	WRONG WAY	1067 X 762	C	X		X														
	25	SR5-1A	WRONG WAY	1067 X 762	C	X		X														
	26	R3-7R	RIGHT LANE MUST TURN RIGHT	762 X 762	C	X		X														
	27		(SEE LARGE SIGN SUMMARY)																			
	28	SR5-1	DO NOT ENTER	1219 X 1219	C	X	(MOUNTED BACK TO BACK)											X				
		R3-7L	LEFT LANE MUST TURN LEFT	762 X 762	C	X																
	29	SR5-1	DO NOT ENTER	1219 X 1219	C	X												X				
	30	FR1-2	YIELD	1524 X 1524 X 1524	C	X	(MOUNTED BACK TO BACK)											X				
		SR5-1	DO NOT ENTER	1219 X 1219	C	X																
	31	R6-1L	ONE WAY	914 X 305	A	X		X	(MOUNTED BACK TO BACK)													
		R6-1R	ONE WAY	914 X 305	A	X																
	32	R12-1T	WEIGHT LIMIT GROSS 44000 LBS	610 X 914	C	X		X														
	33	R4-7	KEEP RIGHT	610 X 762	C	X		X	(MOUNTED BACK TO BACK)													
		R3-7L	LEFT LANE MUST TURN LEFT	762 X 762	C	X																
	34	R6-1L	ONE WAY	914 X 305	A	X		X	(MOUNTED BACK TO BACK)													
		R6-1R	ONE WAY	914 X 305	A	X																
	35	M3-1	NORTH	610 X 305	C		X			X												
		M1-6L	LOOP 1604	914 X 914	C		X															
		M6-3	↑	533 X 381	C		X															
		M3-3	SOUTH	610 X 305	C		X															
		M1-6L	LOOP 1604	914 X 914	C		X															
		M6-1R	→	533 X 381	C		X															
	36	FR1-2	YIELD	1524 X 1524 X 1524	C	X	(MOUNTED BACK TO BACK)											X				
		SR5-1	DO NOT ENTER	1219 X 1219	C	X																
	37	FR1-2	YIELD	1524 X 1524 X 1524	C	X	(MOUNTED BACK TO BACK)											X				
		SR5-1	DO NOT ENTER	1219 X 1219	C	X																
	38	FR2-1	SPEED LIMIT 55	914 X 1219	A	X												X				
	39	R6-1R	ONE WAY	914 X 305	A	X		X														
							PAGE TOTALS	9	3	1		1						6				

ALUMINUM SIGN BLANKS (TYPE A)

SQUARE METERS	MIN. THICKNESS
LESS THAN 0.7	2.0 mm
0.7 TO 1.4	2.5 mm
GREATER THAN 1.4	3.0 mm

SIGN SUPPORTS SHALL BE LOCATED AS SHOWN ON THE PLANS, EXCEPT THAT THE ENGINEER MAY SHIFT THE SIGN SUPPORTS, WITHIN DESIGN GUIDELINES, WHERE NECESSARY TO SECURE A MORE DESIRABLE LOCATION OR TO AVOID CONFLICT WITH UTILITIES, UNLESS OTHERWISE SHOWN ON THE PLANS, THE CONTRACTOR SHALL STAKE AND THE ENGINEER WILL VERIFY ALL SIGN SUPPORT LOCATIONS.

REFLECTIVE SHEETING WILL BE DESIGNATED AS:

TYPE A - ENGINEER GRADE
TYPE B - SUPER ENGINEER GRADE
TYPE C - HIGH SPECIFIC INTENSITY

SUMMARY OF SMALL SIGNS

SHEET 3 OF 8

ORIGINAL DRAWING DATE:
REVISIONS

DGN: PKG
DGN: PKG

STATE DISTRICT 15 | FEDERAL AID REGION 6 | FEDERAL AID PROJECT | SHEET 50

COUNTY BEXAR | CONTROL 2452 | SECTION 01 | JOB 035 | HIGHWAY P1604

LEVELS DISPLAYED																
1	2	3	4	5	6	7	8	9	10	11	12	13	14	15	16	
17	18	19	20	21	22	23	24	25	26	27	28	29	30	31	32	
33	34	35	36	37	38	39	40	41	42	43	44	45	46	47	48	
49			53	54	55	56	57	58	59	60	61	62	63			

H:\DRAWINGS\6731603\QUANTITIES\SMALL_SIGN_SUMMARY_BORDER.DGN

SUMMARY OF SMALL SIGNS

PLAN SHEET NO.	SIGN NO.	SIGN TYPE	SIGN TEXT	SIGN DIMENSIONS (mm x mm)	REFLECTIVE SHEETING	PLYWOOD TYPE A	ALUMINUM TYPE A	TYPE OF MOUNT: A	A-1	B	C	D-1	D-2	D-3	D-4	D-5	D-6	F	MP	MW	STAND	4 POST
335	1	R3-8L	LEFT ONLY/THROUGH (VAR)	762 X 762	C	X		X														
	2	R6-1R	ONE WAY	914 X 305	A	X		X														
	3		(SEE LARGE SIGN SUMMARY)																			
	4	SW3-3	SIGNAL AHEAD	1219 X 1219	C	X												X				
	5	SW3-3	SIGNAL AHEAD	1219 X 1219	C	X												X				
	6	FR2-1	SPEED LIMIT 55	914 X 1219	C	X												X				
	7	R6-1R	ONE WAY	914 X 305	A	X		X														
	8		(SEE LARGE SIGN SUMMARY)																			
	9	R6-1R	ONE WAY	914 X 305	A	X		X														
	10	M3-3	SOUTH	610 X 305	C		X		X													
		M1-6L	LOOP 1604	914 X 914	C		X															
	11	SW3-3	SIGNAL AHEAD	914 X 914	C	X												X				
	12	SW3-3	SIGNAL AHEAD	914 X 914	C	X												X				
	13	D1	← NEW GUILBEAU RD	VAR X 305	C	X						X										
336	1	M3-1	NORTH	610 X 305	C		X		X													
		M1-6L	LOOP 1604	914 X 914	C		X															
	2	R6-1R	ONE WAY	914 X 305	A	X		X		(MOUNTED BACK TO BACK)												
		R6-1L	ONE WAY	914 X 305	A	X																
	3	M3-3	SOUTH	610 X 305	C		X			X												
		M1-6L	LOOP 1604	914 X 914	C		X															
		M6-3	↑	533 X 381	C		X															
		M3-1	NORTH	610 X 305	C		X															
		M1-6L	LOOP 1604	914 X 914	C		X															
		M6-1R	→	533 X 381	C		X															
	4	R3-7R	RIGHT LANE MUST TURN RIGHT	762 X 762	C	X		X														
	5	R3-8R	RIGHT ONLY / THROUGH (VAR)	762 X 762	C	X		X														
	6	SR5-1	DO NOT ENTER	1219 X 1219	C	X												X				
	7	SR5-1	DO NOT ENTER	1219 X 1219	C	X												X				
	8	SR5-1A	WRONG WAY	1067 X 762	C	X												X				
	9	SR5-1A	WRONG WAY	1067 X 762	C	X												X				
	10	SR5-1A	WRONG WAY	1067 X 762	C	X												X				
	11	SR5-1A	WRONG WAY	1067 X 762	C	X												X				
	12	SR5-1	DO NOT ENTER	1219 X 1219	C	X												X				
	13	SR5-1	DO NOT ENTER	1219 X 1219	C	X												X				
	14	M3-3	SOUTH	610 X 305	C		X		X													
		M1-6L	LOOP 1604	914 X 914	C		X															
		M6-IL	←	533 X 381	C		X															
						PAGE TOTALS		7	3	1		1						13				

SIGN SUPPORTS SHALL BE LOCATED AS SHOWN ON THE PLANS, EXCEPT THAT THE ENGINEER MAY SHIFT THE SIGN SUPPORTS, WITHIN DESIGN GUIDELINES, WHERE NECESSARY TO SECURE A MORE DESIRABLE LOCATION OR TO AVOID CONFLICT WITH UTILITIES, UNLESS OTHERWISE SHOWN ON THE PLANS. THE CONTRACTOR SHALL STAKE AND THE ENGINEER WILL VERIFY ALL SIGN SUPPORT LOCATIONS.

REFLECTIVE SHEETING WILL BE DESIGNATED AS:

TYPE A - ENGINEER GRADE
TYPE B - SUPER ENGINEER GRADE
TYPE C - HIGH SPECIFIC INTENSITY

ALUMINUM SIGN BLANKS (TYPE A)

SQUARE METERS	MIN. THICKNESS
LESS THAN 0.7	2.0 mm
0.7 TO 1.4	2.5 mm
GREATER THAN 1.4	3.0 mm

SUMMARY OF SMALL SIGNS
SHEET 4 OF 8

ORIGINAL DRAWING DATE:
REVISIONS
DGN: PKG
CKD: JJ
DWN: PKG
CKD: JJ
DISTRICT: 15
FEDERAL REGION: 6
FEDERAL AID PROJECT
SHEET: 51
COUNTY: BEXAR
CONTROL: 2452
SECTION: 01
JOB: 035
HIGHWAY: LP1604

LEVELS DISPLAYED															
1	2	3	4	5	6	7	8	9	10	11	12	13	14	15	16
17	18	19	20	21	22	23	24	25	26	27	28	29	30	31	32
33	34	35	36	37	38	39	40	41	42	43	44	45	46	47	48
49				53	54	55	56	57	58	59	60	61	62	63	

H:\DRAWINGS\6731603\QUANTITIES\SMALL_SIGN_SUMMARY_BORDER.DGN

SUMMARY OF SMALL SIGNS

PLAN SHEET NO.	SIGN NO.	SIGN TYPE	SIGN TEXT	SIGN DIMENSIONS (mm x mm)	REFLECTIVE SHEETING	PLYWOOD TYPE A	ALUMINUM TYPE A	TYPE OF MOUNT: A	A-1	B	C	D-1	D-2	D-3	D-4	D-5	D-6	F	MP	MW	STAND	4 POST
336	15		SEE LARGE SIGN SUMMARY																			
	16	R6-1L	ONE WAY	914 X 305	A	X		X														
	17	D13-3	CROSSOVER ←→	1524 X 762	C	X									X	(MOUNTED BACK TO BACK)						
		D13-3	CROSSOVER ←→	1524 X 762	C	X																
	18	R6-1R	ONE WAY	914 X 305	A	X		X														
	19	M3-3	SOUTH	610 X 305	C		X		X													
		M1-6L	LOOP 1604	914 X 914	C		X															
	20	FR2-1	SPEED LIMIT 55	914 X 1219	C	X												X				
337	1	D3-1	NEW GUILBEAU ROAD	VAR X 305	C	X						X										
	2	SW3-3	SIGNAL AHEAD	914 X 914	C	X												X				
	3	SW3-3	SIGNAL AHEAD	914 X 914	C	X												X				
	4	FR1-2	YIELD	1524 X 1524 X 1524	C	X												X				
	5	M1-6L	LOOP 1604	914 X 914	C		X		X													
		M6-IR	→	533 X 381	C		X															
	6	R4-7	KEEP RIGHT	610 X 762	C	X		X														
	7	SR5-1	DO NOT ENTER	1219 X 1219	C	X												X				
	8	R6-1R	ONE WAY	914 X 305	A	X		X														
	9	SR5-1A	WRONG WAY	1067 X 762	C	X												X				
	10	SR5-1A	WRONG WAY	1067 X 762	C	X												X				
	11	SW2-2R	SIDE ROAD	1219 X 1219	C	X												X				
		PLAQUE	"LESLIE ROAD"	914 X 610	C	X																
	12	SW19-2 (SF	WATCH FOR ICE ON BRIDGE (FOLDING)	1219 X 1219	C	X												X				
	13	SW19-2 (SF	WATCH FOR ICE ON BRIDGE (FOLDING)	1219 X 1219	C	X												X				
338	1	SW2-2R	SIDE ROAD	1219 X 1219	C	X												X				
		PLAQUE	"BOWENS CROSSING"	914 X 610	C	X																
	2	SR5-1	DO NOT ENTER	1219 X 1219	C	X												X				
	3	SR5-1	DO NOT ENTER	1219 X 1219	C	X												X				
	4	R6-1R	ONE WAY	914 X 305	A	X		X														
	5	R6-1R	ONE WAY	914 X 305	C	X		X														
	5A	R1-1	STOP	762 X 762	C	X		X														
	6	I-3	HELOTES CREEK	VAR X 457	A	X		X														
	7	I-3	HELOTES CREEK	VAR X 457	A	X		X														
	8	SW2-2R	SIDE ROAD RIGHT	1219 X 1219	C	X												X				
	9	W1-1R	RIGHT TURN	762 X 762	C	X		X														
		W13-1	15 M.P.H.	610 X 610	C	X																
					PAGE TOTALS			10	2			1			1			14				

ALUMINUM SIGN BLANKS (TYPE A)

SQUARE METERS	MIN. THICKNESS
LESS THAN 0.7	2.0 mm
0.7 TO 1.4	2.5 mm
GREATER THAN 1.4	3.0 mm

SIGN SUPPORTS SHALL BE LOCATED AS SHOWN ON THE PLANS, EXCEPT THAT THE ENGINEER MAY SHIFT THE SIGN SUPPORTS, WITHIN DESIGN GUIDELINES, WHERE NECESSARY TO SECURE A MORE DESIRABLE LOCATION OR TO AVOID CONFLICT WITH UTILITIES. UNLESS OTHERWISE SHOWN ON THE PLANS, THE CONTRACTOR SHALL STAKE AND THE ENGINEER WILL VERIFY ALL SIGN SUPPORT LOCATIONS.

REFLECTIVE SHEETING WILL BE DESIGNATED AS:

TYPE A - ENGINEER GRADE
TYPE B - SUPER ENGINEER GRADE
TYPE C - HIGH SPECIFIC INTENSITY

SUMMARY OF SMALL SIGNS
SHEET 5 OF 8

ORIGINAL DRAWING DATE
REVISIONS
DGN: PKG
DWN: SC
CKD: PKG
PLAN: JJ
FEDERAL AID PROJECT
STATE: TEXAS
FEDERAL AID PROJECT: 15
FEDERAL: 6
SHEET: 52
COUNTY: BEXAR
CONTROL: 2452 01
SECTION: 035
JOB:
HIGHWAY: IH 1604

LEVELS DISPLAYED															
1	2	3	4	5	6	7	8	9	10	11	12	13	14	15	16
17	18	19	20	21	22	23	24	25	26	27	28	29	30	31	32
33	34	35	36	37	38	39	40	41	42	43	44	45	46	47	48
49				53	54	55	56	57	58	59	60	61	62	63	

H:\DRAWINGS\6731603\QUANTITIES\SMALL_SIGN_SUMMARY_BORDER.DGN

SUMMARY OF SMALL SIGNS

PLAN SHEET NO.	SIGN NO.	SIGN TYPE	SIGN TEXT	SIGN DIMENSIONS (mm x mm)	REFLECTIVE SHEETING	PLYWOOD TYPE A	ALUMINUM TYPE A	TYPE OF MOUNT: A	A-1	B	C	D-1	D-2	D-3	D-4	D-5	D-6	F	MP	MW	STAND	4 POST
338	10	M1-6L	LOOP 1604	914 X 914	C		X		X													
		M6-1R	→	533 X 281	C		X															
	11		SEE LARGE SIGN SUMMARY																			
	12	W3-1A	STOP AHEAD	918 X 918	C	X		X														
	13	W1-1L	LEFT TURN	762 X 762	C	X		X														
		W13-1	15 M.P.H.	610 X 610	C	X																
339	1		(SEE LARGE SIGN SUMMARY)																			
	2	SR5-1	DO NOT ENTER	1219 X 1219	C	X												X				
	3	SR5-1	DO NOT ENTER	1219 X 1219	C	X												X				
	4	R6-1R	ONE WAY	914 X 305	A	X		X														
	5	R6-1R	ONE WAY	914 X 305	A	X		X														
	6	SW19-2 (SF	WATCH FOR ICE ON BRIDGE (FOLDING)	1219 X 1219	C	X												X				
	7	SW19-2 (SF	WATCH FOR ICE ON BRIDGE (FOLDING)	1219 X 1219	C	X												X				
	8	M3-3	SOUTH	610 X 305	C		X		X													
		M1-6L	LOOP 1604	914 X 914	C		X															
	9	R1-1	STOP	762 X 762	C	X		X														
	9A	R6-1R	ONE WAY	914 X 305	A	X		X														
	10	R1-1	STOP	762 X 762	C	X		X														
	11	SW14-2	NO OUTLET	762 X 762	C	X		X														
	12	W8-3 (SPL)	ROAD ENDS	914 X 914	C	X		X														
		PLAQUE	1000 FT	762 X 305	C	X																
340	1	SW2-2R	SIDE ROAD RIGHT	1219 X 1219	C	X												X				
	2	SR5-1	DO NOT ENTER	1219 X 1219	C	X												X				
	3	SR5-1	DO NOT ENTER	1219 X 1219	C	X												X				
	4	R1-1	STOP	762 X 762	C	X		X														
	5	R6-1R	ONE WAY	914 X 305	A	X		X														
	6	R1-1	STOP	762 X 762	C	X		X														
	6A	R6-1R	ONE WAY	914 X 305	A	X		X														
	7	FW9-1R	RIGHT LANE ENDS	1219 X 1219	C	X												X				
		PLAQUE	1500 FT	762 X 305	C	X																
	8	FW9-1R	RIGHT LANE ENDS	1219 X 1219	C	X												X				
		PLAQUE	1500 FT	762 X 305	C	X																
341	1	FR2-1	SPEED LIMIT 55	914 X 1219	C	X												X				
	2	D3-1	SHAENFIELD RD	VAR X 305	C	X						X										
	3	M3-1	NORTH	610 X 305	C		X		X													
		M1-6L	LOOP 1604	914 X 914	C		X															
					PAGE TOTALS			13	3			1						10				

ALUMINUM SIGN BLANKS (TYPE A)

SQUARE METERS	MIN. THICKNESS
LESS THAN 0.7	2.0 mm
0.7 TO 1.4	2.5 mm
GREATER THAN 1.4	3.0 mm

SIGN SUPPORTS SHALL BE LOCATED AS SHOWN ON THE PLANS, EXCEPT THAT THE ENGINEER MAY SHIFT THE SIGN SUPPORTS, WITHIN DESIGN GUIDELINES, WHERE NECESSARY TO SECURE A MORE DESIRABLE LOCATION OR TO AVOID CONFLICT WITH UTILITIES. UNLESS OTHERWISE SHOWN ON THE PLANS, THE CONTRACTOR SHALL STAKE AND THE ENGINEER WILL VERIFY ALL SIGN SUPPORT LOCATIONS.

REFLECTIVE SHEETING WILL BE DESIGNATED AS:

TYPE A - ENGINEER GRADE
TYPE B - SUPER ENGINEER GRADE
TYPE C - HIGH SPECIFIC INTENSITY

SUMMARY OF SMALL SIGNS
SHEET 6 OF 8

ORIGINAL DRAWING DATE:
REVISION
Dsn: PKG
Ckd: JJ
Drn: PKG
Ckd: JJ

DISTRICT	COUNTY	FEDERAL AID PROJECT	SHEET
15	BEXAR		53

CONTROL	SECTION	JOB	HIGHWAY
2452	01	035	P1604

LEVELS DISPLAYED															
1	2	3	4	5	6	7	8	9	10	11	12	13	14	15	16
17	18	19	20	21	22	23	24	25	26	27	28	29	30	31	32
33	34	35	36	37	38	39	40	41	42	43	44	45	46	47	48
49				53	54	55	56	57	58	59	60	61	62	63	

H:\DRAWINGS\6731603\QUANTITIES\SMALL_SIGN_SUMMARY_BORDER.DGN

SUMMARY OF SMALL SIGNS

PLAN SHEET NO.	SIGN NO.	SIGN TYPE	SIGN TEXT	SIGN DIMENSIONS (mm x mm)	REFLECTIVE SHEETING	PLYWOOD TYPE A	ALUMINUM TYPE A	TYPE OF MOUNT: A	A-1	B	C	D-1	D-2	D-3	D-4	D-5	D-6	F	MP	MW	STAND	4 POST
341	4	SR5-1A	WRONG WAY	1067 X 762	C	X												X				
	5	SR5-1A	WRONG WAY	1067 X 762	C	X												X				
	6	SR5-1	DO NOT ENTER	1219 X 1219	C	X												X				
	7	SR5-1	DO NOT ENTER	1219 X 1219	C	X												X				
	8	SR1-2	YIELD	1067 X 1067 X 1067	C	X												X				
	9	M3-1	NORTH	610 X 305	C		X			X												
		M1-6L	LOOP 1604	914 X 914	C		X															
		M6-3	↑	533 X 381	C		X															
		M3-3	SOUTH	610 X 305	C		X															
		M1-6L	LOOP 1604	914 X 914	C		X															
		M6-1R	→	533 X 381	C		X															
	10	R1-1	STOP	762 X 762	C	X		X														
	10A	R6-1R	ONE WAY	914 X 305	A	X		X		(MOUNTED BACK TO BACK)												
		R6-1L	ONE WAY	914 X 305	A	X																
	11	SR1-2	YIELD	1067 X 1067 X 1067	C	X												X				
	12		SEE LARGE SIGN SUMMARY																			
	13	R6-IL	ONE WAY	914 X 305	A	X		X														
	14	M3-1	NORTH	610 X 305	C		X	X														
		M1-6L	LOOP 1604	914 X 914	C		X															
		M6-IL	←	533 X 381	C		X															
	15	SR5-1	DO NOT ENTER	1219 X 1219	C	X												X				
	16	SR5-1	DO NOT ENTER	1219 X 1219	C	X												X				
	17	SR5-1A	WRONG WAY	1067 X 762	C	X												X				
	18	SR5-1A	WRONG WAY	1067 X 762	C	X												X				
	19	D13-3	CROSSOVER ↔	1524 X 762	C	X									X		(MOUNTED BACK TO BACK)					
		D13-3	CROSSOVER ↔	1524 X 762	C	X																
342	1	FW4-2R	LANE REDUCTION AHEAD	1219 X 1219	C	X												X				
	2	FW4-2R	LANE REDUCTION AHEAD	1219 X 1219	C	X												X				
	3	D1	← SHAENFIELD ROAD	VAR X 305	C	X						X										
343	1	FR4-2	PASS WITH CARE	1219 X 1524	C	X												X				
	2	FR2-1	SPEED LIMIT 55	914 X 1219	C	X												X				
	3	M3-1	NORTH	610 X 305	C		X		X													
		M1-6L	LOOP 1604	914 X 914	C		X															
	4	SR5-1A	WRONG WAY	1067 X 762	C	X												X				
	5	SR5-1A	WRONG WAY	1067 X 762	C	X												X				
	6	SW6-2	DIVIDED HWY END	1219 X 1219	C	X												X				
	7	R6-1R	ONE WAY	914 X 305	A	X		X														
							PAGE TOTALS	5	1	1		1			1			17				

ALUMINUM SIGN BLANKS (TYPE A)

SQUARE METERS	MIN. THICKNESS
LESS THAN 0.7	2.0 mm
0.7 TO 1.4	2.5 mm
GREATER THAN 1.4	3.0 mm

SIGN SUPPORTS SHALL BE LOCATED AS SHOWN ON THE PLANS, EXCEPT THAT THE ENGINEER MAY SHIFT THE SIGN SUPPORTS, WITHIN DESIGN GUIDELINES, WHERE NECESSARY TO SECURE A MORE DESIRABLE LOCATION OR TO AVOID CONFLICT WITH UTILITIES. UNLESS OTHERWISE SHOWN ON THE PLANS, THE CONTRACTOR SHALL STAKE AND THE ENGINEER WILL VERIFY ALL SIGN SUPPORT LOCATIONS.

REFLECTIVE SHEETING WILL BE DESIGNATED AS:

TYPE A - ENGINEER GRADE
TYPE B - SUPER ENGINEER GRADE
TYPE C - HIGH SPECIFIC INTENSITY

SUMMARY OF SMALL SIGNS

SHEET 7 OF 8

ORIGINAL DRAWING SIZE: 22x34

REVISIONS

DESIGN: PKG
DRAWN: PKG
CHK BY: JJ

STATE: TEXAS
DISTRICT: 15
COUNTY: BEXAR
FEDERAL AID PROJECT
CONTROL: 2452-01
SECTION: 035
JOB: 6
SHEET: 54
NUMBER: 1604

LEVELS DISPLAYED															
1	2	3	4	5	6	7	8	9	10	11	12	13	14	15	16
17	18	19	20	21	22	23	24	25	26	27	28	29	30	31	32
33	34	35	36	37	38	39	40	41	42	43	44	45	46	47	48
49				53	54	55	56	57	58	59	60	61	62	63	

H:\DRAWINGS\6731603\QUANTITIES\SMALL_SIGN_SUMMARY_BORDER.DGN

SUMMARY OF SMALL SIGNS

PLAN SHEET NO.	SIGN NO.	SIGN TYPE	SIGN TEXT	SIGN DIMENSIONS (mm x mm)	REFLECTIVE SHEETING	PLYWOOD TYPE A	ALUMINUM TYPE A	TYPE OF MOUNT														
								A	A-1	B	C	D-1	D-2	D-3	D-4	D-5	D-6	F	MP	MW	STAND	X4POST
343	8	SR5-1	DO NOT ENTER	1219 X 1219	C	X												X				
	9	FR4-7	KEEP RIGHT	1219 X 1524	C	X												X				
344	1		(SEE LARGE SIGN SUMMARY)																			
	2	SW6-3	TWO WAY TRAFFIC	1219 X 1219	C	X												X				
	3	M3-3	SOUTH	610 X 305	C		X		X													
		M1-6L	LOOP 1604	914 X 914	C		X															
	4	SW6-3	DO NOT PASS	1219 X 1524	C	X												X				
345	1	SW6-1	DIVIDED HWY BEGIN	1219 X 1219	C	X												X				
	2	FR2-1	SPEED LIMIT 55	914 X 1219	C	X												X				
							PAGE TOTALS		1									6				
							PROJECT TOTALS	66	14	4		7	1		2			86				

ALUMINUM SIGN BLANKS (TYPE A)

SQUARE METERS	MIN. THICKNESS
LESS THAN 0.7	2.0 mm
0.7 TO 1.4	2.5 mm
GREATER THAN 1.4	3.0 mm

SIGN SUPPORTS SHALL BE LOCATED AS SHOWN ON THE PLANS, EXCEPT THAT THE ENGINEER MAY SHIFT THE SIGN SUPPORTS, WITHIN DESIGN GUIDELINES, WHERE NECESSARY TO SECURE A MORE DESIRABLE LOCATION OR TO AVOID CONFLICT WITH UTILITIES. UNLESS OTHERWISE SHOWN ON THE PLANS, THE CONTRACTOR SHALL STAKE AND THE ENGINEER WILL VERIFY ALL SIGN SUPPORT LOCATIONS.

REFLECTIVE SHEETING WILL BE DESIGNATED AS:

TYPE A - ENGINEER GRADE
TYPE B - SUPER ENGINEER GRADE
TYPE C - HIGH SPECIFIC INTENSITY

SUMMARY OF SMALL SIGNS

SHEET 8 OF 8

ORIGINAL DRAWING DATE:
DN:- PKG
CK:- JJ
DW:- PKG
CK:- JJ

REVISIONS

STATE DISTRICT: 15
FEDERAL REGION: 6
FEDERAL AID PROJECT

COUNTY: BEXAR
CONTROL: 2452
SECTION: 01
JOB: 035
HIGHWAY: P1604

SUMMARY OF LARGE SIGNS

PLAN SHEET NO.	SIGN NO.	SIGN BACK-GROUND COLOR	SIGN TYPE	SIGN TEXT	SIGN DIMENSIONS (mm x mm)	BACK-GROUND SHEETING REFL.	BACK-GROUND SHEETING NON-REFL.	GROUND MOUNT SUBSTRATE TYPE A SQUARE METERS PLYWOOD	GROUND MOUNT SUBSTRATE TYPE A SQUARE METERS ALUMINUM	OVERHEAD SUBSTRATE ALUMINUM SQUARE METERS TYPE A	OVERHEAD SUBSTRATE ALUMINUM SQUARE METERS TYPE O	TYPE OF MOUNT	"X" DIMENSION ◒ post 1	"X" DIMENSION post 2	"X" DIMENSION post 3	GALVANIZED PIPE POST METERS	GALVANIZED STRUCTURAL STEEL SIZE	GALVANIZED STRUCTURAL STEEL METERS post 1	GALVANIZED STRUCTURAL STEEL METERS post 2	GALVANIZED STRUCTURAL STEEL TOTAL WEIGHT KG	DRILLED SHAFT (mm) METERS NON-REINF 300mm	DRILLED SHAFT (mm) METERS REINFORCED 900mm	NON-PART.
332	2	GREEN	SPL	TEXAS 16 San Antonio Bandera EXIT 1/2 MILE	5029 X 3506	C		17.63	0.84			320	1.87	2.00			S3X5.7	8.41	8.54	337.1	1.07		
333 333	3 4	GREEN	SPL	NORTH LOOP 1604	2134 X 2438	C		5.20	1.44			320					S3X5.7	5.48	5.48	225.1	1.07		
332 332	11 12	RED & WHITE RED	ERM OM-4R		2438 X 1219 457 X 457	C C		2.97 0.21				320					S3X5.7	4.26	4.26	179.5	1.07		
334 334	11 27	GREEN	SD 14-1	TURNAROUND	2438 X 1219	C		2.97				320					S3X5.7	4.26	4.26	179.5	1.07		
335 335	3 8	RED & WHITE RED	ERM OM-4R		2438 X 1219 457 X 457	C C		2.97 0.21				320					S3X5.7	4.26	4.26	179.5	1.07		
					PAGE TOTALS			32.16	2.28								PAGE TOTALS			1100.7	5.35		

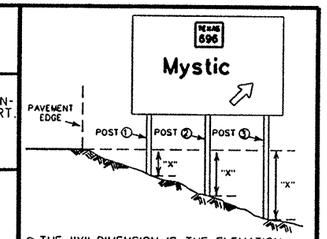

◒ THE "X" DIMENSION IS THE ELEVATION DIFFERENCE AT THE POST BETWEEN THE GROUND AND THE EDGE OF PAVEMENT OR TOP OF CURB.

GENERAL NOTES:

SIGNS SHOWN ON THIS SHEET ARE GENERALLY THOSE WITH REMOVEABLE LEGEND TEXTS. ALTHOUGH SCREENED LEGEND SIGNS MAY ALSO BE SHOWN (SEE SIGN TYPE)

ALL SIGNS SHALL BE ERECTED ACCORDING TO THE STATION NUMBER SHOWN ON THE PLAN AND PROFILE SHEETS EXCEPT THAT THE ENGINEER MAY SHIFT A SIGN IN ORDER TO SECURE A MORE DESIRABLE LOCATION. THE CONTRACTOR WILL STAKE ALL SIGN LOCATIONS, AND NO CHANGES IN THOSE LOCATIONS SHALL BE MADE WITHOUT PRIOR APPROVAL OF THE ENGINEER.

THE POST LENGTHS LISTED HERE ARE APPROXIMATIONS. THE CORRECTED POST LENGTHS WILL BE FURNISHED BY THE ENGINEER AFTER THE CONTRACTOR HAS PLACED THE STUD POSTS.

TOWER HEIGHTS SHALL BE VERIFIED WITH THE ENGINEER BEFORE FABRICATION.

REFLECTIVE SHEETING WILL BE DESIGNATED AS:

TYPE A - ENGINEER GRADE

TYPE B - SUPER ENGINEER GRADE

TYPE C - HIGH SPECIFIC INTENSITY

NON REFLECTIVE SHEETING WILL BE DESIGNATED AS:

CLASS D - POLYVINYLIDENE FLOURIDE PLASTIC THERMOSETTING COATINGS.

H:\DRAWINGS\67316O3\RPG\LGSGNSUM.DGN

LEVELS DISPLAYED

1	2	3	4	5	6	7	8	9	10	11	12	13	14	15	16
17	18	19	20	21	22	23	24	25	26	27	28	29	30	31	32
33	34	35	36	37	38	39	40	41	42	43	44	45	46	47	48
49	50	51	52	53	54	55	56	57	58	59	60	61	62	63	

SUMMARY OF LARGE SIGNS

ORIGINAL DRAWING DATE:			
DN.: PKG	REVISIONS		
CK.: JJ			
DW.: PKG			
CK.: JJ			

STATE DISTRICT	FEDERAL REGION	FEDERAL AID PROJECT	SHEET
15	6		56

COUNTY	CONTROL	SECTION	JOB	HIGHWAY
BEXAR	2452	01	035	LP1604

Traffic Operations Division

SUMMARY OF LARGE SIGNS

PLAN SHEET NO.	SIGN NO.	SIGN BACK-GROUND COLOR	SIGN TYPE	SIGN TEXT	SIGN DIMENSIONS (mm x mm)	BACK-GROUND SHEETING REFL.	BACK-GROUND SHEETING NON-REFL.	GROUND MOUNT SUBSTRATE TYPE A SQUARE METERS PLYWOOD	GROUND MOUNT SUBSTRATE TYPE A SQUARE METERS ALUMINUM	OVERHEAD SUBSTRATE ALUMINUM SQUARE METERS TYPE A	OVERHEAD SUBSTRATE ALUMINUM SQUARE METERS TYPE O	TYPE OF MOUNT	"X" DIMENSION ◒ post 1	"X" DIMENSION post 2	"X" DIMENSION post 3	GALVANIZED PIPE POST METERS	GALVANIZED STRUCTURAL STEEL SIZE	GALVANIZED STRUCTURAL STEEL METERS post 1	GALVANIZED STRUCTURAL STEEL METERS post 2	GALVANIZED STRUCTURAL STEEL TOTAL WEIGHT KG	DRILLED SHAFT (mm) NON-REINF 300mm	DRILLED SHAFT (mm) METERS REINFORCED 900mm	NON-PART.
336	15	YELLOW	W1-6L	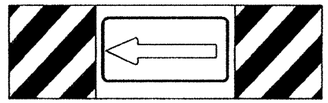	2438 X 1219	C		2.97				320					S3X5.7	4.26	4.26	179.5	1.07		
338	11	YELLOW	W1-6L	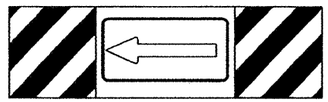	2438 X 1219	C		2.97				320					S3X5.7	4.26	4.26	179.5	1.07		
339	1	RED & WHITE	ERM	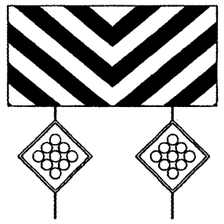	2438 X 1219	C		2.97				320					S3X5.7	4.26	4.26	179.5	1.07		
		RED	OM-4R		457 X 457	C		0.21															
341	12	YELLOW	W1-6L	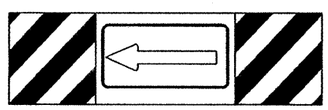	2438 X 1219	C		2.97				320					S3X5.7	4.26	4.26	179.5	1.07		
344	1	RED & WHITE	ERM	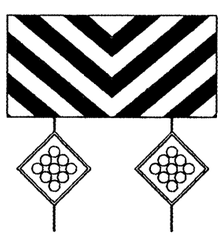	2438 X 1219	C		2.97				320					S3X5.7	4.26	4.26	179.5	1.07		
		RED	OM-4R		457 X 457	C		0.21															
								PROJECT TOTALS	47.43	2.28							PROJECT TOTALS			1998.2	10.70		

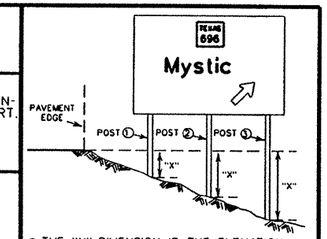

◒ THE "X" DIMENSION IS THE ELEVATION DIFFERENCE AT THE POST BETWEEN THE GROUND AND THE EDGE OF PAVEMENT OR TOP OF CURB.

GENERAL NOTES:

SIGNS SHOWN ON THIS SHEET ARE GENERALLY THOSE WITH REMOVEABLE LEGEND TEXTS, ALTHOUGH SCREENED LEGEND SIGNS MAY ALSO BE SHOWN (SEE SIGN TYPE)

ALL SIGNS SHALL BE ERECTED ACCORDING TO THE STATION NUMBER SHOWN ON THE PLAN AND PROFILE SHEETS EXCEPT THAT THE ENGINEER MAY SHIFT A SIGN IN ORDER TO SECURE A MORE DESIRABLE LOCATION. THE CONTRACTOR WILL STAKE ALL SIGN LOCATIONS, AND NO CHANGES IN THOSE LOCATIONS SHALL BE MADE WITHOUT PRIOR APPROVAL OF THE ENGINEER.

THE POST LENGTHS LISTED HERE ARE APPROXIMATIONS. THE CORRECTED POST LENGTHS WILL BE FURNISHED BY THE ENGINEER AFTER THE CONTRACTOR HAS PLACED THE STUD POSTS.

TOWER HEIGHTS SHALL BE VERIFIED WITH THE ENGINEER BEFORE FABRICATION.

REFLECTIVE SHEETING WILL BE DESIGNATED AS:

TYPE A - ENGINEER GRADE

TYPE B - SUPER ENGINEER GRADE

TYPE C - HIGH SPECIFIC INTENSITY

NON REFLECTIVE SHEETING WILL BE DESIGNATED AS:

CLASS D - POLYVINYLIDENE FLOURIDE PLASTIC THERMOSETTING COATINGS.

H:\DRAWINGS\673160 3\RPG\LGSGNSUMA.DGN

LEVELS DISPLAYED
1 2 3 4 5 6 7 8 9 10 11 12 13 14 15 16
17 18 19 20 21 22 23 24 25 26 27 28 29 30 31 32
33 34 35 36 37 38 39 40 41 42 43 44 45 46 47 48
49 50 51 52 53 54 55 56 57 58 59 60 61 62 63

SUMMARY OF LARGE SIGNS

ORIGINAL DRAWING DATE:

CK:-	PKG
CK:-	JJ
DW:-	PKG
CK:-	JJ

REVISIONS

STATE DISTRICT	FEDERAL REGION	FEDERAL AID PROJECT	SHEET
15	6		57

COUNTY	CONTROL	SECTION	JOB	HIGHWAY
BEXAR	2452	01	035	LP1604

Traffic Operations Division

PAVEMENT MARKING SUMMARY

SHEET NO.	STATION TO STATION	REF PAV MRK TY-I													TRAFFIC BUTTONS		JIGGLE BARS		REFLECTIVE MARKERS					ELIM EXT PAV MRK & MRKR			
		BROKEN		SOLID						ARROWS		WORD	NOSE		WHITE NON-REFL. 100mm EA. EST.	YELLOW NON-REFL. 100mm EA. EST.	WHITE 150mm EA. EST.	YELLOW 150mm EA. EST.			TYPE II-AA EA. EST.	TYPE II-CR EA. EST.		RAIS PAV MRKR EA. EST.	100mm M EST.	200mm M EST.	600mm M EST.
		WHITE 100mm M EST.	YELLOW 100mm M EST.	WHITE 100mm M EST.	WHITE 200mm M EST.	WHITE 600mm M EST.	YELLOW 100mm M EST.	YELLOW 200mm M EST.	YELLOW 600mm M EST.	WHITE SINGLE EA. EST.		WHITE EA. EST.	YELLOW EA. EST.														
347	9+760 - 9+960	120		445			460								224							38				310	228
348	9+960 - 10+320	210		1020	378	350	928	262	60						365		1043	192				146				240	10
349	10+320 - 10+680	150		860	313	70	726								278		100					100					
350	10+680 - 11+040	290		1700	700	600	1000			13		13	4		2300		500				20	300					
351	11+040 - 11+400	185		600	78	140	726	79							242		710					74					
352	11+400 - 11+760	165		1069		140	674		15	9		9	1		397							97					
353	11+760 - 12+120	180		745	146		250		25						240			170			21	84					
354	12+120 - 12+480	180		685		10	902								240						16	60					
355	12+480 - 12+840	180		650		20	752								240							60					
356	12+840 - 13+200	180		695		20	752								240						4	60					
357	13+200 - 13+560	170		950		35	527			3		3			397						4	100					
358	13+560 - 13+920	115		1005		50	720			1		1			150		397					43					
359	13+920 - 14+280	90		726			861		70						120			214			11	30					
360	14+280 - 14+640			440			812		75									480			68				205		
	PROJECT TOTALS	2215		11590	1615	1435	10090	341	245	26		26	5		5433		2750	1056			144	1192			205	550	238

SHEET NO.	STATION TO STATION	≠ REF PAV MRK TY-II										
		BROKEN		SOLID						ARROWS		WORD
		WHITE 100mm M EST.	YELLOW 100mm M EST.	WHITE 100mm M EST.	WHITE 200mm M EST.	WHITE 600mm M EST.	YELLOW 100mm M EST.	YELLOW 200mm M EST.	YELLOW 600mm M EST.	WHITE SINGLE EA. EST.		WHITE EA. EST.
347	9+760 - 9+960	120		445			460					
348	9+960 - 10+320	210		1020	378	350	928	262	60			
349	10+320 - 10+680	150		860	313	70	726					
350	10+680 - 11+040	290		1700	700	600	1000			13		13
351	11+040 - 11+400	185		600	78	140	726	79				
352	11+400 - 11+760	165		1069		140	674		15	9		9
353	11+760 - 12+120	180		745	146		250		25			
354	12+120 - 12+480	180		685		10	902					
355	12+480 - 12+840	180		650		20	752					
356	12+840 - 13+200	180		695		20	752					
357	13+200 - 13+560	170		950		35	527			3		3
358	13+560 - 13+920	115		1005		50	720			1		1
359	13+920 - 14+280	90		726			861		70			
360	14+280 - 14+640			440			812		75			
	PROJECT TOTALS	2215		11590	1615	1435	10090	341	245	26		26

≠ PROVIDES FOR SURFACE PREPARATION (SEALER) OF THE TY I REFLECTORIZED PAVEMENT MARKINGS TO BE PLACED.

H:\DRAWINGS\67316031\PMK\PAVESUM.DGN

LEVELS DISPLAYED

1	2	3	4	5	6	7	8	9	10	11	12	13	14	15	16		
17	18	19	20	21	22	23	24	25	26	27	28	29	30	31	32		
33	34	35	36	37	38	39	40	41	42	43	44	45	46	47	48		
49	50	51	52	53	54	55	56	57	58	59	60	61	62	63			

NO.	DATE	REVISION	APPROV.

Texas Department of Transportation
LOOP 1604

PAVEMENT MARKING SUMMARY

Kimley-Horn and Associates, Inc.

Designed	REK	DIST	FED REG	FEDERAL AID PROJECT				HIGHWAY
Checked	BLC	15	6					LP1604
Drawn	PKG	COUNTY			CONTROL	SECT	JOB	SHEET
Checked	BLC	BEXAR			2452	01	035	58

DELINEATION AND CONCRETE APRON SUMMARY

SHEET NO.	STATION TO STATION	DELINEATORS / OBJECT MRKRS ASM											REM DELIN & OBJ MRKS ASSMS EA.		RIPRAP APRN CONC CL "B" M3
		TYPE A D-SW(a) ASM.	TYPE A D-SW(a) SPL MNT	TYPE A D-DW(a) EA.	TYPE A D-DW(a) ASM.	TYPE A D-SY(a) EA.	TYPE A D-SY(a) ASM.	TYPE A D-DY(a) ASM.	TYPE 2 OM-2SR(a) ASM.	TYPE 2 OM-2HP(a) ASM.	TYPE 3 OM-3L EA.	TYPE 3 OM-3R EA.			
		EST.	EST.	EST.	EST.	EST.	EST.	EST.	EST.	EST.	EST.	EST.	EST.		EST.
331, 347	9+760 - 9+960								2		1		24		7.0
332, 348	9+960 - 10+320	15					46		2	1	1		11		17.5
333, 349	10+320 - 10+680	29					18		2						14.5
334, 350	10+680 - 11+040				3				15	8			15		40.5
335, 351	11+040 - 11+400								4	1			4		14.5
336, 352	11+400 - 11+760								2				12		20.5
337, 353	11+760 - 12+120								4	1			11		13.5
338, 354	12+120 - 12+480	17	8						8		1	1	8		14.5
339, 355	12+480 - 12+840	4							2		1	1	3		13.5
340, 356	12+840 - 13+200								2						9.0
341, 357	13+200 - 13+560								2				5		20.0
342, 358	13+560 - 13+920								4			1	4		3.5
343, 359	13+920 - 14+280	12					15			1					9.0
344, 360	14+280 - 14+640	7							2				14		4.5
345	14+640 - 15+000														2.0
	PROJECT TOTALS	84	8		3		79		51	12	4	3	111		204.0

LEVELS DISPLAYED
1 2 3 4 5 6 7 8 9 10 11 12 13 14 15 16
17 18 19 20 21 22 23 24 25 26 27 28 29 30 31 32
33 34 35 36 37 38 39 40 41 42 43 44 45 46 47 48
49 50 51 52 53 54 55 56 57 58 59 60 61 62 63

H:\DRAWINGS\673160 3\PM\PAVESUMA.DGN

NO.	DATE	REVISION	APPROV.

Texas Department of Transportation
LOOP 1604

DELINEATION/CONCRETE APRONS SUMMARY

Kimley-Horn and Associates, Inc.

Designed	REX	DIST	FED REG	FEDERAL AID PROJECT				HIGHWAY
Checked	BLC	15	6					LP1604
Drawn	PKG	COUNTY		CONTROL	SECT	JOB		SHEET
Checked	BLC	BEXAR		2452	01	035		58A

TRAFFIC SIGNAL SUMMARY DATA

PLAN SHEET NUMBER	LOCATION	CONDUIT			ELEC CNDR		GROUND BOX		ELEC SERV TYPE D	FOUNDATIONS				INSTAL OF HWY TRAF SIG	SIGNAL HEADS		BACK PLATES		TRAF SIG CABLE			TRAF SIG POLE ASM					DETECTORS		VIVDS	TEMP TRAF SIG (CONSTR)	PED POLE ASSEM	SALV TRAF SIG
		38 MM SCH 80 PVC	50 MM SCH 80 PVC	75 MM SCH 80 PVC	NO. 6 BARE	NO. 4 INSUL.	TYPE A	TYPE D		600 MM DRILL SHAFT	TRAF SIG CNTR FND	900 MM TYPE A DRILL SHAFT	900 MM TYPE B DRILL SHAFT		300 MM VEH SIG SEC	PED SIG SEC (2 IND IN 1 SEC)	3 SEC 300 MM	5 SEC 300 MM	TYPE A 7 CNDR 14 AWG	TYPE A 9 CNDR 14 AWG	TYPE C 2 CNDR 14 AWG	12.2 M 1 ARM MAST (STL)	12.2-11.0 2 ARM MAST (STL)	13.4-11.0 2 ARM MAST (STL)	13.4 M 1 ARM MAST (STL)	10.4 M STR (TY D) (STL)		PED PUSH BUT	VEH (14 AWG) SAWCUT LOOPS				
		M	M	M	M	M	EA.	EA.	EA.	M	EA.	M	M	EA.	EA.	EA.	EA.	EA.	M	M	M	EA.	EA.	EA.	EA.	EA.		EA.	M	EA	EA	EA.	EA.
		EST.	EST.	EST.	EST.	EST.	EST.	EST.	EST.	EST.	EST.	EST.	EST.	EST.	EST.	EST.	EST.	EST.	EST.	EST.	EST.	EST.	EST.	EST.	EST.	EST.		EST.	EST.	EST.	EST.	EST.	EST.
82	TEMP SIG @ BRAUN																													1	1		
307-311	BRAUN ROAD	160	1050	405	570	475	9	14	1	6	1	12	4.6	1	40	12	10	2	840	720	1760	1	1	1	1			12	432			4	1
312-314	NEW GUILBEAU ROAD	50	820	165	380	180	7	5	1	5	1		18.4	1	23	6	6	1	400	380	870					4		6	360			6	
315	BOWEN'S CROSSING																																1
	PROJECT TOTALS	210	1870	570	950	655	16	19	2	11	2	12	23	2	63	18	16	3	1240	1100	2630	1	1	1	1	4		18	792	1	1	10	2

NOTE: ELECTRIC SERVICE DATA INCLUDED ON SHEET 45.

H:\DRAWINGS\67316O3\PM\TARFF.DGN

LEVELS DISPLAYED
1 2 3 4 5 6 7 8 9 10 11 12 13 14 15 16
17 18 19 20 21 22 23 24 25 26 27 28 29 30 31 32
33 34 35 36 37 38 39 40 41 42 43 44 45 46 47 48
49 50 51 52 53 54 55 56 57 58 59 60 61 62 63

NO.	DATE	REVISION	APPROV.

Texas Department of Transportation
LOOP 1604

TRAFFIC SIGNAL SUMMARY

Kimley-Horn and Associates, Inc.

Designed	REK	DIS	FED REG	FEDERAL AID PROJECT •				HIGHWAY
Checked	BLC	15	6					LP1604
Drawn	PKG	COUNTY			CONTROL	SECT	JOB	SHEET
Checked	BLC	BEXAR			2452	01	035	59

NOTES:

*ALL STATIONING, EXCEPT THOSE MARKED *, IS ALONG THE ℄ OF LOOP 1604 AND IS APPROXIMATE. * STATIONING IS ALONG THE ℄ OF THE ROADWAY TO WHICH IT APPLIES.*

SUMMARY OF PROP. DRIVEWAY & COMMERCIAL ENTRANCES
(ITEM 530)

DRIVEWAY NUMBER	STATION	WIDTH @ ROW (m)	LENGTH (m)	ITEM 530 DRIVEWAYS (ACP)(TY 1) (m^2) EST.	ITEM 530 DRIVEWAYS (CONC.) (m^2) EST.
1	110+053 (LT.)*	4.0	14.5	66	
2	110+117 (LT.)*	3.1	1.6	24	
3	110+136 (LT.)*	3.7	1.4	25	
4	110+197 (LT.)*	4.0	1.4	30	
5	110+207 (LT.)*	7.5	1.4	37	
6	110+478 (LT.)*	4.0	8.0	47	
7	110+671 (LT.)*	12.3	1.7	70	
8	110+698 (LT.)*	12.3	1.3		62
9	110+737 (LT.)*	12.4	1.3		62
10	110+870 (LT.)*	11.9	1.7		62
11	110+901 (LT.)*	10.7	2.4		69
12	12+325 (RT.)	5.0	8.5	126	
13	12+674 (LT.)	3.8	29.8	134	
14	14+207 (LT.)	3.1	27.6	99	
17	11+632 (RT.)	3.5	27.9	111	
18	11+180 (RT.)	8.1	13.3	137	
19	211+109 (RT.)*	6.5	6.6	71	
20	211+023 (RT.)*	3.9	6.6	50	
21	210+510 (RT.)*	3.3	6.4	37	
22	210+221 (RT.)*	4.8	4.2	39	
23	11+068 (LT)	4.5	5.5		25

ALL CONCRETE DRIVEWAYS ARE COMMERICIAL.
ALL ASPHALT DRIVEWAYS ARE PRIVATE.
FOR FURTHER DETAILS ON DRIVEWAYS SEE SHEET(S) 145 & 146.

LEVELS DISPLAYED
1 2 3 4 5 6 7 8 9 10 11 12 13 14 15 16
17 18 19 20 21 22 23 24 25 26 27 28 29 30 31 32
33 34 35 36 37 38 39 40 41 42 43 44 45 46 47 48
49 50 51 52 53 54 55 56 57 58 59 60 61 62 63

H:\DRAWINGS\67316O3\RPG\DRIVESUM.DGN

NO.	DATE	REVISION	APPROV.

Texas Department of Transportation
LOOP 1604

SUMMARY OF PROP. DRIVEWAY & COMMERCIAL ENTRANCES

Kimley-Horn and Associates, Inc.

Designed	REK	DIST	FED REG	FEDERAL AID PROJECT				HIGHWAY
Checked	BLC	15	6					LP1604
Drawn	PKG	COUNTY		CONTROL	SECT	JOB		SHEET
Checked	BLC	BEXAR		2452	01	035		60

LOCATION	BARRICADE TYPE	ROAD WORK NEXT MI G20-1	END ROAD WORK G20-2a	NAME AND ADD G20-6	OBSY WARN SIGN R20-3	ROAD WORK 1500' CW20-1A	ROAD WORK 1000' CW20-1B	ROAD WORK 500' CW20-1C	ROAD WORK AHEAD CW20-1D	DTR 1500' CW20-2A	DTR 1000' CW20-2B	CW1-4 L/R	DTR AHEAD CW20-2D	RT\LT LANE CLSD 1500' CW20-5A	RT\LT LANE CLSD 1000' CW20-5B	CW4-2L/R	RT\LT LANE CLSD AHEAD CW20-5D	SHLDR DROP OFF CW8-9A	LANE ENDS MERGE TR/LT CW9-2L/R	ROAD WORK NEXT MI G20-1b	FLSHR ARRW PANEL Spl	ECW 1-6A	VERT PANEL	M4-10 R/L	W1-8	RAMP CLSD R11-2	KEEP RIGHT R4-7B	ROAD CLSD R11-2	BE PRPRD TO STOP CW21-8	FLAG PRSN AHEAD CW20-7D	½ MILE PLAQUE 30"X12"
A		✓		✓	✓				(2)																					✓
B					✓				✓																					
C			✓																											
D	11																										✓			
E												✓																		
F																													✓	
G												✓				✓														
H															✓	✓														
I																									✓					
J					✓				✓										✓											
K																								✓			✓			
L																				✓										

FOR LOCATION OF BARRICADE/SIGNS SEE SEQUENCE OF WORK SHEETS

GENERAL NOTES FOR ALL PHASES OF WORK:

1 FOR PHASES OF CONSTRUCTION SEE SPECIAL PROVISION "DETOURS, BARRICADES, WARNING SIGNS, SEQUENCE OF WORK , ETC."

2 THE SIGNS, BARRICADES, ETC LISTED HEREON ARE CONSIDERED TO BE THE MINIMUM REQUIRED FOR TRAFFIC HANDLING ON THIS PROJECT.

3 SIGNS / BARRICADE MAINTENANCE SHALL BE DONE ON A REGULAR BASIS. THE MAINTENANCE OF THESE SIGNS / BARRICADES ARE THE RESPONSIBILTY OF THE CONTRACTOR.

4 THE NUMBER OF LANES ON ALL OTHER ROADWAYS SHALL BE AS NOTED

5 CULVERTS SHALL BE CONSTRUCTED WITH THE APPROPRIATE SEQUENCE OF ROADWAY SHOWN IN THE PLANS AND THE CONTRACTOR WILL NEED TO PROVIDE FOR THE PASSAGE OF WATER AND PUMP ANY WATER FROM RESULTING SUMP HOLES WHERE NECESSARY.

6 WORKING AREAS AND TRAFFIC CARRYING AREAS SHALL BE SEPARATED BY CTB (PORT) AND CTB (M&R). CONTRACTOR ACCESS PLANS TO THE WORKING AREAS SHALL BE SUBMITTED TO THE ENGINEER FOR APPROVAL.

7 VEHICULAR IMPACT ATTENTUATOR-VIA'S SHALL BE TEMPORARILY PLACED AT THE TRAFFIC APPROACH OF ALL PCTB'S THAT ARE TEMPORARILY USED WHEN HANDLING DETOUR TYPE TRAFFIC AND OTHER TEMPORARY LOCATIONS SHOWN ON THE PLANS AND AS DIRECTED BY THE ENGINEER. EXCEPT FOR CASES OF DAMAGE BY THE CONTRACTOR OR THAT CAUSE BY HIS OPERATIONS. ALL WORK REQUIRED FOR REPAIR AND/OR REPLACEMENT OF DAMAGED VEHICLE IMPACT ATTENTUATOR BARRELS WILL BE PAID FOR AT THE UNIT PRICE BID FOR "VEHICULAR IMPACT ATTENTUATOR ASSEMBLY BARRELS."

8 THE CONTRACTOR SHALL DURING ALL PHASES OF CONSTRUCTION MAINTAIN ACCESS TO PROPERTY FOR ALL ADJACENT LANDOWNERS.

9 SIGNS RESPECTIVE LOCATION ARE APPROXIMATE ONLY, AND SHALL BE INSTALLED IN ACCORDANCE WITH THE TMUTCD AND TRAFFIC STANDARD SHEETS.

10 CONTRACTOR SHALL MAINTAIN EXISTING SIGNS UNTIL CONSTRUCTION PROGRESSES AND TRAFFIC ROUTING CHANGES, SUCH THAT THEY ARE NO LONGER NEEDED. CONTRACTOR SHALL SALVAGE AND RELOCATE EXISTING SIGNS WHICH WILL STILL BE APPLICABLE TO SHIFTED TRAFFIC.

11 THE CONTRACTOR SHALL INSTALL FINAL SIGNS IN ACCORDANCE WITH THE SIGNING LAYOUT WHERE TRAFFIC IS TO BE ROUTED ON SECTIONS OF NEW ROADWAY OR PROVIDE TEMPORARY SIGNING ACCORDINGLY.

12. THE CONTRACTOR MAY, WITH THE APPROVAL OF AND AS DIRECTED BY THE ENGINEER, BE REQUIRED TO VARY THE NUMBER AND LOCATION OF SIGNS AND BARRICADES FROM INDICATED ON THE PLANS. IN ORDER TO MAINTAIN A SAFE AND UNINTERRUPTED FLOW OF TRAFFIC PARTICULARLY IN THOSE AREAS OF IMMEDIATE WORK.

STATE OF TEXAS
BRENT L. CHRISTIAN
73921
REGISTERED
PROFESSIONAL ENGINEER

Brent L. Christian
5/8/97

NO.	DATE	REVISION	APPROV.

Texas Department of Transportation
LOOP 1604

SCHEDULE OF BARRICADES
/ SEQUENCE OF WORK
SUMMARY

SHEET 1 OF 2

Kimley-Horn and Associates, Inc.

Designed	REK	DIST	FED REG	FEDERAL AID PROJECT •				HIGHWAY
Checked	BLC	15	6					LP1604
Drawn	PKG	COUNTY			CONTROL	SECT	JOB	SHEET
Checked	BLC	BEXAR			2452	01	035	62

LEVELS DISPLAYED

H:\DRAWINGS\67316O3\TCP\604TC_SOFB2.DGN

SCHEDULE OF BARRICADES SUMMARY

PHASE	REF. SHEET NO.	LAYOUT SHEET NO.	LIMITS	WORK ZONE PAVE MRKGS (NON REMOVABLE)			WORK ZONE PAV MRKGS (REMOVABLE)								VIA'S			PCTB			ELIM EXT PAV MRK & MRKR	RAIS PAV MRKR CL B (REFL) TY IICR	CONST DETOUR (CL 3)
				WHITE (SLD)	WHITE (BRK)	YELLOW (SLD)	YELLOW (DBL) (SLD)	YELLOW (SLD)	WHITE (SLD)	WHITE (SLD)	WHITE (SLD)	* WHITE TEMP. TABS	WHITE (BRK)	YELLOW (SLD)	PLACE	MOVE & RESET	REMOVE	FURN & INSTALL	MOVE & RESET	REMOVE			
				100mm	100mm	100mm	300mm	300mm	200mm	600mm	100mm	EA	100mm	100mm	EA	EA	EA	M	M	M	100mm	EA	m2
1	66	1	9+764 - 9+960												28			282.1					807.7
1	67	2	9+960 - 10+320								357			190	28			282.1			100		
1	68	3	9+960 - 10+320								430			73							215		
1	69	4	10+320 - 10+680															54.6					
1	70	5	10+680 - 11+040																				
1	71	6	11+040 - 11+400								112				14			127.4			112		
1	72	7	11+400 - 11+760								477			356	42		28	218.4		109.2	425		339.6
1	73	8	11+760 - 12+120																				1227.7
1	74	9	12+120 - 12+480																				
1	75	10	12+480 - 12+840																				
1	76	11	12+840 - 13+200																				
1	77	12	13+200 - 13+560								155			98									242.5
1	78	13	13+200 - 13+560								152			108									400
1	79	14	13+560 - 13+920																				
1	80	15	13+920 - 14+280								70							154.7		154.7	70		
1	81	16	14+280 - 14+500								255				14		14	245.7		245.7	255		
2	83	1	9+764 - 9+960	535		335										14	14		136.5	136.5	100		
2	84	2	9+960 - 10+320	360	360	360													72.8	72.8		29	
2	85	3	10+320 - 10+680	360	360	360										14	14		127.4	127.4		29	
2	86	4	10+680 - 11+040								235		133									11	
2	87	5	11+040 - 11+400																81.9	81.9			
2	88	6	11+400 - 11+760	230	190	195										14	14		236.6	236.6	185	17	
2	89	7	11+760 - 12+120	723		782					100			116		14	14		9.1	9.1	100		
2	90	8	11+760 - 12+120								135			130									
2	91	9	12+120 - 12+480	725		725																	
2	92	10	12+480 - 12+840	721		721																	
2	93	11	12+840 - 13+200	720		720																	
2	94	12	13+200 - 13+560	646		682																	
2	95	13	13+560 - 13+920	720		720																	
2	96	14	13+920 - 14+280	720		720										14	14		81.9	81.9			
2	97	15	14+280 - 14+640	440		440										14	14		236.6	236.6	340		
BRAUN	98	1	0+036.4 - 0+268.40																				1423.4
BRAUN	99	2	0+036.4 - 0+268.40					1030	130	14.5	705				112		56	809.9		9.1			867.2
BRAUN	100	3	0+036.4 - 0+268.40					1253	138	15	993.4					56	56		673.4	673.4			
BRAUN	101	4	0+036.4 - 0+268.40																				
BRAUN	102	5	0+036.4 - 0+268.40					349	54	20.5	365												
			PROJECT TOTALS	6900	910	6760	0	2632	322	50	4541.4	1000	133	1071	238	140	238	2174.9	1656.2	2174.9	1902	86	5308.1

*NOTE: TEMPORARY FLEXIBLE- REFLECTIVE ROADWAY MARKER TABS MAY BE USED BY THE CONTRACTOR AS NECESSARY AT VARIOUS LOCATIONS.

H:\DRAWINGS\673160 3\TCP\604TCP_SOFB.DGN

LEVELS DISPLAYED
1 2 3 4 5 6 7 8 9 10 11 12 13 14 15 16
17 18 19 20 21 22 23 24 25 26 27 28 29 30 31 32
33 34 35 36 37 38 39 40 41 42 43 44 45 46 47 48
49 50 51 52 53 54 55 56 57 58 59 60 61 62 63

NO.	DATE	REVISION	APPROV.

Texas Department of Transportation
LOOP 1604

SCHEDULE OF BARRICADES / SEQUENCE OF WORK SUMMARY

SHEET 2 OF 2

STATE OF TEXAS
BRENT L. CHRISTIAN
73921
REGISTERED PROFESSIONAL ENGINEER

Brent L. Christian

Kimley-Horn and Associates, Inc.

Designed	REK	DIST	FED REG	FEDERAL AID PROJECT		HIGHWAY
Checked	BLC	15	6			LP1604
Drawn	PKG	COUNTY		CONTROL	SECT	JOB	SHEET
Checked	BLC	BEXAR		2452	01	035	63

TEMPORARY CONSTRUCTION DETOUR
NORTH OF BRAUN ROAD
DETOUR "A"

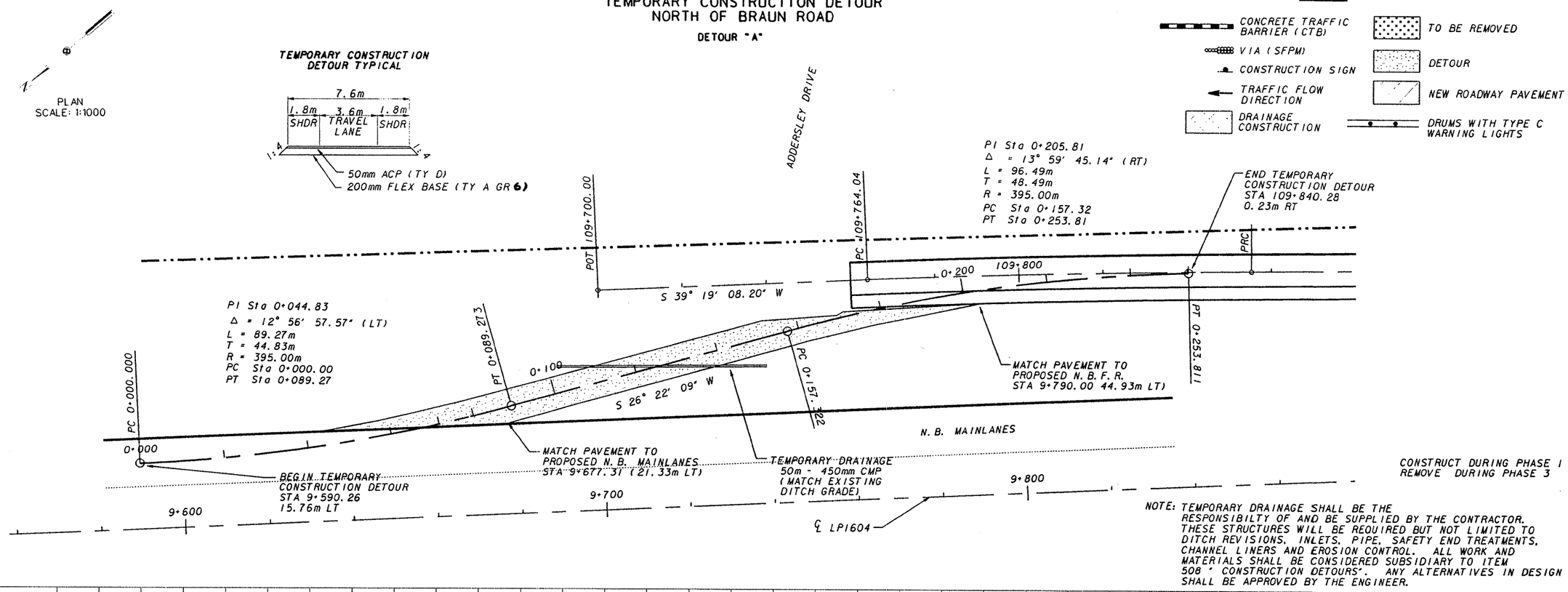

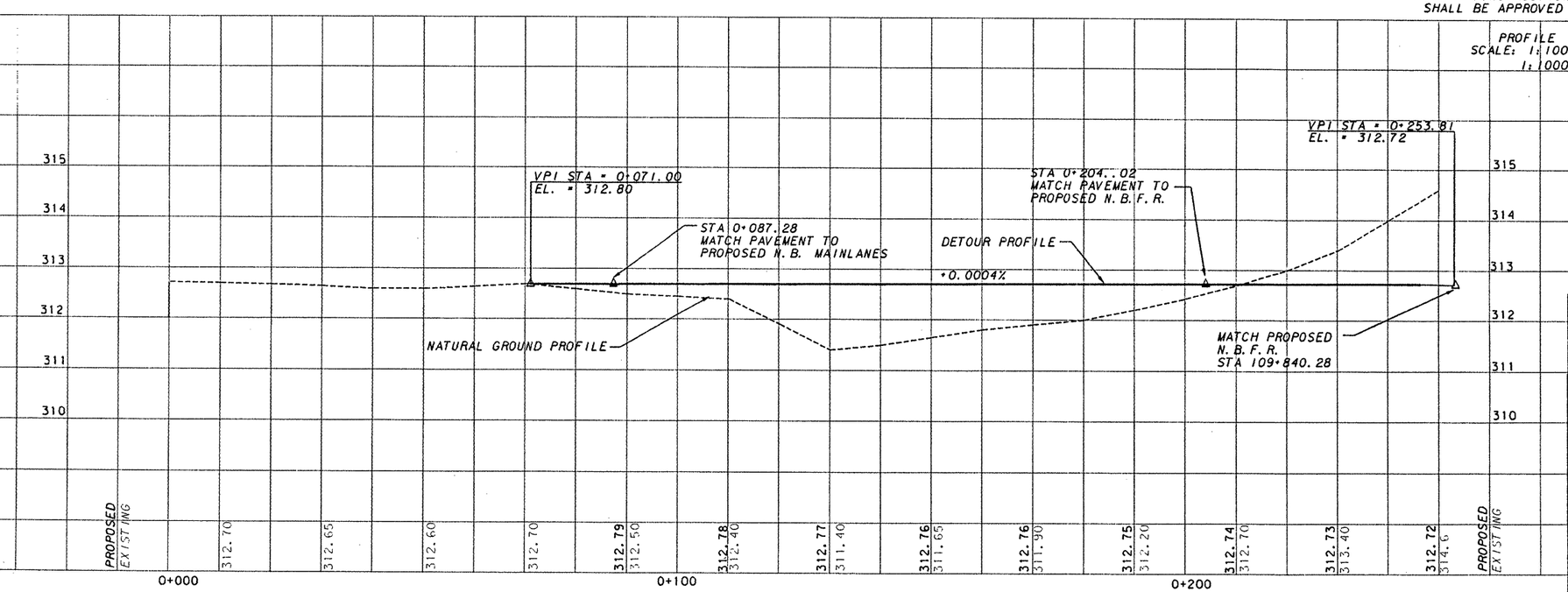

STATE OF TEXAS
BRENT L. CHRISTIAN
73921
REGISTERED PROFESSIONAL ENGINEER

Brent L. Christian
5/5/97

NO.	DATE	REVISION	APPROV.

Texas Department of Transportation
LOOP 1604

TEMPORARY CONSTRUCTION DETOUR
DETOUR A

SHEET 1 OF 2

Kimley-Horn and Associates, Inc.

Designed	DIST	FED REG	FEDERAL AID PROJECT •			HIGHWAY
Checked	15	6				LP1604
Drawn	COUNTY		CONTROL	SECT	JOB	SHEET
Checked	BEXAR		2452	01	035	64

H:\DRAWINGS\67316031\TCP\TCP_DETR1.DGN

TEMPORARY CONSTRUCTION DETOUR
SOUTH OF BRAUN ROAD
DETOUR "G"

PLAN
SCALE: 1:1000

LEGEND

- CONCRETE TRAFFIC BARRIER (CTB)
- VIA (SFPM)
- CONSTRUCTION SIGN
- TRAFFIC FLOW DIRECTION
- DRAINAGE CONSTRUCTION
- TO BE REMOVED
- DETOUR
- NEW ROADWAY PAVEMENT
- DRUMS WITH TYPE C WARNING LIGHTS

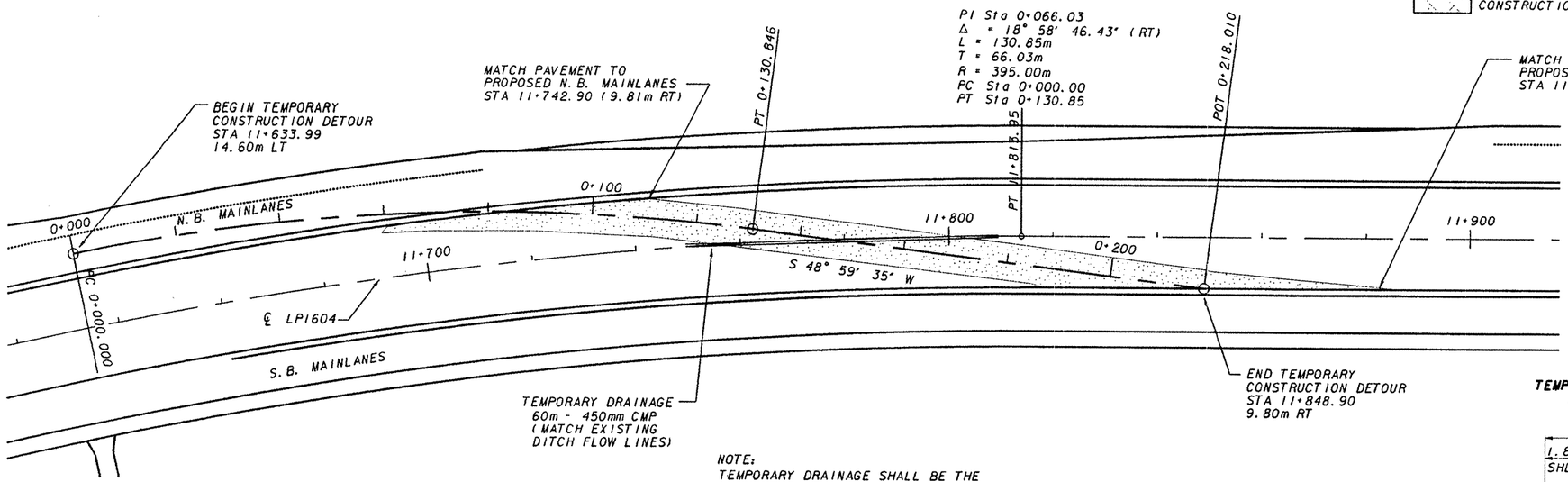

NOTE:
TEMPORARY DRAINAGE SHALL BE THE RESPONSIBILTY OF AND BE SUPPLIED BY THE CONTRACTOR. THESE STRUCTURES WILL BE REQUIRED BUT NOT LIMITED TO DITCH REVISIONS, INLETS, PIPE, SAFETY END TREATMENTS, CHANNEL LINERS AND EROSION CONTROL. ALL WORK AND MATERIALS SHALL BE CONSIDERED SUBSIDIARY TO ITEM 508 " CONSTRUCTION DETOURS". ANY ALTERNATIVES IN DESIGN SHALL BE APPROVED BY THE ENGINEER.

TEMPORARY CONSTRUCTION DETOUR TYPICAL

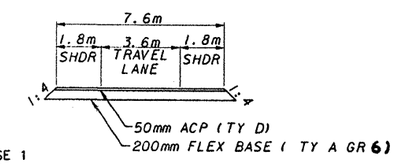

CONSTRUCT PHASE 1
REMOVE PHASE 3

PROFILE
SCALE: 1:100 V
1:1000 H

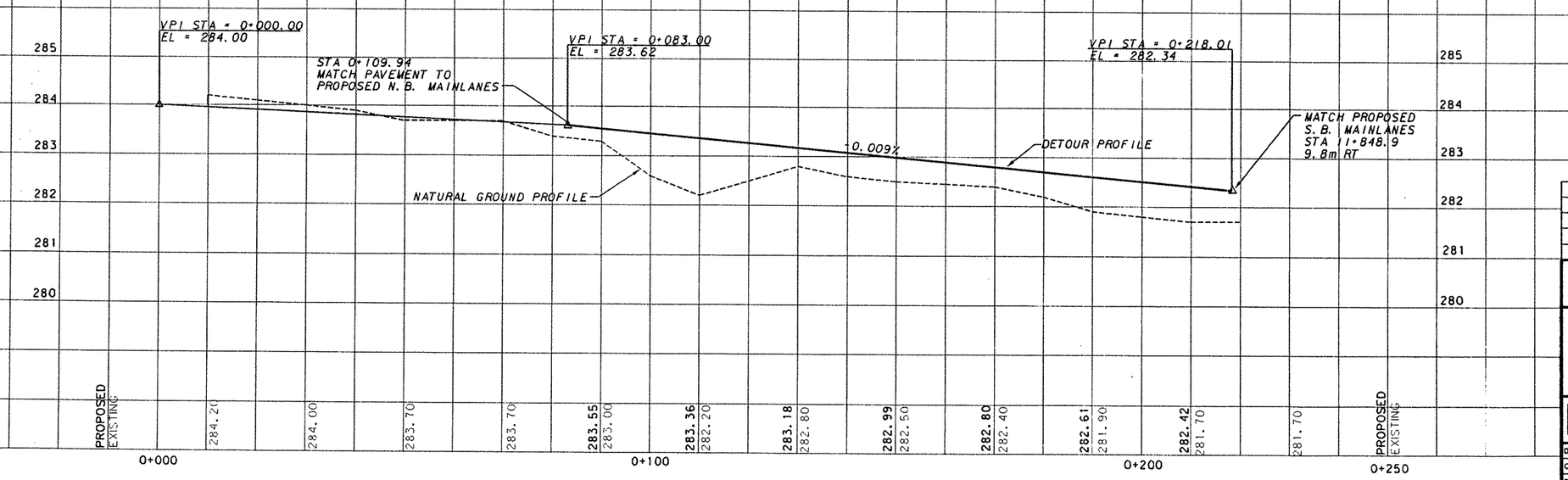

STATE OF TEXAS
BRENT L. CHRISTIAN
73921
REGISTERED PROFESSIONAL ENGINEER
5/5/97

NO.	DATE	REVISION	APPROV.

Texas Department of Transportation
LOOP 1604

TEMPORARY CONSTRUCTION DETOUR
DETOUR G

SHEET 2 OF 2

Kimley-Horn and Associates, Inc.

Designed	DIST	FED REG	FEDERAL AID PROJECT			HIGHWAY
Checked	15	6				LP1604
Drawn	COUNTY		CONTROL	SECT	JOB	SHEET
Checked	BEXAR		2452	01	035	65

H:\DRAWINGS\673160 3\TCP\TCP DETR.DGN

TEMPORARY CONSTRUCTION DETOUR
SOUTH OF BRAUN ROAD
DETOUR "G"

LEGEND

- CONCRETE TRAFFIC BARRIER (CTB)
- VIA (SFPM)
- CONSTRUCTION SIGN
- TRAFFIC FLOW DIRECTION
- DRAINAGE CONSTRUCTION
- TO BE REMOVED
- DETOUR
- NEW ROADWAY PAVEMENT
- DRUMS WITH TYPE C WARNING LIGHTS

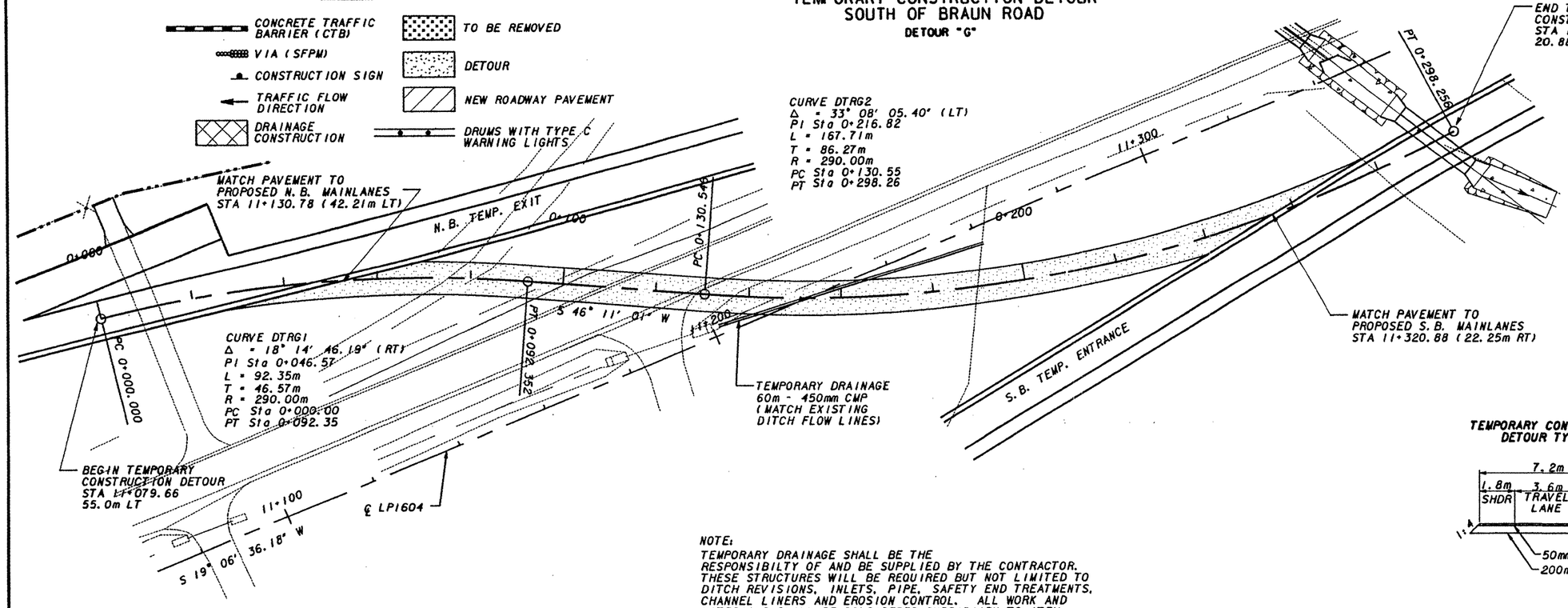

TEMPORARY CONSTRUCTION DETOUR TYPICAL

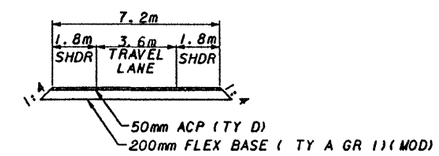

NOTE:
TEMPORARY DRAINAGE SHALL BE THE RESPONSIBILTY OF AND BE SUPPLIED BY THE CONTRACTOR. THESE STRUCTURES WILL BE REQUIRED BUT NOT LIMITED TO DITCH REVISIONS, INLETS, PIPE, SAFETY END TREATMENTS, CHANNEL LINERS AND EROSION CONTROL. ALL WORK AND MATERIALS SHALL BE CONSIDERED SUBSIDIARY TO ITEM 508 " CONSTRUCTION DETOURS". ANY ALTERNATIVES IN DESIGN SHALL BE APPROVED BY THE ENGINEER.

CONSTRUCT PHASE 1
REMOVE PHASE 3

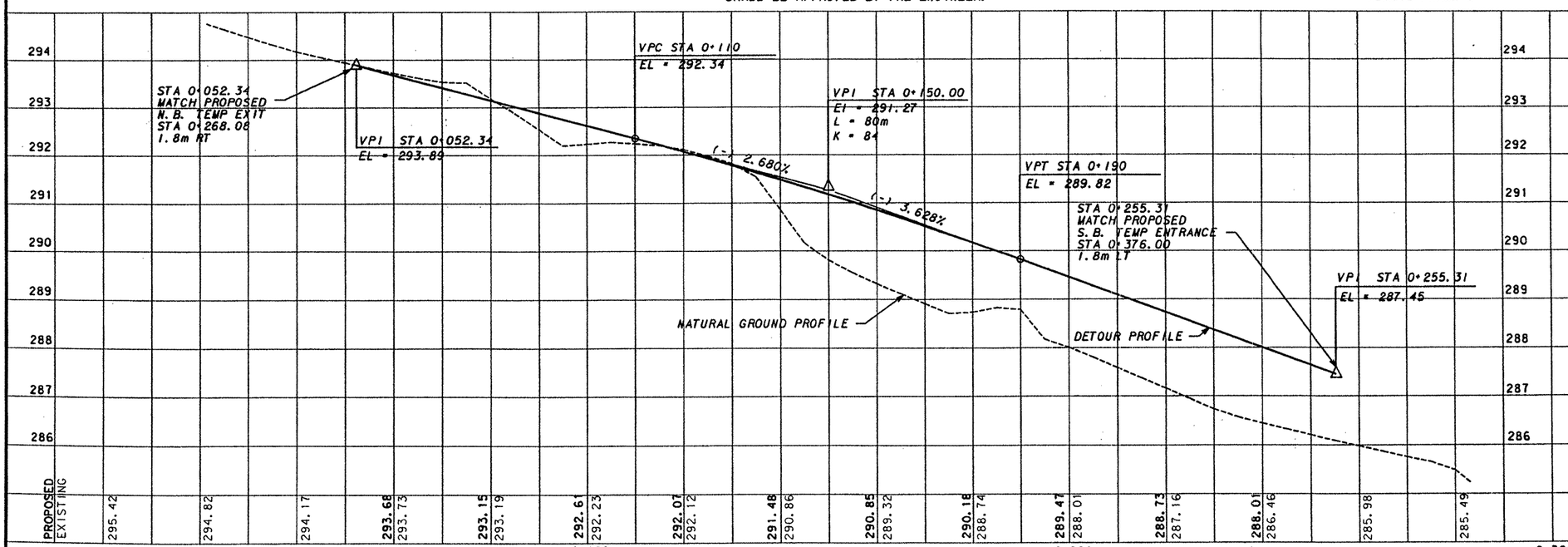

STATE OF TEXAS
BRENT L. CHRISTIAN
73921
REGISTERED PROFESSIONAL ENGINEER
Brent L. Christian 5-14-98

NO.	DATE	REVISION	APPROV.

Texas Department of Transportation
LOOP 1604

TEMPORARY CONSTRUCTION DETOUR
DETOUR G

SHEET 2 OF 2

Kimley-Horn and Associates, Inc.

Designed	DIST	FED REG	FEDERAL AID PROJECT #	HIGHWAY
Checked	15	6	OD 2452-1-35	LP1604
Drawn	COUNTY		CONTROL / SECT / JOB	SHEET
Checked	BEXAR		2452 / 01 / 035	65

CO#6

A

LEGEND

- CONCRETE TRAFFIC BARRIER (CTB)
- VIA (SFPM)
- CONSTRUCTION SIGN
- TRAFFIC FLOW DIRECTION
- DRAINAGE CONSTRUCTION
- (X) SEE SCHEDULE OF BARRICADES
- TO BE REMOVED
- DETOUR
- NEW ROADWAY PAVEMENT
- DRUMS WITH TYPE C WARNING LIGHTS

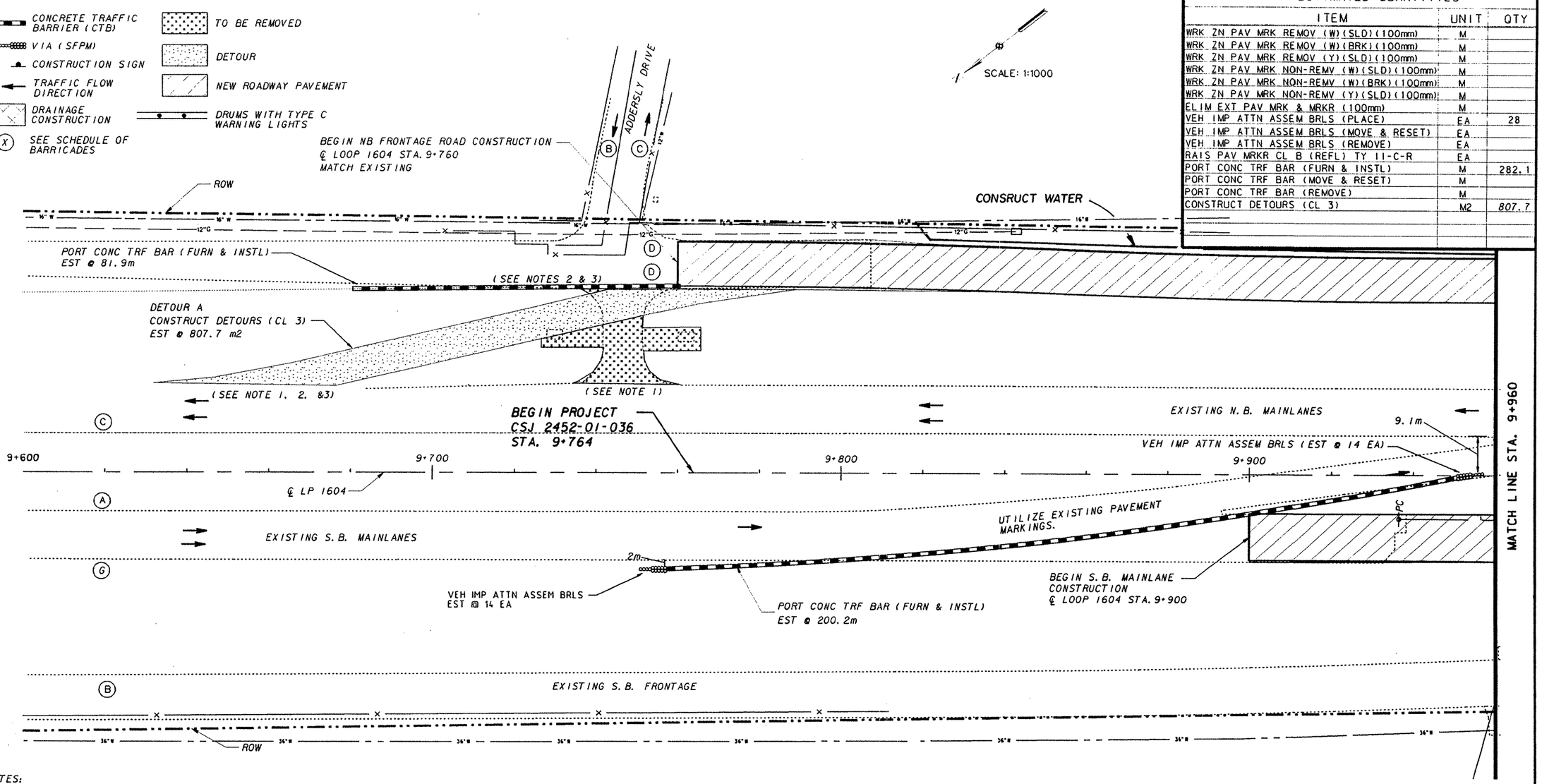

ESTIMATED QUANTITIES

ITEM	UNIT	QTY
WRK ZN PAV MRK REMOV (W)(SLD)(100mm)	M	
WRK ZN PAV MRK REMOV (W)(BRK)(100mm)	M	
WRK ZN PAV MRK REMOV (Y)(SLD)(100mm)	M	
WRK ZN PAV MRK NON-REMV (W)(SLD)(100mm)	M	
WRK ZN PAV MRK NON-REMV (W)(BRK)(100mm)	M	
WRK ZN PAV MRK NON-REMV (Y)(SLD)(100mm)	M	
ELIM EXT PAV MRK & MRKR (100mm)	M	
VEH IMP ATTN ASSEM BRLS (PLACE)	EA	28
VEH IMP ATTN ASSEM BRLS (MOVE & RESET)	EA	
VEH IMP ATTN ASSEM BRLS (REMOVE)	EA	
RAIS PAV MRKR CL B (REFL) TY II-C-R	EA	
PORT CONC TRF BAR (FURN & INSTL)	M	282.1
PORT CONC TRF BAR (MOVE & RESET)	M	
PORT CONC TRF BAR (REMOVE)	M	
CONSTRUCT DETOURS (CL 3)	M2	807.7

NOTES:

1. THE CONTRACTOR SHALL USE TEMPORARY LANE CLOSURE DETAIL TCP(2-1) FOR REMOVAL/CONSTRUCTION.
2. THE CONTRACTOR SHALL UTILIZE EXISTING PAVEMENT MARKINGS UNLESS OTHERWISE NOTED.
3. CONTRACTOR SHALL UTILIZE FLAGGER CONTROL AND APPROPRIATE ADVANCE SIGNING WHEN TIEING INTO EXISTING PAVEMENT WITH TEMPORARY PAVEMENT.
4. ALL DRUMS, BARRICADES, WARNING LIGHTS, AND CONSTRUCTION SIGNING ARE TO BE PROVIDED BY THE CONTRACTOR AND ARE SUBSIDIARY TO ITEM 502.
5. SEE SHEET 64 FOR DETOUR A PLAN AND PROFILE.
6. THE CONTRACTOR SHALL USE BLACK BASE ON ALL DETOURS AND AT BRAUN ROAD, NEW GUILBEAU, BOWENS CROSSING, AND SHAENFIELD INTERSECTIONS. SEE INTERSECTION LAYOUTS FOR LIMITS OF BLACK BASE. ASPHALT SHALL BE PLACED BETWEEN BLACK BASE AND TOP OF EXISTING PAVEMENT AT 3:1 SLOPE. ASPHALT SLOPE SHALL BE USED BETWEEN PLACEMENT OF EACH LIFT OF BLACK BASE IF BOTH LIFTS CANNOT BE COMPLETED IN ONE (1) DAY. SLOPE SHALL BE REMOVED PRIOR TO PLACEMENT OF SECOND LIFT.

H:\DRAWINGS\6731603\TCP\604TPC01.DGN

NO.	DATE	REVISION	APPROV.

Texas Department of Transportation
LOOP 1604

SEQUENCE OF WORK
PHASE 1
BEGIN PROJECT TO STA. 9+960

SHEET 1 OF 16

STATE OF TEXAS
BRENT L. CHRISTIAN
73921
REGISTERED PROFESSIONAL ENGINEER

Brent L. Christian
5/5/97

Kimley-Horn and Associates, Inc.

Designed	REK	DIST	FED REG	FEDERAL AID PROJECT				HIGHWAY
Checked	BLC	15	6					LP1604
Drawn	REK	COUNTY		CONTROL	SECT	JOB		SHEET
Checked	BLC	BEXAR		2452	01	035		66

LEGEND

- CONCRETE TRAFFIC BARRIER (CTB)
- VIA (SFPM)
- CONSTRUCTION SIGN
- TRAFFIC FLOW DIRECTION
- DRAINAGE CONSTRUCTION
- (X) SEE SCHEDULE OF BARRICADES
- TO BE REMOVED
- DETOUR
- NEW ROADWAY PAVEMENT
- DRUMS WITH TYPE C WARNING LIGHTS

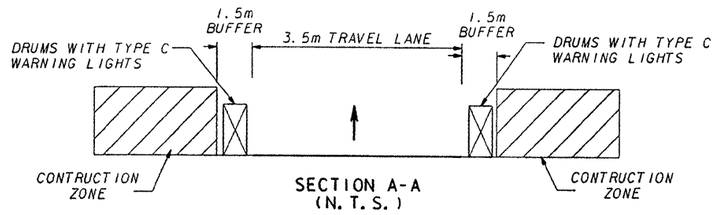

SECTION A-A
(N. T. S.)

SCALE: 1:1000

ESTIMATED QUANTITIES

ITEM	UNIT	QTY
WRK ZN PAV MRK REMOV (W)(SLD)(100mm)	M	357
WRK ZN PAV MRK REMOV (W)(BRK)(100mm)	M	
WRK ZN PAV MRK REMOV (Y)(SLD)(100mm)	M	190
WRK ZN PAV MRK NON-REMV (W)(SLD)(100mm)	M	
WRK ZN PAV MRK NON-REMV (W)(BRK)(100mm)	M	
WRK ZN PAV MRK NON-REMV (Y)(SLD)(100mm)	M	
ELIM EXT PAV MRK & MRKR (100mm)	M	100
VEH IMP ATTN ASSEM BRLS (PLACE)	EA	28
VEH IMP ATTN ASSEM BRLS (MOVE & RESET)	EA	
VEH IMP ATTN ASSEM BRLS (REMOVE)	EA	
RAIS PAV MRKR CL B (REFL) TY II-C-R	EA	
PORT CONC TRF BAR (FURN & INSTL)	M	282.1
PORT CONC TRF BAR (MOVE & RESET)	M	
PORT CONC TRF BAR (REMOVE)	M	
CONSTRUCT DETOURS (CL 3)	M2	

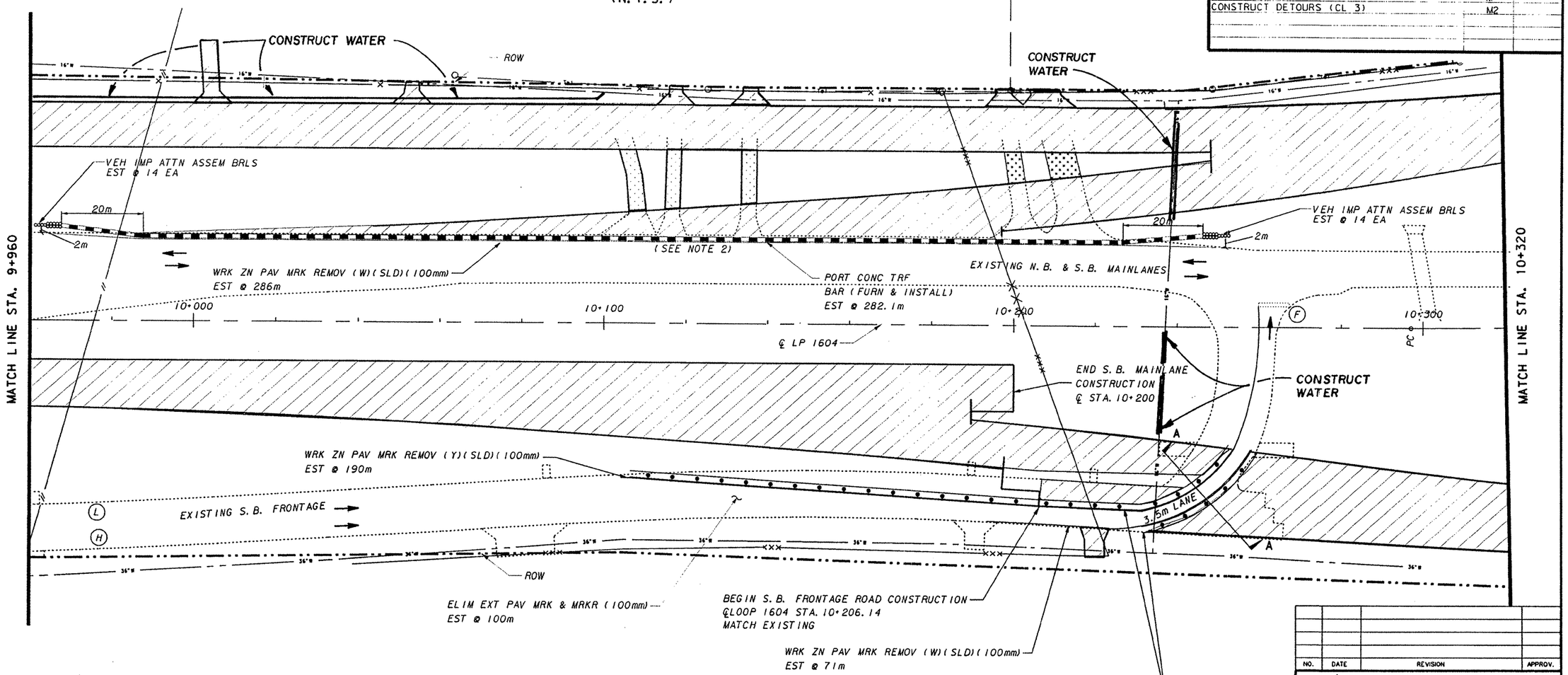

NOTES:

1. THE CONTRACTOR SHALL USE TEMPORARY LANE CLOSURE DETAIL TCP(2-1) FOR REMOVAL/CONSTRUCTION.
2. THE CONTRACTOR SHALL UTILIZE EXISTING PAVEMENT MARKINGS UNLESS OTHERWISE NOTED.
3. CONTRACTOR SHALL UTILIZE FLAGGER CONTROL AND APPROPRIATE ADVANCE SIGNING WHEN TIEING INTO EXISTING PAVEMENT WITH TEMPORARY PAVEMENT.
4. ALL DRUMS, BARRICADES, WARNING LIGHTS, AND CONSTRUCTION SIGNING ARE TO BE PROVIDED BY THE CONTRACTOR AND ARE SUBSIDIARY TO ITEM 502.
5. THE CONTRACTOR SHALL USE BLACK BASE ON ALL DETOURS AND AT BRAUN ROAD, NEW GUILBEAU, BOWENS CROSSING, AND SHAENFIELD INTERSECTIONS. SEE INTERSECTION LAYOUTS FOR LIMITS OF BLACK BASE. ASPHALT SHALL BE PLACED BETWEEN BLACK BASE AND TOP OF EXISTING PAVEMENT AT 3:1 SLOPE. ASPHALT SLOPE SHALL BE USED BETWEEN PLACEMENT OF EACH LIFT OF BLACK BASE IF BOTH LIFTS CANNOT BE COMPLETED IN ONE (1) DAY. SLOPE SHALL BE REMOVED PRIOR TO PLACEMENT OF SECOND LIFT.

STATE OF TEXAS
BRENT L. CHRISTIAN
73921
REGISTERED PROFESSIONAL ENGINEER
Brent L. Christian
5/5/97

NO.	DATE	REVISION	APPROV.

Texas Department of Transportation
LOOP 1604

SEQUENCE OF WORK
S.B. FRONTAGE ROAD PHASE 1 - STEP 1
STA. 9+960 TO STA. 10+320
SHEET 2 OF 16

Kimley-Horn and Associates, Inc.

Designed	REK	DIST	FED REG	FEDERAL AID PROJECT				HIGHWAY
Checked	BLC	15	6					LP1604
Drawn	REK	COUNTY			CONTROL	SECT	JOB	SHEET
Checked	BLC	BEXAR			2452	01	035	67

LEVELS DISPLAYED
1 2 3 4 5 6 7 8 9 10 11 12 13 14 15 16
17 18 19 20 21 22 23 24 25 26 27 28 29 30 31 32
33 34 35 36 37 38 39 40 41 42 43 44 45 46 47 48
49 50 51 52 53 54 55 56 57 58 59 60 61 62 63

H:\DRAWINGS\6731603\TCP\604TP C02.DGN

LEGEND

- CONCRETE TRAFFIC BARRIER (CTB)
- VIA (SFPM)
- CONSTRUCTION SIGN
- TRAFFIC FLOW DIRECTION
- DRAINAGE CONSTRUCTION
- (X) SEE SCHEDULE OF BARRICADES
- TO BE REMOVED
- DETOUR
- NEW ROADWAY PAVEMENT
- DRUMS WITH TYPE C WARNING LIGHTS

NOTES:

1. THE CONTRACTOR SHALL USE TEMPORARY LANE CLOSURE DETAIL TCP(2-1) FOR REMOVAL/CONSTRUCTION.
2. THE CONTRACTOR SHALL UTILIZE EXISTING PAVEMENT MARKINGS UNLESS OTHERWISE NOTED.
3. CONTRACTOR SHALL UTILIZE FLAGGER CONTROL AND APPROPRIATE ADVANCE SIGNING WHEN TIEING INTO EXISTING PAVEMENT WITH TEMPORARY PAVEMENT.
4. ALL DRUMS, BARRICADES, WARNING LIGHTS, AND CONSTRUCTION SIGNING ARE TO BE PROVIDED BY THE CONTRACTOR AND ARE SUBSIDIARY TO ITEM 502.
6. THE CONTRACTOR SHALL USE BLACK BASE ON ALL DETOURS AND AT BRAUN ROAD, NEW GUILBEAU, BOWENS CROSSING, AND SHAENFIELD INTERSECTIONS. SEE INTERSECTION LAYOUTS FOR LIMITS OF BLACK BASE. ASPHALT SHALL BE PLACED BETWEEN BLACK BASE AND TOP OF EXISTING PAVEMENT AT 3:1 SLOPE. ASPHALT SLOPE SHALL BE USED BETWEEN PLACEMENT OF EACH LIFT OF BLACK BASE IF BOTH LIFTS CANNOT BE COMPLETED IN ONE (1) DAY. SLOPE SHALL BE REMOVED PRIOR TO PLACEMENT OF SECOND LIFT.

SCALE: 1:1000

ESTIMATED QUANTITIES

ITEM	UNIT	QTY
WRK ZN PAV MRK REMOV (W)(SLD)(100mm)	M	430
WRK ZN PAV MRK REMOV (W)(BRK)(100mm)	M	
WRK ZN PAV MRK REMOV (Y)(SLD)(100mm)	M	73
WRK ZN PAV MRK NON-REMV (W)(SLD)(100mm)	M	
WRK ZN PAV MRK NON-REMV (W)(BRK)(100mm)	M	
WRK ZN PAV MRK NON-REMV (Y)(SLD)(100mm)	M	
ELIM EXT PAV MRK & MRKR (100mm)	M	215
VEH IMP ATTN ASSEM BRLS (PLACE)	EA	
VEH IMP ATTN ASSEM BRLS (MOVE & RESET)	EA	
VEH IMP ATTN ASSEM BRLS (REMOVE)	EA	
RAIS PAV MRKR CL B (REFL) TY II-C-R	EA	
PORT CONC TRF BAR (FURN & INSTL)	M	
PORT CONC TRF BAR (MOVE & RESET)	M	
PORT CONC TRF BAR (REMOVE)	M	
CONSTRUCT DETOURS (CL 3)	M2	

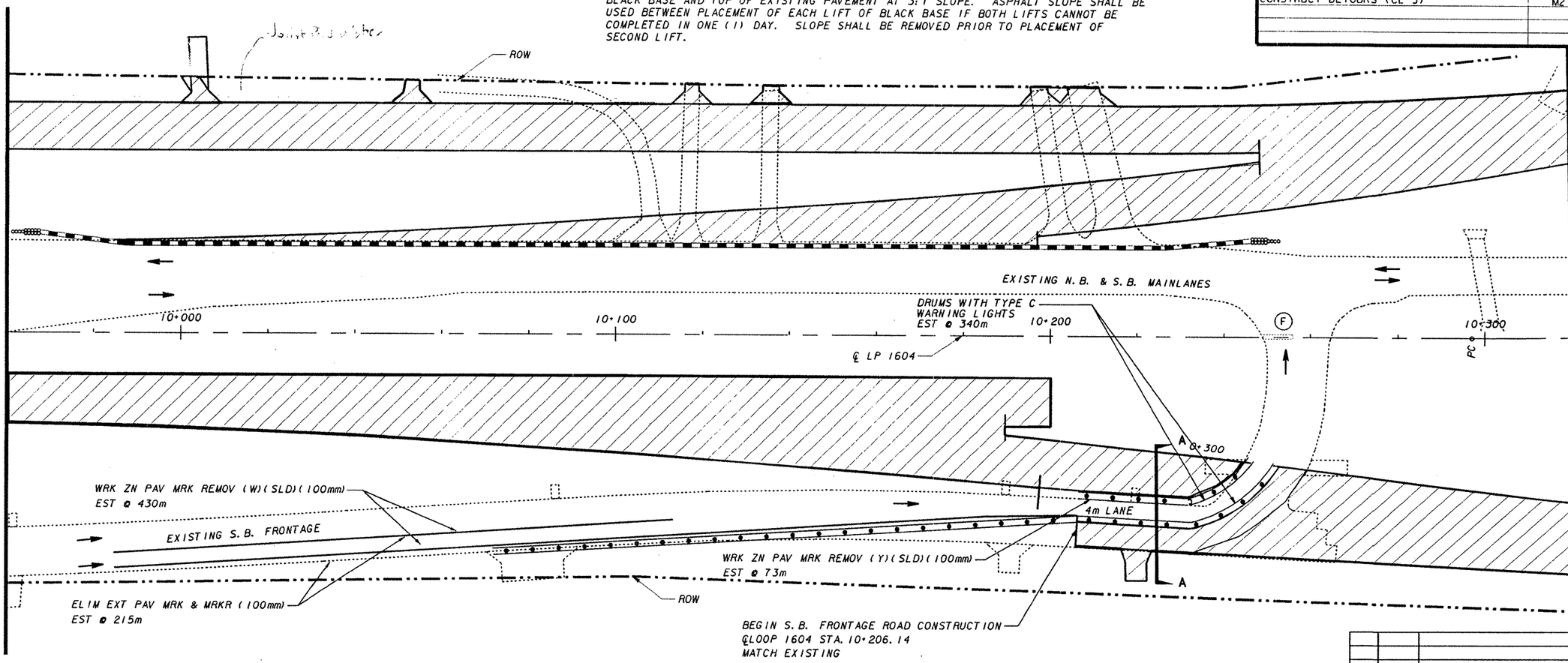

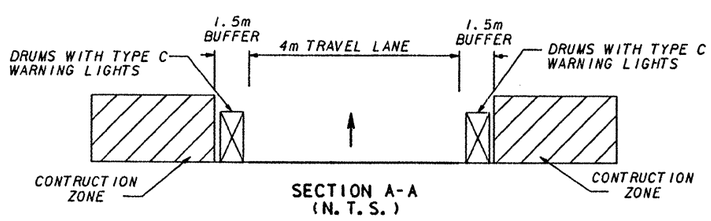

SECTION A-A
(N.T.S.)

NO.	DATE	REVISION	APPROV.

Texas Department of Transportation
LOOP 1604

SEQUENCE OF WORK
S.B. FRONTAGE ROAD PHASE 1 - STEP 2
STA. 9+960 TO 10+320
SHEET 3 OF 16

Kimley-Horn and Associates, Inc.

STATE OF TEXAS
BRENT L. CHRISTIAN
73921
REGISTERED PROFESSIONAL ENGINEER
Brent Christian
5/5/97

Designed	REK	DIST	FED REG	FEDERAL AID PROJECT				HIGHWAY
Checked	BLC	15	6					LP1604
Drawn	REK	COUNTY			CONTROL	SECT	JOB	SHEET
Checked	BLC	BEXAR			2452	01	035	68

LEVELS DISPLAYED
1 2 3 4 5 6 7 8 9 10 11 12 13 14 15 16
17 18 19 20 21 22 23 24 25 26 27 28 29 30 31 32
33 34 35 36 37 38 39 40 41 42 43 44 45 46 47 48
49 50 51 52 53 54 55 56 57 58 59 60 61 62 63

H:\DRAWINGS\67316031\TCP\604TPC2a.DGN

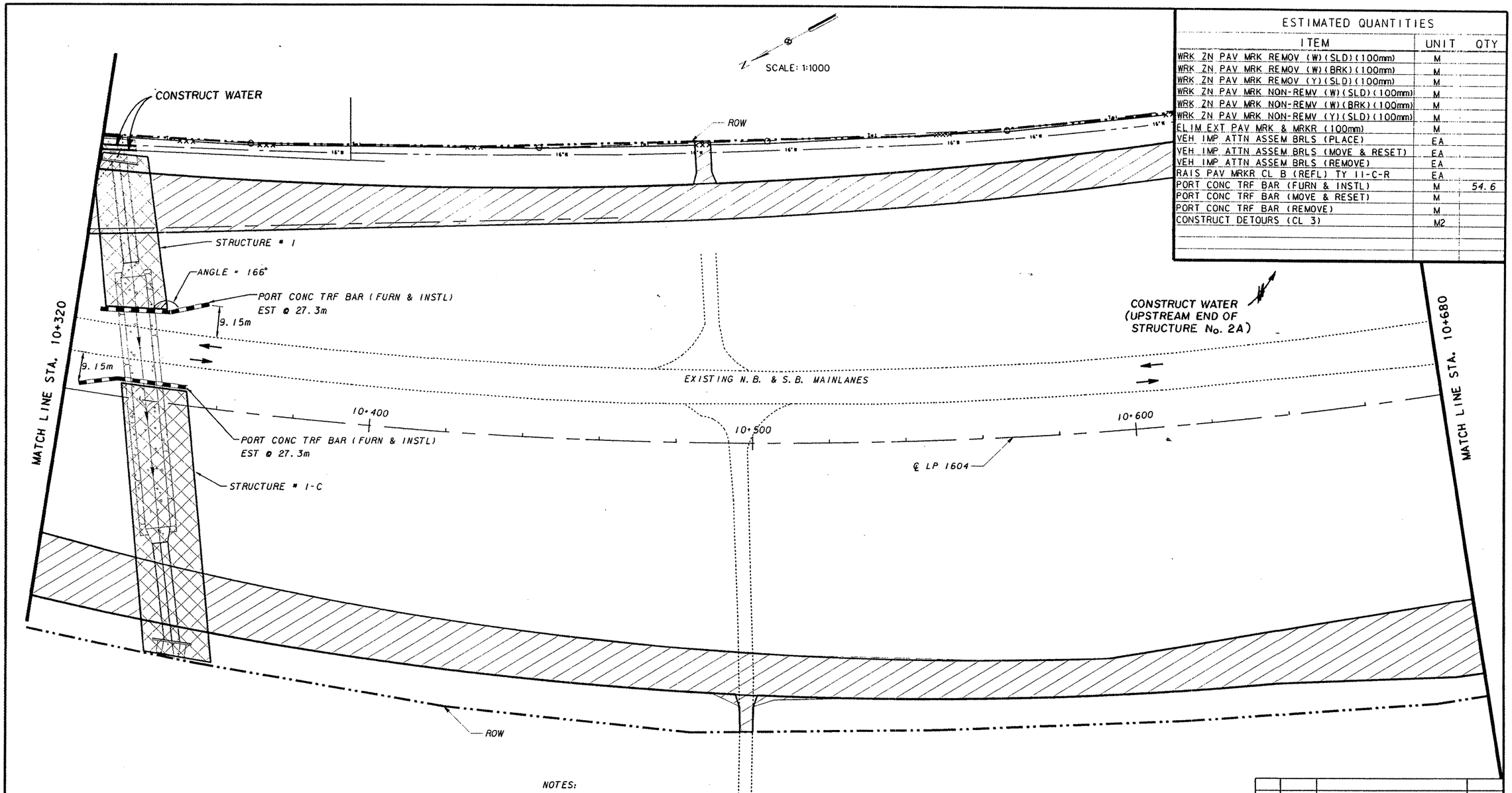

ESTIMATED QUANTITIES

ITEM	UNIT	QTY
WRK ZN PAV MRK REMOV (W)(SLD)(100mm)	M	
WRK ZN PAV MRK REMOV (W)(BRK)(100mm)	M	
WRK ZN PAV MRK REMOV (Y)(SLD)(100mm)	M	
WRK ZN PAV MRK NON-REMV (W)(SLD)(100mm)	M	
WRK ZN PAV MRK NON-REMV (W)(BRK)(100mm)	M	
WRK ZN PAV MRK NON-REMV (Y)(SLD)(100mm)	M	
ELIM EXT PAV MRK & MRKR (100mm)	M	
VEH IMP ATTN ASSEM BRLS (PLACE)	EA	
VEH IMP ATTN ASSEM BRLS (MOVE & RESET)	EA	
VEH IMP ATTN ASSEM BRLS (REMOVE)	EA	
RAIS PAV MRKR CL B (REFL) TY II-C-R	EA	
PORT CONC TRF BAR (FURN & INSTL)	M	54.6
PORT CONC TRF BAR (MOVE & RESET)	M	
PORT CONC TRF BAR (REMOVE)	M	
CONSTRUCT DETOURS (CL 3)	M2	

LEGEND

- CONCRETE TRAFFIC BARRIER (CTB)
- VIA (SFPM)
- CONSTRUCTION SIGN
- TRAFFIC FLOW DIRECTION
- DRAINAGE CONSTRUCTION
- (X) SEE SCHEDULE OF BARRICADES
- TO BE REMOVED
- DETOUR
- NEW ROADWAY PAVEMENT
- DRUMS WITH TYPE C WARNING LIGHTS

NOTES:

1. THE CONTRACTOR SHALL USE TEMPORARY LANE CLOSURE DETAIL TCP(2-1) FOR REMOVAL/CONSTRUCTION.
2. THE CONTRACTOR SHALL UTILIZE EXISTING PAVEMENT MARKINGS UNLESS OTHERWISE NOTED.
3. CONTRACTOR SHALL UTILIZE FLAGGER CONTROL AND APPROPRIATE ADVANCE SIGNING WHEN TIEING INTO EXISTING PAVEMENT WITH TEMPORARY PAVEMENT.
4. ALL DRUMS, BARRICADES, WARNING LIGHTS, AND CONSTRUCTION SIGNING ARE TO BE PROVIDED BY THE CONTRACTOR AND ARE SUBSIDIARY TO ITEM 502.
5. THE CONTRACTOR SHALL USE BLACK BASE ON ALL DETOURS AND AT BRAUN ROAD, NEW GUILBEAU, BOWENS CROSSING, AND SHAENFIELD INTERSECTIONS. SEE INTERSECTION LAYOUTS FOR LIMITS OF BLACK BASE. ASPHALT SHALL BE PLACED BETWEEN BLACK BASE AND TOP OF EXISTING PAVEMENT AT 3:1 SLOPE. ASPHALT SLOPE SHALL BE USED BETWEEN PLACEMENT OF EACH LIFT OF BLACK BASE IF BOTH LIFTS CANNOT BE COMPLETED IN ONE (1) DAY. SLOPE SHALL BE REMOVED PRIOR TO PLACEMENT OF SECOND LIFT.

STATE OF TEXAS
BRENT L. CHRISTIAN
73921
REGISTERED PROFESSIONAL ENGINEER

Brent L. Christian
5/5/97

NO.	DATE	REVISION	APPROV.

Texas Department of Transportation
LOOP 1604

SEQUENCE OF WORK
PHASE 1
STA. 10+320 TO 10+680

SHEET 4 OF 16

Kimley-Horn and Associates, Inc.

Designed	REK	DIST	FED REG	FEDERAL AID PROJECT #				HIGHWAY
Checked	BLC	15	6					LP1604
Drawn	REK	COUNTY		CONTROL	SECT	JOB		SHEET
Checked	BLC	BEXAR		2452	01	035		69

LEVELS DISPLAYED

1	2	3	4	5	6	7	8	9	10	11	12	13	14	15	16	17	18	19	20	21	22	23	24	25	26	27	28	29	30	31	32
33	34	35	36	37	38	39	40	41	42	43	44	45	46	47	48	49	50	51	52	53	54	55	56	57	58	59	60	61	62	63	

H:\DRAWINGS\673160 3\TCP\604TPC03.DGN

LEGEND

- CONCRETE TRAFFIC BARRIER (CTB)
- VIA (SFPM)
- CONSTRUCTION SIGN
- TRAFFIC FLOW DIRECTION
- DRAINAGE CONSTRUCTION
- (X) SEE SCHEDULE OF BARRICADES
- TO BE REMOVED
- DETOUR
- NEW ROADWAY PAVEMENT
- DRUMS WITH TYPE C WARNING LIGHTS

SCALE: 1:1000

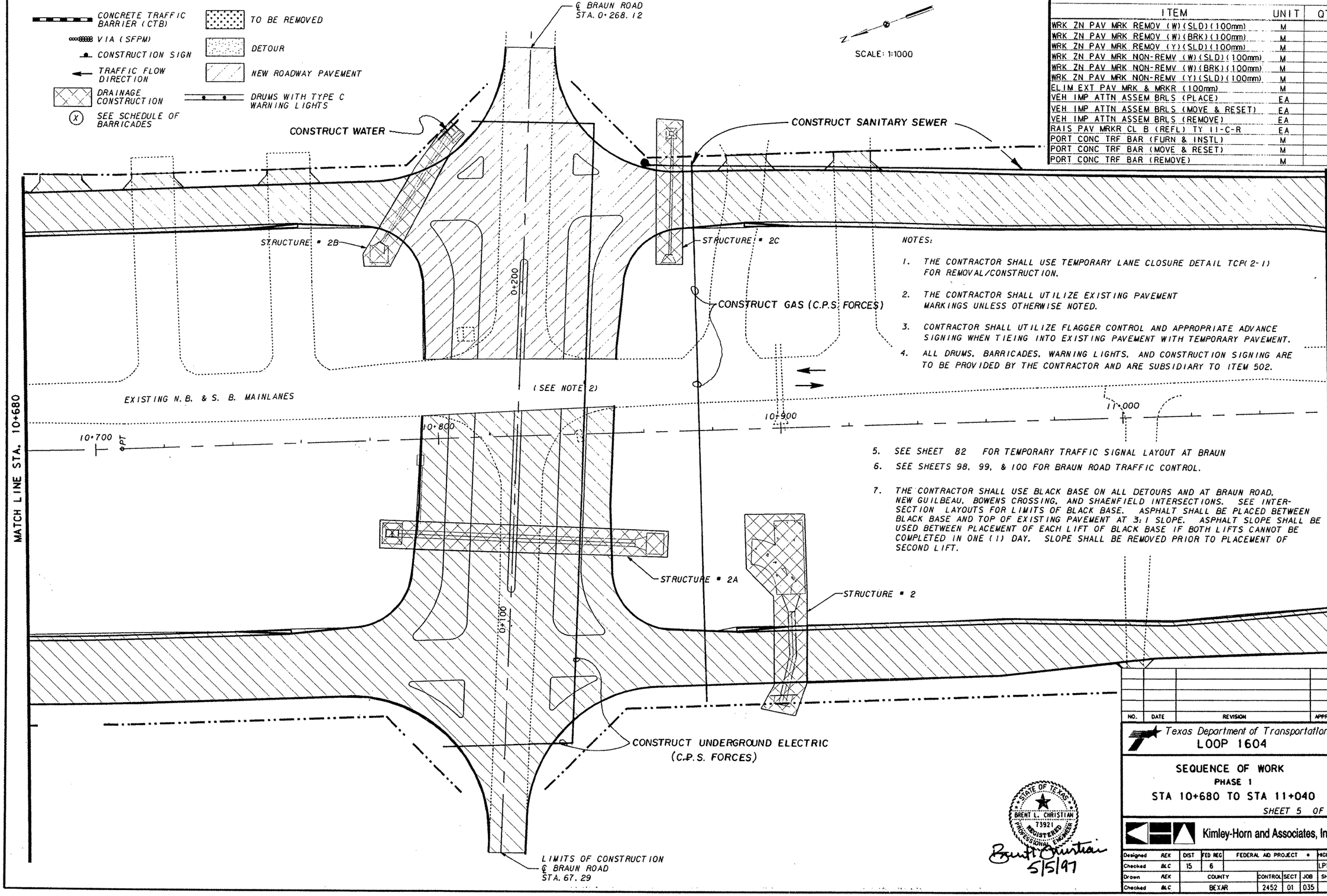

ESTIMATED QUANTITIES

ITEM	UNIT	QTY
WRK ZN PAV MRK REMOV (W)(SLD)(100mm)	M	
WRK ZN PAV MRK REMOV (W)(BRK)(100mm)	M	
WRK ZN PAV MRK REMOV (Y)(SLD)(100mm)	M	
WRK ZN PAV MRK NON-REMV (W)(SLD)(100mm)	M	
WRK ZN PAV MRK NON-REMV (W)(BRK)(100mm)	M	
WRK ZN PAV MRK NON-REMV (Y)(SLD)(100mm)	M	
ELIM EXT PAV MRK & MRKR (100mm)	M	
VEH IMP ATTN ASSEM BRLS (PLACE)	EA	
VEH IMP ATTN ASSEM BRLS (MOVE & RESET)	EA	
VEH IMP ATTN ASSEM BRLS (REMOVE)	EA	
RAIS PAV MRKR CL B (REFL) TY II-C-R	EA	
PORT CONC TRF BAR (FURN & INSTL)	M	
PORT CONC TRF BAR (MOVE & RESET)	M	
PORT CONC TRF BAR (REMOVE)	M	

NOTES:

1. THE CONTRACTOR SHALL USE TEMPORARY LANE CLOSURE DETAIL TCP(2-1) FOR REMOVAL/CONSTRUCTION.
2. THE CONTRACTOR SHALL UTILIZE EXISTING PAVEMENT MARKINGS UNLESS OTHERWISE NOTED.
3. CONTRACTOR SHALL UTILIZE FLAGGER CONTROL AND APPROPRIATE ADVANCE SIGNING WHEN TIEING INTO EXISTING PAVEMENT WITH TEMPORARY PAVEMENT.
4. ALL DRUMS, BARRICADES, WARNING LIGHTS, AND CONSTRUCTION SIGNING ARE TO BE PROVIDED BY THE CONTRACTOR AND ARE SUBSIDIARY TO ITEM 502.
5. SEE SHEET 82 FOR TEMPORARY TRAFFIC SIGNAL LAYOUT AT BRAUN
6. SEE SHEETS 98, 99, & 100 FOR BRAUN ROAD TRAFFIC CONTROL.
7. THE CONTRACTOR SHALL USE BLACK BASE ON ALL DETOURS AND AT BRAUN ROAD, NEW GUILBEAU, BOWENS CROSSING, AND SHAENFIELD INTERSECTIONS. SEE INTERSECTION LAYOUTS FOR LIMITS OF BLACK BASE. ASPHALT SHALL BE PLACED BETWEEN BLACK BASE AND TOP OF EXISTING PAVEMENT AT 3:1 SLOPE. ASPHALT SLOPE SHALL BE USED BETWEEN PLACEMENT OF EACH LIFT OF BLACK BASE IF BOTH LIFTS CANNOT BE COMPLETED IN ONE (1) DAY. SLOPE SHALL BE REMOVED PRIOR TO PLACEMENT OF SECOND LIFT.

STATE OF TEXAS
BRENT L. CHRISTIAN
73921
REGISTERED
PROFESSIONAL ENGINEER

Brent Christian
5/5/97

NO.	DATE	REVISION	APPROV.

Texas Department of Transportation
LOOP 1604

SEQUENCE OF WORK
PHASE 1
STA 10+680 TO STA 11+040

Kimley-Horn and Associates, Inc.

Designed	REK	DIST	FED REG	FEDERAL AID PROJECT				HIGHWAY
Checked	BLC	15	6					LP1604
Drawn	REK	COUNTY		CONTROL	SECT	JOB		SHEET
Checked	BLC	BEXAR		2452	01	035		70

LEGEND

- CONCRETE TRAFFIC BARRIER (CTB)
- VIA (SFPM)
- CONSTRUCTION SIGN
- TRAFFIC FLOW DIRECTION
- DRAINAGE CONSTRUCTION
- (X) SEE SCHEDULE OF BARRICADES
- TO BE REMOVED
- DETOUR
- NEW ROADWAY PAVEMENT
- DRUMS WITH TYPE C WARNING LIGHTS

SCALE: 1:1000

ESTIMATED QUANTITIES

ITEM	UNIT	QTY
WRK ZN PAV MRK REMOV (W)(SLD)(100mm)	M	112
WRK ZN PAV MRK REMOV (W)(BRK)(100mm)	M	
WRK ZN PAV MRK REMOV (Y)(SLD)(100mm)	M	
WRK ZN PAV MRK NON-REMV (W)(SLD)(100mm)	M	
WRK ZN PAV MRK NON-REMV (W)(BRK)(100mm)	M	
WRK ZN PAV MRK NON-REMV (Y)(SLD)(100mm)	M	
ELIM EXT PAV MRK & MRKR (100mm)	M	112
VEH IMP ATTN ASSEM BRLS (PLACE)	EA	14
VEH IMP ATTN ASSEM BRLS (MOVE & RESET)	EA	
VEH IMP ATTN ASSEM BRLS (REMOVE)	EA	
RAIS PAV MRKR CL B (REFL) TY II-C-R	EA	
PORT CONC TRF BAR (FURN & INSTL)	M	127.4
PORT CONC TRF BAR (MOVE & RESET)	M	
PORT CONC TRF BAR (REMOVE)	M	
CONSTRUCT DETOURS (CL 3)	M2	

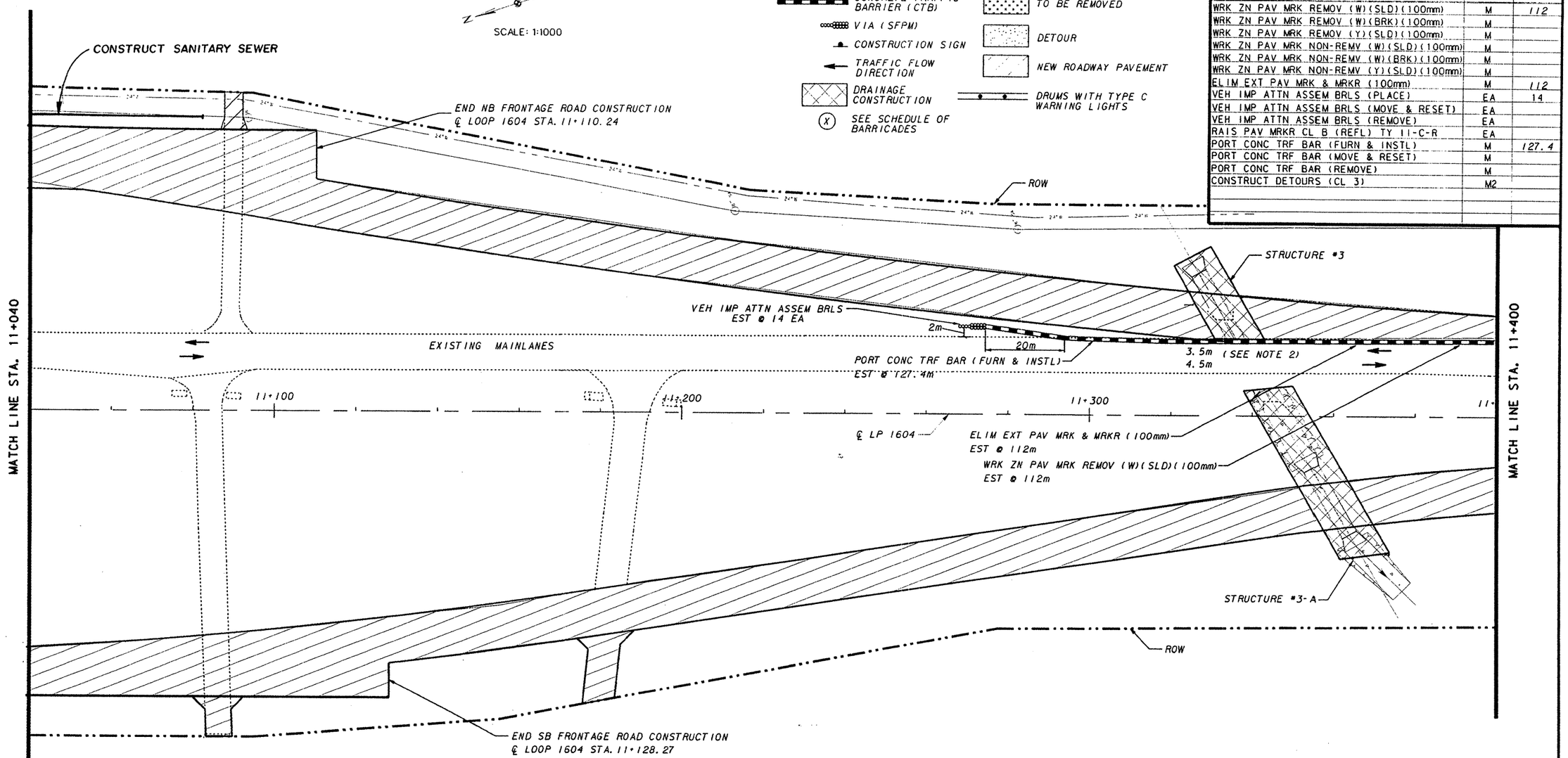

NOTES:

1. THE CONTRACTOR SHALL USE TEMPORARY LANE CLOSURE DETAIL TCP(2-1) FOR REMOVAL/CONSTRUCTION.
2. THE CONTRACTOR SHALL UTILIZE EXISTING PAVEMENT MARKINGS UNLESS OTHERWISE NOTED.
3. CONTRACTOR SHALL UTILIZE FLAGGER CONTROL AND APPROPIATE ADVANCE SIGNING WHEN TIEING INTO EXISTING PAVEMENT WITH TEMPORARY PAVEMENT.
4. ALL DRUMS, BARRICADES, WARNING LIGHTS, AND CONSTRUCTION SIGNING ARE TO BE PROVIDED BY THE CONTRACTOR AND ARE SUBSIDIARY TO ITEM 502.
5. THE CONTRACTOR SHALL USE BLACK BASE ON ALL DETOURS AND AT BRAUN ROAD, NEW GUILBEAU, BOWENS CROSSING, AND SHAENFIELD INTERSECTIONS. SEE INTERSECTION LAYOUTS FOR LIMITS OF BLACK BASE. ASPHALT SHALL BE PLACED BETWEEN BLACK BASE AND TOP OF EXISTING PAVEMENT AT 3:1 SLOPE. ASPHALT SLOPE SHALL BE USED BETWEEN PLACEMENT OF EACH LIFT OF BLACK BASE IF BOTH LIFTS CANNOT BE COMPLETED IN ONE (1) DAY. SLOPE SHALL BE REMOVED PRIOR TO PLACEMENT OF SECOND LIFT.

H:\DRAWINGS\67316O3\TCP\6047PC05.DGN

LEVELS DISPLAYED

STATE OF TEXAS — BRENT L. CHRISTIAN 73921 — REGISTERED PROFESSIONAL ENGINEER

Brent L. Christian
5/5/97

NO.	DATE	REVISION	APPROV.

Texas Department of Transportation
LOOP 1604

SEQUENCE OF WORK
PHASE 1
STA. 11+040 TO STA. 11+400

SHEET 6 OF 16

Kimley-Horn and Associates, Inc.

Designed	REX	DIST	FED REG	FEDERAL AID PROJECT				HIGHWAY
Checked	BLC	15	6					LP1604
Drawn	REX	COUNTY		CONTROL	SECT	JOB		SHEET
Checked	BLC	BEXAR		2452	01	035		71

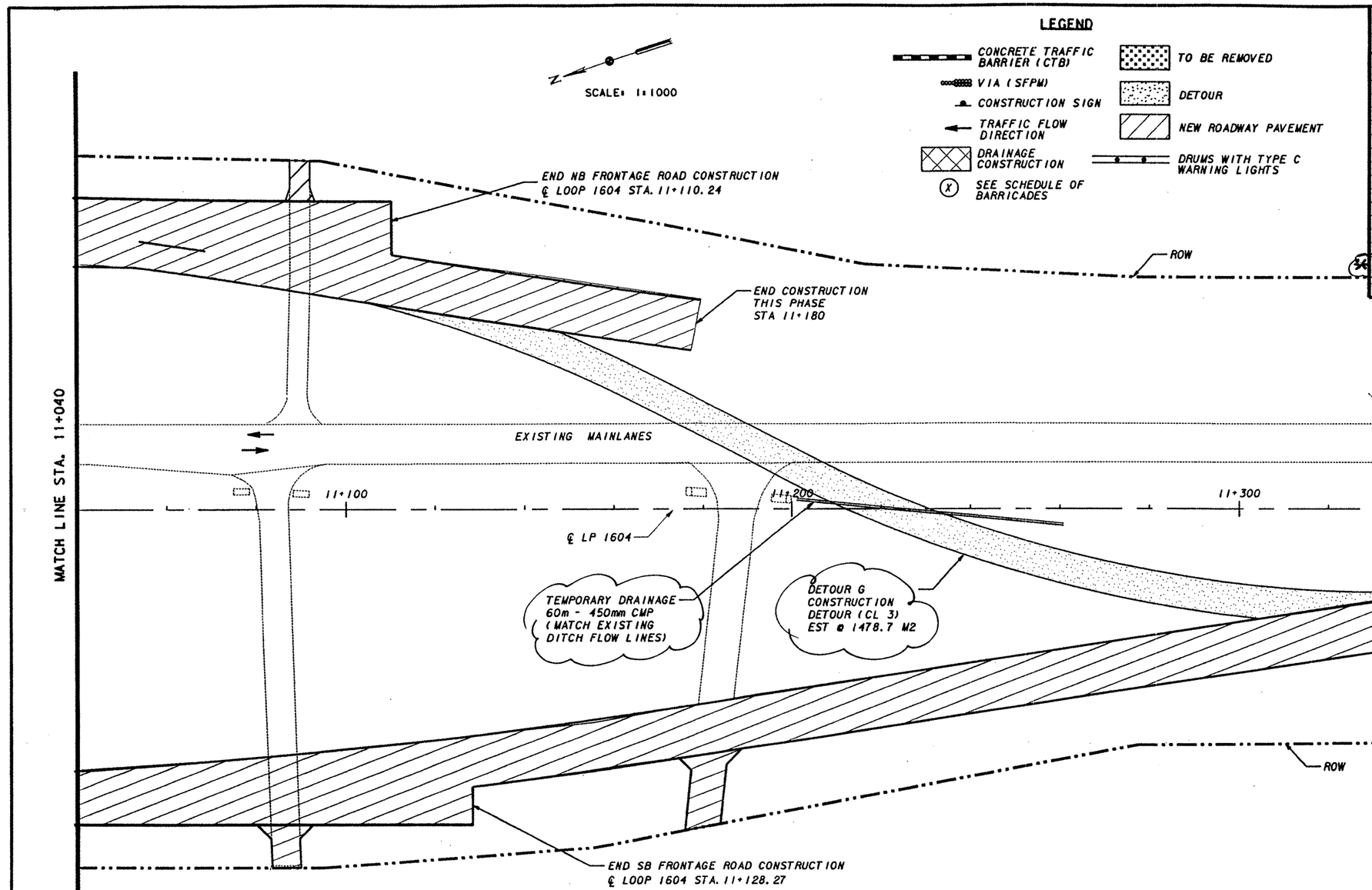

ESTIMATED QUANTITIES		
ITEM	UNIT	QTY
WRK ZN PAV MRK REMOV (W)(SLD)(100mm)	M	
WRK ZN PAV MRK REMOV (W)(BRK)(100mm)	M	
WRK ZN PAV MRK REMOV (Y)(SLD)(100mm)	M	
WRK ZN PAV MRK NON-REMV (W)(SLD)(100mm)	M	
WRK ZN PAV MRK NON-REMV (W)(BRK)(100mm)	M	
WRK ZN PAV MRK NON-REMV (Y)(SLD)(100mm)	M	
ELIM EXT PAV MRK & MRKR (100mm)	M	
VEH IMP ATTN ASSEM BRLS (PLACE)	EA	
VEH IMP ATTN ASSEM BRLS (MOVE & RESET)	EA	
VEH IMP ATTN ASSEM BRLS (REMOVE)	EA	
RAIS PAV MRKR CL B (REFL) TY II-C-R	EA	
PORT CONC TRF BAR (FURN & INSTL)	M	
PORT CONC TRF BAR (MOVE & RESET)	M	
PORT CONC TRF BAR (REMOVE)	M	
CONSTRUCT DETOURS (CL 3)	M2	1478.7
3* 450mm CMP	M	60

* SUBSIDIARY TO DETOUR ITEM

NOTES:

1. THE CONTRACTOR SHALL USE TEMPORARY LANE CLOSURE DETAIL TCP(2-1) FOR REMOVAL/CONSTRUCTION.
2. THE CONTRACTOR SHALL UTILIZE EXISTING PAVEMENT MARKINGS UNLESS OTHERWISE NOTED.
3. CONTRACTOR SHALL UTILIZE FLAGGER CONTROL AND APPROPIATE ADVANCE SIGNING WHEN TIEING INTO EXISTING PAVEMENT WITH TEMPORARY PAVEMENT.
4. ALL DRUMS, BARRICADES, WARNING LIGHTS, AND CONSTRUCTION SIGNING ARE TO BE PROVIDED BY THE CONTRACTOR AND ARE SUBSIDIARY TO ITEM 502.
5. THE CONTRACTOR SHALL USE BLACK BASE ON ALL DETOURS AND AT BRAUN ROAD, NEW GUILBEAU, BOWENS CROSSING, AND SHAENFIELD INTERSECTIONS. SEE INTERSECTION LAYOUTS FOR LIMITS OF BLACK BASE. ASPHALT SHALL BE PLACED BETWEEN BLACK BASE AND TOP OF EXISTING PAVEMENT AT 3:1 SLOPE. ASPHALT SLOPE SHALL BE USED BETWEEN PLACEMENT OF EACH LIFT OF BLACK BASE IF BOTH LIFTS CANNOT BE COMPLETED IN ONE (1) DAY. SLOPE SHALL BE REMOVED PRIOR TO PLACEMENT OF SECOND LIFT.
6. SEE SHEET 65 FOR DETOUR G PLAN & PROFILE

NO.	DATE	REVISION	APPROV.

Texas Department of Transportation
LOOP 1604

SEQUENCE OF WORK
PHASE 1
STA. 11+040 TO STA. 11+400

SHEET 6 OF 16

Kimley-Horn and Associates, Inc.

Designed	REK	DIST	FED REG	FEDERAL AID PROJECT #			HIGHWAY
Checked	BLC	15	6	CD2452-1-35			LP1604
Drawn	REK	COUNTY		CONTROL	SECT	JOB	SHEET
Checked	BLC	BEXAR		2452	01	035	71

STATE OF TEXAS
BRENT L. CHRISTIAN
73921
REGISTERED PROFESSIONAL ENGINEER

Brent L. Christian
5-14-98

CO#6

H:\DRAWINGS\6731603\TCP\604TPC05.DGN

LEVELS DISPLAYED

LEGEND

- CONCRETE TRAFFIC BARRIER (CTB)
- VIA (SFPM)
- CONSTRUCTION SIGN
- TRAFFIC FLOW DIRECTION
- DRAINAGE CONSTRUCTION
- (X) SEE SCHEDULE OF BARRICADES
- TO BE REMOVED
- DETOUR
- NEW ROADWAY PAVEMENT
- DRUMS WITH TYPE C WARNING LIGHTS

SCALE: 1:1000

ESTIMATED QUANTITIES

ITEM	UNIT	QTY
WRK ZN PAV MRK REMOV (W)(SLD)(100mm)	M	477
WRK ZN PAV MRK REMOV (W)(BRK)(100mm)	M	
WRK ZN PAV MRK REMOV (Y)(SLD)(100mm)	M	356
WRK ZN PAV MRK NON-REMV (W)(SLD)(100mm)	M	
WRK ZN PAV MRK NON-REMV (W)(BRK)(100mm)	M	
WRK ZN PAV MRK NON-REMV (Y)(SLD)(100mm)	M	
ELIM EXT PAV MRK & MRKR (100mm)	M	425
VEH IMP ATTN ASSEM BRLS (PLACE)	EA	42
VEH IMP ATTN ASSEM BRLS (MOVE & RESET)	EA	
VEH IMP ATTN ASSEM BRLS (REMOVE)	EA	28
RAIS PAV MRKR CL B (REFL) TY II-C-R	EA	
PORT CONC TRF BAR (FURN & INSTL)	M	218.4
PORT CONC TRF BAR (MOVE & RESET)	M	
PORT CONC TRF BAR (REMOVE)	M	109.2
CONSTRUCT DETOURS (CL 3)	M2	339.6

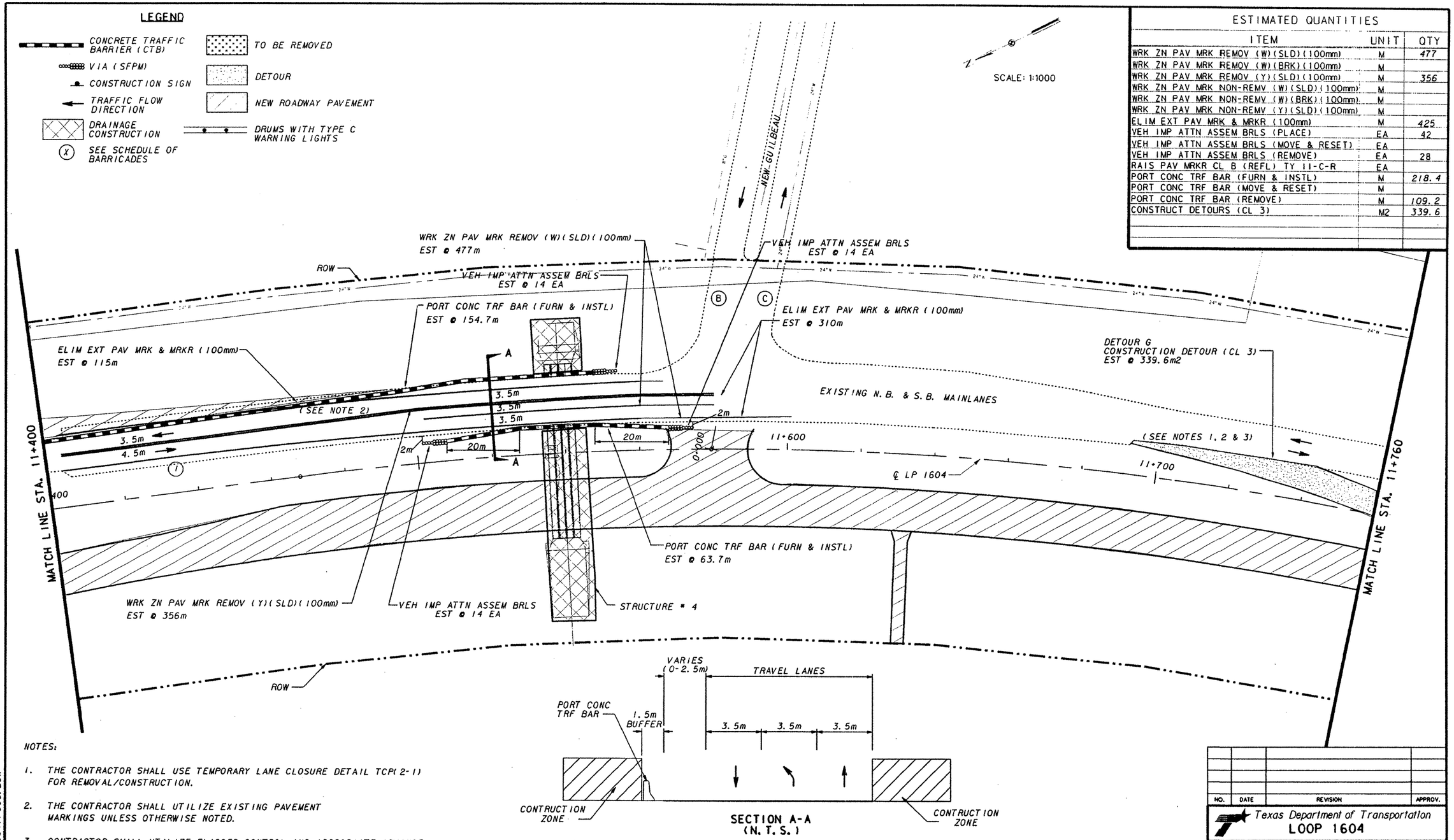

SECTION A-A
(N.T.S.)

NOTES:

1. THE CONTRACTOR SHALL USE TEMPORARY LANE CLOSURE DETAIL TCP(2-1) FOR REMOVAL/CONSTRUCTION.
2. THE CONTRACTOR SHALL UTILIZE EXISTING PAVEMENT MARKINGS UNLESS OTHERWISE NOTED.
3. CONTRACTOR SHALL UTILIZE FLAGGER CONTROL AND APPROPIATE ADVANCE SIGNING WHEN TIEING INTO EXISTING PAVEMENT WITH TEMPORARY PAVEMENT.
4. ALL DRUMS, BARRICADES, WARNING LIGHTS, AND CONSTRUCTION SIGNING ARE TO BE PROVIDED BY THE CONTRACTOR AND ARE SUBSIDIARY TO ITEM 502.
5. THE CONTRACTOR SHALL CONSTRUCT NEW TRAFFIC SIGNAL AT NEW GUILBEAU ROAD DURING PHASE 1. THE TRAFFIC SIGNAL HEADS SHALL NOT BE VISIBLE DURING CONSTRUCTION. THE TRAFFIC SIGNAL SHALL BE OPERATIONAL PRIOR TO BEGINNING PHASE 2 AND PRIOR TO REMOVING THE EXISTING TRAFFIC SIGNAL AT BOWENS CROSSING.
6. SEE SHEET 65 FOR DETOUR G PLAN AND PROFILE.
7. THE CONTRACTOR SHALL USE BLACK BASE ON ALL DETOURS AND AT BRAUN ROAD, NEW GUILBEAU, BOWENS CROSSING, AND SHAENFIELD INTERSECTIONS. SEE INTERSECTION LAYOUTS FOR LIMITS OF BLACK BASE. ASPHALT SHALL BE PLACED BETWEEN BLACK BASE AND TOP OF EXISTING PAVEMENT AT 3:1 SLOPE. ASPHALT SLOPE SHALL BE USED BETWEEN PLACEMENT OF EACH LIFT OF BLACK BASE IF BOTH LIFTS CANNOT BE COMPLETED IN ONE (1) DAY. SLOPE SHALL BE REMOVED PRIOR TO PLACEMENT OF SECOND LIFT.

STATE OF TEXAS
BRENT L. CHRISTIAN
73921
REGISTERED PROFESSIONAL ENGINEER

Brent L. Christian
5/5/97

NO.	DATE	REVISION	APPROV.

Texas Department of Transportation
LOOP 1604

SEQUENCE OF WORK
PHASE 1
STA. 11+400 TO 11+760

SHEET 7 OF 16

Kimley-Horn and Associates, Inc.

Designed	REK	DIST	FED REG	FEDERAL AID PROJECT				HIGHWAY
Checked	BLC	15	6					LP1604
Drawn	REK	COUNTY			CONTROL	SECT	JOB	SHEET
Checked	BLC	BEXAR			2452	01	035	72

LEVELS DISPLAYED
1 2 3 4 5 6 7 8 9 10 11 12 13 14 15 16
17 18 19 20 21 22 23 24 25 26 27 28 29 30 31 32
33 34 35 36 37 38 39 40 41 42 43 44 45 46 47 48
49 50 51 52 53 54 55 56 57 58 59 60 61 62 63

H:\DRAWINGS\673160 3\TCP\604TPC06.DGN

LEGEND

- CONCRETE TRAFFIC BARRIER (CTB)
- VIA (SFPM)
- CONSTRUCTION SIGN
- TRAFFIC FLOW DIRECTION
- DRAINAGE CONSTRUCTION
- (X) SEE SCHEDULE OF BARRICADES
- TO BE REMOVED
- DETOUR
- NEW ROADWAY PAVEMENT
- DRUMS WITH TYPE C WARNING LIGHTS

SCALE: 1:1000

ESTIMATED QUANTITIES

ITEM	UNIT	QTY
WRK ZN PAV MRK REMOV (W)(SLD)(100mm)	M	477
WRK ZN PAV MRK REMOV (W)(BRK)(100mm)	M	
WRK ZN PAV MRK REMOV (Y)(SLD)(100mm)	M	356
WRK ZN PAV MRK NON-REMV (W)(SLD)(100mm)	M	
WRK ZN PAV MRK NON-REMV (W)(BRK)(100mm)	M	
WRK ZN PAV MRK NON-REMV (Y)(SLD)(100mm)	M	
ELIM EXT PAV MRK & MRKR (100mm)	M	310
VEH IMP ATTN ASSEM BRLS (PLACE)	EA	1.28
VEH IMP ATTN ASSEM BRLS (MOVE & RESET)	EA	
VEH IMP ATTN ASSEM BRLS (REMOVE)	EA	28
RAIS PAV MRKR CL B (REFL) TY II-C-R	EA	
PORT CONC TRF BAR (FURN & INSTL)	M	100.1
PORT CONC TRF BAR (MOVE & RESET)	M	
PORT CONC TRF BAR (REMOVE)	M	100.1
CONSTRUCT DETOURS (CL 3)	M2	

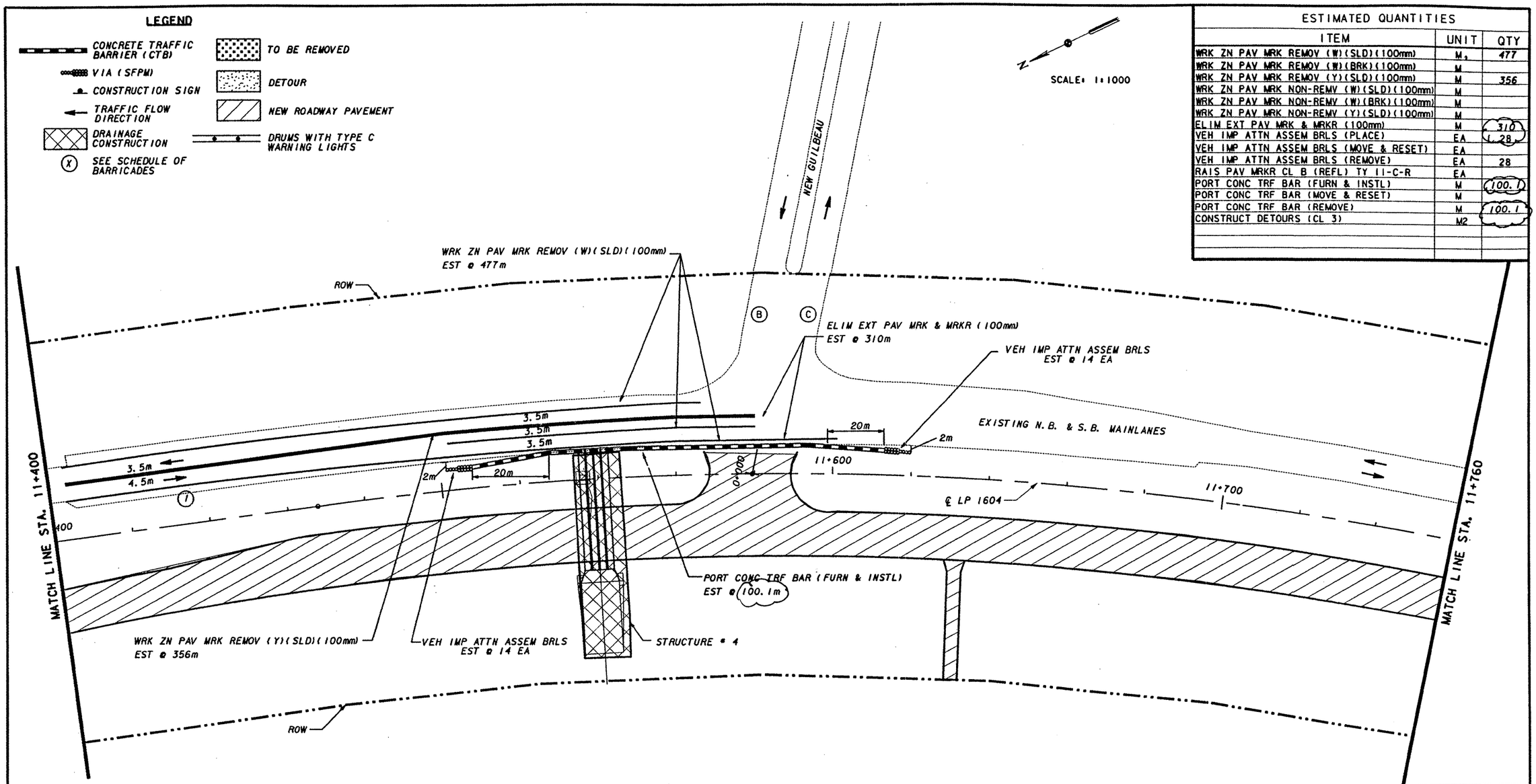

NOTES:

1. THE CONTRACTOR SHALL USE TEMPORARY LANE CLOSURE DETAIL TCP(2-1) FOR REMOVAL/CONSTRUCTION.
2. THE CONTRACTOR SHALL UTILIZE EXISTING PAVEMENT MARKINGS UNLESS OTHERWISE NOTED.
3. CONTRACTOR SHALL UTILIZE FLAGGER CONTROL AND APPROPIATE ADVANCE SIGNING WHEN TIEING INTO EXISTING PAVEMENT WITH TEMPORARY PAVEMENT.
4. ALL DRUMS, BARRICADES, WARNING LIGHTS, AND CONSTRUCTION SIGNING ARE TO BE PROVIDED BY THE CONTRACTOR AND ARE SUBSIDIARY TO ITEM 502.
5. THE CONTRACTOR SHALL CONSTRUCT NEW TRAFFIC SIGNAL AT NEW GUILBEAU ROAD DURING PHASE 1. THE TRAFFIC SIGNAL HEADS SHALL NOT BE VISIBLE DURING CONSTRUCTION. THE TRAFFIC SIGNAL SHALL BE OPERATIONAL PRIOR TO BEGINNING PHASE 2 AND PRIOR TO REMOVING THE EXISTING TRAFFIC SIGNAL AT BOWENS CROSSING.
6. THE CONTRACTOR SHALL USE BLACK BASE ON ALL DETOURS AND AT BRAUN ROAD, NEW GUILBEAU, BOWENS CROSSING, AND SHAENFIELD INTERSECTIONS. SEE INTERSECTION LAYOUTS FOR LIMITS OF BLACK BASE. ASPHALT SHALL BE PLACED BETWEEN BLACK BASE AND TOP OF EXISTING PAVEMENT AT 3:1 SLOPE. ASPHALT SLOPE SHALL BE USED BETWEEN PLACEMENT OF EACH LIFT OF BLACK BASE IF BOTH LIFTS CANNOT BE COMPLETED IN ONE (1) DAY. SLOPE SHALL BE REMOVED PRIOR TO PLACEMENT OF SECOND LIFT.

CO#6

Brent L. Christian 5-14-98

STATE OF TEXAS — BRENT L. CHRISTIAN — 73921 — REGISTERED PROFESSIONAL ENGINEER

NO.	DATE	REVISION	APPROV.

Texas Department of Transportation
LOOP 1604

SEQUENCE OF WORK
PHASE 1
STA. 11+400 TO 11+760

SHEET 7 OF 16

Kimley-Horn and Associates, Inc.

Designed	REK	DIST	FED REG	FEDERAL AID PROJECT #				HIGHWAY
Checked	BLC	15	6	CD 2452-1-35				LP1604
Drawn	REK	COUNTY			CONTROL	SECT	JOB	SHEET
Checked	BLC	BEXAR			2452	01	035	72

A

LEVELS DISPLAYED
1 2 3 4 5 6 7 8 9 10 11 12 13 14 15 16
11 41 82 122 232 282 292 293 313 152
33 43 53 63 73 83 93 103 114 115 116
45 55 65 75 85 95 105 116 124 145 146 148
49 56 156 256 356 455 576 595 666 164

H:\DRAWINGS\6731603\TCP\604TPC06.DGN

LEGEND

- CONCRETE TRAFFIC BARRIER (CTB)
- VIA (SFPM)
- CONSTRUCTION SIGN
- TRAFFIC FLOW DIRECTION
- DRAINAGE CONSTRUCTION
- (X) SEE SCHEDULE OF BARRICADES
- TO BE REMOVED
- DETOUR
- NEW ROADWAY PAVEMENT
- DRUMS WITH TYPE C WARNING LIGHTS

DETOUR H

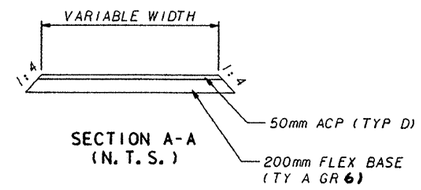

SECTION A-A
(N. T. S.)

SCALE: 1:1000

ESTIMATED QUANTITIES

ITEM	UNIT	QTY
WRK ZN PAV MRK REMOV (W)(SLD)(100mm)	M	
WRK ZN PAV MRK REMOV (W)(BRK)(100mm)	M	
WRK ZN PAV MRK REMOV (Y)(SLD)(100mm)	M	
WRK ZN PAV MRK NON-REMV (W)(SLD)(100mm)	M	
WRK ZN PAV MRK NON-REMV (W)(BRK)(100mm)	M	
WRK ZN PAV MRK NON-REMV (Y)(SLD)(100mm)	M	
ELIM EXT PAV MRK & MRKR (100mm)	M	
VEH IMP ATTN ASSEM BRLS (PLACE)	EA	
VEH IMP ATTN ASSEM BRLS (MOVE & RESET)	EA	
VEH IMP ATTN ASSEM BRLS (REMOVE)	EA	
RAIS PAV MRKR CL B (REFL) TY II-C-R	EA	
PORT CONC TRF BAR (FURN & INSTL)	M	
PORT CONC TRF BAR (MOVE & RESET)	M	
PORT CONC TRF BAR (REMOVE)	M	
CONSTRUCT DETOURS (CL 3)	M2	1227.7

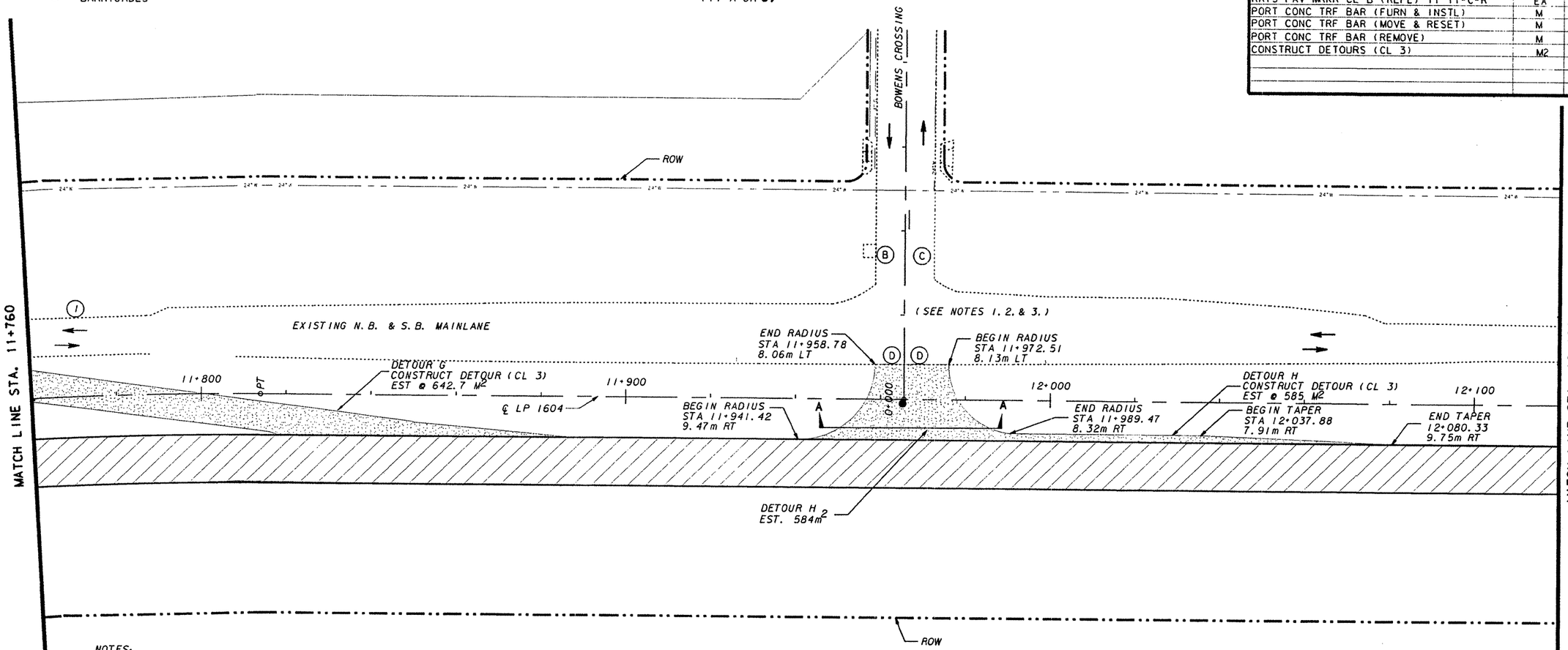

NOTES:

1. THE CONTRACTOR SHALL USE TEMPORARY LANE CLOSURE DETAIL TCP(2-1) FOR REMOVAL/CONSTRUCTION.
2. THE CONTRACTOR SHALL UTILIZE EXISTING PAVEMENT MARKINGS UNLESS OTHERWISE NOTED.
3. CONTRACTOR SHALL UTILIZE FLAGGER CONTROL AND APPROPRIATE ADVANCE SIGNING WHEN TIEING INTO EXISTING PAVEMENT WITH TEMPORARY PAVEMENT.
4. ALL DRUMS, BARRICADES, WARNING LIGHTS, AND CONSTRUCTION SIGNING ARE TO BE PROVIDED BY THE CONTRACTOR AND ARE SUBSIDIARY TO ITEM 502.
5. SEE SHEET 65 FOR DETOUR G PLAN AND PROFILE.
6. THE CONTRACTOR SHALL MAINTAIN TRAFFIC SIGNAL OPERATION AT BOWENS CROSSING THROUGHOUT PHASE 1. NEW TRAFFIC SIGNAL OPERATION AT NEW GUILBEAU ROAD SHALL BE COMPLETELY OPERATIONAL BEFORE THE REMOVAL OF EXISTING SIGNAL AT BOWENS CROSSING.
7. THE CONTRACTOR SHALL USE BLACK BASE ON ALL DETOURS AND AT BRAUN ROAD, NEW GUILBEAU, BOWENS CROSSING, AND SHAENFIELD INTERSECTIONS. SEE INTERSECTION LAYOUTS FOR LIMITS OF BLACK BASE. ASPHALT SHALL BE PLACED BETWEEN BLACK BASE AND TOP OF EXISTING PAVEMENT AT 3:1 SLOPE. ASPHALT SLOPE SHALL BE USED BETWEEN PLACEMENT OF EACH LIFT OF BLACK BASE IF BOTH LIFTS CANNOT BE COMPLETED IN ONE (1) DAY. SLOPE SHALL BE REMOVED PRIOR TO PLACEMENT OF SECOND LIFT.

STATE OF TEXAS
BRENT L. CHRISTIAN
73921
REGISTERED PROFESSIONAL ENGINEER

Brent L. Christian
5/5/97

NO.	DATE	REVISION	APPROV.

Texas Department of Transportation
LOOP 1604

SEQUENCE OF WORK
PHASE 1
STA. 11+760 TO STA. 12+120

SHEET 8 OF 16

Kimley-Horn and Associates, Inc.

Designed	REK	DIST	FED REG	FEDERAL AID PROJECT				HIGHWAY
Checked	BLC	15	6					LP1604
Drawn	REK	COUNTY			CONTROL	SECT	JOB	SHEET
Checked	BLC	BEXAR			2452	01	035	73

LEVELS DISPLAYED
1 2 3 4 5 6 7 8 9 10 11 12 13 14 15 16
17 18 19 20 21 22 23 24 25 26 27 28 29 30 31 32
33 34 35 36 37 38 39 40 41 42 43 44 45 46 47 48
49 50 51 52 53 54 55 56 57 58 59 60 61 62

H:\DRAWINGS\67316031\TCP\604TPC07.DGN

LEGEND

- CONCRETE TRAFFIC BARRIER (CTB)
- VIA (SFPM)
- CONSTRUCTION SIGN
- TRAFFIC FLOW DIRECTION
- DRAINAGE CONSTRUCTION
- (X) SEE SCHEDULE OF BARRICADES
- TO BE REMOVED
- DETOUR
- NEW ROADWAY PAVEMENT
- DRUMS WITH TYPE C WARNING LIGHTS

DETOUR H

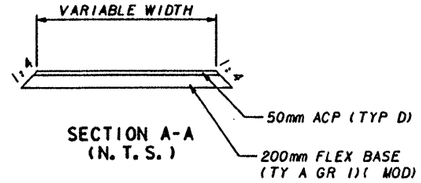

SECTION A-A
(N. T. S.)

SCALE: 1:1000

ESTIMATED QUANTITIES		
ITEM	UNIT	QTY
WRK ZN PAV MRK REMOV (W)(SLD)(100mm)	M	
WRK ZN PAV MRK REMOV (W)(BRK)(100mm)	M	
WRK ZN PAV MRK REMOV (Y)(SLD)(100mm)	M	
WRK ZN PAV MRK NON-REMV (W)(SLD)(100mm)	M	
WRK ZN PAV MRK NON-REMV (W)(BRK)(100mm)	M	
WRK ZN PAV MRK NON-REMV (Y)(SLD)(100mm)	M	
ELIM EXT PAV MRK & MRKR (100mm)	M	
VEH IMP ATTN ASSEM BRLS (PLACE)	EA	
VEH IMP ATTN ASSEM BRLS (MOVE & RESET)	EA	
VEH IMP ATTN ASSEM BRLS (REMOVE)	EA	
RAIS PAV MRKR CL B (REFL) TY II-C-R	EA	
PORT CONC TRF BAR (FURN & INSTL)	M	
PORT CONC TRF BAR (MOVE & RESET)	M	
PORT CONC TRF BAR (REMOVE)	M	
CONSTRUCT DETOURS (CL 3)	M2	585

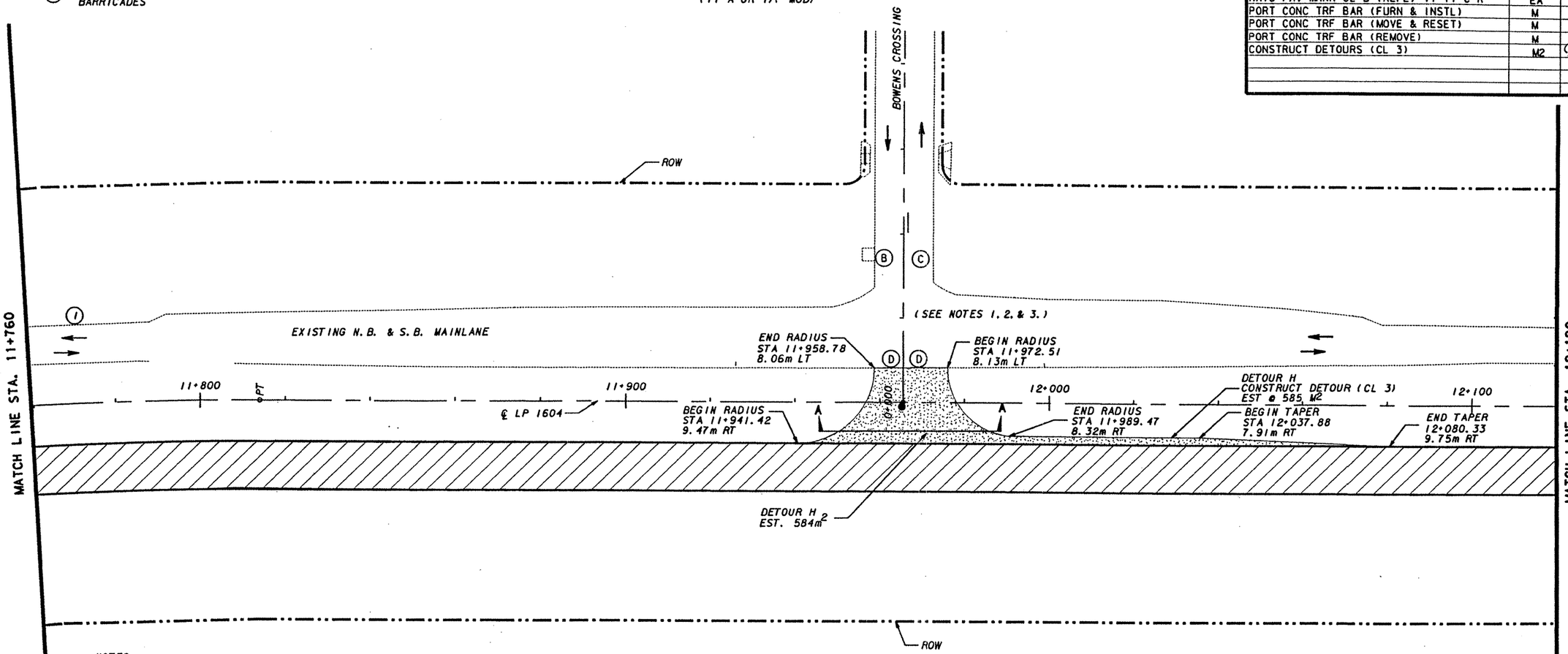

NOTES:

1. THE CONTRACTOR SHALL USE TEMPORARY LANE CLOSURE DETAIL TCP(2-1) FOR REMOVAL/CONSTRUCTION.
2. THE CONTRACTOR SHALL UTILIZE EXISTING PAVEMENT MARKINGS UNLESS OTHERWISE NOTED.
3. CONTRACTOR SHALL UTILIZE FLAGGER CONTROL AND APPROPRIATE ADVANCE SIGNING WHEN TIEING INTO EXISTING PAVEMENT WITH TEMPORARY PAVEMENT.
4. ALL DRUMS, BARRICADES, WARNING LIGHTS, AND CONSTRUCTION SIGNING ARE TO BE PROVIDED BY THE CONTRACTOR AND ARE SUBSIDIARY TO ITEM 502.
5. SEE SHEET 65 FOR DETOUR G PLAN AND PROFILE.
6. THE CONTRACTOR SHALL MAINTAIN TRAFFIC SIGNAL OPERATION AT BOWENS CROSSING THROUGHOUT PHASE 1. NEW TRAFFIC SIGNAL OPERATION AT NEW GUILBEAU ROAD SHALL BE COMPLETELY OPERATIONAL BEFORE THE REMOVAL OF EXISTING SIGNAL AT BOWENS CROSSING.
7. THE CONTRACTOR SHALL USE BLACK BASE ON ALL DETOURS AND AT BRAUN ROAD, NEW GUILBEAU, BOWENS CROSSING, AND SHAENFIELD INTERSECTIONS. SEE INTERSECTION LAYOUTS FOR LIMITS OF BLACK BASE. ASPHALT SHALL BE PLACED BETWEEN BLACK BASE AND TOP OF EXISTING PAVEMENT AT 3:1 SLOPE. ASPHALT SLOPE SHALL BE USED BETWEEN PLACEMENT OF EACH LIFT OF BLACK BASE IF BOTH LIFTS CANNOT BE COMPLETED IN ONE (1) DAY. SLOPE SHALL BE REMOVED PRIOR TO PLACEMENT OF SECOND LIFT.

NO.	DATE	REVISION	APPROV.

Texas Department of Transportation
LOOP 1604

SEQUENCE OF WORK
PHASE 1
STA. 11+760 TO STA. 12+120

SHEET 8 OF 16

Kimley-Horn and Associates, Inc.

STATE OF TEXAS
BRENT L. CHRISTIAN
73921
LICENSED
PROFESSIONAL ENGINEER

Brent L. Christian
5-14-98

CO#6

Designed	REK	DIST	FED REG	FEDERAL AID PROJECT #			HIGHWAY
Checked	BLC	15	6	CD2452-1-35			LP1604
Drawn	REK	COUNTY		CONTROL	SECT	JOB	SHEET
Checked	BLC	BEXAR		2452	01	035	73

A

LEVELS DISPLAYED
1 2 3 4 5 6 7 8 9 10 11 12 13 14 15 16
11 18 19 20 21 22 23 24 25 26 27 28 29 30 31 32
33 34 35 36 37 38 39 40 41 42 43 44 45 46 47 48
49 50 51 52 53 54 55 56 57 58 59 60 61 62

4:\DRAWINGS\67316031\TCP\604TPC07.DGN

LEGEND

- CONCRETE TRAFFIC BARRIER (CTB)
- VIA (SFPM)
- CONSTRUCTION SIGN
- TRAFFIC FLOW DIRECTION
- DRAINAGE CONSTRUCTION
- (X) SEE SCHEDULE OF BARRICADES
- TO BE REMOVED
- DETOUR
- NEW ROADWAY PAVEMENT
- DRUMS WITH TYPE C WARNING LIGHTS

SCALE: 1:1000

ESTIMATED QUANTITIES

ITEM	UNIT	QTY
WRK ZN PAV MRK REMOV (W)(SLD)(100mm)	M	
WRK ZN PAV MRK REMOV (W)(BRK)(100mm)	M	
WRK ZN PAV MRK REMOV (Y)(SLD)(100mm)	M	
WRK ZN PAV MRK NON-REMV (W)(SLD)(100mm)	M	
WRK ZN PAV MRK NON-REMV (W)(BRK)(100mm)	M	
WRK ZN PAV MRK NON-REMV (Y)(SLD)(100mm)	M	
ELIM EXT PAV MRK & MRKR (100mm)	M	
VEH IMP ATTN ASSEM BRLS (PLACE)	EA	
VEH IMP ATTN ASSEM BRLS (MOVE & RESET)	EA	
VEH IMP ATTN ASSEM BRLS (REMOVE)	EA	
RAIS PAV MRKR CL B (REFL) TY II-C-R	EA	
PORT CONC TRF BAR (FURN & INSTL)	M	
PORT CONC TRF BAR (MOVE & RESET)	M	
PORT CONC TRF BAR (REMOVE)	M	
CONSTRUCT DETOURS (CL 3)	M2	

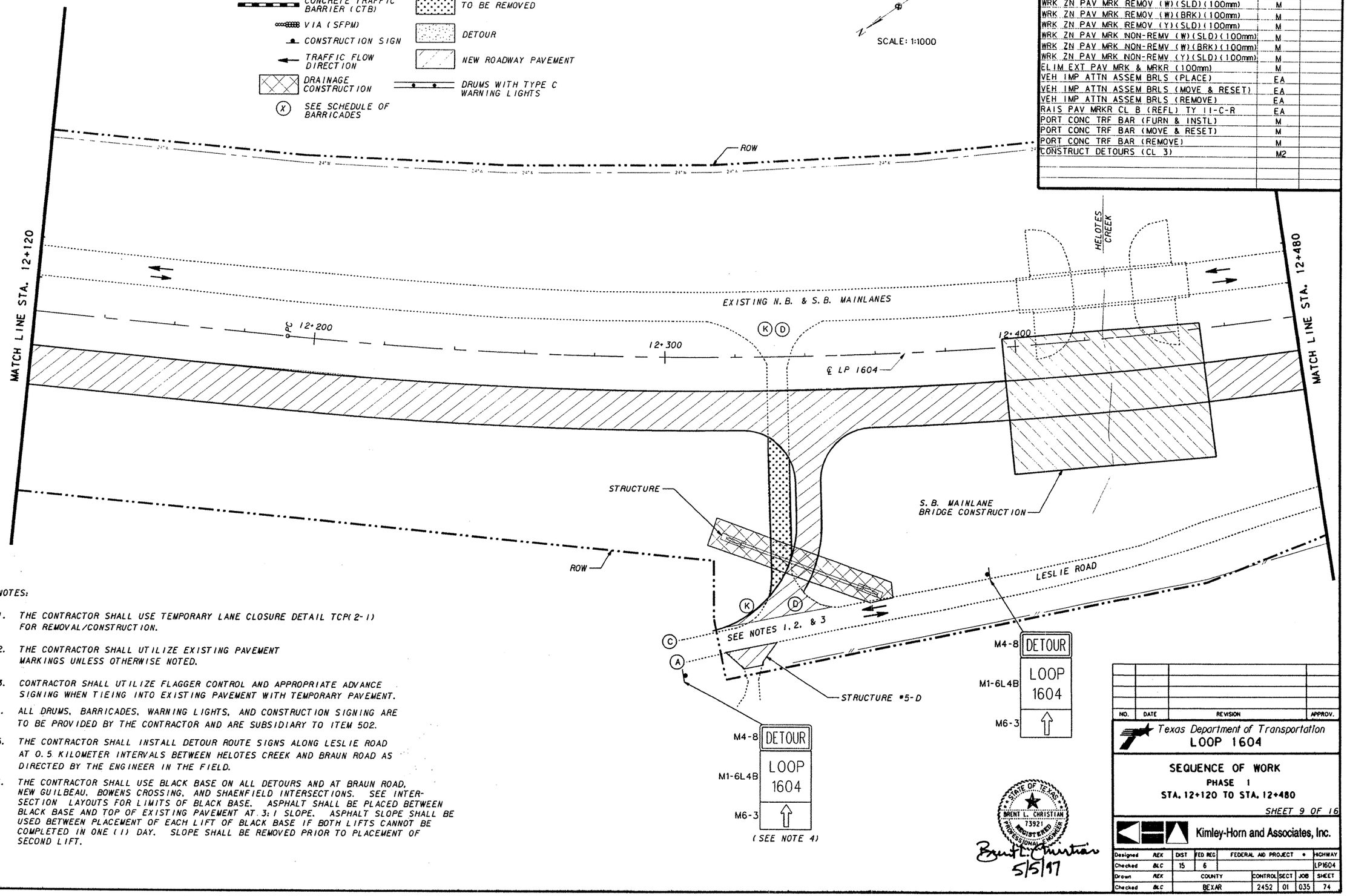

NOTES:

1. THE CONTRACTOR SHALL USE TEMPORARY LANE CLOSURE DETAIL TCP(2-1) FOR REMOVAL/CONSTRUCTION.
2. THE CONTRACTOR SHALL UTILIZE EXISTING PAVEMENT MARKINGS UNLESS OTHERWISE NOTED.
3. CONTRACTOR SHALL UTILIZE FLAGGER CONTROL AND APPROPRIATE ADVANCE SIGNING WHEN TIEING INTO EXISTING PAVEMENT WITH TEMPORARY PAVEMENT.
4. ALL DRUMS, BARRICADES, WARNING LIGHTS, AND CONSTRUCTION SIGNING ARE TO BE PROVIDED BY THE CONTRACTOR AND ARE SUBSIDIARY TO ITEM 502.
5. THE CONTRACTOR SHALL INSTALL DETOUR ROUTE SIGNS ALONG LESLIE ROAD AT 0.5 KILOMETER INTERVALS BETWEEN HELOTES CREEK AND BRAUN ROAD AS DIRECTED BY THE ENGINEER IN THE FIELD.
6. THE CONTRACTOR SHALL USE BLACK BASE ON ALL DETOURS AND AT BRAUN ROAD, NEW GUILBEAU, BOWENS CROSSING, AND SHAENFIELD INTERSECTIONS. SEE INTERSECTION LAYOUTS FOR LIMITS OF BLACK BASE. ASPHALT SHALL BE PLACED BETWEEN BLACK BASE AND TOP OF EXISTING PAVEMENT AT 3:1 SLOPE. ASPHALT SLOPE SHALL BE USED BETWEEN PLACEMENT OF EACH LIFT OF BLACK BASE IF BOTH LIFTS CANNOT BE COMPLETED IN ONE (1) DAY. SLOPE SHALL BE REMOVED PRIOR TO PLACEMENT OF SECOND LIFT.

NO.	DATE	REVISION	APPROV.

Texas Department of Transportation
LOOP 1604

SEQUENCE OF WORK
PHASE 1
STA. 12+120 TO STA. 12+480

SHEET 9 OF 16

Kimley-Horn and Associates, Inc.

STATE OF TEXAS — BRENT L. CHRISTIAN — 73921 — REGISTERED PROFESSIONAL ENGINEER

Brent L. Christian 5/5/17

Designed	REK	DIST	FED REG	FEDERAL AID PROJECT #				HIGHWAY
Checked	BLC	15	6					LP1604
Drawn	REK	COUNTY		CONTROL	SECT	JOB		SHEET
Checked	BLC	BEXAR		2452	01	035		74

LEVELS DISPLAYED

H:\DRAWINGS\67316031\TCP\604TPC08.DGN

LEGEND

- CONCRETE TRAFFIC BARRIER (CTB)
- VIA (SFPM)
- CONSTRUCTION SIGN
- TRAFFIC FLOW DIRECTION
- DRAINAGE CONSTRUCTION
- (X) SEE SCHEDULE OF BARRICADES
- TO BE REMOVED
- DETOUR
- NEW ROADWAY PAVEMENT
- DRUMS WITH TYPE C WARNING LIGHTS

SCALE: 1:1000

ESTIMATED QUANTITIES

ITEM	UNIT	QTY
WRK ZN PAV MRK REMOV (W)(SLD)(100mm)	M	
WRK ZN PAV MRK REMOV (W)(BRK)(100mm)	M	
WRK ZN PAV MRK REMOV (Y)(SLD)(100mm)	M	
WRK ZN PAV MRK NON-REMV (W)(SLD)(100mm)	M	
WRK ZN PAV MRK NON-REMV (W)(BRK)(100mm)	M	
WRK ZN PAV MRK NON-REMV (Y)(SLD)(100mm)	M	
ELIM EXT PAV MRK & MRKR (100mm)	M	
VEH IMP ATTN ASSEM BRLS (PLACE)	EA	
VEH IMP ATTN ASSEM BRLS (MOVE & RESET)	EA	
VEH IMP ATTN ASSEM BRLS (REMOVE)	EA	
RAIS PAV MRKR CL B (REFL) TY II-C-R	EA	
PORT CONC TRF BAR (FURN & INSTL)	M	
PORT CONC TRF BAR (MOVE & RESET)	M	
PORT CONC TRF BAR (REMOVE)	M	
CONSTRUCT DETOURS (CL 3)	M2	

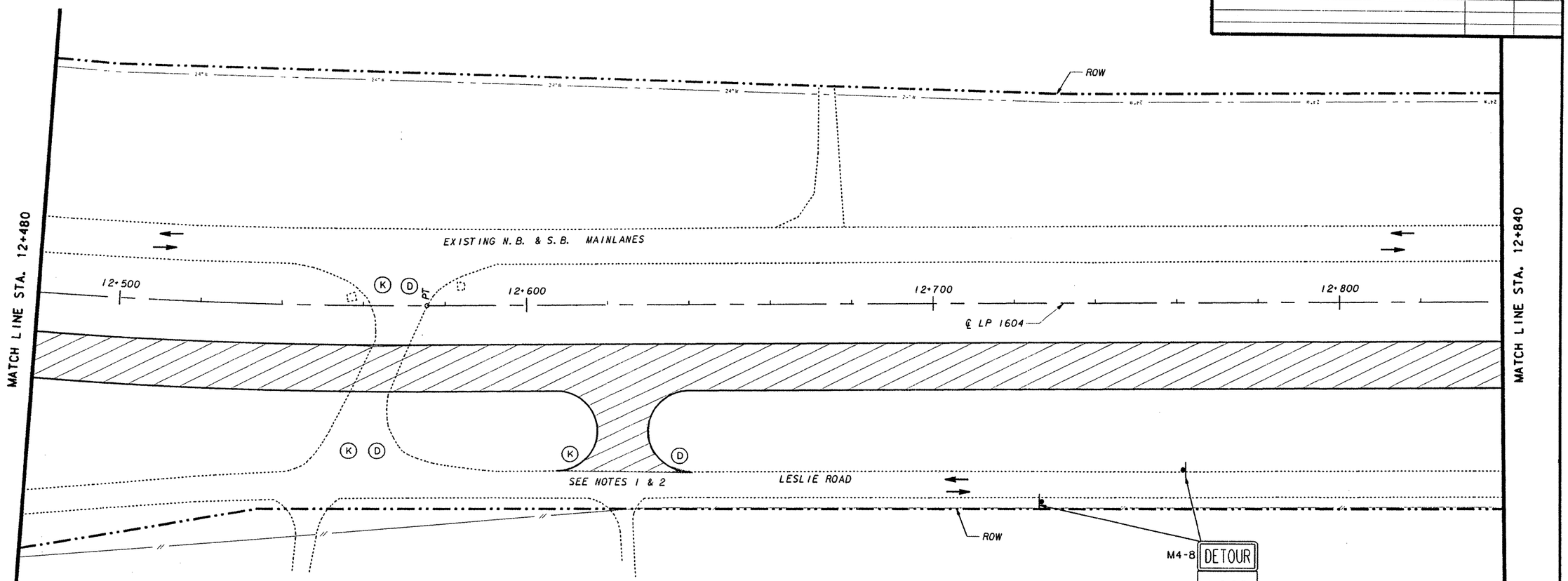

NOTES:

1. THE CONTRACTOR SHALL USE TEMPORARY LANE CLOSURE DETAIL TCP(2-1) FOR REMOVAL/CONSTRUCTION.
2. THE CONTRACTOR SHALL UTILIZE EXISTING PAVEMENT MARKINGS UNLESS OTHERWISE NOTED.
3. CONTRACTOR SHALL UTILIZE FLAGGER CONTROL AND APPROPRIATE ADVANCE SIGNING WHEN TIEING INTO EXISTING PAVEMENT WITH TEMPORARY PAVEMENT.
4. ALL DRUMS, BARRICADES, WARNING LIGHTS, AND CONSTRUCTION SIGNING ARE TO BE PROVIDED BY THE CONTRACTOR AND ARE SUBSIDIARY TO ITEM 502.
5. THE CONTRACTOR SHALL USE BLACK BASE ON ALL DETOURS AND AT BRAUN ROAD, NEW GUILBEAU, BOWENS CROSSING, AND SHAENFIELD INTERSECTIONS. SEE INTERSECTION LAYOUTS FOR LIMITS OF BLACK BASE. ASPHALT SHALL BE PLACED BETWEEN BLACK BASE AND TOP OF EXISTING PAVEMENT AT 3:1 SLOPE. ASPHALT SLOPE SHALL BE USED BETWEEN PLACEMENT OF EACH LIFT OF BLACK BASE IF BOTH LIFTS CANNOT BE COMPLETED IN ONE (1) DAY. SLOPE SHALL BE REMOVED PRIOR TO PLACEMENT OF SECOND LIFT.

NO.	DATE	REVISION	APPROV.

Texas Department of Transportation
LOOP 1604

STATE OF TEXAS
BRENT L. CHRISTIAN
73921
REGISTERED PROFESSIONAL ENGINEER

Brent L. Christian
5/5/97

SEQUENCE OF WORK

PHASE 1
STA. 12+480 TO STA. 12+840

SHEET 10 OF 16

Kimley-Horn and Associates, Inc.

Designed	REK	DIST	FED REG	FEDERAL AID PROJECT				HIGHWAY
Checked	BLC	15	6					LP1604
Drawn	REK	COUNTY		CONTROL	SECT	JOB		SHEET
Checked	BLC	BEXAR		2452	01	035		75

LEVELS DISPLAYED															
1	2	3	4	5	6	7	8	9	10	11	12	13	14	15	16
17	18	19	20	21	22	23	24	25	26	27	28	29	30	31	32
33	34	35	36	37	38	39	40	41	42	43	44	45	46	47	48
49	50	51	52	53	54	55	56	57	58	59	60	61	62		

H:\DRAWINGS\67316O3\TCP\604TPC09.DGN

LEGEND

- CONCRETE TRAFFIC BARRIER (CTB)
- VIA (SFPM)
- CONSTRUCTION SIGN
- TRAFFIC FLOW DIRECTION
- DRAINAGE CONSTRUCTION
- (X) SEE SCHEDULE OF BARRICADES
- TO BE REMOVED
- DETOUR
- NEW ROADWAY PAVEMENT
- DRUMS WITH TYPE C WARNING LIGHTS

SCALE: 1:1000

ESTIMATED QUANTITIES

ITEM	UNIT	QTY
WRK ZN PAV MRK REMOV (W)(SLD)(100mm)	M	
WRK ZN PAV MRK REMOV (W)(BRK)(100mm)	M	
WRK ZN PAV MRK REMOV (Y)(SLD)(100mm)	M	
WRK ZN PAV MRK NON-REMV (W)(SLD)(100mm)	M	
WRK ZN PAV MRK NON-REMV (W)(BRK)(100mm)	M	
WRK ZN PAV MRK NON-REMV (Y)(SLD)(100mm)	M	
ELIM EXT PAV MRK & MRKR (100mm)	M	
VEH IMP ATTN ASSEM BRLS (PLACE)	EA	
VEH IMP ATTN ASSEM BRLS (MOVE & RESET)	EA	
VEH IMP ATTN ASSEM BRLS (REMOVE)	EA	
RAIS PAV MRKR CL B (REFL) TY II-C-R	EA	
PORT CONC TRF BAR (FURN & INSTL)	M	
PORT CONC TRF BAR (MOVE & RESET)	M	
PORT CONC TRF BAR (REMOVE)	M	
CONSTRUCT DETOURS (CL 3)	M2	

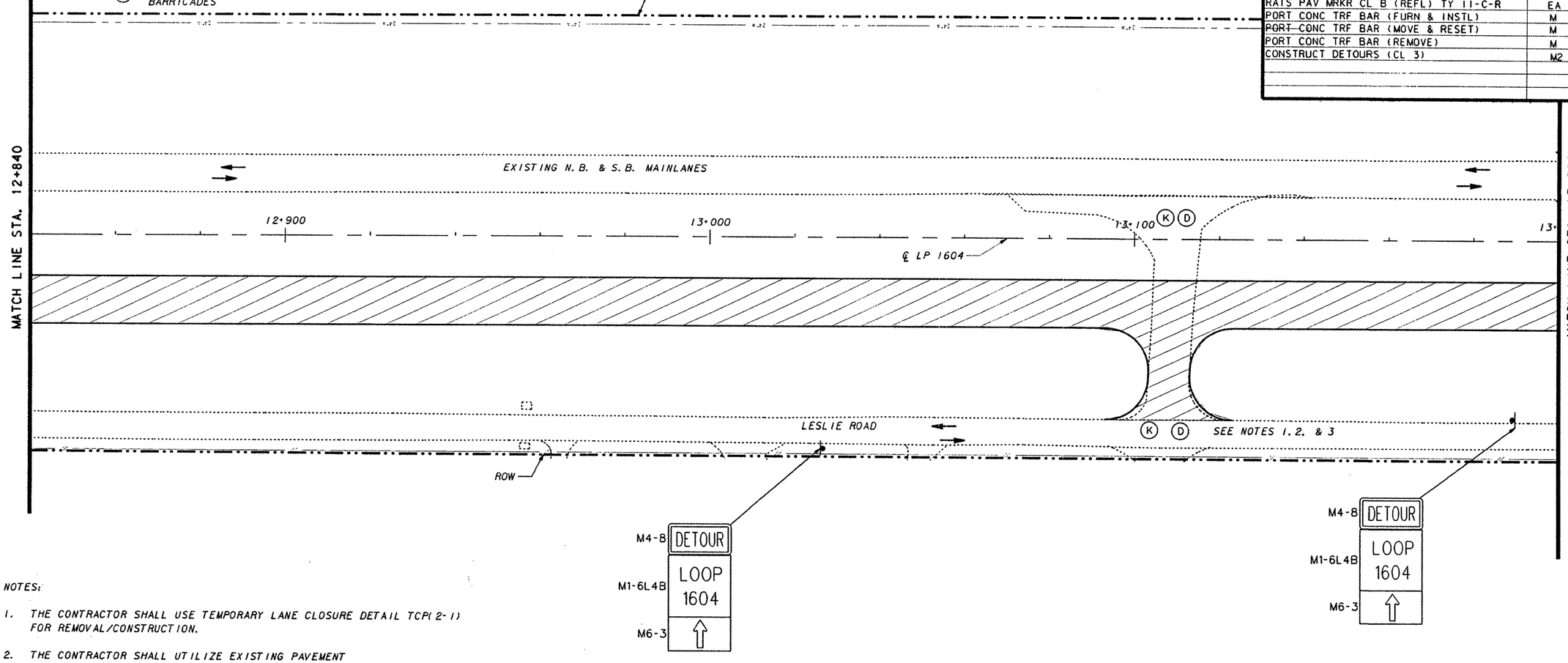

NOTES:

1. THE CONTRACTOR SHALL USE TEMPORARY LANE CLOSURE DETAIL TCP(2-1) FOR REMOVAL/CONSTRUCTION.
2. THE CONTRACTOR SHALL UTILIZE EXISTING PAVEMENT MARKINGS UNLESS OTHERWISE NOTED.
3. CONTRACTOR SHALL UTILIZE FLAGGER CONTROL AND APPROPRIATE ADVANCE SIGNING WHEN TIEING INTO EXISTING PAVEMENT WITH TEMPORARY PAVEMENT.
4. ALL DRUMS, BARRICADES, WARNING LIGHTS, AND CONSTRUCTION SIGNING ARE TO BE PROVIDED BY THE CONTRACTOR AND ARE SUBSIDIARY TO ITEM 502.
5. THE CONTRACTOR SHALL USE BLACK BASE ON ALL DETOURS AND AT BRAUN ROAD, NEW GUILBEAU, BOWENS CROSSING, AND SHAENFIELD INTERSECTIONS. SEE INTERSECTION LAYOUTS FOR LIMITS OF BLACK BASE. ASPHALT SHALL BE PLACED BETWEEN BLACK BASE AND TOP OF EXISTING PAVEMENT AT 3:1 SLOPE. ASPHALT SLOPE SHALL BE USED BETWEEN PLACEMENT OF EACH LIFT OF BLACK BASE IF BOTH LIFTS CANNOT BE COMPLETED IN ONE (1) DAY. SLOPE SHALL BE REMOVED PRIOR TO PLACEMENT OF SECOND LIFT.

NO.	DATE	REVISION	APPROV.

Texas Department of Transportation
LOOP 1604

SEQUENCE OF WORK
PHASE 1
STA. 12+840 TO STA. 13+200

SHEET 11 OF 16

STATE OF TEXAS
BRENT L. CHRISTIAN
73921
REGISTERED PROFESSIONAL ENGINEER

Brent L. Christian
5/5/97

Kimley-Horn and Associates, Inc.

Designed	REK	DIST	FED REG	FEDERAL AID PROJECT				HIGHWAY
Checked	BLC	15	6					LP1604
Drawn	REK	COUNTY		CONTROL	SECT	JOB		SHEET
Checked	BLC	BEXAR		2452	01	035		76

LEVELS DISPLAYED
1 2 3 4 5 6 7 8 9 10 11 12 13 14 15 16
17 18 19 20 21 22 23 24 25 26 27 28 29 30 31 32
33 34 35 36 37 38 39 40 41 42 43 44 45 46 47 48
49 50 51 52 53 54 55 56 57 58 59 60 61 62 63

H:\DRAWINGS\673160 3\TCP\6047PC10.DGN

LEGEND

- CONCRETE TRAFFIC BARRIER (CTB)
- VIA (SFPM)
- CONSTRUCTION SIGN
- TRAFFIC FLOW DIRECTION
- DRAINAGE CONSTRUCTION
- (X) SEE SCHEDULE OF BARRICADES
- TO BE REMOVED
- DETOUR
- NEW ROADWAY PAVEMENT
- DRUMS WITH TYPE C WARNING LIGHTS

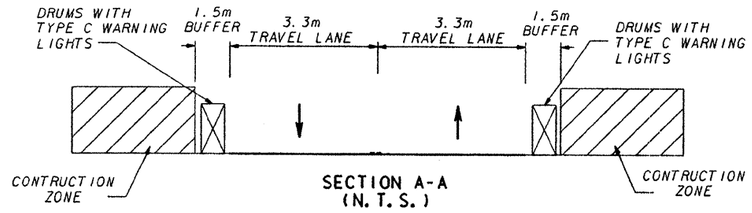

SECTION A-A
(N. T. S.)

SCALE: 1:1000

ESTIMATED QUANTITIES		
ITEM	UNIT	QTY
WRK ZN PAV MRK REMOV (W)(SLD)(100mm)	M	155
WRK ZN PAV MRK REMOV (W)(BRK)(100mm)	M	
WRK ZN PAV MRK REMOV (Y)(SLD)(100mm)	M	98.
WRK ZN PAV MRK NON-REMV (W)(SLD)(100mm)	M	
WRK ZN PAV MRK NON-REMV (W)(BRK)(100mm)	M	
WRK ZN PAV MRK NON-REMV (Y)(SLD)(100mm)	M	
ELIM EXT PAV MRK & MRKR (100mm)	M	
VEH IMP ATTN ASSEM BRLS (PLACE)	EA	
VEH IMP ATTN ASSEM BRLS (MOVE & RESET)	EA	
VEH IMP ATTN ASSEM BRLS (REMOVE)	EA	
RAIS PAV MRKR CL B (REFL) TY II-C-R	EA	
PORT CONC TRF BAR (FURN & INSTL)	M	
PORT CONC TRF BAR (MOVE & RESET)	M	
PORT CONC TRF BAR (REMOVE)	M	
CONSTRUCT DETOURS (CL 3)	M2	242.5

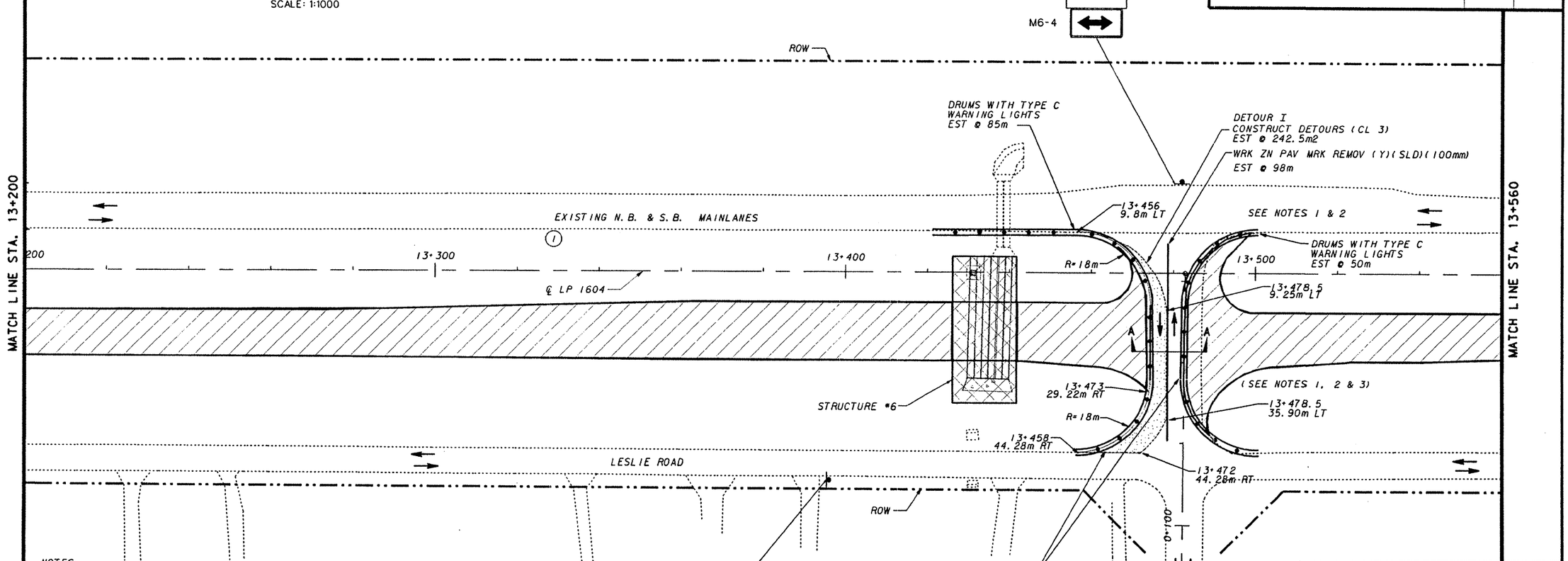

NOTES:

1. THE CONTRACTOR SHALL USE TEMPORARY LANE CLOSURE DETAIL TCP(2-1) FOR REMOVAL/CONSTRUCTION.
2. THE CONTRACTOR SHALL UTILIZE EXISTING PAVEMENT MARKINGS UNLESS OTHERWISE NOTED.
3. CONTRACTOR SHALL UTILIZE FLAGGER CONTROL AND APPROPRIATE ADVANCE SIGNING WHEN TIEING INTO EXISTING PAVEMENT WITH TEMPORARY PAVEMENT.
4. ALL DRUMS, BARRICADES, WARNING LIGHTS, AND CONSTRUCTION SIGNING ARE TO BE PROVIDED BY THE CONTRACTOR AND ARE SUBSIDIARY TO ITEM 502.
5. THE CONTRACTOR SHALL USE BLACK BASE ON ALL DETOURS AND AT BRAUN ROAD, NEW GUILBEAU, BOWENS CROSSING, AND SHAENFIELD INTERSECTIONS. SEE INTERSECTION LAYOUTS FOR LIMITS OF BLACK BASE. ASPHALT SHALL BE PLACED BETWEEN BLACK BASE AND TOP OF EXISTING PAVEMENT AT 3:1 SLOPE. ASPHALT SLOPE SHALL BE USED BETWEEN PLACEMENT OF EACH LIFT OF BLACK BASE IF BOTH LIFTS CANNOT BE COMPLETED IN ONE (1) DAY. SLOPE SHALL BE REMOVED PRIOR TO PLACEMENT OF SECOND LIFT.

STATE OF TEXAS
BRENT L. CHRISTIAN
73921
REGISTERED PROFESSIONAL ENGINEER

Brent L. Christian
5/5/97

NO.	DATE	REVISION	APPROV.

Texas Department of Transportation
LOOP 1604

SEQUENCE OF WORK

SHAENFIELD ROAD PHASE 1 - STEP 1
STA. 13+200 TO STA. 13+560

SHEET 12 OF 16

Kimley-Horn and Associates, Inc.

Designed	REK	DIST	FED REG	FEDERAL AID PROJECT				HIGHWAY
Checked	BLC	15	6					LP1604
Drawn	REK	COUNTY		CONTROL	SECT	JOB		SHEET
Checked	BLC	BEXAR		2452	01	035		77

LEVELS DISPLAYED

H:\DRAWINGS\673\603\TCP\604TPC11.DGN

LEGEND

- CONCRETE TRAFFIC BARRIER (CTB)
- VIA (SFPM)
- CONSTRUCTION SIGN
- TRAFFIC FLOW DIRECTION
- DRAINAGE CONSTRUCTION
- (X) SEE SCHEDULE OF BARRICADES
- TO BE REMOVED
- DETOUR
- NEW ROADWAY PAVEMENT
- DRUMS WITH TYPE C WARNING LIGHTS

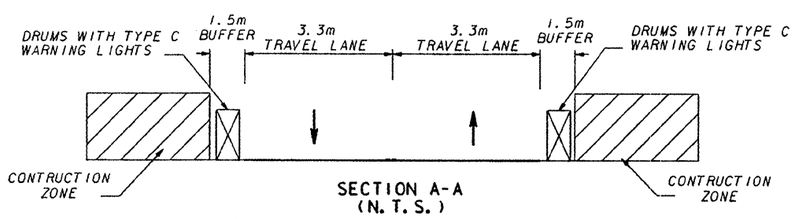

SECTION A-A
(N. T. S.)

SCALE: 1:1000

ESTIMATED QUANTITIES

ITEM	UNIT	QTY
WRK ZN PAV MRK REMOV (W)(SLD)(100mm)	M	152
WRK ZN PAV MRK REMOV (W)(BRK)(100mm)	M	
WRK ZN PAV MRK REMOV (Y)(SLD)(100mm)	M	108
WRK ZN PAV MRK NON-REMV (W)(SLD)(100mm)	M	
WRK ZN PAV MRK NON-REMV (W)(BRK)(100mm)	M	
WRK ZN PAV MRK NON-REMV (Y)(SLD)(100mm)	M	
ELIM EXT PAV MRK & MRKR (100mm)	M	
VEH IMP ATTN ASSEM BRLS (PLACE)	EA	
VEH IMP ATTN ASSEM BRLS (MOVE & RESET)	EA	
VEH IMP ATTN ASSEM BRLS (REMOVE)	EA	
RAIS PAV MRKR CL B (REFL) TY II-C-R	EA	
PORT CONC TRF BAR (FURN & INSTL)	M	
PORT CONC TRF BAR (MOVE & RESET)	M	
PORT CONC TRF BAR (REMOVE)	M	
CONSTRUCT DETOURS (CL 3)	M2	400

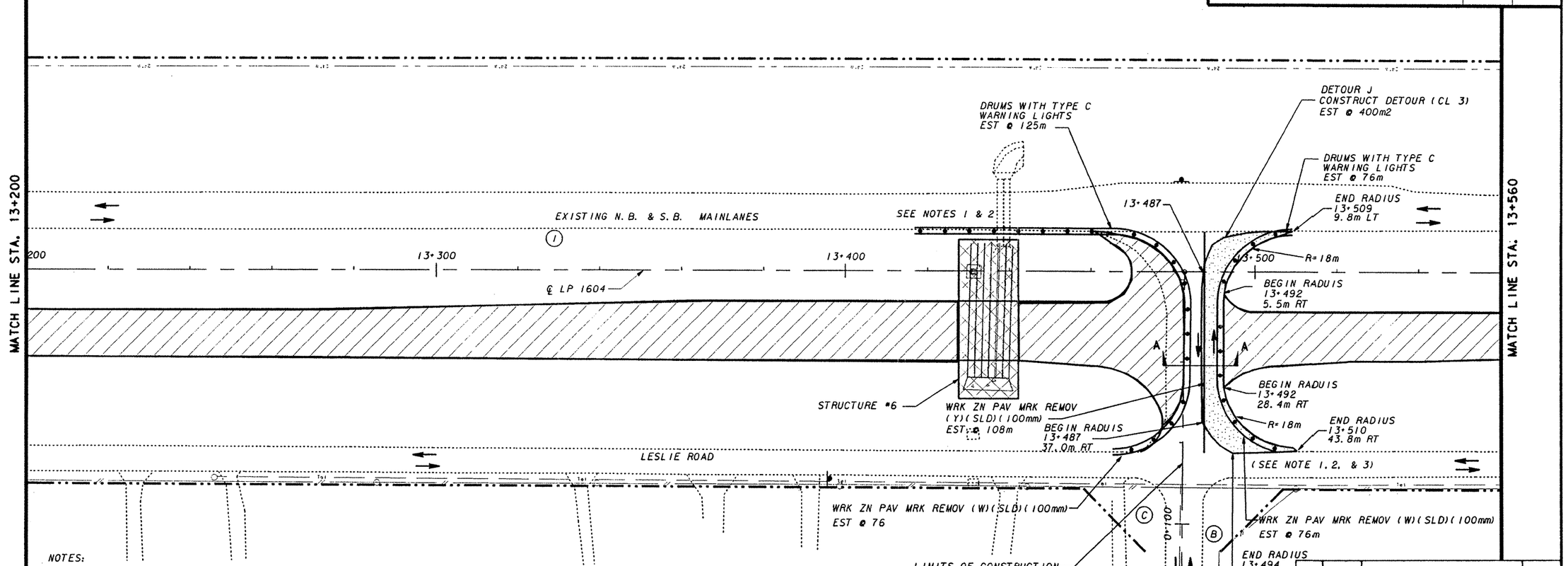

NOTES:

1. THE CONTRACTOR SHALL USE TEMPORARY LANE CLOSURE DETAIL TCP(2-1) FOR REMOVAL/CONSTRUCTION.
2. THE CONTRACTOR SHALL UTILIZE EXISTING PAVEMENT MARKINGS UNLESS OTHERWISE NOTED.
3. CONTRACTOR SHALL UTILIZE FLAGGER CONTROL AND APPROPRIATE ADVANCE SIGNING WHEN TIEING INTO EXISTING PAVEMENT WITH TEMPORARY PAVEMENT.
4. ALL DRUMS, BARRICADES, WARNING LIGHTS, AND CONSTRUCTION SIGNING ARE TO BE PROVIDED BY THE CONTRACTOR AND ARE SUBSIDIARY TO ITEM 502.
5. THE CONTRACTOR SHALL USE BLACK BASE ON ALL DETOURS AND AT BRAUN ROAD, NEW GUILBEAU, BOWENS CROSSING, AND SHAENFIELD INTERSECTIONS. SEE INTERSECTION LAYOUTS FOR LIMITS OF BLACK BASE. ASPHALT SHALL BE PLACED BETWEEN BLACK BASE AND TOP OF EXISTING PAVEMENT AT 3:1 SLOPE. ASPHALT SLOPE SHALL BE USED BETWEEN PLACEMENT OF EACH LIFT OF BLACK BASE IF BOTH LIFTS CANNOT BE COMPLETED IN ONE (1) DAY. SLOPE SHALL BE REMOVED PRIOR TO PLACEMENT OF SECOND LIFT.

STATE OF TEXAS
BRENT L. CHRISTIAN
73921
REGISTERED PROFESSIONAL ENGINEER

Brent L. Christian
5/5/97

NO.	DATE	REVISION	APPROV.

Texas Department of Transportation
LOOP 1604

SEQUENCE OF WORK

SHAENFIELD ROAD PHASE 1 - STEP 2
STA. 13+200 TO STA. 13+560

SHEET 13 OF 16

Kimley-Horn and Associates, Inc.

Designed	REK	DIST	FED REG	FEDERAL AID PROJECT #				HIGHWAY
Checked	BLC	15	6					LP1604
Drawn	REK	COUNTY		CONTROL	SECT	JOB		SHEET
Checked	BLC	BEXAR		2452	01	035		78

LEVELS DISPLAYED
1 2 3 4 5 6 7 8 9 10 11 12 13 14 15 16
17 18 19 20 21 22 23 24 25 26 27 28 29 30 31 32
33 34 35 36 37 38 39 40 41 42 43 44 45 46 47 48
49 50 51 52 53 54 55 56 57 58 59 60 61 62 63

H:\DRAWINGS\67316O3\TCP\604TPC11a.DGN

LEGEND

- CONCRETE TRAFFIC BARRIER (CTB)
- VIA (SFPM)
- CONSTRUCTION SIGN
- TRAFFIC FLOW DIRECTION
- DRAINAGE CONSTRUCTION
- (X) SEE SCHEDULE OF BARRICADES
- TO BE REMOVED
- DETOUR
- NEW ROADWAY PAVEMENT
- DRUMS WITH TYPE C WARNING LIGHTS

SCALE: 1:1000

ESTIMATED QUANTITIES

ITEM	UNIT	QTY
WRK ZN PAV MRK REMOV (W)(SLD)(100mm)	M	
WRK ZN PAV MRK REMOV (W)(BRK)(100mm)	M	
WRK ZN PAV MRK REMOV (Y)(SLD)(100mm)	M	
WRK ZN PAV MRK NON-REMV (W)(SLD)(100mm)	M	
WRK ZN PAV MRK NON-REMV (W)(BRK)(100mm)	M	
WRK ZN PAV MRK NON-REMV (Y)(SLD)(100mm)	M	
ELIM EXT PAV MRK & MRKR (100mm)	M	
VEH IMP ATTN ASSEM BRLS (PLACE)	EA	
VEH IMP ATTN ASSEM BRLS (MOVE & RESET)	EA	
VEH IMP ATTN ASSEM BRLS (REMOVE)	EA	
RAIS PAV MRKR CL B (REFL) TY II-C-R	EA	
PORT CONC TRF BAR (FURN & INSTL)	M	
PORT CONC TRF BAR (MOVE & RESET)	M	
PORT CONC TRF BAR (REMOVE)	M	
CONSTRUCT DETOURS (CL 3)	M2	

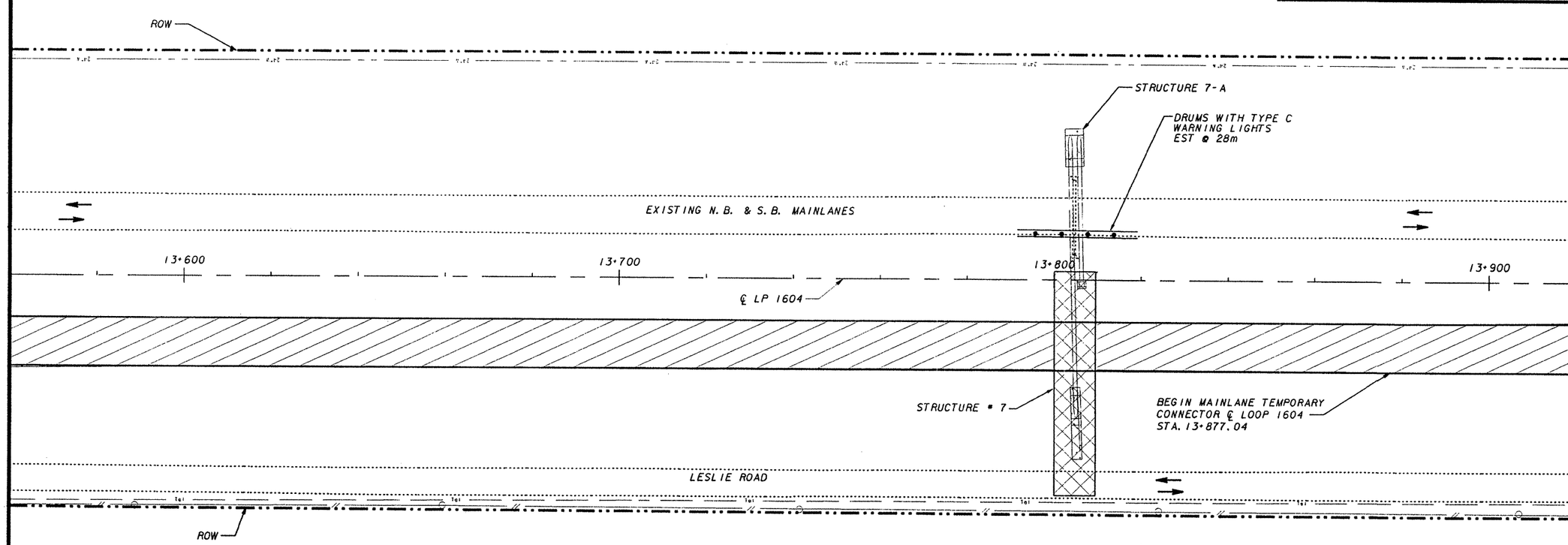

NOTES:

1. THE CONTRACTOR SHALL USE TEMPORARY LANE CLOSURE DETAIL TCP(2-1) FOR REMOVAL/CONSTRUCTION.
2. THE CONTRACTOR SHALL UTILIZE EXISTING PAVEMENT MARKINGS UNLESS OTHERWISE NOTED.
3. CONTRACTOR SHALL UTILIZE FLAGGER CONTROL AND APPROPRIATE ADVANCE SIGNING WHEN TIEING INTO EXISTING PAVEMENT WITH TEMPORARY PAVEMENT.
4. ALL DRUMS, BARRICADES, WARNING LIGHTS, AND CONSTRUCTION SIGNING ARE TO BE PROVIDED BY THE CONTRACTOR AND ARE SUBSIDIARY TO ITEM 502.
5. THE CONTRACTOR SHALL USE BLACK BASE ON ALL DETOURS AND AT BRAUN ROAD, NEW GUILBEAU, BOWENS CROSSING, AND SHAENFIELD INTERSECTIONS. SEE INTERSECTION LAYOUTS FOR LIMITS OF BLACK BASE. ASPHALT SHALL BE PLACED BETWEEN BLACK BASE AND TOP OF EXISTING PAVEMENT AT 3:1 SLOPE. ASPHALT SLOPE SHALL BE USED BETWEEN PLACEMENT OF EACH LIFT OF BLACK BASE IF BOTH LIFTS CANNOT BE COMPLETED IN ONE (1) DAY. SLOPE SHALL BE REMOVED PRIOR TO PLACEMENT OF SECOND LIFT.

STATE OF TEXAS
BRENT L. CHRISTIAN
73921
REGISTERED PROFESSIONAL ENGINEER

Brent L. Christian
5/5/97

NO.	DATE	REVISION	APPROV.

Texas Department of Transportation
LOOP 1604

SEQUENCE OF WORK
PHASE 1
STA. 13+560 TO STA. 13+920

SHEET 14 OF 16

Kimley-Horn and Associates, Inc.

Designed	AEK	DIST	FED REG	FEDERAL AID PROJECT #				HIGHWAY
Checked	BLC	15	6					LP1604
Drawn	AEK	COUNTY		CONTROL	SECT	JOB		SHEET
Checked	BLC	BEXAR		2452	01	035		79

LEVELS DISPLAYED
1 2 3 4 5 6 7 8 9 10 11 12 13 14 15 16
17 18 19 20 21 22 23 24 25 26 27 28 29 30 31 32
33 34 35 36 37 38 39 40 41 42 43 44 45 46 47 48
49 50 51 52 53 54 55 56 57 58 59 60 61 62 63

H:\DRAWINGS\67316031\TCP\604TPC12.DGN

LEGEND

- CONCRETE TRAFFIC BARRIER (CTB)
- VIA (SFPM)
- CONSTRUCTION SIGN
- TRAFFIC FLOW DIRECTION
- DRAINAGE CONSTRUCTION
- (X) SEE SCHEDULE OF BARRICADES
- TO BE REMOVED
- DETOUR
- NEW ROADWAY PAVEMENT
- DRUMS WITH TYPE C WARNING LIGHTS

SCALE: 1:1000

ESTIMATED QUANTITIES

ITEM	UNIT	QTY
WRK ZN PAV MRK REMOV (W)(SLD)(100mm)	M	70
WRK ZN PAV MRK REMOV (W)(BRK)(100mm)	M	
WRK ZN PAV MRK REMOV (Y)(SLD)(100mm)	M	
WRK ZN PAV MRK NON-REMV (W)(SLD)(100mm)	M	
WRK ZN PAV MRK NON-REMV (W)(BRK)(100mm)	M	
WRK ZN PAV MRK NON-REMV (Y)(SLD)(100mm)	M	
ELIM EXT PAV MRK & MRKR (100mm)	M	70
VEH IMP ATTN ASSEM BRLS (PLACE)	EA	
VEH IMP ATTN ASSEM BRLS (MOVE & RESET)	EA	
VEH IMP ATTN ASSEM BRLS (REMOVE)	EA	
RAIS PAV MRKR CL B (REFL) TY II-C-R	EA	
PORT CONC TRF BAR (FURN & INSTL)	M	154.7
PORT CONC TRF BAR (MOVE & RESET)	M	
PORT CONC TRF BAR (REMOVE)	M	154.7
CONSTRUCT DETOURS (CL 3)	M2	

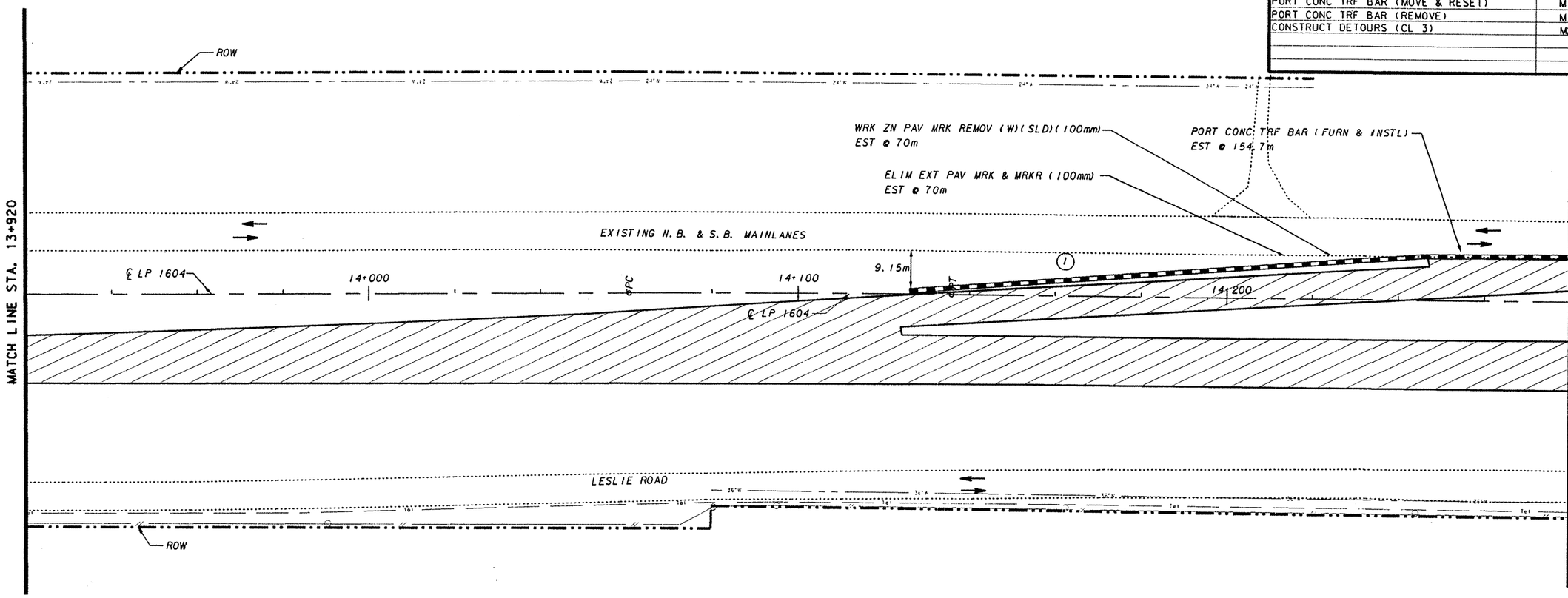

NOTES:

1. THE CONTRACTOR SHALL USE TEMPORARY LANE CLOSURE DETAIL TCP(2-1) FOR REMOVAL/CONSTRUCTION.
2. THE CONTRACTOR SHALL UTILIZE EXISTING PAVEMENT MARKINGS UNLESS OTHERWISE NOTED.
3. CONTRACTOR SHALL UTILIZE FLAGGER CONTROL AND APPROPRIATE ADVANCE SIGNING WHEN TIEING INTO EXISTING PAVEMENT WITH TEMPORARY PAVEMENT.
4. ALL DRUMS, BARRICADES, WARNING LIGHTS, AND CONSTRUCTION SIGNING ARE TO BE PROVIDED BY THE CONTRACTOR AND ARE SUBSIDIARY TO ITEM 502.
5. THE CONTRACTOR SHALL USE BLACK BASE ON ALL DETOURS AND AT BRAUN ROAD, NEW GUILBEAU, BOWENS CROSSING, AND SHAENFIELD INTERSECTIONS. SEE INTERSECTION LAYOUTS FOR LIMITS OF BLACK BASE. ASPHALT SHALL BE PLACED BETWEEN BLACK BASE AND TOP OF EXISTING PAVEMENT AT 3:1 SLOPE. ASPHALT SLOPE SHALL BE USED BETWEEN PLACEMENT OF EACH LIFT OF BLACK BASE IF BOTH LIFTS CANNOT BE COMPLETED IN ONE (1) DAY. SLOPE SHALL BE REMOVED PRIOR TO PLACEMENT OF SECOND LIFT.

STATE OF TEXAS
BRENT L. CHRISTIAN
73921
REGISTERED PROFESSIONAL ENGINEER

Brent Christian
5/5/97

NO.	DATE	REVISION	APPROV.

Texas Department of Transportation
LOOP 1604

SEQUENCE OF WORK
PHASE 1
STA. 13+920 TO STA. 14+280

SHEET 15 OF 16

Kimley-Horn and Associates, Inc.

Designed	REK	DIST	FED REG	FEDERAL AID PROJECT				HIGHWAY
Checked	BLC	15	6					LP1604
Drawn	REK	COUNTY		CONTROL	SECT	JOB		SHEET
Checked	BLC	BEXAR		2452	01	035		80

LEVELS DISPLAYED

H:\DRAWINGS\67316031\TCP\604TPC13.DGN

LEGEND

- CONCRETE TRAFFIC BARRIER (CTB)
- VIA (SFPM)
- CONSTRUCTION SIGN
- TRAFFIC FLOW DIRECTION
- DRAINAGE CONSTRUCTION
- (X) SEE SCHEDULE OF BARRICADES
- TO BE REMOVED
- DETOUR
- NEW ROADWAY PAVEMENT
- DRUMS WITH TYPE C WARNING LIGHTS

N

SCALE: 1:1000

ESTIMATED QUANTITIES

ITEM	UNIT	QTY
WRK ZN PAV MRK REMOV (W)(SLD)(100mm)	M	312
WRK ZN PAV MRK REMOV (W)(BRK)(100mm)	M	
WRK ZN PAV MRK REMOV (Y)(SLD)(100mm)	M	312
WRK ZN PAV MRK NON-REMV (W)(SLD)(100mm)	M	
WRK ZN PAV MRK NON-REMV (W)(BRK)(100mm)	M	
WRK ZN PAV MRK NON-REMV (Y)(SLD)(100mm)	M	
ELIM EXT PAV MRK & MRKR (100mm)	M	624
VEH IMP ATTN ASSEM BRLS (PLACE)	EA	
VEH IMP ATTN ASSEM BRLS (MOVE & RESET)	EA	
VEH IMP ATTN ASSEM BRLS (REMOVE)	EA	
RAIS PAV MRKR CL B (REFL) TY II-C-R	EA	
PORT CONC TRF BAR (FURN & INSTL)	M	163.8
PORT CONC TRF BAR (MOVE & RESET)	M	
PORT CONC TRF BAR (REMOVE)	M	163.8
CONSTRUCT DETOURS (CL 3)	M2	712.9

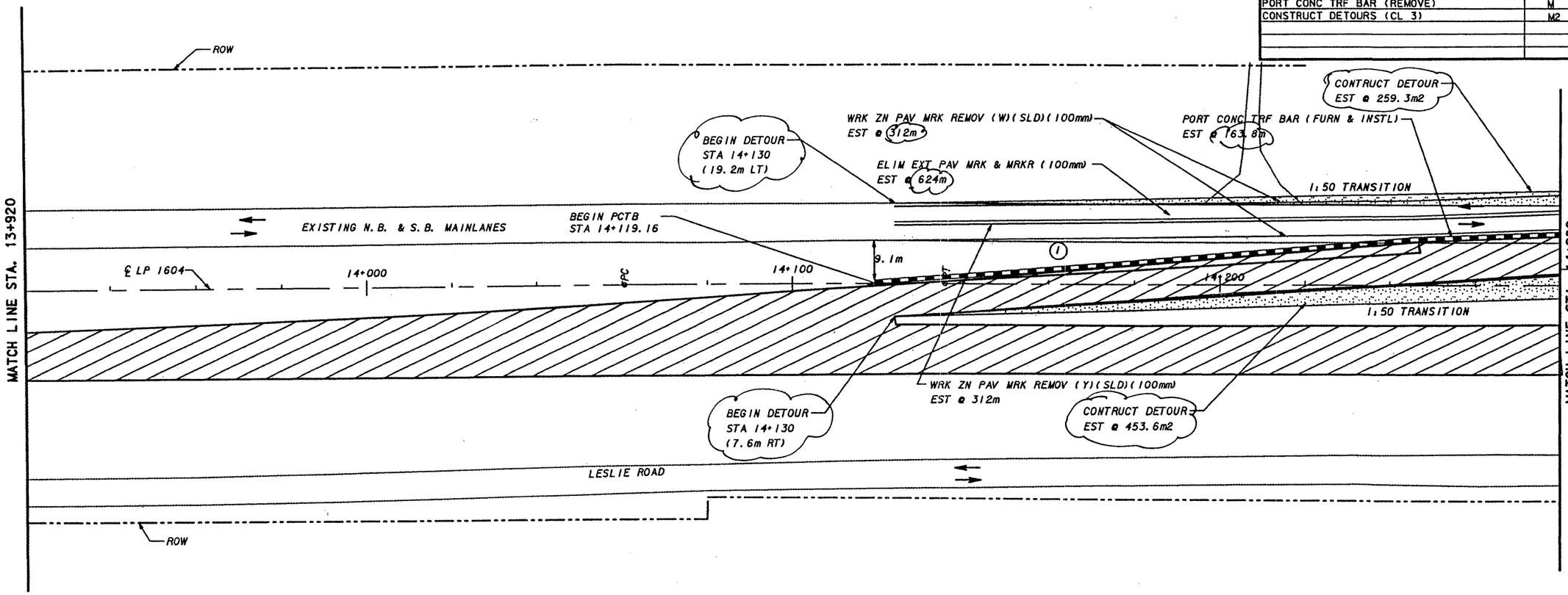

NOTES:

1. THE CONTRACTOR SHALL USE TEMPORARY LANE CLOSURE DETAIL TCP(2-1) FOR REMOVAL/CONSTRUCTION.
2. THE CONTRACTOR SHALL UTILIZE EXISTING PAVEMENT MARKINGS UNLESS OTHERWISE NOTED.
3. CONTRACTOR SHALL UTILIZE FLAGGER CONTROL AND APPROPRIATE ADVANCE SIGNING WHEN TIEING INTO EXISTING PAVEMENT WITH TEMPORARY PAVEMENT.
4. ALL DRUMS, BARRICADES, WARNING LIGHTS, AND CONSTRUCTION SIGNING ARE TO BE PROVIDED BY THE CONTRACTOR AND ARE SUBSIDIARY TO ITEM 502.
5. THE CONTRACTOR SHALL USE BLACK BASE ON ALL DETOURS AND AT BRAUN ROAD, NEW GUILBEAU, BOWENS CROSSING, AND SHAENFIELD INTERSECTIONS. SEE INTERSECTION LAYOUTS FOR LIMITS OF BLACK BASE. ASPHALT SHALL BE PLACED BETWEEN BLACK BASE AND TOP OF EXISTING PAVEMENT AT 3:1 SLOPE. ASPHALT SLOPE SHALL BE USED BETWEEN PLACEMENT OF EACH LIFT OF BLACK BASE IF BOTH LIFTS CANNOT BE COMPLETED IN ONE (1) DAY. SLOPE SHALL BE REMOVED PRIOR TO PLACEMENT OF SECOND LIFT.

NO.	DATE	REVISION	APPROV.

Texas Department of Transportation
LOOP 1604

SEQUENCE OF WORK
PHASE 1
STA. 13+920 TO STA. 14+280
SHEET 15 OF 16

Kimley-Horn and Associates, Inc.

STATE OF TEXAS
BRENT L. CHRISTIAN
73921
REGISTERED PROFESSIONAL ENGINEER

Brent L. Christian
4-20-98

CO#6

Designed	REX	DIST	FED REG	FEDERAL AID PROJECT	HIGHWAY
Checked	BLC	15	6	CD2452-1-35	LP1604
Drawn	REX	COUNTY		CONTROL SECT JOB	SHEET
Checked	BLC	BEXAR		2452 01 035	15A

LEVELS DISPLAYED
1 2 3 4 5 6 7 8 9 10 11 12 13 14 15 16
17 18 19 20 21 22 23 24 25 26 27 28 29 30 31 32
33 34 35 36 37 38 39 40 41 42 43 44 45 46 47 48
49 50 51 52 53 54 55 56 57 58 59 60 61 62 63

H:\DRAWINGS\6731603\TCP\6047PR13.DGN

LEGEND

- CONCRETE TRAFFIC BARRIER (CTB)
- VIA (SFPM)
- CONSTRUCTION SIGN
- TRAFFIC FLOW DIRECTION
- DRAINAGE CONSTRUCTION
- (X) SEE SCHEDULE OF BARRICADES
- TO BE REMOVED
- DETOUR
- NEW ROADWAY PAVEMENT
- DRUMS WITH TYPE C WARNING LIGHTS

SCALE: 1:1000

ESTIMATED QUANTITIES

ITEM	UNIT	QTY
WRK ZN PAV MRK REMOV (W)(SLD)(100mm)	M	255
WRK ZN PAV MRK REMOV (W)(BRK)(100mm)	M	
WRK ZN PAV MRK REMOV (Y)(SLD)(100mm)	M	
WRK ZN PAV MRK NON-REMV (W)(SLD)(100mm)	M	
WRK ZN PAV MRK NON-REMV (W)(BRK)(100mm)	M	
WRK ZN PAV MRK NON-REMV (Y)(SLD)(100mm)	M	
ELIM EXT PAV MRK & MRKR (100mm)	M	255
VEH IMP ATTN ASSEM BRLS (PLACE)	EA	14
VEH IMP ATTN ASSEM BRLS (MOVE & RESET)	EA	
VEH IMP ATTN ASSEM BRLS (REMOVE)	EA	14
RAIS PAV MRKR CL B (REFL) TY II-C-R	EA	
PORT CONC TRF BAR (FURN & INSTL)	M	245.7
PORT CONC TRF BAR (MOVE & RESET)	M	
PORT CONC TRF BAR (REMOVE)	M	245.7
CONSTRUCT DETOURS (CL 3)	M2	

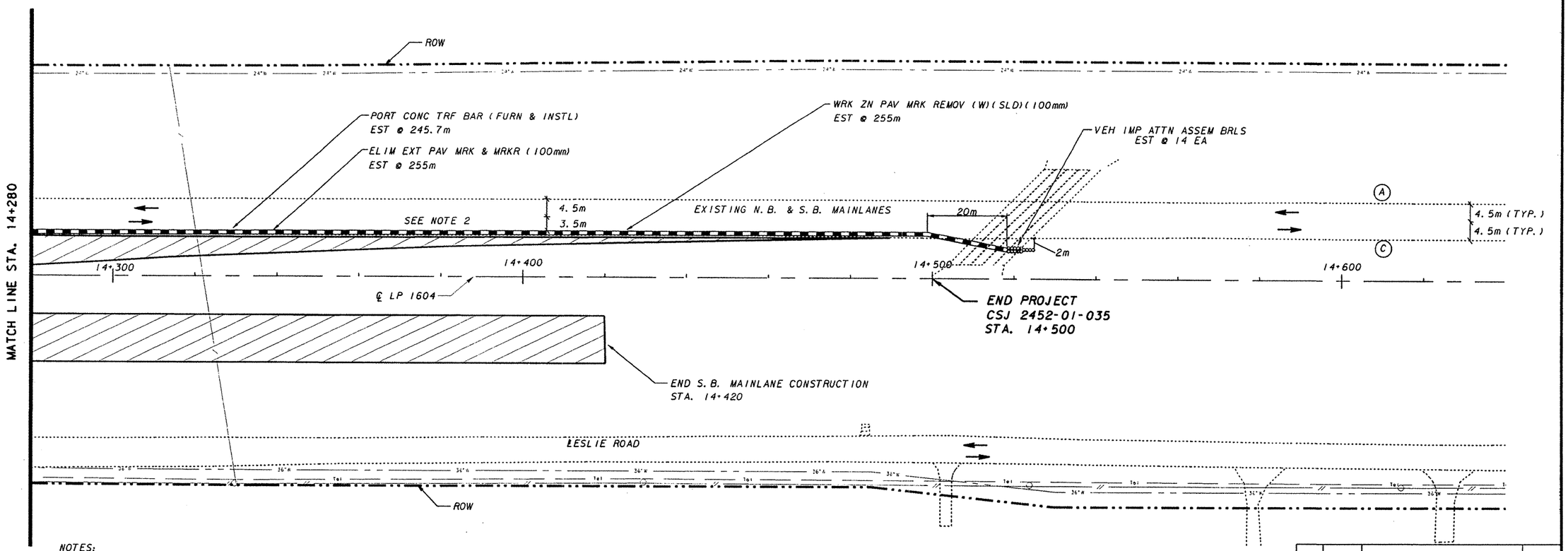

NOTES:

1. THE CONTRACTOR SHALL USE TEMPORARY LANE CLOSURE DETAIL TCP(2-1) FOR REMOVAL/CONSTRUCTION.
2. THE CONTRACTOR SHALL UTILIZE EXISTING PAVEMENT MARKINGS UNLESS OTHERWISE NOTED.
3. CONTRACTOR SHALL UTILIZE FLAGGER CONTROL AND APPROPRIATE ADVANCE SIGNING WHEN TIEING INTO EXISTING PAVEMENT WITH TEMPORARY PAVEMENT.
4. ALL DRUMS, BARRICADES, WARNING LIGHTS, AND CONSTRUCTION SIGNING ARE TO BE PROVIDED BY THE CONTRACTOR AND ARE SUBSIDIARY TO ITEM 502.
5. THE CONTRACTOR SHALL USE BLACK BASE ON ALL DETOURS AND AT BRAUN ROAD, NEW GUILBEAU, BOWENS CROSSING, AND SHAENFIELD INTERSECTIONS. SEE INTERSECTION LAYOUTS FOR LIMITS OF BLACK BASE. ASPHALT SHALL BE PLACED BETWEEN BLACK BASE AND TOP OF EXISTING PAVEMENT AT 3:1 SLOPE. ASPHALT SLOPE SHALL BE USED BETWEEN PLACEMENT OF EACH LIFT OF BLACK BASE IF BOTH LIFTS CANNOT BE COMPLETED IN ONE (1) DAY. SLOPE SHALL BE REMOVED PRIOR TO PLACEMENT OF SECOND LIFT.

STATE OF TEXAS
BRENT L. CHRISTIAN
73921
REGISTERED PROFESSIONAL ENGINEER

Brent L. Christian
5/5/97

NO.	DATE	REVISION	APPROV.

Texas Department of Transportation
LOOP 1604

SEQUENCE OF WORK
PHASE 1
STA. 14+280 TO END OF PROJECT

SHEET 16 OF 16

Kimley-Horn and Associates, Inc.

Designed	REK	DIST	FED REG	FEDERAL AID PROJECT				HIGHWAY
Checked	BLC	15	6					LP1604
Drawn	REK	COUNTY		CONTROL	SECT	JOB		SHEET
Checked	BLC	BEXAR		2452	01	035		81

LEVELS DISPLAYED
1 2 3 4 5 6 7 8 9 10 11 12 13 14 15 16
17 18 19 20 21 22 23 24 25 26 27 28 29 30 31 32
33 34 35 36 37 38 39 40 41 42 43 44 45 46 47 48
49 50 51 52 53 54 55 56 57 58 59 60 61 62 63

H:\DRAWINGS\6731603\TCP\604TPC14.DGN

LEGEND

- CONCRETE TRAFFIC BARRIER (CTB)
- VIA (SFPM)
- CONSTRUCTION SIGN
- TRAFFIC FLOW DIRECTION
- DRAINAGE CONSTRUCTION
- (X) SEE SCHEDULE OF BARRICADES
- TO BE REMOVED
- DETOUR
- NEW ROADWAY PAVEMENT
- DRUMS WITH TYPE C WARNING LIGHTS

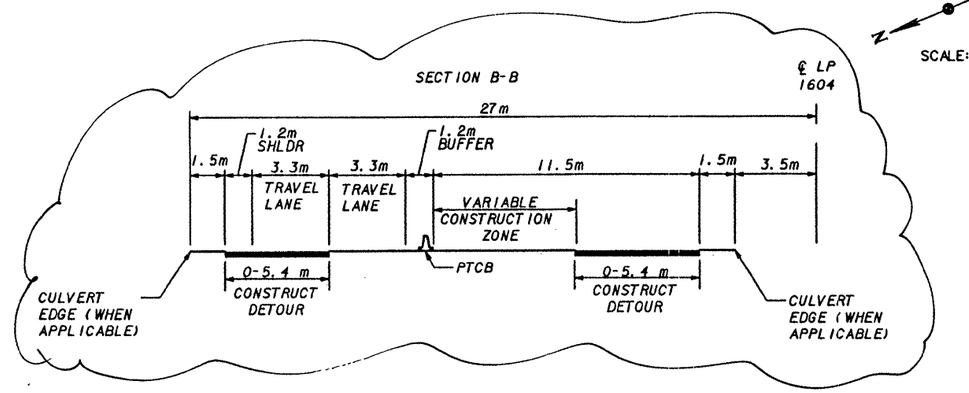

SCALE: 1:1000

ESTIMATED QUANTITIES		
ITEM	UNIT	QTY
WRK ZN PAV MRK REMOV (W)(SLD)(100mm)	M	719
WRK ZN PAV MRK REMOV (W)(BRK)(100mm)	M	
WRK ZN PAV MRK REMOV (Y)(SLD)(100mm)	M	719
WRK ZN PAV MRK NON-REMV (W)(SLD)(100mm)	M	
WRK ZN PAV MRK NON-REMV (W)(BRK)(100mm)	M	
WRK ZN PAV MRK NON-REMV (Y)(SLD)(100mm)	M	
ELIM EXT PAV MRK & MRKR (100mm)	M	360
VEH IMP ATTN ASSEM BRLS (PLACE)	EA	
VEH IMP ATTN ASSEM BRLS (MOVE & RESET)	EA	
VEH IMP ATTN ASSEM BRLS (REMOVE)	EA	
RAIS PAV MRKR CL B (REFL) TY II-C-R	EA	
PORT CONC TRF BAR (FURN & INSTL)	M	364
PORT CONC TRF BAR (MOVE & RESET)	M	
PORT CONC TRF BAR (REMOVE)	M	364
CONSTRUCT DETOURS (CL 3)	M2	4485.5

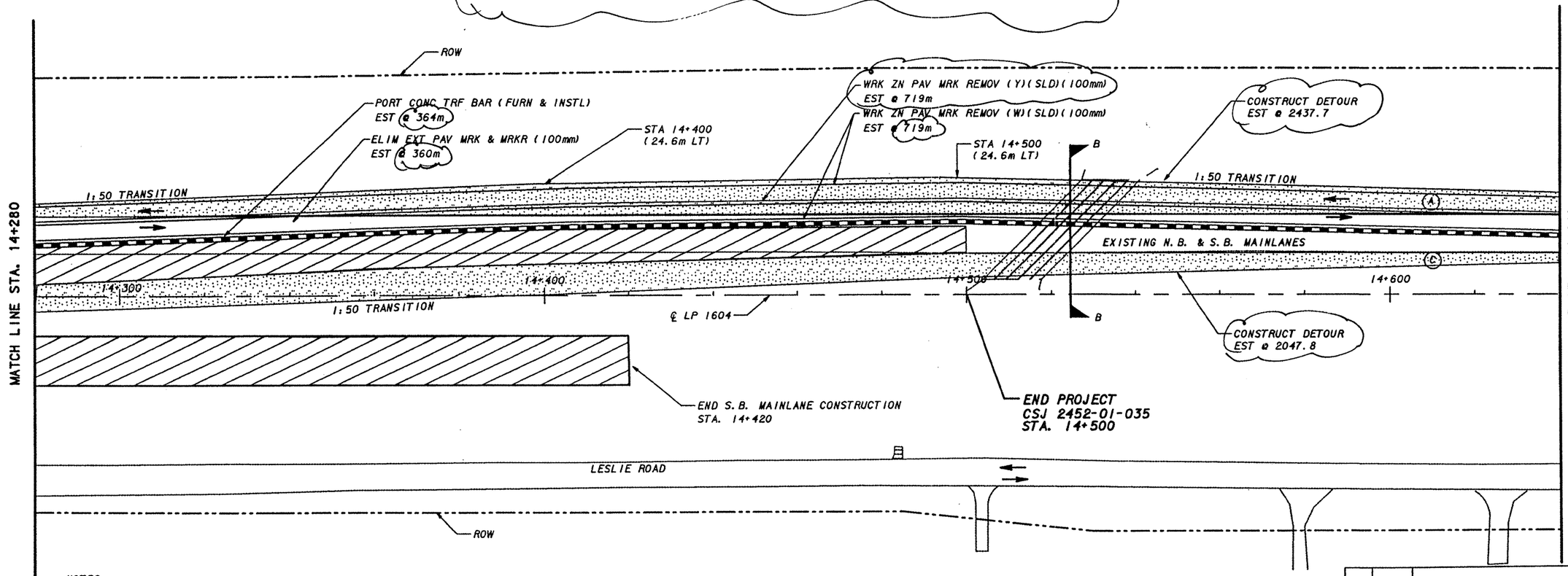

NOTES:

1. THE CONTRACTOR SHALL USE TEMPORARY LANE CLOSURE DETAIL TCP(2-1) FOR REMOVAL/CONSTRUCTION.
2. THE CONTRACTOR SHALL UTILIZE EXISTING PAVEMENT MARKINGS UNLESS OTHERWISE NOTED.
3. CONTRACTOR SHALL UTILIZE FLAGGER CONTROL AND APPROPRIATE ADVANCE SIGNING WHEN TIEING INTO EXISTING PAVEMENT WITH TEMPORARY PAVEMENT.
4. ALL DRUMS, BARRICADES, WARNING LIGHTS, AND CONSTRUCTION SIGNING ARE TO BE PROVIDED BY THE CONTRACTOR AND ARE SUBSIDIARY TO ITEM 502.
5. THE CONTRACTOR SHALL USE BLACK BASE ON ALL DETOURS AND AT BRAUN ROAD, NEW GUILBEAU, BOWENS CROSSING, AND SHAENFIELD INTERSECTIONS. SEE INTERSECTION LAYOUTS FOR LIMITS OF BLACK BASE. ASPHALT SHALL BE PLACED BETWEEN BLACK BASE AND TOP OF EXISTING PAVEMENT AT 3:1 SLOPE. ASPHALT SLOPE SHALL BE USED BETWEEN PLACEMENT OF EACH LIFT OF BLACK BASE IF BOTH LIFTS CANNOT BE COMPLETED IN ONE (1) DAY. SLOPE SHALL BE REMOVED PRIOR TO PLACEMENT OF SECOND LIFT.

CO#6

STATE OF TEXAS — BRENT L. CHRISTIAN 73921 — REGISTERED PROFESSIONAL ENGINEER

Brent L. Christian
4-20-98

NO.	DATE	REVISION	APPROV.

Texas Department of Transportation
LOOP 1604

SEQUENCE OF WORK
PHASE 1
STA. 14+280 TO STA 14+640

SHEET 16 OF 16

Kimley-Horn and Associates, Inc.

Designed	REX	DIST	FED REG	FEDERAL AID PROJECT					HIGHWAY
Checked	MLC	15	6	CO 2452-1-35					LP1604
Drawn	REX	COUNTY		CONTROL	SECT	JOB			SHEET
Checked	MLC	BEXAR		2452	01	035			81

LEVELS DISPLAYED
1 2 3 4 5 6 7 8 9 10 11 12 13 14 15 16
17 18 19 20 21 22 23 24 25 26 27 28 29 30 31 32
33 34 35 36 37 38 39 40 41 42 43 44 45 46 47 48
49 50 51 52 53 54 55 56 57 58 59 60 61 62 63

H:\DRAWINGS\6731603\TCP\604TPR14.DGN

LEGEND

- CONCRETE TRAFFIC BARRIER (CTB)
- VIA (SFPM)
- CONSTRUCTION SIGN
- TRAFFIC FLOW DIRECTION
- DRAINAGE CONSTRUCTION
- SEE SCHEDULE OF BARRICADES
- TO BE REMOVED
- DETOUR
- NEW ROADWAY PAVEMENT
- DRUMS WITH TYPE C WARNING LIGHTS

SCALE: 1:1000

ESTIMATED QUANTITIES		
ITEM	UNIT	QTY
WRK ZN PAV MRK REMOV (W)(SLD)(100mm)	M	260
WRK ZN PAV MRK REMOV (W)(BRK)(100mm)	M	
WRK ZN PAV MRK REMOV (Y)(SLD)(100mm)	M	260
WRK ZN PAV MRK NON-REMV (W)(SLD)(100mm)	M	
WRK ZN PAV MRK NON-REMV (W)(BRK)(100mm)	M	
WRK ZN PAV MRK NON-REMV (Y)(SLD)(100mm)	M	
ELIM EXT PAV MRK & MRKR (100mm)	M	520
VEH IMP ATTN ASSEM BRLS (PLACE)	EA	14
VEH IMP ATTN ASSEM BRLS (MOVE & RESET)	EA	
VEH IMP ATTN ASSEM BRLS (REMOVE)	EA	14
RAIS PAV MRKR CL B (REFL) TY II-C-R	EA	
PORT CONC TRF BAR (FURN & INSTL)	M	145.6
PORT CONC TRF BAR (MOVE & RESET)	M	
PORT CONC TRF BAR (REMOVE)	M	145.6
CONSTRUCT DETOURS (CL 3)	M2	567.6

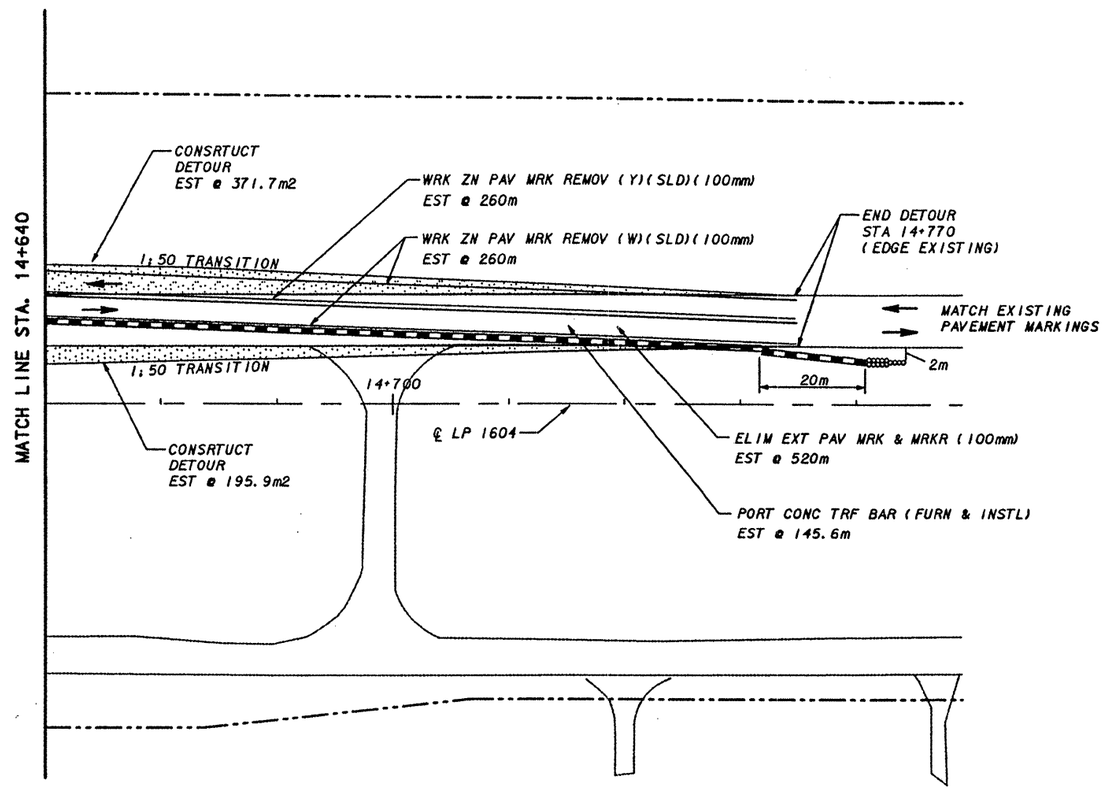

NOTES:

1. THE CONTRACTOR SHALL USE TEMPORARY LANE CLOSURE DETAIL TCP(2-1) FOR REMOVAL/CONSTRUCTION.
2. THE CONTRACTOR SHALL UTILIZE EXISTING PAVEMENT MARKINGS UNLESS OTHERWISE NOTED.
3. CONTRACTOR SHALL UTILIZE FLAGGER CONTROL AND APPROPRIATE ADVANCE SIGNING WHEN TIEING INTO EXISTING PAVEMENT WITH TEMPORARY PAVEMENT.
4. ALL DRUMS, BARRICADES, WARNING LIGHTS, AND CONSTRUCTION SIGNING ARE TO BE PROVIDED BY THE CONTRACTOR AND ARE SUBSIDIARY TO ITEM 502.
5. THE CONTRACTOR SHALL USE BLACK BASE ON ALL DETOURS AND AT BRAUN ROAD, NEW GUILBEAU, BOWENS CROSSING, AND SHAENFIELD INTERSECTIONS. SEE INTERSECTION LAYOUTS FOR LIMITS OF BLACK BASE. ASPHALT SHALL BE PLACED BETWEEN BLACK BASE AND TOP OF EXISTING PAVEMENT AT 3:1 SLOPE. ASPHALT SLOPE SHALL BE USED BETWEEN PLACEMENT OF EACH LIFT OF BLACK BASE IF BOTH LIFTS CANNOT BE COMPLETED IN ONE (1) DAY. SLOPE SHALL BE REMOVED PRIOR TO PLACEMENT OF SECOND LIFT.

STATE OF TEXAS
BRENT L. CHRISTIAN
73921
REGISTERED PROFESSIONAL ENGINEER

NEW SHEET
CO#6

Brent L. Christian
4-20-98

NO.	DATE	REVISION	APPROV.

Texas Department of Transportation
LOOP 1604

SEQUENCE OF WORK
PHASE 1
STA 14+640 TO STA 14+770

ADDITIONAL SHEET 17

Kimley-Horn and Associates, Inc.

Designed	REX	DIST	FED REG	FEDERAL AID PROJECT			HIGHWAY
Checked	BLC	15	6	CD2452-1-35			LP1604
Drawn	REX	COUNTY		CONTROL	SECT	JOB	SHEET
Checked	BLC	BEXAR		2452	01	035	81B

H:\DRAWINGS\6731603\TCP\604TP .DGN

NOTES:

1. THE CONTRACTOR SHALL MAINTAIN TRAFFIC SIGNAL OPERATION AT ALL TIMES DURING CONSTRUCTION AT BRAUN ROAD.
2. THE TEMPORARY TRAFFIC SIGNAL SHALL BE COMPLETELY OPERATIONAL PRIOR TO THE REMOVAL OF THE EXISTING TRAFFIC SIGNAL
3. TEMPORARY TRAFFIC SIGNAL HEADS SHALL NOT BE VISIBLE TO TRAFFIC UNTIL THE SYSTEM IS OPERATIONAL AND THE EXISTING SIGNAL HEADS ARE NOT OPERATIONAL
4. VIVDS DETECTION WILL BE USED ON ALL INTERSECTION APPROACHES. SEE 'VIVDS DETAILS' LAYOUT.
5. VIVDS EQUIPMENT SHALL PROVIDE LEFT TURN AND THROUGH MOVEMENT DETECTION.
6. VIVDS INSTALLATION SHALL FOLLOW MANUFACTURER'S RECOMMENDED MOUNTING GUIDELINES FOR OPTIMAL DETECTION.
7. EACH VIVDS DETECTOR UNIT SHALL INCLUDE ALL MOUNTING EQUIPMENT, POWER AND DATA CABLES.
8. 20 METERS OF EACH SIGNAL CABLE SHALL BE COILED AT TOP OF POLE FOR ADJUSTMENT OF SIGNAL HEADS DURING CONSTRUCTION. CONTRACTOR SHALL ADJUST HEADS TO MAINTAIN SIGAL HEAD ALIGNMENT WITH CENTER OF RESPECTIVE LANE.

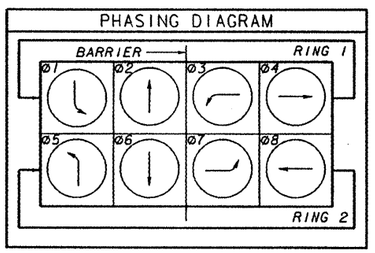

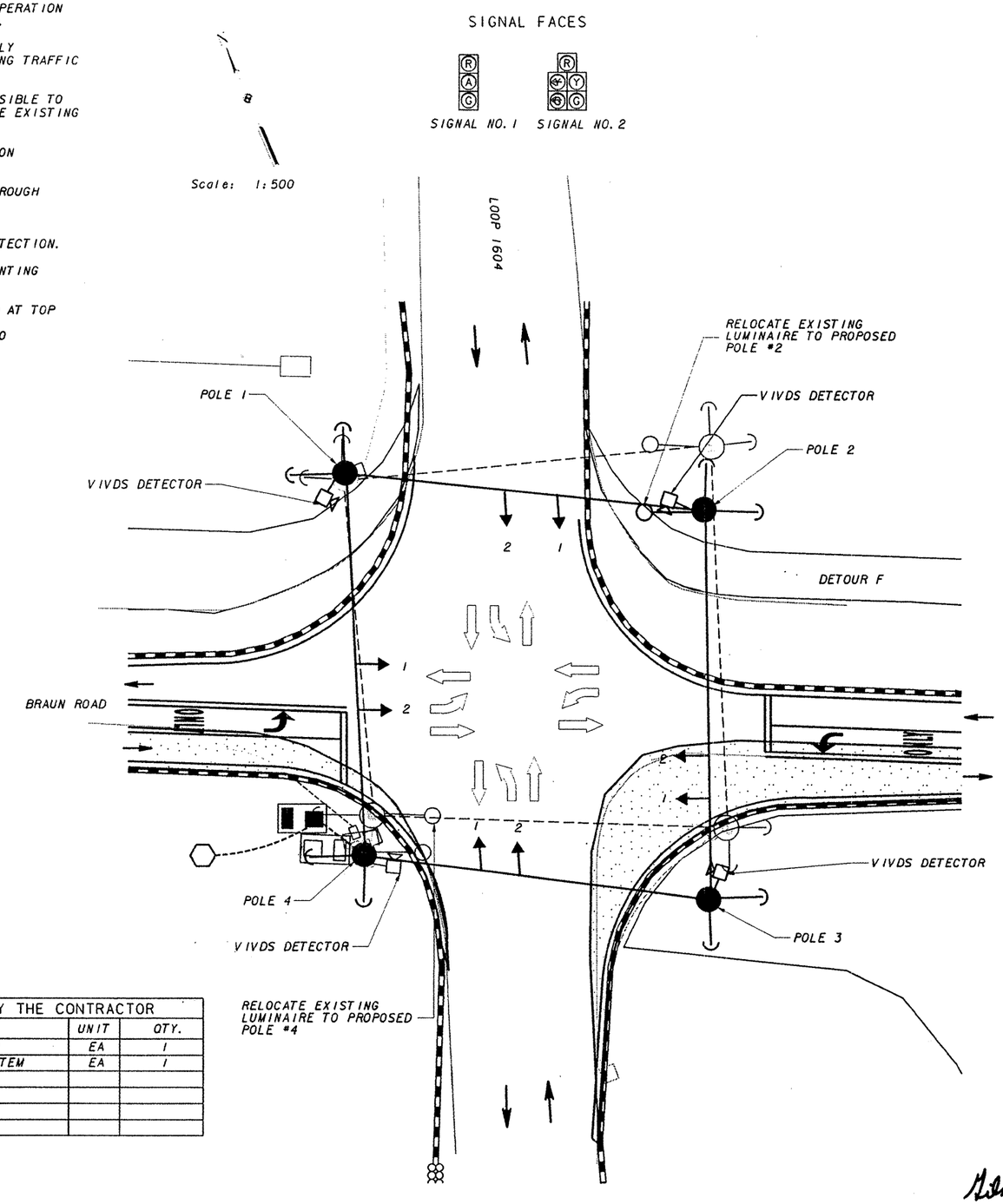

LEGEND

- EXIST. NEMA 2 PHASE CABINET
- PROP. TEMPORARY CONTROLLER CABINET
- EXIST. WOOD TRAFFIC POLE W\ GUY WIRE
- EXIST. LUMINAIRE
- EXIST. PULL BOX
- EXIST. CONDUIT
- PROP. CONDUIT
- EXIST. SPAN WIRE
- PROP. WOOD POLE WITH GUY
- PROP. SIGNAL FACE
- EXISTING POWER SERVICE
- VIVDS DETECTOR

MATERIALS TO BE FURNISHED & INSTALLED BY THE CONTRACTOR

ITEM	DESC. NO.	DESCRIPTION	UNIT	QTY.
681	5001	TEMP TRAF SIGNALS FOR CONSTRUCTION	EA	1
6116	5006	VISUAL IMAGE VEHICLE DETECTION SYSTEM	EA	1

STATE OF TEXAS
GILMER D. GASTON
80472
REGISTERED PROFESSIONAL ENGINEER

Gilmer D. Gaston
5/6/97

NO.	DATE	REVISION	APPROV.

Texas Department of Transportation
LOOP 1604

SEQUENCE OF WORK
BRAUN ROAD
TEMPORARY TRAFFIC SIGNAL LAYOUT

SHEET 1 OF 1

Kimley-Horn and Associates, Inc.

Designed	HP	DIST	FED REG	FEDERAL AID PROJECT			HIGHWAY
Checked	JJ	15	6				LP1604
Drawn	HP	COUNTY		CONTROL	SECT	JOB	SHEET
Checked	GDG	BEXAR		2452	01	035	82

LEVELS DISPLAYED

H:\DRAWINGS\6731603\30\BRNCONST.DGN

LEGEND

- CONCRETE TRAFFIC BARRIER (CTB)
- VIA (SFPM)
- CONSTRUCTION SIGN
- TRAFFIC FLOW DIRECTION
- DRAINAGE CONSTRUCTION
- (X) SEE SCHEDULE OF BARRICADES
- TO BE REMOVED
- DETOUR
- NEW ROADWAY PAVEMENT
- DRUMS WITH TYPE C WARNING LIGHTS

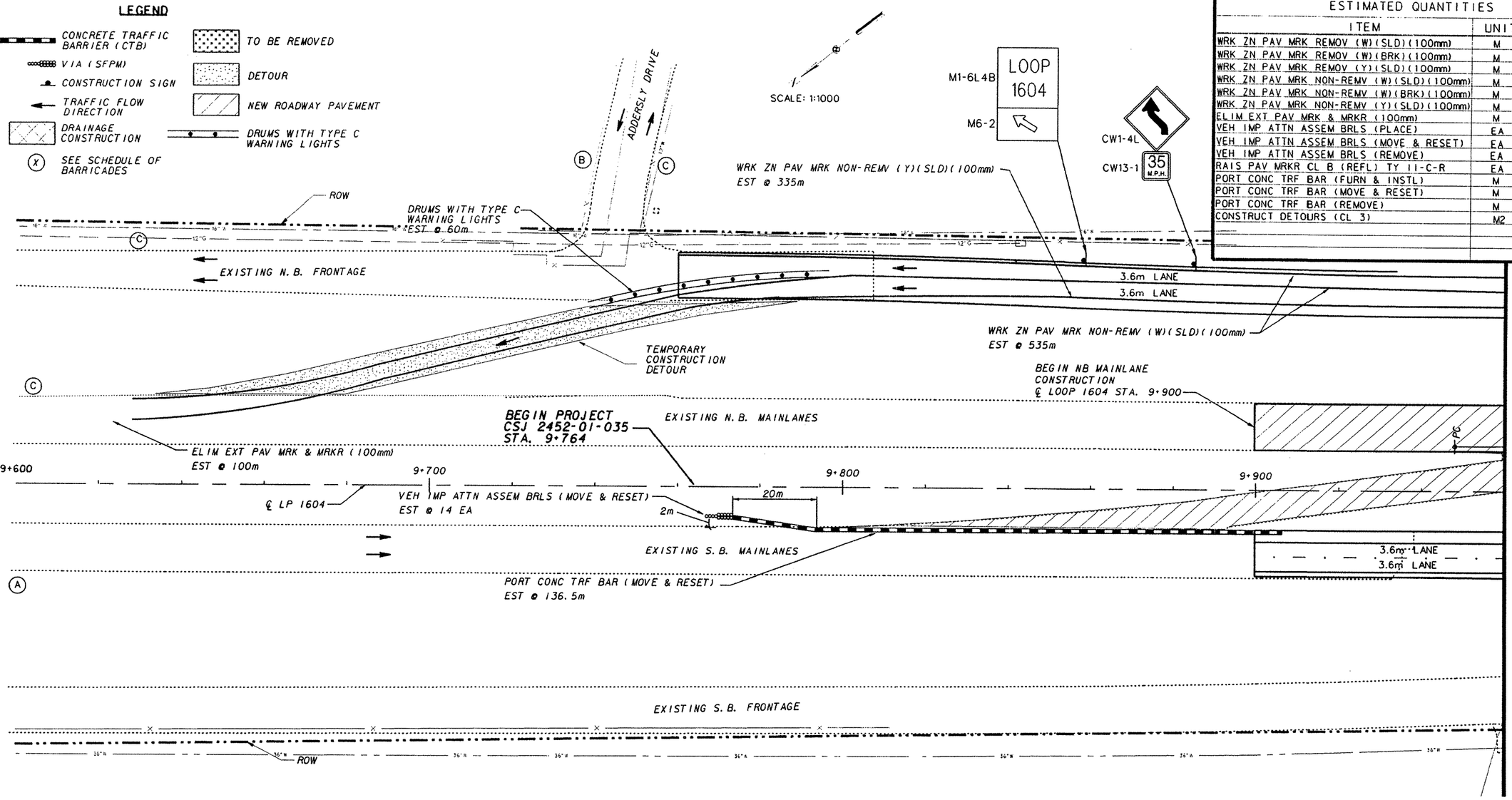

ESTIMATED QUANTITIES

ITEM	UNIT	QTY
WRK ZN PAV MRK REMOV (W)(SLD)(100mm)	M	
WRK ZN PAV MRK REMOV (W)(BRK)(100mm)	M	
WRK ZN PAV MRK REMOV (Y)(SLD)(100mm)	M	
WRK ZN PAV MRK NON-REMV (W)(SLD)(100mm)	M	535
WRK ZN PAV MRK NON-REMV (W)(BRK)(100mm)	M	
WRK ZN PAV MRK NON-REMV (Y)(SLD)(100mm)	M	335
ELIM EXT PAV MRK & MRKR (100mm)	M	100
VEH IMP ATTN ASSEM BRLS (PLACE)	EA	
VEH IMP ATTN ASSEM BRLS (MOVE & RESET)	EA	14
VEH IMP ATTN ASSEM BRLS (REMOVE)	EA	14
RAIS PAV MRKR CL B (REFL) TY II-C-R	EA	
PORT CONC TRF BAR (FURN & INSTL)	M	
PORT CONC TRF BAR (MOVE & RESET)	M	136.5
PORT CONC TRF BAR (REMOVE)	M	136.5
CONSTRUCT DETOURS (CL 3)	M2	

NOTES:

1. THE CONTRACTOR SHALL USE TEMPORARY LANE CLOSURE DETAIL TCP(2-1) FOR REMOVAL/CONSTRUCTION.
2. THE CONTRACTOR SHALL UTILIZE EXISTING PAVEMENT MARKINGS UNLESS OTHERWISE NOTED.
3. CONTRACTOR SHALL UTILIZE FLAGGER CONTROL AND APPROPRIATE ADVANCE SIGNING WHEN TIEING INTO EXISTING PAVEMENT WITH TEMPORARY PAVEMENT.
4. ALL DRUMS, BARRICADES, WARNING LIGHTS, AND CONSTRUCTION SIGNING ARE TO BE PROVIDED BY THE CONTRACTOR AND ARE SUBSIDIARY TO ITEM 502.
5. THE CONTRACTOR SHALL USE BLACK BASE ON ALL DETOURS AND AT BRAUN ROAD, NEW GUILBEAU, BOWENS CROSSING, AND SHAENFIELD INTERSECTIONS. SEE INTERSECTION LAYOUTS FOR LIMITS OF BLACK BASE. ASPHALT SHALL BE PLACED BETWEEN BLACK BASE AND TOP OF EXISTING PAVEMENT AT 3:1 SLOPE. ASPHALT SLOPE SHALL BE USED BETWEEN PLACEMENT OF EACH LIFT OF BLACK BASE IF BOTH LIFTS CANNOT BE COMPLETED IN ONE (1) DAY. SLOPE SHALL BE REMOVED PRIOR TO PLACEMENT OF SECOND LIFT.
6. PERMANENT PAVEMENT MARKING WILL BE INSTALLED IN ACCORDANCE WITH THE PAVEMENT MARKINGS & DELINEATION LAYOUT FOR S.B. MAIN LANES FROM STA. 9+900 TO STA. 9+960.

NO.	DATE	REVISION	APPROV.

Texas Department of Transportation
LOOP 1604

SEQUENCE OF WORK
PHASE 2
BEGIN PROJECT TO STA. 9+960

SHEET 1 OF 15

STATE OF TEXAS — BRENT L. CHRISTIAN 73921 — REGISTERED PROFESSIONAL ENGINEER
Brent L. Christian
5/5/97

Kimley-Horn and Associates, Inc.

Designed	REK	DIST	FED REG	FEDERAL AID PROJECT				HIGHWAY
Checked	BLC	15	6					LP1604
Drawn	REK	COUNTY			CONTROL	SECT	JOB	SHEET
Checked	BLC	BEXAR			2452	01	035	83

H:\DRAWINGS\6731603\TCP\6047P201.DGN

LEVELS DISPLAYED
1 2 3 4 5 6 7 8 9 10 11 12 13 14 15 16
17 18 19 20 21 22 23 24 25 26 27 28 29 30 31 32
33 34 35 36 37 38 39 40 41 42 43 44 45 46 47 48
49 50 51 52 53 54 55 56 57 58 59 60 61 62 63

LEGEND

- CONCRETE TRAFFIC BARRIER (CTB)
- VIA (SFPM)
- CONSTRUCTION SIGN
- TRAFFIC FLOW DIRECTION
- DRAINAGE CONSTRUCTION
- (X) SEE SCHEDULE OF BARRICADES
- TO BE REMOVED
- DETOUR
- NEW ROADWAY PAVEMENT
- DRUMS WITH TYPE C WARNING LIGHTS

SCALE: 1:1000

ESTIMATED QUANTITIES

ITEM	UNIT	QTY
WRK ZN PAV MRK REMOV (W)(SLD)(100mm)	M	
WRK ZN PAV MRK REMOV (W)(BRK)(100mm)	M	
WRK ZN PAV MRK REMOV (Y)(SLD)(100mm)	M	
WRK ZN PAV MRK NON-REMV (W)(SLD)(100mm)	M	360
WRK ZN PAV MRK NON-REMV (W)(BRK)(100mm)	M	360
WRK ZN PAV MRK NON-REMV (Y)(SLD)(100mm)	M	360
ELIM EXT PAV MRK & MRKR (100mm)	M	
VEH IMP ATTN ASSEM BRLS (PLACE)	EA	
VEH IMP ATTN ASSEM BRLS (MOVE & RESET)	EA	
VEH IMP ATTN ASSEM BRLS (REMOVE)	EA	
RAIS PAV MRKR CL B (REFL) TY II-C-R	EA	29
PORT CONC TRF BAR (FURN & INSTL)	M	
PORT CONC TRF BAR (MOVE & RESET)	M	72.8
PORT CONC TRF BAR (REMOVE)	M	72.8
CONSTRUCT DETOURS (CL 3)	M2	

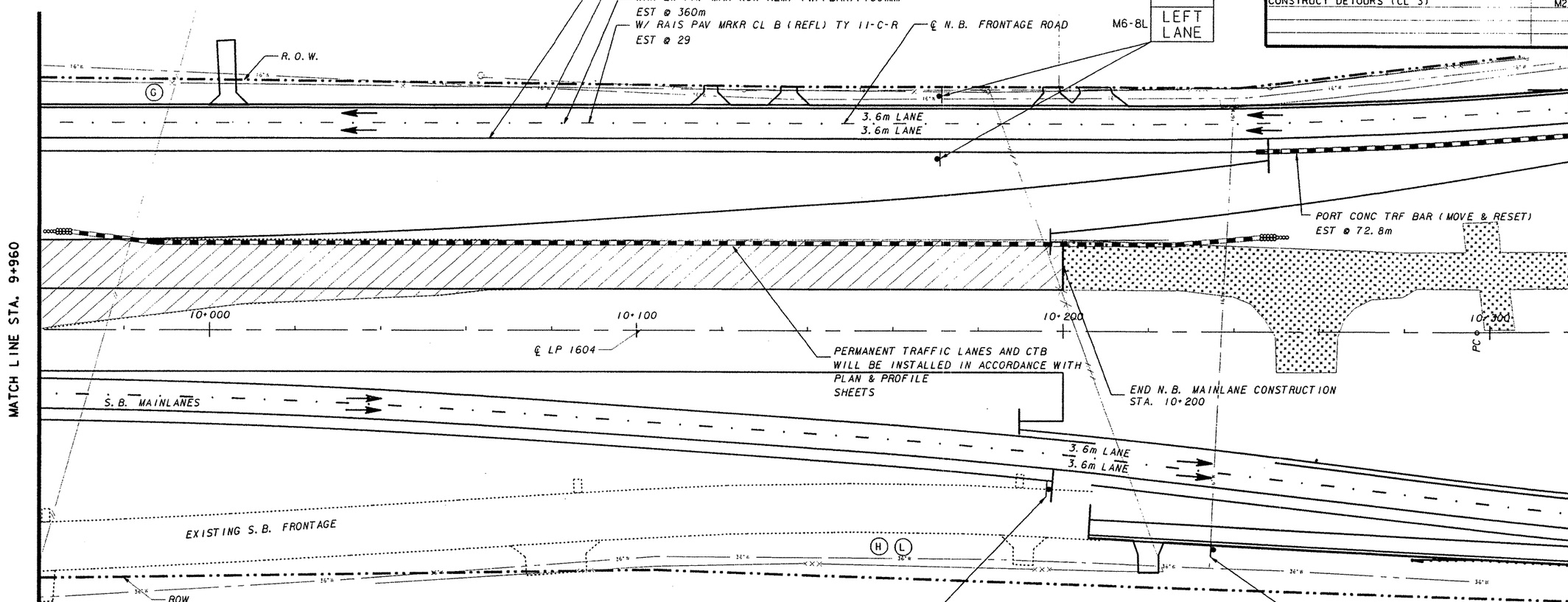

NOTES:

1. THE CONTRACTOR SHALL USE TEMPORARY LANE CLOSURE DETAIL TCP(2-1) FOR REMOVAL/CONSTRUCTION.
2. THE CONTRACTOR SHALL UTILIZE EXISTING PAVEMENT MARKINGS UNLESS OTHERWISE NOTED.
3. CONTRACTOR SHALL UTILIZE FLAGGER CONTROL AND APPROPRIATE ADVANCE SIGNING WHEN TIEING INTO EXISTING PAVEMENT WITH TEMPORARY PAVEMENT.
4. ALL DRUMS, BARRICADES, WARNING LIGHTS, AND CONSTRUCTION SIGNING ARE TO BE PROVIDED BY THE CONTRACTOR AND ARE SUBSIDIARY TO ITEM 502.
5. PERMANENT CONCRETE TRAFFIC BARRIER WILL BE INSTALL IN ACCORDANCE WITH ROADWAY PLANS.
6. THE CONTRACTOR SHALL USE BLACK BASE ON ALL DETOURS AND AT BRAUN ROAD, NEW GUILBEAU, BOWENS CROSSING, AND SHAENFIELD INTERSECTIONS. SEE INTERSECTION LAYOUTS FOR LIMITS OF BLACK BASE. ASPHALT SHALL BE PLACED BETWEEN BLACK BASE AND TOP OF EXISTING PAVEMENT AT 3:1 SLOPE. ASPHALT SLOPE SHALL BE USED BETWEEN PLACEMENT OF EACH LIFT OF BLACK BASE IF BOTH LIFTS CANNOT BE COMPLETED IN ONE (1) DAY. SLOPE SHALL BE REMOVED PRIOR TO PLACEMENT OF SECOND LIFT.
7. PERMANENT PAVEMENT MARKING WILL BE INSTALLED IN ACCORDANCE WITH THE PAVEMENT MARKINGS & DELINEATION LAYOUT FOR S.B. MAINLANES AND S.B. FRONTAGE ROAD FROM STA. 9+960 TO STA. 10+320.

STATE OF TEXAS
BRENT L. CHRISTIAN
73921
REGISTERED PROFESSIONAL ENGINEER

Brent Christian
5/5/97

NO.	DATE	REVISION	APPROV.

Texas Department of Transportation
LOOP 1604

SEQUENCE OF WORK
PHASE 2
STA. 9+960 TO STA. 10+320

SHEET 2 OF 15

Kimley-Horn and Associates, Inc.

Designed	REK	DIST	FED REG	FEDERAL AID PROJECT				HIGHWAY
Checked	BLC	15	6					LP1604
Drawn	REK	COUNTY		CONTROL	SECT	JOB		SHEET
Checked	BLC	BEXAR		2452	01	035		84

LEVELS DISPLAYED	
1 2 3 4 5 6 7 8 9 10 11 12 13 14 15 16	
17 18 19 20 21 22 23 24 25 26 27 28 29 30 31 32	
33 34 35 36 37 38 39 40 41 42 43 44 45 46 47 48	
49 50 51 52 53 54 55 56 57 58 59 60 61 62 63	

H:\DRAWINGS\673160 3\TCP\604TP202.DGN

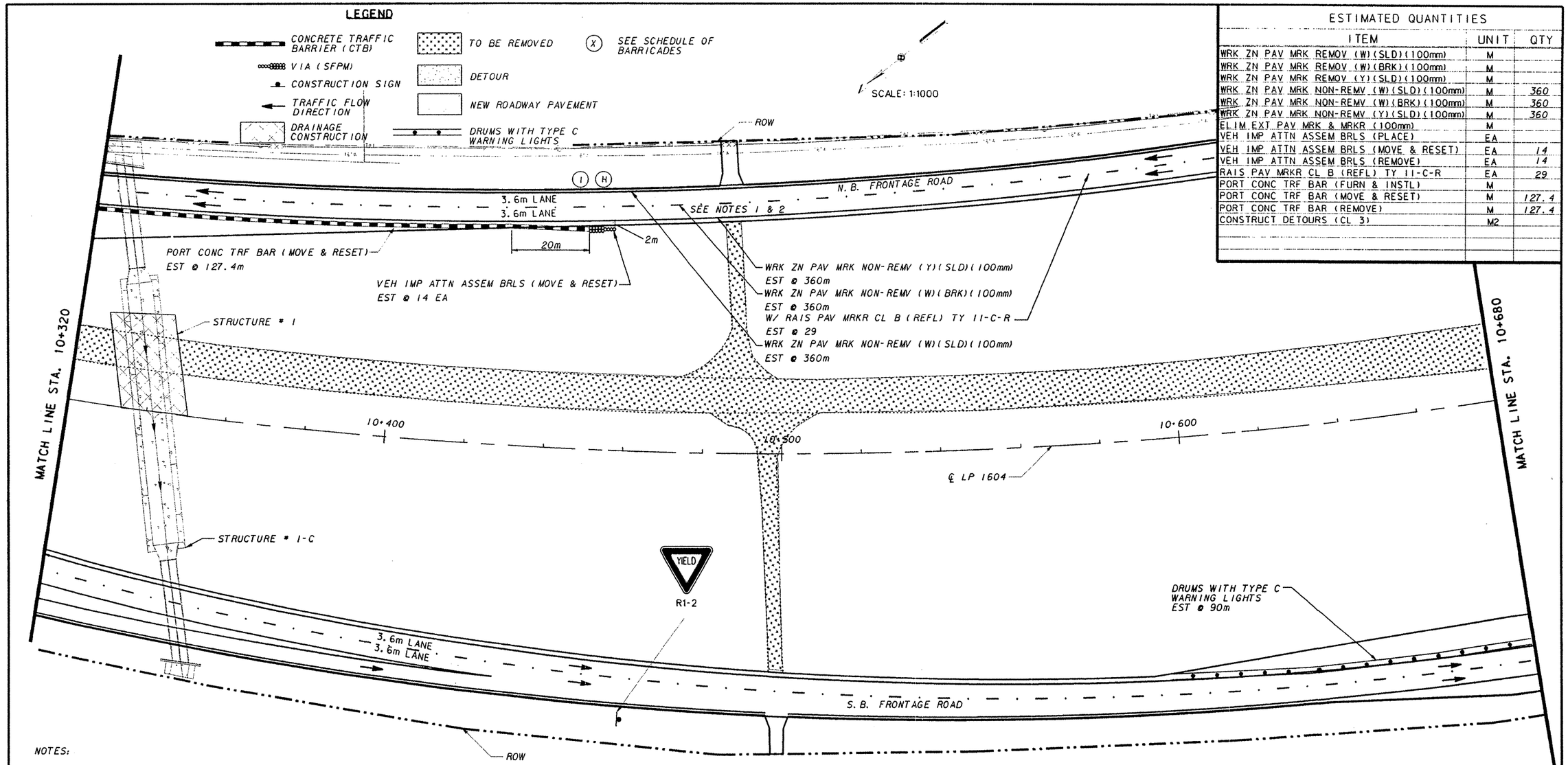

ESTIMATED QUANTITIES

ITEM	UNIT	QTY
WRK ZN PAV MRK REMOV (W)(SLD)(100mm)	M	
WRK ZN PAV MRK REMOV (W)(BRK)(100mm)	M	
WRK ZN PAV MRK REMOV (Y)(SLD)(100mm)	M	
WRK ZN PAV MRK NON-REMV (W)(SLD)(100mm)	M	360
WRK ZN PAV MRK NON-REMV (W)(BRK)(100mm)	M	360
WRK ZN PAV MRK NON-REMV (Y)(SLD)(100mm)	M	360
ELIM EXT PAV MRK & MRKR (100mm)	M	
VEH IMP ATTN ASSEM BRLS (PLACE)	EA	
VEH IMP ATTN ASSEM BRLS (MOVE & RESET)	EA	14
VEH IMP ATTN ASSEM BRLS (REMOVE)	EA	14
RAIS PAV MRKR CL B (REFL) TY II-C-R	EA	29
PORT CONC TRF BAR (FURN & INSTL)	M	
PORT CONC TRF BAR (MOVE & RESET)	M	127.4
PORT CONC TRF BAR (REMOVE)	M	127.4
CONSTRUCT DETOURS (CL 3)	M2	

NOTES:

1. THE CONTRACTOR SHALL USE TEMPORARY LANE CLOSURE DETAIL TCP(2-1) FOR REMOVAL/CONSTRUCTION.
2. THE CONTRACTOR SHALL UTILIZE EXISTING PAVEMENT MARKINGS UNLESS OTHERWISE NOTED.
3. CONTRACTOR SHALL UTILIZE FLAGGER CONTROL AND APPROPRIATE ADVANCE SIGNING WHEN TIEING INTO EXISTING PAVEMENT WITH TEMPORARY PAVEMENT.
4. ALL DRUMS, BARRICADES, WARNING LIGHTS, AND CONSTRUCTION SIGNING ARE TO BE PROVIDED BY THE CONTRACTOR AND ARE SUBSIDIARY TO ITEM 502.
5. THE CONTRACTOR SHALL USE BLACK BASE ON ALL DETOURS AND AT BRAUN ROAD, NEW GUILBEAU, BOWENS CROSSING, AND SHAENFIELD INTERSECTIONS. SEE INTERSECTION LAYOUTS FOR LIMITS OF BLACK BASE. ASPHALT SHALL BE PLACED BETWEEN BLACK BASE AND TOP OF EXISTING PAVEMENT AT 3:1 SLOPE. ASPHALT SLOPE SHALL BE USED BETWEEN PLACEMENT OF EACH LIFT OF BLACK BASE IF BOTH LIFTS CANNOT BE COMPLETED IN ONE (1) DAY. SLOPE SHALL BE REMOVED PRIOR TO PLACEMENT OF SECOND LIFT.
6. PERMANENT PAVEMENT MARKING WILL BE INSTALLED IN ACCORDANCE WITH THE PAVEMENT MARKINGS & DELINEATION LAYOUT FOR S.B. FRONTAGE ROAD FROM STA. 10+320 TO STA. 10+680

NO.	DATE	REVISION	APPROV.

Texas Department of Transportation
LOOP 1604

SEQUENCE OF WORK
PHASE 2
STA. 10+320 TO STA. 10+680

SHEET 3 OF 15

Kimley-Horn and Associates, Inc.

STATE OF TEXAS
BRENT L. CHRISTIAN
73921
REGISTERED
PROFESSIONAL ENGINEER

Brent L. Christian
5/5/97

Designed	REK	DIST	FED REG	FEDERAL AID PROJECT #			HIGHWAY
Checked	BLC	15	6				LP1604
Drawn	REK	COUNTY		CONTROL	SECT	JOB	SHEET
Checked	BLC	BEXAR		2452	01	035	85

LEVELS DISPLAYED
1 2 3 4 5 6 7 8 9 10 11 12 13 14 15 16
17 18 19 20 21 22 23 24 25 26 27 28 29 30 31 32
33 34 35 36 37 38 39 40 41 42 43 44 45 46 47 48
49 50 51 52 53 54 55 56 57 58 59 60 61 62 63

H:\DRAWINGS\673603\TCP\604TP203.DGN

ESTIMATED QUANTITIES

ITEM	UNIT	QTY
WRK ZN PAV MRK REMOV (W)(SLD)(100mm)	M	235
WRK ZN PAV MRK REMOV (W)(BRK)(100mm)	M	133
WRK ZN PAV MRK REMOV (Y)(SLD)(100mm)	M	
WRK ZN PAV MRK NON-REMV (W)(SLD)(100mm)	M	
WRK ZN PAV MRK NON-REMV (W)(BRK)(100mm)	M	
WRK ZN PAV MRK NON-REMV (Y)(SLD)(100mm)	M	
ELIM EXT PAV MRK & MRKR (100mm)	M	
VEH IMP ATTN ASSEM BRLS (PLACE)	EA	
VEH IMP ATTN ASSEM BRLS (MOVE & RESET)	EA	
VEH IMP ATTN ASSEM BRLS (REMOVE)	EA	
RAIS PAV MRKR CL B (REFL) TY 11-C-R	EA	11
PORT CONC TRF BAR (FURN & INSTL)	M	
PORT CONC TRF BAR (MOVE & RESET)	M	
PORT CONC TRF BAR (REMOVE)	M	
CONSTRUCT DETOURS (CL 3)	M2	

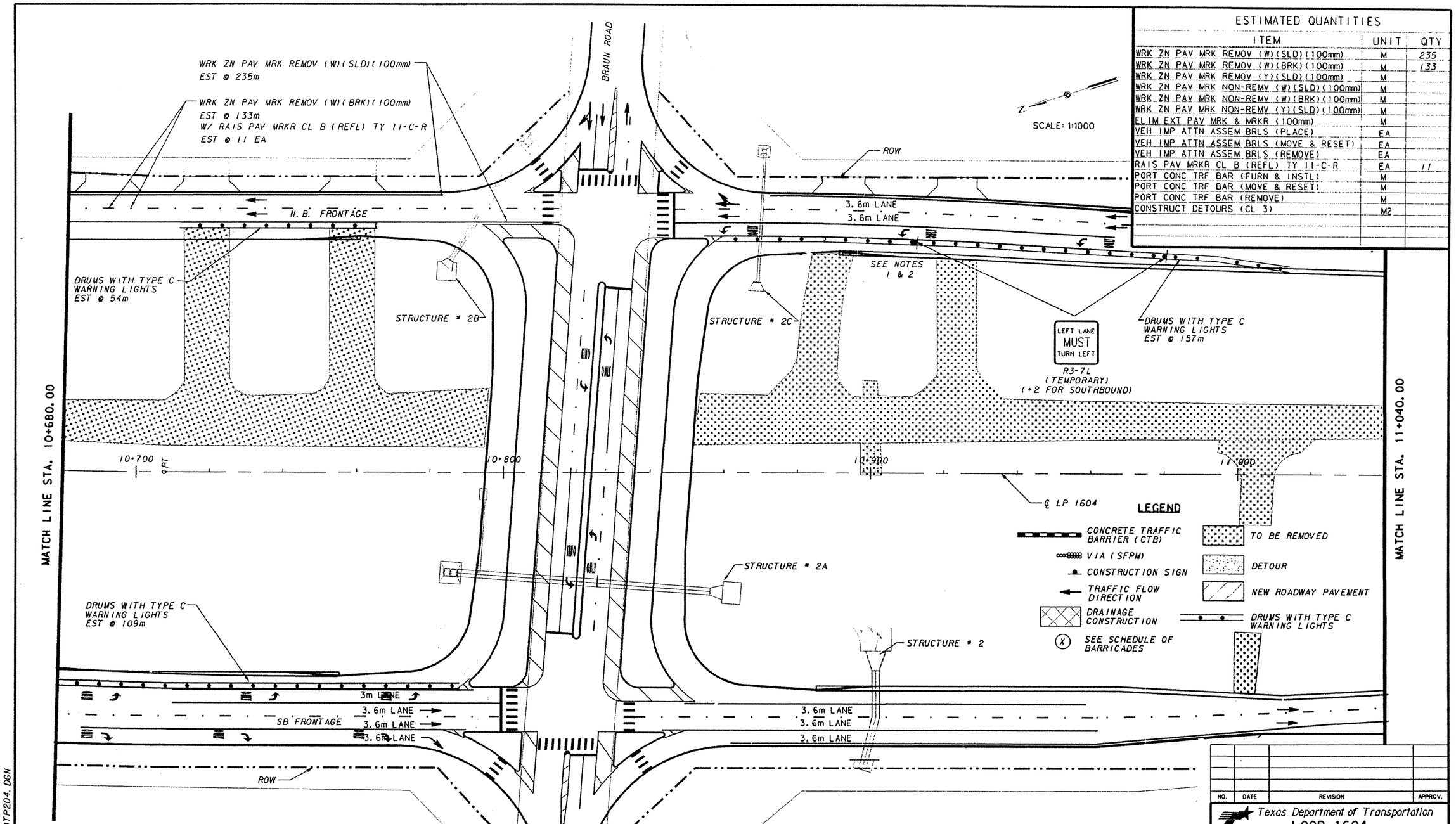

NOTES:

1. THE CONTRACTOR SHALL USE TEMPORARY LANE CLOSURE DETAIL TCP(2-1) FOR REMOVAL/CONSTRUCTION.
2. THE CONTRACTOR SHALL UTILIZE EXISTING PAVEMENT MARKINGS UNLESS OTHERWISE NOTED.
3. CONTRACTOR SHALL UTILIZE FLAGGER CONTROL AND APPROPIATE ADVANCE SIGNING WHEN TIEING INTO EXISTING PAVEMENT WITH TEMPORARY PAVEMENT.
4. ALL DRUMS, BARRICADES, WARNING LIGHTS, AND CONSTRUCTION SIGNING ARE TO BE PROVIDED BY THE CONTRACTOR AND ARE SUBSIDIARY TO ITEM 502.
5. SEE SHEET 102 FOR BRAUN ROAD TRAFFIC CONTROL.
6. PERMANENT PAVEMENT MARKINGS WILL BE INSTALLED IN ACCORDANCE WITH THE PAVEMENT MARKINGS & DELINEATION LAYOUT FOR SOUTH BOUND FRONTAGE ROAD, NORTH BOUND FRONTAGE (STA. 10+820 TO STA 11+040).

NO.	DATE	REVISION	APPROV.

Texas Department of Transportation
LOOP 1604

SEQUENCE OF WORK
PHASE 2
STA. 10+680 TO 11+040

SHEET 4 OF 15

Kimley-Horn and Associates, Inc.

STATE OF TEXAS
BRENT L. CHRISTIAN
73921
REGISTERED PROFESSIONAL ENGINEER

Brent L. Christian
5/5/97

Designed	REK	DIST	FED REG	FEDERAL AID PROJECT #			HIGHWAY
Checked	BLC	15	6				LP1604
Drawn	REK	COUNTY		CONTROL	SECT	JOB	SHEET
Checked	BLC	BEXAR		2452	01	035	86

LEVELS DISPLAYED
1 2 3 4 5 6 7 8 9 10 11 12 13 14 15 16
17 18 19 20 21 22 23 24 25 26 27 28 29 30 31 32
33 34 35 36 37 38 39 40 41 42 43 44 45 46 47 48
49 50 51 52 53 54 55 56 57 58 59 60 61 62 63

H:\DRAWINGS\67316031\TCP\604TP204.DGN

LEGEND

- CONCRETE TRAFFIC BARRIER (CTB)
- VIA (SFPM)
- CONSTRUCTION SIGN
- TRAFFIC FLOW DIRECTION
- DRAINAGE CONSTRUCTION
- TO BE REMOVED
- DETOUR
- NEW ROADWAY PAVEMENT
- DRUMS WITH TYPE C WARNING LIGHTS
- (X) SEE SCHEDULE OF BARRICADES

SCALE: 1:1000

ESTIMATED QUANTITIES

ITEM	UNIT	QTY
WRK ZN PAV MRK REMOV (W)(SLD)(100mm)	M	
WRK ZN PAV MRK REMOV (W)(BRK)(100mm)	M	
WRK ZN PAV MRK REMOV (Y)(SLD)(100mm)	M	
WRK ZN PAV MRK NON-REMV (W)(SLD)(100mm)	M	
WRK ZN PAV MRK NON-REMV (W)(BRK)(100mm)	M	
WRK ZN PAV MRK NON-REMV (Y)(SLD)(100mm)	M	
ELIM EXT PAV MRK & MRKR (100mm)	M	
VEH IMP ATTN ASSEM BRLS (PLACE)	EA	
VEH IMP ATTN ASSEM BRLS (MOVE & RESET)	EA	
VEH IMP ATTN ASSEM BRLS (REMOVE)	EA	
RAIS PAV MRKR CL B (REFL) TY II-C-R	EA	
PORT CONC TRF BAR (FURN & INSTL)	M	
PORT CONC TRF BAR (MOVE & RESET)	M	81.9
PORT CONC TRF BAR (REMOVE)	M	81.9
CONSTRUCT DETOURS (CL 3)	M2	

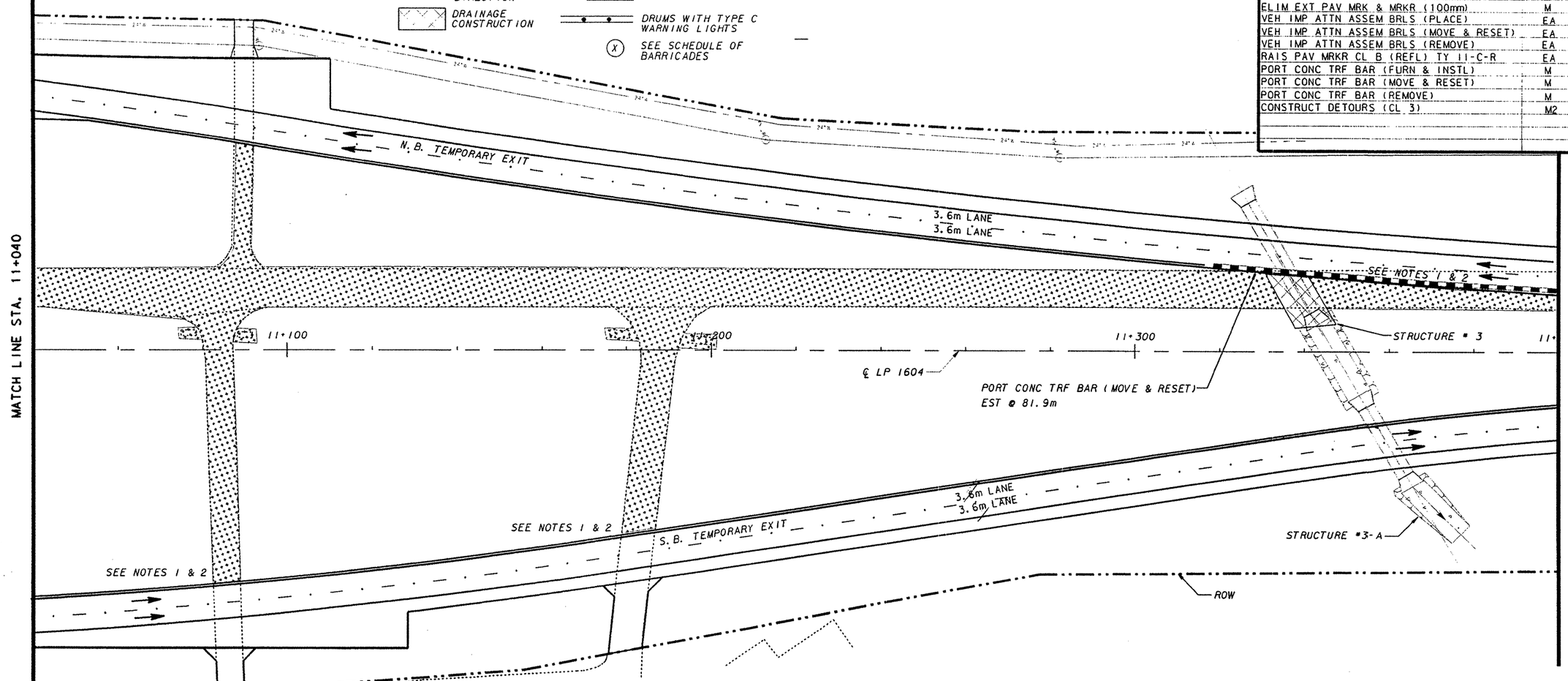

NOTES:

1. THE CONTRACTOR SHALL USE TEMPORARY LANE CLOSURE DETAIL TCP(2-1) FOR REMOVAL/CONSTRUCTION.
2. THE CONTRACTOR SHALL UTILIZE EXISTING PAVEMENT MARKINGS UNLESS OTHERWISE NOTED.
3. CONTRACTOR SHALL UTILIZE FLAGGER CONTROL AND APPROPRIATE ADVANCE SIGNING WHEN TIEING INTO EXISTING PAVEMENT WITH TEMPORARY PAVEMENT.
4. ALL DRUMS, BARRICADES, WARNING LIGHTS, AND CONSTRUCTION SIGNING ARE TO BE PROVIDED BY THE CONTRACTOR AND ARE SUBSIDIARY TO ITEM 502.
5. THE CONTRACTOR SHALL USE BLACK BASE ON ALL DETOURS AND AT BRAUN ROAD, NEW GUILBEAU, BOWENS CROSSING, AND SHAENFIELD INTERSECTIONS. SEE INTERSECTION LAYOUTS FOR LIMITS OF BLACK BASE. ASPHALT SHALL BE PLACED BETWEEN BLACK BASE AND TOP OF EXISTING PAVEMENT AT 3:1 SLOPE. ASPHALT SLOPE SHALL BE USED BETWEEN PLACEMENT OF EACH LIFT OF BLACK BASE IF BOTH LIFTS CANNOT BE COMPLETED IN ONE (1) DAY. SLOPE SHALL BE REMOVED PRIOR TO PLACEMENT OF SECOND LIFT.
6. PERMANENT PAVEMENT MARKINGS WILL BE INSTALLED IN ACCORDANCE WITH THE PAVEMENT MARKINGS & DELINEATION LAYOUT FOR N.B. TEMPORARY AND S.B. TEMPORARY EXITS FROM STA. 11+040 TO STA. 11+400.

STATE OF TEXAS
BRENT L. CHRISTIAN
73921
REGISTERED PROFESSIONAL ENGINEER

Brent L. Christian
5/5/97

NO.	DATE	REVISION	APPROV.

Texas Department of Transportation
LOOP 1604

SEQUENCE OF WORK
PHASE 2
STA. 11+040 TO STA. 11+400

SHEET 5 OF 15

Kimley-Horn and Associates, Inc.

Designed	REK	DIST	FED REG	FEDERAL AID PROJECT #				HIGHWAY	
Checked	BLC	15	6					LP1604	
Drawn	REK	COUNTY		CONTROL	SECT	JOB	SHEET		
Checked	BLC	BEXAR		2452	01	035	87		

H:\DRAWINGS\673160 3\TCP\604TP205.DGN

LEVELS DISPLAYED

LEGEND

- CONCRETE TRAFFIC BARRIER (CTB)
- VIA (SFPM)
- CONSTRUCTION SIGN
- TRAFFIC FLOW DIRECTION
- DRAINAGE CONSTRUCTION
- TO BE REMOVED
- DETOUR
- NEW ROADWAY PAVEMENT
- DRUMS WITH TYPE C WARNING LIGHTS
- (X) SEE SCHEDULE OF BARRICADES

SCALE: 1:1000

ESTIMATED QUANTITIES		
ITEM	UNIT	QTY
WRK ZN PAV MRK REMOV (W)(SLD)(100mm)	M	
WRK ZN PAV MRK REMOV (W)(BRK)(100mm)	M	
WRK ZN PAV MRK REMOV (Y)(SLD)(100mm)	M	
WRK ZN PAV MRK NON-REMV (W)(SLD)(100mm)	M	726
WRK ZN PAV MRK NON-REMV (W)(BRK)(100mm)	M	127
WRK ZN PAV MRK NON-REMV (Y)(SLD)(100mm)	M	726
ELIM EXT PAV MRK & MRKR (100mm)	M	
VEH IMP ATTN ASSEM BRLS (PLACE)	EA	
VEH IMP ATTN ASSEM BRLS (MOVE & RESET)	EA	
VEH IMP ATTN ASSEM BRLS (REMOVE)	EA	
RAIS PAV MRKR CL B (REFL) TY 11-C-R	EA	4
PORT CONC TRF BAR (FURN & INSTL)	M	
PORT CONC TRF BAR (MOVE & RESET)	M	
PORT CONC TRF BAR (REMOVE)	M	
CONSTRUCT DETOURS (CL 3)	M2	

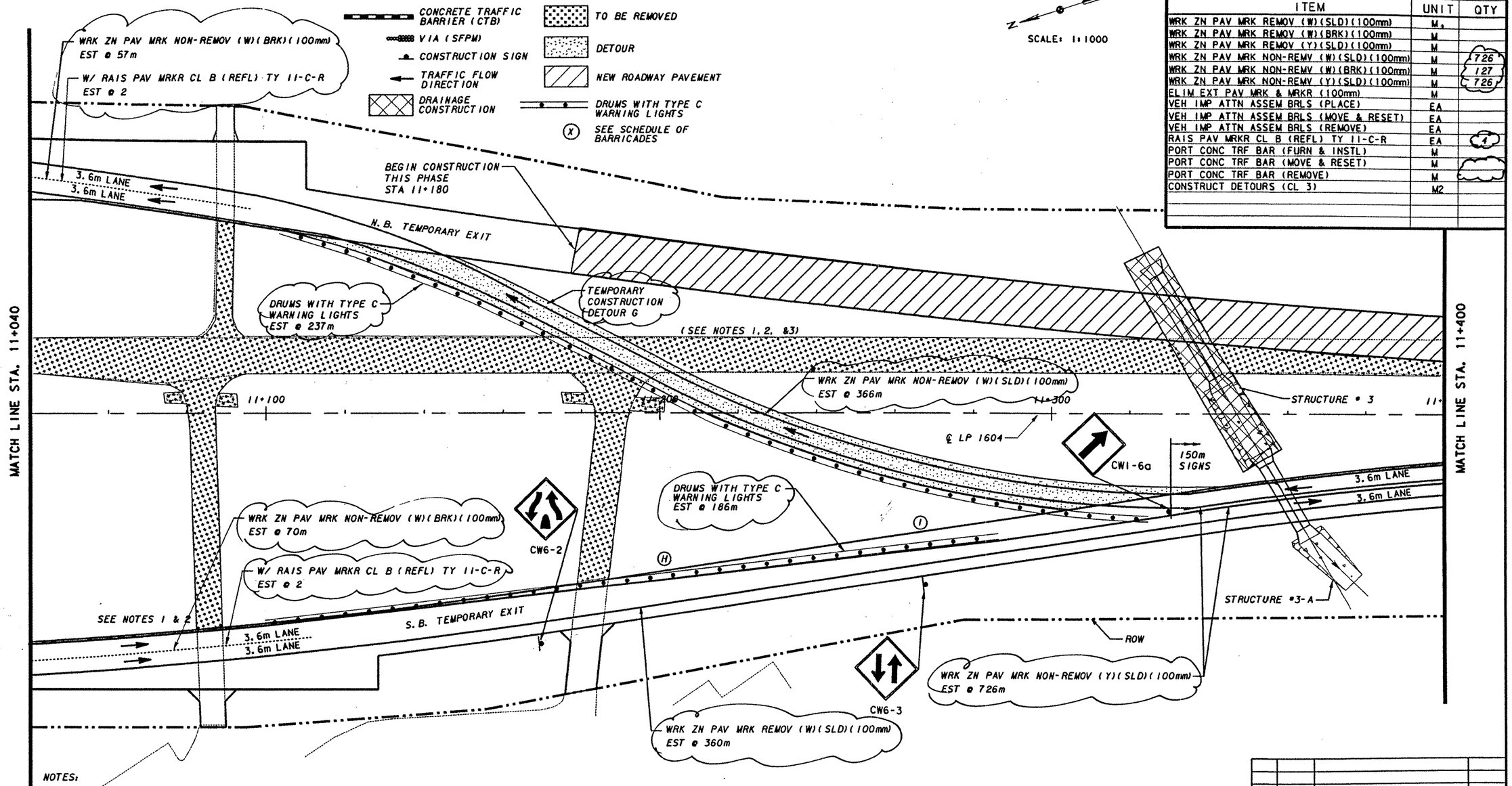

NOTES:

1. THE CONTRACTOR SHALL USE TEMPORARY LANE CLOSURE DETAIL TCP(2-1) FOR REMOVAL/CONSTRUCTION.
2. THE CONTRACTOR SHALL UTILIZE EXISTING PAVEMENT MARKINGS UNLESS OTHERWISE NOTED.
3. CONTRACTOR SHALL UTILIZE FLAGGER CONTROL AND APPROPRIATE ADVANCE SIGNING WHEN TIEING INTO EXISTING PAVEMENT WITH TEMPORARY PAVEMENT.
4. ALL DRUMS, BARRICADES, WARNING LIGHTS, AND CONSTRUCTION SIGNING ARE TO BE PROVIDED BY THE CONTRACTOR AND ARE SUBSIDIARY TO ITEM 502.
5. THE CONTRACTOR SHALL USE BLACK BASE ON ALL DETOURS AND AT BRAUN ROAD, NEW GUILBEAU, BOWENS CROSSING, AND SHAENFIELD INTERSECTIONS. SEE INTERSECTION LAYOUTS FOR LIMITS OF BLACK BASE. ASPHALT SHALL BE PLACED BETWEEN BLACK BASE AND TOP OF EXISTING PAVEMENT AT 3:1 SLOPE. ASPHALT SLOPE SHALL BE USED BETWEEN PLACEMENT OF EACH LIFT OF BLACK BASE IF BOTH LIFTS CANNOT BE COMPLETED IN ONE (1) DAY. SLOPE SHALL BE REMOVED PRIOR TO PLACEMENT OF SECOND LIFT.
6. PERMANENT PAVEMENT MARKINGS WILL BE INSTALLED IN ACCORDANCE WITH THE PAVEMENT MARKINGS & DELINEATION LAYOUT FOR N.B. TEMPORARY AND S.B. TEMPORARY EXITS FROM STA. 11+040 TO STA. 11+400.

NO.	DATE	REVISION	APPROV.

Texas Department of Transportation
LOOP 1604

SEQUENCE OF WORK
PHASE 2
STA. 11+040 TO STA. 11+400

SHEET 5 OF 15

Kimley-Horn and Associates, Inc.

STATE OF TEXAS — BRENT L. CHRISTIAN 73921 — REGISTERED PROFESSIONAL ENGINEER

Brent Christian 5-14-98

CO#6

Designed	REK	DIST	FED REG	FEDERAL AID PROJECT #			HIGHWAY
Checked	BLC	15	6	CD2452-1-35			LP1604
Drawn	REK	COUNTY		CONTROL	SECT	JOB	SHEET
Checked	BLC	BEXAR		2452	01	035	87

A

LEVELS DISPLAYED
1 2 3 4 5 6 7 8 9 10 11 12 13 14 15 16
1 1 8 1 9 2 0 2 1 2 2 3 2 4 2 5 2 6 2 7 2 8 2 9 3 0 3 1 3 2
3 3 4 3 5 3 6 3 7 3 8 3 9 4 0 4 1 4 2 4 3 4 4 4 5 4 6 4 7 4 8
4 9 5 0 5 1 5 2 5 3 5 4 5 5 5 6 5 7 5 8 5 9 6 0 6 1 6 2 6 3

H:\DRAWINGS\67316031\TCP\604TP205.DGN

LEGEND

- CONCRETE TRAFFIC BARRIER (CTB)
- VIA (SFPM)
- CONSTRUCTION SIGN
- TRAFFIC FLOW DIRECTION
- DRAINAGE CONSTRUCTION
- (X) SEE SCHEDULE OF BARRICADES
- TO BE REMOVED
- DETOUR
- NEW ROADWAY PAVEMENT
- DRUMS WITH TYPE C WARNING LIGHTS

SCALE: 1:1000

ESTIMATED QUANTITIES

ITEM	UNIT	QTY
WRK ZN PAV MRK REMOV (W)(SLD)(100mm)	M	
WRK ZN PAV MRK REMOV (W)(BRK)(100mm)	M	
WRK ZN PAV MRK REMOV (Y)(SLD)(100mm)	M	
WRK ZN PAV MRK NON-REMV (W)(SLD)(100mm)	M	230
WRK ZN PAV MRK NON-REMV (W)(BRK)(100mm)	M	190
WRK ZN PAV MRK NON-REMV (Y)(SLD)(100mm)	M	195
ELIM EXT PAV MRK & MRKR (100mm)	M	185
VEH IMP ATTN ASSEM BRLS (PLACE)	EA	
VEH IMP ATTN ASSEM BRLS (MOVE & RESET)	EA	14
VEH IMP ATTN ASSEM BRLS (REMOVE)	EA	14
RAIS PAV MRKR CL B (REFL) TY II-C-R	EA	17
PORT CONC TRF BAR (FURN & INSTL)	M	
PORT CONC TRF BAR (MOVE & RESET)	M	236.6
PORT CONC TRF BAR (REMOVE)	M	236.6
CONSTRUCT DETOURS (CL 3)	M2	

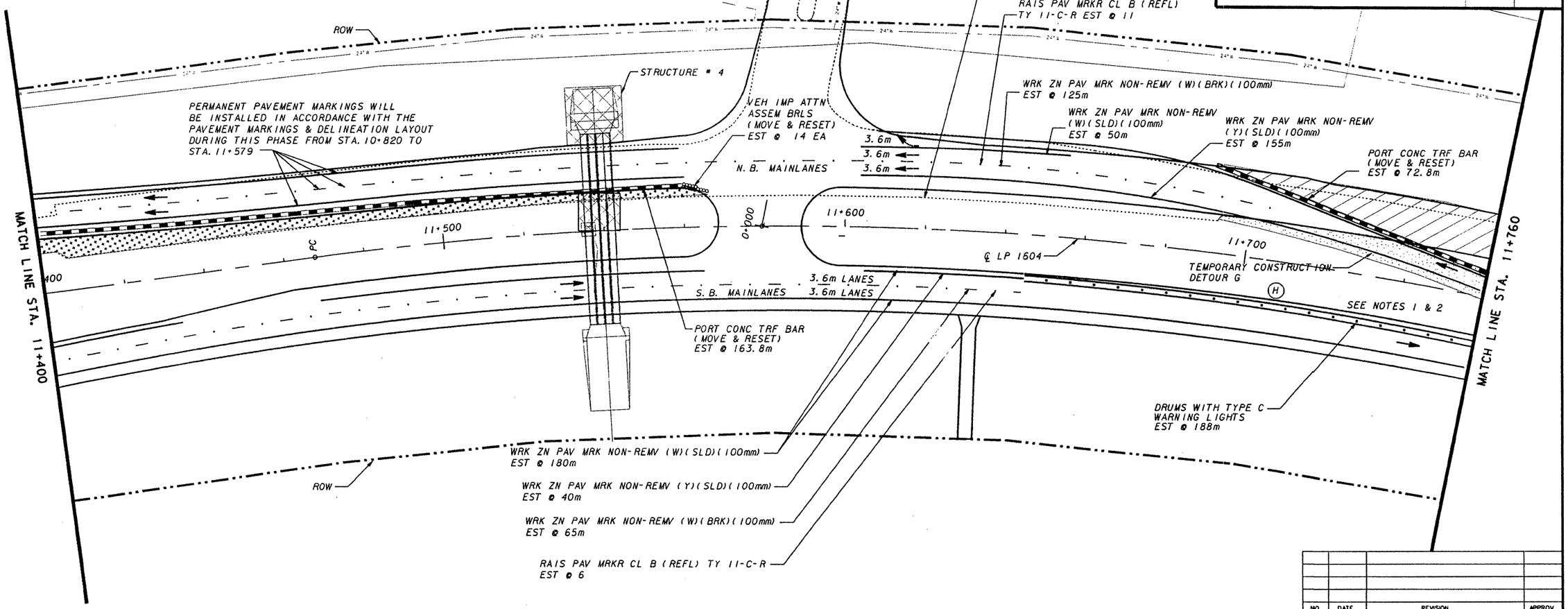

NOTES:

1. THE CONTRACTOR SHALL USE TEMPORARY LANE CLOSURE DETAIL TCP(2-1) FOR REMOVAL/CONSTRUCTION.
2. THE CONTRACTOR SHALL UTILIZE EXISTING PAVEMENT MARKINGS UNLESS OTHERWISE NOTED.
3. CONTRACTOR SHALL UTILIZE FLAGGER CONTROL AND APPROPRIATE ADVANCE SIGNING WHEN TIEING INTO EXISTING PAVEMENT WITH TEMPORARY PAVEMENT.
4. ALL DRUMS, BARRICADES, WARNING LIGHTS, AND CONSTRUCTION SIGNING ARE TO BE PROVIDED BY THE CONTRACTOR AND ARE SUBSIDIARY TO ITEM 502.
5. SEE SHEET 65 FOR DETOUR G PLAN & PEOFILE.
6. THE CONTRACTOR SHALL USE BLACK BASE ON ALL DETOURS AND AT BRAUN ROAD, NEW GUILBEAU, BOWENS CROSSING, AND SHAENFIELD INTERSECTIONS. SEE INTERSECTION LAYOUTS FOR LIMITS OF BLACK BASE. ASPHALT SHALL BE PLACED BETWEEN BLACK BASE AND TOP OF EXISTING PAVEMENT AT 3:1 SLOPE. ASPHALT SLOPE SHALL BE USED BETWEEN PLACEMENT OF EACH LIFT OF BLACK BASE IF BOTH LIFTS CANNOT BE COMPLETED IN ONE (1) DAY. SLOPE SHALL BE REMOVED PRIOR TO PLACEMENT OF SECOND LIFT.
7. PERMANENT PAVEMENT MARKINGS WILL BE INSTALLED IN ACCORDANCE WITH THE PAVEMENT MARKINGS & DELINEATION LAYOUT FOR MAINLANES FROM STA. 11+400 TO STA. 11+579.

STATE OF TEXAS
BRENT L. CHRISTIAN
73921
REGISTERED PROFESSIONAL ENGINEER

Brent L. Christian
5/5/97

NO.	DATE	REVISION	APPROV.

Texas Department of Transportation
LOOP 1604

SEQUENCE OF WORK
PHASE 2
STA. 11+400 TO 11+760

SHEET 6 OF 15

Kimley-Horn and Associates, Inc.

Designed	REK	DIST	FED REG	FEDERAL AID PROJECT				HIGHWAY
Checked	BLC	15	6					LP1604
Drawn	REK	COUNTY			CONTROL	SECT	JOB	SHEET
Checked	BLC	BEXAR			2452	01	035	88

LEVELS DISPLAYED
1 2 3 4 5 6 7 8 9 10 11 12 13 14 15 16
17 18 19 20 21 22 23 24 25 26 27 28 29 30 31 32
33 34 35 36 37 38 39 40 41 42 43 44 45 46 47 48
49 50 51 52 53 54 55 56 57 58 59 60 61 62 63

H:\DRAWINGS\67316031\TCP\604TP206.DGN

LEGEND

- CONCRETE TRAFFIC BARRIER (CTB)
- VIA (SFPM)
- CONSTRUCTION SIGN
- TRAFFIC FLOW DIRECTION
- DRAINAGE CONSTRUCTION
- (X) SEE SCHEDULE OF BARRICADES
- TO BE REMOVED
- DETOUR
- NEW ROADWAY PAVEMENT
- DRUMS WITH TYPE C WARNING LIGHTS

SCALE: 1:1000

ESTIMATED QUANTITIES		
ITEM	UNIT	QTY
WRK ZN PAV MRK REMOV (W)(SLD)(100mm)	M	145
WRK ZN PAV MRK REMOV (W)(BRK)(100mm)	M	
WRK ZN PAV MRK REMOV (Y)(SLD)(100mm)	M	143
WRK ZN PAV MRK NON-REMV (W)(SLD)(100mm)	M	670
WRK ZN PAV MRK NON-REMV (W)(BRK)(100mm)	M	
WRK ZN PAV MRK NON-REMV (Y)(SLD)(100mm)	M	670
ELIM EXT PAV MRK & MRKR (100mm)	M	185
VEH IMP ATTN ASSEM BRLS (PLACE)	EA	
VEH IMP ATTN ASSEM BRLS (MOVE & RESET)	EA	
VEH IMP ATTN ASSEM BRLS (REMOVE)	EA	
RAIS PAV MRKR CL B (REFL) TY II-C-R	EA	
PORT CONC TRF BAR (FURN & INSTL)	M	
PORT CONC TRF BAR (MOVE & RESET)	M	
PORT CONC TRF BAR (REMOVE)	M	
CONSTRUCT DETOURS (CL 3)	M2	

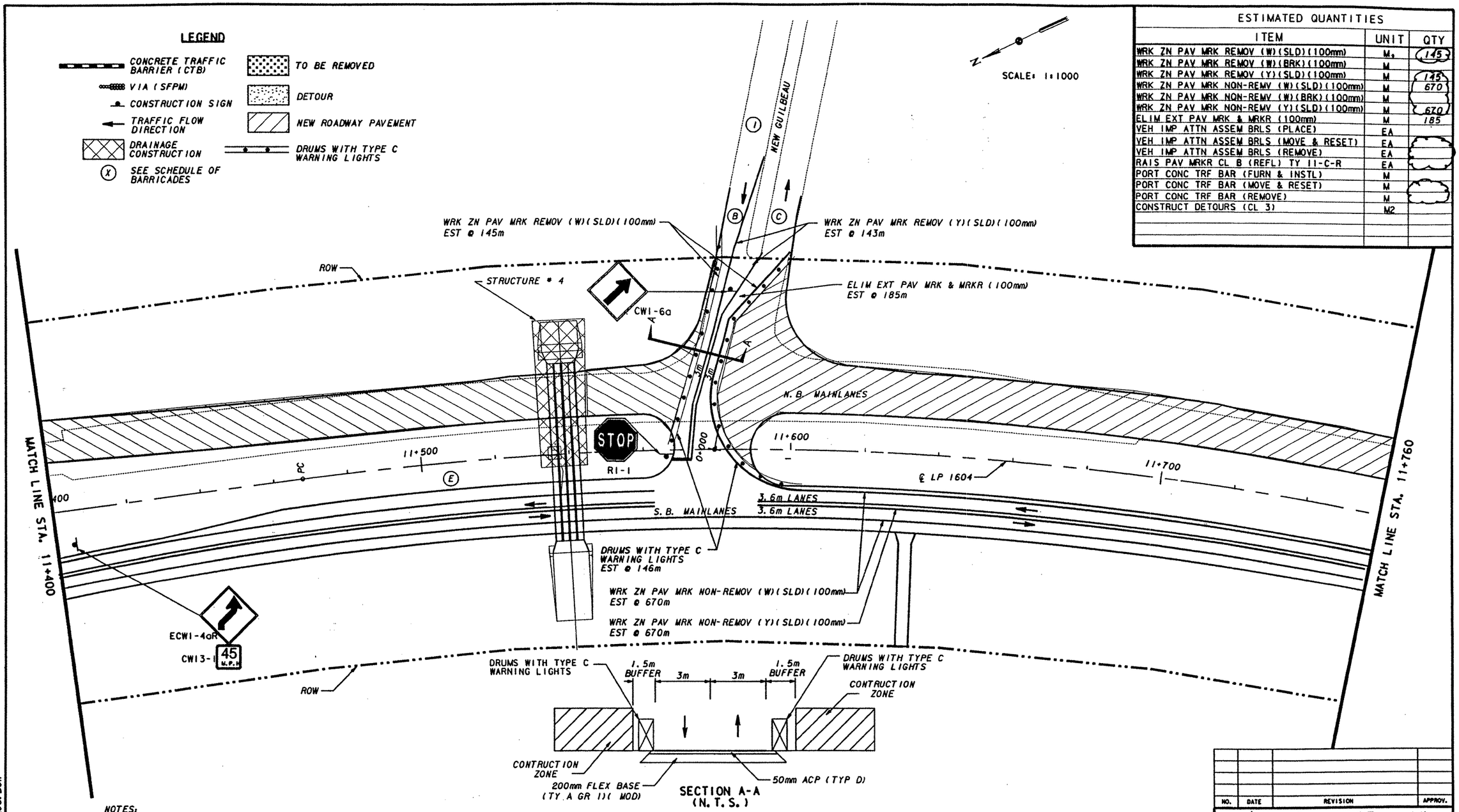

NOTES:

1. THE CONTRACTOR SHALL USE TEMPORARY LANE CLOSURE DETAIL TCP(2-1) FOR REMOVAL/CONSTRUCTION.
2. THE CONTRACTOR SHALL UTILIZE EXISTING PAVEMENT MARKINGS UNLESS OTHERWISE NOTED.
3. CONTRACTOR SHALL UTILIZE FLAGGER CONTROL AND APPROPRIATE ADVANCE SIGNING WHEN TIEING INTO EXISTING PAVEMENT WITH TEMPORARY PAVEMENT.
4. ALL DRUMS, BARRICADES, WARNING LIGHTS, AND CONSTRUCTION SIGNING ARE TO BE PROVIDED BY THE CONTRACTOR AND ARE SUBSIDIARY TO ITEM 502.
5. SEE SHEET 65 FOR DETOUR G PLAN & PEOFILE.
6. THE CONTRACTOR SHALL USE BLACK BASE ON ALL DETOURS AND AT BRAUN ROAD, NEW GUILBEAU, BOWENS CROSSING, AND SHAENFIELD INTERSECTIONS. SEE INTERSECTION LAYOUTS FOR LIMITS OF BLACK BASE. ASPHALT SHALL BE PLACED BETWEEN BLACK BASE AND TOP OF EXISTING PAVEMENT AT 3:1 SLOPE. ASPHALT SLOPE SHALL BE USED BETWEEN PLACEMENT OF EACH LIFT OF BLACK BASE IF BOTH LIFTS CANNOT BE COMPLETED IN ONE (1) DAY. SLOPE SHALL BE REMOVED PRIOR TO PLACEMENT OF SECOND LIFT.
7. PERMANENT PAVEMENT MARKINGS WILL BE INSTALLED IN ACCORDANCE WITH THE PAVEMENT MARKINGS & DELINEATION LAYOUT FOR MAINLANES FROM STA. 11+400 TO STA. 11+579.

CO#6

STATE OF TEXAS
BRENT L. CHRISTIAN
73921
REGISTERED PROFESSIONAL ENGINEER

Brent L. Christian
5-14-98

NO.	DATE	REVISION	APPROV.

Texas Department of Transportation
LOOP 1604

SEQUENCE OF WORK
PHASE 2
STA. 11+400 TO 11+760

SHEET 6 OF 15

Kimley-Horn and Associates, Inc.

Designed	REK	DIST	FED REG	FEDERAL AID PROJECT #				HIGHWAY
Checked	BLC	15	6	CD2452-1-35				LP1604
Drawn	REK	COUNTY			CONTROL	SECT	JOB	SHEET
Checked	BLC	BEXAR			2452	01	035	88

A

LEVELS DISPLAYED
1 2 3 4 5 6 7 8 9 10 11 12 13 14 15 16
17 18 19 20 21 22 23 24 25 26 27 28 29 30 31 32
33 34 35 36 37 38 39 40 41 42 43 44 45 46 47 48
49 50 51 52 53 54 55 56 57 58 59 60 61 62 63

H:\DRAWINGS\67316035\TCP\604TP206.DGN

LEGEND

- CONCRETE TRAFFIC BARRIER (CTB)
- VIA (SFPM)
- CONSTRUCTION SIGN
- TRAFFIC FLOW DIRECTION
- DRAINAGE CONSTRUCTION
- (X) SEE SCHEDULE OF BARRICADES
- TO BE REMOVED
- DETOUR
- NEW ROADWAY PAVEMENT
- DRUMS WITH TYPE C WARNING LIGHTS

SCALE: 1:1000

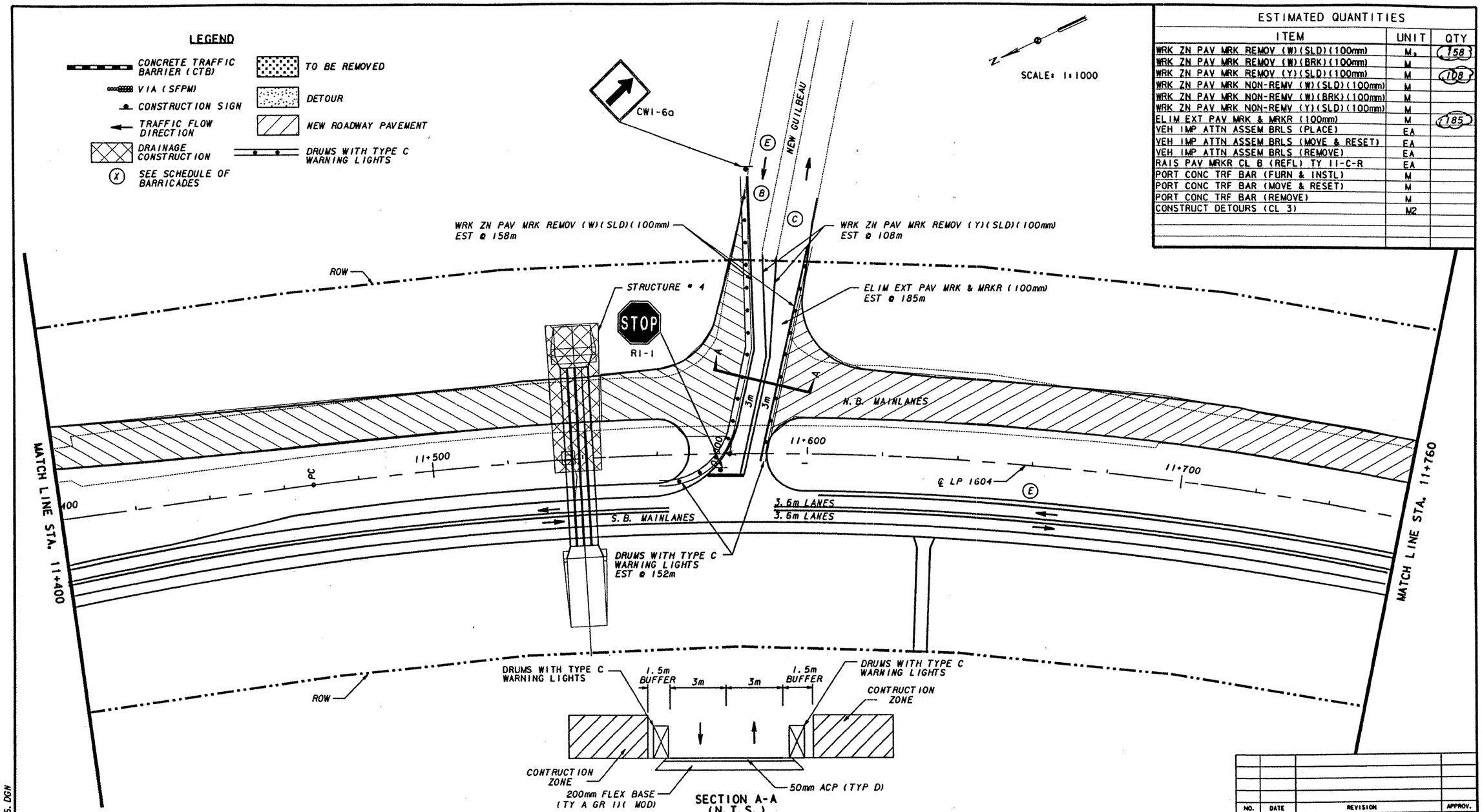

ESTIMATED QUANTITIES

ITEM	UNIT	QTY
WRK ZN PAV MRK REMOV (W)(SLD)(100mm)	M	158
WRK ZN PAV MRK REMOV (W)(BRK)(100mm)	M	
WRK ZN PAV MRK REMOV (Y)(SLD)(100mm)	M	108
WRK ZN PAV MRK NON-REMV (W)(SLD)(100mm)	M	
WRK ZN PAV MRK NON-REMV (W)(BRK)(100mm)	M	
WRK ZN PAV MRK NON-REMV (Y)(SLD)(100mm)	M	
ELIM EXT PAV MRK & MRKR (100mm)	M	185
VEH IMP ATTN ASSEM BRLS (PLACE)	EA	
VEH IMP ATTN ASSEM BRLS (MOVE & RESET)	EA	
VEH IMP ATTN ASSEM BRLS (REMOVE)	EA	
RAIS PAV MRKR CL B (REFL) TY II-C-R	EA	
PORT CONC TRF BAR (FURN & INSTL)	M	
PORT CONC TRF BAR (MOVE & RESET)	M	
PORT CONC TRF BAR (REMOVE)	M	
CONSTRUCT DETOURS (CL 3)	M2	

NOTES:

1. THE CONTRACTOR SHALL USE TEMPORARY LANE CLOSURE DETAIL TCP(2-1) FOR REMOVAL/CONSTRUCTION.
2. THE CONTRACTOR SHALL UTILIZE EXISTING PAVEMENT MARKINGS UNLESS OTHERWISE NOTED.
3. CONTRACTOR SHALL UTILIZE FLAGGER CONTROL AND APPROPRIATE ADVANCE SIGNING WHEN TIEING INTO EXISTING PAVEMENT WITH TEMPORARY PAVEMENT.
4. ALL DRUMS, BARRICADES, WARNING LIGHTS, AND CONSTRUCTION SIGNING ARE TO BE PROVIDED BY THE CONTRACTOR AND ARE SUBSIDIARY TO ITEM 502.
5. SEE SHEET 65 FOR DETOUR G PLAN & PEOFILE.
6. THE CONTRACTOR SHALL USE BLACK BASE ON ALL DETOURS AND AT BRAUN ROAD, NEW GUILBEAU, BOWENS CROSSING, AND SHAENFIELD INTERSECTIONS. SEE INTERSECTION LAYOUTS FOR LIMITS OF BLACK BASE. ASPHALT SHALL BE PLACED BETWEEN BLACK BASE AND TOP OF EXISTING PAVEMENT AT 3:1 SLOPE. ASPHALT SLOPE SHALL BE USED BETWEEN PLACEMENT OF EACH LIFT OF BLACK BASE IF BOTH LIFTS CANNOT BE COMPLETED IN ONE (1) DAY. SLOPE SHALL BE REMOVED PRIOR TO PLACEMENT OF SECOND LIFT.
7. PERMANENT PAVEMENT MARKINGS WILL BE INSTALLED IN ACCORDANCE WITH THE PAVEMENT MARKINGS & DELINEATION LAYOUT FOR MAINLANES FROM STA. 11+400 TO STA. 11+579.

STATE OF TEXAS — BRENT L. CHRISTIAN — 73921 — REGISTERED PROFESSIONAL ENGINEER

NEW SHEET CO#6 — Brent L. Christian 5-14-98

NO.	DATE	REVISION	APPROV.

Texas Department of Transportation
LOOP 1604

SEQUENCE OF WORK
PHASE 2
STA. 11+400 TO 11+760
ADDITIONAL SHEET

Kimley-Horn and Associates, Inc.

Designed	REX	DIST	FED REG	FEDERAL AID PROJECT #				HIGHWAY
Checked	BLC	15	6	CD2452-1-35				LP1604
Drawn	REX	COUNTY			CONTROL	SECT	JOB	SHEET
Checked	BLC	BEXAR			2452	01	035	88

LEVELS DISPLAYED

H:\DRAWINGS\673603\TCP\604TP206.DGN

LEGEND

- CONCRETE TRAFFIC BARRIER (CTB)
- VIA (SFPM)
- CONSTRUCTION SIGN
- TRAFFIC FLOW DIRECTION
- DRAINAGE CONSTRUCTION
- (X) SEE SCHEDULE OF BARRICADES
- TO BE REMOVED
- DETOUR
- NEW ROADWAY PAVEMENT
- DRUMS WITH TYPE C WARNING LIGHTS

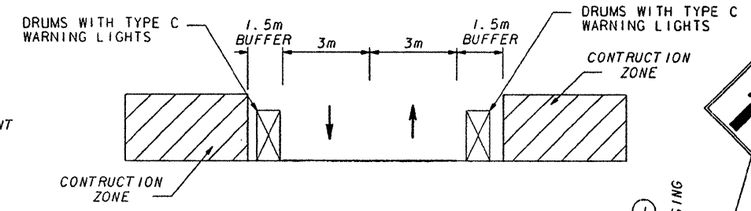

SECTION A-A
(N.T.S)

SCALE: 1:1000

ESTIMATED QUANTITIES

ITEM	UNIT	QTY
WRK ZN PAV MRK REMOV (W)(SLD)(100mm)	M	100
WRK ZN PAV MRK REMOV (W)(BRK)(100mm)	M	
WRK ZN PAV MRK REMOV (Y)(SLD)(100mm)	M	116
WRK ZN PAV MRK NON-REMV (W)(SLD)(100mm)	M	723
WRK ZN PAV MRK NON-REMV (W)(BRK)(100mm)	M	
WRK ZN PAV MRK NON-REMV (Y)(SLD)(100mm)	M	782
ELIM EXT PAV MRK & MRKR (100mm)	M	100
VEH IMP ATTN ASSEM BRLS (PLACE)	EA	
VEH IMP ATTN ASSEM BRLS (MOVE & RESET)	EA	14
VEH IMP ATTN ASSEM BRLS (REMOVE)	EA	14
RAIS PAV MRKR CL B (REFL) TY II-C-R	EA	
PORT CONC TRF BAR (FURN & INSTL)	M	
PORT CONC TRF BAR (MOVE & RESET)	M	9.1
PORT CONC TRF BAR (REMOVE)	M	9.1
CONSTRUCT DETOURS (CL 3)	M2	

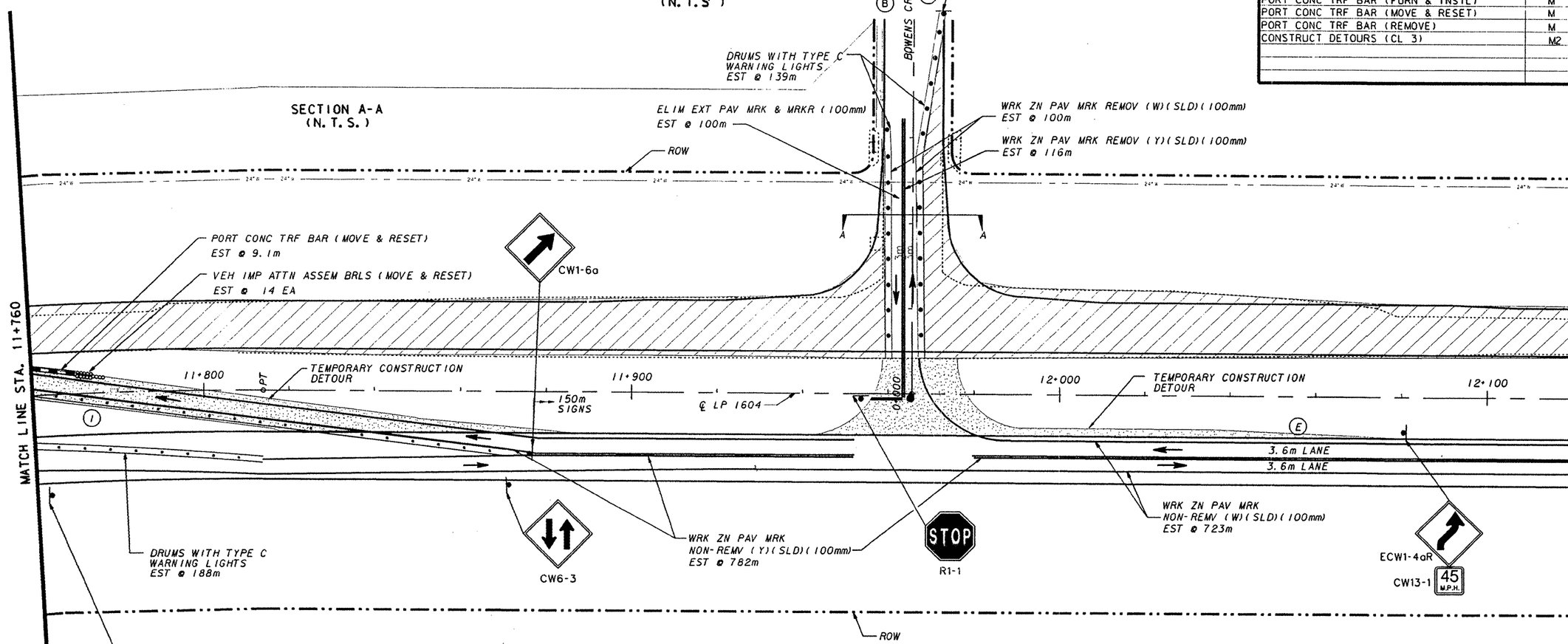

NOTES:

1. THE CONTRACTOR SHALL USE TEMPORARY LANE CLOSURE DETAIL TCP(2-1) FOR REMOVAL/CONSTRUCTION.
2. THE CONTRACTOR SHALL UTILIZE EXISTING PAVEMENT MARKINGS UNLESS OTHERWISE NOTED.
3. CONTRACTOR SHALL UTILIZE FLAGGER CONTROL AND APPROPRIATE ADVANCE SIGNING WHEN TIEING INTO EXISTING PAVEMENT WITH TEMPORARY PAVEMENT.
4. ALL DRUMS, BARRICADES, WARNING LIGHTS, AND CONSTRUCTION SIGNING ARE TO BE PROVIDED BY THE CONTRACTOR AND ARE SUBSIDIARY TO ITEM 502.
6. THE CONTRACTOR SHALL USE BLACK BASE ON ALL DETOURS AND AT BRAUN ROAD, NEW GUILBEAU, BOWENS CROSSING, AND SHAENFIELD INTERSECTIONS. SEE INTERSECTION LAYOUTS FOR LIMITS OF BLACK BASE. ASPHALT SHALL BE PLACED BETWEEN BLACK BASE AND TOP OF EXISTING PAVEMENT AT 3:1 SLOPE. ASPHALT SLOPE SHALL BE USED BETWEEN PLACEMENT OF EACH LIFT OF BLACK BASE IF BOTH LIFTS CANNOT BE COMPLETED IN ONE (1) DAY. SLOPE SHALL BE REMOVED PRIOR TO PLACEMENT OF SECOND LIFT.

Revised 7-25-97

STATE OF TEXAS
BRENT L. CHRISTIAN
73921
REGISTERED PROFESSIONAL ENGINEER
Brent L. Christian
5/5/97

NO.	DATE	REVISION	APPROV.

Texas Department of Transportation
LOOP 1604

SEQUENCE OF WORK
PHASE 2
STA. 11+760 TO 12+120

SHEET 7 OF 15

Kimley-Horn and Associates, Inc.

Designed	REK	DIST	FED REG	FEDERAL AID PROJECT				HIGHWAY
Checked	BLC	15	6					LP1604
Drawn	REK	COUNTY		CONTROL	SECT	JOB		SHEET
Checked	BLC	BEXAR		2452	01	035		89

LEVELS DISPLAYED
1 2 3 4 5 6 7 8 9 10 11 12 13 14 15 16
17 18 19 20 21 22 23 24 25 26 27 28 29 30 31 32
33 34 35 36 37 38 39 40 41 42 43 44 45 46 47 48
49 50 51 52 53 54 55 56 57 58 59 60 61 62 63

H:\DRAWINGS\67316O3\TCP\604TP207.DGN

LEGEND

- CONCRETE TRAFFIC BARRIER (CTB)
- VIA (SFPM)
- CONSTRUCTION SIGN
- TRAFFIC FLOW DIRECTION
- DRAINAGE CONSTRUCTION
- (X) SEE SCHEDULE OF BARRICADES
- TO BE REMOVED
- DETOUR
- NEW ROADWAY PAVEMENT
- DRUMS WITH TYPE C WARNING LIGHTS

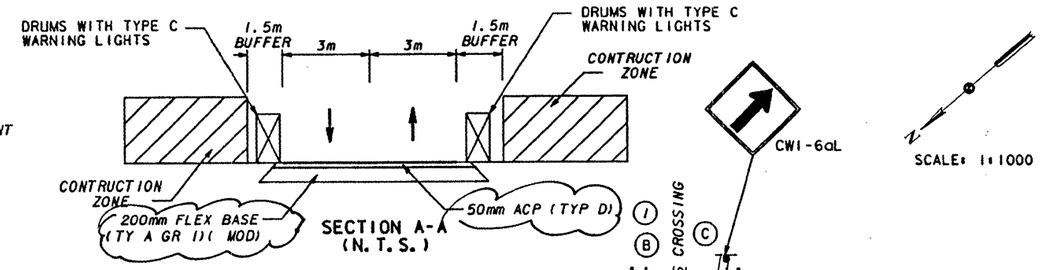

SECTION A-A (N. T. S.)

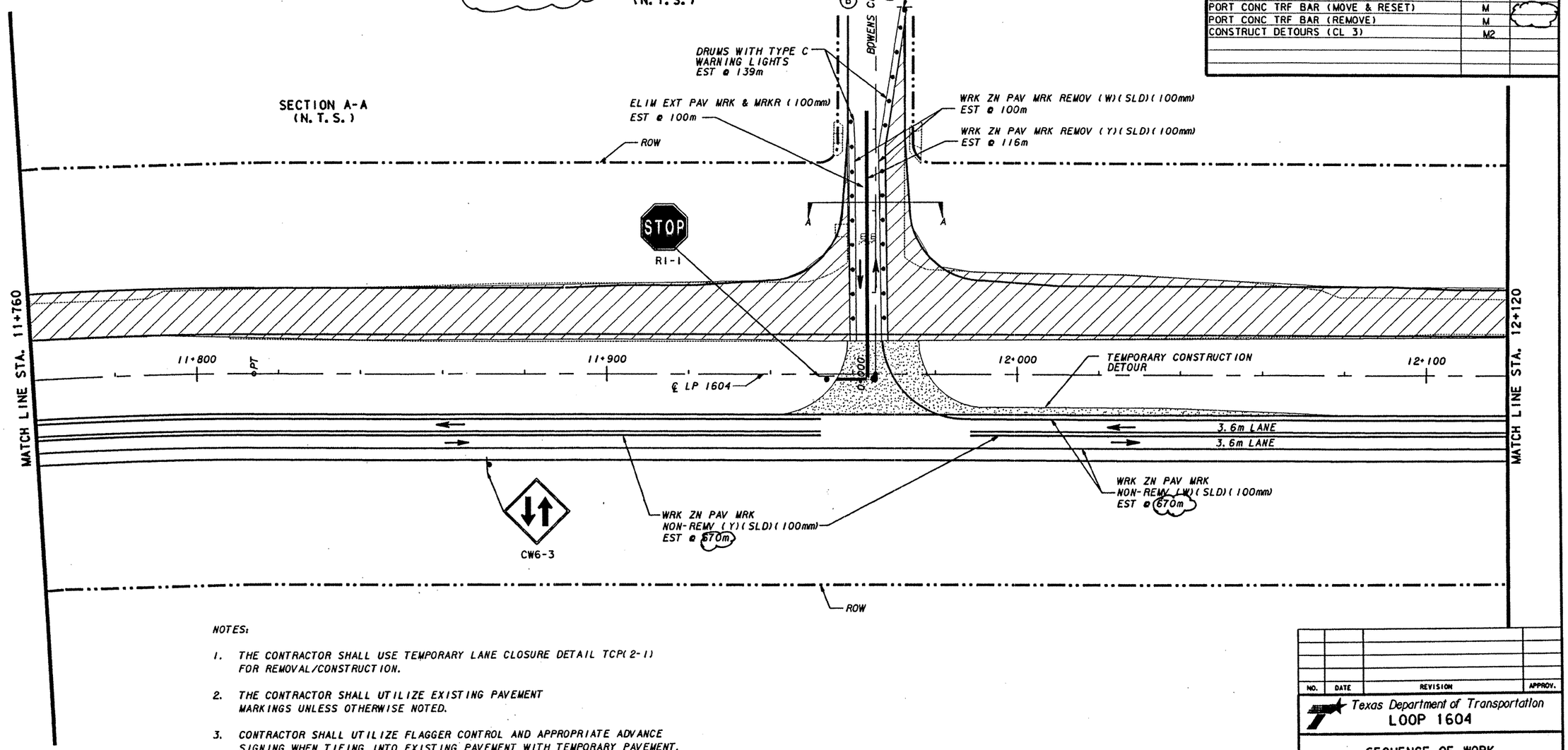

ESTIMATED QUANTITIES

ITEM	UNIT	QTY
WRK ZN PAV MRK REMOV (W)(SLD)(100mm)	M	100
WRK ZN PAV MRK REMOV (W)(BRK)(100mm)	M	
WRK ZN PAV MRK REMOV (Y)(SLD)(100mm)	M	116
WRK ZN PAV MRK NON-REMV (W)(SLD)(100mm)	M	670
WRK ZN PAV MRK NON-REMV (W)(BRK)(100mm)	M	
WRK ZN PAV MRK NON-REMV (Y)(SLD)(100mm)	M	670
ELIM EXT PAV MRK & MRKR (100mm)	M	100
VEH IMP ATTN ASSEM BRLS (PLACE)	EA	
VEH IMP ATTN ASSEM BRLS (MOVE & RESET)	EA	
VEH IMP ATTN ASSEM BRLS (REMOVE)	EA	
RAIS PAV MRKR CL B (REFL) TY II-C-R	EA	
PORT CONC TRF BAR (FURN & INSTL)	M	
PORT CONC TRF BAR (MOVE & RESET)	M	
PORT CONC TRF BAR (REMOVE)	M	
CONSTRUCT DETOURS (CL 3)	M2	

NOTES:

1. THE CONTRACTOR SHALL USE TEMPORARY LANE CLOSURE DETAIL TCP(2-1) FOR REMOVAL/CONSTRUCTION.
2. THE CONTRACTOR SHALL UTILIZE EXISTING PAVEMENT MARKINGS UNLESS OTHERWISE NOTED.
3. CONTRACTOR SHALL UTILIZE FLAGGER CONTROL AND APPROPRIATE ADVANCE SIGNING WHEN TIEING INTO EXISTING PAVEMENT WITH TEMPORARY PAVEMENT.
4. ALL DRUMS, BARRICADES, WARNING LIGHTS, AND CONSTRUCTION SIGNING ARE TO BE PROVIDED BY THE CONTRACTOR AND ARE SUBSIDIARY TO ITEM 502.
6. THE CONTRACTOR SHALL USE BLACK BASE ON ALL DETOURS AND AT BRAUN ROAD, NEW GUILBEAU, BOWENS CROSSING, AND SHAENFIELD INTERSECTIONS. SEE INTERSECTION LAYOUTS FOR LIMITS OF BLACK BASE. ASPHALT SHALL BE PLACED BETWEEN BLACK BASE AND TOP OF EXISTING PAVEMENT AT 3:1 SLOPE. ASPHALT SLOPE SHALL BE USED BETWEEN PLACEMENT OF EACH LIFT OF BLACK BASE IF BOTH LIFTS CANNOT BE COMPLETED IN ONE (1) DAY. SLOPE SHALL BE REMOVED PRIOR TO PLACEMENT OF SECOND LIFT.

NO.	DATE	REVISION	APPROV.

Texas Department of Transportation
LOOP 1604

SEQUENCE OF WORK
PHASE 2
STA. 11+760 TO 12+120

SHEET 7 OF 15

Kimley-Horn and Associates, Inc.

Designed	REK	DIST	FED REG	FEDERAL AID PROJECT #				HIGHWAY
Checked	BLC	15	6	CD 2452-1-35				LP1604
Drawn	REK	COUNTY			CONTROL	SECT	JOB	SHEET
Checked	BLC	BEXAR			2452	01	035	89

STATE OF TEXAS
BRENT L. CHRISTIAN
73921
REGISTERED PROFESSIONAL ENGINEER

Brent Christian
5-14-98

CO#6

LEVELS DISPLAYED
1 2 3 4 5 6 7 8 9 10 11 12 13 14 15 16
17 18 19 20 21 22 23 24 25 26 27 28 29 30 31 32
33 34 35 36 37 38 39 40 41 42 43 44 45 46 47 48
49 50 51 52 53 54 55 56 57 58 59 60 61 62 63

4:\DRAWINGS\67316031\TCP\604TP207.DGN

LEGEND

- CONCRETE TRAFFIC BARRIER (CTB)
- VIA (SFPM)
- CONSTRUCTION SIGN
- TRAFFIC FLOW DIRECTION
- DRAINAGE CONSTRUCTION
- (X) SEE SCHEDULE OF BARRICADES
- TO BE REMOVED
- DETOUR
- NEW ROADWAY PAVEMENT
- DRUMS WITH TYPE C WARNING LIGHTS

SCALE: 1:1000

ESTIMATED QUANTITIES		
ITEM	UNIT	QTY
WRK ZN PAV MRK REMOV (W)(SLD)(100mm)	M	135
WRK ZN PAV MRK REMOV (W)(BRK)(100mm)	M	
WRK ZN PAV MRK REMOV (Y)(SLD)(100mm)	M	130
WRK ZN PAV MRK NON-REMV (W)(SLD)(100mm)	M	
WRK ZN PAV MRK NON-REMV (W)(BRK)(100mm)	M	
WRK ZN PAV MRK NON-REMV (Y)(SLD)(100mm)	M	
ELIM EXT PAV MRK & MRKR (100mm)	M	
VEH IMP ATTN ASSEM BRLS (PLACE)	EA	
VEH IMP ATTN ASSEM BRLS (MOVE & RESET)	EA	
VEH IMP ATTN ASSEM BRLS (REMOVE)	EA	
RAIS PAV MRKR CL B (REFL) TY II-C-R	EA	
PORT CONC TRF BAR (FURN & INSTL)	M	
PORT CONC TRF BAR (MOVE & RESET)	M	
PORT CONC TRF BAR (REMOVE)	M	
CONSTRUCT DETOURS (CL 3)	M2	

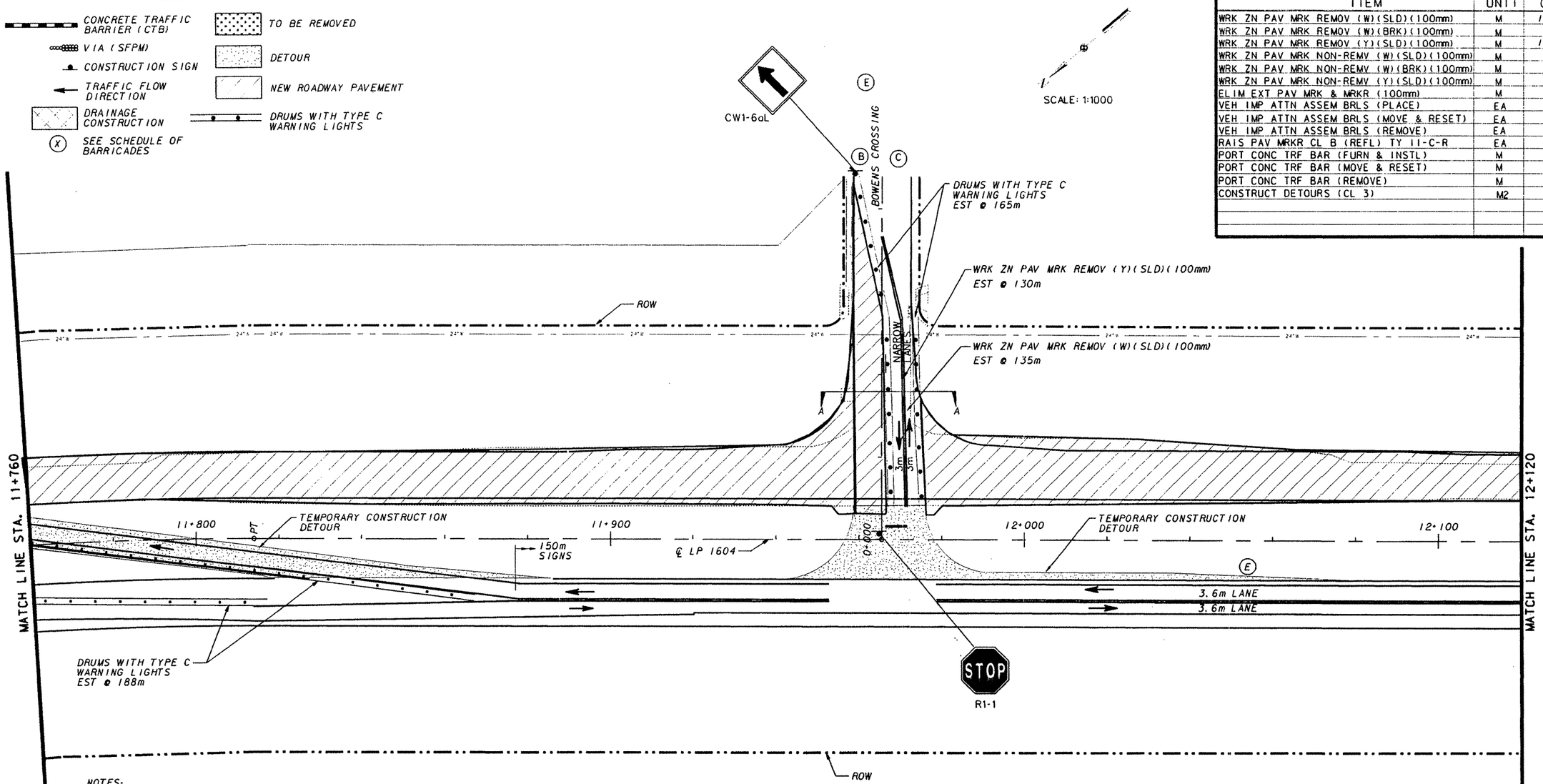

NOTES:

1. THE CONTRACTOR SHALL USE TEMPORARY LANE CLOSURE DETAIL TCP(2-1) FOR REMOVAL/CONSTRUCTION.
2. THE CONTRACTOR SHALL UTILIZE EXISTING PAVEMENT MARKINGS UNLESS OTHERWISE NOTED.
3. CONTRACTOR SHALL UTILIZE FLAGGER CONTROL AND APPROPRIATE ADVANCE SIGNING WHEN TIEING INTO EXISTING PAVEMENT WITH TEMPORARY PAVEMENT.
4. ALL DRUMS, BARRICADES, WARNING LIGHTS, AND CONSTRUCTION SIGNING ARE TO BE PROVIDED BY THE CONTRACTOR AND ARE SUBSIDIARY TO ITEM 502.
5. THE CONTRACTOR SHALL USE BLACK BASE ON ALL DETOURS AND AT BRAUN ROAD, NEW GUILBEAU, BOWENS CROSSING, AND SHAENFIELD INTERSECTIONS. SEE INTERSECTION LAYOUTS FOR LIMITS OF BLACK BASE. ASPHALT SHALL BE PLACED BETWEEN BLACK BASE AND TOP OF EXISTING PAVEMENT AT 3:1 SLOPE. ASPHALT SLOPE SHALL BE USED BETWEEN PLACEMENT OF EACH LIFT OF BLACK BASE IF BOTH LIFTS CANNOT BE COMPLETED IN ONE (1) DAY. SLOPE SHALL BE REMOVED PRIOR TO PLACEMENT OF SECOND LIFT.

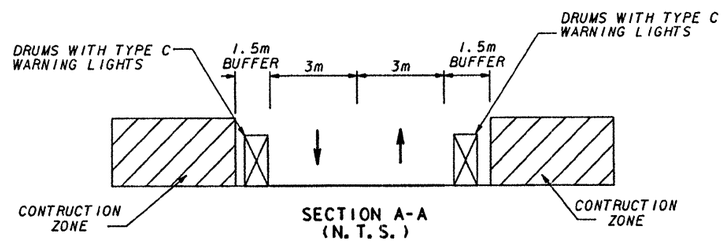

SECTION A-A
(N. T. S.)

STATE OF TEXAS
BRENT L. CHRISTIAN
73921
REGISTERED PROFESSIONAL ENGINEER

Brent L. Christian
5/5/97

NO.	DATE	REVISION	APPROV.

Texas Department of Transportation
LOOP 1604

SEQUENCE OF WORK
PHASE 2A
STA. 11+760 TO STA. 12+120

SHEET 8 OF 15

Kimley-Horn and Associates, Inc.

Designed	REK	DIST	FED REG	FEDERAL AID PROJECT			HIGHWAY
Checked	BLC	15	6				LP1604
Drawn	REK	COUNTY		CONTROL	SECT	JOB	SHEET
Checked	BLC	BEXAR		2452	01	035	90

LEVELS DISPLAYED

H:\DRAWINGS\6731603\TCP\604TP207a.DGN

LEGEND

- CONCRETE TRAFFIC BARRIER (CTB)
- VIA (SFPM)
- CONSTRUCTION SIGN
- TRAFFIC FLOW DIRECTION
- DRAINAGE CONSTRUCTION
- (X) SEE SCHEDULE OF BARRICADES
- TO BE REMOVED
- DETOUR
- NEW ROADWAY PAVEMENT
- DRUMS WITH TYPE C WARNING LIGHTS

SCALE: 1:1000

ESTIMATED QUANTITIES

ITEM	UNIT	QTY
WRK ZN PAV MRK REMOV (W)(SLD)(100mm)	M	
WRK ZN PAV MRK REMOV (W)(BRK)(100mm)	M	
WRK ZN PAV MRK REMOV (Y)(SLD)(100mm)	M	
WRK ZN PAV MRK NON-REMV (W)(SLD)(100mm)	M	725
WRK ZN PAV MRK NON-REMV (W)(BRK)(100mm)	M	
WRK ZN PAV MRK NON-REMV (Y)(SLD)(100mm)	M	725
ELIM EXT PAV MRK & MRKR (100mm)	M	
VEH IMP ATTN ASSEM BRLS (PLACE)	EA	
VEH IMP ATTN ASSEM BRLS (MOVE & RESET)	EA	
VEH IMP ATTN ASSEM BRLS (REMOVE)	EA	
RAIS PAV MRKR CL B (REFL) TY II-C-R	EA	
PORT CONC TRF BAR (FURN & INSTL)	M	
PORT CONC TRF BAR (MOVE & RESET)	M	
PORT CONC TRF BAR (REMOVE)	M	
CONSTRUCT DETOURS (CL 3)	M2	

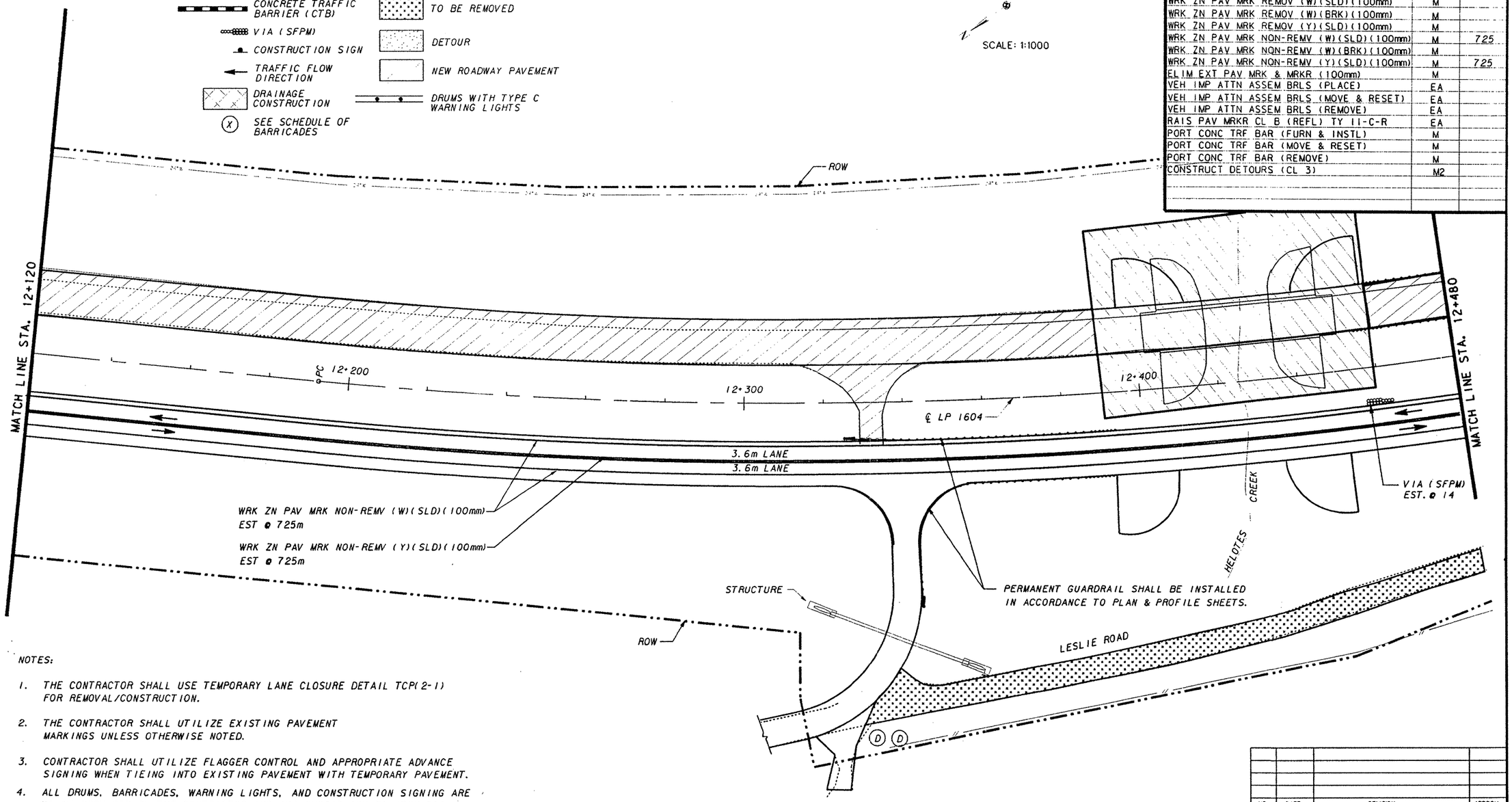

NOTES:

1. THE CONTRACTOR SHALL USE TEMPORARY LANE CLOSURE DETAIL TCP(2-1) FOR REMOVAL/CONSTRUCTION.
2. THE CONTRACTOR SHALL UTILIZE EXISTING PAVEMENT MARKINGS UNLESS OTHERWISE NOTED.
3. CONTRACTOR SHALL UTILIZE FLAGGER CONTROL AND APPROPRIATE ADVANCE SIGNING WHEN TIEING INTO EXISTING PAVEMENT WITH TEMPORARY PAVEMENT.
4. ALL DRUMS, BARRICADES, WARNING LIGHTS, AND CONSTRUCTION SIGNING ARE TO BE PROVIDED BY THE CONTRACTOR AND ARE SUBSIDIARY TO ITEM 502.
5. THE CONTRACTOR SHALL USE BLACK BASE ON ALL DETOURS AND AT BRAUN ROAD, NEW GUILBEAU, BOWENS CROSSING, AND SHAENFIELD INTERSECTIONS. SEE INTERSECTION LAYOUTS FOR LIMITS OF BLACK BASE. ASPHALT SHALL BE PLACED BETWEEN BLACK BASE AND TOP OF EXISTING PAVEMENT AT 3:1 SLOPE. ASPHALT SLOPE SHALL BE USED BETWEEN PLACEMENT OF EACH LIFT OF BLACK BASE IF BOTH LIFTS CANNOT BE COMPLETED IN ONE (1) DAY. SLOPE SHALL BE REMOVED PRIOR TO PLACEMENT OF SECOND LIFT.

NO.	DATE	REVISION	APPROV.

Texas Department of Transportation
LOOP 1604

SEQUENCE OF WORK
PHASE 2
STA. 12+120 TO STA. 12+480

SHEET 9 OF 15

STATE OF TEXAS
BRENT L. CHRISTIAN
73921
REGISTERED PROFESSIONAL ENGINEER

Brent Christian
5/5/97

Kimley-Horn and Associates, Inc.

Designed	REK	DIST	FED REG	FEDERAL AID PROJECT #				HIGHWAY
Checked	BLC	15	6					LP1604
Drawn	REK	COUNTY		CONTROL	SECT	JOB		SHEET
Checked	BLC	BEXAR		2452	01	035		91

LEVELS DISPLAYED																
1	2	3	4	5	6	7	8	9	10	11	12	13	14	15	16	
17	18	19	20	21	22	23	24	25	26	27	28	29	30	31	32	
33	34	35	36	37	38	39	40	41	42	43	44	45	46	47	48	
49	50	51	52	53	54	55		57	58	59	60	61	62	63		

H:\DRAWINGS\6731603\TCP\604TP208.DGN

LEGEND

- CONCRETE TRAFFIC BARRIER (CTB)
- VIA (SFPM)
- CONSTRUCTION SIGN
- TRAFFIC FLOW DIRECTION
- DRAINAGE CONSTRUCTION
- (X) SEE SCHEDULE OF BARRICADES
- TO BE REMOVED
- DETOUR
- NEW ROADWAY PAVEMENT
- DRUMS WITH TYPE C WARNING LIGHTS

SCALE: 1:1000

ESTIMATED QUANTITIES

ITEM	UNIT	QTY
WRK ZN PAV MRK REMOV (W)(SLD)(100mm)	M	
WRK ZN PAV MRK REMOV (W)(BRK)(100mm)	M	
WRK ZN PAV MRK REMOV (Y)(SLD)(100mm)	M	
WRK ZN PAV MRK NON-REMV (W)(SLD)(100mm)	M	721
WRK ZN PAV MRK NON-REMV (W)(BRK)(100mm)	M	
WRK ZN PAV MRK NON-REMV (Y)(SLD)(100mm)	M	721
ELIM EXT PAV MRK & MRKR (100mm)	M	
VEH IMP ATTN ASSEM BRLS (PLACE)	EA	
VEH IMP ATTN ASSEM BRLS (MOVE & RESET)	EA	
VEH IMP ATTN ASSEM BRLS (REMOVE)	EA	
RAIS PAV MRKR CL B (REFL) TY II-C-R	EA	
PORT CONC TRF BAR (FURN & INSTL)	M	
PORT CONC TRF BAR (MOVE & RESET)	M	
PORT CONC TRF BAR (REMOVE)	M	
CONSTRUCT DETOURS (CL 3)	M2	

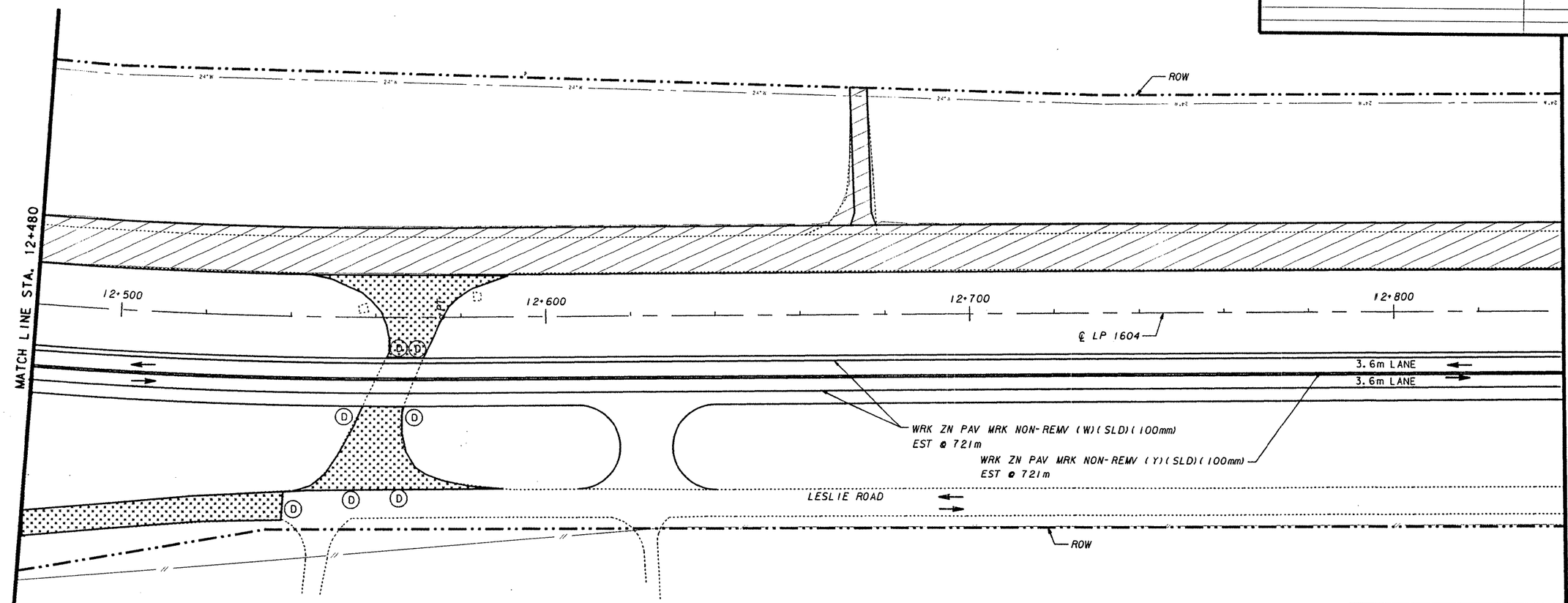

NOTES:

1. THE CONTRACTOR SHALL USE TEMPORARY LANE CLOSURE DETAIL TCP(2-1) FOR REMOVAL/CONSTRUCTION.
2. THE CONTRACTOR SHALL UTILIZE EXISTING PAVEMENT MARKINGS UNLESS OTHERWISE NOTED.
3. CONTRACTOR SHALL UTILIZE FLAGGER CONTROL AND APPROPRIATE ADVANCE SIGNING WHEN TIEING INTO EXISTING PAVEMENT WITH TEMPORARY PAVEMENT.
4. ALL DRUMS, BARRICADES, WARNING LIGHTS, AND CONSTRUCTION SIGNING ARE TO BE PROVIDED BY THE CONTRACTOR AND ARE SUBSIDIARY TO ITEM 502.
5. THE CONTRACTOR SHALL USE BLACK BASE ON ALL DETOURS AND AT BRAUN ROAD, NEW GUILBEAU, BOWENS CROSSING, AND SHAENFIELD INTERSECTIONS. SEE INTERSECTION LAYOUTS FOR LIMITS OF BLACK BASE. ASPHALT SHALL BE PLACED BETWEEN BLACK BASE AND TOP OF EXISTING PAVEMENT AT 3:1 SLOPE. ASPHALT SLOPE SHALL BE USED BETWEEN PLACEMENT OF EACH LIFT OF BLACK BASE IF BOTH LIFTS CANNOT BE COMPLETED IN ONE (1) DAY. SLOPE SHALL BE REMOVED PRIOR TO PLACEMENT OF SECOND LIFT.

H:\DRAWINGS\673160 3\TCP\604TP209.DGN

LEVELS DISPLAYED

1	2	3	4	5	6	7	8	9	10	11	12	13	14	15	16		
17	18	19	20	21	22	23	24	25	26	27	28	29	30	31	32		
33	34	35	36	37	38	39	40	41	42	43	44	45	46	47	48		
49	50	51	52	53	54	55		57	58	59	60	61	62	63			

NO.	DATE	REVISION	APPROV.

Texas Department of Transportation
LOOP 1604

SEQUENCE OF WORK

PHASE 2
STA. 12+480 TO 12+840

SHEET 10 OF 15

STATE OF TEXAS
BRENT L. CHRISTIAN
73921
REGISTERED
PROFESSIONAL ENGINEER

Brent L. Christian
5/5/97

Kimley-Horn and Associates, Inc.

Designed	REK	DIST	FED REG	FEDERAL AID PROJECT				HIGHWAY
Checked	BLC	15	6					LP1604
Drawn	REK	COUNTY		CONTROL	SECT	JOB		SHEET
Checked	BLC	BEXAR		2452	01	035		92

LEGEND

- CONCRETE TRAFFIC BARRIER (CTB)
- VIA (SFPM)
- CONSTRUCTION SIGN
- TRAFFIC FLOW DIRECTION
- DRAINAGE CONSTRUCTION
- (X) SEE SCHEDULE OF BARRICADES
- TO BE REMOVED
- DETOUR
- NEW ROADWAY PAVEMENT
- DRUMS WITH TYPE C WARNING LIGHTS

SCALE: 1:1000

ESTIMATED QUANTITIES		
ITEM	UNIT	QTY
WRK ZN PAV MRK REMOV (W)(SLD)(100mm)	M	
WRK ZN PAV MRK REMOV (W)(BRK)(100mm)	M	
WRK ZN PAV MRK REMOV (Y)(SLD)(100mm)	M	
WRK ZN PAV MRK NON-REMV (W)(SLD)(100mm)	M	720
WRK ZN PAV MRK NON-REMV (W)(BRK)(100mm)	M	
WRK ZN PAV MRK NON-REMV (Y)(SLD)(100mm)	M	720
ELIM EXT PAV MRK & MRKR (100mm)	M	
VEH IMP ATTN ASSEM BRLS (PLACE)	EA	
VEH IMP ATTN ASSEM BRLS (MOVE & RESET)	EA	
VEH IMP ATTN ASSEM BRLS (REMOVE)	EA	
RAIS PAV MRKR CL B (REFL) TY II-C-R	EA	
PORT CONC TRF BAR (FURN & INSTL)	M	
PORT CONC TRF BAR (MOVE & RESET)	M	
PORT CONC TRF BAR (REMOVE)	M	
CONSTRUCT DETOURS (CL 3)	M2	

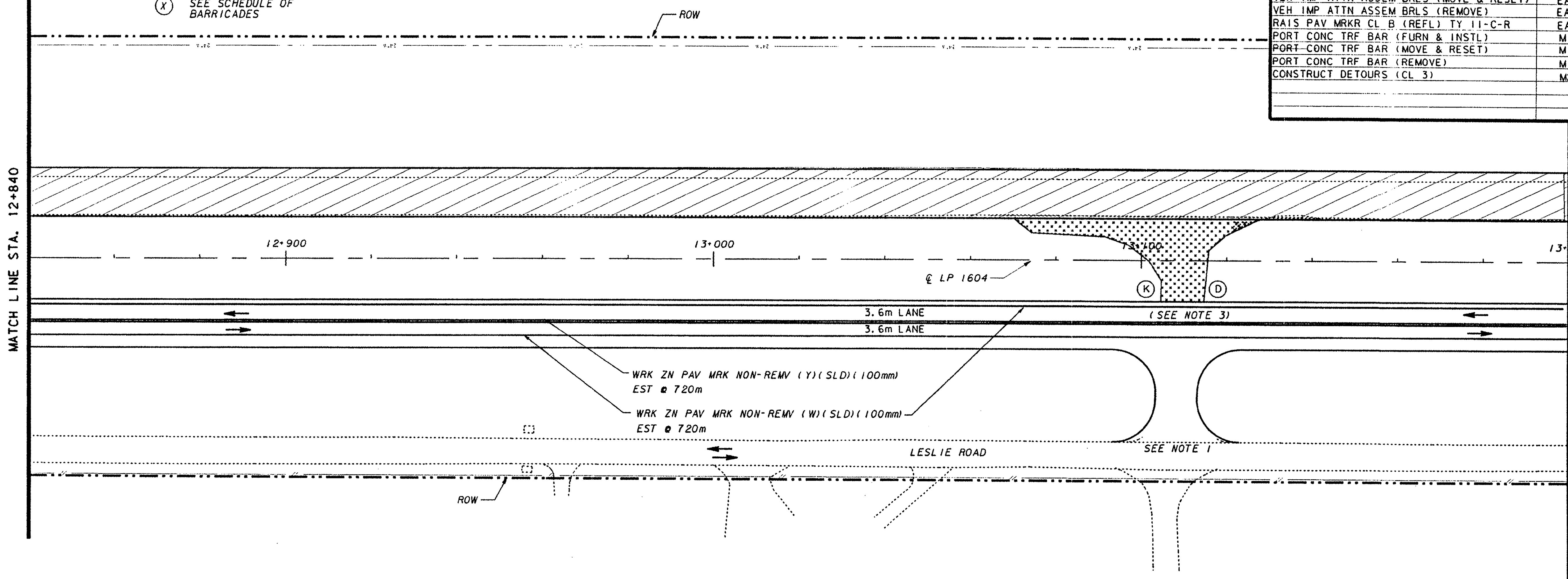

NOTES:

1. THE CONTRACTOR SHALL USE TEMPORARY LANE CLOSURE DETAIL TCP(2-1) FOR REMOVAL/CONSTRUCTION.

2. THE CONTRACTOR SHALL UTILIZE EXISTING PAVEMENT MARKINGS UNLESS OTHERWISE NOTED.

3. CONTRACTOR SHALL UTILIZE FLAGGER CONTROL AND APPROPRIATE ADVANCE SIGNING WHEN TIEING INTO EXISTING PAVEMENT WITH TEMPORARY PAVEMENT.

4. ALL DRUMS, BARRICADES, WARNING LIGHTS, AND CONSTRUCTION SIGNING ARE TO BE PROVIDED BY THE CONTRACTOR AND ARE SUBSIDIARY TO ITEM 502.

5. THE CONTRACTOR SHALL USE BLACK BASE ON ALL DETOURS AND AT BRAUN ROAD, NEW GUILBEAU, BOWENS CROSSING, AND SHAENFIELD INTERSECTIONS. SEE INTERSECTION LAYOUTS FOR LIMITS OF BLACK BASE. ASPHALT SHALL BE PLACED BETWEEN BLACK BASE AND TOP OF EXISTING PAVEMENT AT 3:1 SLOPE. ASPHALT SLOPE SHALL BE USED BETWEEN PLACEMENT OF EACH LIFT OF BLACK BASE IF BOTH LIFTS CANNOT BE COMPLETED IN ONE (1) DAY. SLOPE SHALL BE REMOVED PRIOR TO PLACEMENT OF SECOND LIFT.

LEVELS DISPLAYED

1	2	3	4	5	6	7	8	9	10	11	12	13	14	15	16
17	18	19	20	21	22	23	24	25	26	27	28	29	30	31	32
33	34	35	36	37	38	39	40	41	42	43	44	45	46	47	48
49	50	51	52	53	54	55		57	58	59	60	61	62	63	

H:\DRAWINGS\6731603\TCP\604TP210.DGN

STATE OF TEXAS
BRENT L. CHRISTIAN
73921
REGISTERED PROFESSIONAL ENGINEER
Brent L. Christian
5/5/97

NO.	DATE	REVISION	APPROV.

Texas Department of Transportation
LOOP 1604

SEQUENCE OF WORK
PHASE 2
STA. 12+840 TO 13+200

SHEET 11 OF 15

Kimley-Horn and Associates, Inc.

Designed	REK	DIST	FED REG	FEDERAL AID PROJECT			HIGHWAY
Checked	BLC	15	6				LP1604
Drawn	REK	COUNTY		CONTROL	SECT	JOB	SHEET
Checked	BLC	BEXAR		2452	01	035	93

LEGEND

- CONCRETE TRAFFIC BARRIER (CTB)
- VIA (SFPM)
- CONSTRUCTION SIGN
- TRAFFIC FLOW DIRECTION
- DRAINAGE CONSTRUCTION
- (X) SEE SCHEDULE OF BARRICADES
- TO BE REMOVED
- DETOUR
- NEW ROADWAY PAVEMENT
- DRUMS WITH TYPE C WARNING LIGHTS

SCALE: 1:1000

ESTIMATED QUANTITIES

ITEM	UNIT	QTY
WRK ZN PAV MRK REMOV (W)(SLD)(100mm)	M	
WRK ZN PAV MRK REMOV (W)(BRK)(100mm)	M	
WRK ZN PAV MRK REMOV (Y)(SLD)(100mm)	M	
WRK ZN PAV MRK NON-REMV (W)(SLD)(100mm)	M	646
WRK ZN PAV MRK NON-REMV (W)(BRK)(100mm)	M	
WRK ZN PAV MRK NON-REMV (Y)(SLD)(100mm)	M	682
ELIM EXT PAV MRK & MRKR (100mm)	M	
VEH IMP ATTN ASSEM BRLS (PLACE)	EA	
VEH IMP ATTN ASSEM BRLS (MOVE & RESET)	EA	
VEH IMP ATTN ASSEM BRLS (REMOVE)	EA	
RAIS PAV MRKR CL B (REFL) TY II-C-R	EA	
PORT CONC TRF BAR (FURN & INSTL)	M	
PORT CONC TRF BAR (MOVE & RESET)	M	
PORT CONC TRF BAR (REMOVE)	M	
CONSTRUCT DETOURS (CL 3)	M2	

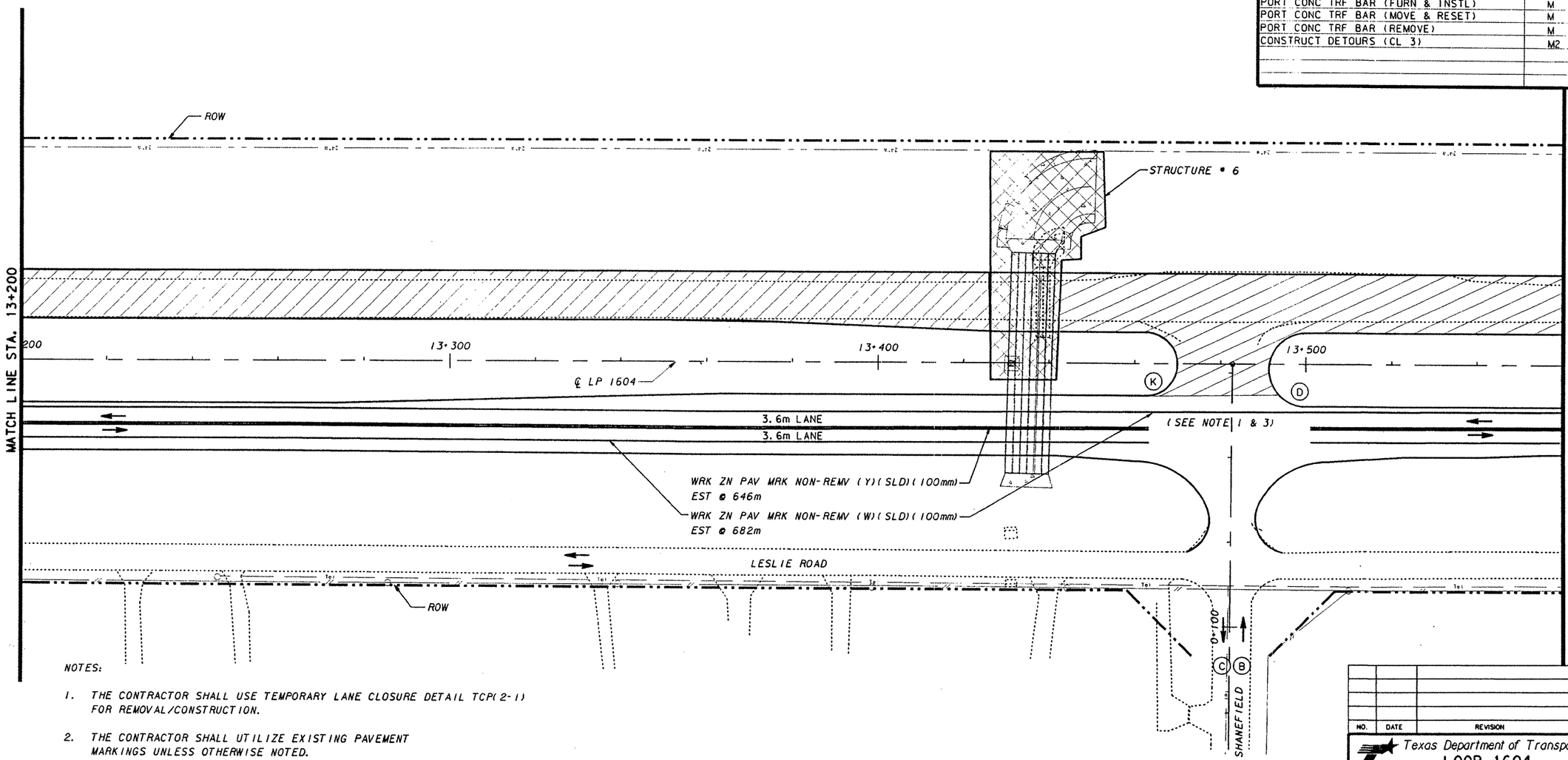

NOTES:

1. THE CONTRACTOR SHALL USE TEMPORARY LANE CLOSURE DETAIL TCP(2-1) FOR REMOVAL/CONSTRUCTION.
2. THE CONTRACTOR SHALL UTILIZE EXISTING PAVEMENT MARKINGS UNLESS OTHERWISE NOTED.
3. CONTRACTOR SHALL UTILIZE FLAGGER CONTROL AND APPROPRIATE ADVANCE SIGNING WHEN TIEING INTO EXISTING PAVEMENT WITH TEMPORARY PAVEMENT.
4. ALL DRUMS, BARRICADES, WARNING LIGHTS, AND CONSTRUCTION SIGNING ARE TO BE PROVIDED BY THE CONTRACTOR AND ARE SUBSIDIARY TO ITEM 502.
5. THE CONTRACTOR SHALL USE BLACK BASE ON ALL DETOURS AND AT BRAUN ROAD, NEW GUILBEAU, BOWENS CROSSING, AND SHAENFIELD INTERSECTIONS. SEE INTERSECTION LAYOUTS FOR LIMITS OF BLACK BASE. ASPHALT SHALL BE PLACED BETWEEN BLACK BASE AND TOP OF EXISTING PAVEMENT AT 3:1 SLOPE. ASPHALT SLOPE SHALL BE USED BETWEEN PLACEMENT OF EACH LIFT OF BLACK BASE IF BOTH LIFTS CANNOT BE COMPLETED IN ONE (1) DAY. SLOPE SHALL BE REMOVED PRIOR TO PLACEMENT OF SECOND LIFT.

NO.	DATE	REVISION	APPROV.

Texas Department of Transportation
LOOP 1604

SEQUENCE OF WORK
PHASE 2
STA. 13+200 TO STA. 13+560

SHEET 12 OF 15

STATE OF TEXAS
BRENT L. CHRISTIAN
73921
REGISTERED PROFESSIONAL ENGINEER

Brent L. Christian
5/5/97

Kimley-Horn and Associates, Inc.

Designed	REK	DIST	FED REG	FEDERAL AID PROJECT #				HIGHWAY
Checked	BLC	15	6					LP1604
Drawn	REK	COUNTY			CONTROL	SECT	JOB	SHEET
Checked	BLC	BEXAR			2452	01	035	94

LEVELS DISPLAYED
1 2 3 4 5 6 7 8 9 10 11 12 13 14 15 16
17 18 19 20 21 22 23 24 25 26 27 28 29 30 31 32
33 34 35 36 37 38 39 40 41 42 43 44 45 46 47 48
49 50 51 52 53 54 55 56 57 58 59 60 61 62 63

H:\DRAWINGS\67316031\TCP\604TP211.DGN

LEGEND

- CONCRETE TRAFFIC BARRIER (CTB)
- VIA (SFPM)
- CONSTRUCTION SIGN
- TRAFFIC FLOW DIRECTION
- DRAINAGE CONSTRUCTION
- (X) SEE SCHEDULE OF BARRICADES
- TO BE REMOVED
- DETOUR
- NEW ROADWAY PAVEMENT
- DRUMS WITH TYPE C WARNING LIGHTS

SCALE: 1:1000

ESTIMATED QUANTITIES		
ITEM	UNIT	QTY
WRK ZN PAV MRK REMOV (W)(SLD)(100mm)	M	
WRK ZN PAV MRK REMOV (W)(BRK)(100mm)	M	
WRK ZN PAV MRK REMOV (Y)(SLD)(100mm)	M	
WRK ZN PAV MRK NON-REMV (W)(SLD)(100mm)	M	720
WRK ZN PAV MRK NON-REMV (W)(BRK)(100mm)	M	
WRK ZN PAV MRK NON-REMV (Y)(SLD)(100mm)	M	720
ELIM EXT PAV MRK & MRKR (100mm)	M	
VEH IMP ATTN ASSEM BRLS (PLACE)	EA	
VEH IMP ATTN ASSEM BRLS (MOVE & RESET)	EA	
VEH IMP ATTN ASSEM BRLS (REMOVE)	EA	
RAIS PAV MRKR CL B (REFL) TY II-C-R	EA	
PORT CONC TRF BAR (FURN & INSTL)	M	
PORT CONC TRF BAR (MOVE & RESET)	M	
PORT CONC TRF BAR (REMOVE)	M	
CONSTRUCT DETOURS (CL 3)	M2	

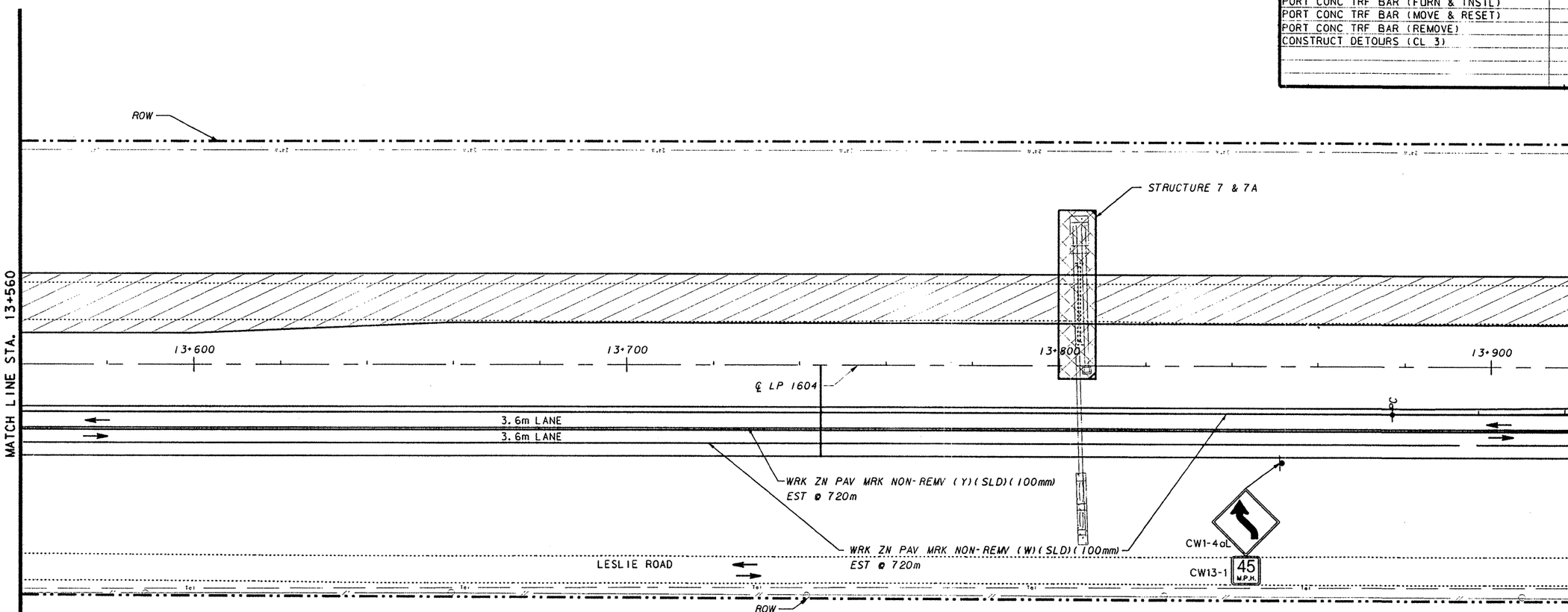

NOTES:

1. THE CONTRACTOR SHALL USE TEMPORARY LANE CLOSURE DETAIL TCP(2-1) FOR REMOVAL/CONSTRUCTION.
2. THE CONTRACTOR SHALL UTILIZE EXISTING PAVEMENT MARKINGS UNLESS OTHERWISE NOTED.
3. CONTRACTOR SHALL UTILIZE FLAGGER CONTROL AND APPROPRIATE ADVANCE SIGNING WHEN TIEING INTO EXISTING PAVEMENT WITH TEMPORARY PAVEMENT.
4. ALL DRUMS, BARRICADES, WARNING LIGHTS, AND CONSTRUCTION SIGNING ARE TO BE PROVIDED BY THE CONTRACTOR AND ARE SUBSIDIARY TO ITEM 502.
5. THE CONTRACTOR SHALL USE BLACK BASE ON ALL DETOURS AND AT BRAUN ROAD, NEW GUILBEAU, BOWENS CROSSING, AND SHAENFIELD INTERSECTIONS. SEE INTERSECTION LAYOUTS FOR LIMITS OF BLACK BASE. ASPHALT SHALL BE PLACED BETWEEN BLACK BASE AND TOP OF EXISTING PAVEMENT AT 3:1 SLOPE. ASPHALT SLOPE SHALL BE USED BETWEEN PLACEMENT OF EACH LIFT OF BLACK BASE IF BOTH LIFTS CANNOT BE COMPLETED IN ONE (1) DAY. SLOPE SHALL BE REMOVED PRIOR TO PLACEMENT OF SECOND LIFT.

NO.	DATE	REVISION	APPROV.

Texas Department of Transportation
LOOP 1604

SEQUENCE OF WORK
PHASE 2
STA. 13+560 TO STA. 13+920

SHEET 13 OF 15

Kimley-Horn and Associates, Inc.

STATE OF TEXAS
BRENT L. CHRISTIAN
73921
REGISTERED PROFESSIONAL ENGINEER

Brent L. Christian
5/5/97

Designed	REK	DIST	FED REG	FEDERAL AID PROJECT			HIGHWAY
Checked	BLC	15	6				LP1604
Drawn	REK	COUNTY		CONTROL	SECT	JOB	SHEET
Checked	BLC	BEXAR		2452	01	035	95

H:\DRAWINGS\6731603\TCP\604TP212.DGN

LEGEND

- CONCRETE TRAFFIC BARRIER (CTB)
- VIA (SFPM)
- CONSTRUCTION SIGN
- TRAFFIC FLOW DIRECTION
- DRAINAGE CONSTRUCTION
- (X) SEE SCHEDULE OF BARRICADES
- TO BE REMOVED
- DETOUR
- NEW ROADWAY PAVEMENT
- DRUMS WITH TYPE C WARNING LIGHTS

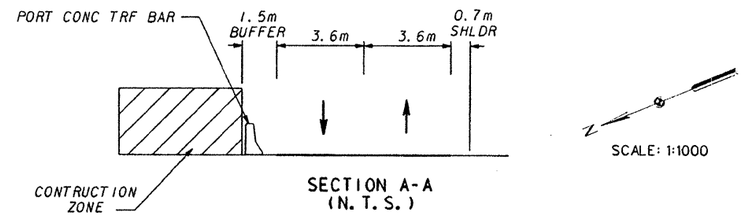

SECTION A-A
(N.T.S.)

ESTIMATED QUANTITIES		
ITEM	UNIT	QTY
WRK ZN PAV MRK REMOV (W)(SLD)(100mm)	M	
WRK ZN PAV MRK REMOV (W)(BRK)(100mm)	M	
WRK ZN PAV MRK REMOV (Y)(SLD)(100mm)	M	
WRK ZN PAV MRK NON-REMV (W)(SLD)(100mm)	M	720
WRK ZN PAV MRK NON-REMV (W)(BRK)(100mm)	M	
WRK ZN PAV MRK NON-REMV (Y)(SLD)(100mm)	M	720
ELIM EXT PAV MRK & MRKR (100mm)	M	
VEH IMP ATTN ASSEM BRLS (PLACE)	EA	
VEH IMP ATTN ASSEM BRLS (MOVE & RESET)	EA	14
VEH IMP ATTN ASSEM BRLS (REMOVE)	EA	14
RAIS PAV MRKR CL B (REFL) TY II-C-R	EA	
PORT CONC TRF BAR (FURN & INSTL)	M	
PORT CONC TRF BAR (MOVE & RESET)	M	81.9
PORT CONC TRF BAR (REMOVE)	M	81.9
CONSTRUCT DETOURS (CL 3)	M2	

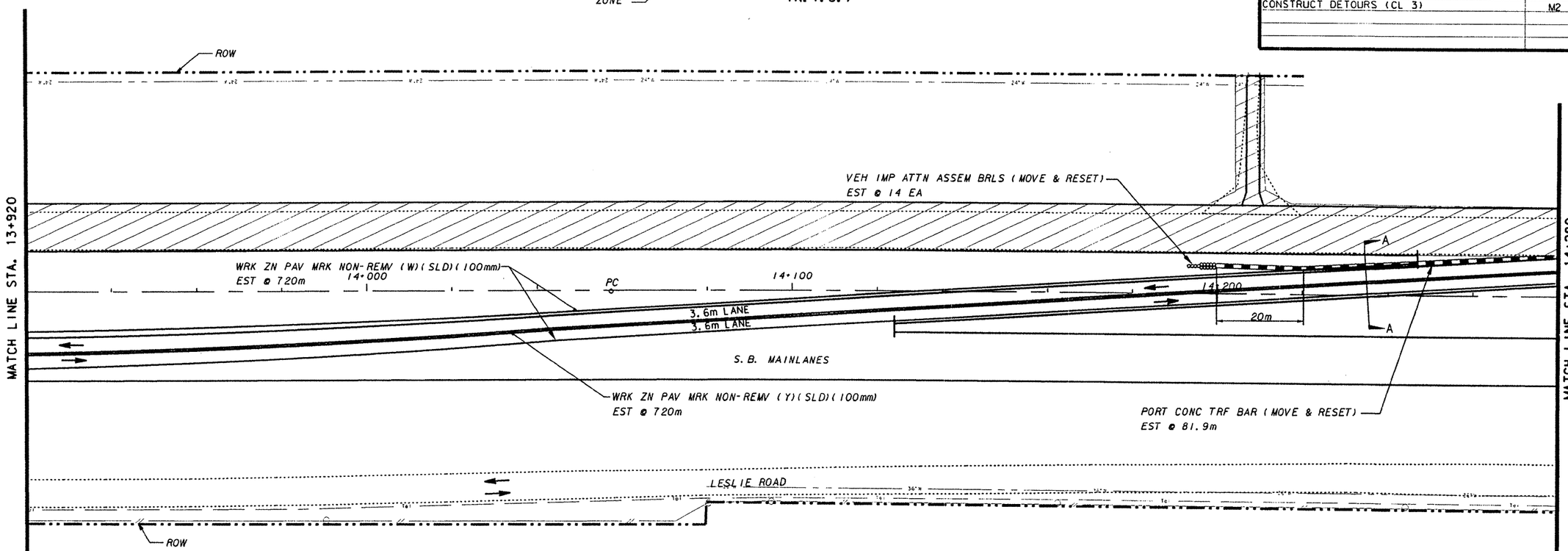

NOTES:

1. THE CONTRACTOR SHALL USE TEMPORARY LANE CLOSURE DETAIL TCP(2-1) FOR REMOVAL/CONSTRUCTION.
2. THE CONTRACTOR SHALL UTILIZE EXISTING PAVEMENT MARKINGS UNLESS OTHERWISE NOTED.
3. CONTRACTOR SHALL UTILIZE FLAGGER CONTROL AND APPROPRIATE ADVANCE SIGNING WHEN TIEING INTO EXISTING PAVEMENT WITH TEMPORARY PAVEMENT.
4. ALL DRUMS, BARRICADES, WARNING LIGHTS, AND CONSTRUCTION SIGNING ARE TO BE PROVIDED BY THE CONTRACTOR AND ARE SUBSIDIARY TO ITEM 502.
5. THE CONTRACTOR SHALL USE BLACK BASE ON ALL DETOURS AND AT BRAUN ROAD, NEW GUILBEAU, BOWENS CROSSING, AND SHAENFIELD INTERSECTIONS. SEE INTERSECTION LAYOUTS FOR LIMITS OF BLACK BASE. ASPHALT SHALL BE PLACED BETWEEN BLACK BASE AND TOP OF EXISTING PAVEMENT AT 3:1 SLOPE. ASPHALT SLOPE SHALL BE USED BETWEEN PLACEMENT OF EACH LIFT OF BLACK BASE IF BOTH LIFTS CANNOT BE COMPLETED IN ONE (1) DAY. SLOPE SHALL BE REMOVED PRIOR TO PLACEMENT OF SECOND LIFT.

NO.	DATE	REVISION	APPROV.

Texas Department of Transportation
LOOP 1604

SEQUENCE OF WORK
PHASE 2
STA 13+920 TO STA 14+280

SHEET 14 OF 15

STATE OF TEXAS
BRENT L. CHRISTIAN
73921
REGISTERED PROFESSIONAL ENGINEER

Brent L. Christian
5/5/97

Kimley-Horn and Associates, Inc.

Designed	REK	DIST	FED REG	FEDERAL AID PROJECT			HIGHWAY
Checked	BLC	15	6				LP1604
Drawn	REK	COUNTY		CONTROL	SECT	JOB	SHEET
Checked	BLC	BEXAR		2452	01	035	96

LEVELS DISPLAYED

H:\DRAWINGS\6731603\TCP\604TP213.DGN

LEGEND

- CONCRETE TRAFFIC BARRIER (CTB)
- VIA (SFPM)
- CONSTRUCTION SIGN
- TRAFFIC FLOW DIRECTION
- DRAINAGE CONSTRUCTION
- (X) SEE SCHEDULE OF BARRICADES
- TO BE REMOVED
- DETOUR
- NEW ROADWAY PAVEMENT
- DRUMS WITH TYPE C WARNING LIGHTS

SECTION C-C

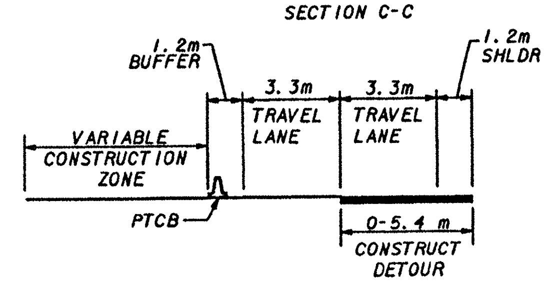

SCALE: 1:1000

ESTIMATED QUANTITIES		
ITEM	UNIT	QTY
WRK ZN PAV MRK REMOV (W)(SLD)(100mm)	M	
WRK ZN PAV MRK REMOV (W)(BRK)(100mm)	M	
WRK ZN PAV MRK REMOV (Y)(SLD)(100mm)	M	
WRK ZN PAV MRK NON-REMV (W)(SLD)(100mm)	M	720
WRK ZN PAV MRK NON-REMV (W)(BRK)(100mm)	M	
WRK ZN PAV MRK NON-REMV (Y)(SLD)(100mm)	M	720
ELIM EXT PAV MRK & MRKR (100mm)	M	
VEH IMP ATTN ASSEM BRLS (PLACE)	EA	
VEH IMP ATTN ASSEM BRLS (MOVE & RESET)	EA	14
VEH IMP ATTN ASSEM BRLS (REMOVE)	EA	14
RAIS PAV MRKR CL B (REFL) TY II-C-R	EA	
PORT CONC TRF BAR (FURN & INSTL)	M	
PORT CONC TRF BAR (MOVE & RESET)	M	109.2
PORT CONC TRF BAR (REMOVE)	M	109.2
CONSTRUCT DETOURS (CL 3)	M2	

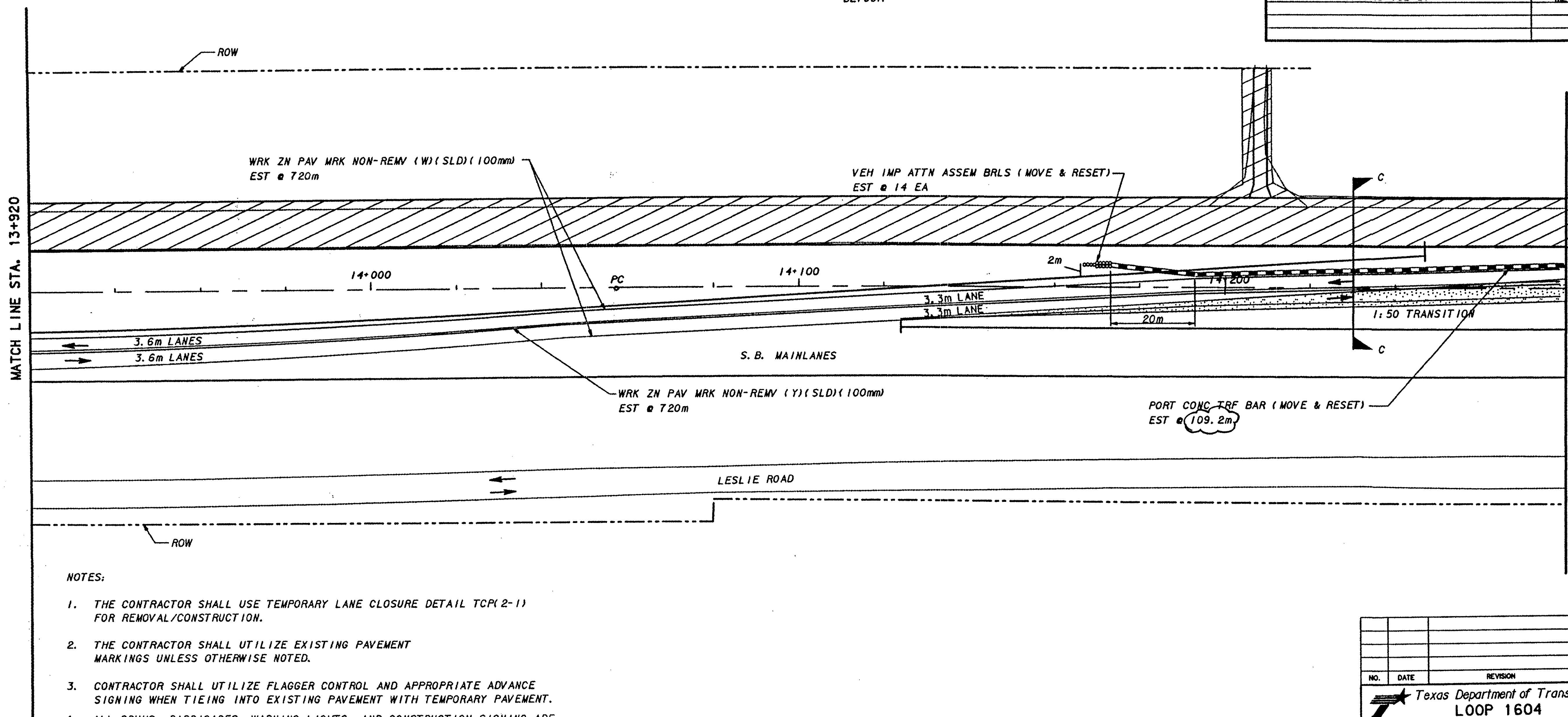

NOTES:

1. THE CONTRACTOR SHALL USE TEMPORARY LANE CLOSURE DETAIL TCP(2-1) FOR REMOVAL/CONSTRUCTION.
2. THE CONTRACTOR SHALL UTILIZE EXISTING PAVEMENT MARKINGS UNLESS OTHERWISE NOTED.
3. CONTRACTOR SHALL UTILIZE FLAGGER CONTROL AND APPROPRIATE ADVANCE SIGNING WHEN TIEING INTO EXISTING PAVEMENT WITH TEMPORARY PAVEMENT.
4. ALL DRUMS, BARRICADES, WARNING LIGHTS, AND CONSTRUCTION SIGNING ARE TO BE PROVIDED BY THE CONTRACTOR AND ARE SUBSIDIARY TO ITEM 502.
5. THE CONTRACTOR SHALL USE BLACK BASE ON ALL DETOURS AND AT BRAUN ROAD, NEW GUILBEAU, BOWENS CROSSING, AND SHAENFIELD INTERSECTIONS. SEE INTERSECTION LAYOUTS FOR LIMITS OF BLACK BASE. ASPHALT SHALL BE PLACED BETWEEN BLACK BASE AND TOP OF EXISTING PAVEMENT AT 3:1 SLOPE. ASPHALT SLOPE SHALL BE USED BETWEEN PLACEMENT OF EACH LIFT OF BLACK BASE IF BOTH LIFTS CANNOT BE COMPLETED IN ONE (1) DAY. SLOPE SHALL BE REMOVED PRIOR TO PLACEMENT OF SECOND LIFT.

LEVELS DISPLAYED															
1	2	3	4	5	6	7	8	9	10	11	12	13	14	15	16
17	18	19	20	21	22	23	24	25	26	27	28	29	30	31	32
33	34	35	36	37	38	39	40	41	42	43	44	45	46	47	48
49	50	51	52	53	54	55		57	58	59	60	61	62	63	

H:\DRAWINGS\6731603\TCP\604TP R21.DGN

STATE OF TEXAS
BRENT L. CHRISTIAN
73921
REGISTERED PROFESSIONAL ENGINEER

Brent L. Christian
4-20-98

CO#6

NO.	DATE	REVISION	APPROV.

Texas Department of Transportation
LOOP 1604

SEQUENCE OF WORK
PHASE 2
STA 13+920 TO STA 14+280

SHEET 14 OF 15

Kimley-Horn and Associates, Inc.

		DIST	FED REG	FEDERAL AID PROJECT			HIGHWAY
Designed	REK						
Checked	BLC	15	6	CD2452-1-35			LP1604
Drawn	REK	COUNTY		CONTROL	SECT	JOB	SHEET
Checked	BLC	BEXAR		2452	01	035	96

A

LEGEND

- CONCRETE TRAFFIC BARRIER (CTB)
- VIA (SFPM)
- CONSTRUCTION SIGN
- TRAFFIC FLOW DIRECTION
- DRAINAGE CONSTRUCTION
- (X) SEE SCHEDULE OF BARRICADES
- TO BE REMOVED
- DETOUR
- NEW ROADWAY PAVEMENT
- DRUMS WITH TYPE C WARNING LIGHTS

SCALE: 1:1000

ESTIMATED QUANTITIES

ITEM	UNIT	QTY
WRK ZN PAV MRK REMOV (W)(SLD)(100mm)	M	
WRK ZN PAV MRK REMOV (W)(BRK)(100mm)	M	
WRK ZN PAV MRK REMOV (Y)(SLD)(100mm)	M	
WRK ZN PAV MRK NON-REMV (W)(SLD)(100mm)	M	440
WRK ZN PAV MRK NON-REMV (W)(BRK)(100mm)	M	
WRK ZN PAV MRK NON-REMV (Y)(SLD)(100mm)	M	440
ELIM EXT PAV MRK & MRKR (100mm)	M	340
VEH IMP ATTN ASSEM BRLS (PLACE)	EA	
VEH IMP ATTN ASSEM BRLS (MOVE & RESET)	EA	14
VEH IMP ATTN ASSEM BRLS (REMOVE)	EA	14
RAIS PAV MRKR CL B (REFL) TY II-C-R	EA	
PORT CONC TRF BAR (FURN & INSTL)	M	
PORT CONC TRF BAR (MOVE & RESET)	M	236.6
PORT CONC TRF BAR (REMOVE)	M	236.6
CONSTRUCT DETOURS (CL 3)	M2	

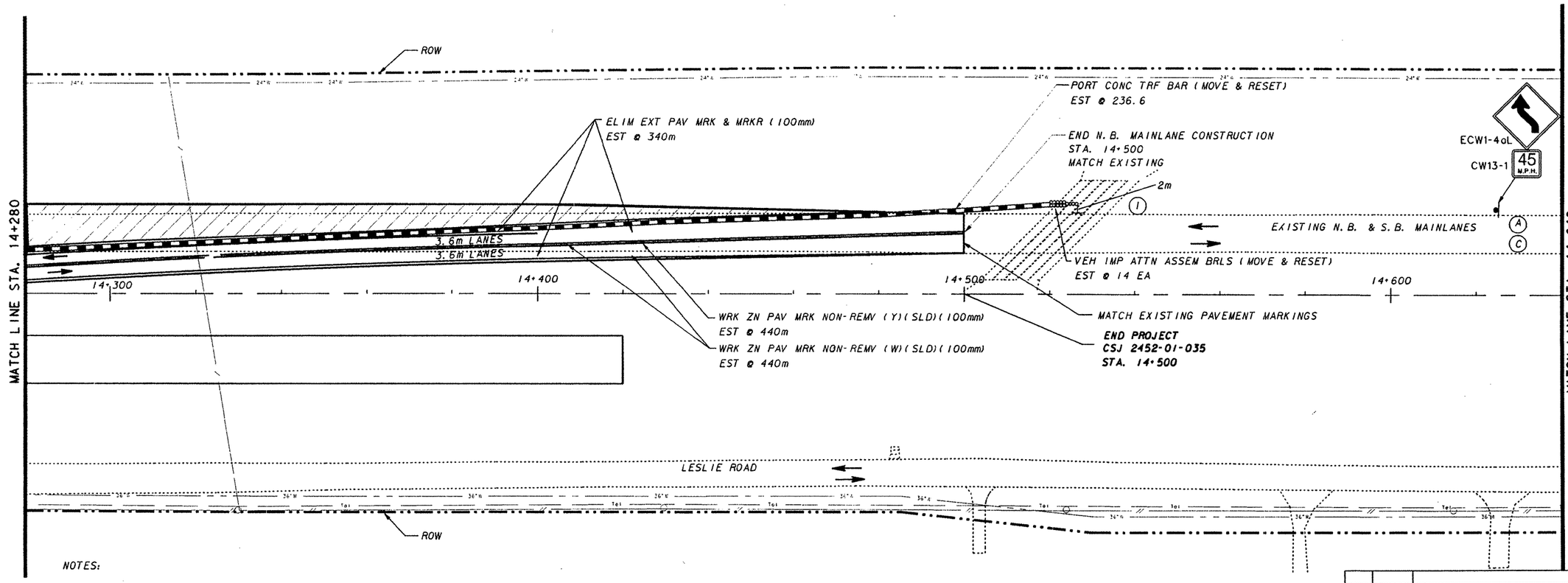

NOTES:

1. THE CONTRACTOR SHALL USE TEMPORARY LANE CLOSURE DETAIL TCP(2-1) FOR REMOVAL/CONSTRUCTION.
2. THE CONTRACTOR SHALL UTILIZE EXISTING PAVEMENT MARKINGS UNLESS OTHERWISE NOTED.
3. CONTRACTOR SHALL UTILIZE FLAGGER CONTROL AND APPROPRIATE ADVANCE SIGNING WHEN TIEING INTO EXISTING PAVEMENT WITH TEMPORARY PAVEMENT.
4. ALL DRUMS, BARRICADES, WARNING LIGHTS, AND CONSTRUCTION SIGNING ARE TO BE PROVIDED BY THE CONTRACTOR AND ARE SUBSIDIARY TO ITEM 502.
5. THE CONTRACTOR SHALL USE BLACK BASE ON ALL DETOURS AND AT BRAUN ROAD, NEW GUILBEAU, BOWENS CROSSING, AND SHAENFIELD INTERSECTIONS. SEE INTERSECTION LAYOUTS FOR LIMITS OF BLACK BASE. ASPHALT SHALL BE PLACED BETWEEN BLACK BASE AND TOP OF EXISTING PAVEMENT AT 3:1 SLOPE. ASPHALT SLOPE SHALL BE USED BETWEEN PLACEMENT OF EACH LIFT OF BLACK BASE IF BOTH LIFTS CANNOT BE COMPLETED IN ONE (1) DAY. SLOPE SHALL BE REMOVED PRIOR TO PLACEMENT OF SECOND LIFT.

NO.	DATE	REVISION	APPROV.

Texas Department of Transportation
LOOP 1604

SEQUENCE OF WORK
PHASE 2
STA. 14+280 TO STA. 14+640
SHEET 15 OF 15

STATE OF TEXAS
BRENT L. CHRISTIAN
73921
REGISTERED PROFESSIONAL ENGINEER
Brent L. Christian
5/5/97

Kimley-Horn and Associates, Inc.

Designed	REK	DIST	FED REG	FEDERAL AID PROJECT •			HIGHWAY
Checked	BLC	15	6				LP1604
Drawn	REK	COUNTY		CONTROL	SECT	JOB	SHEET
Checked	BLC	BEXAR		2452	01	035	97

LEVELS DISPLAYED
1 2 3 4 5 6 7 8 9 10 11 12 13 14 15 16
17 18 19 20 21 22 23 24 25 26 27 28 29 30 31 32
33 34 35 36 37 38 39 40 41 42 43 44 45 46 47 48
49 50 51 52 53 54 55 56 57 58 59 60 61 62 63

H:\DRAWINGS\67316031\TCP\604TP214.DGN

LEGEND

- CONCRETE TRAFFIC BARRIER (CTB)
- VIA (SFPM)
- CONSTRUCTION SIGN
- TRAFFIC FLOW DIRECTION
- DRAINAGE CONSTRUCTION
- (X) SEE SCHEDULE OF BARRICADES
- TO BE REMOVED
- DETOUR
- NEW ROADWAY PAVEMENT
- DRUMS WITH TYPE C WARNING LIGHTS

N

SCALE: 1:1000

ESTIMATED QUANTITIES

ITEM	UNIT	QTY
WRK ZN PAV MRK REMOV (W)(SLD)(100mm)	M	
WRK ZN PAV MRK REMOV (W)(BRK)(100mm)	M	
WRK ZN PAV MRK REMOV (Y)(SLD)(100mm)	M	
WRK ZN PAV MRK NON-REMV (W)(SLD)(100mm)	M	720
WRK ZN PAV MRK NON-REMV (W)(BRK)(100mm)	M	
WRK ZN PAV MRK NON-REMV (Y)(SLD)(100mm)	M	720
ELIM EXT PAV MRK & MRKR (100mm)	M	
VEH IMP ATTN ASSEM BRLS (PLACE)	EA	14
VEH IMP ATTN ASSEM BRLS (MOVE & RESET)	EA	14
VEH IMP ATTN ASSEM BRLS (REMOVE)	EA	14
RAIS PAV MRKR CL B (REFL) TY II-C-R	EA	
PORT CONC TRF BAR (FURN & INSTL)	M	
PORT CONC TRF BAR (MOVE & RESET)	M	336.7
PORT CONC TRF BAR (REMOVE)	M	336.7
CONSTRUCT DETOURS (CL 3)	M2	

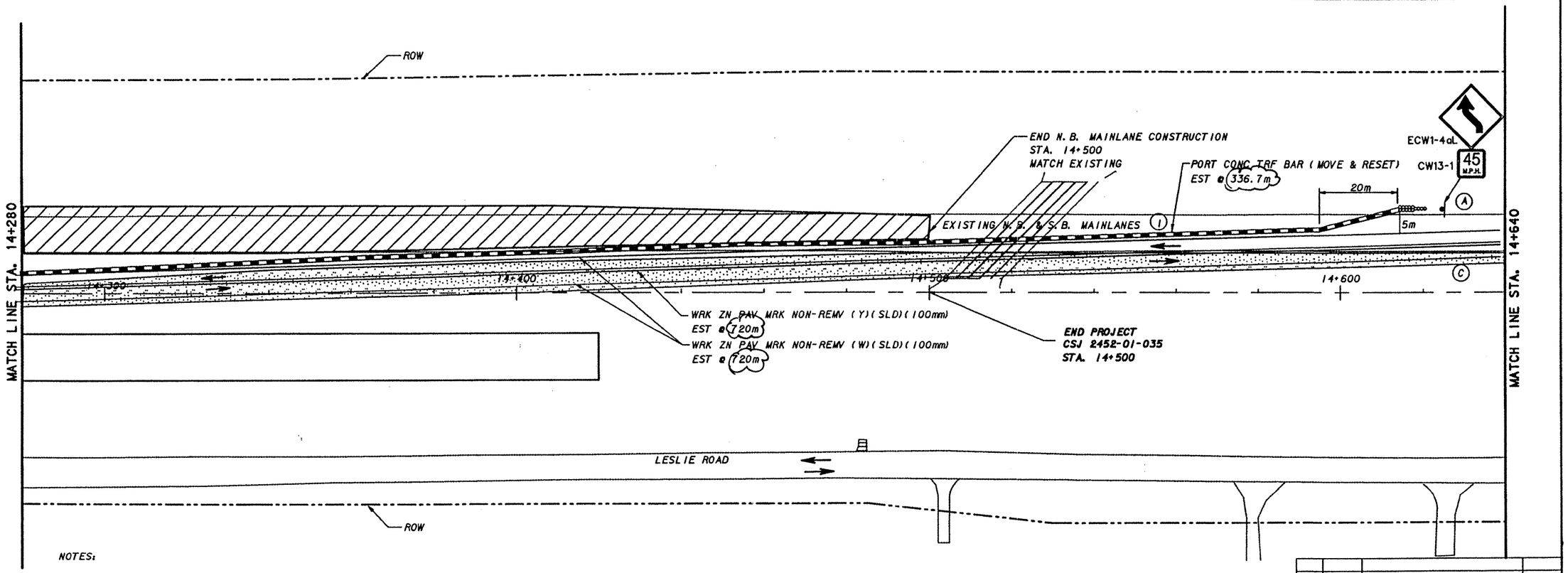

NOTES:

1. THE CONTRACTOR SHALL USE TEMPORARY LANE CLOSURE DETAIL TCP(2-1) FOR REMOVAL/CONSTRUCTION.
2. THE CONTRACTOR SHALL UTILIZE EXISTING PAVEMENT MARKINGS UNLESS OTHERWISE NOTED.
3. CONTRACTOR SHALL UTILIZE FLAGGER CONTROL AND APPROPRIATE ADVANCE SIGNING WHEN TIEING INTO EXISTING PAVEMENT WITH TEMPORARY PAVEMENT.
4. ALL DRUMS, BARRICADES, WARNING LIGHTS, AND CONSTRUCTION SIGNING ARE TO BE PROVIDED BY THE CONTRACTOR AND ARE SUBSIDIARY TO ITEM 502.
5. THE CONTRACTOR SHALL USE BLACK BASE ON ALL DETOURS AND AT BRAUN ROAD, NEW GUILBEAU, BOWENS CROSSING, AND SHAENFIELD INTERSECTIONS. SEE INTERSECTION LAYOUTS FOR LIMITS OF BLACK BASE. ASPHALT SHALL BE PLACED BETWEEN BLACK BASE AND TOP OF EXISTING PAVEMENT AT 3:1 SLOPE. ASPHALT SLOPE SHALL BE USED BETWEEN PLACEMENT OF EACH LIFT OF BLACK BASE IF BOTH LIFTS CANNOT BE COMPLETED IN ONE (1) DAY. SLOPE SHALL BE REMOVED PRIOR TO PLACEMENT OF SECOND LIFT.

NO.	DATE	REVISION	APPROV.

Texas Department of Transportation
LOOP 1604

SEQUENCE OF WORK
PHASE 2
STA. 14+280 TO STA. 14+640
SHEET 15 OF 15

Kimley-Horn and Associates, Inc.

STATE OF TEXAS
BRENT L. CHRISTIAN
73921
REGISTERED PROFESSIONAL ENGINEER

Brent L. Christian
4-20-98

CO#6

Designed	AEX	DIST	FED REG	FEDERAL AID PROJECT #			HIGHWAY
Checked	ALC	15	6	CD2452-1-35			LP1604
Drawn	AEX	COUNTY		CONTROL	SECT	JOB	SHEET
Checked	ALC	BEXAR		2452	01	035	97

A

H:\DRAWINGS\67316O3\TCP\604TPR21.DGN

LEVELS DISPLAYED

LEGEND

- CONCRETE TRAFFIC BARRIER (CTB)
- VIA (SFPM)
- CONSTRUCTION SIGN
- TRAFFIC FLOW DIRECTION
- DRAINAGE CONSTRUCTION
- (X) SEE SCHEDULE OF BARRICADES
- TO BE REMOVED
- DETOUR 720
- NEW ROADWAY PAVEMENT
- DRUMS WITH TYPE C WARNING LIGHTS

N

SCALE: 1:1000

ESTIMATED QUANTITIES		
ITEM	UNIT	QTY
WRK ZN PAV MRK REMOV (W)(SLD)(100mm)	M	260
WRK ZN PAV MRK REMOV (W)(BRK)(100mm)	M	
WRK ZN PAV MRK REMOV (Y)(SLD)(100mm)	M	260
WRK ZN PAV MRK NON-REMV (W)(SLD)(100mm)	M	
WRK ZN PAV MRK NON-REMV (W)(BRK)(100mm)	M	
WRK ZN PAV MRK NON-REMV (Y)(SLD)(100mm)	M	
ELIM EXT PAV MRK & MRKR (100mm)	M	
VEH IMP ATTN ASSEM BRLS (PLACE)	EA	
VEH IMP ATTN ASSEM BRLS (MOVE & RESET)	EA	
VEH IMP ATTN ASSEM BRLS (REMOVE)	EA	
RAIS PAV MRKR CL B (REFL) TY II-C-R	EA	
PORT CONC TRF BAR (FURN & INSTL)	M	
PORT CONC TRF BAR (MOVE & RESET)	M	
PORT CONC TRF BAR (REMOVE)	M	
CONSTRUCT DETOURS (CL 3)	M2	

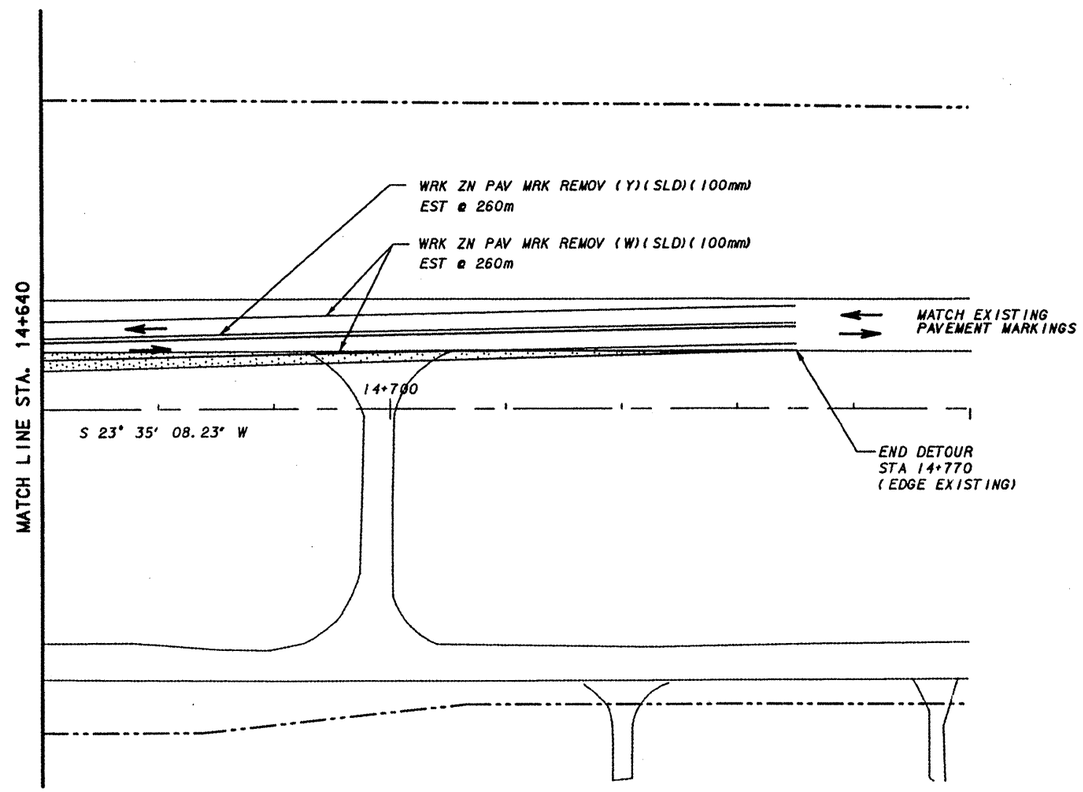

NOTES:

1. THE CONTRACTOR SHALL USE TEMPORARY LANE CLOSURE DETAIL TCP(2-1) FOR REMOVAL/CONSTRUCTION.
2. THE CONTRACTOR SHALL UTILIZE EXISTING PAVEMENT MARKINGS UNLESS OTHERWISE NOTED.
3. CONTRACTOR SHALL UTILIZE FLAGGER CONTROL AND APPROPRIATE ADVANCE SIGNING WHEN TIEING INTO EXISTING PAVEMENT WITH TEMPORARY PAVEMENT.
4. ALL DRUMS, BARRICADES, WARNING LIGHTS, AND CONSTRUCTION SIGNING ARE TO BE PROVIDED BY THE CONTRACTOR AND ARE SUBSIDIARY TO ITEM 502.
5. THE CONTRACTOR SHALL USE BLACK BASE ON ALL DETOURS AND AT BRAUN ROAD, NEW GUILBEAU, BOWENS CROSSING, AND SHAENFIELD INTERSECTIONS. SEE INTERSECTION LAYOUTS FOR LIMITS OF BLACK BASE. ASPHALT SHALL BE PLACED BETWEEN BLACK BASE AND TOP OF EXISTING PAVEMENT AT 3:1 SLOPE. ASPHALT SLOPE SHALL BE USED BETWEEN PLACEMENT OF EACH LIFT OF BLACK BASE IF BOTH LIFTS CANNOT BE COMPLETED IN ONE (1) DAY. SLOPE SHALL BE REMOVED PRIOR TO PLACEMENT OF SECOND LIFT.

NEW SHEET
CO#6

STATE OF TEXAS
BRENT L. CHRISTIAN
73921
REGISTERED PROFESSIONAL ENGINEER

Brent L. Christian
4-20-98

NO.	DATE	REVISION	APPROV.

Texas Department of Transportation
LOOP 1604

SEQUENCE OF WORK
PHASE 2
STA. 14+640 TO STA. 14+770

ADDITIONAL SHEET 16

Kimley-Horn and Associates, Inc.

Designed	REK	DIST	FED REG	FEDERAL AID PROJECT				HIGHWAY
Checked	BLC	15	6	CD2452-1-35				LP1604
Drawn	REK	COUNTY		CONTROL	SECT	JOB		SHEET
Checked	BLC	BEXAR		2452	01	035		97B

H:\DRAWINGS\673\603\TCP\604TP .DGN

LEGEND

- CONCRETE TRAFFIC BARRIER (CTB)
- VIA (SFPM)
- CONSTRUCTION SIGN
- TRAFFIC FLOW DIRECTION
- DRAINAGE CONSTRUCTION
- (X) SEE SCHEDULE OF BARRICADES
- TO BE REMOVED
- DETOUR
- NEW ROADWAY PAVEMENT
- DRUMS WITH TYPE C WARNING LIGHTS

SCALE: 1:1000

ESTIMATED QUANTITIES

ITEM	UNIT	QTY
WRK ZN PAV MRK REMOV (W)(SLD)(100mm)	M	
WRK ZN PAV MRK REMOV (W)(BRK)(100mm)	M	
WRK ZN PAV MRK REMOV (Y)(SLD)(100mm)	M	
WRK ZN PAV MRK NON-REMV (W)(SLD)(100mm)	M	
WRK ZN PAV MRK NON-REMV (W)(BRK)(100mm)	M	
WRK ZN PAV MRK NON-REMV (Y)(SLD)(100mm)	M	
ELIM EXT PAV MRK & MRKR (100mm)	M	
VEH IMP ATTN ASSEM BRLS (PLACE)	EA	
VEH IMP ATTN ASSEM BRLS (MOVE & RESET)	EA	
VEH IMP ATTN ASSEM BRLS (REMOVE)	EA	
RAIS PAV MRKR CL B (REFL) TY II-C-R	EA	
PORT CONC TRF BAR (FURN & INSTL)	M	
PORT CONC TRF BAR (MOVE & RESET)	M	
PORT CONC TRF BAR (REMOVE)	M	
CONSTRUCT DETOURS (CL 3)	M2	1423.4

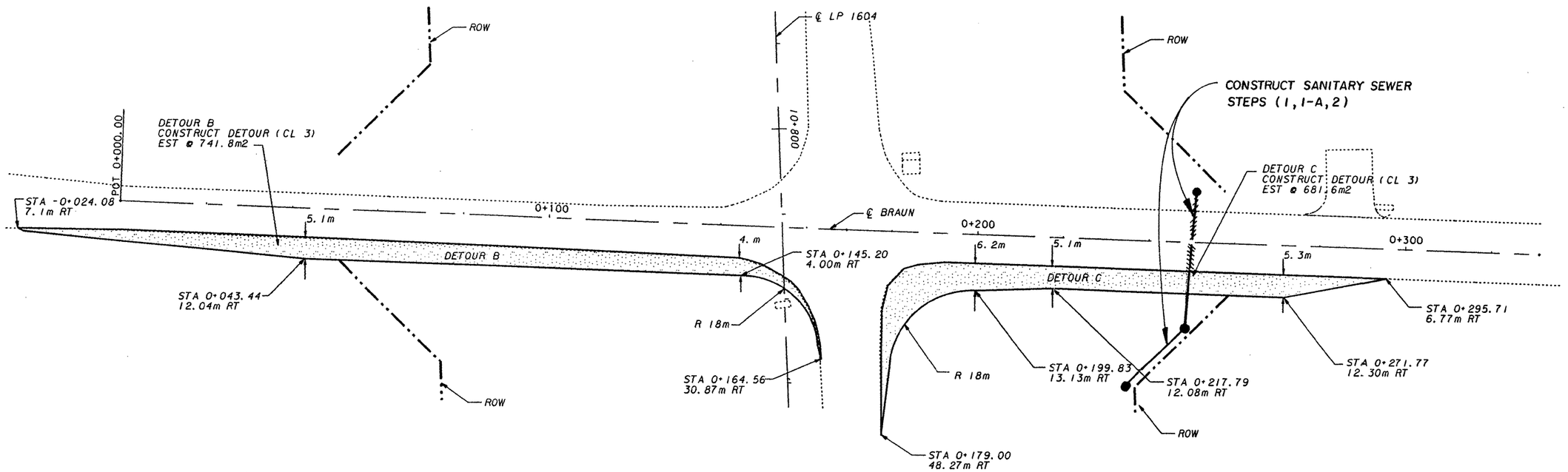

NOTES:

1. THE CONTRACTOR SHALL USE TEMPORARY LANE CLOSURE DETAIL TCP(2-1) FOR REMOVAL/CONSTRUCTION.
2. THE CONTRACTOR SHALL UTILIZE EXISTING PAVEMENT MARKINGS UNLESS OTHERWISE NOTED.
3. CONTRACTOR SHALL UTILIZE FLAGGER CONTROL AND APPROPIATE ADVANCE SIGNING WHEN TIEING INTO EXISTING PAVEMENT WITH TEMPORARY PAVEMENT.
4. ALL DRUMS, BARRICADES, WARNING LIGHTS, AND CONSTRUCTION SIGNING ARE TO BE PROVIDED BY THE CONTRACTOR AND ARE SUBSIDIARY TO ITEM 502.
5. THE CONTRACTOR SHALL USE BLACK BASE ON ALL DETOURS AND AT BRAUN ROAD, NEW GUILBEAU, BOWENS CROSSING, AND SHAENFIELD INTERSECTIONS. SEE INTERSECTION LAYOUTS FOR LIMITS OF BLACK BASE. ASPHALT SHALL BE PLACED BETWEEN BLACK BASE AND TOP OF EXISTING PAVEMENT AT 3:1 SLOPE. ASPHALT SLOPE SHALL BE USED BETWEEN PLACEMENT OF EACH LIFT OF BLACK BASE IF BOTH LIFTS CANNOT BE COMPLETED IN ONE (1) DAY. SLOPE SHALL BE REMOVED PRIOR TO PLACEMENT OF SECOND LIFT.

STATE OF TEXAS
BRENT L. CHRISTIAN
73921
REGISTERED PROFESSIONAL ENGINEER

Brent L. Christian
5/5/97

NO.	DATE	REVISION	APPROV.

Texas Department of Transportation
LOOP 1604

SEQUENCE OF WORK
BRAUN ROAD
PHASE 1 - STEP 1

SHEET 1 OF 5

Kimley-Horn and Associates, Inc.

Designed	REK	DIST	FED REG	FEDERAL AID PROJECT				HIGHWAY
Checked	BLC	15	6					LP1604
Drawn	REK	COUNTY		CONTROL	SECT	JOB		SHEET
Checked	BLC	BEXAR		2452	01	035		98

LEGEND

- CONCRETE TRAFFIC BARRIER (CTB)
- VIA (SFPM)
- CONSTRUCTION SIGN
- TRAFFIC FLOW DIRECTION
- DRAINAGE CONSTRUCTION
- (X) SEE SCHEDULE OF BARRICADES
- TO BE REMOVED
- DETOUR
- NEW ROADWAY PAVEMENT
- DRUMS WITH TYPE C WARNING LIGHTS

SECTION A-A
(N. T. S.)

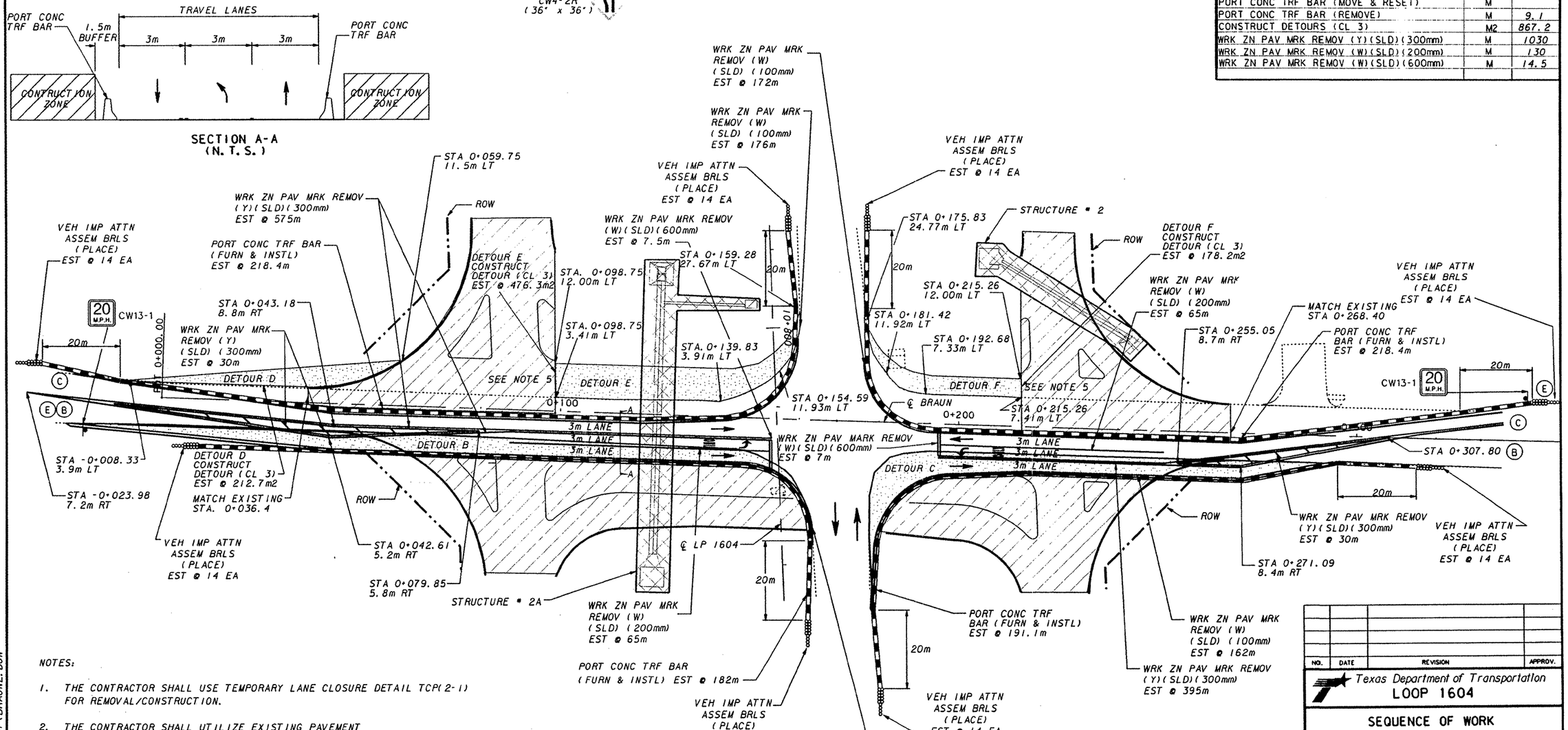

ESTIMATED QUANTITIES

ITEM	UNIT	QTY
WRK ZN PAV MRK REMOV (W)(SLD)(100mm)	M	705
WRK ZN PAV MRK REMOV (W)(BRK)(100mm)	M	
WRK ZN PAV MRK REMOV (Y)(SLD)(100mm)	M	
WRK ZN PAV MRK NON-REMV (W)(SLD)(100mm)	M	
WRK ZN PAV MRK NON-REMV (W)(BRK)(100mm)	M	
WRK ZN PAV MRK NON-REMV (Y)(SLD)(100mm)	M	
ELIM EXT PAV MRK & MRKR (100mm)	M	
VEH IMP ATTN ASSEM BRLS (PLACE)	EA	112
VEH IMP ATTN ASSEM BRLS (MOVE & RESET)	EA	
VEH IMP ATTN ASSEM BRLS (REMOVE)	EA	56
RAIS PAV MRKR CL B (REFL) TY II-C-R	EA	
PORT CONC TRF BAR (FURN & INSTL)	M	809.9
PORT CONC TRF BAR (MOVE & RESET)	M	
PORT CONC TRF BAR (REMOVE)	M	9.1
CONSTRUCT DETOURS (CL 3)	M2	867.2
WRK ZN PAV MRK REMOV (Y)(SLD)(300mm)	M	1030
WRK ZN PAV MRK REMOV (W)(SLD)(200mm)	M	130
WRK ZN PAV MRK REMOV (W)(SLD)(600mm)	M	14.5

NOTES:

1. THE CONTRACTOR SHALL USE TEMPORARY LANE CLOSURE DETAIL TCP(2-1) FOR REMOVAL/CONSTRUCTION.
2. THE CONTRACTOR SHALL UTILIZE EXISTING PAVEMENT MARKINGS UNLESS OTHERWISE NOTED.
3. CONTRACTOR SHALL UTILIZE FLAGGER CONTROL AND APPROPIATE ADVANCE SIGNING WHEN TIEING INTO EXISTING PAVEMENT WITH TEMPORARY PAVEMENT.
4. ALL DRUMS, BARRICADES, WARNING LIGHTS, AND CONSTRUCTION SIGNING ARE TO BE PROVIDED BY THE CONTRACTOR AND ARE SUBSIDIARY TO ITEM 502.
5. USE ASPHALT LEVEL COURSE AT A 1:3 SLOPE TO MATCH FRONTAGE ROAD WITH BRAUN ROAD.
6. SEE SHEET 82 FOR TEMPORARY SIGNAL LAYOUT AT THE BRAUN ROAD AND EXISTING LP 1604 INTERSECTION.

H:\DRAWINGS\673160 3\TCP\BRAUN2.DGN

NO.	DATE	REVISION	APPROV.

Texas Department of Transportation
LOOP 1604

SEQUENCE OF WORK
BRAUN ROAD
PHASE 1 - STEP 2

SHEET 2 OF 5

Kimley-Horn and Associates, Inc.

STATE OF TEXAS — BRENT L. CHRISTIAN 73921 — REGISTERED PROFESSIONAL ENGINEER

Brent L. Christian
5/5/97

Designed	REK	DIST	FED REG	FEDERAL AID PROJECT #				HIGHWAY
Checked	BLC	15	6					LP1604
Drawn	REK	COUNTY			CONTROL	SECT	JOB	SHEET
Checked	BLC	BEXAR			2452	01	035	99

LEGEND

- CONCRETE TRAFFIC BARRIER (CTB)
- VIA (SFPM)
- CONSTRUCTION SIGN
- TRAFFIC FLOW DIRECTION
- DRAINAGE CONSTRUCTION
- (X) SEE SCHEDULE OF BARRICADES
- TO BE REMOVED
- DETOUR
- NEW ROADWAY PAVEMENT
- DRUMS WITH TYPE C WARNING LIGHTS

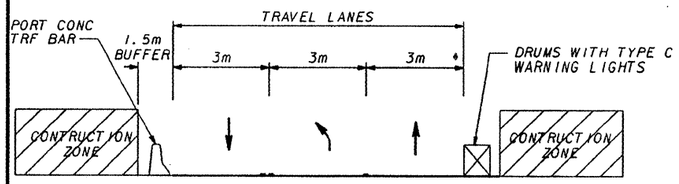

SECTION A-A
(N. T. S.)

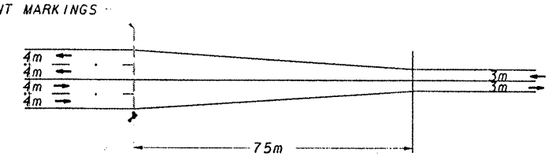

CW13-1 (18" x 18") 20 M.P.H.

CW4-2R (36" x 36")

BRAUN ROAD WESTBOUND APPROACH TRANSITION

SCALE: 1:1000

ESTIMATED QUANTITIES		
ITEM	UNIT	QTY
WRK ZN PAV MRK REMOV (W)(SLD)(100mm)	M	993.4
WRK ZN PAV MRK REMOV (W)(BRK)(100mm)	M	
WRK ZN PAV MRK REMOV (Y)(SLD)(100mm)	M	
WRK ZN PAV MRK NON-REMV (W)(SLD)(100mm)	M	
WRK ZN PAV MRK NON-REMV (W)(BRK)(100mm)	M	
WRK ZN PAV MRK NON-REMV (Y)(SLD)(100mm)	M	
ELIM EXT PAV MRK & MRKR (100mm)	M	
VEH IMP ATTN ASSEM BRLS (PLACE)	EA	
VEH IMP ATTN ASSEM BRLS (MOVE & RESET)	EA	56
VEH IMP ATTN ASSEM BRLS (REMOVE)	EA	56
RAIS PAV MRKR CL B (REFL) TY II-C-R	EA	
PORT CONC TRF BAR (FURN & INSTL)	M	
PORT CONC TRF BAR (MOVE & RESET)	M	673.4
PORT CONC TRF BAR (REMOVE)	M	673.4
CONSTRUCT DETOURS (CL 3)	M2	
WRK ZN PAV MRK REMOV (Y)(SLD)(300mm)	M	1253
WRK ZN PAV MRK REMOV (W)(SLD)(200mm)	M	138
WRK ZN PAV MRK REMOV (W)(SLD)(600mm)	M	15

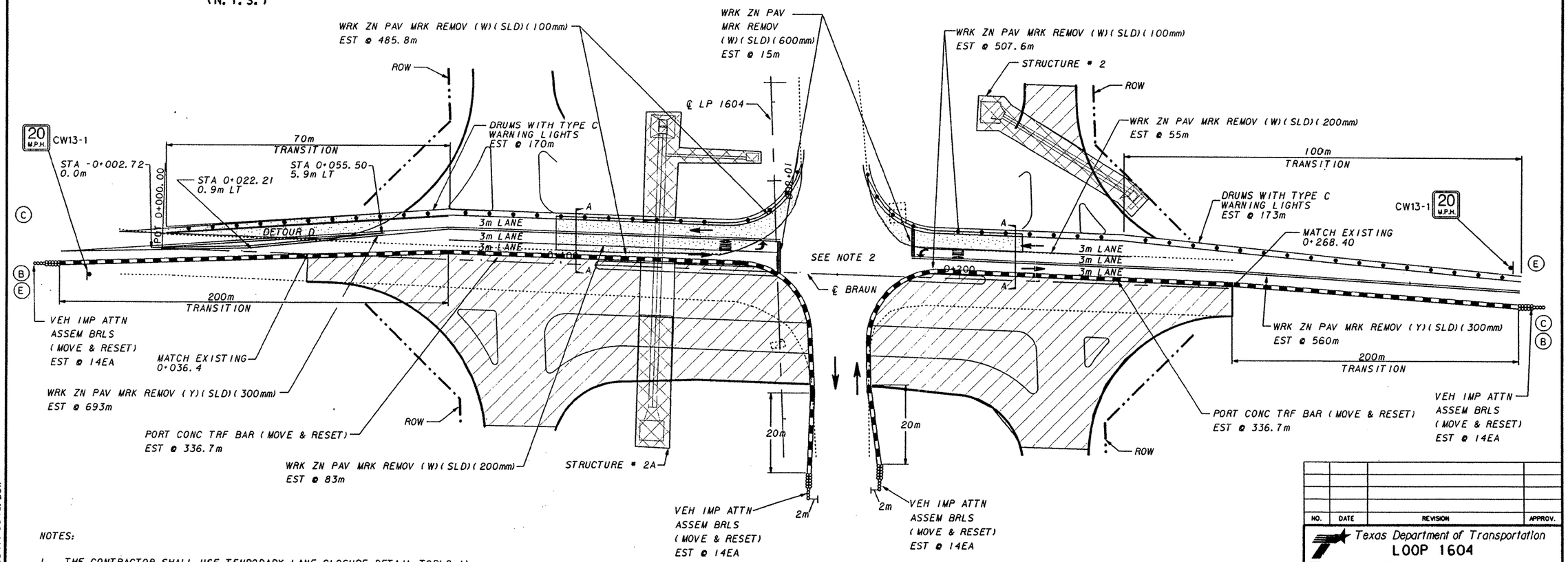

NOTES:

1. THE CONTRACTOR SHALL USE TEMPORARY LANE CLOSURE DETAIL TCP(2-1) FOR REMOVAL/CONSTRUCTION.
2. THE CONTRACTOR SHALL UTILIZE EXISTING PAVEMENT MARKINGS UNLESS OTHERWISE NOTED.
3. CONTRACTOR SHALL UTILIZE FLAGGER CONTROL AND APPROPIATE ADVANCE SIGNING WHEN TIEING INTO EXISTING PAVEMENT WITH TEMPORARY PAVEMENT.
4. ALL DRUMS, BARRICADES, WARNING LIGHTS, AND CONSTRUCTION SIGNING ARE TO BE PROVIDED BY THE CONTRACTOR AND ARE SUBSIDIARY TO ITEM 502.
5. SEE SHEET 82 FOR TEMPORARY SIGNAL LAYOUT AT THE BRAUN ROAD AND EXISTING LP 1604 INTERSECTION.

LEVELS DISPLAYED																
1	2	3	4	5	6	7	8	9	10	11	12	13	14	15	16	
17	18	19	20	21	22	23	24	25	26	27	28	29	30	31	32	
33	34	35	36	37	38	39	40	41	42	43	44	45	46	47	48	
49	50	51	52	53	54	55		57		59	60	61	62	63		

H:\DRAWINGS\67316O3\TCP\604TPC04a.DGN

NO.	DATE	REVISION	APPROV.

Texas Department of Transportation
LOOP 1604

SEQUENCE OF WORK
BRAUN ROAD
PHASE 1 - STEP 3

SHEET 3 OF 5

STATE OF TEXAS — BRENT L. CHRISTIAN 73921 — REGISTERED PROFESSIONAL ENGINEER

Brent L. Christian
5/5/97

Kimley-Horn and Associates, Inc.

Designed	REK	DIST	FED REG	FEDERAL AID PROJECT			HIGHWAY
Checked	BLC	15	6				LP1604
Drawn	REK	COUNTY		CONTROL	SECT	JOB	SHEET
Checked	BLC	BEXAR		2452	01	035	100

LEGEND

- CONCRETE TRAFFIC BARRIER (CTB)
- VIA (SFPM)
- CONSTRUCTION SIGN
- TRAFFIC FLOW DIRECTION
- DRAINAGE CONSTRUCTION
- (X) SEE SCHEDULE OF BARRICADES
- TO BE REMOVED
- DETOUR
- NEW ROADWAY PAVEMENT
- DRUMS WITH TYPE C WARNING LIGHTS

SCALE: 1:1000

ESTIMATED QUANTITIES

ITEM	UNIT	QTY
WRK ZN PAV MRK REMOV (W)(SLD)(100mm)	M	
WRK ZN PAV MRK REMOV (W)(BRK)(100mm)	M	
WRK ZN PAV MRK REMOV (Y)(SLD)(100mm)	M	
WRK ZN PAV MRK NON-REMV (W)(SLD)(100mm)	M	
WRK ZN PAV MRK NON-REMV (W)(BRK)(100mm)	M	
WRK ZN PAV MRK NON-REMV (Y)(SLD)(100mm)	M	
ELIM EXT PAV MRK & MRKR (100mm)	M	
VEH IMP ATTN ASSEM BRLS (PLACE)	EA	
VEH IMP ATTN ASSEM BRLS (MOVE & RESET)	EA	
VEH IMP ATTN ASSEM BRLS (REMOVE)	EA	
RAIS PAV MRKR CL B (REFL) TY II-C-R	EA	
PORT CONC TRF BAR (FURN & INSTL)	M	
PORT CONC TRF BAR (MOVE & RESET)	M	
PORT CONC TRF BAR (REMOVE)	M	
CONSTRUCT DETOURS (CL 3)	M2	

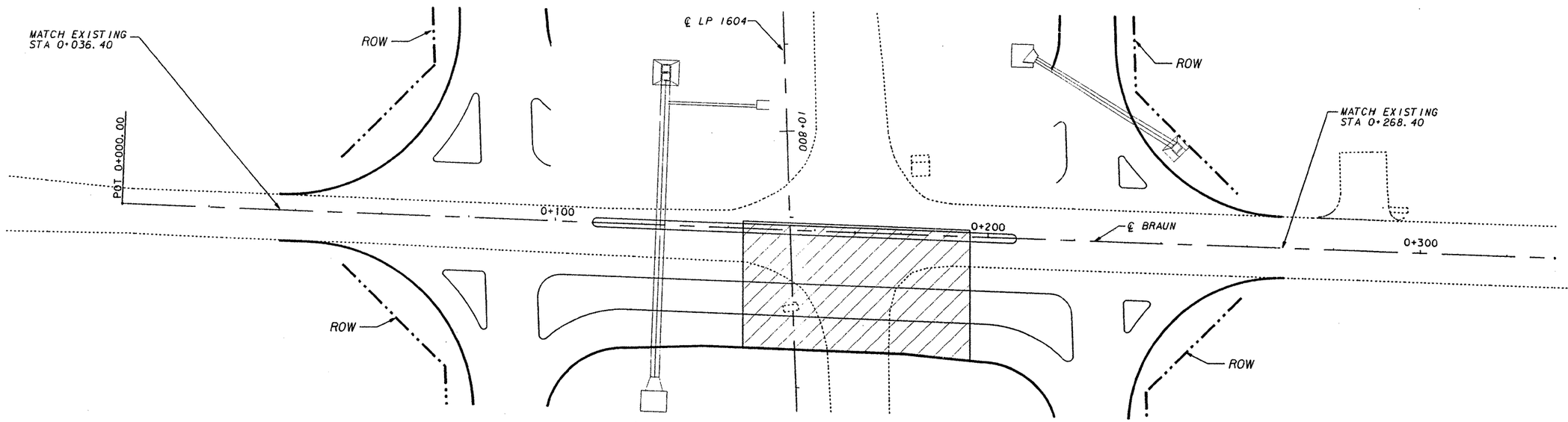

NOTES:

1. THE CONTRACTOR SHALL USE TEMPORARY LANE CLOSURE DETAIL TCP(2-1) FOR REMOVAL/CONSTRUCTION.
2. THE CONTRACTOR SHALL UTILIZE EXISTING PAVEMENT MARKINGS UNLESS OTHERWISE NOTED.
3. CONTRACTOR SHALL UTILIZE FLAGGER CONTROL AND APPROPIATE ADVANCE SIGNING WHEN TIEING INTO EXISTING PAVEMENT WITH TEMPORARY PAVEMENT.
4. ALL DRUMS, BARRICADES, WARNING LIGHTS, AND CONSTRUCTION SIGNING ARE TO BE PROVIDED BY THE CONTRACTOR AND ARE SUBSIDIARY TO ITEM 502.

STATE OF TEXAS
BRENT L. CHRISTIAN
73921
REGISTERED
PROFESSIONAL ENGINEER

Brent L. Christian
5/5/97

NO.	DATE	REVISION	APPROV.

Texas Department of Transportation
LOOP 1604

SEQUENCE OF WORK
BRAUN ROAD
PHASE 2 - STEP 1

SHEET 4 OF 5

Kimley-Horn and Associates, Inc.

Designed	REK	DIST	FED REG	FEDERAL AID PROJECT				HIGHWAY
Checked	BLC	15	6					LP1604
Drawn	REK	COUNTY		CONTROL	SECT	JOB		SHEET
Checked	BLC	BEXAR		2452	01	035		101

LEGEND

- CONCRETE TRAFFIC BARRIER (CTB)
- VIA (SFPM)
- CONSTRUCTION SIGN
- TRAFFIC FLOW DIRECTION
- DRAINAGE CONSTRUCTION
- (X) SEE SCHEDULE OF BARRICADES
- TO BE REMOVED
- DETOUR
- NEW ROADWAY PAVEMENT
- DRUMS WITH TYPE C WARNING LIGHTS

ESTIMATED QUANTITIES

ITEM	UNIT	QTY
WRK ZN PAV MRK REMOV (W)(SLD)(100mm)	M	365
WRK ZN PAV MRK REMOV (W)(BRK)(100mm)	M	
WRK ZN PAV MRK REMOV (Y)(SLD)(100mm)	M	
WRK ZN PAV MRK NON-REMV (W)(SLD)(100mm)	M	
WRK ZN PAV MRK NON-REMV (W)(BRK)(100mm)	M	
WRK ZN PAV MRK NON-REMV (Y)(SLD)(100mm)	M	
ELIM EXT PAV MRK & MRKR (100mm)	M	
VEH IMP ATTN ASSEM BRLS (PLACE)	EA	
VEH IMP ATTN ASSEM BRLS (MOVE & RESET)	EA	
VEH IMP ATTN ASSEM BRLS (REMOVE)	EA	
RAIS PAV MRKR CL B (REFL) TY II-C-R	EA	
PORT CONC TRF BAR (FURN & INSTL)	M	
PORT CONC TRF BAR (MOVE & RESET)	M	
PORT CONC TRF BAR (REMOVE)	M	
CONSTRUCT DETOURS (CL 3)	M2	
WRK ZN PAV MRK REMOV (W)(SLD)(600mm)	M	20.5
WRK ZN PAV MRK REMOV (W)(SLD)(200mm)	M	54
WRK ZN PAV MRK REMOV (Y)(SLD)(300mm)	M	349

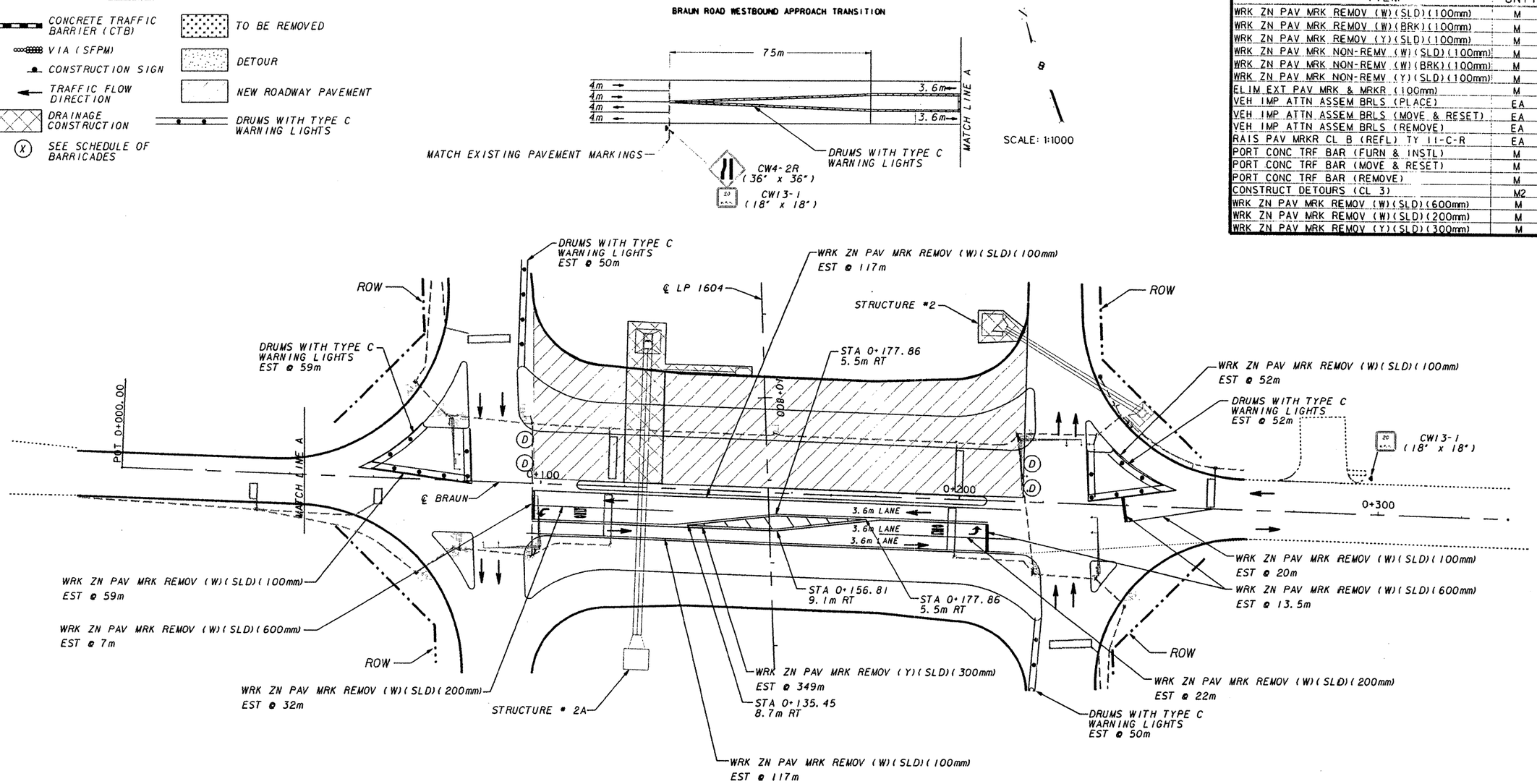

NOTES:

1. THE CONTRACTOR SHALL USE TEMPORARY LANE CLOSURE DETAIL TCP(2-1) FOR REMOVAL/CONSTRUCTION.
2. THE CONTRACTOR SHALL UTILIZE EXISTING PAVEMENT MARKINGS UNLESS OTHERWISE NOTED.
3. CONTRACTOR SHALL UTILIZE FLAGGER CONTROL AND APPROPIATE ADVANCE SIGNING WHEN TIEING INTO EXISTING PAVEMENT WITH TEMPORARY PAVEMENT.
4. ALL DRUMS, BARRICADES, WARNING LIGHTS, AND CONSTRUCTION SIGNING ARE TO BE PROVIDED BY THE CONTRACTOR AND ARE SUBSIDIARY TO ITEM 502.

STATE OF TEXAS
BRENT L. CHRISTIAN
73921
REGISTERED PROFESSIONAL ENGINEER

Brent L. Christian
5/5/97

NO.	DATE	REVISION	APPROV.

Texas Department of Transportation
LOOP 1604

SEQUENCE OF WORK
BRAUN ROAD
PHASE 2 - STEP 2

SHEET 5 OF 5

Kimley-Horn and Associates, Inc.

Designed	REK	DIST	FED REG	FEDERAL AID PROJECT #				HIGHWAY
Checked	BLC	15	6					LP1604
Drawn	REK	COUNTY		CONTROL	SECT	JOB		SHEET
Checked	BLC	BEXAR		2452	01	035		102

SITE CONDITIONS AND PLACEMENT GUIDELINES

CONDITION	RECOMMENDATIONS	ILLUSTRATION
1. Angle of array in relation to center line of obstacle	Not recommended for more than 10°	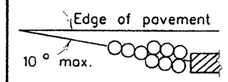
2. Bi-directional traffic	Offset array to avoid rear corner module snagging potential by traffic in the upstream direction of flow	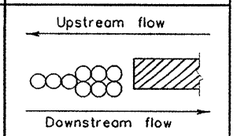
3. Module spacing : Module to Module Module to fixed object	150mm usual 355 mm	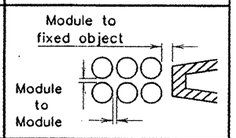
4. Coffin corner	Shield 760 mm outside of fixed object	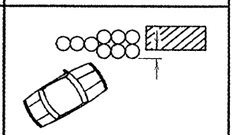
5. Sloping sites (lateral and longitudinal) (See Gen. Note 6)	1:10 Maximum (V:H)	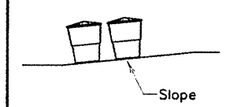
6. Curbs and raised islands (See Gen. Note 4)	No more than 100mm high (remove if possible)	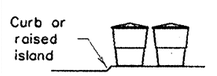
7. Foundation pads (See Gen. Note 7)	Flat surface; concrete or asphalt	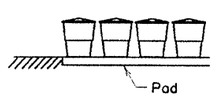
8. Maintenance	Keep site clear of debris and snow	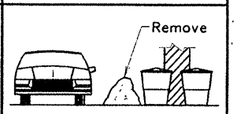
9. Sand densities	1600 kg/cubic meter	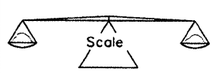
10. Vandalism, impact and or maintenance	Check periodically for damages	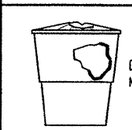

TYPICAL MODULE ARRAYS WITH CORRESPONDING DESIGN SPEED AND SAND WEIGHT (kg) shown in circles.

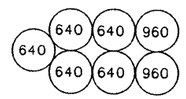

50 km/h

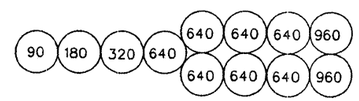

80 km/h

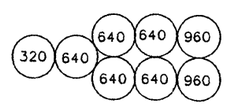

60 km/h

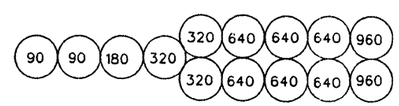

90 km/h

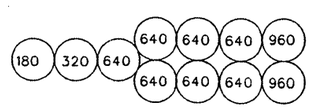

70 km/h

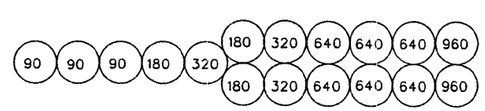

100 km/h

GENERAL NOTES

1. Rear modules should overlap (in width) the fixed object on each side by a minimum of 760 . mm
2. Modification of array When proximity of traffic lanes exclude the use of a wider barrier. The front of the barrier may retain the standard width but the rear can be widened by spacing as shown in this diagram.

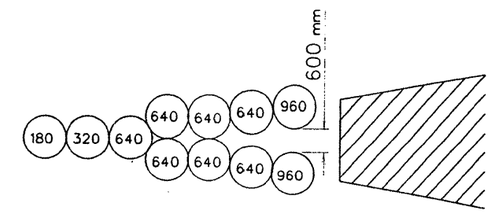

3. Barrier can be placed at any distance from the shoulder both at roadside and in median sites from 0 to 9 meters depending on the location of the fixed object. Angling of the barrier toward oncoming traffic is suggested from 3 to 10 degres depending on space available.
4. Whenever possible curbs 100mm and higher should be removed from installation area. However, when removal is not possible, modules can be separated along the barrier axis to fit the situation.
5. Longitudinal spacing of modules may be increased where space permits for example 600mm , or even 900mm spacing of some of the modules may permit the design Engineer to exploit all the space allocated for an energy-absorbing barrier.
6. The entire area of the crash cushion installation and approaches shall be graded so that the maximum slope does not exceed 1:10 (vertical:horizontal) in any direction.
7. Where required, support pads will be measured and paid for in accordance with pertinent bid items.

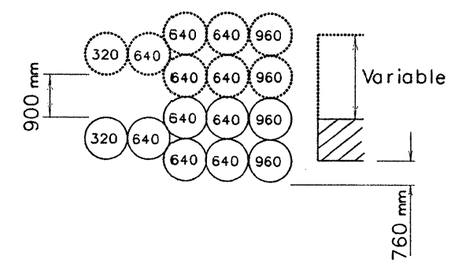

BARRIER ARRAYS FOR FIXED OBJECT OF VARIABLE WIDTH (60 km/h)

DESIGN GUIDELINES AND TYPICAL MODULE ARRAYS

VEHICLE IMPACT ATTENUATOR (SAND FILLED PLASTIC MODULES)

VIA(SFPM)(M)

SHEET 103

DISCLAIMER
The use of these guidelines are governed by the Texas Engineering Practice Act. No warranty of any kind is made by TxDOT for any purpose whatsoever. TxDOT assumes no responsibility for the conversion of these guidelines to other formats or for incorrect results or damages resulting from its use.

LEVELS DISPLAYED
1 2 3 4 5 6 7 8 9 10 11 12 13 14 15 16
17 18 19 20 21 22 23 24 25 26 27 28 29 30 31 32
33 34 35 36 37 38 39 40 41 42 43 44 45 46 47 48
49 50 51 52 53 54 55 56 57 58 59 60 61 62 63

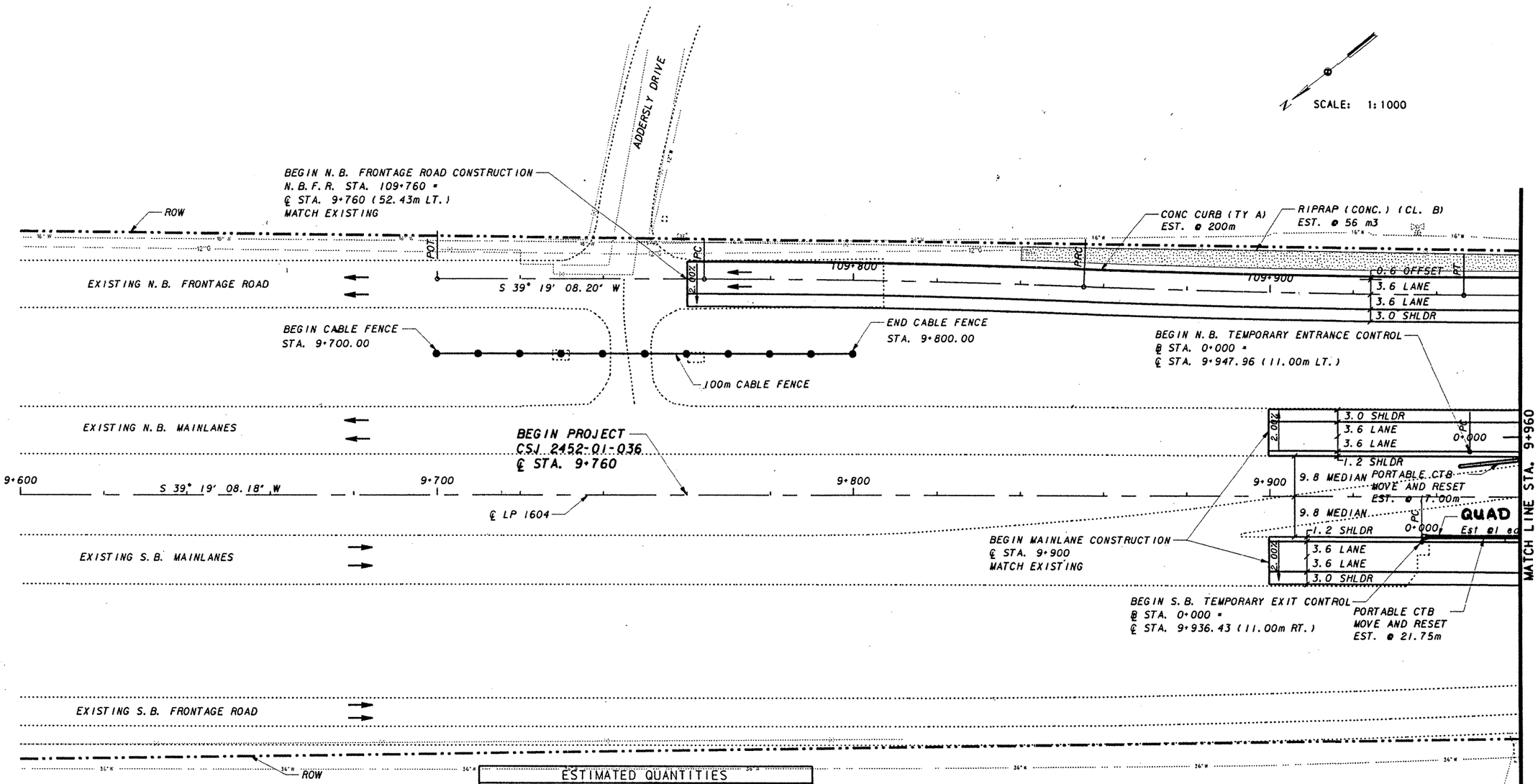

NOTES:

FOR HORIZONTAL GEOMETRY SEE SHEETS 17-25.
FOR REMOVAL ITEMS SEE SHEET 26.
FOR RIPRAP DETAILS SEE SHEET 145.
ALL DIMENSIONS ARE IN METERS UNLESS OTHERWISE NOTED.

UTILITY LEGEND:

- 16"W — WATER
- Tel — TELEPHONE
- UG Tel — UNDERGROUND TELEPHONE
- 6"G — GAS LINE
- OH 1 PHASE ELEC
- OH 2 PHASE ELEC
- OH 3 PHASE ELEC
- SS — SANITARY SEWER

ESTIMATED QUANTITIES

ITEM	UNIT	QTY.
PREP ROW	KM	0.2
EXCAVATION (RDWY)	M3	22787
EMBANK (ORD COMP)(TY B)(CL 3)	M3	76
FURN & PLAC TPSL(CL 2)(150 MM)	M2	10991
DRILL SEED (PERM)(URBAN)(CLAY)	M2	10991
FLEX BASE (COMPL IN PLAC) (TY A GR 6)(CL 4)	M3	1431
*ASPH MATRL (AE-P)	M2	3720
*ONE CRSE SURF TREAT	M2	3720
*HMA (TY C)	M2	3624
*HMA (TY C) (SURF)	M2	3528
REPAIR EXIST FLEX PAV STRUCT(200MM)	M2	-
CONC MEDIAN	M2	-
DRVWAYS (ASPH-CONC PAV)(TY 1)	M2	-
RIPRAP (CONC) (CL. B)	M3	56
CONC CURB (TY A)	M	200
QUAD. SYS. (760mm) 10 BAY(TY B)	EA	1
PORT CONC TRF BAR(MOVE & RESET)	M	38.75
ANTI GRAFFITI COATING(CLEAR)(TY 11)	M2	461
TERM ANCHOR SECT (2.67MM)	EA	-
POST - CABLE FENCE	M	100

* FOR CONTRACTOR'S INFORMATION ONLY

STATE OF TEXAS
J. KEVIN KENNEDY
72984
REGISTERED PROFESSIONAL ENGINEER
J. Kevin Kennedy
5-2-97

NO.	DATE	REVISION	APPROV.

Texas Department of Transportation
LOOP 1604

PLAN SHEET
BEGIN PROJECT TO STA. 9+960

SHEET 1 OF 14

Kimley-Horn and Associates, Inc.

Designed	LMW	DIST	FED REG	FEDERAL AID PROJECT					HIGHWAY
Checked	BHS	15	6	CD 2452-01-035					LP1604
Drawn	NWA	COUNTY			CONTROL	SECT	JOB		SHEET
Checked	JKK	BEXAR			2452	01	035		104

FILENAME: g:\67316-03\604rp01.dgn PLOTTED: 02 MAY 97 12:57:39

LEVELS DISPLAYED

1	2	3	4	6	7	8	9	10	11	12	13	14	15	16			
17	18	19	20	21	22	23	24	25	26	27	28	29	30	31	32		
33	34	35	36	37	38	39	40	41	42	43	44	45	46	47	48		
49		51	52	53	54	55	56	57	58	59	60	61	62	63			

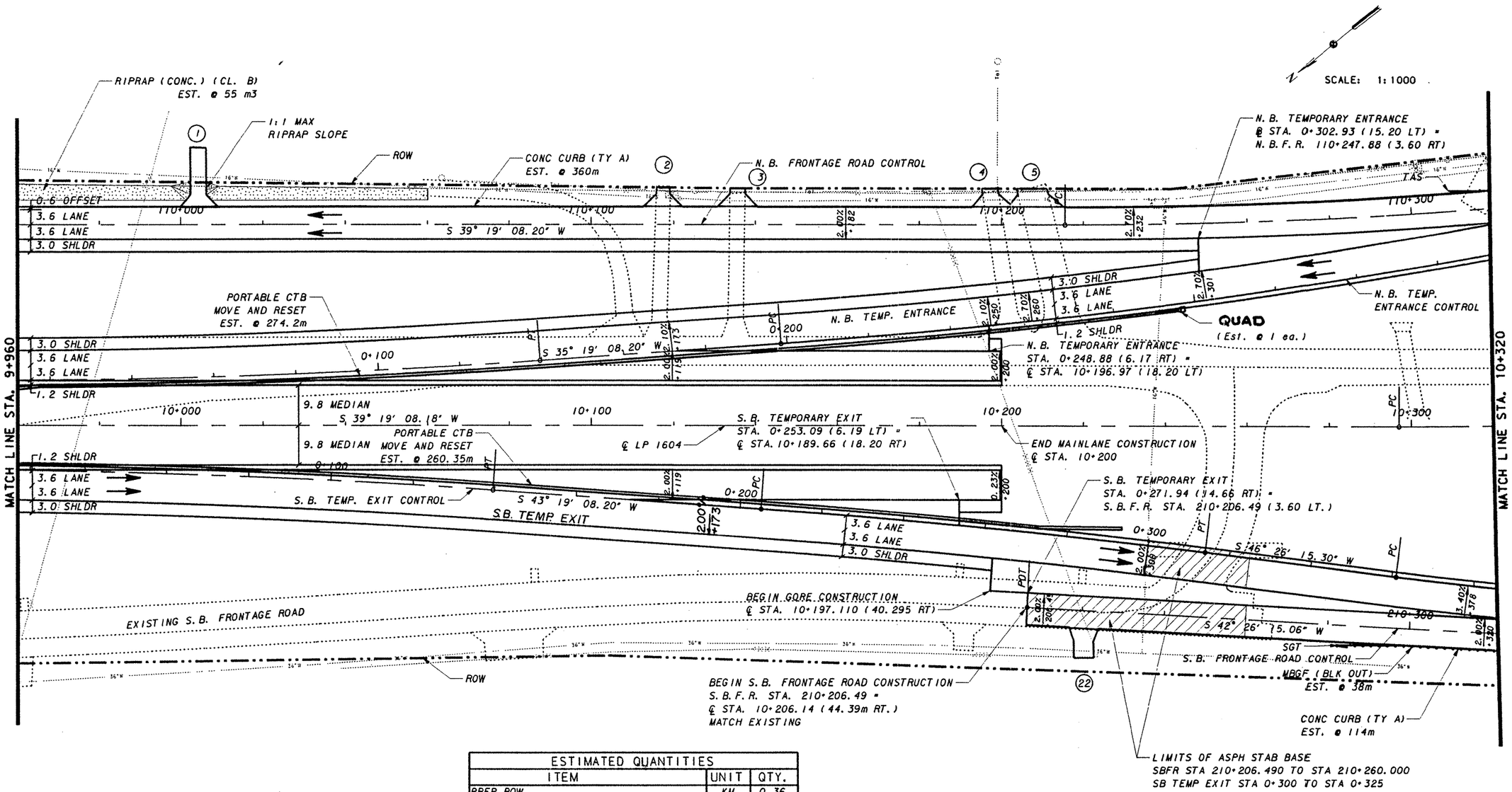

NOTES:

FOR HORIZONTAL GEOMETRY SEE SHEETS 17-25 .
FOR REMOVAL ITEMS SEE SHEETS 27.
FOR DRIVEWAY DETAILS SEE SHEETS 60.
FOR RIPRAP DETAILS SEE SHEETS 145.
ALL DIMENSIONS ARE IN METERS UNLESS OTHERWISE NOTED.

UTILITY LEGEND:

- 16"W — WATER
- Tel — TELEPHONE
- UG Tel — UNDERGROUND TELEPHONE
- 6"G — GAS LINE
- OH 1 PHASE ELEC
- OH 2 PHASE ELEC
- OH 3 PHASE ELEC
- SS — SANITARY SEWER

ESTIMATED QUANTITIES

	ITEM	UNIT	QTY.
	PREP ROW	KM	0.36
	EXCAVATION (RDWY)	M3	20327
	EMBANK (ORD COMP)(TY B)(CL 3)	M3	7318
	FURN & PLAC TPSL(CL 2)(150 MM)	M2	22086
	DRILL SEED (PERM)(URBAN)(CLAY)	M2	22086
	FLEX BASE (COMPL IN PLAC) (TY A GR 6)(CL 4)	M3	5864
	*ASPH MATRL (AE-P)	M2	16195
	*ONE CRSE SURF TREAT	M2	16195
	*HMA (TY C)	M2	15933
	*HMA (TY C) (SURF)	M2	15724
	RIPRAP (CONC)(CL B)	M3	55
	QUAD. SYS. (760mm) 10 BAY(TY B)	EA	1
	DRVWAYS (ASPH-CONC PAV)(TY 1)	M2	221
*	ASPH STAB BASE (GR 4) (200 MM)	M2	850
	CONC CURB (TY A)	M	474
	SINGLE GDRAIL TERM	EA	1
	WTL BEAM GD FEN (TIM POST)(BLK OUT)	M	38
	PORT CONC TRF BAR (MOVE & RESET)	M	534.55
	TERM ANCHOR SECT (2.67MM)	EA	1
	ANTI GRAFFITI COATING(CLEAR)(TY 11)	M2	470

* FOR CONTRACTOR'S INFORMATION ONLY

STATE OF TEXAS
J. KEVIN KENNEDY
72984
REGISTERED
PROFESSIONAL ENGINEER
J. Kevin Kennedy
5-2-97

NO.	DATE	REVISION	APPROV.

Texas Department of Transportation
LOOP 1604

PLAN SHEET
STA. 9+960 TO STA. 10+320

SHEET 2 OF 14

Kimley-Horn and Associates, Inc.

Designed	LMW	DIST	FED REG	FEDERAL AID PROJECT				HIGHWAY
Checked	BHS	15	6	CD 2452-01-035				LP1604
Drawn	KWA	COUNTY		CONTROL	SECT	JOB	SHEET	
Checked	JKK	BEXAR		2452	01	035	105	

LEVELS DISPLAYED

1	2	3	4	5	6	7	8	9	10	11	12	13	14	15	16	
17	18	19	20	21	22	23	24	25	26	27	28	29	30	31	32	
33	34	35	36	37	38	39	40	41	42	43	44	45	46	47	48	
49		51	52	53	54	55	56	57	58	59	60	61	62	63		

FILENAME: g:\67316-03\604rpp02.dgn PLOTTED: 02 MAY 97 13:11:56

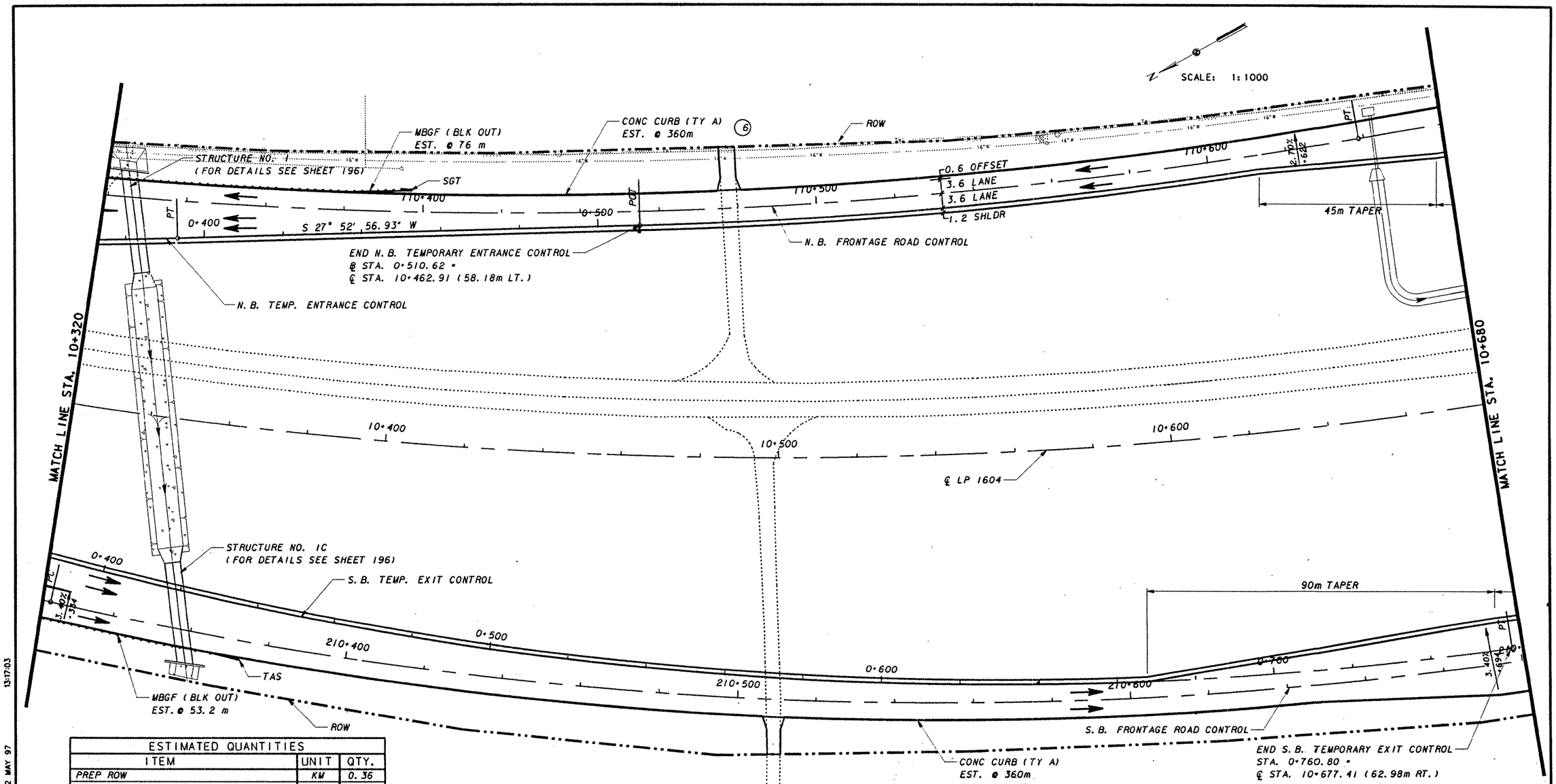

ESTIMATED QUANTITIES		
ITEM	UNIT	QTY.
PREP ROW	KM	0.36
EXCAVATION (RDWY)	M3	12454
EMBANK (ORD COMP)(TY B)(CL 3)	M3	5868
FURN & PLAC TPSL(CL 2)(150 MM)	M2	45815
DRILL SEED (PERM)(URBAN)(CLAY)	M2	45815
FLEX BASE (COMPL IN PLAC) (TY A GR 6)(CL 4)	M3	3454
*ASPH MATRL (AE-P)	M2	8993
*ONE CRSE SURF TREAT	M2	8993
*HMA (TY C)	M2	8777
*HMA (TY C) (SURF)	M2	8561
REPAIR EXIST FLEX PAV STRUCT(200MM)	M2	-
CONC MEDIAN	M2	-
DRVWAYS (ASPH-CONC PAV)(TY 1)	M2	84
DRVWAYS (CONC)(TY 1)	M2	-
CONC CURB (TY A)	M	720
SINGLE GDRAIL TERM	EA	1
MTL BEAM GD FEN (TIM POST)(2.67MM)	M	-
MTL BEAM GD FEN (TIM POST)(BLK OUT)	M	129.2
TERM ANCHOR SECT (2.67MM)	EA	1
POST - CABLE FENCE	M	-
* FOR CONTRACTOR'S INFORMATION ONLY		

NOTES:

FOR HORIZONTAL GEOMETRY SEE SHEETS 17-25.
FOR REMOVAL ITEMS SEE SHEETS 28.
FOR DRIVEWAY DETAILS SEE SHEETS 60.
ALL DIMENSIONS ARE IN METERS UNLESS OTHERWISE NOTED.

UTILITY LEGEND:

- 16"W — WATER
- Tel — TELEPHONE
- UG Tel — UNDERGROUND TELEPHONE
- 6"G — GAS LINE
- OH 1 PHASE ELEC
- OH 2 PHASE ELEC
- OH 3 PHASE ELEC
- SS — SANITARY SEWER

NO.	DATE	REVISION	APPROV.

Texas Department of Transportation
LOOP 1604

PLAN SHEET
STA. 10+320 TO STA. 10+680

SHEET 3 OF 14

Kimley-Horn and Associates, Inc.

STATE OF TEXAS
J. KEVIN KENNEDY
72984
REGISTERED PROFESSIONAL ENGINEER

J. Kevin Kennedy
5-2-97

Designed	LMW	DIST	FED REG	FEDERAL AID PROJECT #	HIGHWAY
Checked	BHS	15	6	CD 2452-01-035	LP1604
Drawn	KWA	COUNTY		CONTROL SECT JOB	SHEET
Checked	JKK	BEXAR		2452 01 035	106

FILENAME: g:\67316-03\604rpp03.dgn PLOTTED: 02 MAY 97 13:17:03

LEVELS DISPLAYED

1	2	3	4	16	7	8	9	10	11	12	13	14	15	16	
17	18	19	20	21	22	23	24	25	26	27	28	29	30	31	32
33	34	35	36	37	38	39	40	41	42	43	44	45	46	47	48
49	50	51	52	53	54	55	56	57	58	59	60	61	62	63	

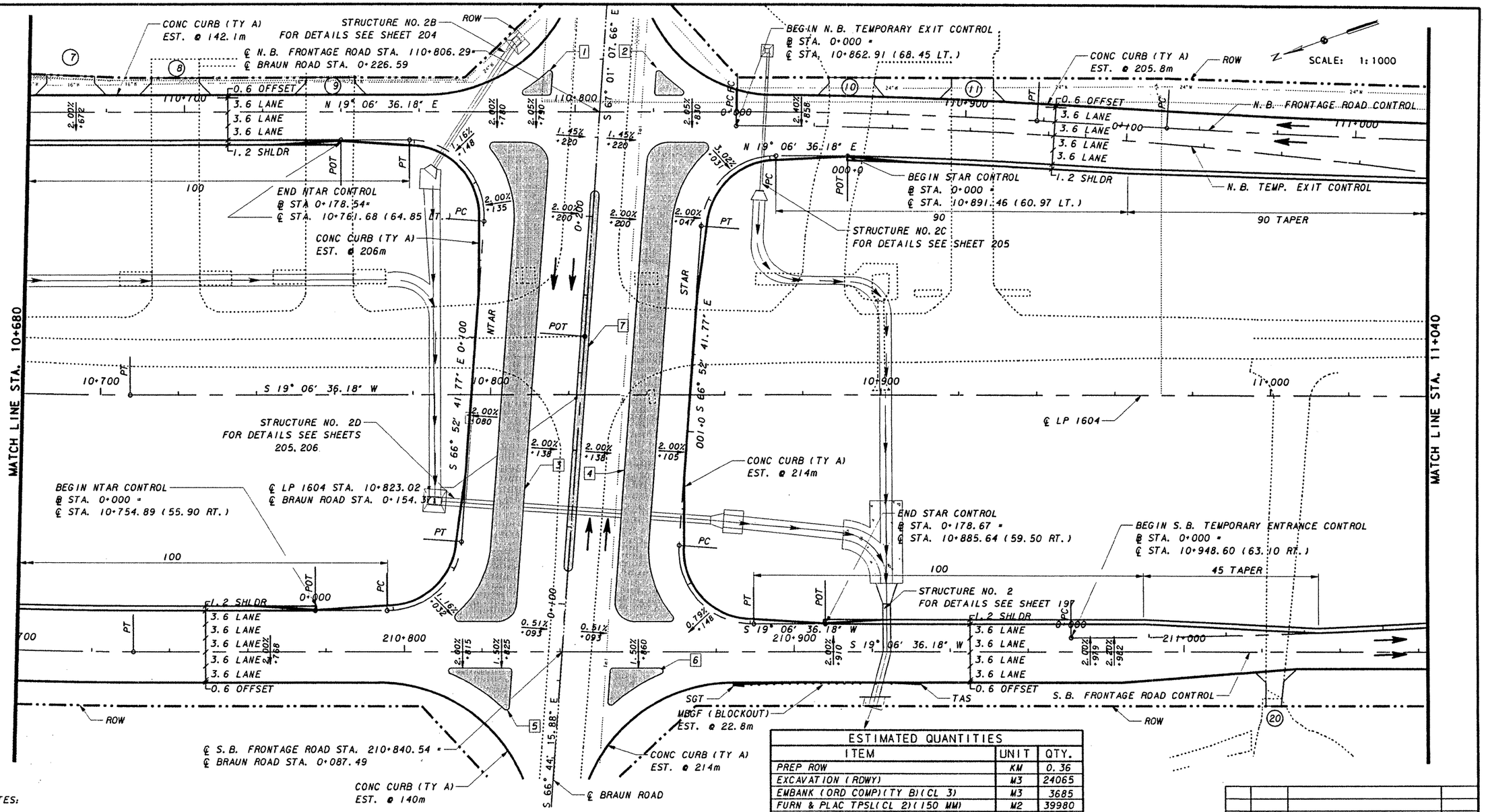

NOTES:

FOR HORIZONTAL GEOMETRY SEE SHEETS 17-25.
FOR REMOVAL ITEMS SEE SHEET 29.
FOR INTERSECTION DETAIL SEE SHEET 184.
FOR SIGNALIZATION DETAILS SEE SHEETS 308-311.
FOR ILLUMINATION DETAILS SEE SHEET 248.
ALL DIMENSIONS ARE IN METERS UNLESS OTHERWISE NOTED.

UTILITY LEGEND:

- 16"W — WATER
- Tel — TELEPHONE
- UG Tel — UNDERGROUND TELEPHONE
- 6"G — GAS LINE
- OH 1 PHASE ELEC
- OH 2 PHASE ELEC
- OH 3 PHASE ELEC
- SS — SANITARY SEWER

ISLAND QUANTITIES:	CONC CURB (TY A)	SURFACE AREA
* 1	EST. @ 21.9m	23.62 m2
* 2	EST. @ 21.4m	23.45 m2
3	EST. @ 287.1m	1042.71 m2
4	EST. @ 287.1m	1042.82 m2
5	EST. @ 44.4m	82.52 m2
6	EST. @ 38.6m	61.82 m2
7	EST. @ 196.8m	161.34 m2

* SEE BRAUN ROAD INTERSECTION LAYOUT AND DETAILS FOR DETAILS OF ISLAND 1 AND 2 WHEELCHAIR ACCESS.

ESTIMATED QUANTITIES

ITEM	UNIT	QTY.
PREP ROW	KM	0.36
EXCAVATION (RDWY)	M3	24065
EMBANK (ORD COMP)(TY B)(CL 3)	M3	3685
FURN & PLAC TPSL(CL 2)(150 MM)	M2	39980
DRILL SEED (PERM)(URBAN)(CLAY)	M2	39980
FLEX BASE (COMPL IN PLAC) (TY A GR 6)(CL 4)	M3	5598
*ASPH MATRL (AE-P)	M2	21059
*ONE CRSE SURF TREAT	M2	25933
*HMA (TY C)	M2	20512
*HMA (TY C) (SURF)	M2	19466
* ASPH STAB BASE (GR 4) (200MM)	M2	6289
CONC MEDIAN	M2	162
DRVWAYS (ASPH-CONC PAV)(TY 1)	M2	120
DRVWAYS (CONC)(TY 1)	M2	255
CONC CURB (TY A)	M	2179.2
SINGLE GDRAIL TERM	EA	1
MTL BEAM GD FEN (TIM POST)(BLK OUT)	M	22.8
TERM ANCHOR SECT (2.67MM)	EA	1
CONCRETE SIDEWALK (WHEELCHAIR RAMP)	M2	44.8

* FOR CONTRACTOR'S INFORMATION ONLY

NO.	DATE	REVISION	APPROV.

Texas Department of Transportation
LOOP 1604

PLAN SHEET
STA. 10+680 TO STA. 11+040

SHEET 4 OF 14

STATE OF TEXAS J. KEVIN KENNEDY 72984 REGISTERED PROFESSIONAL ENGINEER
J. Kevin Kennedy 5-2-97

Kimley-Horn and Associates, Inc.

Designed	LMF	DIST	FED REG	FEDERAL AID PROJECT				HIGHWAY
Checked	BHS	15	6	CD 2452-01-035				LP1604
Drawn	RWA	COUNTY			CONTROL	SECT	JOB	SHEET
Checked	JKK	BEXAR			2452	01	035	107

FILENAME: g:\67316-03\604rpp04.dgn PLOTTED: 02 MAY 97 14:14:13

LEVELS DISPLAYED

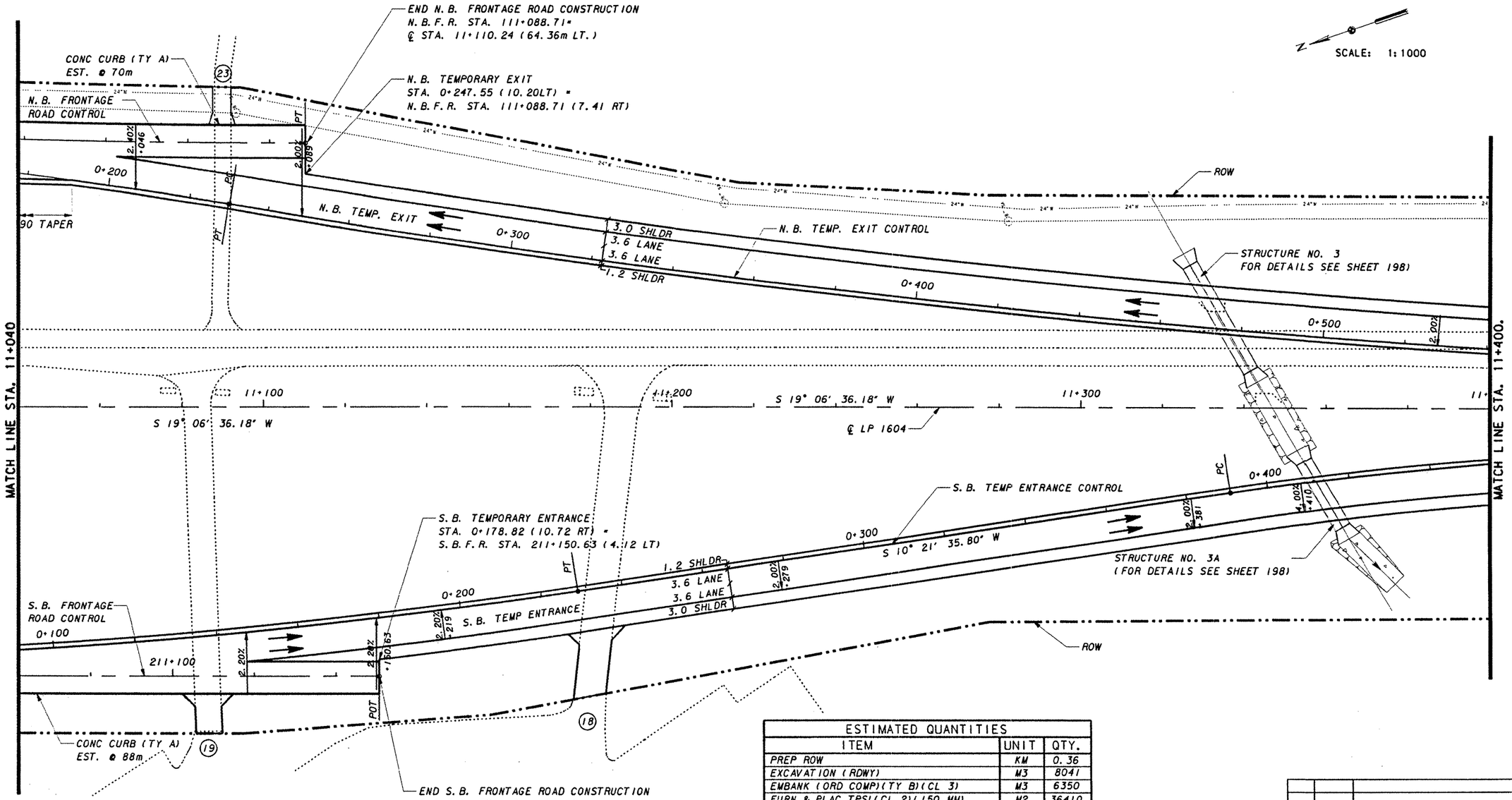

NOTES:

FOR HORIZONTAL GEOMETRY SEE SHEETS 17-25.
FOR REMOVAL ITEMS SEE SHEET 30.
FOR DRIVEWAY DETAILS SEE SHEET 60.
ALL DIMENSIONS ARE IN METERS UNLESS OTHERWISE NOTED.

UTILITY LEGEND:

- 16"W — WATER
- Tel — TELEPHONE
- UG Tel — UNDERGROUND TELEPHONE
- 6"G — GAS LINE
- OH 1 PHASE ELEC
- OH 2 PHASE ELEC
- OH 3 PHASE ELEC
- SS — SANITARY SEWER

ESTIMATED QUANTITIES

ITEM	UNIT	QTY.
PREP ROW	KM	0.36
EXCAVATION (ROWY)	M3	8041
EMBANK (ORD COMP)(TY B)(CL 3)	M3	6350
FURN & PLAC TPSL(CL 2)(150 MM)	M2	36410
DRILL SEED (PERM)(URBAN)(CLAY)	M2	36410
FLEX BASE (COMPL IN PLAC) (TY A GR 6)(CL 4)	M3	3650
*ASPH MATRL (AE-P)	M2	9518
*ONE CRSE SURF TREAT	M2	9518
*HWA (TY C)	M2	9335
*HWA (TY C) (SURF)	M2	9117
REPAIR EXIST FLEX PAV STRUCT(200MM)	M2	-
CONC MEDIAN	M2	-
DRVWAYS (ASPH-CONC PAV)(TY 1)	M2	208
DRVWAYS (CONC)(TY 1)	M2	25
CONC CURB (TY A)	M	158
SINGLE GDRAIL TERM	EA	-
MTL BEAM GD FEN (TIM POST)(2.67MM)	M	-
MTL BEAM GD FEN (TIM POST)(BLK OUT)	M	-
TERM ANCHOR SECT (2.67MM)	EA	-
POST - CABLE FENCE	M	-

* FOR CONTRACTOR'S INFORMATION ONLY

STATE OF TEXAS
J. KEVIN KENNEDY
72984
REGISTERED PROFESSIONAL ENGINEER

J. Kevin Kennedy
5-2-97

NO.	DATE	REVISION	APPROV.

Texas Department of Transportation
LOOP 1604

PLAN SHEET
STA. 11+040 TO STA. 11+400

SHEET 5 OF 14

Kimley-Horn and Associates, Inc.

Designed	LMW	DIST	FED REG	FEDERAL AID PROJECT				HIGHWAY
Checked	BHS	15	6	CD 2452-01-035				LP1604
Drawn	KWA	COUNTY			CONTROL	SECT	JOB	SHEET
Checked	JKK	BEXAR			2452	01	035	108

FILENAME: g:\67316-03\604rpp05.dgn PLOTTED: 02 MAY 97 13:20:45

LEVELS DISPLAYED
1 2 3 4 16 17 8 9 10 11 13 14 15 16
17 18 19 20 21 22 23 24 25 26 27 28 29 30 31 32
33 34 35 36 37 38 39 40 41 42 43 44 45 46 47 48
49 50 51 52 53 54 55 56 57 58 59 60 61 62 63

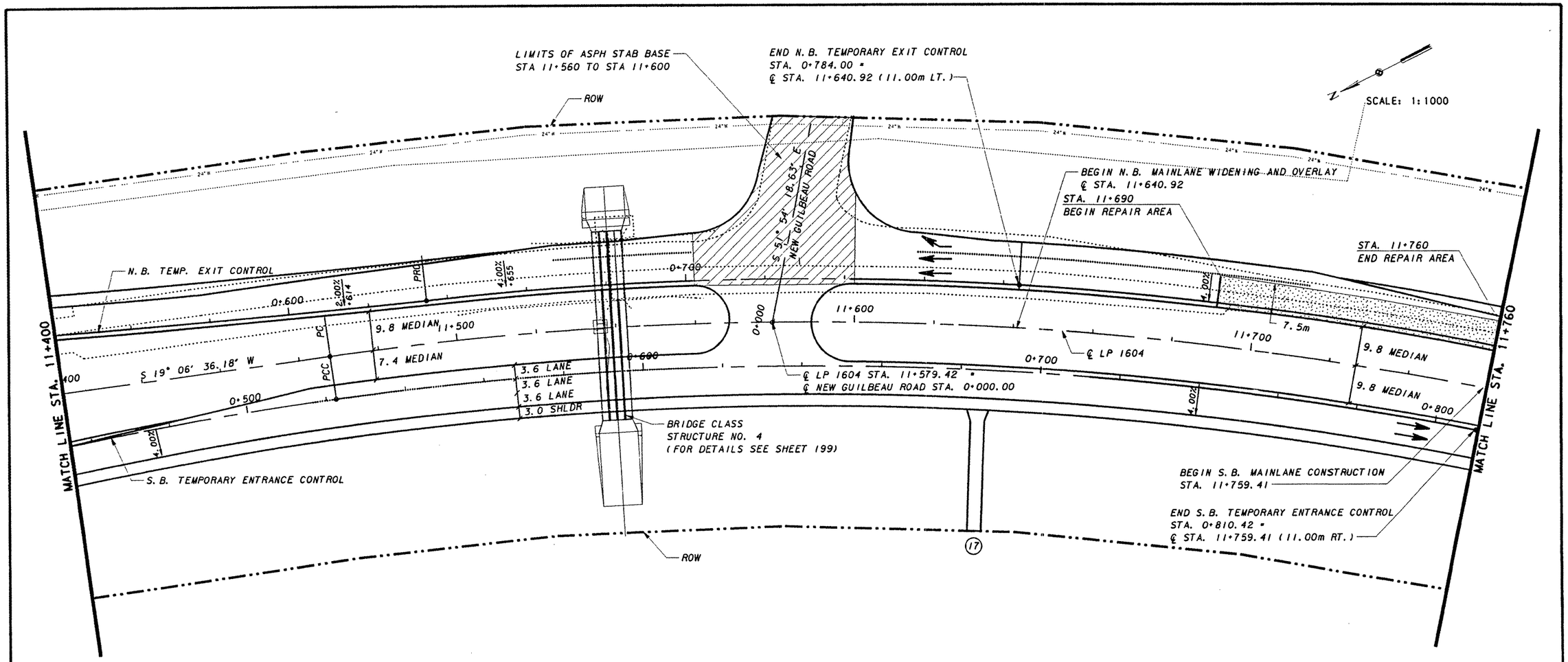

NOTES:

FOR HORIZONTAL GEOMETRY SEE SHEETS 17-25.
FOR REMOVAL ITEMS SEE SHEET 31.
FOR INTERSECTIN DETAILS SEE SHEET 185.
FOR ILLUMINATION DETAILS SEE SHEET 250.
FOR MAINLANE (N.B.) WIDENING, OVERLAY AND PAVEMENT REPAIR DETAILS SEE SHEET 9.
FOR DRIVEWAY DETAILS SEE SHEET 60.
FOR INTERSECTION STREET PROFILE SEE SHEET 144.
ALL DIMENSIONS ARE IN METERS UNLESS OTHERWISE NOTED.

UTILITY LEGEND:

- 16"W — WATER
- Tel — TELEPHONE
- UG Tel — UNDERGROUND TELEPHONE
- 6"G — GAS LINE
- OH 1 PHASE ELEC
- OH 2 PHASE ELEC
- OH 3 PHASE ELEC
- SS — SANITARY SEWER

ESTIMATED QUANTITIES

	ITEM	UNIT	QTY.
	PREP ROW	KM	0.36
	EXCAVATION (RDWY)	M3	6927
	EMBANK (ORD COMP)(TY B)(CL 3)	M3	3588
	FURN & PLAC TPSL(CL 2)(150 MM)	M2	27220
	DRILL SEED (PERM)(URBAN)(CLAY)	M2	27220
	FLEX BASE (COMPL IN PLAC) (TY A GR 6)(CL 4)	M3	2852
	*ASPH MATRL (AE-P)	M2	9480
	*ONE CRSE SURF TREAT	M2	9480
	*HMA (TY C)	M2	9255
	*HMA (TY C) (SURF)	M2	9944
	PLANE ASPH CONC PAV (0-40 mm)	M2	858
	REPAIR EXIST FLEX PAV STRUCT(200MM)	M2	525
	* ASPH. STAB. BASE (GR 4)(280mm)	M2	690
	DRVWAYS (ASPH-CONC PAV)(TY 1)	M2	111
*	ASPH STAB BASE (GR 4) (200 MM)	M2	1314
	CONC CURB (TY A)	M	-
	CONCRETE SIDEWALKS	M2	39.9
	MTL BEAM GD FEN (TIM POST)(2.67MM)	M	
	MTL BEAM GD FEN (TIM POST)(BLK OUT)	M	-
	TERM ANCHOR SECT (2.67MM)	EA	
	POST - CABLE FENCE	M	-

* FOR CONTRACTOR'S INFORMATION ONLY

STATE OF TEXAS
J. KEVIN KENNEDY
72984
REGISTERED
PROFESSIONAL ENGINEER

J. Kevin Kennedy
5-2-97

Texas Department of Transportation
LOOP 1604

PLAN SHEET
STA. 11+400 TO STA. 11+760

SHEET 6 OF 14

Kimley-Horn and Associates, Inc.

Designed	LMW	DIST	FED REG	FEDERAL AID PROJECT =				HIGHWAY
Checked	BHS	15	6	CD 2452-01-035				LP1604
Drawn	KWA	COUNTY			CONTROL	SECT	JOB	SHEET
Checked	JKK	BEXAR			2452	01	035	109

FILENAME: g:\67316-03\604rpa06.dgn PLOTTED: 02 MAY 97 13:23:58

LEVELS DISPLAYED

1	2	3	4	6	7	8	9	10	11	12	13	14	15	16	
17	18	19	20	21	22	23	24	25	26	27	28	29	30	31	32
33	34	35	36	37	38	39	40	41	42	43	44	45	46	47	48
49	50	51	52	53	54	55	56	57	58	59	60	61	62	63	

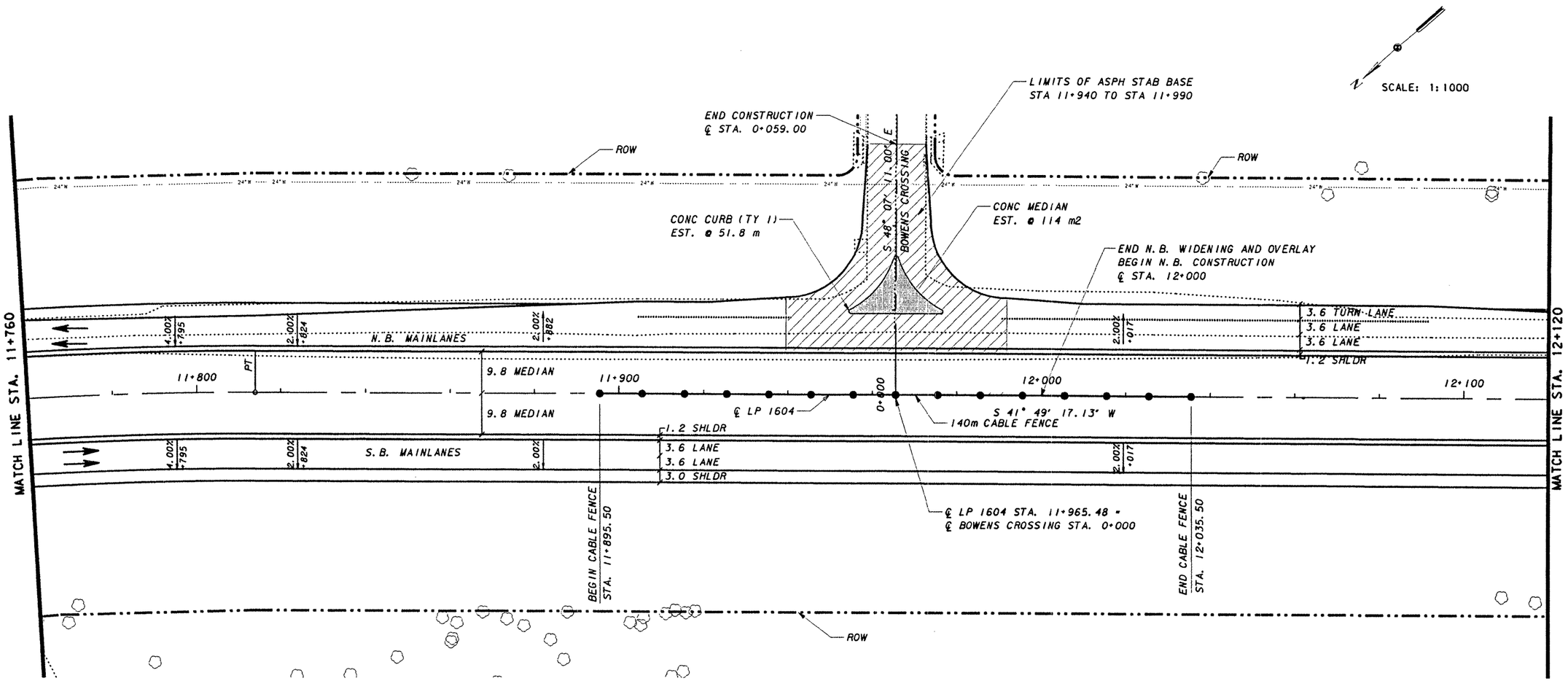

NOTES:

FOR HORIZONTAL GEOMETRY SEE SHEETS 17-25.
FOR REMOVAL ITEMS SEE SHEET 32.
FOR INTERSECTIN DETAILS SEE SHEET 186.
FOR ILLUMINATION DETAILS SEE SHEET 251.
FOR MAINLANE (N' BD) WIDENING, OVERLAY AND PAVEMENT REPAIR DETAILS SEE SHEET 9.
FOR DRIVEWAY DETAILS SEE SHEET 60.
FOR INTERSECTION STREET PROFILE SEE SHEET 144.
ALL DIMENSIONS ARE IN METERS UNLESS OTHERWISE NOTED.

UTILITY LEGEND:

- 16"W — WATER
- Tel — TELEPHONE
- UG Tel — UNDERGROUND TELEPHONE
- 6"G — GAS LINE
- OH 1 PHASE ELEC
- OH 2 PHASE ELEC
- OH 3 PHASE ELEC
- SS — SANITARY SEWER

ESTIMATED QUANTITIES

	ITEM	UNIT	QTY.
	PREP ROW	KM	0.36
	EXCAVATION (RDWY)	M3	4958
	EMBANK (ORD COMP)(TY B)(CL 3)	M3	3259
	FURN & PLAC TPSL(CL 2)(150 MM)	M2	28270
	DRILL SEED (PERM)(URBAN)(CLAY)	M2	28270
	FLEX BASE (COMPL IN PLAC) (TY A GR 6)(CL 4)	M3	1815
	*ASPH MATRL (AE-P)	M2	6220
	*ONE CRSE SURF TREAT	M2	6220
	*HMA (TY C)	M2	6032
	*HMA (TY C) (SURF)	M2	9019
	PLANE ASPH CONC PAV (0-40 mm)	M2	1728
	CONC MEDIAN	M2	114
	*ASPH. STAB. BASE (GR 4)(280mm)	M2	1900
*	ASPH STAB BASE (GR 4)(200 MM)	M2	1474
	DRVWAYS (CONC)(TY I)	M2	-
	CONC CURB (TY I)	M	51.8
	SINGLE GDRAIL TERM	EA	-
	MTL BEAM GD FEN (TIM POST)(2.67MM)	M	-
	MTL BEAM GD FEN (TIM POST)(BLK OUT)	M	-
	TERM ANCHOR SECT (2.67MM)	EA	-
	POST - CABLE FENCE	M	140

* FOR CONTRACTOR'S INFORMATION ONLY

STATE OF TEXAS
J. KEVIN KENNEDY
72984
REGISTERED PROFESSIONAL ENGINEER

J. Kevin Kennedy
5-2-97

Texas Department of Transportation
LOOP 1604

PLAN SHEET
STA. 11+760.00 TO STA. 12+120.00

SHEET 7 OF 14

Kimley-Horn and Associates, Inc.

Designed	LMW	DIST	FED REG	FEDERAL AID PROJECT #				HIGHWAY
Checked	BHS	15	6	CD 2452-01-035				LP1604
Drawn	MWA	COUNTY			CONTROL	SECT	JOB	SHEET
Checked	JKK	BEXAR			2452	01	035	110

LEVELS DISPLAYED

1	2	3	4	5	6	7	8	9	10	11	12	13	14	15	16
17	18	19	20	21	22	23	24	25	26	27	28	29	30	31	32
33	34	35	36	37	38	39	40	41	42	43	44	45	46	47	48
49	50	51	52	53	54	55	56	57	58	59	60	61	62	63	

FILENAME: g:\67316-03\604rpp07.dgn PLOTTED: 02 MAY 97 13:25:11

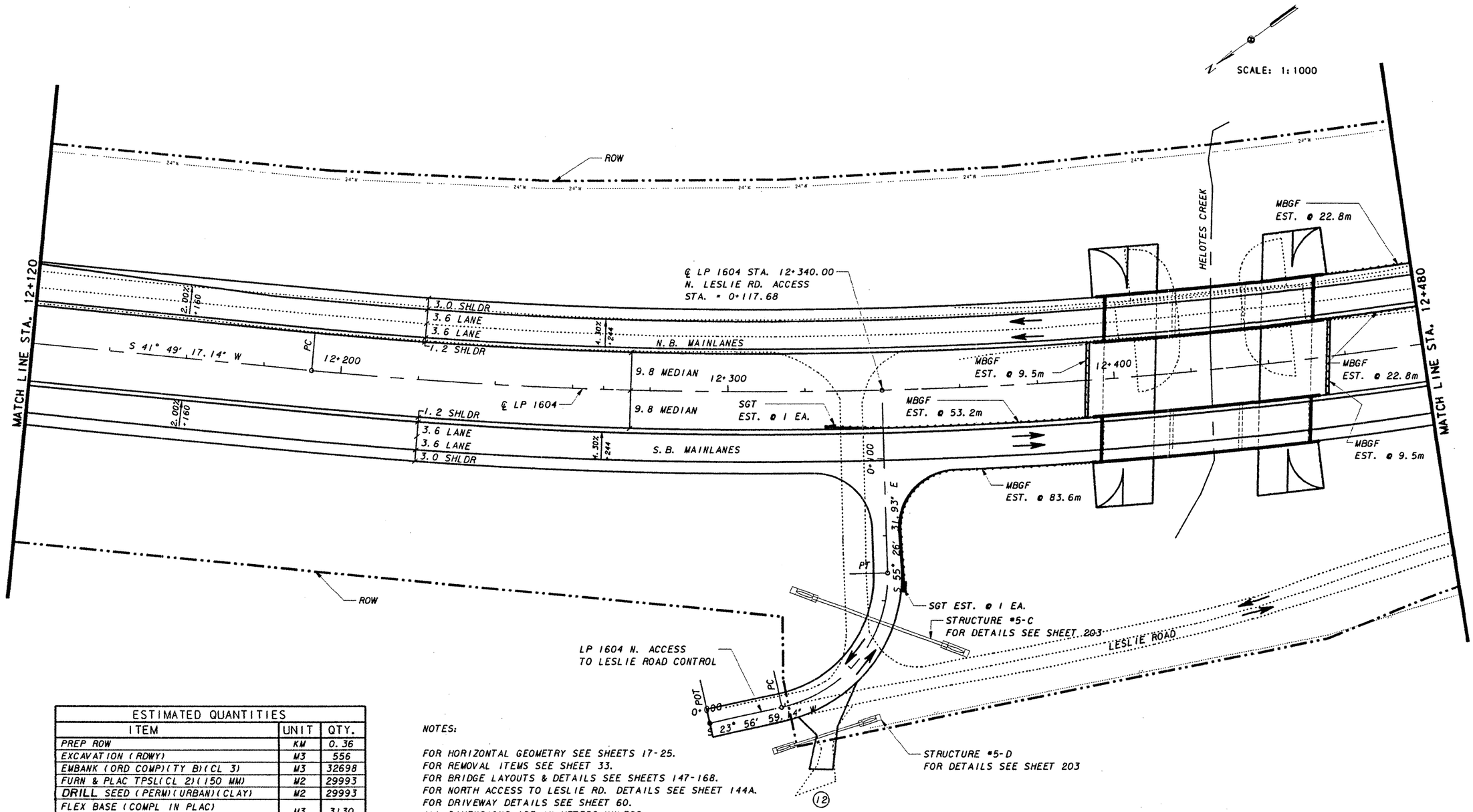

ESTIMATED QUANTITIES		
ITEM	UNIT	QTY.
PREP ROW	KM	0.36
EXCAVATION (RDWY)	M3	556
EMBANK (ORD COMP)(TY B)(CL 3)	M3	32698
FURN & PLAC TPSL(CL 2)(150 MM)	M2	29993
DRILL SEED (PERM)(URBAN)(CLAY)	M2	29993
FLEX BASE (COMPL IN PLAC) (TY A GR 6)(CL 4)	M3	3130
*ASPH MATRL (AE-P)	M2	8128
*ONE CRSE SURF TREAT	M2	8128
*HMA (TY C)	M2	7908
*HMA (TY C) (SURF)	M2	7745
REPAIR EXIST FLEX PAV STRUCT(200MM)	M2	-
CONC MEDIAN	M2	-
DRVWAYS (ASPH-CONC PAV)(TY 1)	M2	126
DRVWAYS (CONC)(TY 1)	M2	-
CONC CURB (TY A)	M	-
SINGLE GDRAIL TERM	EA	2
MTL BEAM GD FEN (TIM POST)(2.67MM)	M	201.4
MTL BEAM GD FEN (TIM POST)(BLK OUT)	M	-
TERM ANCHOR SECT (2.67MM)	EA	-
POST - CABLE FENCE	M	-
* FOR CONTRACTOR'S INFORMATION ONLY		

NOTES:

FOR HORIZONTAL GEOMETRY SEE SHEETS 17-25.
FOR REMOVAL ITEMS SEE SHEET 33.
FOR BRIDGE LAYOUTS & DETAILS SEE SHEETS 147-168.
FOR NORTH ACCESS TO LESLIE RD. DETAILS SEE SHEET 144A.
FOR DRIVEWAY DETAILS SEE SHEET 60.
ALL DIMENSIONS ARE IN METERS UNLESS OTHERWISE NOTED.

UTILITY LEGEND:

- 16"W — WATER
- Tel — TELEPHONE
- UG Tel — UNDERGROUND TELEPHONE
- 6"G — GAS LINE
- OH 1 PHASE ELEC
- OH 2 PHASE ELEC
- OH 3 PHASE ELEC
- SS — SANITARY SEWER

STATE OF TEXAS
J. KEVIN KENNEDY
72984
REGISTERED PROFESSIONAL ENGINEER

J. Kevin Kennedy
5-2-97

Texas Department of Transportation
LOOP 1604

PLAN SHEET
STA. 12+120 TO STA. 12+480

SHEET 8 OF 14

Kimley-Horn and Associates, Inc.

Designed	LMW	DIST	FED REG	FEDERAL AID PROJECT #			HIGHWAY
Checked	BHS	15	6	CD 2452-01-035			LP1604
Drawn	KWA	COUNTY		CONTROL	SECT	JOB	SHEET
Checked	JKK	BEXAR		2452	01	035	111

FILENAME: g:\67316-03\604rpp08.dgn PLOTTED: 02 MAY 97 13:32:38

LEVELS DISPLAYED

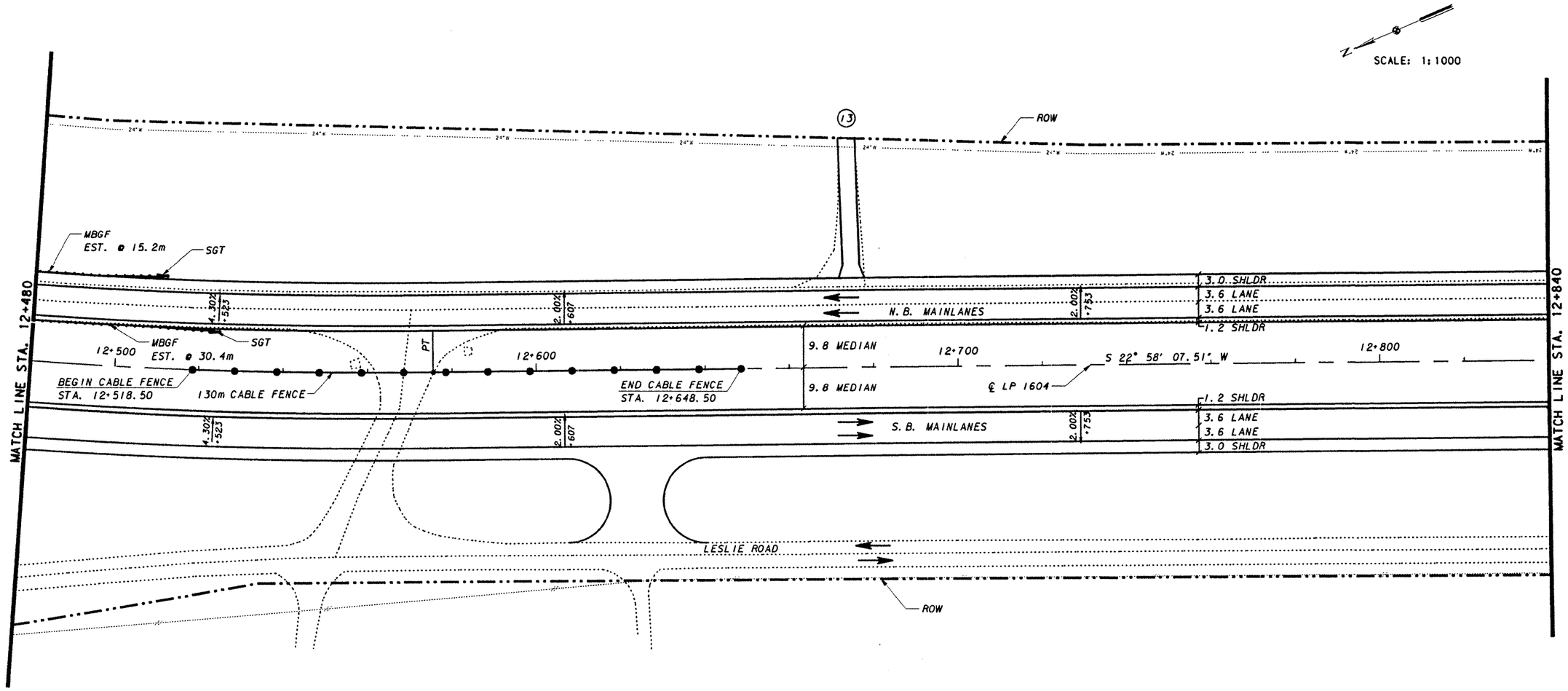

NOTES:

FOR HORIZONTAL GEOMETRY SEE SHEETS 17-25.
FOR REMOVAL ITEMS SEE SHEET 34.
ALL DIMENSIONS ARE IN METERS UNLESS OTHERWISE NOTED.

UTILITY LEGEND:

- 16"W — WATER
- Tel — TELEPHONE
- UG Tel — UNDERGROUND TELEPHONE
- 6"G — GAS LINE
- OH 1 PHASE ELEC
- OH 2 PHASE ELEC
- OH 3 PHASE ELEC
- SS — SANITARY SEWER

ESTIMATED QUANTITIES		
ITEM	UNIT	QTY.
PREP ROW	KM	0.36
EXCAVATION (RDWY)	M3	917
EMBANK (ORD COMP)(TY B)(CL 3)	M3	21205
FURN & PLAC TPSL(CL 2)(150 MM)	M2	29570
DRILL SEED (PERM)(URBAN)(CLAY)	M2	29570
FLEX BASE (COMPL IN PLAC) (TY A GR 6)(CL 4)	M3	3470
*ASPH MATRL (AE-P)	M2	9017
*ONE CRSE SURF TREAT	M2	9017
*HMA (TY C)	M2	8782
*HMA (TY C) (SURF)	M2	8547
REPAIR EXIST FLEX PAV STRUCT(200MM)	M2	-
CONC MEDIAN	M2	-
DRVWAYS (ASPH-CONC PAV)(TY 1)	M2	134
DRVWAYS (CONC)(TY 1)	M2	-
CONC CURB (TY A)	M	-
SINGLE GDRAIL TERM	EA	2
MTL BEAM GD FEN (TIM POST)(2.67MM)	M	45.6
MTL BEAM GD FEN (TIM POST)(BLK OUT)	M	-
TERM ANCHOR SECT (2.67MM)	EA	-
POST - CABLE FENCE	M	130

* FOR CONTRACTOR'S INFORMATION ONLY

STATE OF TEXAS
J. KEVIN KENNEDY
72984
REGISTERED
PROFESSIONAL ENGINEER
J. Kevin Kennedy
5-2-97

Texas Department of Transportation
LOOP 1604

PLAN SHEET
STA. 12+480 TO STA. 12+840

SHEET 9 OF 14

Kimley-Horn and Associates, Inc.

Designed	LMW	DIST	FED REG	FEDERAL AID PROJECT		HIGHWAY
Checked	BHS	15	6	CD 2452-01-035		LP1604
Drawn	KWA	COUNTY		CONTROL SECT	JOB	SHEET
Checked	JKK	BEXAR		2452 01	035	112

FILENAME: g:\67316-03\604rpp09.dgn PLOTTED: 02 MAY 97 13:36:26

LEVELS DISPLAYED

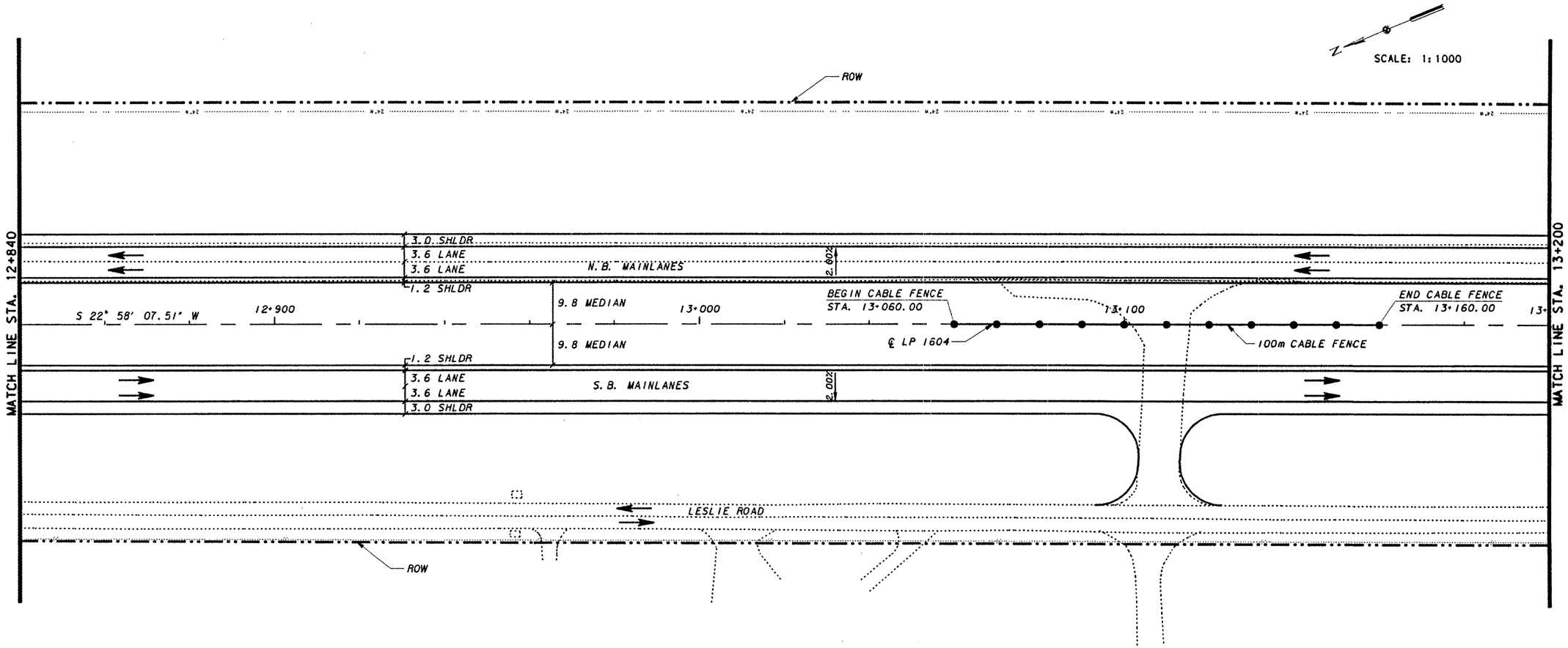

NOTES:

FOR HORIZONTAL GEOMETRY SEE SHEETS 17-25
FOR REMOVAL ITEMS SEE SHEETS 35

ALL DIMENSIONS ARE IN METERS UNLESS OTHERWISE NOTED.

UTILITY LEGEND:

- 16"W — WATER
- Tel — TELEPHONE
- UG Tel — UNDERGROUND TELEPHONE
- 6"G — GAS LINE
- OH 1 PHASE ELEC
- OH 2 PHASE ELEC
- OH 3 PHASE ELEC
- SS — SANITARY SEWER

ESTIMATED QUANTITIES

ITEM	UNIT	QTY.
PREP ROW	KM	0.36
EXCAVATION (RDWY)	M3	3932
EMBANK (ORD COMP)(TY B)(CL 3)	M3	2320
FURN & PLAC TPSL(CL 2)(150 MM)	M2	28880
DRILL SEED (PERM)(URBAN)(CLAY)	M2	28880
FLEX BASE (COMPL IN PLAC) (TY A GR 6)(CL 4)	M3	3441
*ASPH MATRL (AE-P)	M2	8952
*ONE CRSE SURF TREAT	M2	8952
*HMA (TY C)	M2	8729
*HMA (TY C) (SURF)	M2	8507
REPAIR EXIST FLEX PAV STRUCT(200MM)	M2	-
CONC MEDIAN	M2	-
DRVWAYS (ASPH-CONC PAV)(TY 1)	M2	
DRVWAYS (CONC)(TY 1)	M2	-
CONC CURB (TY A)	M	-
SINGLE GDRAIL TERM	EA	-
MTL BEAM GD FEN (TIM POST)(2.67MM)	M	-
MTL BEAM GD FEN (TIM POST)(BLK OUT)	M	-
TERM ANCHOR SECT (2.67MM)	EA	-
POST - CABLE FENCE	M	100

* FOR CONTRACTOR'S INFORMATION ONLY

STATE OF TEXAS
J. KEVIN KENNEDY
72984
REGISTERED PROFESSIONAL ENGINEER

J. Kevin Kennedy
5-2-97

Texas Department of Transportation
LOOP 1604

PLAN SHEET
STA. 12+840 TO STA. 13+200

SHEET 10 OF 14

Kimley-Horn and Associates, Inc.

Designed	LMF	DIST	FED REG	FEDERAL AID PROJECT				HIGHWAY
Checked	BHS	15	6	CD 2452-01-035				LP1604
Drawn	KWA	COUNTY			CONTROL	SECT	JOB	SHEET
Checked	JKK	BEXAR			2452	01	035	113

FILENAME: g:\67336-03\604rpp10.dgn PLOTTED: 02 MAY 97 13:37:35

LEVELS DISPLAYED

1	2	3	4	5	6	7	8	9	10	11	12	13	14	15	16	
17	18	19	20	21	22	23	24	25	26	27	28	29	30	31	32	
33	34	35	36	37	38	39	40	41	42	43	44	45	46	47	48	
49	50	51	52	53	54	55	56	57	58	59	60	61	62	63		

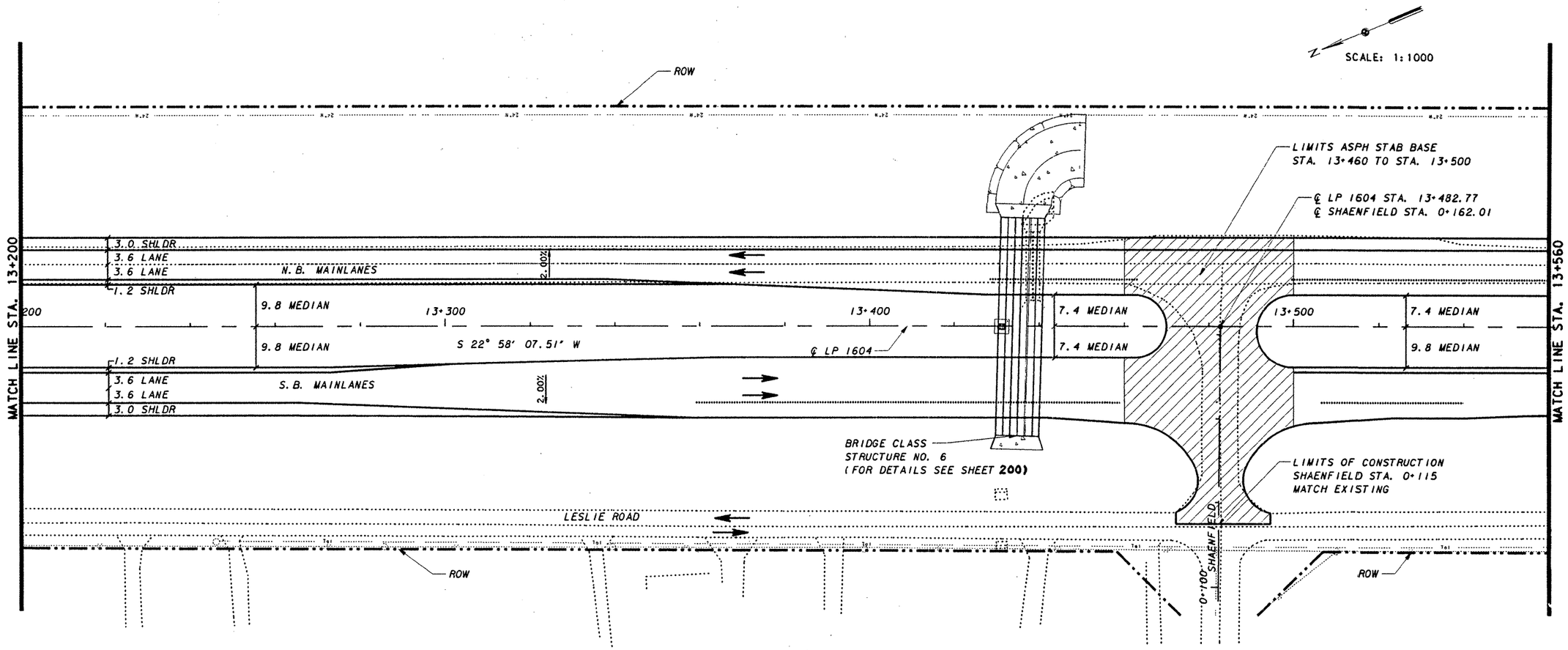

NOTES:

FOR HORIZONTAL GEOMETRY SEE SHEETS 17-25.
FOR REMOVAL ITEMS SEE SHEET 36.
FOR INTERSECTION DETAILS SEE SHEET 187.
FOR ILLUMINATION DETAILS SEE SHEETS 252-253.
FOR INTERSECTING STREET PROFILE SEE SHEET 144.
ALL DIMENSIONS ARE IN METERS UNLESS OTHERWISE NOTED.

UTILITY LEGEND:

- 16"W — WATER
- Tel — TELEPHONE
- UG Tel — UNDERGROUND TELEPHONE
- 6"G — GAS LINE
- OH 1 PHASE ELEC
- OH 2 PHASE ELEC
- OH 3 PHASE ELEC
- SS — SANITARY SEWER

ESTIMATED QUANTITIES

	ITEM	UNIT	QTY.
	PREP ROW	KM	0.36
	EXCAVATION (RDWY)	M3	1587
	EMBANK (ORD COMP)(TY B)(CL 3)	M3	10610
	FURN & PLAC TPSL(CL 2)(150 MM)	M2	27936
	DRILL SEED (PERM)(URBAN)(CLAY)	M2	27936
	FLEX BASE (COMPL IN PLAC) (TY A GR 6)(CL 4)	M3	3172
	*ASPH MATRL (AE-P)	M2	10304
	*ONE CRSE SURF TREAT	M2	10304
	*HMA (TY C)	M2	10088
	*HMA (TY C) (SURF)	M2	9871
	REPAIR EXIST FLEX PAV STRUCT(200MM)	M2	-
	CONC MEDIAN	M2	-
	DRVWAYS (ASPH-CONC PAV)(TY 1)	M2	-
*	ASPH STAB BASE (GR 4) (200 MM)	M2	2042
	CONC CURB (TY A)	M	-
	SINGLE GDRAIL TERM	EA	-
	MTL BEAM GD FEN (TIM POST)(2.67MM)	M	-
	MTL BEAM GD FEN (TIM POST)(BLK OUT)	M	-
	TERM ANCHOR SECT (2.67MM)	EA	-
	POST - CABLE FENCE	M	-

* FOR CONTRACTOR'S INFORMATION ONLY

STATE OF TEXAS
J. KEVIN KENNEDY
72984
REGISTERED PROFESSIONAL ENGINEER
J. Kevin Kennedy
5-2-97

Texas Department of Transportation
LOOP 1604

PLAN SHEET
STA. 13+200 TO STA. 13+560

SHEET 11 OF 14

Kimley-Horn and Associates, Inc.

Designed	LMW	DIST	FED REG	FEDERAL AID PROJECT				HIGHWAY
Checked	BHS	15	6	CD 2452-01-035				LP1604
Drawn	KWA	COUNTY		CONTROL	SECT	JOB		SHEET
Checked	JKK	BEXAR		2452	01	035		114

FILENAME: g:\67316-03\604rpp11.dgn PLOTTED: 02 MAY 97 13:39:27

LEVELS DISPLAYED

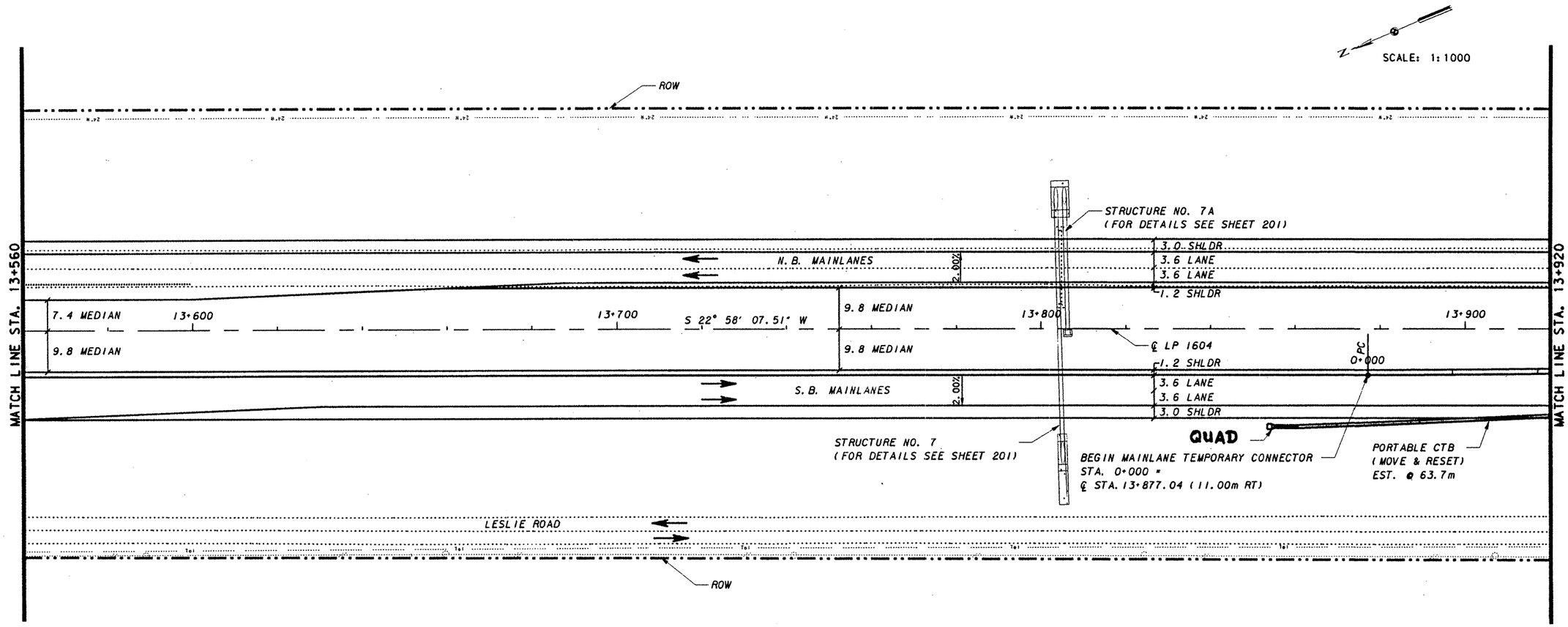

NOTES:

FOR HORIZONTAL GEOMETRY SEE SHEETS 17-25.
FOR REMOVAL ITEMS SEE SHEET 37.
ALL DIMENSIONS ARE IN METERS UNLESS OTHERWISE NOTED.

UTILITY LEGEND:

- 16"W — WATER
- Tel — TELEPHONE
- UG Tel — UNDERGROUND TELEPHONE
- 6"G — GAS LINE
- OH 1 PHASE ELEC
- OH 2 PHASE ELEC
- OH 3 PHASE ELEC
- SS — SANITARY SEWER

ESTIMATED QUANTITIES

ITEM	UNIT	QTY.
PREP ROW	KM	0.36
EXCAVATION (RDWY)	M3	1115
EMBANK (ORD COMP)(TY B)(CL 3)	M3	10239
FURN & PLAC TPSL(CL 2)(150 MM)	M2	29498
DRILL SEED (PERM)(URBAN)(CLAY)	M2	29498
FLEX BASE (COMPL IN PLAC) (TY A GR 6)(CL 4)	M3	3385
*ASPH MATRL (AE-P)	M2	8810
*ONE CRSE SURF TREAT	M2	8810
*HMA (TY C)	M2	8594
*HMA (TY C) (SURF)	M2	8378
REPAIR EXIST FLEX PAV STRUCT(200MM)	M2	-
CONC MEDIAN	M2	-
DRVWAYS (ASPH-CONC PAV)(TY 1)	M2	-
DRVWAYS (CONC)(TY 1)	M2	-
PORT CONC TRF BAR (MOVE & RESET)	M	63.7
SINGLE GDRAIL TERM	EA	-
MTL BEAM GD FEN (TIM POST)(2.67MM)	M	-
MTL BEAM GD FEN (TIM POST)(BLK OUT)	M	-
QUAD. SYS. (760mm) 10 BAY(TY B)	EA	1
POST - CABLE FENCE	M	-

* FOR CONTRACTOR'S INFORMATION ONLY

STATE OF TEXAS
J. KEVIN KENNEDY
72984
REGISTERED PROFESSIONAL ENGINEER

J. Kevin Kennedy
5-2-97

Texas Department of Transportation
LOOP 1604

PLAN SHEET
STA. 13+560 TO STA. 13+920

SHEET 12 OF 14

Kimley-Horn and Associates, Inc.

Designed	LMW	DIST	FED REG	FEDERAL AID PROJECT			HIGHWAY
Checked	BMS	15	6	CD 2452-01-035			LP1604
Drawn	KWA	COUNTY		CONTROL	SECT	JOB	SHEET
Checked	JKK	BEXAR		2452	01	035	115

LEVELS DISPLAYED

1	2	3	4	6	7	8	9	10	11	12	13	14	15	16	
17	18	19	20	21	22	23	24	25	26	27	28	29	30	31	32
33	34	35	36	37	38	39	40	41	42	43	44	45	46	47	48
49	50	51	52	53	54	55	56	57	58	59	60	61	62	63	

FILENAME: g:\67316-03\604ppt2.dgn PLOTTED: 02 MAY 97 13:41:26

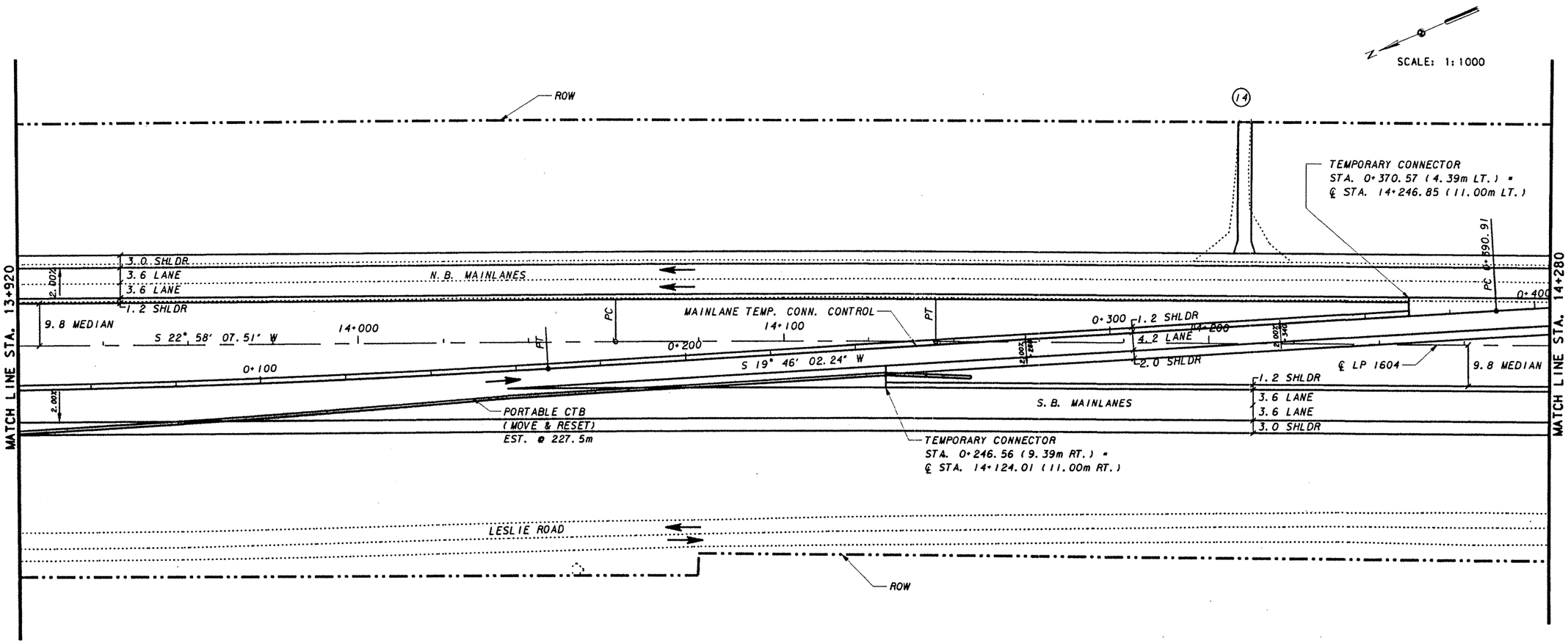

NOTES:

FOR HORIZONTAL GEOMETRY SEE SHEETS 17-25.
FOR REMOVAL ITEMS SEE SHEET 38.
FOR MAINLANE TEMPORARY CONNECTOR PROFILE SEE SHEET 127.
ALL DIMENSIONS ARE IN METERS UNLESS OTHERWISE NOTED.

UTILITY LEGEND:

- 16"W — WATER
- Tel — TELEPHONE
- UG Tel — UNDERGROUND TELEPHONE
- 6"G — GAS LINE
- OH 1 PHASE ELEC
- OH 2 PHASE ELEC
- OH 3 PHASE ELEC
- SS — SANITARY SEWER

ESTIMATED QUANTITIES

ITEM	UNIT	QTY.
PREP ROW	KM	0.36
EXCAVATION (RDWY)	M3	9698
EMBANK (ORD COMP)(TY B)(CL 3)	M3	2468
FURN & PLAC TPSL(CL 2)(150 MM)	M2	27235
DRILL SEED (PERM)(URBAN)(CLAY)	M2	27235
FLEX BASE (COMPL IN PLAC) (TY A GR 6)(CL 4)	M3	4520
*ASPH MATRL (AE-P)	M2	11853
*ONE CRSE SURF TREAT	M2	11853
*HMA (TY C)	M2	11647
*HMA (TY C) (SURF)	M2	11435
REPAIR EXIST FLEX PAV STRUCT(200MM)	M2	-
CONC MEDIAN	M2	-
DRVWAYS (ASPH-CONC PAV)(TY 1)	M2	99
DRVWAYS (CONC)(TY 1)	M2	-
PORT CONC TRF BAR (MOVE & RESET)	M	227.5
SINGLE GDRAIL TERM	EA	-
MTL BEAM GD FEN (TIM POST)(2.67MM)	M	-
MTL BEAM GD FEN (TIM POST)(BLK OUT)	M	-
TERM ANCHOR SECT (2.67MM)	EA	-
POST - CABLE FENCE	M	-

* FOR CONTRACTOR'S INFORMATION ONLY

STATE OF TEXAS
J. KEVIN KENNEDY
72984
REGISTERED
PROFESSIONAL ENGINEER

J. Kevin Kennedy
5-2-97

Texas Department of Transportation
LOOP 1604

PLAN SHEET
STA. 13+920 TO STA. 14+280

SHEET 13 OF 14

Kimley-Horn and Associates, Inc.

Designed	LMF	DIST	FED REG	FEDERAL AID PROJECT				HIGHWAY
Checked	BNS	15	6	CD 2452-01-035				LP1604
Drawn	KWA	COUNTY			CONTROL	SECT	JOB	SHEET
Checked	JKK	BEXAR			2452	01	035	116

LEVELS DISPLAYED																
1	2	3	4	5	6	7	8	9	10	11	12	13	14	15	16	
17	18	19	20	21	22	23	24	25	26	27	28	29	30	31	32	
33	34	35	36	37	38	39	40	41	42	43	44	45	46	47	48	
49	50	51	52	53	54	55	56	57	58	59	60	61	62			

FILENAME: g:\67316-03\604rpp13.dgn PLOTTED: 02 MAY 97 13:43:23

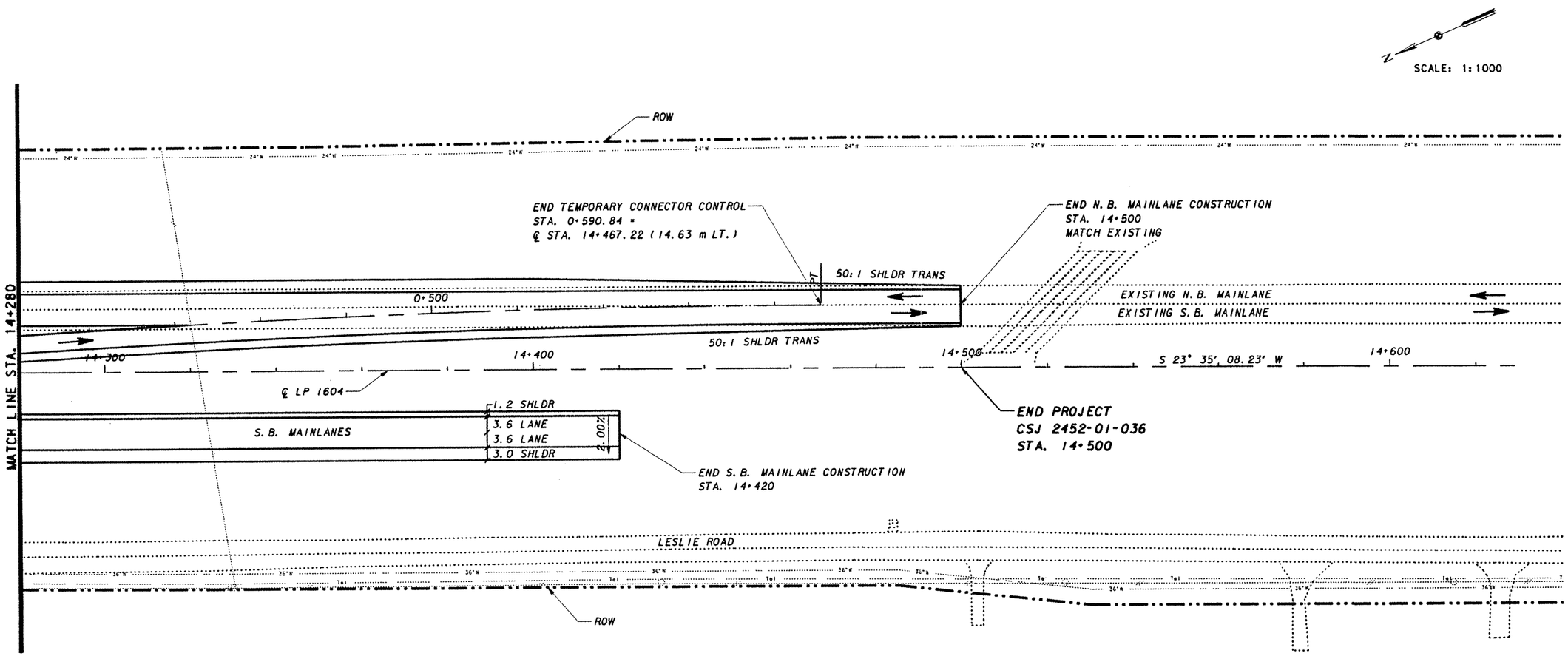

NOTES:

FOR HORIZONTAL GEOMETRY SEE SHEETS 17-25
FOR REMOVAL ITEMS SEE SHEET 39
FOR MAINLANE TEMPORARY CONNECTION
PROFILE DATA SEE SHEET 127.
ALL DIMENSIONS ARE IN METERS UNLESS
OTHERWISE NOTED.

UTILITY LEGEND:

- 16"W — WATER
- Tel — TELEPHONE
- UG Tel — UNDERGROUND TELEPHONE
- 6"G — GAS LINE
- OH 1 PHASE ELEC
- OH 2 PHASE ELEC
- OH 3 PHASE ELEC
- SS — SANITARY SEWER

ESTIMATED QUANTITIES

ITEM	UNIT	QTY.
PREP ROW	KM	0.22
EXCAVATION (RDWY)	M3	6042
EMBANK (ORD COMP)(TY B)(CL 3)	M3	460
FURN & PLAC TPSL(CL 2)(150 MM)	M2	15830
DRILL SEED (PERM)(URBAN)(CLAY)	M2	15830
FLEX BASE (COMPL IN PLAC) (TY A GR 6)(CL 4)	M3	1901
*ASPH MATRL (AE-P)	M2	4855
*ONE CRSE SURF TREAT	M2	4855
*HMA (TY C)	M2	4748
*HMA (TY C) (SURF)	M2	4640
REPAIR EXIST FLEX PAV STRUCT(200MM)	M2	-
CONC MEDIAN	M2	-
DRVWAYS (ASPH-CONC PAV)(TY 1)	M2	-
DRVWAYS (CONC)(TY 1)	M2	-
CONC CURB (TY A)	M	-
SINGLE GDRAIL TERM	EA	-
MTL BEAM GD FEN (TIM POST)(2.67MM)	M	-
MTL BEAM GD FEN (TIM POST)(BLK OUT)	M	-
TERM ANCHOR SECT (2.67MM)	EA	-
POST - CABLE FENCE	M	-

* FOR CONTRACTOR'S INFORMATION ONLY

STATE OF TEXAS
J. KEVIN KENNEDY
72984
REGISTERED
PROFESSIONAL ENGINEER

J. Kevin Kennedy
5-2-97

Texas Department of Transportation
LOOP 1604

PLAN SHEET
STA. 14+280 TO STA. 14+640

SHEET 14 OF 14

Kimley-Horn and Associates, Inc.

Designed	LMW	DIST	FED REG	FEDERAL AID PROJECT					HIGHWAY
Checked	BHS	15	6	CD 2452-01-035					LP1604
Drawn	RWA	COUNTY			CONTROL	SECT	JOB		SHEET
Checked	JKK	BEXAR			2452	01	035		117

LEVELS DISPLAYED

1	2	3	4	6	7	8	9	10	11	12	13	14	15	16		
17	18	19	20	21	22	23	24	25	26	27	28	29	30	31	32	
33	34	35	36	37	38	39	40	41	42	43	44	45	46	47	48	
49	50	51	52	53	54	55	56	57	58	59	60	61	62			

FILENAME: g:\67316-03\604rpp14.dgn PLOTTED: 02 MAY 97 13:44:36

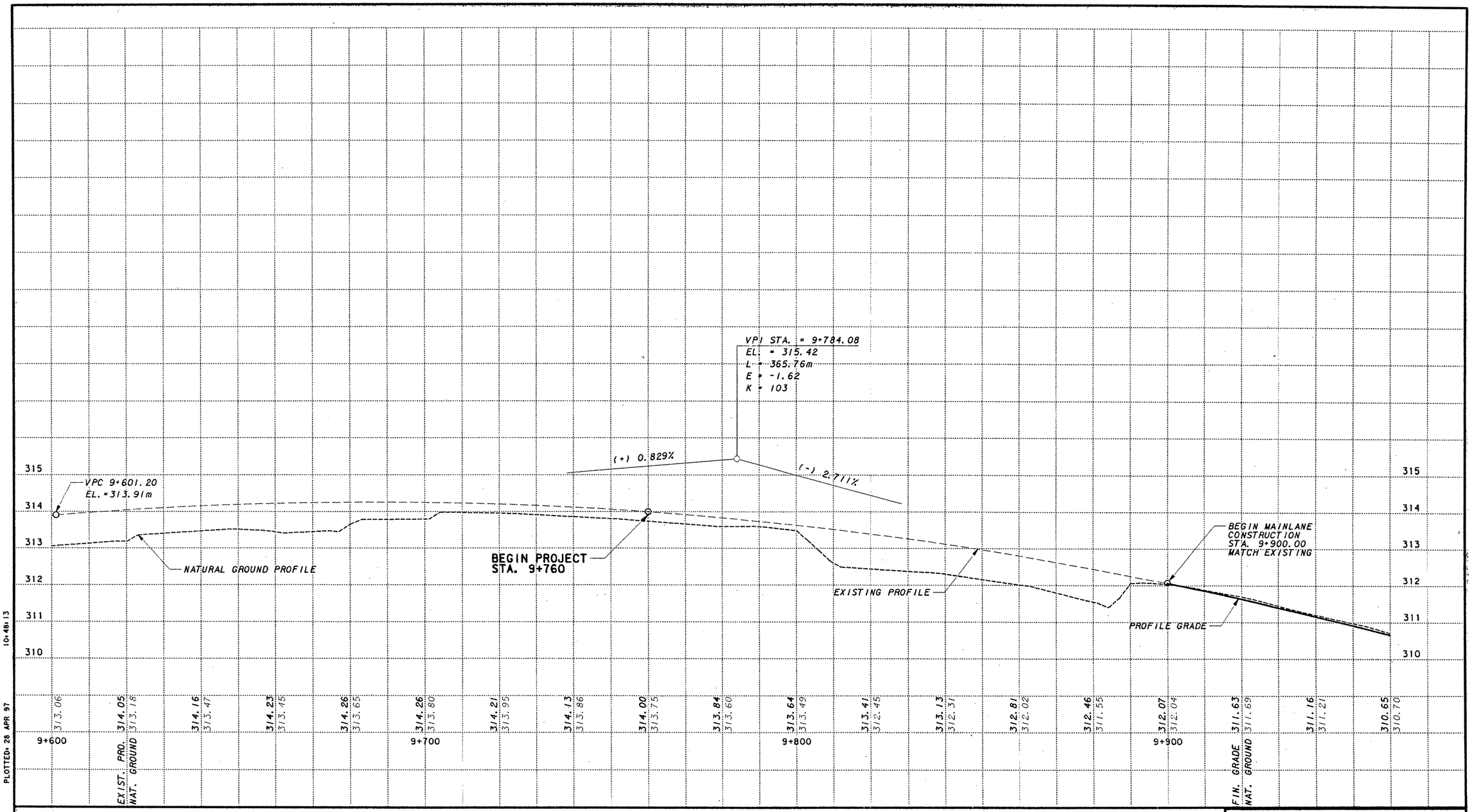

SCALE: 1:100 V
1:1000 H

STATE OF TEXAS
R. H. SHELLABARGER
75927
REGISTERED
PROFESSIONAL ENGINEER

Rebecca H. Shellabarger
2 May 97

Texas Department of Transportation
LOOP 1604

MAINLANE PROFILE SHEET
BEGIN PROJECT TO STA. 9+960

SHEET 1 OF 11

Kimley-Horn and Associates, Inc.

Designed	LMW	DIST	FED REG	FEDERAL AID PROJECT #				HIGHWAY
Checked	BHS	15	6	CD 2452-01-035				LP1604
Drawn	KWA	COUNTY			CONTROL	SECT	JOB	SHEET
Checked	BHS	BEXAR			2452	01	035	118

LEVELS DISPLAYED																																	
1	2	3	4	5	6	7	8	9	10	11	12	13	14	15	16	17	18	19	20	21	22	23	24	25	26	27	28	29	30	31	32	33	34
35	36	37	38	39	40	41	42	43	44	45	46	47	48	49	50	51	52	53	54	55	56	57	58	59	60	61	62	63					

FILENAME: G:\67316-03\604RVP01.DGN PLOTTED: 28 APR 97 10:48:13

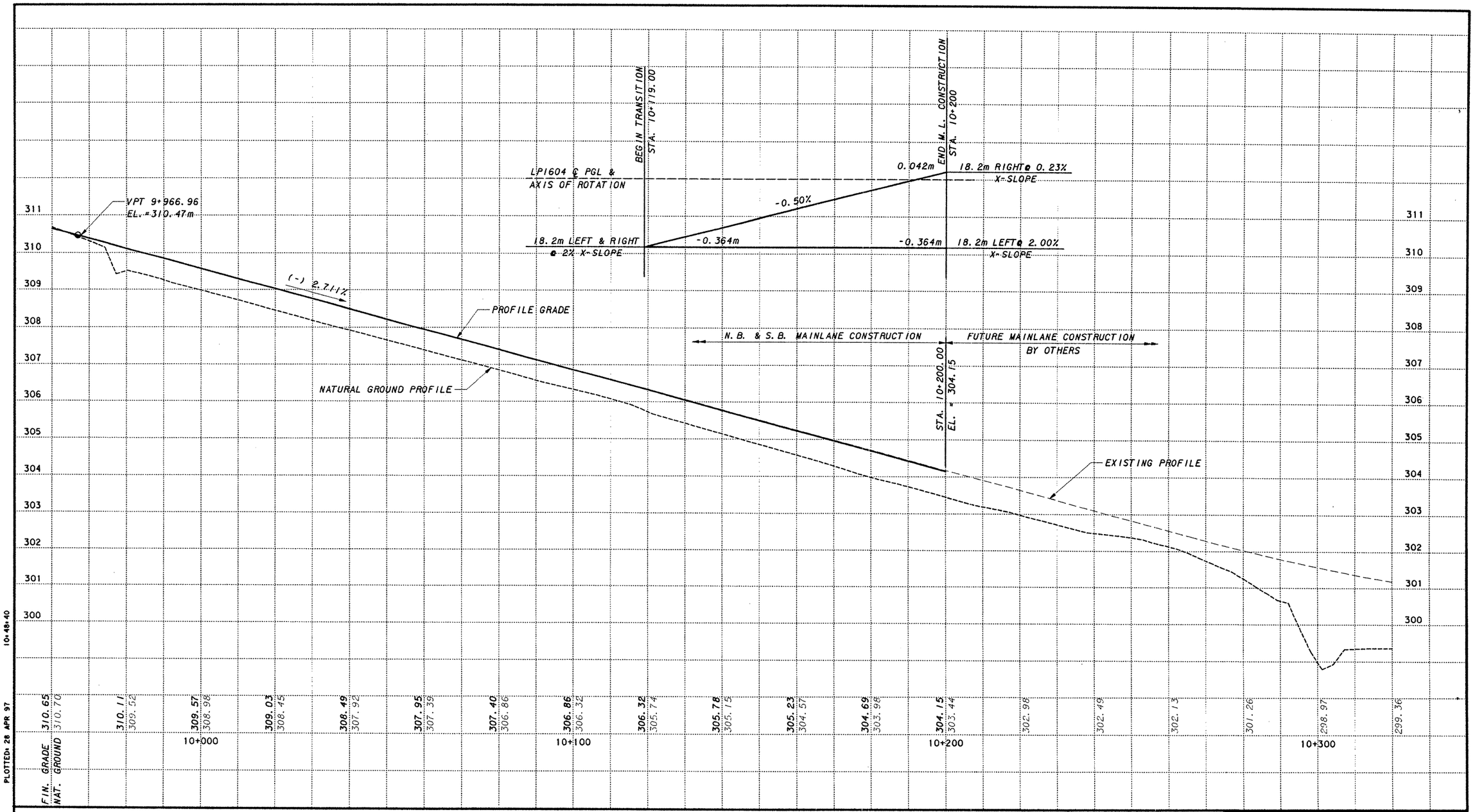

PLOTTED: 28 APR 97 10:48:40

FILENAME: G:\67316-03\604RVP02.dgn

LEVELS DISPLAYED																																	
1	2	3	4	5	6	7	8	9	10	11	12	13	14	15	16	17	18	19	20	21	22	23	24	25	26	27	28	29	30	31	32	33	34
35	36	37	38	39	40	41	42	43	44	45	46	47	48	49	50	51	52	53	54	55	56	57	58	59	60	61	62	63					

SCALE: 1:100 V
1:1000 H

STATE OF TEXAS
R. H. SHELLABARGER
75927
REGISTERED PROFESSIONAL ENGINEER

Rebecca H. Shellabarger
2 May 97

Texas Department of Transportation
LOOP 1604

MAINLANE PROFILE GRADE
STA. 9+960 TO STA. 10+320

SHEET 2 OF 11

Kimley-Horn and Associates, Inc.

Designed	LMW	DIST	FED REG	FEDERAL AID PROJECT #				HIGHWAY
Checked	BHS	15	6	CD 2452-01-035				LP1604
Drawn	KWA	COUNTY			CONTROL	SECT	JOB	SHEET
Checked	BHS	BEXAR			2452	01	035	119

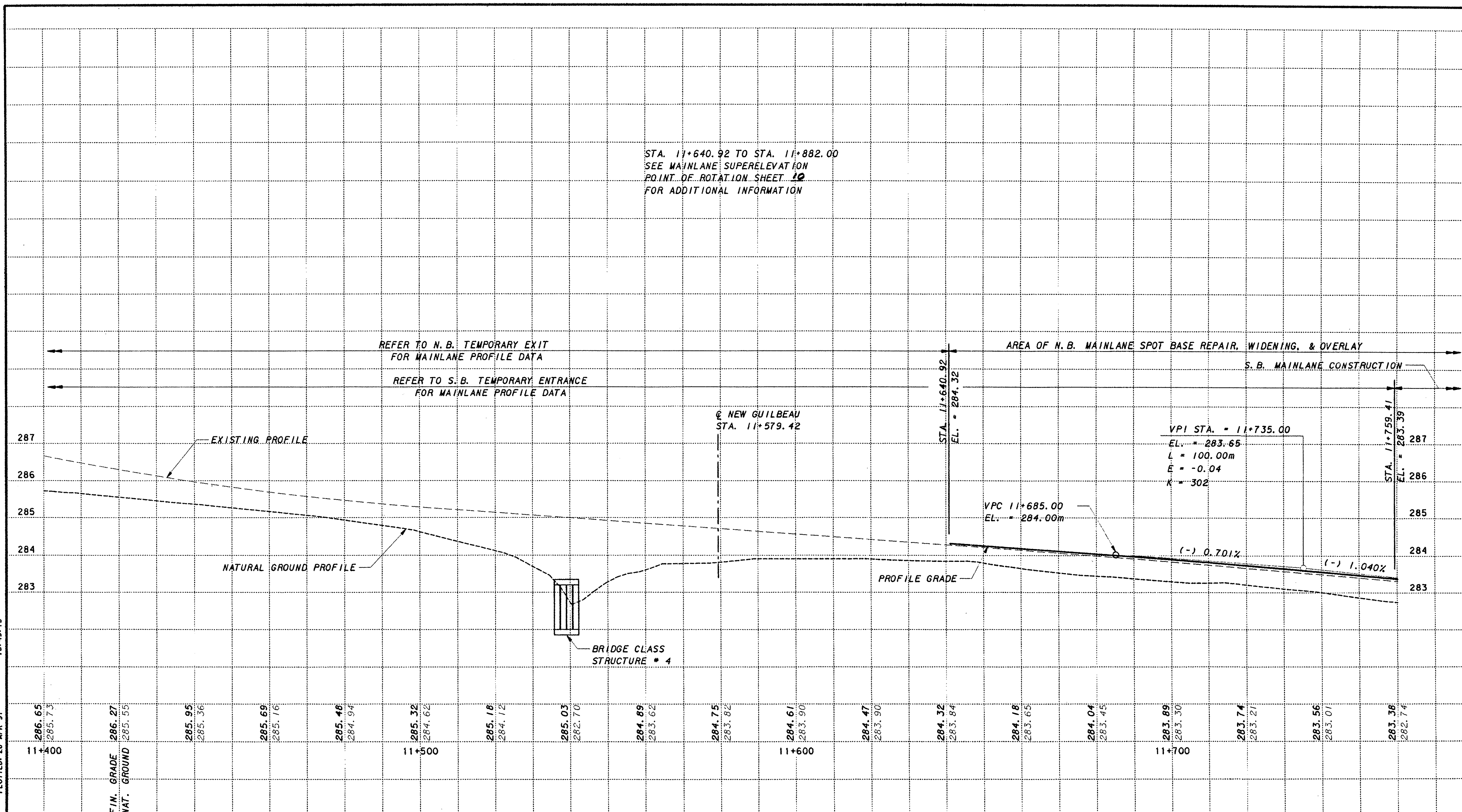

PLOTTED: 28 APR 97 10:49:15

FILENAME: G:\67316-03\604RVP05.dgn

LEVELS DISPLAYED

1	2	3	4	5	6	7	8	9	10	11	12	13	14	15	16
17	18	19	20	21	22	23	24	25	26	27	28	29	30	31	32
33	34	35	36	37	38	39	40	41	42	43	44	45	46	47	48
49	50	51	52	53	54	55	56	57	58	59	60	61	62	63	

SCALE: 1:100 V
1:1000 H

STATE OF TEXAS
R. H. SHELLABARGER
75927
REGISTERED
PROFESSIONAL ENGINEER

Texas Department of Transportation
LOOP 1604

MAINLANE PROFILE SHEET
STA. 11+400 TO STA. 11+760

SHEET 3 OF 11

Kimley-Horn and Associates, Inc.

Designed	LAW	DIST	FED REG	FEDERAL AID PROJECT #			HIGHWAY
Checked	BHS	15	6	CD 2452-01-035			LP1604
Drawn	KWA	COUNTY		CONTROL	SECT	JOB	SHEET
Checked	BHS	BEXAR		2452	01	035	120

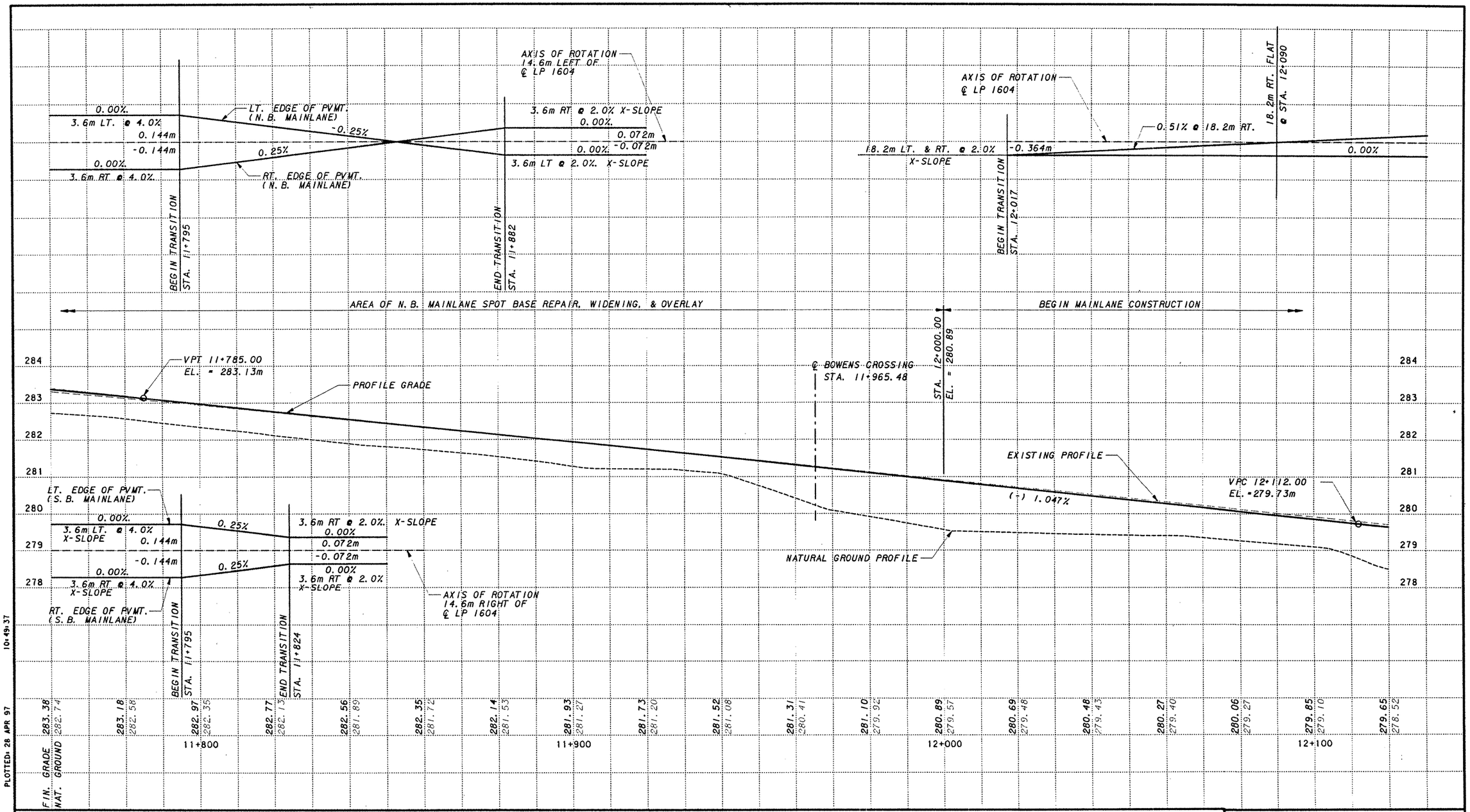

SCALE: 1:100 V
1:1000 H

STATE OF TEXAS
R. H. SHELLABARGER
75927
REGISTERED
PROFESSIONAL ENGINEER

Rebecca H. Shellabarger
2 May 97

Texas Department of Transportation
LOOP 1604

MAINLANE PROFILE SHEET
STA. 11+760 TO STA. 12+120

SHEET 4 OF 11

Kimley-Horn and Associates, Inc.

Designed	LMW	DIST	FED REG	FEDERAL AID PROJECT #				HIGHWAY
Checked	BHS	15	6	CD 2452-01-035				LP1604
Drawn	KWA	COUNTY			CONTROL	SECT	JOB	SHEET
Checked	BHS	BEXAR			2452	01	035	121

LEVELS DISPLAYED

1	2	3	4	5	6	7	8	9	10	11	12	13	14	15	16	17	18	19	20	21	22	23	24	25	26	27	28	29	30	31	32
33	34	35	36	37	38	39	40	41	42	43	44	45	46	47	48	49	50	51	52	53	54	55	56	57		59	60	61	62	63	

FILENAME: G:\67316-03\604RVP06.dgn PLOTTED: 28 APR 97 10:49:37

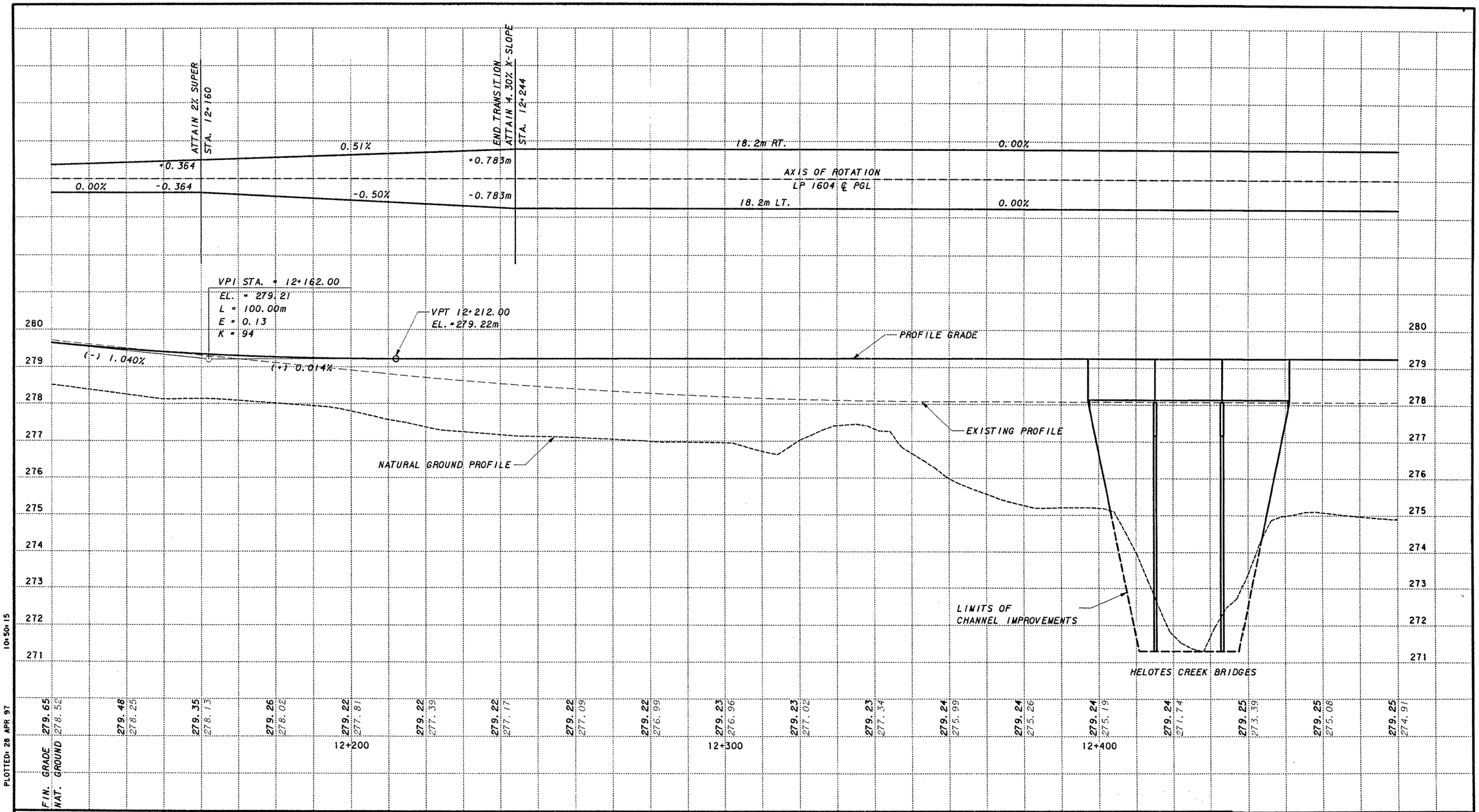

PLOTTED: 28 APR 97 10:50:15

FILENAME: G:\67316-03\604RVP07.dgn

LEVELS DISPLAYED

1	2	3	4	5	6	7	8	9	10	11	12	13	14	15	16	17	18	19	20	21	22	23	24	25	26	27	28	29	30	31	32
33	34	35	36	37	38	39	40	41	42	43	44	45	46	47	48	49	50	51	52	53	54	55	56	57	58	59	60	61	62	63	

SCALE: 1:100 V
1:1000 H

STATE OF TEXAS
R. H. SHELLABARGER
75927
REGISTERED
PROFESSIONAL ENGINEER

Rebecca H. Shellabarger
2 May 97

Texas Department of Transportation
LOOP 1604

MAINLANE PROFILE SHEET
STA. 12+120 TO STA. 12+480

SHEET 5 OF 11

Kimley-Horn and Associates, Inc.

Designed	LMW	DIST	FED REG	FEDERAL AID PROJECT #				HIGHWAY
Checked	BHS	15	6	CD 2452-01-035				LP1604
Drawn	KWA	COUNTY			CONTROL	SECT	JOB	SHEET
Checked	BHS	BEXAR			2452	01	035	122

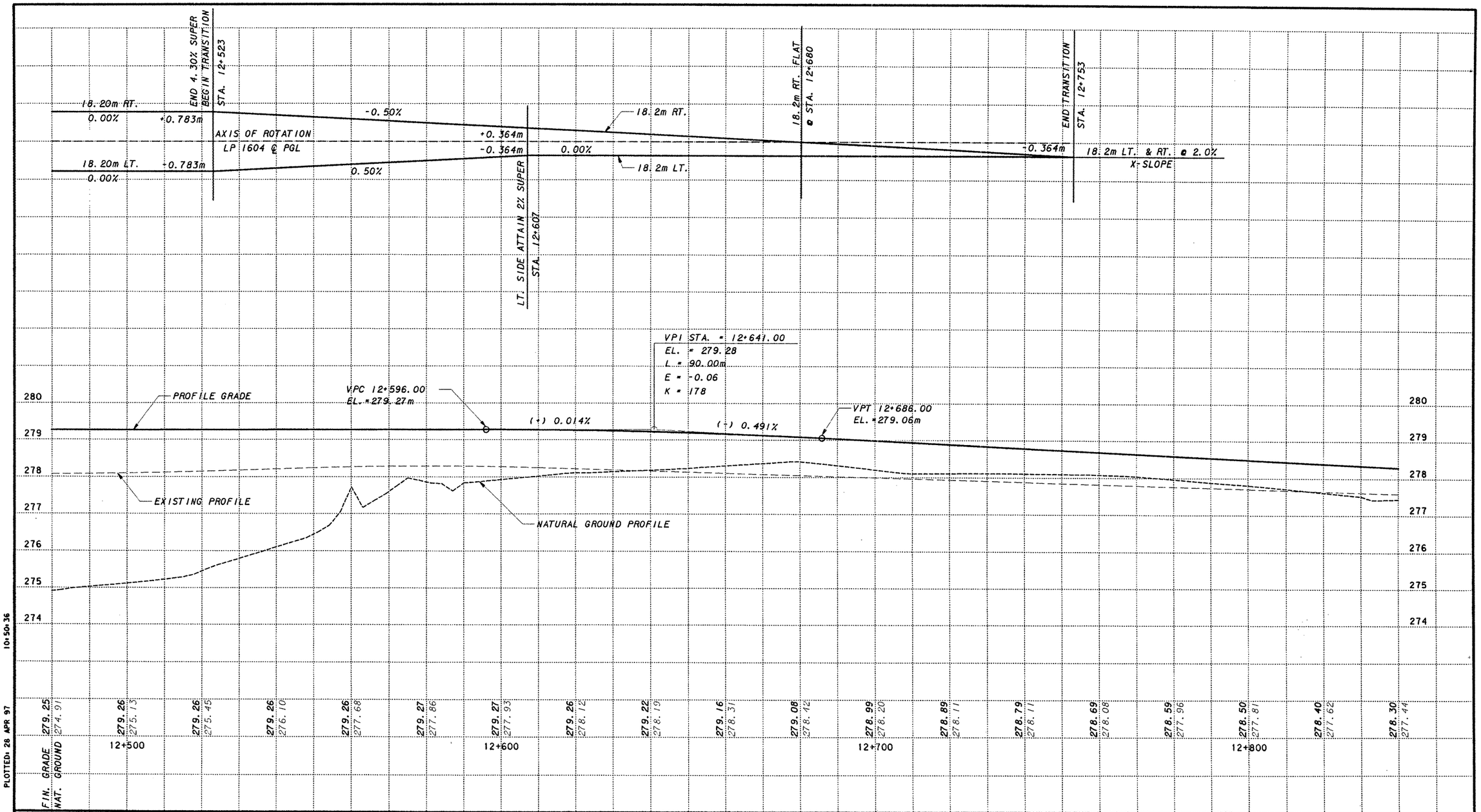

PLOTTED: 28 APR 97 10:50:36

FILENAME: G:\67316-03\604RVP08.dgn

LEVELS DISPLAYED

1	2	3	4	5	6	7	8	9	10	11	12	13	14	15	16																
17	18	19	20	21	22	23	24	25	26	27	28	29	30	31	32																
33	34	35	36	37	38	39	40	41	42	43	44	45	46	47	48																
49	50	51	52	53	54	55	56	57	58	59	60	61	62	63																	

SCALE: 1:100 V
1:1000 H

STATE OF TEXAS
R. H. SHELLABARGER
75927
REGISTERED
PROFESSIONAL ENGINEER

Rebecca H. Shellabarger
2 May 97

Texas Department of Transportation
LOOP 1604

MAINLANE PROFILE SHEET
STA. 12+480 TO STA. 12+840

SHEET 6 OF 11

Kimley-Horn and Associates, Inc.

Designed	LMW	DIST	FED REG	FEDERAL AID PROJECT #				HIGHWAY
Checked	BHS	15	6	CD 2452-01-035				LP1604
Drawn	KWA	COUNTY			CONTROL	SECT	JOB	SHEET
Checked	BHS	BEXAR			2452	01	035	123

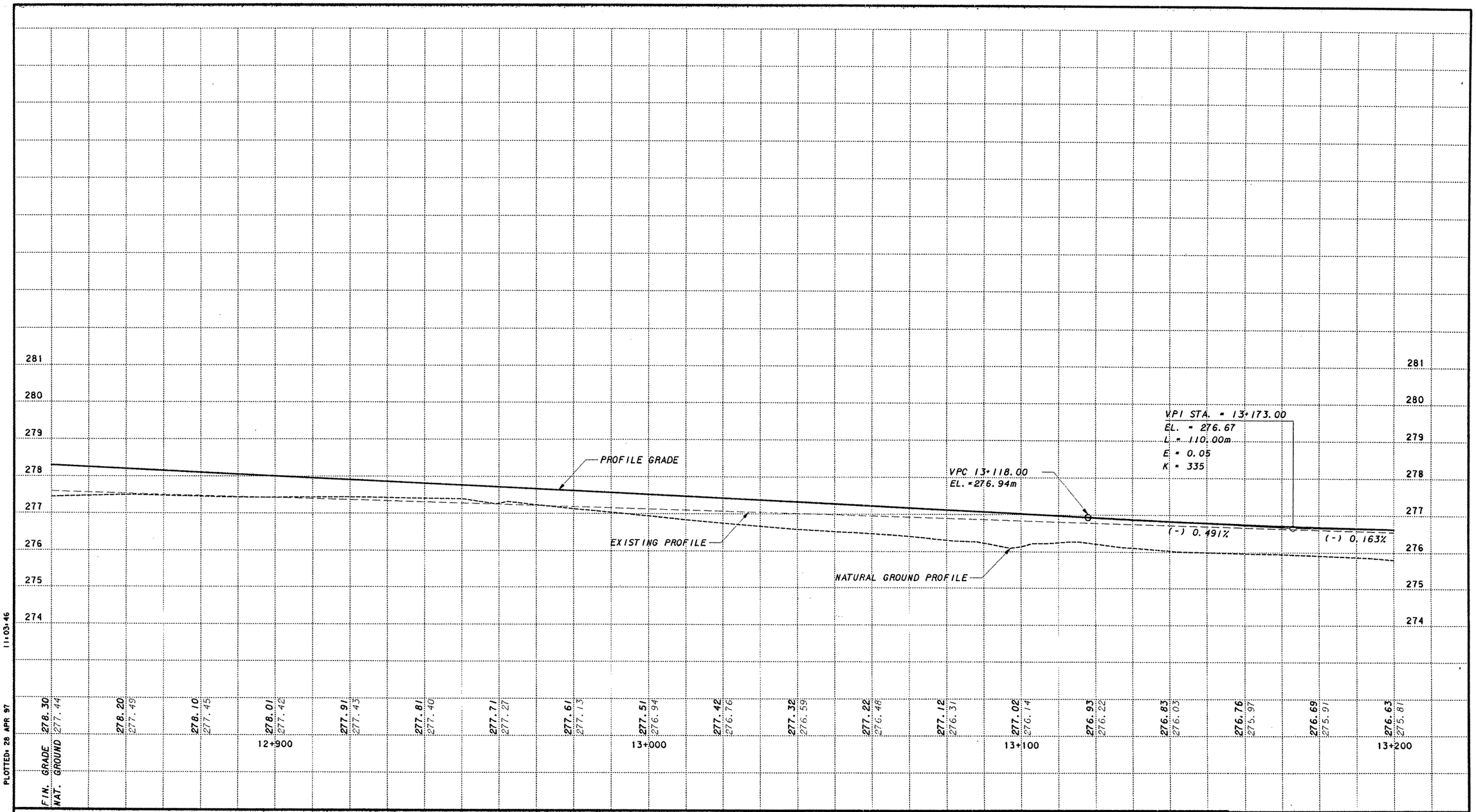

PLOTTED: 28 APR 97 11:03:46

FILENAME: G:\67316-03\604RVP09.dgn

LEVELS DISPLAYED																
1	2	3	4	5	6	7	8	9	10	11	12	13	14	15	16
17	18	19	20	21	22	23	24	25	26	27	28	29	30	31	32
33	34	35	36	37	38	39	40	41	42	43	44	45	46	47	48
49	50	51	52	53	54	55	56	57	58	59	60	61	62	63	

SCALE: 1:100 V
1:1000 H

STATE OF TEXAS
R. H. SHELLABARGER
75927
REGISTERED PROFESSIONAL ENGINEER

Texas Department of Transportation
LOOP 1604

MAINLANE PROFILE SHEET
STA. 12+840 TO STA. 13+200

SHEET 7 OF 11

Kimley-Horn and Associates, Inc.

Designed	LMW	DIST	FED REG	FEDERAL AID PROJECT *				HIGHWAY
Checked	BHS	15	6	CD 2452-01-035				LP1604
Drawn	KWA	COUNTY			CONTROL	SECT	JOB	SHEET
Checked	BHS	BEXAR			2452	01	035	124

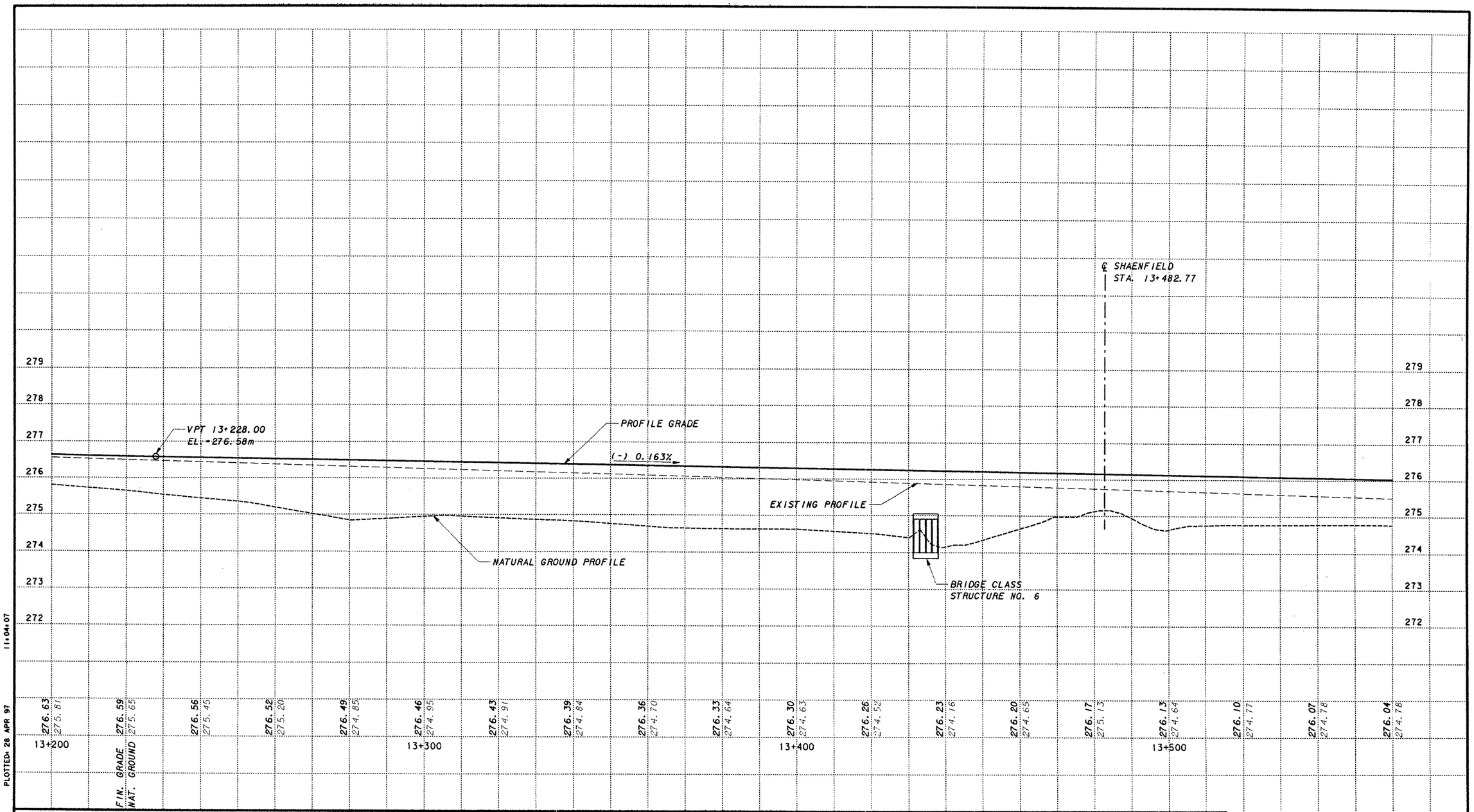

SCALE: 1:100 V
1:1000 H

STATE OF TEXAS
R. H. SHELLABARGER
75927
REGISTERED
PROFESSIONAL ENGINEER

Texas Department of Transportation
LOOP 1604

PROPOSED PROFILE SHEET
STA. 13+200 TO STA. 13+560

SHEET 8 OF 11

Kimley-Horn and Associates, Inc.

Designed	LMW	DIST	FED REG	FEDERAL AID PROJECT #				HIGHWAY
Checked	BHS	15	6	CD 2452-01-035				LP1604
Drawn	KWA	COUNTY			CONTROL	SECT	JOB	SHEET
Checked	BHS	BEXAR			2452	01	035	125

FILENAME: G:\67316-03\604RVP10.dgn PLOTTED: 28 APR 97 11:04:07

LEVELS DISPLAYED

1	2	3	4	5	6	7	8	9	10	11	12	13	14	15	16																
17	18	19	20	21	22	23	24	25	26	27	28	29	30	31	32																
33	34	35	36	37	38	39	40	41	42	43	44	45	46	47	48																
49	50	51	52	53	54	55	56	57	58	59	60	61	62	63																	

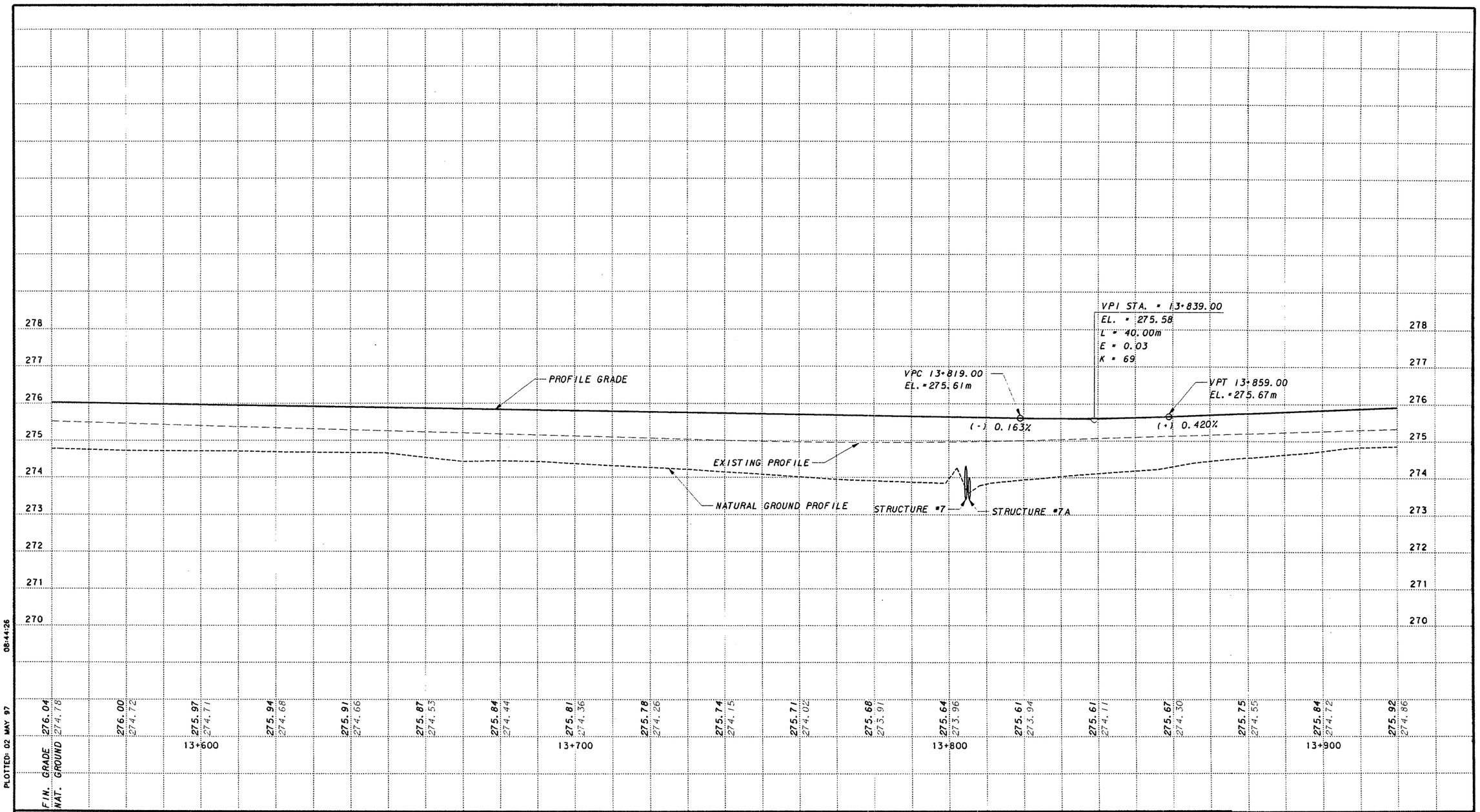

PLOTTED: 02 MAY 97 08:44:26

FILENAME: g:\67316-03\604rvp11.dgn

LEVELS DISPLAYED															
1	2	3	4	5	6	7	8	9	10	11	12	13	14	15	16
17	18	19	20	21	22	23	24	25	26	27	28	29	30	31	32
33	34	35	36	37	38	39	40	41	42	43	44	45	46	47	48
49	50	51	52	53	54	55	56	57	58	59	60	61	62	63	

SCALE: 1:100 V
1:1000 H

STATE OF TEXAS
R. H. SHELLABARGER
75927
REGISTERED
PROFESSIONAL ENGINEER

Rebecca Shellabarger
2 May 97

Texas Department of Transportation
LOOP 1604

MAINLANE PROFILE SHEET
STA. 13+560 TO STA. 13+920

SHEET 9 OF 11

Kimley-Horn and Associates, Inc.

Designed	LMW	DIST	FED REG	FEDERAL AID PROJECT				HIGHWAY
Checked	BHS	15	6	CD 2452-01-035				LP1604
Drawn	KWA	COUNTY			CONTROL	SECT	JOB	SHEET
Checked	BHS	BEXAR			2452	01	035	126

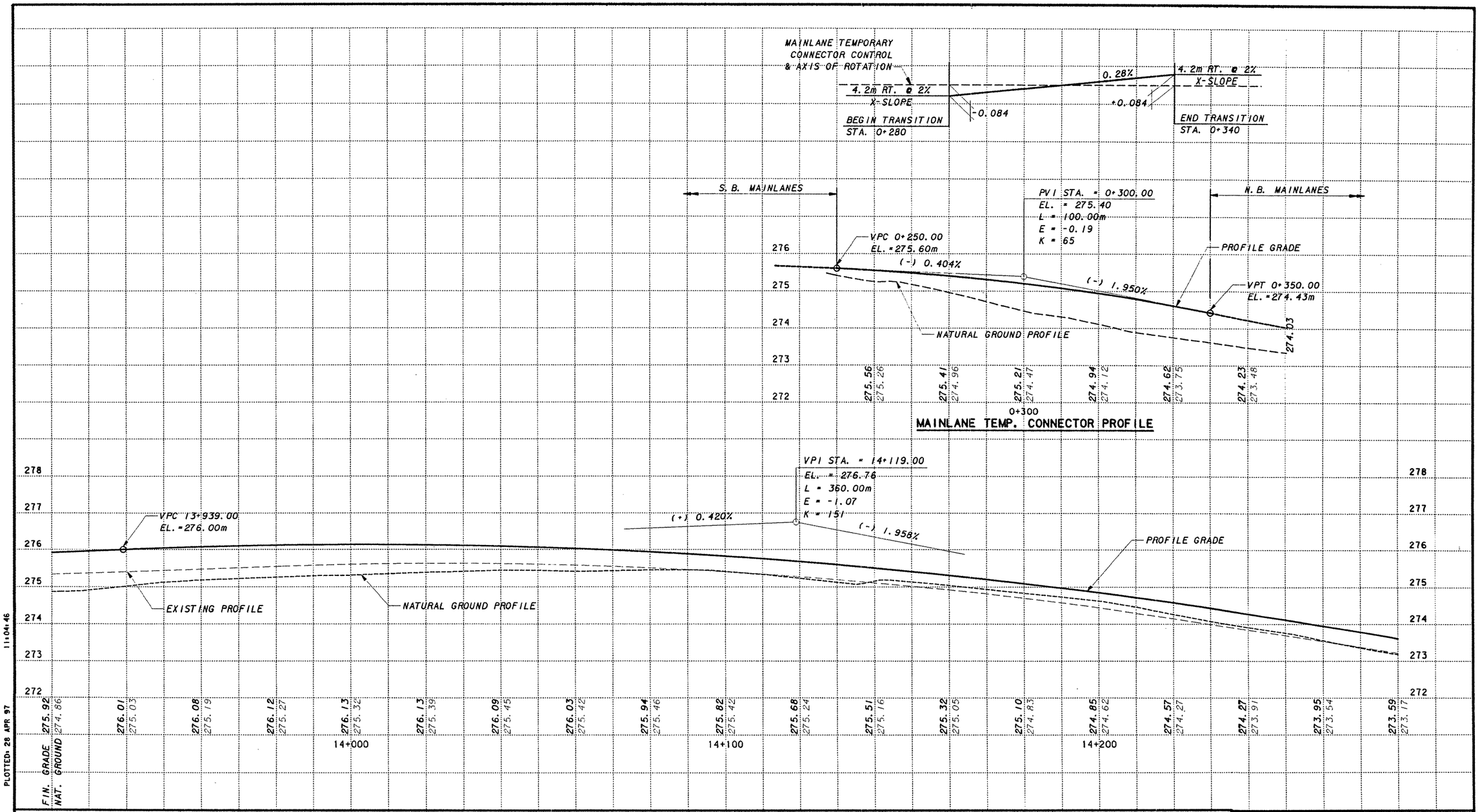

SCALE: 1:100 V
1:1000 H

STATE OF TEXAS
R. H. SHELLABARGER
75927
REGISTERED PROFESSIONAL ENGINEER

Texas Department of Transportation
LOOP 1604

MAINLANE PROFILE SHEET
STA. 13+920 TO STA. 14+280

SHEET 10 OF 11

Kimley-Horn and Associates, Inc.

Designed	LMW	DIST	FED REG	FEDERAL AID PROJECT #				HIGHWAY
Checked	BWS	15	6	CD 2452-01-035				LP1604
Drawn	KWA	COUNTY			CONTROL	SECT	JOB	SHEET
Checked	BWS	BEXAR			2452	01	035	127

LEVELS DISPLAYED

1	2	3	4	5	6	7	8	9	10	11	12	13	14	15	16	
17	18	19	20	21	22	23	24	25	26	27	28	29	30	31	32	
33	34	35	36	37	38	39	40	41	42	43	44	45	46	47	48	
49	50	51	52	53	54	55	56	57	58	59	60	61	62	63		

FILENAME: G:\67316-03\604RVP12.dgn

PLOTTED: 28 APR 97 11:04:46

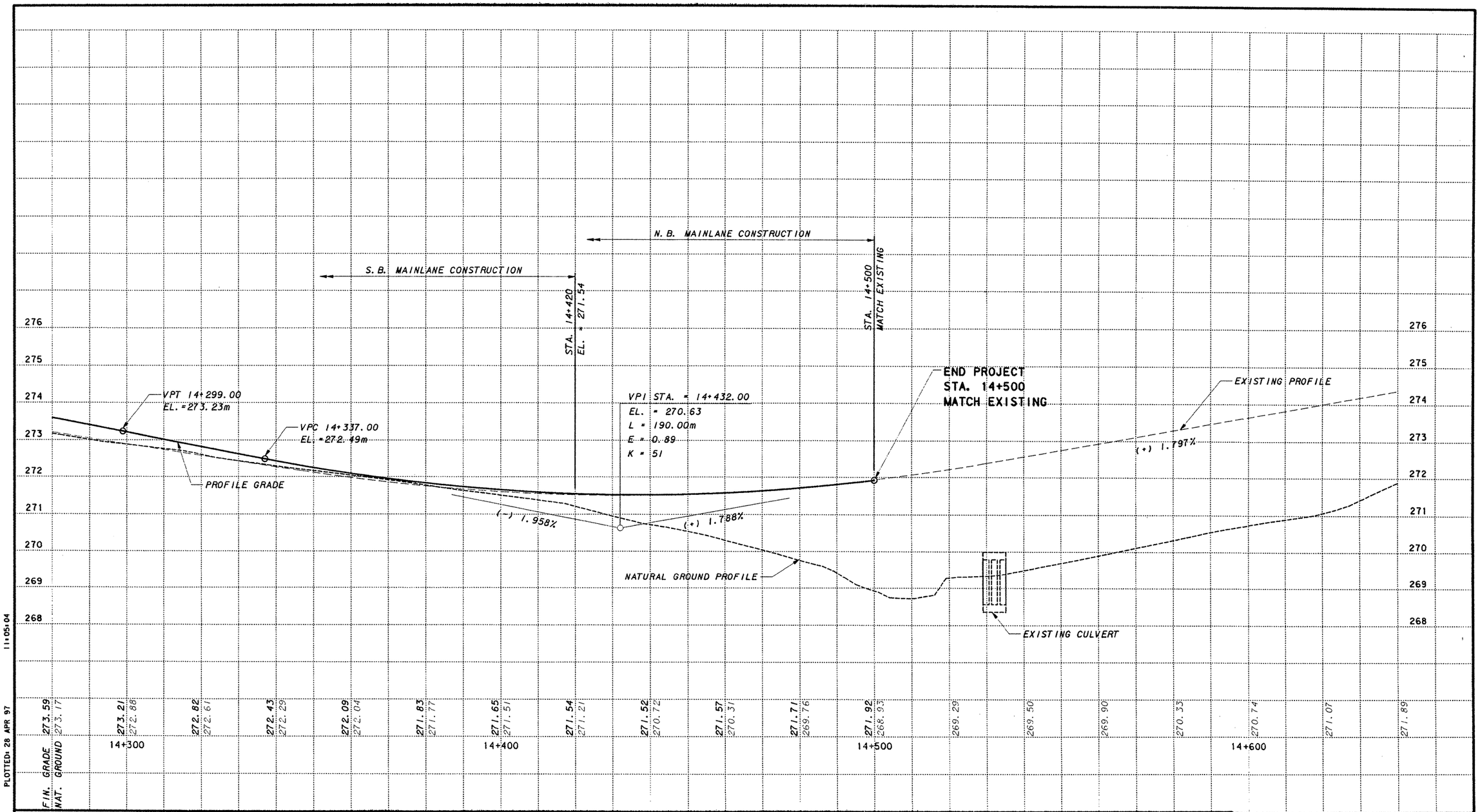

SCALE: 1:100 V
1:1000 H

STATE OF TEXAS
C. H. SHELLABARGER
75921
REGISTERED
PROFESSIONAL ENGINEER

Rebecca A. Shellabarger
2 May 97

Texas Department of Transportation
LOOP 1604

MAINLANE PROFILE SHEET
STA. 14+280 TO END PROJECT

SHEET 11 OF 11

Kimley-Horn and Associates, Inc.

Designed	LMW	DIST	FED REG	FEDERAL AID PROJECT #			HIGHWAY
Checked	BHS	15	6	CD 2452-01-035			LP1604
Drawn	KWA	COUNTY		CONTROL	SECT	JOB	SHEET
Checked	BHS	BEXAR		2452	01	035	128

FILENAME: G:\67316-03\604RVP13.dgn
PLOTTED: 28 APR 97 11:05:04

LEVELS DISPLAYED
1 2 3 4 5 6 7 8 9 10 11 12 13 14 15 16
17 18 19 20 21 22 23 24 25 26 27 28 29 30 31 32
33 34 35 36 37 38 39 40 41 42 43 44 45 46 47 48
49 50 51 52 53 54 55 56 57 58 59 60 61 62 63

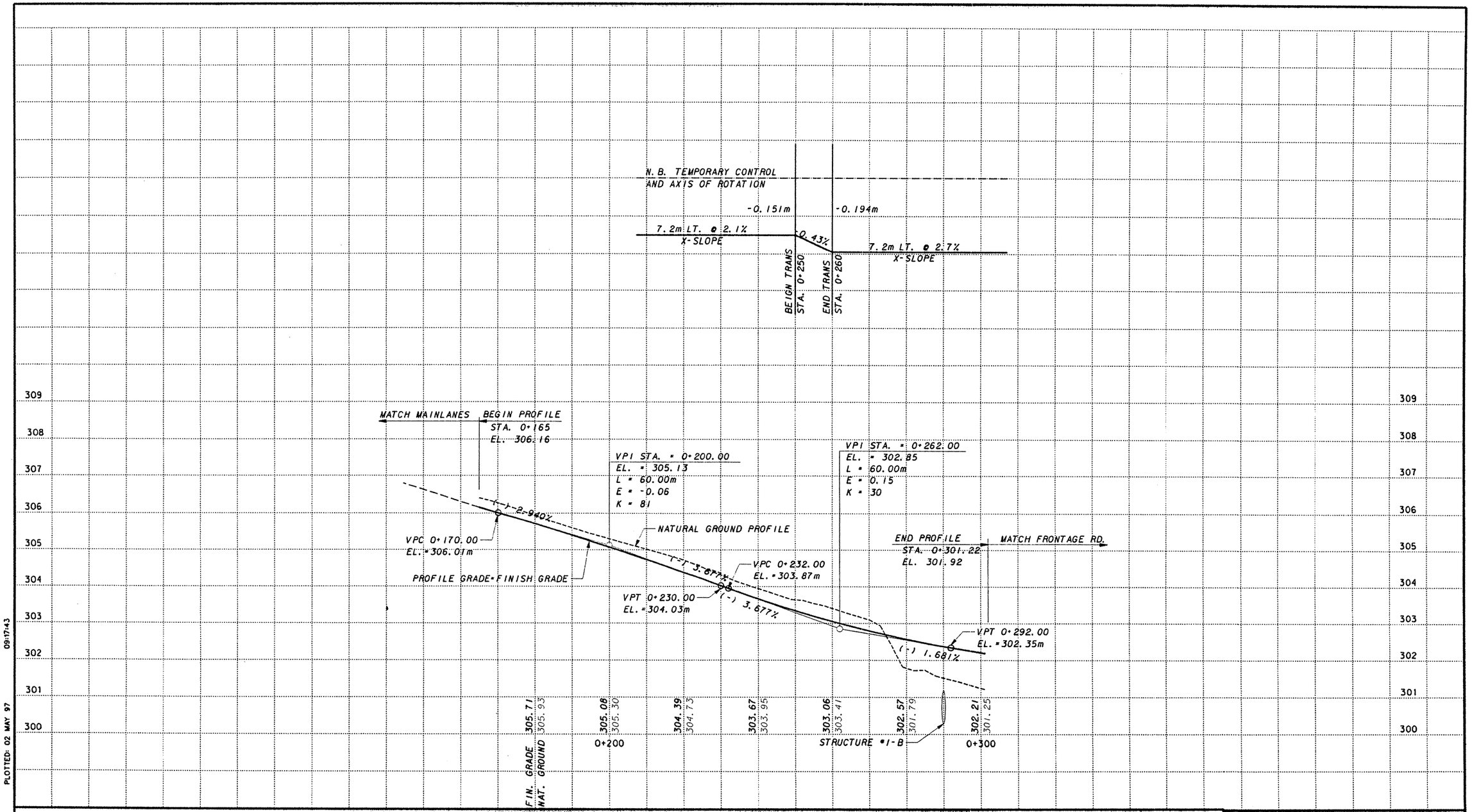

SCALE: 1:100 V
1:1000 H

STATE OF TEXAS
R. H. SHELLABARGER
75927
REGISTERED
PROFESSIONAL ENGINEER

Texas Department of Transportation
LOOP 1604

N. B. TEMPORARY ENTRANCE PROFILE

STA. 0+165 TO STA. 0+301.22

SHEET 1 OF 1

Kimley-Horn and Associates, Inc.

Designed LMW	DIST	FED REG	FEDERAL AID PROJECT #				HIGHWAY
Checked BHS	15	6	CD 2452-01-035				LP1604
Drawn LMW	COUNTY			CONTROL	SECT	JOB	SHEET
Checked BHS	BEXAR			2452	01	035	124

PLOTTED: 02 MAY 97 09:17:43

FILENAME: g:\67316-03\eentryp.dgn

LEVELS DISPLAYED

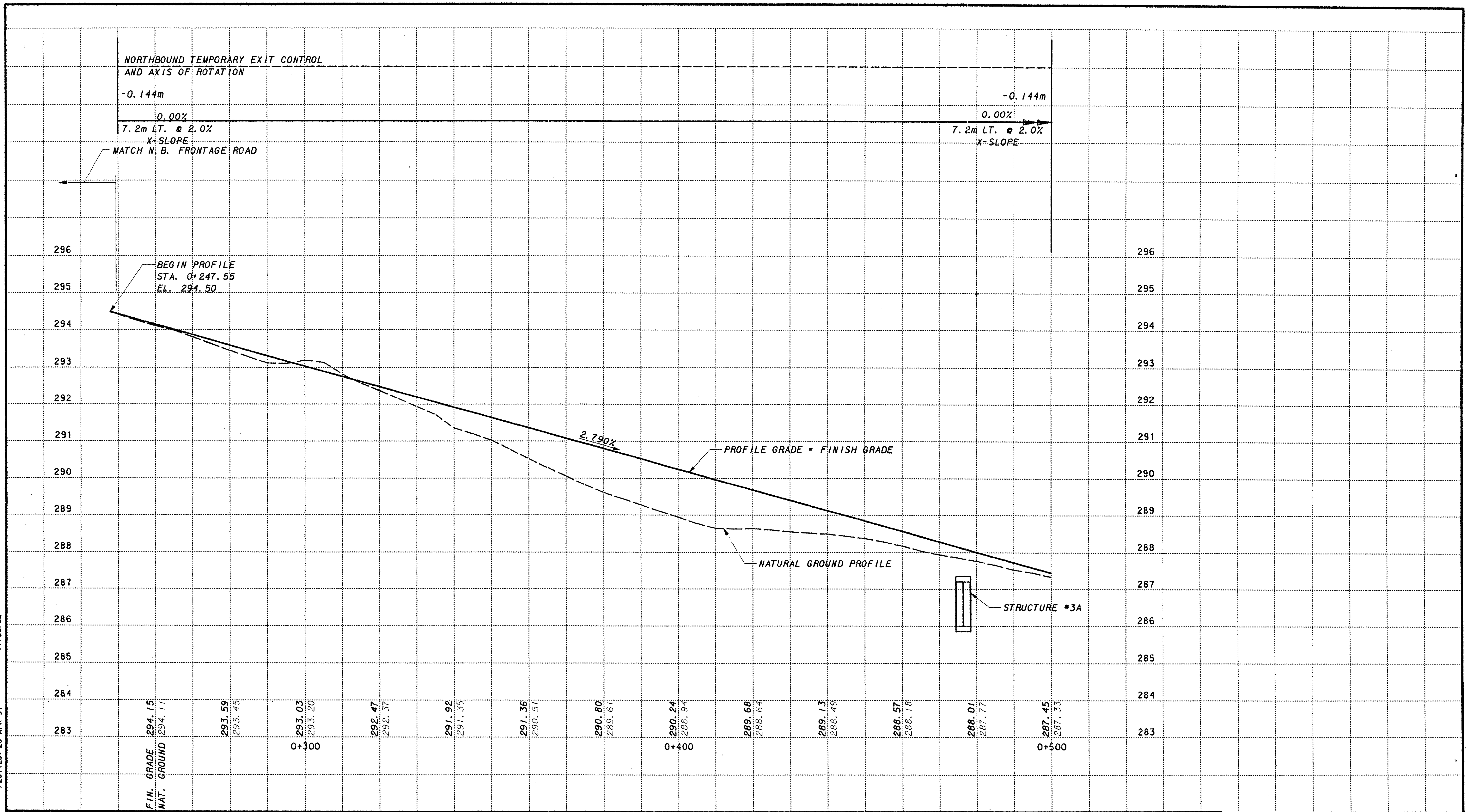

PLOTTED: 28 APR 97 11:08:02

FILENAME: G:\67316-03\EEXTRVP1.dgn

LEVELS DISPLAYED															
1	2	3	4	5	6	7	8	9	10	11	12	13	14	15	16
17	18	19	20	21	22	23	24	25	26	27	28	29	30	31	32
33	34	35	36	37	38	39	40	41	42	43	44	45	46	47	48
49	50	51	52	53	54	55	56	57	58	59	60	61	62	63	

SCALE: 1:100 V
1:1000 H

STATE OF TEXAS
R. H. SHELLABARGER
75927
REGISTERED PROFESSIONAL ENGINEER

Rebecca Shellabarger
2 May 97

Texas Department of Transportation
LOOP 1604

N.B. TEMPORARY EXIT PROFILE

STA. 0+247.55 TO STA. 0+500

SHEET 1 OF 2

Kimley-Horn and Associates, Inc.

Designed	LMW	DIST	FED REG	FEDERAL AID PROJECT #			HIGHWAY
Checked	BHS	15	6	CD 2452-01-035			LP1604
Drawn	LMW	COUNTY		CONTROL	SECT	JOB	SHEET
Checked	BHS	BEXAR		2452	01	035	130

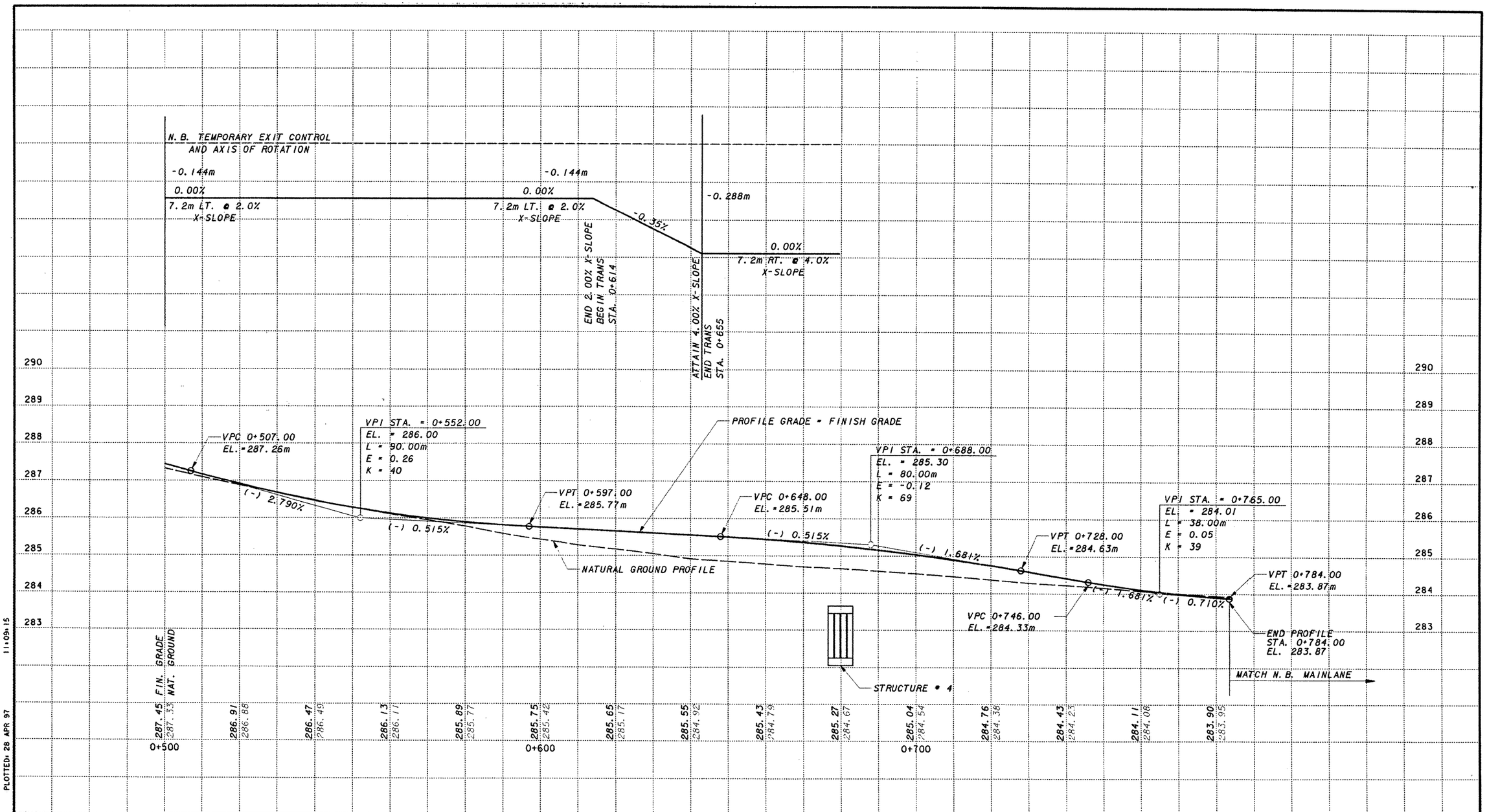

SCALE: 1:100 V
1:1000 H

STATE OF TEXAS
R. H. SHELLABARGER
75927
REGISTERED
PROFESSIONAL ENGINEER

Rebecca H. Shellabarger
7 May 97

Texas Department of Transportation
LOOP 1604

N. B. TEMPORARY EXIT PROFILE

STA. 0+500 TO STA. 0+784

SHEET 2 OF 2

Kimley-Horn and Associates, Inc.

Designed	LMW	DIST	FED REG	FEDERAL AID PROJECT #				HIGHWAY
Checked	BHS	15	6	CD 2452-01-035				LP1604
Drawn	LMW	COUNTY			CONTROL	SECT	JOB	SHEET
Checked	BHS	BEXAR			2452	01	035	131

LEVELS DISPLAYED

1	2	3	4	5	6	7	8	9	10	11	12	13	14	15	16
17	18	19	20	21	22	23	24	25	26	27	28	29	30	31	32
33	34	35	36	37	38	39	40	41	42	43	44	45	46	47	48
49	50	51	52	53	54	55	56	57	58	59	60	61	62	63	

FILENAME: G:\67316-03\EXTRVP2.dgn PLOTTED: 28 APR 97 11:09:15

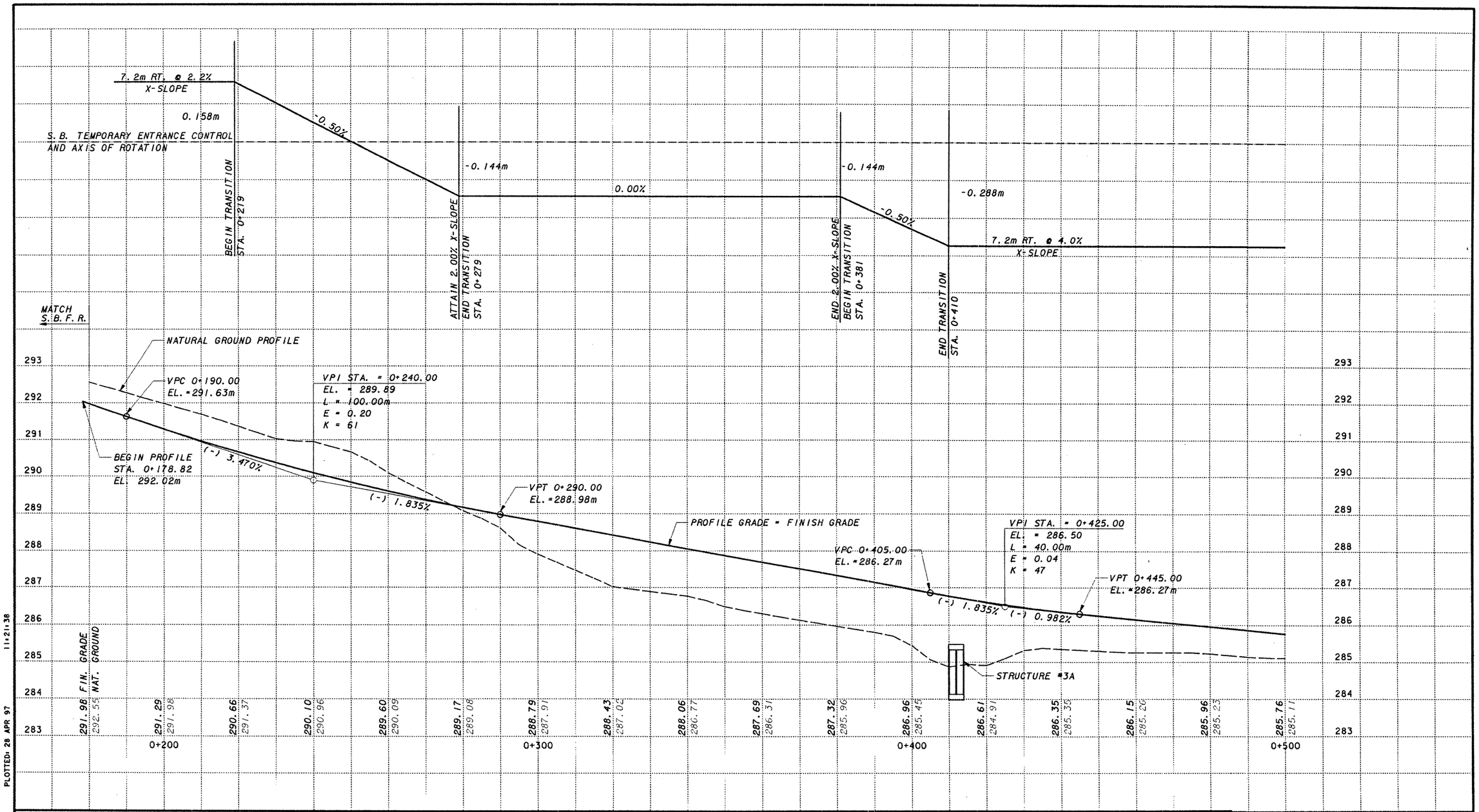

SCALE: 1:100 V
1:1000 H

STATE OF TEXAS
R. H. SHELLABARGER
75927
REGISTERED
PROFESSIONAL ENGINEER

Texas Department of Transportation
LOOP 1604

S.B. TEMPORARY ENTRANCE PROFILE

STA. 0+178.82 TO STA. 0+500

SHEET 1 OF 2

Kimley-Horn and Associates, Inc.

Designed LMW	DIST	FED REG	FEDERAL AID PROJECT *			HIGHWAY
Checked BHS	15	6	CD 2452-01-035			LP1604
Drawn LMW	COUNTY		CONTROL	SECT	JOB	SHEET
Checked BHS	BEXAR		2452	01	035	132

PLOTTED: 28 APR 97 11:21:38

FILENAME: G:\67316-03\STCRVP02.dgn

LEVELS DISPLAYED

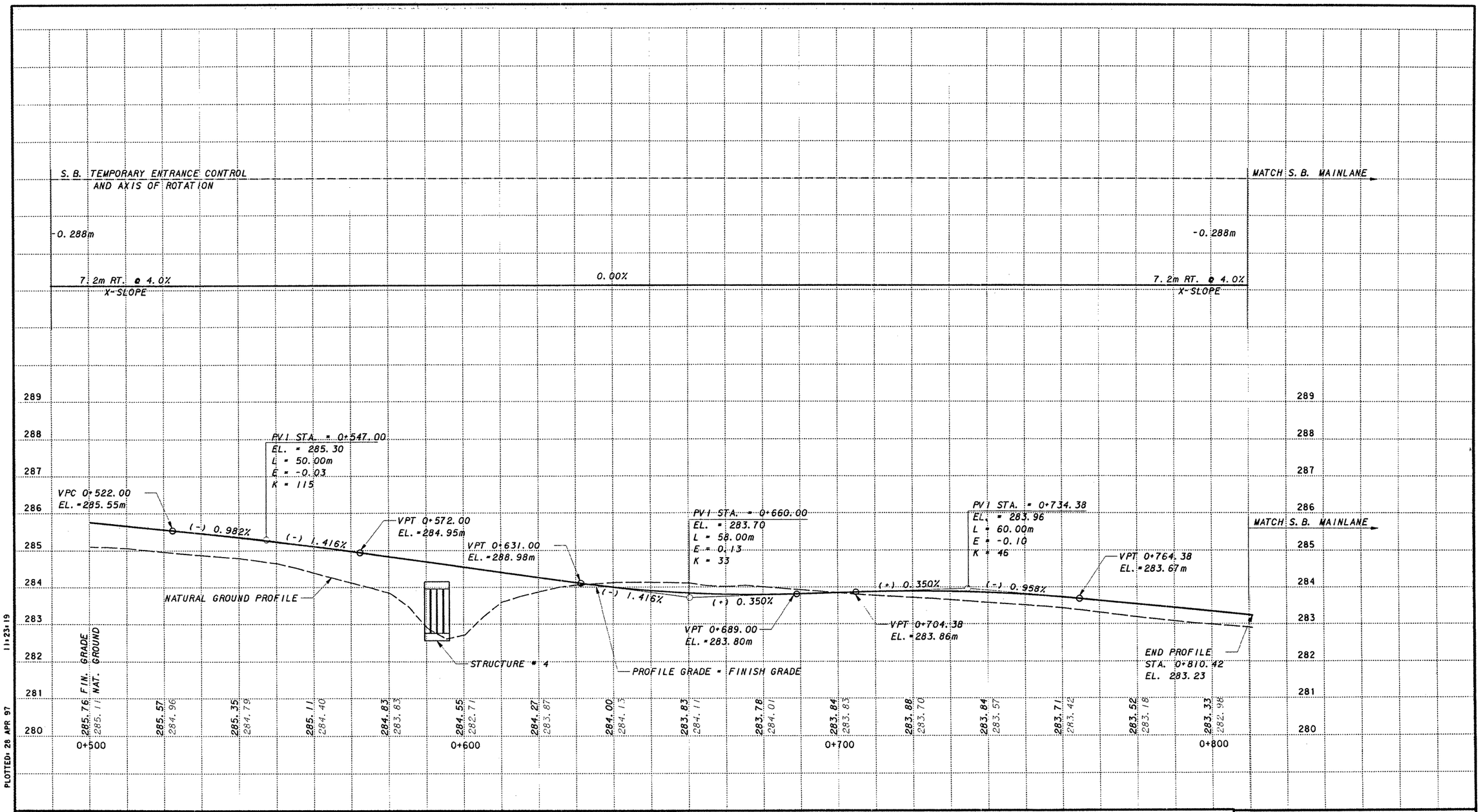

SCALE: 1:100 V
1:1000 H

STATE OF TEXAS
R. H. SHELLABARGER
75927
REGISTERED
PROFESSIONAL ENGINEER

Texas Department of Transportation
LOOP 1604

S. B. TEMPORARY ENTRANCE PROFILE

STA. 0+500 TO STA. 0+810.42

SHEET 2 OF 2

Kimley-Horn and Associates, Inc.

Designed	LMW	DIST	FED REG	FEDERAL AID PROJECT #			HIGHWAY
Checked	BHS	15	6	CD 2452-01-035			LP1604
Drawn	LMW	COUNTY		CONTROL	SECT	JOB	SHEET
Checked	BHS	BEXAR		2452	01	035	133

PLOTTED: 28 APR 97 11:23:19

FILENAME: G:\67316-03\STCRVP2A.dgn

LEVELS DISPLAYED

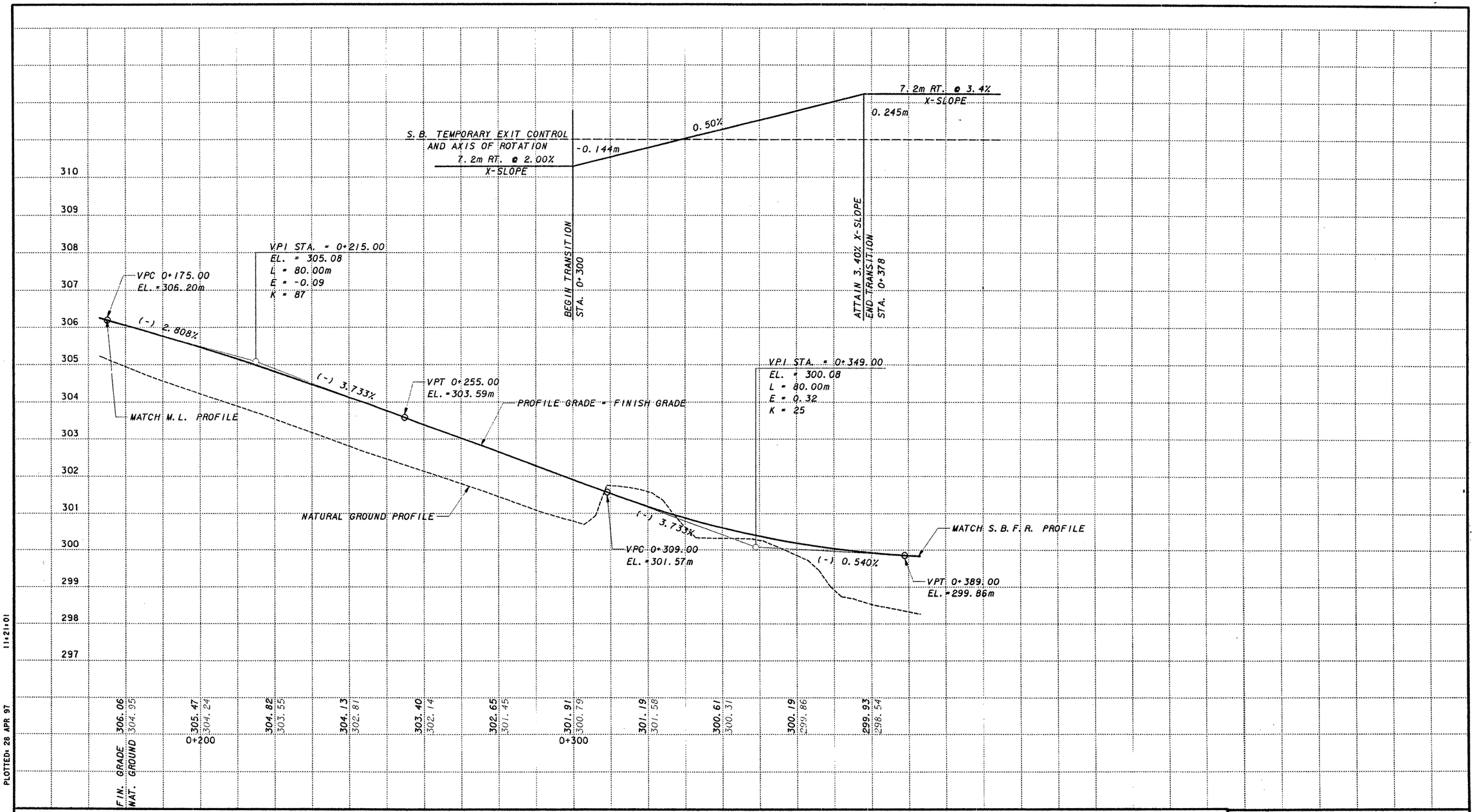

PLOTTED: 28 APR 97 11:21:01

FILENAME: G:\67316-03\STCRVP01.dgn

LEVELS DISPLAYED																																	
1	2	3	4	5	6	7	8	9	10	11	12	13	14	15	16																		
17	18	19	20	21	22	23	24	25	26	27	28	29	30	31	32																		
33	34	35	36	37	38	39	40	41	42	43	44	45	46	47	48																		
49	50	51	52	53	54	55	56	57	58	59	60	61	62	63																			

SCALE: 1:100 V
1:1000 H

STATE OF TEXAS
R. H. SHELLABARGER
75927
REGISTERED
PROFESSIONAL ENGINEER

Rebecca Shellabarger
2 May 97

Texas Department of Transportation
LOOP 1604

S.B. TEMPORARY EXIT PROFILE

STA. 0+173 TO STA. 0+393.13

SHEET 1 OF 1

Kimley-Horn and Associates, Inc.

Designed	LMW	DIST	FED REG	FEDERAL AID PROJECT #					HIGHWAY
Checked	BHS	15	6	CD 2452-01-035					LP1604
Drawn	LMW	COUNTY			CONTROL	SECT	JOB		SHEET
Checked	BHS	BEXAR			2452	01	035		134

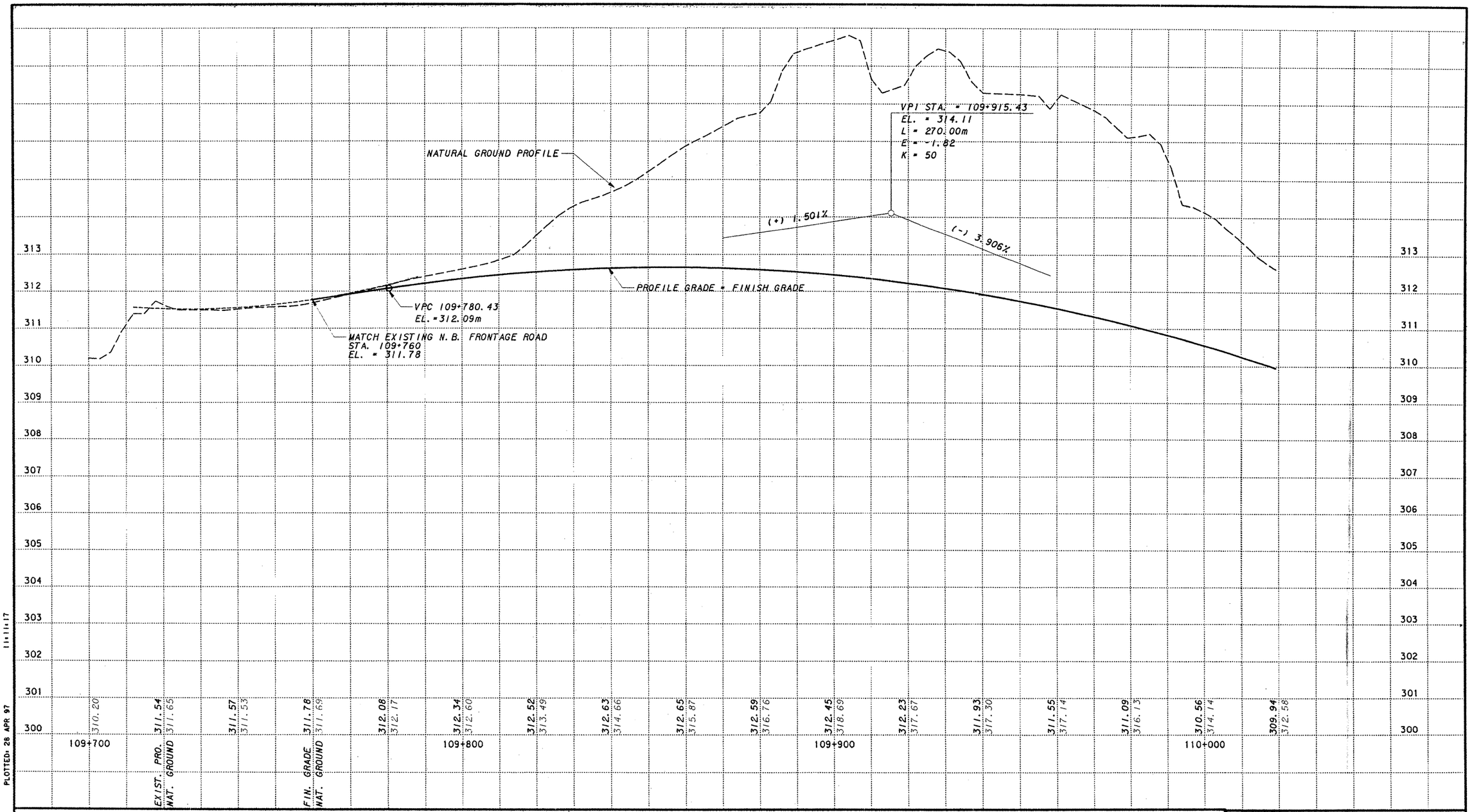

PLOTTED: 28 APR 97 11:11:17

FILENAME: G:\67316-03\NFRRVP01.dgn

LEVELS DISPLAYED

1	2	3	4	5	6	7	8	9	10	11	12	13	14	15	16	17	18	19	20	21	22	23	24	25	26	27	28	29	30	31	32
33	34	35	36	37	38	39	40	41	42	43	44	45	46	47	48	49	50	51	52	53	54	55	56	57	58	59	60	61	62	63	64

SCALE: 1:100 V
1:1000 H

STATE OF TEXAS
R. K. SHELLABARGER
75927
REGISTERED
PROFESSIONAL ENGINEER

Rebecca K. Shellabarger
2 May 97

Texas Department of Transportation
LOOP 1604

N.B. FRONTAGE ROAD PROFILE

STA. 109+760 TO STA. 110+020

SHEET 1 OF 4

Kimley-Horn and Associates, Inc.

Designed	LMW	DIST	FED REG	FEDERAL AID PROJECT #					HIGHWAY
Checked	BHS	15	6	CD 2452-01-035					LP1604
Drawn	LMW	COUNTY			CONTROL	SECT	JOB		SHEET
Checked	BHS	BEXAR			2452	01	035		135

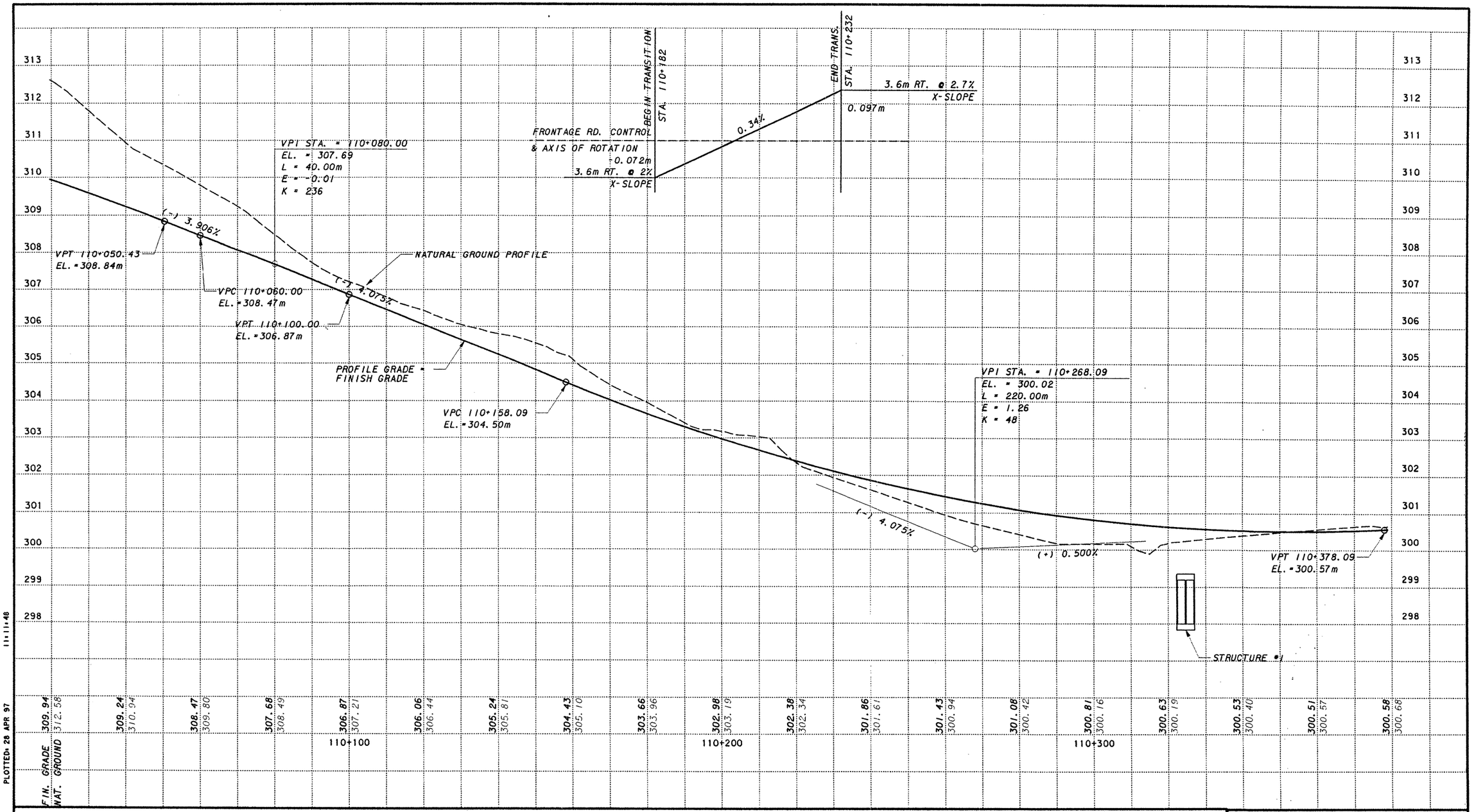

PLOTTED: 28 APR 97 11:11:48

FILENAME: G:\67316-03\NFRRVP02.dgn

LEVELS DISPLAYED																																	
1	2	3	4	5	6	7	8	9	10	11	12	13	14	15	16	17	18	19	20	21	22	23	24	25	26	27	28	29	30	31	32	33	34
35	36	37	38	39	40	41	42	43	44	45	46	47	48	49	50	51	52	53	54	55	56	57	58	59	60	61	62	63					

SCALE: 1:100 V
1:1000 H

STATE OF TEXAS
R. H. SHELLABARGER
75927
REGISTERED
PROFESSIONAL ENGINEER

Rebecca Shellabarger
2 May 97

Texas Department of Transportation
LOOP 1604

N. B. FRONTAGE ROAD PROFILE
STA. 110+020 TO STA. 110+380

SHEET 2 OF 4

Kimley-Horn and Associates, Inc.

Designed LMW	DIST	FED REG	FEDERAL AID PROJECT #					HIGHWAY
Checked BHS	15	6	CD 2452-01-035					LP1604
Drawn LMW	COUNTY			CONTROL	SECT	JOB		SHEET
Checked BHS	BEXAR			2452	01	035		136

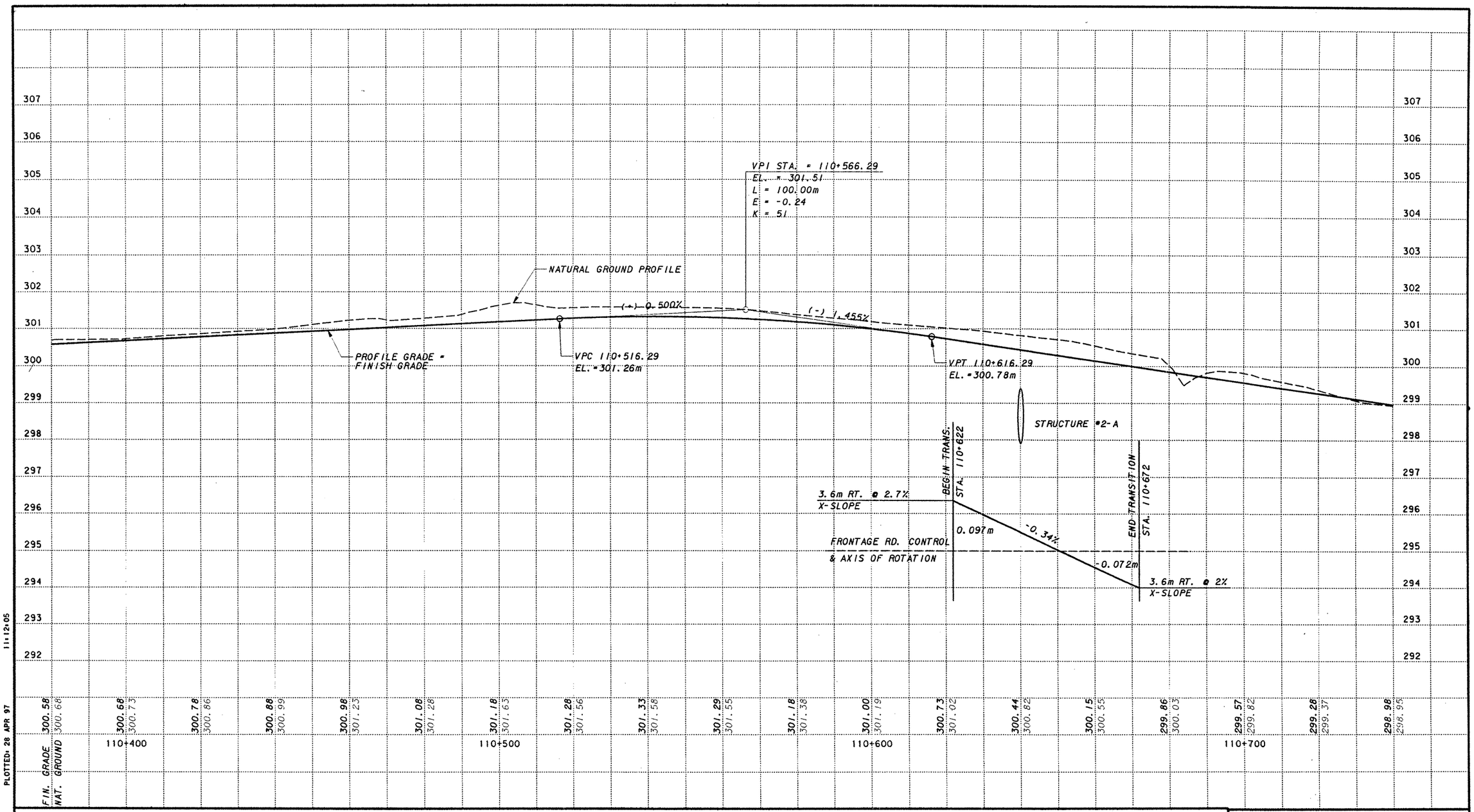

PLOTTED: 28 APR 97 11:12:05

FILENAME: G:\67316-03\WFRRVP03.dgn

LEVELS DISPLAYED															
1	2	3	4	5	6	7	8	9	10	11	12	13	14	15	16
17	18	19	20	21	22	23	24	25	26	27	28	29	30	31	32
33	34	35	36	37	38	39	40	41	42	43	44	45	46	47	48
49	50	51	52	53	54	55	56	57	58	59	60	61	62	63	

SCALE: 1:100 V
1:1000 H

STATE OF TEXAS
R. H. SHELLABARGER
75927
REGISTERED PROFESSIONAL ENGINEER

Rebecca Shellabarger
2 May 97

Texas Department of Transportation
LOOP 1604

N.B. FRONTAGE ROAD PROFILE

STA. 110+380 TO STA. 110+740

SHEET 3 OF 4

Kimley-Horn and Associates, Inc.

Designed	DIST	FED REG	FEDERAL AID PROJECT #			HIGHWAY
Checked	15	6	CD 2452-01-035			LP1604
Drawn	COUNTY		CONTROL	SECT	JOB	SHEET
Checked	BEXAR		2452	01	035	137

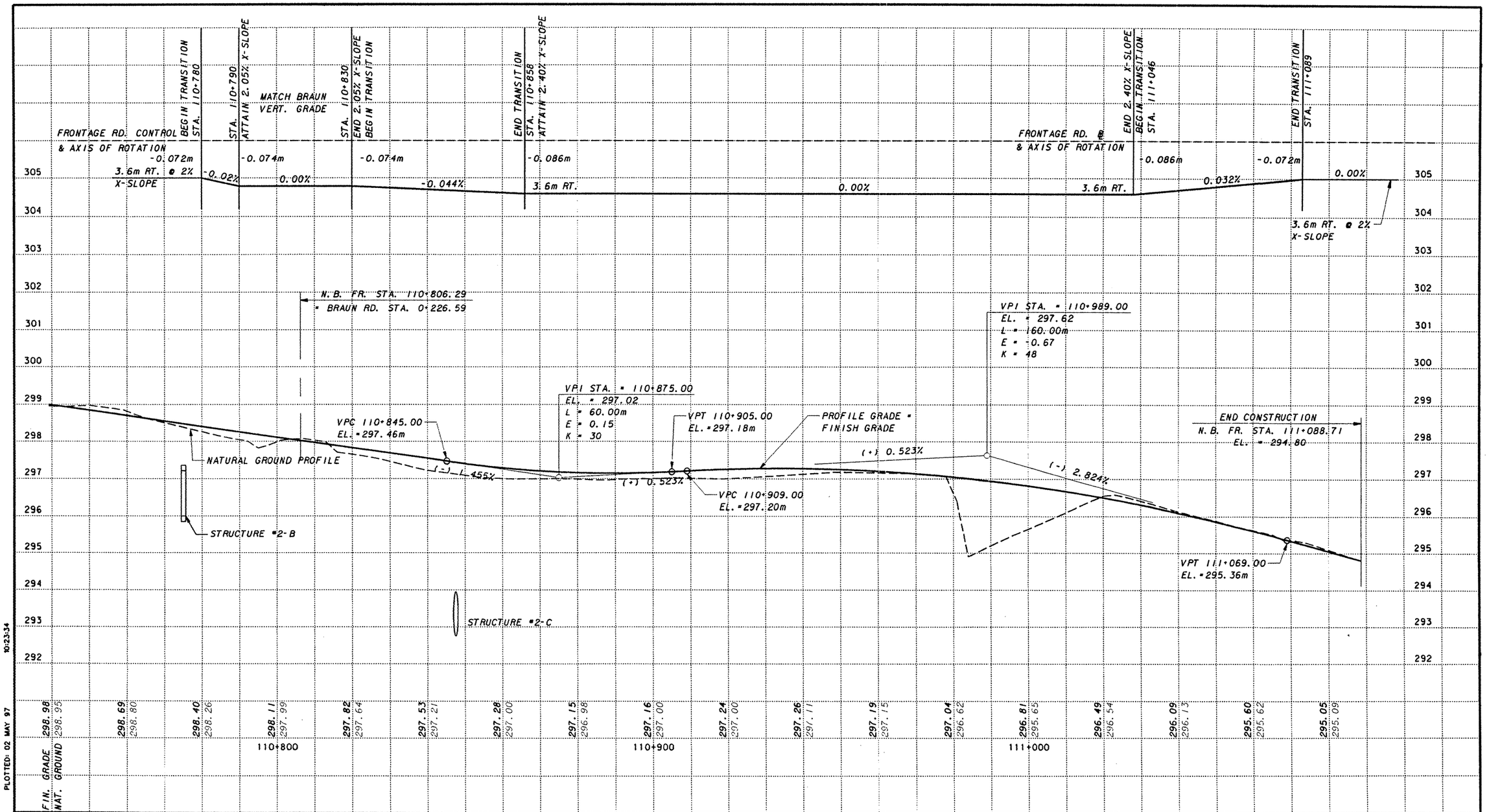

SCALE: 1:100 V
1:1000 H

STATE OF TEXAS
R. H. SHELLABARGER
75927
REGISTERED PROFESSIONAL ENGINEER

Texas Department of Transportation
LOOP 1604

N.B. FRONTAGE ROAD PROFILE
STA. 110+740 TO STA. 111+088.70

SHEET 4 OF 4

Kimley-Horn and Associates, Inc.

Designed	LMW	DIST	FED REG	FEDERAL AID PROJECT			HIGHWAY
Checked	BHS	15	6	CD 2452-01-035			LP1604
Drawn	LMW	COUNTY		CONTROL	SECT	JOB	SHEET
Checked	BHS	BEXAR		2452	01	035	138

LEVELS DISPLAYED

1	2	3	4	5	6	7	8	9	10	11	12	13	14	15	16	
17	18	19	20	21	22	23	24	25	26	27	28	29	30	31	32	
33	34	35	36	37	38	39	40	41	42	43	44	45	46	47	48	
49	50	51	52	53	54	55	56	57	58	59	60	61	62	63		

FILENAME: gr\67316-03\nfrvp04.dgn PLOTTED: 02 MAY 97 10:23:34

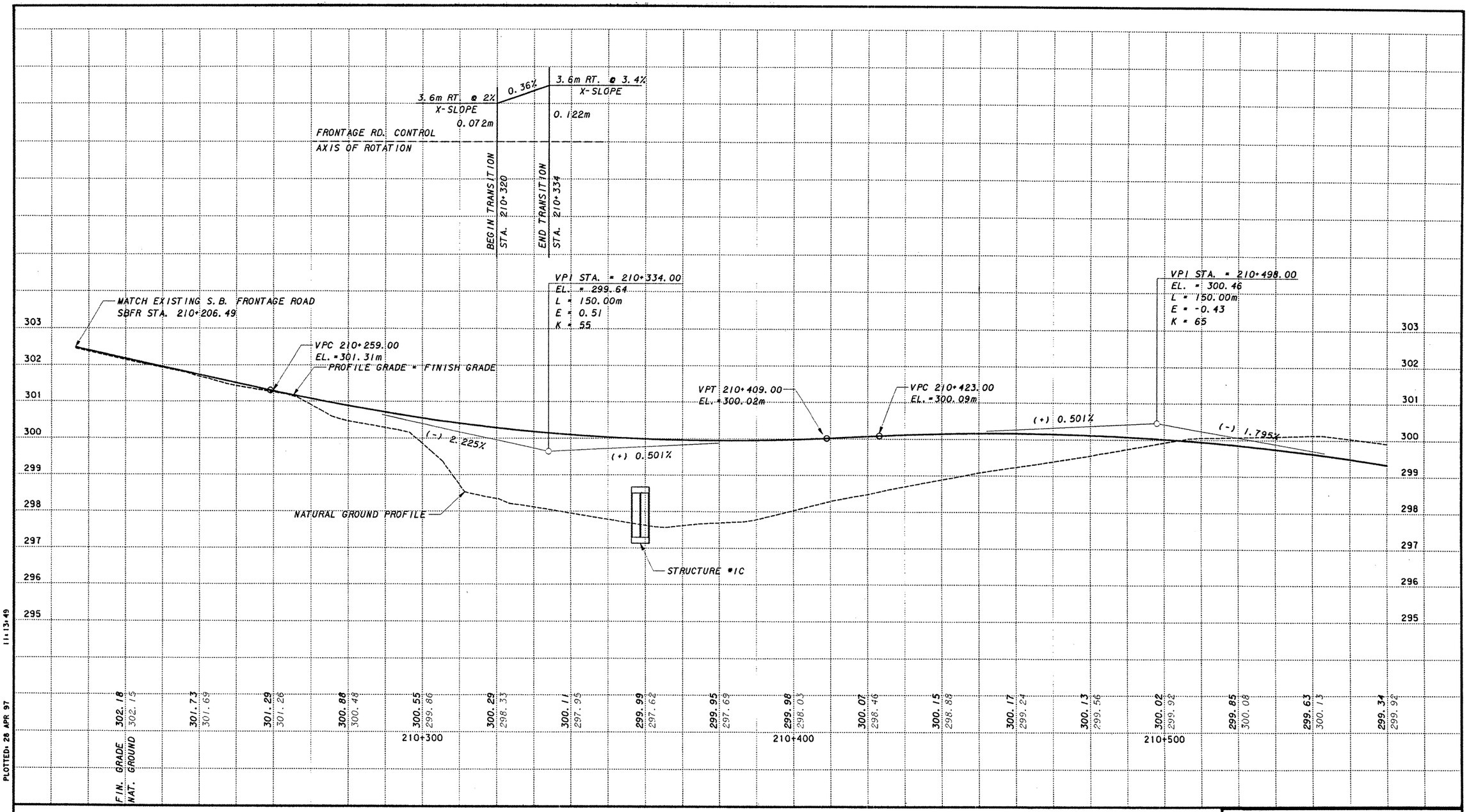

SCALE: 1:100 V
1:1000 H

STATE OF TEXAS
R. H. SHELLABARGER
75927
REGISTERED
PROFESSIONAL ENGINEER

Rebecca H. Shellabarger
7 May 97

Texas Department of Transportation
LOOP 1604

S.B. FRONTAGE ROAD PROFILE
STA. 210+206.49 TO STA. 210+560

SHEET 1 OF 3

Kimley-Horn and Associates, Inc.

Designed	LMW	DIST	FED REG	FEDERAL AID PROJECT •				HIGHWAY
Checked	BHS	15	6	CD 2452-01-035				LP1604
Drawn	RWA	COUNTY			CONTROL	SECT	JOB	SHEET
Checked	BHS	BEXAR			2452	01	035	139

PLOTTED: 28 APR 97 11:13:49

FILENAME: G:\67316-03\SFRRVP01.dgn

LEVELS DISPLAYED

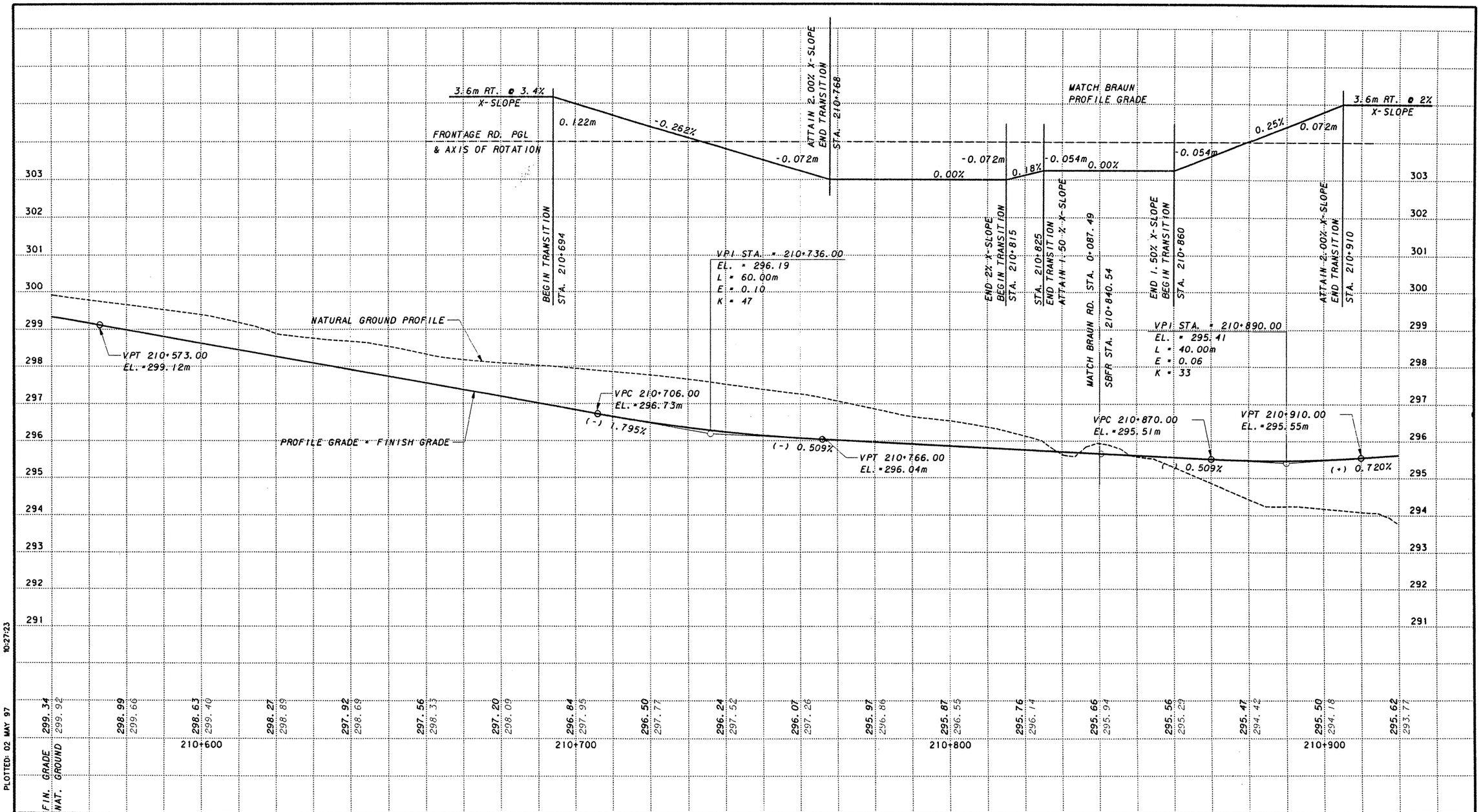

PLOTTED: 02 MAY 97 10:27:23

FILENAME: g:\67316-03\strvp02.dgn

LEVELS DISPLAYED																																	
1	2	3	4	5	6	7	8	9	10	11	12	13	14	15	16	17	18	19	20	21	22	23	24	25	26	27	28	29	30	31	32	33	34
35	36	37	38	39	40	41	42	43	44	45	46	47	48	49	50	51	52	53	54	55	56	57	58	59	60	F1	F2	F3					

SCALE: 1:100 V
1:1000 H

STATE OF TEXAS
R. H. SHELLABARGER
75927
REGISTERED
PROFESSIONAL ENGINEER

Richard H. Shellabarger
2 May 97

Texas Department of Transportation
LOOP 1604

S.B. FRONTAGE ROAD PROFILE
STA. 210+560 TO STA. 210+920

SHEET 2 OF 3

Kimley-Horn and Associates, Inc.

Designed	LMW	DIST	FED REG	FEDERAL AID PROJECT				HIGHWAY
Checked	BHS	15	6	CD 2452-01-035				LP1604
Drawn	KWA	COUNTY			CONTROL	SECT	JOB	SHEET
Checked	BHS	BEXAR			2452	01	035	140

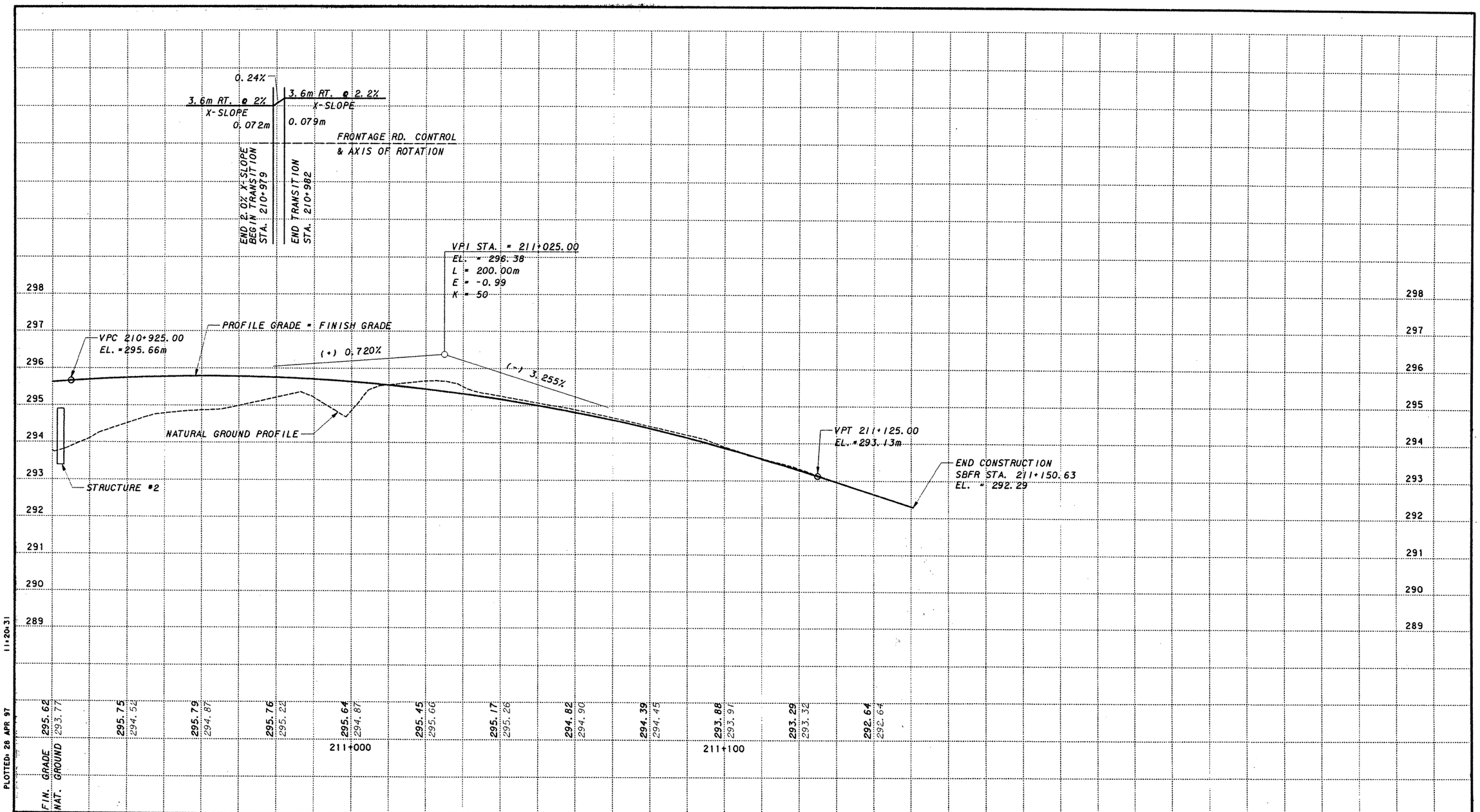

PLOTTED: 28 APR 97 11:20:31

FILENAME: G:\67316-03\SFRRVP03.dgn

LEVELS DISPLAYED

1	2	3	4	5	6	7	8	9	10	11	12	13	14	15	16	17	18	19	20	21	22	23	24	25	26	27	28	29	30	31	32
33	34	35	36	37	38	39	40	41	42	43	44	45	46	47	48	49	50	51	52	53	54	55	56	57	58	59	60	61	62	63	

SCALE: 1:100 V
1:1000 H

STATE OF TEXAS
R. H. SHELLABARGER
75927
REGISTERED
PROFESSIONAL ENGINEER

Texas Department of Transportation
LOOP 1604

S.B. FRONTAGE ROAD PROFILE

STA. 210+920 TO STA. 211+150.63

SHEET 3 OF 3

Kimley-Horn and Associates, Inc.

Designed	LMW	DIST	FED REG	FEDERAL AID PROJECT #			HIGHWAY
Checked	BHS	15	6	CD 2452-01-035			LP1604
Drawn	KWA	COUNTY		CONTROL	SECT	JOB	SHEET
Checked	BHS	BEXAR		2452	01	035	141

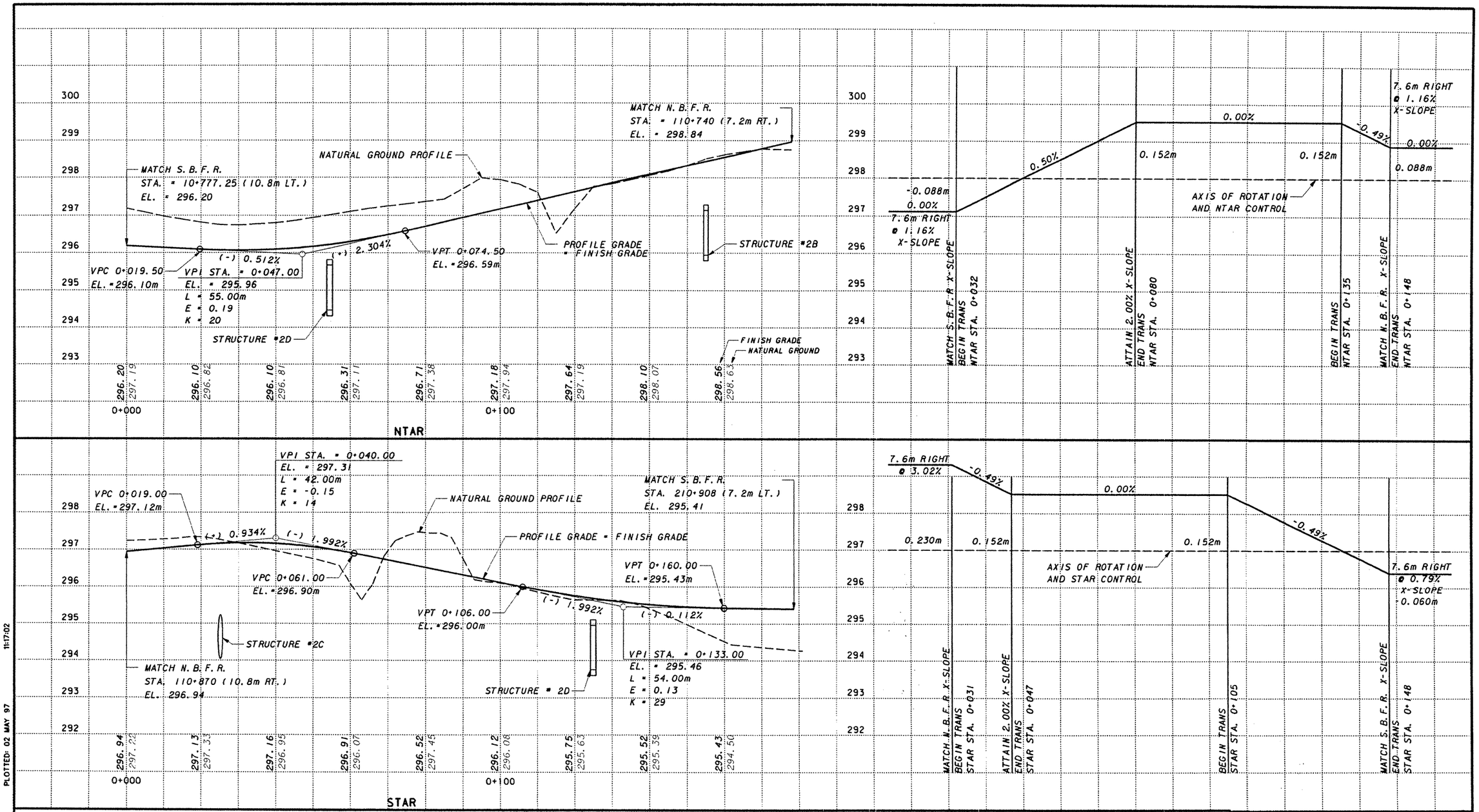

SCALE: 1:100 V
1:1000 H

STATE OF TEXAS
R. H. SHELLABARGER
75927
REGISTERED PROFESSIONAL ENGINEER

Rebecca H. Shellabarger
2 May 97

Texas Department of Transportation
LOOP 1604

TAR PROFILE SHEET
STAR
STA. 0+000 to STA. 0+178.67
NTAR
STA. 0+000 TO STA. 0+178.54
SHEET 1 OF 1

Kimley-Horn and Associates, Inc.

Designed	KWA	DIST	FED REG	FEDERAL AID PROJECT				HIGHWAY
Checked	BHS	15	6	CD 2452-01-035				LP1604
Drawn	KWA	COUNTY			CONTROL	SECT	JOB	SHEET
Checked	BHS	BEXAR			2452	01	035	142

LEVELS DISPLAYED

1	2	3	4	5	6	7	8	9	10	11	12	13	14	15	16
17	18	19	20	21	22	23	24	25	26	27	28	29	30	31	32
33	34	35	36	37	38	39	40	41	42	43	44	45	46	47	48
49	50	51	52	53	54	55	56	57	58	59	60	61	62	63	

FILENAME: g:\67316-03\604rvs01.dgn PLOTTED: 02 MAY 97 11:17:02

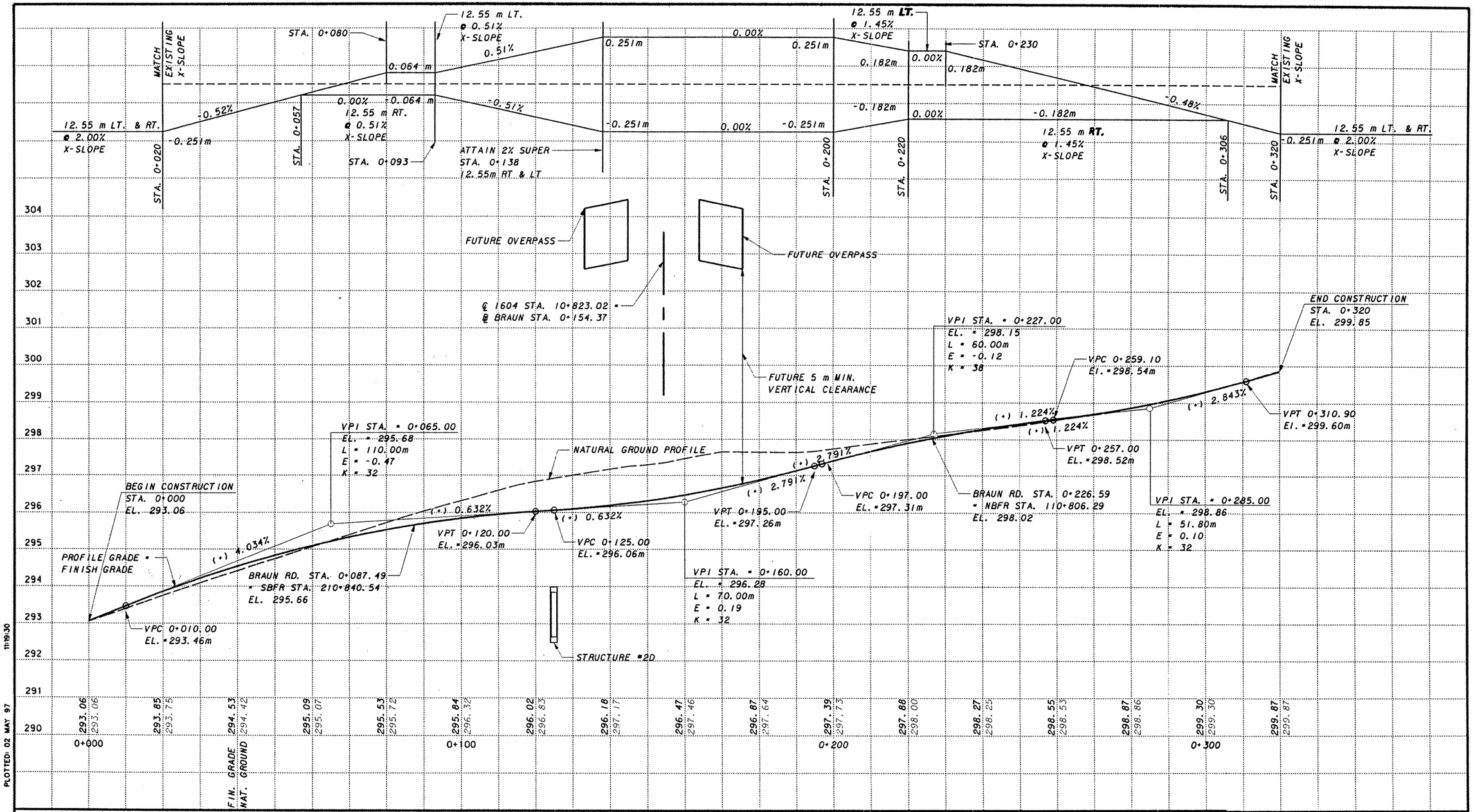

SCALE: 1:100 V
1:1000 H

STATE OF TEXAS
R. H. SHELLABARGER
75927
REGISTERED PROFESSIONAL ENGINEER

Texas Department of Transportation
LOOP 1604

BRAUN RD. PROFILE SHEET
STA. 0+000 TO STA. 0+320

SHEET 1 OF 1

Kimley-Horn and Associates, Inc.

Designed	LMW	DIST	FED REG	FEDERAL AID PROJECT				HIGHWAY
Checked	BHS	15	6	CD 2452-01-035				LP1604
Drawn	LMW	COUNTY			CONTROL	SECT	JOB	SHEET
Checked	BHS	BEXAR			2452	01	035	143

LEVELS DISPLAYED																
1	2	3	4	5	6	7	8	9	10	11	12	13	14	15	16	
17	18	19	20	21	22	23	24	25	26	27	28	29	30	31	32	
33	34	35	36	37	38	39	40	41	42	43	44	45	46	47	48	
49	50	51	52	53	54	55	56	57	58	59	60	61	62	63		

FILENAME: g:\67316-03\braunpro.dgn PLOTTED: 02 MAY 97 11:19:30

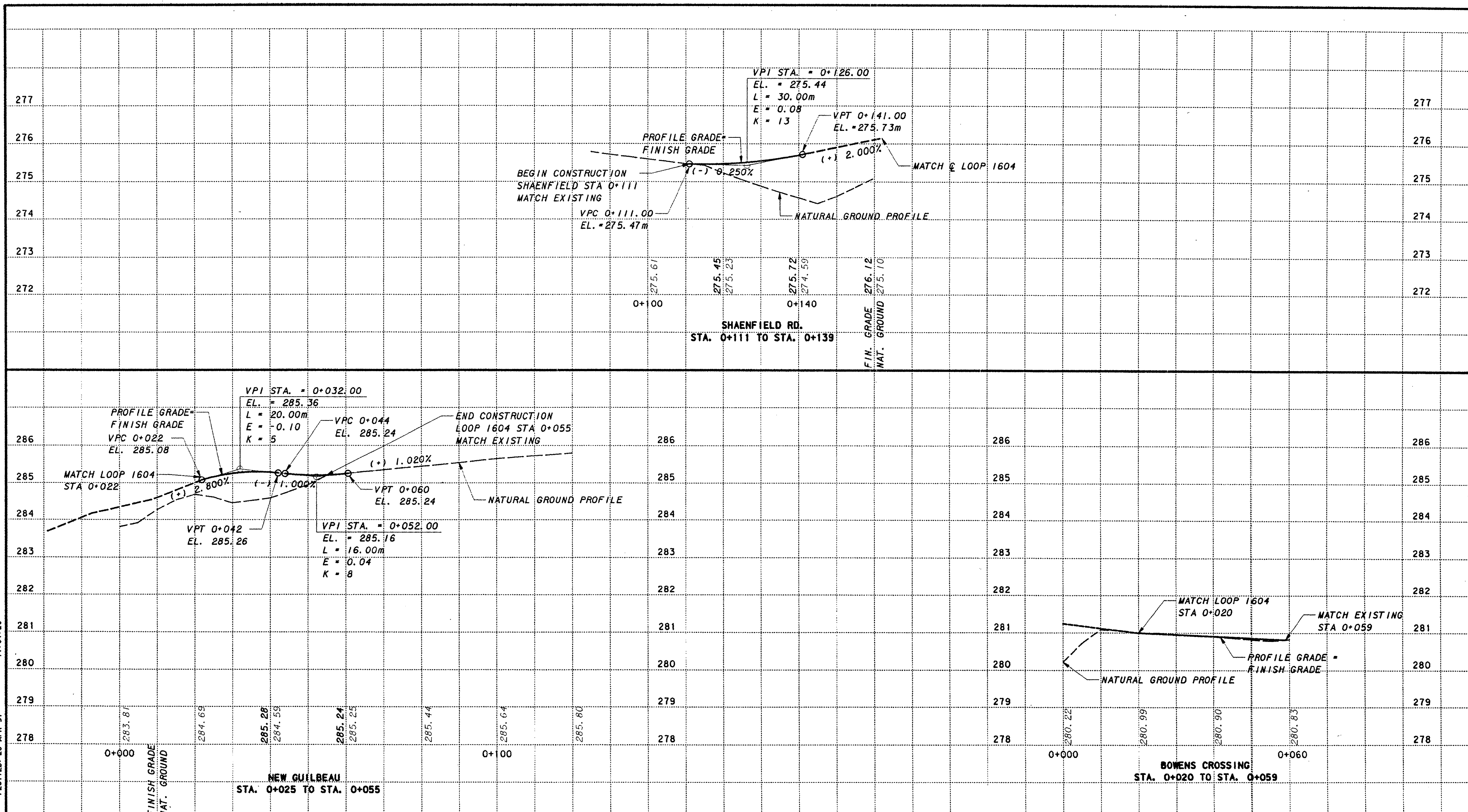

SCALE: 1:100 V
1:1000 H

STATE OF TEXAS
R. H. SHELLABARGER
75927
REGISTERED PROFESSIONAL ENGINEER

Rebecca H. Shellabarger
2 May 97

Texas Department of Transportation
LOOP 1604

CROSS STREET PROFILES

NEW GUILBEAU RD.
BOWEN'S CROSSING
SHAENFIELD RD.

SHEET 1 OF 1

Kimley-Horn and Associates, Inc.

Designed	LMW	DIST	FED REG	FEDERAL AID PROJECT #			HIGHWAY
Checked	BHS	15	6	CD 2452-01-035			LP1604
Drawn	LMW	COUNTY		CONTROL	SECT	JOB	SHEET
Checked	BHS	BEXAR		2452	01	035	144

PLOTTED: 28 APR 97 11:07:26

FILENAME: G:\67316-03\604RVS04.dgn

LEVELS DISPLAYED

1	2	3	4	5	6	7	8	9	10	11	12	13	14	15	16
17	18	19	20	21	22	23	24	25	26	27	28	29	30	31	32
33	34	35	36	37	38	39	40	41	42	43	44	45	46	47	48
49	50	51	52	53	54	55	56	57	58	59	60	61	62	63	

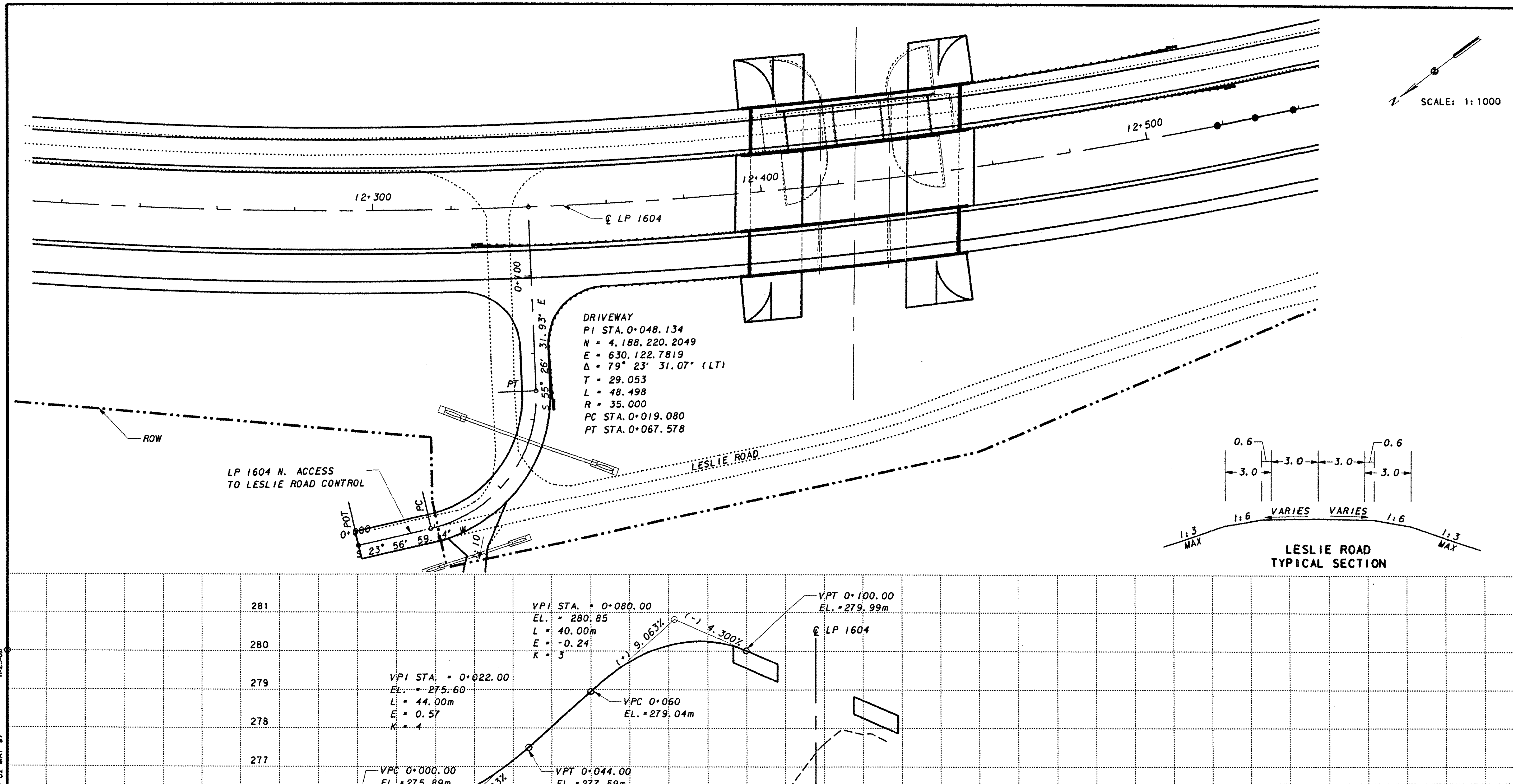

NO.	DATE	REVISION	APPROV.

Texas Department of Transportation
LOOP 1604

PLAN & PROFILE SHEET
LESLIE ROAD CONNECTION

STATE OF TEXAS — BRENT L. CHRISTIAN — 73921 — REGISTERED PROFESSIONAL ENGINEER
5/5/97

Kimley-Horn and Associates, Inc.

Designed	DIST	FED REG	FEDERAL AID PROJECT #			HIGHWAY
Checked	15	6	CD 2452-01-035			LP1604
Drawn	COUNTY		CONTROL	SECT	JOB	SHEET
Checked	BEXAR		2452	01	035	1444

FILENAME: g:\67316-03\604rvs03.dgn PLOTTED: 02 MAY 97 11:23:06

LEVELS DISPLAYED

1	2	3	4	5	6	7	8	9	10	11	12	13	14	15	16
17	18	19	20	21	22	23	24	25	26	27	28	29	30	31	32
33	34	35	36	37	38	39	40	41	42	43	44	45	46	47	48
49	50	51	52	53	54	55	56	57	58	59	60	61	62	63	

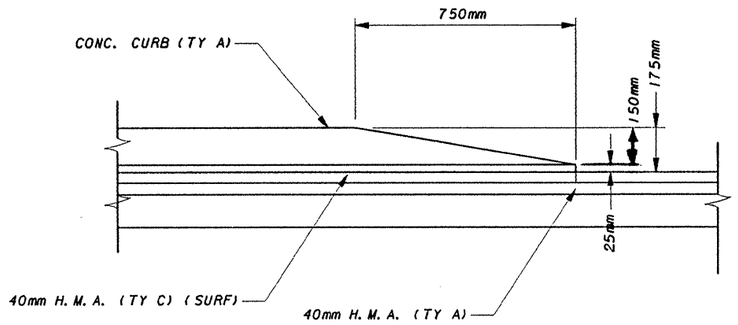

CURB END SECTION
@ INTERSECTING STREETS
WITHOUT CURB

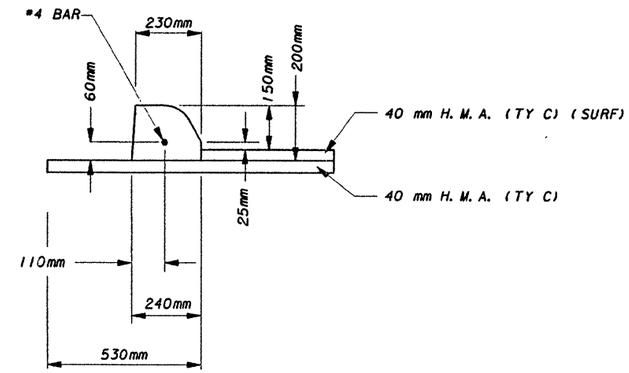

CONC. CURB (TY A)

For Detail on Ty 1 Curb. See Sheet 391B

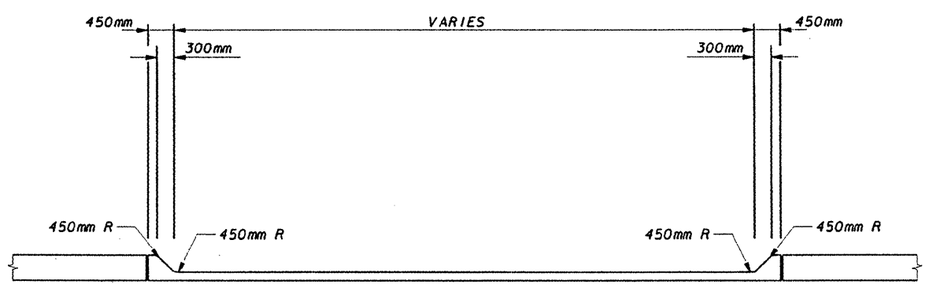

TYPICAL DRIVEWAY ELEVATION

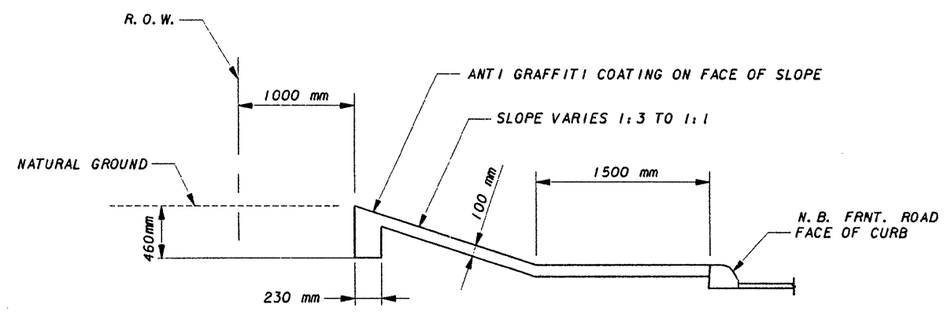

RIPRAP DETAIL
NB FRONTAGE ROAD
STA 109+840 TO STA 110+060

STATE OF TEXAS
J. KEVIN KENNEDY
72984
REGISTERED
PROFESSIONAL ENGINEER
J. Kevin Kennedy
5-2-97

NO.	DATE	REVISION	APPROV.

Texas Department of Transportation
LOOP 1604

MISCELLANEOUS DETAILS

SHEET 1 OF 2

Kimley-Horn and Associates, Inc.

Designed	LMW	DIST	FED REG	FEDERAL AID PROJECT				HIGHWAY
Checked	BHS	15	6	CD 2452-01-035				LP1604
Drawn	LMW	COUNTY			CONTROL	SECT	JOB	SHEET
Checked	BHS	BEXAR			2452	01	035	145

FILENAME: g:\67316-03\604rst00.dgn PLOTTED: 02 MAY 97 11:44:25

LEVELS DISPLAYED

1	2	3	4	5	6	7	8	9	10	11	12	13	14	15	16
17	18	19	20	21	22	23	24	25	26	27	28	29	30	31	32
33	34	35	36	37	38	39	40	41	42	43	44	45	46	47	48
49	50	51	52	53	54	55	56	57	58	59	60	61	62	63	

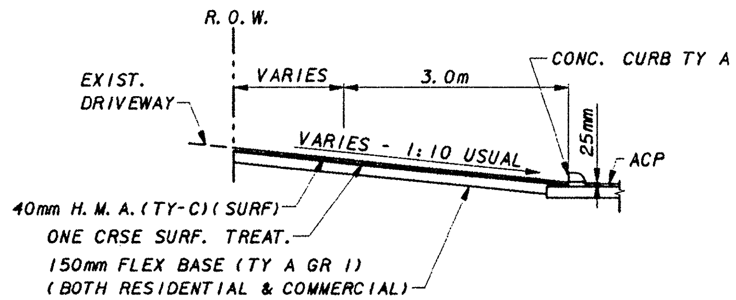

TYPICAL ASPHALT DRIVEWAY

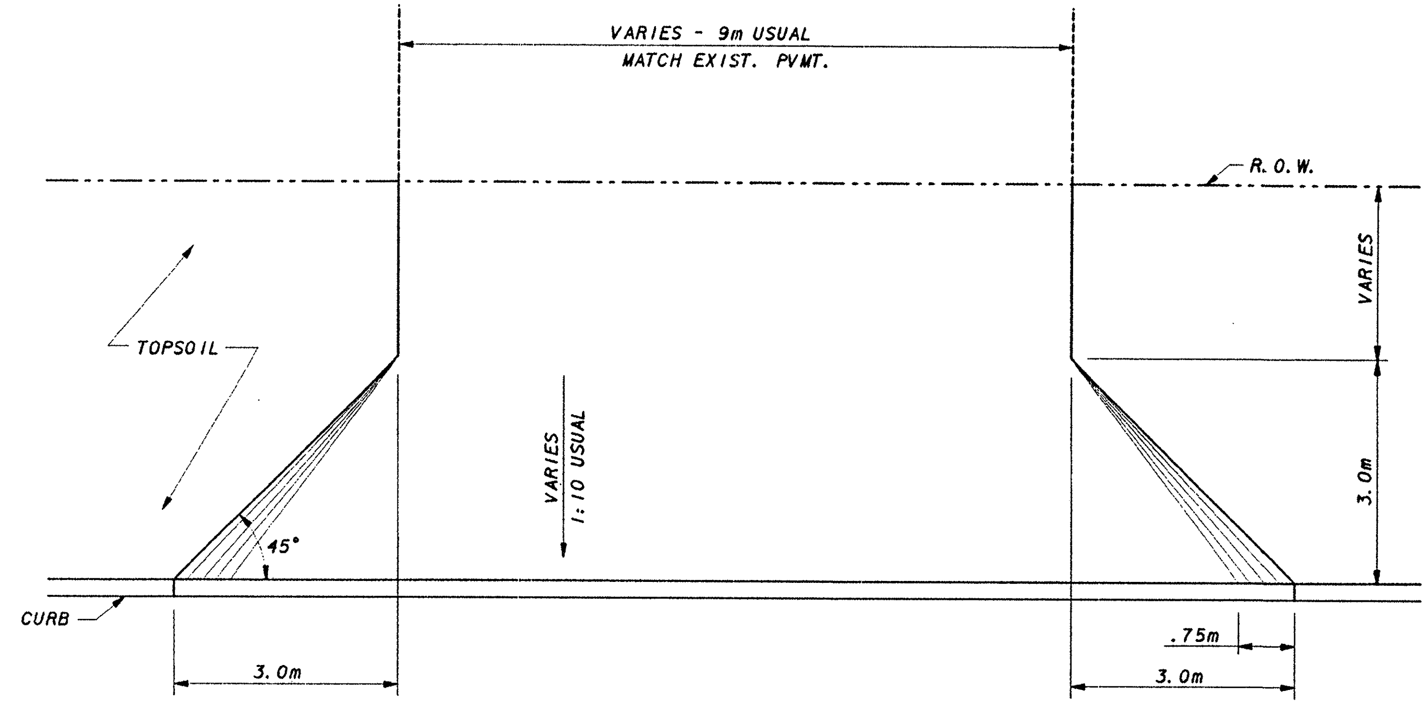

TYPICAL COMMERCIAL DRIVEWAY

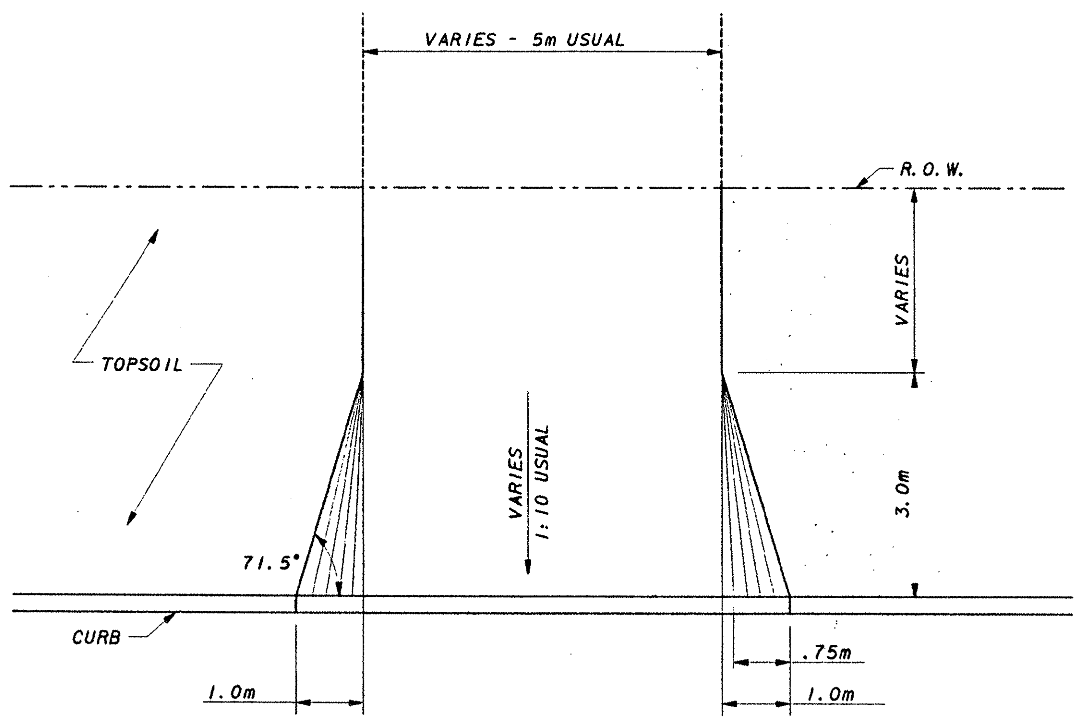

TYPICAL RESIDENTIAL DRIVEWAY

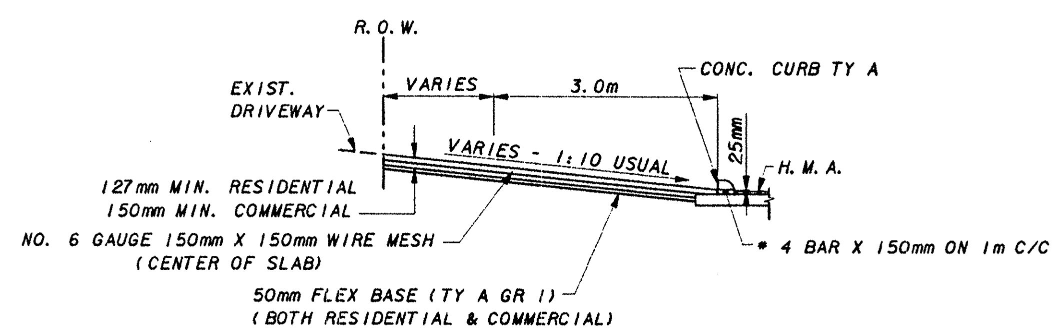

TYPICAL CONCRETE DRIVEWAY

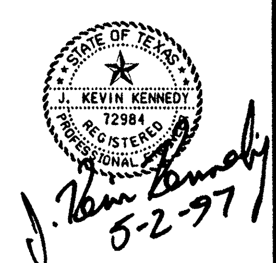

NO.	DATE	REVISION	APPROV.

Texas Department of Transportation
LOOP 1604

MISCELLANEOUS DETAILS

SHEET 2 OF 2

Kimley-Horn and Associates, Inc.

		DIST	FED REG	FEDERAL AID PROJECT #			HIGHWAY
Designed	LMW	15	6	CD 2452-01-035			LP1604
Checked	BHS	COUNTY		CONTROL	SECT	JOB	SHEET
Drawn	LMW	BEXAR		2452	01	035	141
Checked	BHS						

FILENAME: g:\67316-03\604rst02.dgn PLOTTED: 28 APR 97 10:27:26

LEVELS DISPLAYED

1	2	3	4	5	6	7	8	9	10	11	12	13	14	15	16
17	18	19	20	21	22	23	24	25	26	27	28	29	30	31	32
33	34	35	36	37	38	39	40	41	42	43	44	45	46	47	48
49	50	51	52	53	54	55	56	57	58	59	60	61	62	63	

LIMITS OF RIPRAP TYPE RR-8
1:3
1:2
EXISTING RIPRAP TO BE REMOVED
LIMITS OF RIPRAP TYPE RR-8
℄ HELOTES CREEK
FLOW
LIMITS OF RIPRAP TYPE RR-8
EXISTING RIPRAP TO BE REMOVED
LIMITS OF RIPRAP TYPE RR-8
MBGF
℄ BENT NO. 2
℄ BENT NO. 3
℄ BEAM #1
0.3m
NOMINAL FACE OF RAIL, TYPE SSTR(M) W/SIDE DRAINS
100mm SEJ-A
3.0m SHD.
3.6m LANE
3.6m LANE
1.2m SHD.

BEGIN BRIDGE
ABUTMENT NO. 1
& FRONT FACE OF
ABUT. BACKWALL
℄ STA. 12+398.652
(14.60 m LT.)
CONTROL LINE
EL. 278.61

CONTROL LINE
N.B. BRIDGE
R = 1149.65m

EXISTING TEST HOLE #1

℄ BENT NO. 2
STA. 12+416.883
(14.60 m LT.)

12.0m OVERALL WIDTH
11.4m ROADWAY WIDTH
4.3%

℄ BENT NO. 3
STA. 12+435.115
(14.60m LT.)

EXISTING TEST HOLE #2

10.74m OVERALL
EXISTING BRIDGE TO BE REMOVED

END BRIDGE
ABUTMENT NO. 4
& FRONT FACE OF
ABUT. BACKWALL
℄ STA. 12+453.348
(14.60m LT.)
CONTROL LINE
EL. 278.62

NOMINAL FACE OF RAIL, TYPE SSTR(M)

100mm SEJ-A

GENERAL NOTES:

DESIGNED ACCORDING TO AASHTO "STANDARD SPECIFICATIONS FOR HIGHWAY BRIDGES", 1996 FOR AN MS-18 LOADING.
SUBSTRUCTURE SKEW ANGLES ARE MEASURED AT THE LOCAL TANGENT AT STATIONS ALONG ℄ LOOP 1604.
FOR TEST HOLE AND BORING LEGEND, SEE SHEET 149.
FOR RIPRAP LAYOUT, SEE HELOTES CREEK GRADING PLAN SHEET 212.

MBGF

℄ BEAM #6
LIMITS OF RIPRAP TYPE RR-8
14.60m MEASURED RADIALLY TO ℄ LP 1604
N52°38'32.13"W TYPICAL FOR ALL BENTS & ABUTS.
0.3m
FLOW
N52°38'32.13"W

HYDRAULIC DATA	
Q_{50} = 765m3/s	Q_{100} = 883m3/s
HW_{50} = 276.43	HW_{100} = 276.62
V_{50} = 3.54m/s	V_{100} = 3.91m/s

℄ HORIZONTAL CURVE DATA
PI STA. 12+385.696
N = 4,188,148.7445
E = 630,148.0131
Δ = 18°51'09.62" (LT.)
T = 193.290m
L = 383.086m
R = 1,164.250m
PC STA. = 12+192.405
PT STA. = 12+575.492

PLAN
SCALE: 1:200

LIMITS OF RIPRAP TYPE RR-8
EXISTING RIPRAP TO BE REMOVED
LIMITS OF RIPRAP TYPE RR-8
84°23'05.1"
83°29'56.1"
℄ HELOTES CREEK
℄ STA. 12+424.198
℄ BENT NO. 3
℄ STA. 12+433.198
EXISTING RIPRAP TO BE REMOVED
82°36'47.1"
℄ ABUTMENT NO. 4
℄ STA. 12+451.198
81°43'38.1"
12+400
12+420
BORING B-3
12+440
℄ ABUTMENT NO. 1
℄ STA. 12+397.198
℄ BENT NO. 2
℄ STA. 12+415.198
℄ LP 1604 & PROFILE GRADE

OVERALL LENGTH OF RAIL TYPE SSTR(M) = 118.222m
OVERALL LENGTH = 54.000m
MBGF
END OF RAIL FOR PAYMENT
2.600m
18.000m PRESTRESSED CONCRETE BEAMS (TYPE B)
18.000m PRESTRESSED CONCRETE BEAMS (TYPE B)
18.000m PRESTRESSED CONCRETE BEAMS (TYPE B)
2.600m
END OF RAIL FOR PAYMENT
+0.015%

280
278
276
274
272
270
268
266
264
262
260

BEGIN BRIDGE
ABUTMENT NO. 1
& FRONT FACE OF
ABUT. BACKWALL
℄ STA. 12+398.652
(14.60 m LT.)
CONTROL LINE
EL. 278.61

1:2 RIPRAP (RR-8)
LOW BEAM EL. = 277.150
TEST HOLE #1
STA. 12+409.93
13.716m LT.
TOP EL. 273.49
EXISTING GRADE
750 mm DIA. DRILLED SHAFTS
L = 18m
1
LIMITS OF CHANNEL EXCAVATION
750 mm DIA. DRILLED SHAFTS
L = 12m
2
100/2" (51mm)
88/3¼" (305mm)
100/1¼" (38mm)
100/3¼" (89mm)

HW_{100} = 276.62
HW_{50} = 276.43
℄ HELOTES CREEK
H = 6.35m
H = 6.35m
BORING B-3
STA. 12+426.00
2.0m RT.
TOP EL. 271.53
FINISHED GRADE
750 mm DIA. DRILLED SHAFTS
L = 12m
3
57/12" (305mm)
72/12" (305mm)
36/12" (305mm)
63/12" (305mm)
100/1¾" (44mm)
100/2¼" (63mm)
100/1¼" (32mm)
100/¾" (16mm)
100/1⅝" (41mm)
100/1¼" (29mm)

TEST HOLE #2
STA. 12+438.89
12.192m LT.
TOP EL. 273.25
1:2 RIPRAP (RR-8)
750 mm DIA. DRILLED SHAFTS
L = 18m
4
100/6¼" (159mm)
100/6¼" (159mm)
100/3" (76mm)
100/1¼" (35mm)
100/1" (25mm)

END BRIDGE
ABUTMENT NO. 4
& FRONT FACE OF
ABUT. BACKWALL
℄ STA. 12+453.348
(14.60m LT.)
CONTROL LINE
EL. 278.62

PERM. STR. NO. 15-015-2452-01-150

ELEVATION
1:200

12+400
12+420
12+440

NO.	DATE	REVISION	APPROV.

Texas Department of Transportation
BRIDGE LAYOUT

NORTHBOUND
LOOP 1604 BRIDGE
AT HELOTES CREEK

STATE OF TEXAS
S. N. AFTAB
80137
REGISTERED PROFESSIONAL ENGINEER
5/3/97

Kimley-Horn and Associates, Inc.

Designed SNA	DIST	FED REG	FEDERAL AID PROJECT #				HIGHWAY
Checked DKK	15	6	CD 2452-01-035				LP1604
Drawn JTK	COUNTY		CONTROL	SECT	JOB	SHEET	
Checked SNA	BEXAR		2452	01	035	147	

1 OF 4

LEVELS DISPLAYED

1	2	3	4	5	6	7	8	9	10	11	12	13	14	15	16
17	18	19	20	21	22	23	24	25	26	27	28	29	30	31	32
33	34	35	36	37	38	39	40	41	42	43	44	45	46	47	48
49	50	51	52	53	54	55	56	57	58	59	60	61	62	63	

FILENAME: G:\67316-03\HELBLM01.DGN
PLOTTED: 02 MAY 97
07:18:42

LIMITS OF RIPRAP TYPE RR-8
1:3
1:2
EXISTING RIPRAP TO BE REMOVED
LIMITS OF RIPRAP TYPE RR-8
℄ HELOTES CREEK
FLOW
N
℄ BENT NO. 2
℄ BEAM #1
0.3m
NOMINAL FACE OF RAIL, TYPE SSTR(M) W/SIDE DRAINS
℄ BENT NO. 3
EXISTING RIPRAP TO BE REMOVED
LIMITS OF RIPRAP TYPE RR-8
MBGF
100mm SEJ-A
3.0m SHD.
3.6m LANE
3.6m LANE
1.2m SHD.

BEGIN BRIDGE
ABUTMENT NO. 1
& FRONT FACE OF
ABUT. BACKWALL
℄ STA. 12+398.652
(14.60 m LT.)
CONTROL LINE
EL. 278.61

CONTROL LINE
W.B. BRIDGE
R = 1149.65m

EXISTING TEST HOLE #1

100mm SEJ-A

℄ BENT NO. 2
STA. 12+416.883
(14.60 m LT.)

12.0m OVERALL WIDTH
11.4m ROADWAY WIDTH
4.3%

NOMINAL FACE OF RAIL, TYPE SSTR(M)

℄ BENT NO. 3
STA. 12+435.115
(14.60m LT.)

EXISTING TEST HOLE #2

10.74m OVERALL
EXISTING BRIDGE TO BE REMOVED

END BRIDGE
ABUTMENT NO. 4
& FRONT FACE OF
ABUT. BACKWALL
℄ STA. 12+453.348
(14.60m LT.)
CONTROL LINE
EL. 278.62

GENERAL NOTES:

DESIGNED ACCORDING TO AASHTO "STANDARD SPECIFICATIONS FOR HIGHWAY BRIDGES", 1996 FOR AN MS-18 LOADING.
SUBSTRUCTURE SKEW ANGLES ARE MEASURED AT THE LOCAL TANGENT AT STATIONS ALONG ℄ LOOP 1604.
FOR TEST HOLE AND BORING LEGEND, SEE SHEET 149.
FOR RIPRAP LAYOUT, SEE HELOTES CREEK GRADING PLAN SHEET 212.

℄ BEAM #6
LIMITS OF RIPRAP TYPE RR-8
14.60m
MEASURED RADIALLY TO ℄ LP 1604
N52°38' 32.13"W TYPICAL FOR ALL BENTS & ABUTS.
0.3m
FLOW
N52°38' 32.13"W

HYDRAULIC DATA	
Q_{50} = 765m3/s	Q_{100} = 883m3/s
HW_{50} = 276.43	HW_{100} = 276.62
V_{50} = 3.54m/s	V_{100} = 3.91m/s

LIMITS OF RIPRAP TYPE RR-8
EXISTING RIPRAP TO BE REMOVED
84°23' 05.1"
83°29' 56.1"
℄ HELOTES CREEK
℄ STA. 12+424.198
℄ BENT NO. 3
℄ STA. 12+433.198
BORING B-3
82°36' 47.1"
EXISTING RIPRAP TO BE REMOVED
LIMITS OF RIPRAP TYPE RR-8
℄ ABUTMENT NO. 4
℄ STA. 12+451.198
81°43' 38.1"
℄ LP 1604 & PROFILE GRADE

12+400
12+420
12+440

℄ ABUTMENT NO. 1
℄ STA. 12+397.198
℄ BENT NO. 2
℄ STA. 12+415.198

℄ HORIZONTAL CURVE DATA
PI STA. 12+385.696
N = 4,188,148.7445
E = 630,148.0131
Δ = 18°51' 09.62" (LT.)
T = 193.290m
L = 383.086m
R = 1,164.250m
PC STA. = 12+192.405
PT STA. = 12+575.492

PLAN
SCALE: 1:200

OVERALL LENGTH OF RAIL TYPE SSTR(M) = 118.422m
OVERALL LENGTH = 54.000m

END OF RAIL FOR PAYMENT
2.600m
18.000m PRESTRESSED CONCRETE BEAMS (TYPE B)
18.000m PRESTRESSED CONCRETE BEAMS (TYPE B)
18.000m PRESTRESSED CONCRETE BEAMS (TYPE B)
2.600m
END OF RAIL FOR PAYMENT
MBGF
+0.015%

BEGIN BRIDGE
ABUTMENT NO. 1
& FRONT FACE OF
ABUT. BACKWALL
℄ STA. 12+398.652
(14.66 m LT.)
CONTROL LINE
EL. 278.61

1:2 RIPRAP (RR-8)
LOW BEAM EL. = 277.150
TEST HOLE #1
STA. 12+409.93
13.716m LT.
TOP EL. 273.49
EXISTING GRADE
750 mm DIA. DRILLED SHAFTS
L = 18m
LIMITS OF CHANNEL EXCAVATION
750 mm DIA. DRILLED SHAFTS
L = 12m
100/8" (51mm)
88/3½" (305mm)
100/1½" (38mm)
100/3½" (89mm)

HW_{100} = 276.62
℄ HELOTES CREEK
H = 6.35m
BORING B-3
STA. 12+426.00
2.0m RT.
TOP EL. 271.53
FINISHED GRADE
57/12" (305mm)
72/12" (305mm)
36/12" (305mm)
63/12" (305mm)
100/1¾" (44mm)
100/2½" (63mm)
100/1½" (38mm)
100/½" (16mm)
100/1⅝" (41mm)
100/1½" (29mm)

HW_{50} = 276.43
H = 6.35m
TEST HOLE #2
STA. 12+438.89
12.192m LT.
TOP EL. 273.25
750 mm DIA. DRILLED SHAFTS
L = 12m
100/6½" (159mm)
100/6½" (159mm)
100/3" (76mm)
100/1½" (35mm)
100/1" (25mm)

1:2 RIPRAP (RR-8)
750 mm DIA. DRILLED SHAFTS
L = 18m
PERM. STR. NO. 15-015-2452-01-150

END BRIDGE
ABUTMENT NO. 4
& FRONT FACE OF
ABUT. BACKWALL
℄ STA. 12+453.348
(14.60m LT.)
CONTROL LINE
EL. 278.62

ELEVATION
1:200

12+400
12+420
12+440

NO.	DATE	REVISION	APPROV.
1	1/5/98	Revised Length of Rail	SNA

Texas Department of Transportation
BRIDGE LAYOUT

NORTHBOUND
LOOP 1604 BRIDGE
AT HELOTES CREEK

STATE OF TEXAS
S. N. APTAR
80137
REGISTERED PROFESSIONAL ENGINEER
S. Nazneen Aptar
1/5/98

Kimley-Horn and Associates, Inc.

Designed SNA	DIST	FED REG	FEDERAL AID PROJECT	HIGHWAY
Checked DKK	15	6	CD 2452-01-035	LP1604
Drawn JTK	COUNTY		CONTROL SECT JOB	SHEET
Checked SNA	BEXAR		2452 01 035	147

Change Order No. 31 OF 4

A

LEVELS DISPLAYED

FILENAME: p:\67316-03\rwbibim01.dgn
PLOTTED: 05 JAN 98
15:14:18

GENERAL NOTES:

DESIGNED ACCORDING TO AASHTO "STANDARD SPECIFICATIONS FOR HIGHWAY BRIDGES", 1996 FOR AN MS-18 LOADING.
SUBSTRUCTURE SKEW ANGLES ARE MEASURED AT THE LOCAL TANGENT AT STATIONS ALONG ℄ LOOP 1604.
FOR TEST HOLE AND BORING LEGEND, SEE SHEET 149.
FOR RIPRAP LAYOUT, SEE HELOTES CREEK GRADING PLAN, SHEET 212.

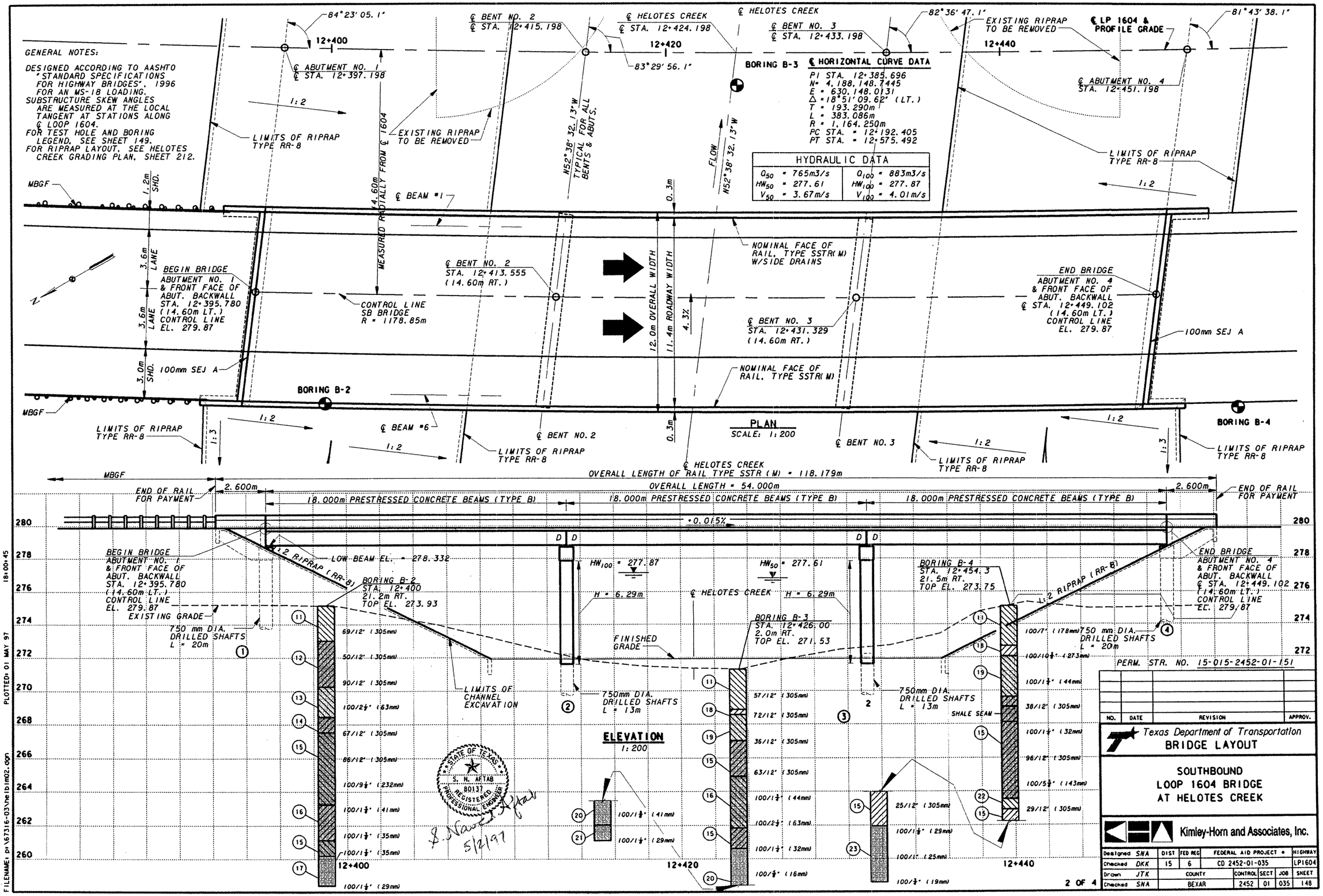

GENERAL NOTES:

DESIGNED ACCORDING TO AASHTO "STANDARD SPECIFICATIONS FOR HIGHWAY BRIDGES", 1996 FOR AN MS-18 LOADING.
SUBSTRUCTURE SKEW ANGLES ARE MEASURED AT THE LOCAL TANGENT AT STATIONS ALONG ℄ LOOP 1604.
FOR TEST HOLE AND BORING LEGEND, SEE SHEET 149.
FOR RIPRAP LAYOUT, SEE HELOTES CREEK GRADING PLAN, SHEET 212.

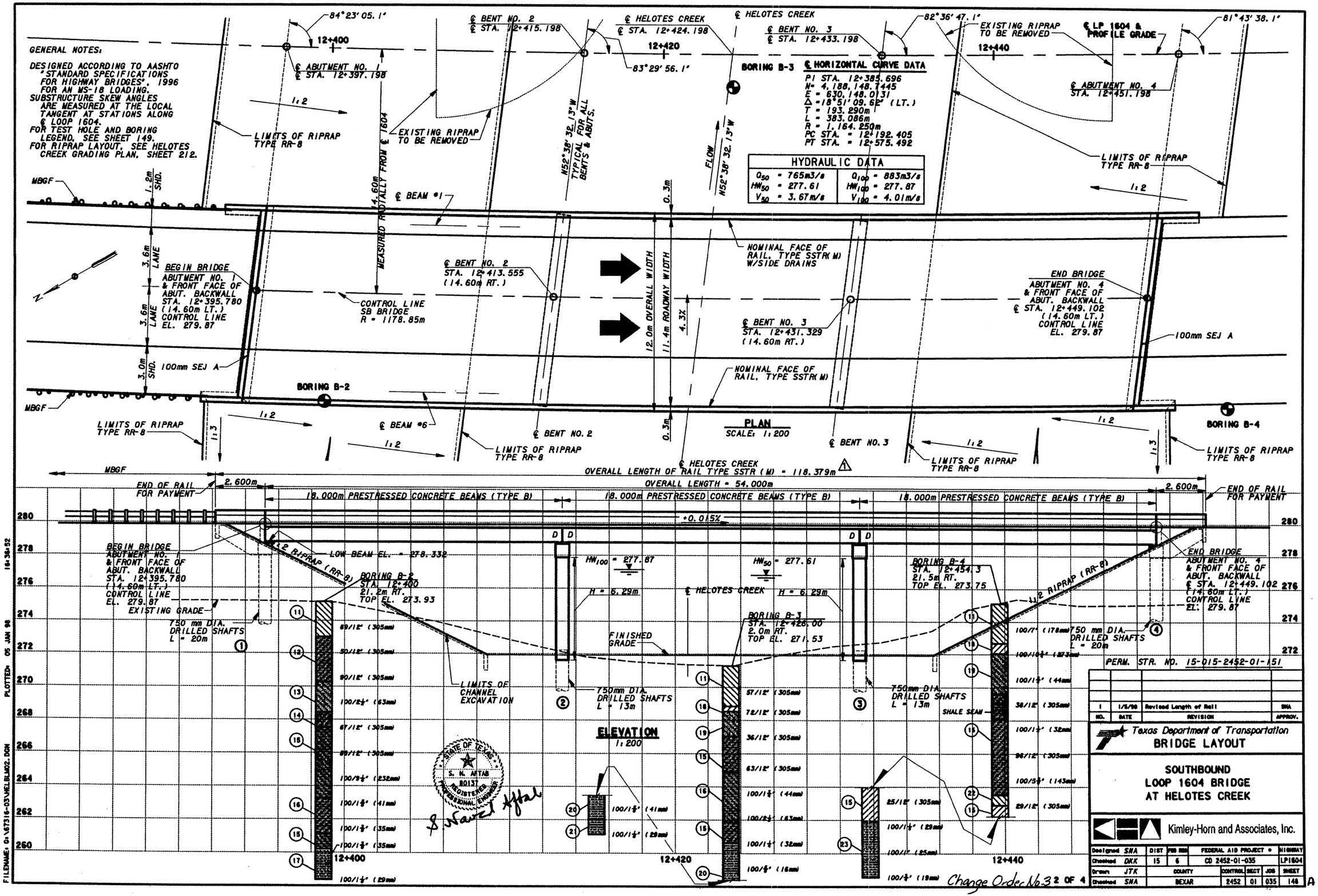

PERM. STR. NO. 15-015-2452-01-151

NO.	DATE	REVISION	APPROV.
1	1/5/98	Revised Length of Rail	SNA

Texas Department of Transportation
BRIDGE LAYOUT

SOUTHBOUND
LOOP 1604 BRIDGE
AT HELOTES CREEK

Kimley-Horn and Associates, Inc.

Designed SNA	DIST	FED RDS	FEDERAL AID PROJECT #					HIGHWAY
Checked DKK	15	6	CD 2452-01-035					LP1604
Drawn JTK	COUNTY			CONTROL	SECT	JOB	SHEET	
Checked SNA	BEXAR			2452	01	035	148	

Change Order No. 32 OF 4

A

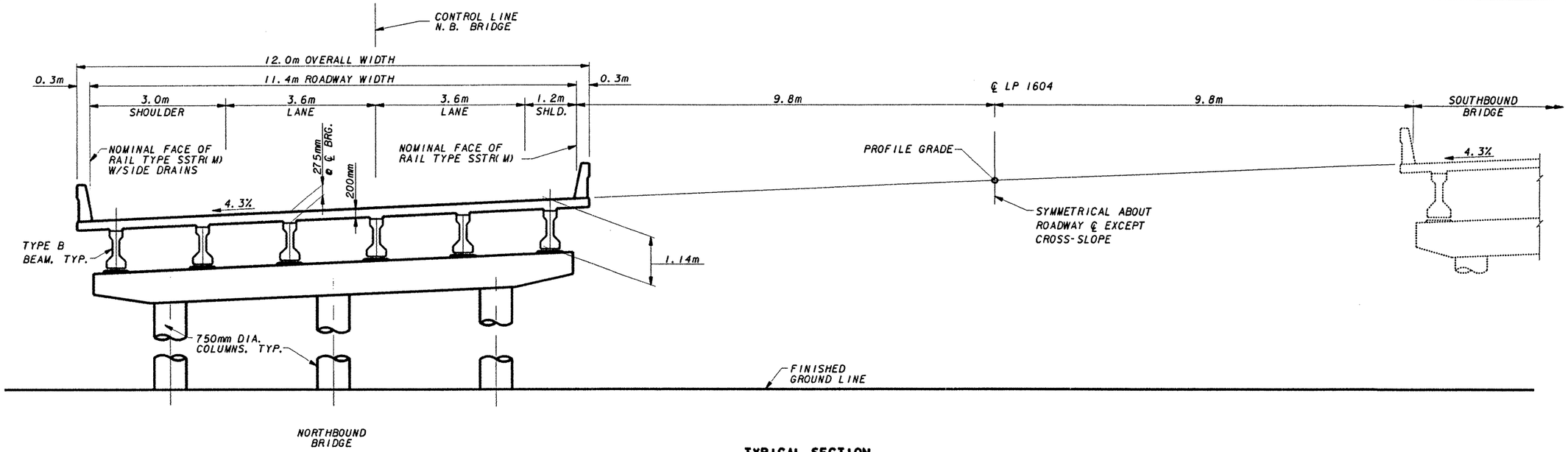

TYPICAL SECTION

NOTES:

ALL DIMENSIONS AND CROSS-SLOPES ARE MEASURED RADIAL TO ℄ LP 1604.
DIMENSIONS SHOWN ARE HORIZONTAL, AND LENGTHS MUST BE CORRECTED FOR GRADE OR CROSS SLOPE, WHERE APPROPRIATE.

DESIGN SPEED = 110kmh	
ADT =	1998 (2018)
	15,600 (29,100)
FUNCT. CLASS =	
URBAN FREEWAY	

NOTES:

NORTHBOUND BRIDGE IS SHOWN, SOUTHBOUND BRIDGE IS SIMILAR.
FOR NORTHBOUND BRIDGE LAYOUT AND GENERAL NOTES, SEE SHEET 147.
FOR SOUTHBOUND BRIDGE LAYOUT, SEE SHEET 148.
FOR SUMMARY OF ESTIMATED QUANTITIES & BEARING SEAT ELEVATIONS, SEE SHEET 150.

CONSTRUCTION SEQUENCE:

PHASE 1 - MAINTAIN TWO WAY TRAFFIC ON THE EXISTING STRUCTURE. CONSTRUCT THE NEW SOUTHBOUND STRUCTURE.
PHASE 2 - SHIFT TWO WAY TRAFFIC ONTO THE NEW STRUCTURE. CONSTRUCT THE NEW NORTHBOUND STRUCTURE.
SEE TRAFFIC CONTROL PLAN FOR MORE DETAILED INFORMATION.

TEST HOLE AND BORING LEGEND

1. CLAY, black, sandy
2. GRAVEL BOULDERS
3. CLAY, sandy, gravel, brown
4. CLAY, brown, hard
5. SAND, clayey, brown & grey w/traces of gravel
6. CLAY, yellow & grey, very stiff
7. CLAY, sandy, grey & yellow w/trace of limestone, light brown
8. GRAVEL, sandy
9. CLAY, yellow & grey, w/caliche
10. LIMESTONE, light brown, hard w/yellow-grey clay
11. CLAY, tan, w/gravel, moist
12. CLAY, tan, shaley, moist
13. CLAY, tan, silty, sandy, moist
14. CLAY, multi-colored, shaley, w/gravel, moist
15. Clay, multi-colored, shaley, moist
16. CLAY, multi-colored, shaley, w/layer of shale
17. SHALE, multi-colored, hard, moist
18. CLAY, tan, moist
19. CLAY, tan, silty, sandy, w/gravel, moist
20. SHALE, multi-colored, moist
21. SHALE, gray, moist
22. CLAY, multi-colored, w/gravel, moist
23. SHALE, multi-colored, w/shaley clay, moist

LEVELS DISPLAYED																
1	2	3	4	5	6	7	8	9	10	11	12	13	14	15	16	
17	18	19	20	21	22	23	24	25	26	27	28	29	30	31	32	
33	34	35	36	37	38	39	40	41	42	43	44	45	46	47	48	
49	50	51	52	53	54	55	56	57	58	59	60	61	62	63		

FILENAME: pt\67316-03\helb1m03.dgn PLOTTED: 01 MAY 97 18:01:45

STATE OF TEXAS
S. N. AFTAB
80137
REGISTERED PROFESSIONAL ENGINEER

S. Naved Aftab
5/2/97

NO.	DATE	REVISION	APPROV.

Texas Department of Transportation
BRIDGE LAYOUT

NORTHBOUND AND SOUTHBOUND
BRIDGE AT HELOTES CREEK

TYPICAL SECTION

Kimley-Horn and Associates, Inc.

Designed SNA	DIST	FED REG	FEDERAL AID PROJECT =					HIGHWAY
Checked DKK	15	6	CD 2452-01-035					LP1604
Drawn JTK	COUNTY			CONTROL	SECT	JOB		SHEET
Checked SNA	BEXAR			2452	01	035		149

SUMMARY OF ESTIMATED QUANTITIES

ITEM / DESCRIPTION	Drilled Shafts 750 mm	Class 'C' Concrete Abutment	Class 'C' Concrete Bent	Reinforced Concrete Slab	Prestressed Concrete Beam (Type B)	Concrete Surface Treatment	Riprap (Concrete) (Class 'B')	Railing Type SSTR (M)	Sealed Expansion Joint (100mm)	Epoxy Water-Proofing			
	m	m^3	m^3	m^2	m	m^2	m^3	m	m	m^2			
2 - Abutments	108.0	29.0								43.0			
2 - Interior Bents	72.0		36.2							20.6			
1 - 54.000m Pr. Conc. Beam Unit				648.13	321.966	648.13	156.9	118.222	24.190				
NORTHBOUND BRIDGE TOTAL	180.0	29.0	36.2	648.13	321.966	648.13	156.9	118.222	24.190	63.6			
ITEM / DESCRIPTION	Drilled Shafts 750 mm	Class 'C' Concrete Abutment	Class 'C' Concrete Bent	Reinforced Concrete Slab	Prestressed Concrete Beam (Type B)	Concrete Surface Treatment	Riprap (Concrete) (Class 'B')	Railing Type SSTR (M)	Sealed Expansion Joint (100mm)	Epoxy Water-Proofing			
	m	m^3	m^3	m^2	m	m^2	m^3	m	m	m^2			
2 - Abutments	120.0	29.0								43.0			
2 - Interior Bents	78.0		36.0							20.6			
1 - 54.000m Pr. Conc. Beam Unit				647.87	321.840	647.87	233.1	118.179	24.178				
SOUTHBOUND BRIDGE TOTAL	198.0	29.0	36.0	647.87	321.840	647.87	233.1	118.179	24.178	63.6			
TOTAL	378.0	58.0	72.2	1,296.0	643.806	1,296.00	390.0	236.401	48.368	127.2			

BEARING SEAT ELEVATIONS

NORTHBOUND BRIDGE	1	2	3	4	5	6
ABUTMENT 1 (FWD)	277.150	277.237	277.325	277.413	277.500	277.588
BENT 2 (BK)	277.152	277.240	277.328	277.415	277.503	277.591
BENT 2 (FWD)	277.152	277.240	277.328	277.415	277.503	277.591
BENT 3 (BK)	277.155	277.243	277.330	277.418	277.506	277.593
BENT 3 (FWD)	277.155	277.243	277.330	277.418	277.506	277.593
ABUTMENT 4 (BK)	277.158	277.245	277.333	277.421	277.508	277.596

SOUTHBOUND BRIDGE	1	2	3	4	5	6
ABUTMENT 1 (FWD)	278.482	278.570	278.657	278.745	278.833	278.921
BENT 2 (BK)	278.485	278.572	278.660	278.748	278.835	278.923
BENT 2 (FWD)	278.485	278.572	278.660	278.748	278.835	278.923
BENT 3 (BK)	278.487	278.575	278.663	278.750	278.838	278.926
BENT 3 (FWD)	278.487	278.575	278.663	278.750	278.838	278.926
ABUTMENT 4 (BK)	278.490	278.578	278.665	278.753	278.841	278.928

STATE OF TEXAS
S. N. AFTAB
80137
REGISTERED PROFESSIONAL ENGINEER

S. Nawab Aftab
5/2/97

NO.	DATE	REVISION	APPROV.

Texas Department of Transportation
LOOP 1604

NORTHBOUND AND SOUTHBOUND
BRIDGE AT HELOTES CREEK
ESTIMATED QUANTITIES AND
BEARING SEAT ELEVATIONS

Kimley-Horn and Associates, Inc.

Designed SNA	DIST	FED REG	FEDERAL AID PROJECT #					HIGHWAY
Checked DKK	15	6	CD 2452-01-035					LP1604
Drawn JTK	COUNTY			CONTROL	SECT	JOB		SHEET
Checked SNA	BEXAR			2452	01	035		150

FILENAME: p:\67316-03\helt01.dgn PLOTTED: 01 MAY 97 18:02:47
LEVELS DISPLAYED
1 2 3 4 5 6 7 8 9 10 11 12 13 14 15 16
17 18 19 20 21 22 23 24 25 26 27 28 29 30 31 32
33 34 35 36 37 38 39 40 41 42 43 44 45 46 47 48
49 50 51 52 53 54 55 56 57 58 59 60 61 62 63

SUMMARY OF ESTIMATED QUANTITIES

DESCRIPTION / ITEM	Drilled Shafts 750 mm	Class 'C' Concrete Abutment	Class 'C' Concrete Bent	Reinforced Concrete Slab	Prestressed Concrete Beam (Type B)	Concrete Surface Treatment	Riprap (Concrete) (Class 'B')	Railing Type SSTR (M)	Sealed Expansion Joint (100mm)	Epoxy Water-Proofing
	m	m3	m3	m2	m	m2	m3	m	m	m2
2 - Abutments	108.0	29.0								43.0
2 - Interior Bents	72.0		36.2							20.6
1 - 54.000m Pr. Conc. Beam Unit				648.13	322.266	648.13	156.9	118.422	24.190	
NORTHBOUND BRIDGE TOTAL	180.0	29.0	36.2	648.13	322.266	648.13	156.9	118.422	24.190	63.6

DESCRIPTION / ITEM	Drilled Shafts 750 mm	Class 'C' Concrete Abutment	Class 'C' Concrete Bent	Reinforced Concrete Slab	Prestressed Concrete Beam (Type B)	Concrete Surface Treatment	Riprap (Concrete) (Class 'B')	Railing Type SSTR (M)	Sealed Expansion Joint (100mm)	Epoxy Water-Proofing
	m	m3	m3	m2	m	m2	m3	m	m	m2
2 - Abutments	120.0	29.0								43.0
2 - Interior Bents	78.0		36.0							20.6
1 - 54.000m Pr. Conc. Beam Unit				647.87	322.140	647.87	233.1	118.379	24.178	
SOUTHBOUND BRIDGE TOTAL	198.0	29.0	36.0	647.87	322.140	647.87	233.1	118.379	24.178	63.6
TOTAL	378.0	58.0	72.2	1,296.0	644.406	1,296.00	390.0	236.801	48.368	127.2

BEARING SEAT ELEVATIONS

NORTHBOUND BRIDGE	1	2	3	4	5	6
ABUTMENT 1 (FWD)	277.150	277.237	277.325	277.413	277.500	277.588
BENT 2 (BK)	277.152	277.240	277.328	277.415	277.503	277.591
BENT 2 (FWD)	277.152	277.240	277.328	277.415	277.503	277.591
BENT 3 (BK)	277.155	277.243	277.330	277.418	277.506	277.593
BENT 3 (FWD)	277.155	277.243	277.330	277.418	277.506	277.593
ABUTMENT 4 (BK)	277.158	277.245	277.333	277.421	277.508	277.596

SOUTHBOUND BRIDGE	1	2	3	4	5	6
ABUTMENT 1 (FWD)	278.482	278.570	278.657	278.745	278.833	278.921
BENT 2 (BK)	278.485	278.572	278.660	278.748	278.835	278.923
BENT 2 (FWD)	278.485	278.572	278.660	278.748	278.835	278.923
BENT 3 (BK)	278.487	278.575	278.663	278.750	278.838	278.926
BENT 3 (FWD)	278.487	278.575	278.663	278.750	278.838	278.926
ABUTMENT 4 (BK)	278.490	278.578	278.665	278.753	278.841	278.928

STATE OF TEXAS
S. N. AFTAB
80137
REGISTERED PROFESSIONAL ENGINEER

S. Naval Aftab
1/5/98

NO.	DATE	REVISION	APPROV.
1	1/5/98	Revised Beam & Rail Quantities	SNA

Texas Department of Transportation
LOOP 1604

NORTHBOUND AND SOUTHBOUND BRIDGE AT HELOTES CREEK
ESTIMATED QUANTITIES AND BEARING SEAT ELEVATIONS

Kimley-Horn and Associates, Inc.

Designed SNA	DIST	FED RED	FEDERAL AID PROJECT #				HIGHWAY
Checked DKK	15	6	CD 2452-01-035				LP1604
Drawn JTK	COUNTY		CONTROL	SECT	JOB	SHEET	
Checked SNA	BEXAR		2452	01	035	150	A

Change Order No. 3 4 OF 4

LEVELS DISPLAYED

FILENAME: g:\67316-03\helt101.dgn PLOTTED: 05 JAN 98 15:24:15

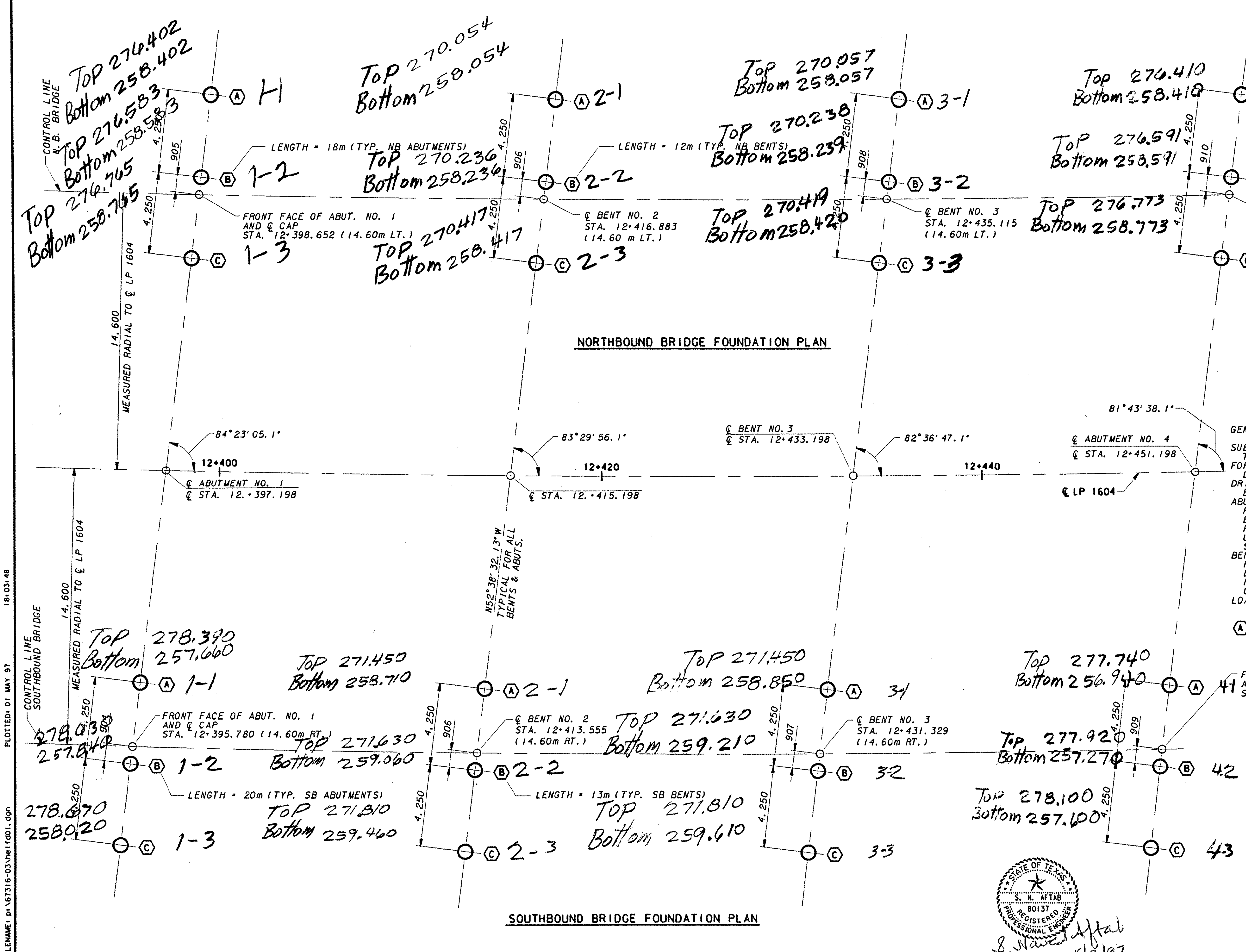

GENERAL NOTES:

SUBSTRUCTURE SKEW ANGLES ARE MEASURED AT THE LOCAL TANGENT ALONG ℄ LP 1604.
FOR BORING LOG INFORMATION, SEE BRIDGE LAYOUTS, SHEETS 147-149.
DRILLED SHAFTS ARE DESIGNED FOR END BEARING IN UNWEATHERED ROCK.
ABUTMENT NO. 1 & 4 DRILLED SHAFTS SHALL BE FOUNDED AT THE ELEVATIONS SHOWN ON THE BRIDGE LAYOUTS OR LOWER, AS NECESSARY, TO PENETRATE A MINIMUM OF 1.5m INTO UNWEATHERED ROCK. THE MAXIMUM DRILLED SHAFT LOAD IS 670kN.
BENT NO. 2 & 3 DRILLED SHAFTS SHALL BE FOUNDED AT THE ELEVATIONS SHOWN ON THE BRIDGE LAYOUTS OR LOWER, AS NECESSARY, TO PENETRATE A MINIMUM OF 1.5m INTO UNWEATHERED ROCK. MAXIMUM DRILLED SHAFT LOAD IS 1,340kN.

(A) - DENOTES THE DRILLED SHAFT NUMBER

NO.	DATE	REVISION	APPROV.

Texas Department of Transportation
LOOP 1604

NORTHBOUND AND SOUTHBOUND BRIDGE AT HELOTES CREEK

FOUNDATION PLAN

Kimley-Horn and Associates, Inc.

Designed SNA	DIST	FED REG	FEDERAL AID PROJECT •				HIGHWAY
Checked DKK	15	6	CD 2452-01-035				LP1604
Drawn JTK	COUNTY			CONTROL	SECT	JOB	SHEET
Checked SNA	BEXAR			2452	01	035	151

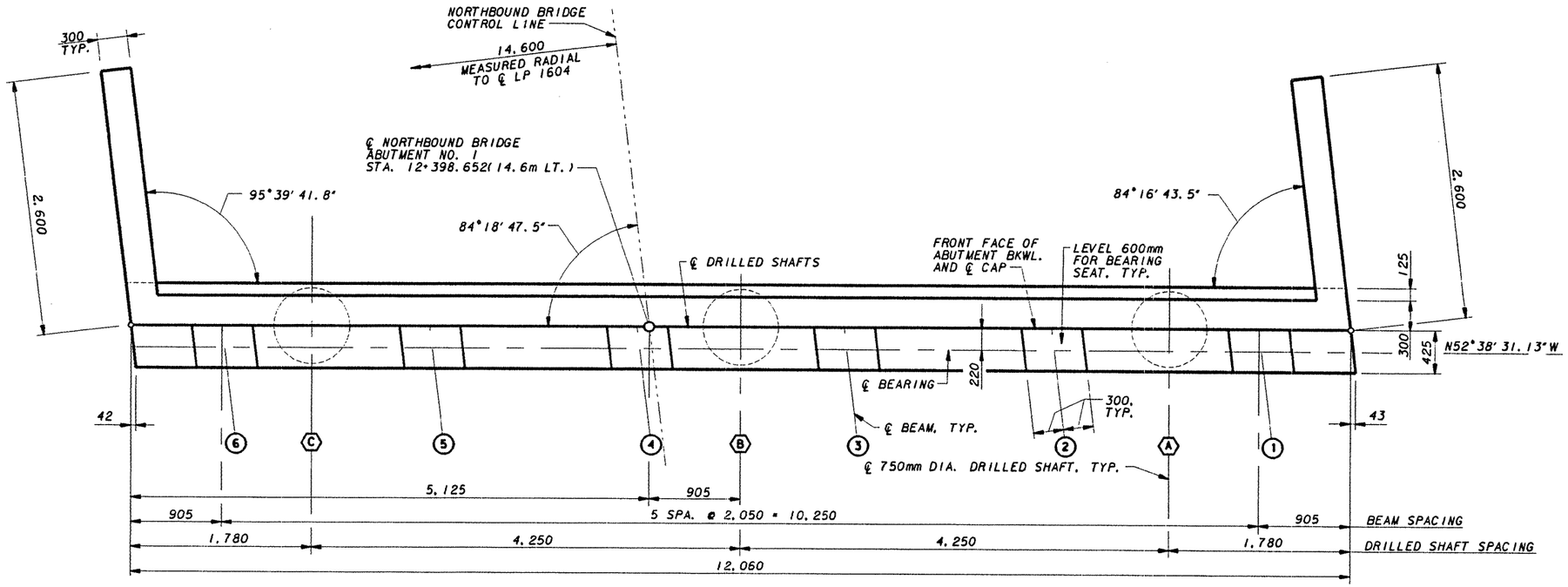

PLAN

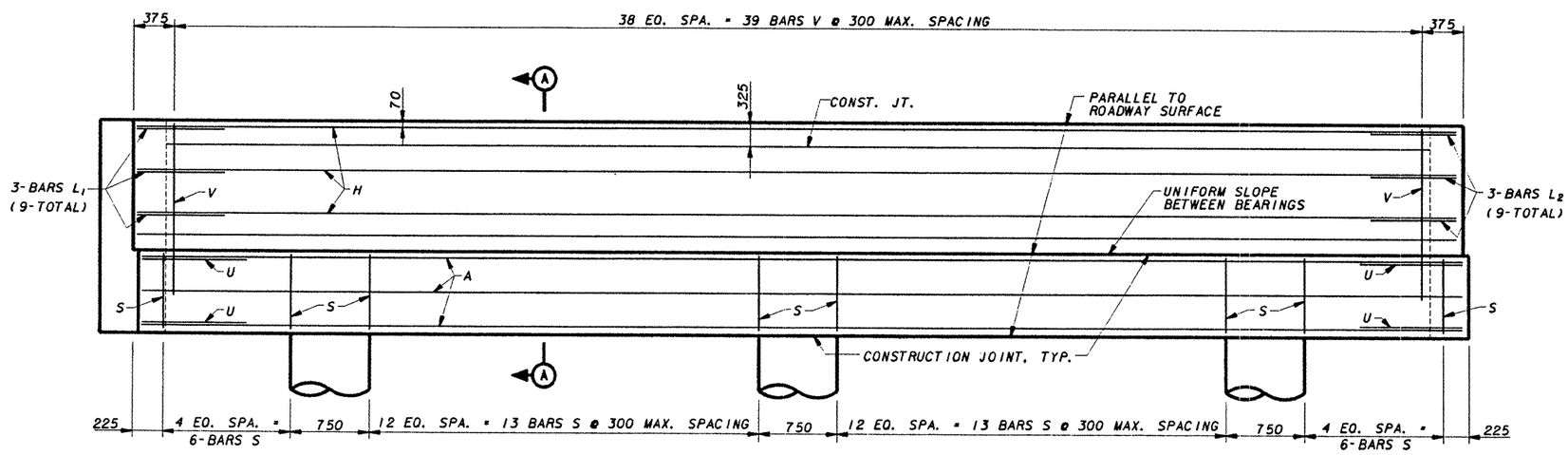

ELEVATION

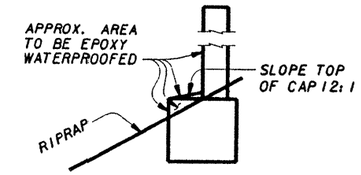

WATERPROOFING DETAIL

NOTE:

THE FACE OF BACKWALL AND THE TOP, FRONT, & ENDS OF THE CAP AS SHOWN, EXCEPT BEARING SEATS, SHALL BE WATERPROOFED AS PER ITEM, "EPOXY WATERPROOFING".

GENERAL NOTES:

DESIGNED ACCORDING TO AASHTO "STANDARD SPECIFICATIONS FOR HIGHWAY BRIDGES", 1996, FOR A MS18 LOADING.
HORIZONTAL DIMENSIONS ARE SHOWN AND MUST BE CORRECTED FOR GRADE AND CROSS SLOPE, WHERE APPROPRIATE.
ALL CAST-IN-PLACE CONCRETE TO BE CLASS C. DESIGN f'c = 25 MPa.
CHAMFER ALL EXPOSED CONCRETE EDGES 20mm, UNLESS OTHERWISE SHOWN.
REINFORCING STEEL SHALL BE ASTM A-615, GRADE 420, EXCEPT AS NOTED.
DRILLED SHAFTS ARE DESIGNED FOR END BEARING IN GRAY, UNWEATHERED LIMESTONE. DRILLED SHAFTS SHALL BE FOUNDED AT THE ELEVATIONS SHOWN OR LOWER, AS NECESSARY, TO PENETRATE A MINIMUM OF 1.5m INTO UNWEATHERED ROCK.
FOR LENGTH OF DRILLED SHAFTS AND LOADS, SEE FOUNDATION PLAN SHEET 151.
SEE SEJ-A (M) STANDARD SHEET FOR DETAILS TO BE PLACED WITH ABUTMENT.
FOR BEAM SKEW ANGLES, SEE FRAMING PLAN SHEET 162.
FOR BEARING SEAT ELEVATIONS, SEE ESTIMATED QUANTITY SUMMARY SHEET 150.
FOR ABUTMENT SECTIONS AND DETAILS, BILL OF REINFORCING STEEL, AND ESTIMATED SUMMARY, SEE SHEET 156.

(1) - DENOTES THE BEAM NUMBER

(A) - DENOTES THE DRILLED SHAFT NUMBER

NO.	DATE	REVISION	APPROV.

Texas Department of Transportation
LOOP 1604

NORTHBOUND BRIDGE
AT HELOTES CREEK

ABUTMENT NO. 1 DETAILS

Kimley-Horn and Associates, Inc.

STATE OF TEXAS
S. N. AFTAB
80137
REGISTERED PROFESSIONAL ENGINEER

S. Nawab Aftab
5/2/97

Designed SNA	DIST	FED REG	FEDERAL AID PROJECT #			HIGHWAY
Checked DKK	15	6	CD 2452-01-035			LP1604
Drawn JTK	COUNTY		CONTROL	SECT	JOB	SHEET
Checked SNA	BEXAR		2452	01	035	152

1 OF 5

LEVELS DISPLAYED

1	2	3	4	5	6	7	8	9	10	11	12	13	14	15	16
17	18	19	20	21	22	23	24	25	26	27	28	29	30	31	32
33	34	35	36	37	38	39	40	41	42	43	44	45	46	47	48
49	50	51	52	53	54	55	56	57	58	59	60	61	62	63	

FILENAME: pr\67316-03\helob01.dgn PLOTTED: 01 MAY 97 18:05:27

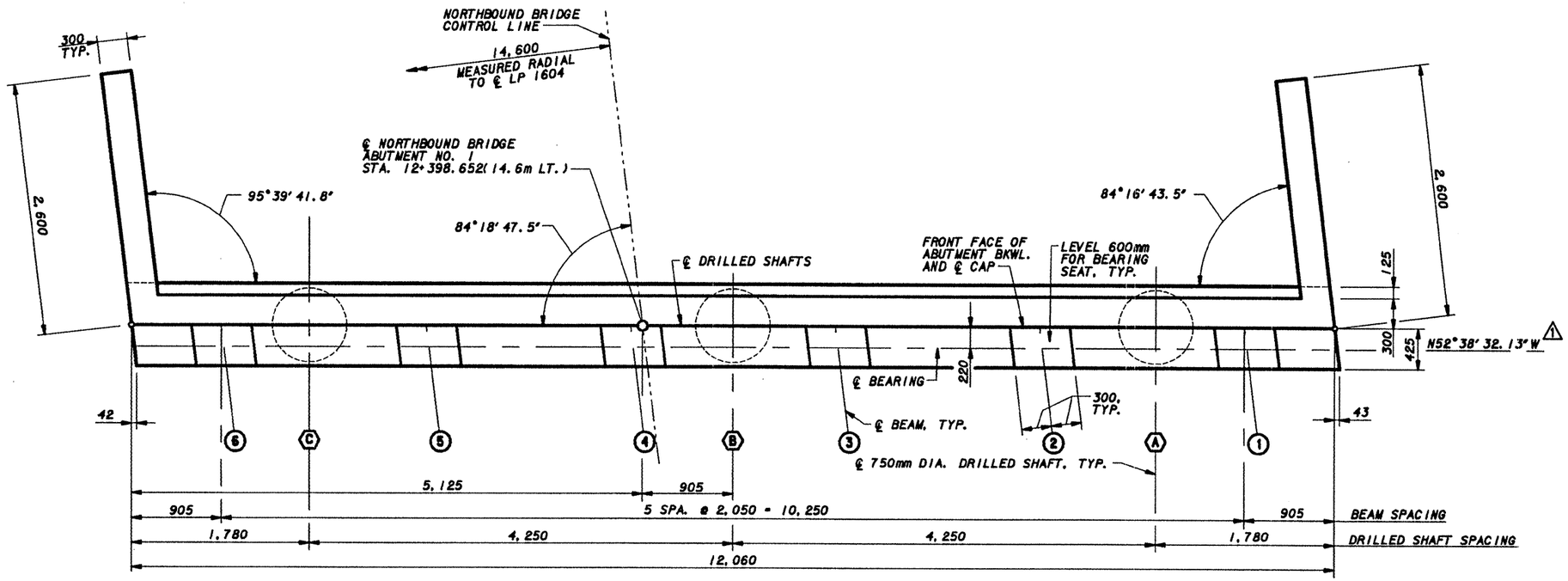

PLAN

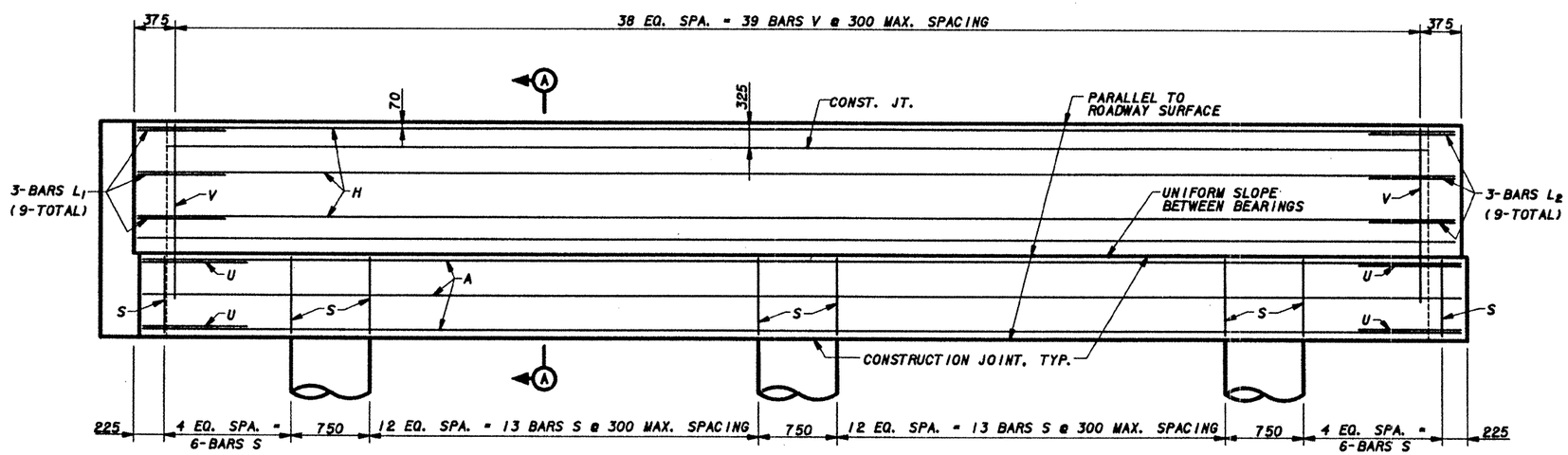

ELEVATION

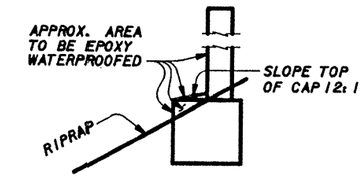

WATERPROOFING DETAIL

NOTE:

THE FACE OF BACKWALL AND THE TOP, FRONT, & ENDS OF THE CAP AS SHOWN, EXCEPT BEARING SEATS, SHALL BE WATERPROOFED AS PER ITEM, "EPOXY WATERPROOFING".

GENERAL NOTES:

DESIGNED ACCORDING TO AASHTO "STANDARD SPECIFICATIONS FOR HIGHWAY BRIDGES", 1996, FOR A MS18 LOADING.
HORIZONTAL DIMENSIONS ARE SHOWN AND MUST BE CORRECTED FOR GRADE AND CROSS SLOPE, WHERE APPROPRIATE.
ALL CAST-IN-PLACE CONCRETE TO BE CLASS C. DESIGN f'c = 25 MPa.
CHAMFER ALL EXPOSED CONCRETE EDGES 20mm, UNLESS OTHERWISE SHOWN.
REINFORCING STEEL SHALL BE ASTM A-615, GRADE 420, EXCEPT AS NOTED.
DRILLED SHAFTS ARE DESIGNED FOR END BEARING IN GRAY, UNWEATHERED LIMESTONE. DRILLED SHAFTS SHALL BE FOUNDED AT THE ELEVATIONS SHOWN OR LOWER, AS NECESSARY, TO PENETRATE A MINIMUM OF 1.5m INTO UNWEATHERED ROCK.
FOR LENGTH OF DRILLED SHAFTS AND LOADS, SEE FOUNDATION PLAN SHEET 151.
SEE SEJ-A (M) STANDARD SHEET FOR DETAILS TO BE PLACED WITH ABUTMENT.
FOR BEAM SKEW ANGLES, SEE FRAMING PLAN SHEET 162.
FOR BEARING SEAT ELEVATIONS, SEE ESTIMATED QUANTITY SUMMARY SHEET 150.
FOR ABUTMENT SECTIONS AND DETAILS, BILL OF REINFORCING STEEL, AND ESTIMATED SUMMARY, SEE SHEET 156.

(1) - DENOTES THE BEAM NUMBER
(A) - DENOTES THE DRILLED SHAFT NUMBER

NO.	DATE	REVISION	APPROV.
1	1/5/98	Revised Bearing of Abutment	SNA

Texas Department of Transportation
LOOP 1604

NORTHBOUND BRIDGE
AT HELOTES CREEK

ABUTMENT NO. 1 DETAILS

Kimley-Horn and Associates, Inc.

Designed SNA	DIST	FED RDS	FEDERAL AID PROJECT #				HIGHWAY
Checked DKK	15	6	CD 2452-01-035				LP1604
Drawn JTK	COUNTY		CONTROL	SECT	JOB	SHEET	
Checked SNA	BEXAR		2452	01	035	152	A

STATE OF TEXAS
S. N. AFTAB
80137
REGISTERED PROFESSIONAL ENGINEER

S. Naved Aftab
1/5/98

Change Order No. 31 OF 5

FILENAME: g:\67316-03\helab01.dgn PLOTTED: 05 JAN 98 15:06:01

LEVELS DISPLAYED

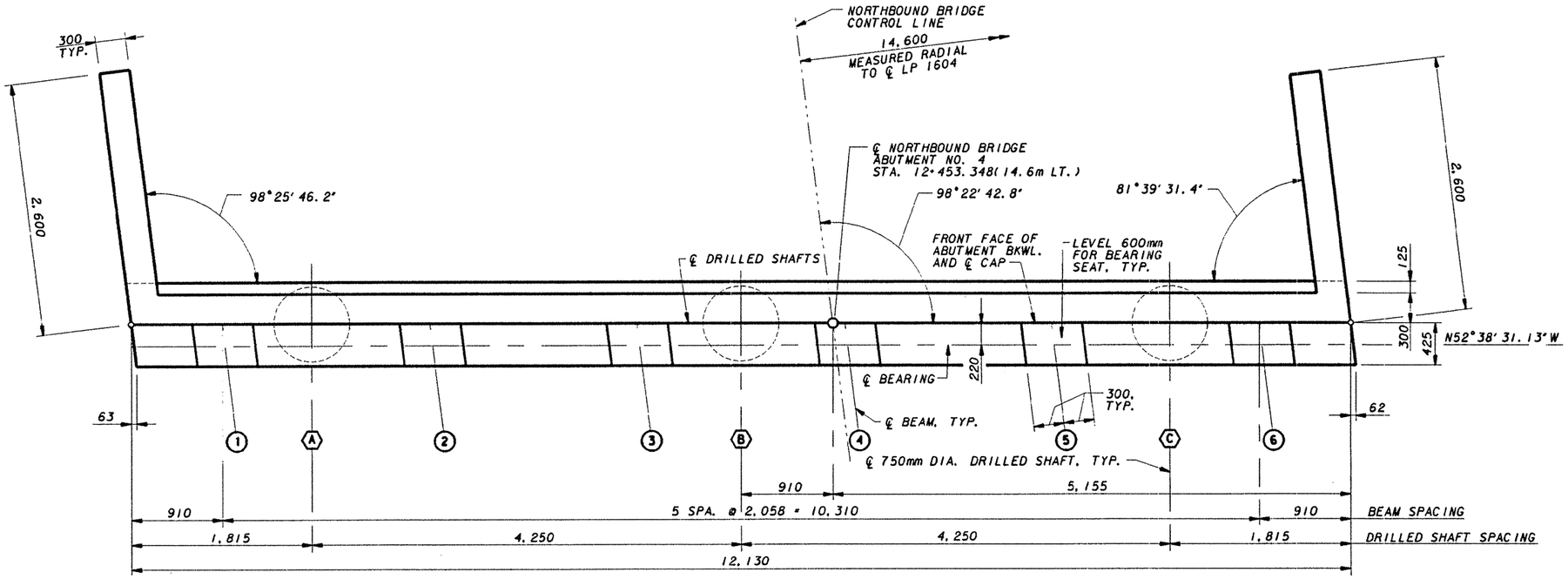

PLAN

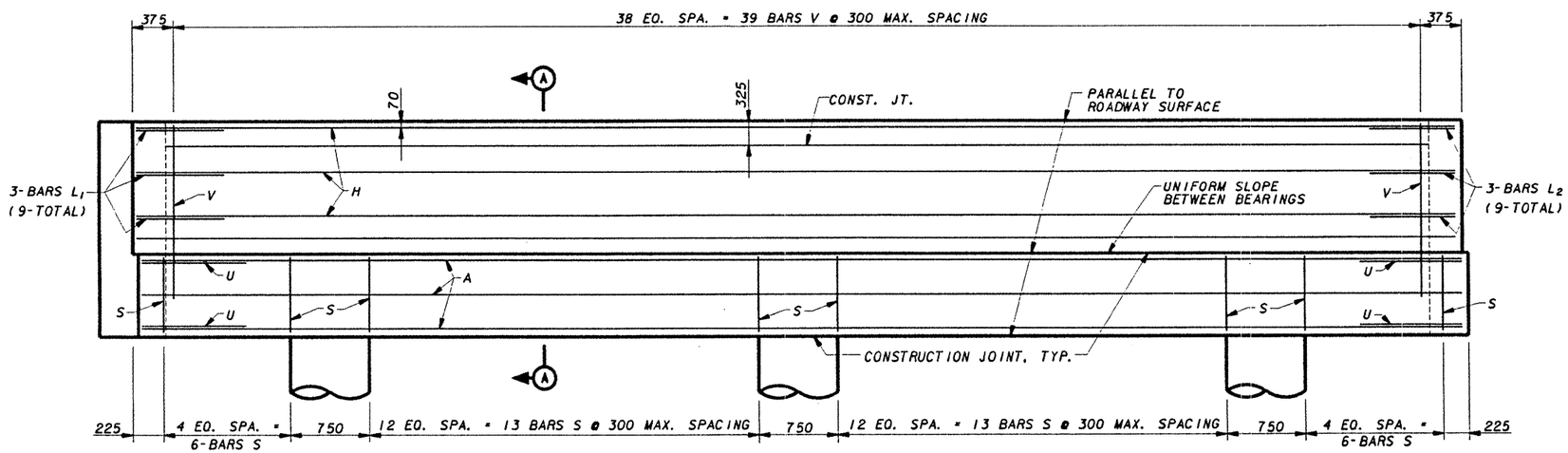

ELEVATION

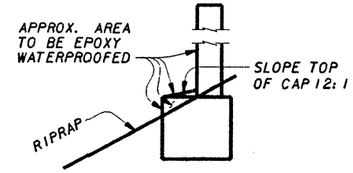

WATERPROOFING DETAIL

NOTE:

THE FACE OF BACKWALL AND THE TOP, FRONT, & ENDS OF THE CAP AS SHOWN, EXCEPT BEARING SEATS, SHALL BE WATERPROOFED AS PER ITEM, "EPOXY WATERPROOFING".

GENERAL NOTES:

DESIGNED ACCORDING TO AASHTO "STANDARD SPECIFICATIONS FOR HIGHWAY BRIDGES", 1996, FOR A MS18 LOADING.
HORIZONTAL DIMENSIONS ARE SHOWN AND MUST BE CORRECTED FOR GRADE AND CROSS SLOPE, WHERE APPROPRIATE.
ALL CAST-IN-PLACE CONCRETE TO BE CLASS C. DESIGN f'c = 25 MPa.
CHAMFER ALL EXPOSED CONCRETE EDGES 20mm, UNLESS OTHERWISE SHOWN.
REINFORCING STEEL SHALL BE ASTM A-615, GRADE 420, EXCEPT AS NOTED.
DRILLED SHAFTS ARE DESIGNED FOR END BEARING IN GRAY, UNWEATHERED LIMESTONE. DRILLED SHAFTS SHALL BE FOUNDED AT THE ELEVATIONS SHOWN OR LOWER, AS NECESSARY, TO PENETRATE A MINIMUM OF 1.5m INTO UNWEATHERED ROCK.
FOR LENGTH OF DRILLED SHAFTS AND LOADS, SEE FOUNDATION PLAN SHEET 151.
SEE SEJ-A (W) STANDARD SHEET FOR DETAILS TO BE PLACED WITH ABUTMENT.
FOR BEAM SKEW ANGLES, SEE FRAMING PLAN SHEET 162.
FOR BEARING SEAT ELEVATIONS, SEE ESTIMATED QUANTITY SUMMARY SHEET 150.
FOR ABUTMENT SECTIONS AND DETAILS, BILL OF REINFORCING STEEL, AND ESTIMATED SUMMARY, SEE SHEET 156.

(1) - DENOTES THE BEAM NUMBER

(A) - DENOTES THE DRILLED SHAFT NUMBER

NO.	DATE	REVISION	APPROV.

Texas Department of Transportation
LOOP 1604

NORTHBOUND BRIDGE
AT HELOTES CREEK

ABUTMENT NO. 4 DETAILS

Kimley-Horn and Associates, Inc.

STATE OF TEXAS
S. N. AFTAB
80137
REGISTERED PROFESSIONAL ENGINEER

S. Nawed Aftab
5/2/97

Designed SNA	DIST	FED REG	FEDERAL AID PROJECT #			HIGHWAY
Checked DKK	15	6	CD 2452-01-035			LP1604
Drawn JTK	COUNTY		CONTROL	SECT	JOB	SHEET
Checked SNA	BEXAR		2452	01	035	153

2 OF 5

FILENAME: p:\67316-03\hel06b02.dgn PLOTTED: 01 MAY 97 18:07:04

LEVELS DISPLAYED

1	2	3	4	5	6	7	8	9	10	11	12	13	14	15	16
17	18	19	20	21	22	23	24	25	26	27	28	29	30	31	32
33	34	35	36	37	38	39	40	41	42	43	44	45	46	47	48
49	50	51	52	53	54	55	56	57	58	59	60	61	62	63	

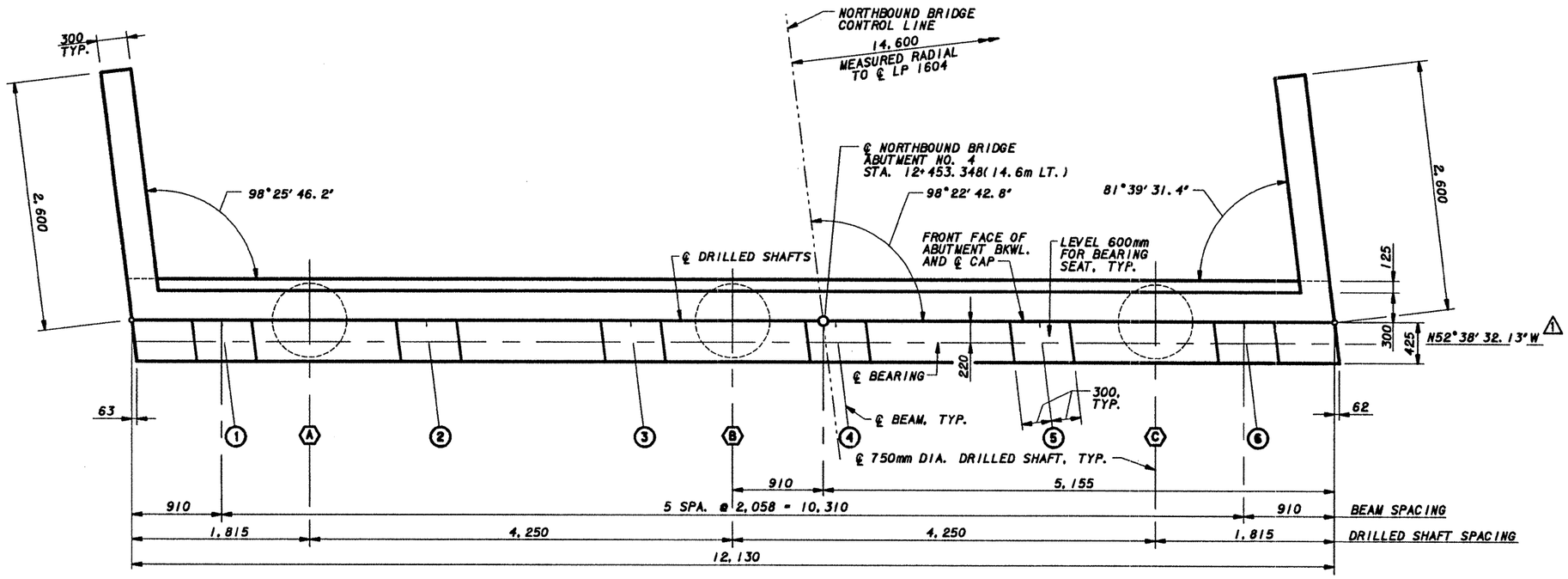

PLAN

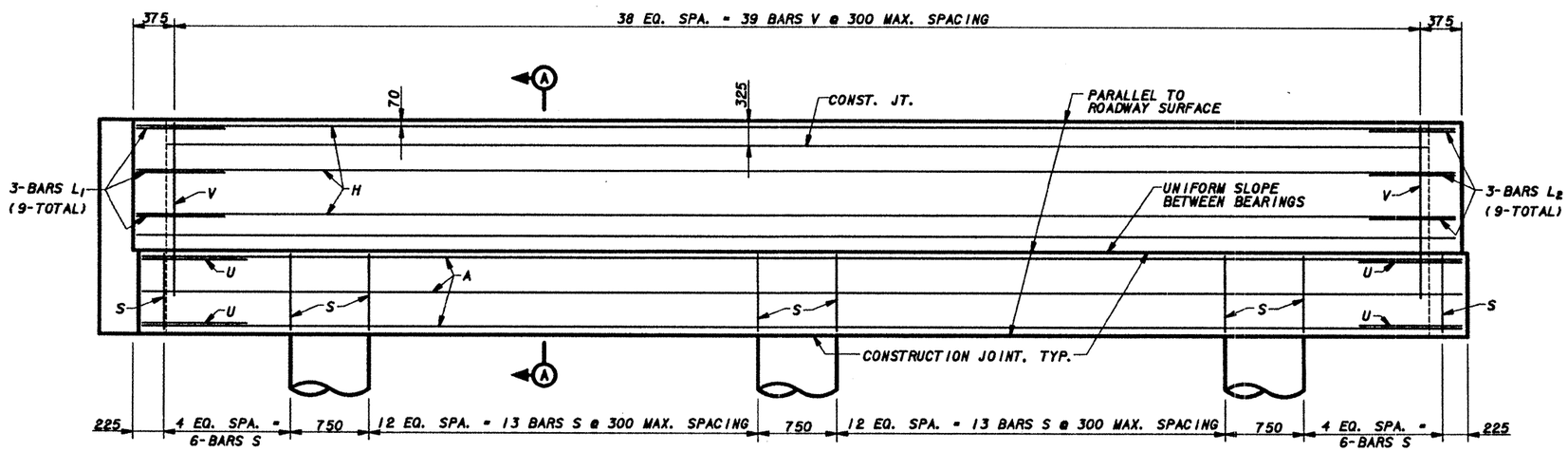

ELEVATION

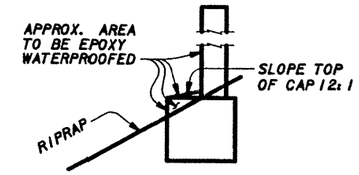

WATERPROOFING DETAIL

NOTE:

THE FACE OF BACKWALL AND THE TOP, FRONT, & ENDS OF THE CAP AS SHOWN, EXCEPT BEARING SEATS, SHALL BE WATERPROOFED AS PER ITEM, "EPOXY WATERPROOFING".

GENERAL NOTES:

DESIGNED ACCORDING TO AASHTO "STANDARD SPECIFICATIONS FOR HIGHWAY BRIDGES", 1996, FOR A MS18 LOADING.
HORIZONTAL DIMENSIONS ARE SHOWN AND MUST BE CORRECTED FOR GRADE AND CROSS SLOPE, WHERE APPROPRIATE.
ALL CAST-IN-PLACE CONCRETE TO BE CLASS C. DESIGN f'c = 25 MPa.
CHAMFER ALL EXPOSED CONCRETE EDGES 20mm, UNLESS OTHERWISE SHOWN.
REINFORCING STEEL SHALL BE ASTM A-615, GRADE 420, EXCEPT AS NOTED.
DRILLED SHAFTS ARE DESIGNED FOR END BEARING IN GRAY, UNWEATHERED LIMESTONE. DRILLED SHAFTS SHALL BE FOUNDED AT THE ELEVATIONS SHOWN OR LOWER, AS NECESSARY, TO PENETRATE A MINIMUM OF 1.5m INTO UNWEATHERED ROCK.
FOR LENGTH OF DRILLED SHAFTS AND LOADS, SEE FOUNDATION PLAN SHEET 151.
SEE SEJ-A (M) STANDARD SHEET FOR DETAILS TO BE PLACED WITH ABUTMENT.
FOR BEAM SKEW ANGLES, SEE FRAMING PLAN SHEET 162.
FOR BEARING SEAT ELEVATIONS, SEE ESTIMATED QUANTITY SUMMARY SHEET 150.
FOR ABUTMENT SECTIONS AND DETAILS, BILL OF REINFORCING STEEL, AND ESTIMATED SUMMARY, SEE SHEET 156.

(1) - DENOTES THE BEAM NUMBER
(A) - DENOTES THE DRILLED SHAFT NUMBER

NO.	DATE	REVISION	APPROV.
1	1/5/98	Revised Bearing of Abutment	SNA

Texas Department of Transportation
LOOP 1604

NORTHBOUND BRIDGE
AT HELOTES CREEK

ABUTMENT NO. 4 DETAILS

Kimley-Horn and Associates, Inc.

Designed SNA	DIST	FED RDS	FEDERAL AID PROJECT #				HIGHWAY	
Checked DKK	15	6	CD 2452-01-035				LP1604	
Drawn JTK	COUNTY			CONTROL	SECT	JOB	SHEET	
Checked SNA	BEXAR			2452	01	035	153	

2 OF 5

STATE OF TEXAS — S. N. AFTAB — 80137 — REGISTERED PROFESSIONAL ENGINEER

Change Order No. 3 S. Nawed Aftab 1/5/98

FILENAME: pw:\67316-03\hwldb02.dgn PLOTTED: 05 JAN 98 15:12:35

LEVELS DISPLAYED

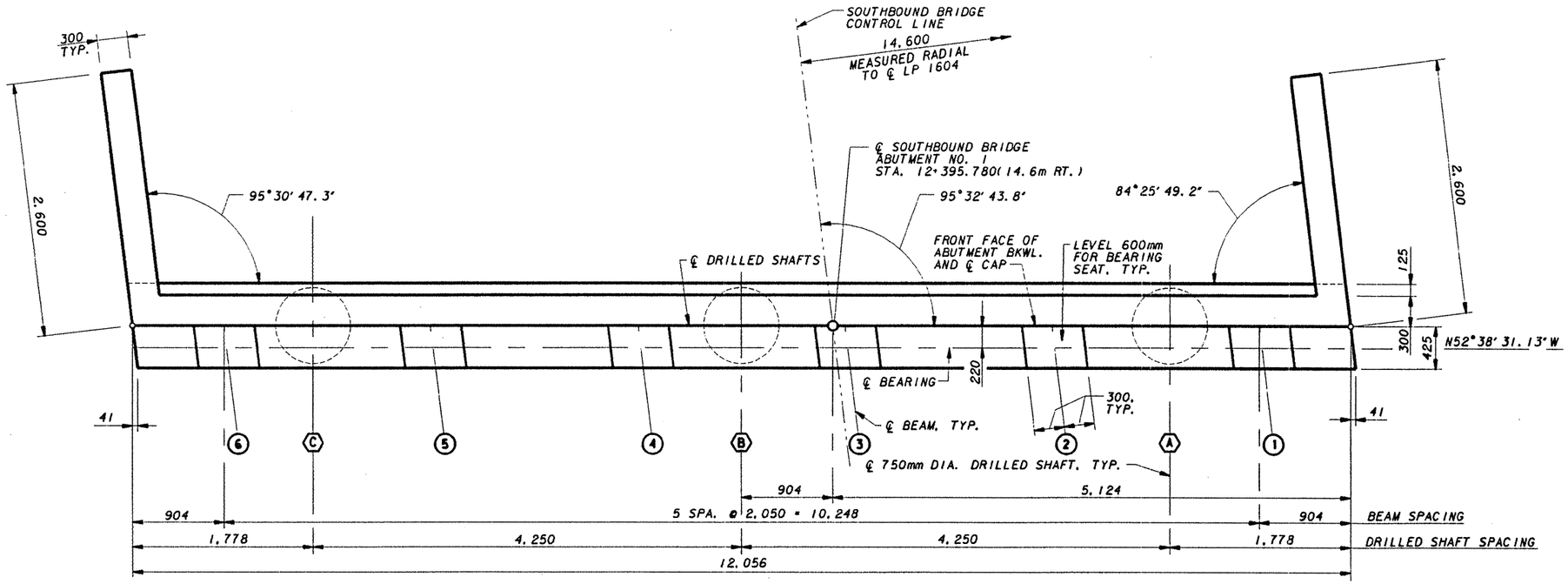

PLAN

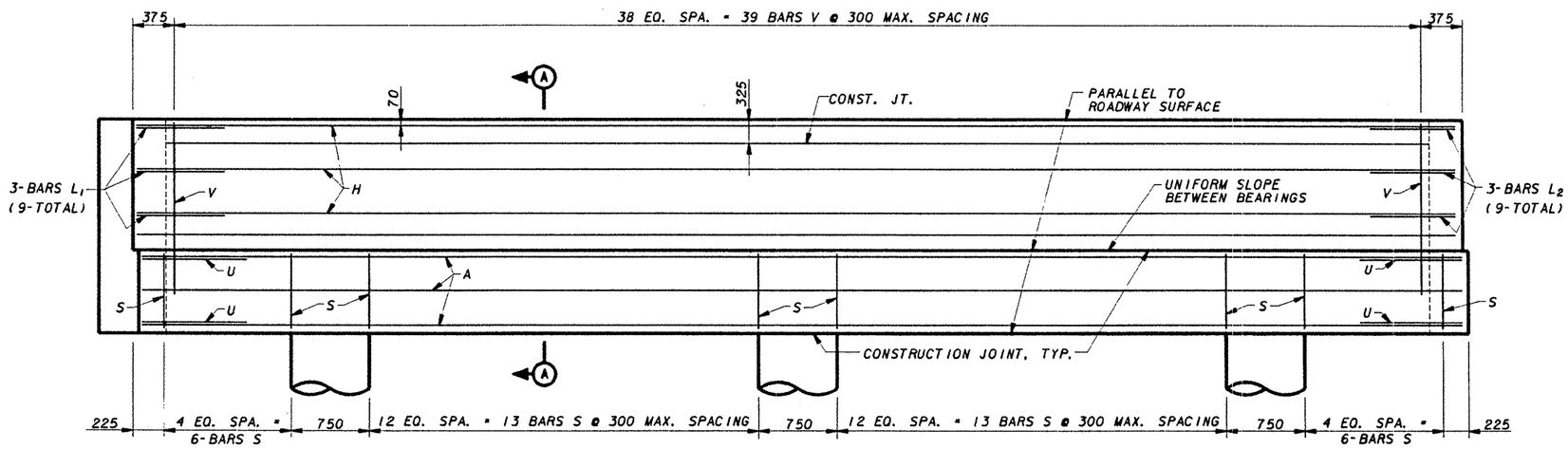

ELEVATION

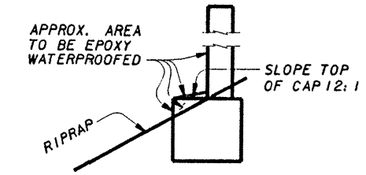

WATERPROOFING DETAIL

NOTE:

THE FACE OF BACKWALL AND THE TOP, FRONT, & ENDS OF THE CAP AS SHOWN, EXCEPT BEARING SEATS, SHALL BE WATERPROOFED AS PER ITEM, "EPOXY WATERPROOFING".

GENERAL NOTES:

DESIGNED ACCORDING TO AASHTO "STANDARD SPECIFICATIONS FOR HIGHWAY BRIDGES", 1996, FOR A MS18 LOADING.
HORIZONTAL DIMENSIONS ARE SHOWN AND MUST BE CORRECTED FOR GRADE AND CROSS SLOPE, WHERE APPROPRIATE.
ALL CAST-IN-PLACE CONCRETE TO BE CLASS C. DESIGN f'c = 25 MPa.
CHAMFER ALL EXPOSED CONCRETE EDGES 20mm, UNLESS OTHERWISE SHOWN.
REINFORCING STEEL SHALL BE ASTM A-615, GRADE 420, EXCEPT AS NOTED.
DRILLED SHAFTS ARE DESIGNED FOR END BEARING IN GRAY, UNWEATHERED LIMESTONE. DRILLED SHAFTS SHALL BE FOUNDED AT THE ELEVATIONS SHOWN OR LOWER, AS NECESSARY, TO PENETRATE A MINIMUM OF 1.5m INTO UNWEATHERED ROCK.
FOR LENGTH OF DRILLED SHAFTS AND LOADS, SEE FOUNDATION PLAN SHEET 151.
SEE SEJ-A (M) STANDARD SHEET FOR DETAILS TO BE PLACED WITH ABUTMENT.
FOR BEAM SKEW ANGLES, SEE FRAMING PLAN SHEET 162.
FOR BEARING SEAT ELEVATIONS, SEE ESTIMATED QUANTITY SUMMARY SHEET 150.
FOR ABUTMENT SECTIONS AND DETAILS, BILL OF REINFORCING STEEL, AND ESTIMATED SUMMARY, SEE SHEET 156.

(1) - DENOTES THE BEAM NUMBER
(A) - DENOTES THE DRILLED SHAFT NUMBER

STATE OF TEXAS
S. N. AFTAB
80137
REGISTERED PROFESSIONAL ENGINEER

S. Nawaz Aftab
5/2/97

NO.	DATE	REVISION	APPROV.

Texas Department of Transportation
LOOP 1604

SOUTHBOUND BRIDGE AT HELOTES CREEK
ABUTMENT NO. 1 DETAILS

Kimley-Horn and Associates, Inc.

Designed	SNA	DIST	FED REG	FEDERAL AID PROJECT #				HIGHWAY
Checked	DKK	15	6	CD 2452-01-035				LP1604
Drawn	JTK	COUNTY			CONTROL	SECT	JOB	SHEET
Checked	SNA	BEXAR			2452	01	035	154

3 OF 5

FILENAME: pr\67316-03\hel0803.dgn PLOTTED: 01 MAY 97 18:08:17

LEVELS DISPLAYED
1 2 3 4 5 6 7 8 9 10 11 12 13 14 15 16
17 18 19 20 21 22 23 24 25 26 27 28 29 30 31 32
33 34 35 36 37 38 39 40 41 42 43 44 45 46 47 48
49 50 51 52 53 54 55 56 57 58 59 60 61 62 63

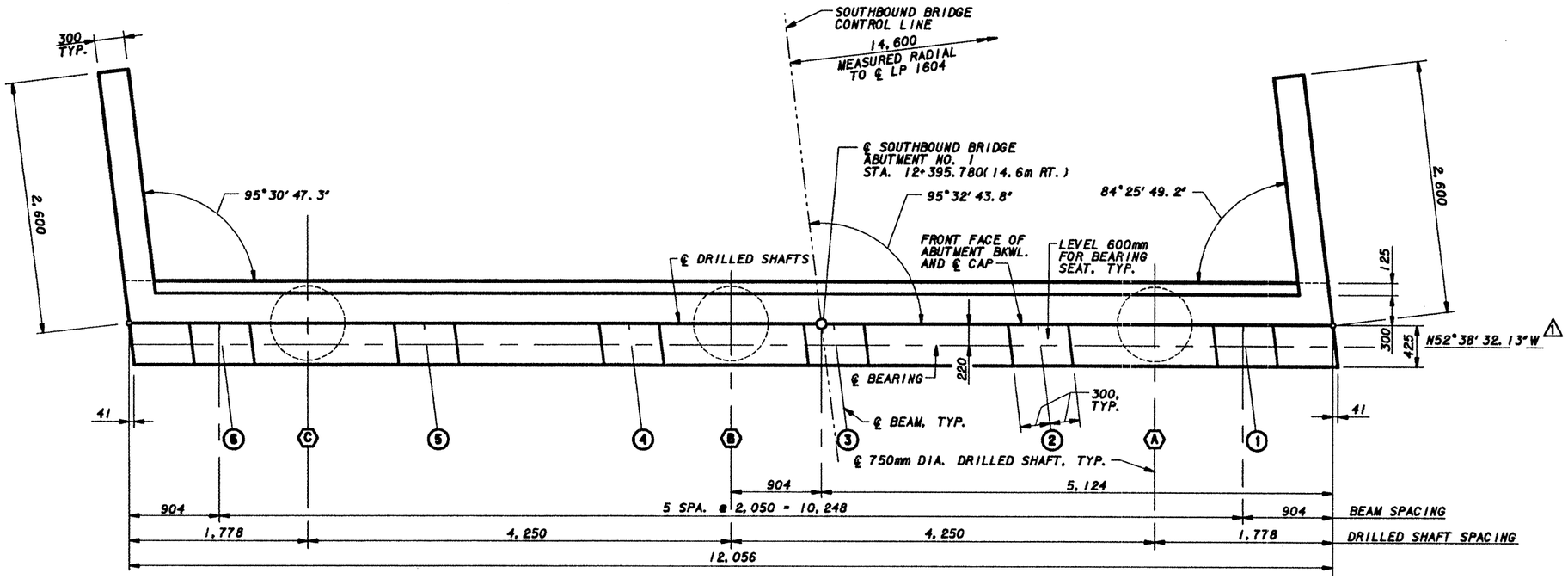

PLAN

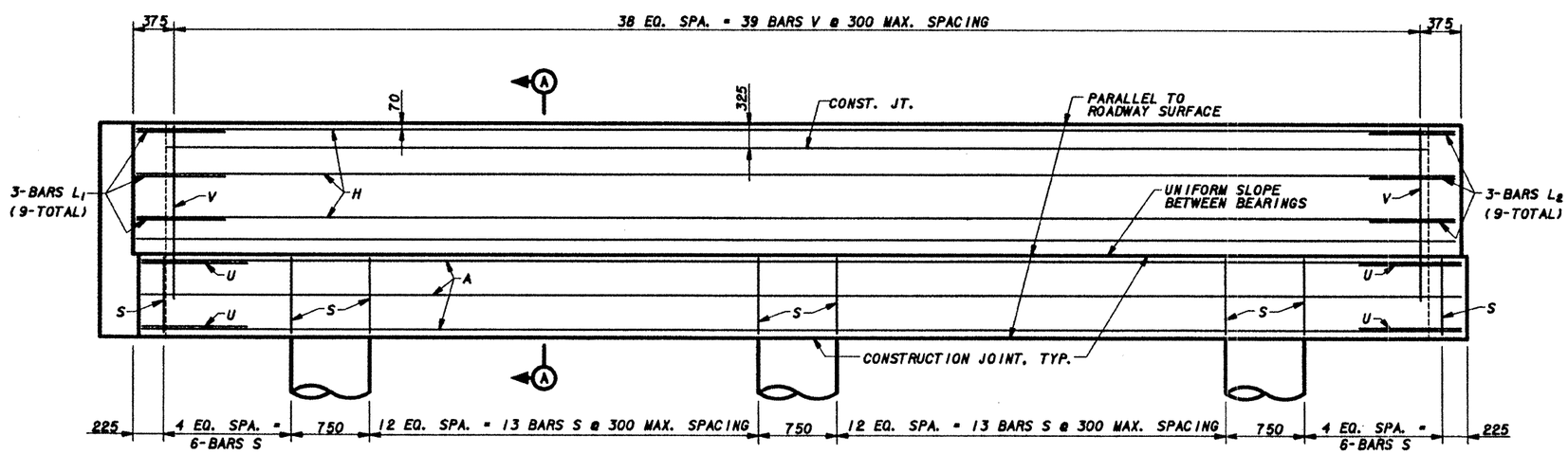

ELEVATION

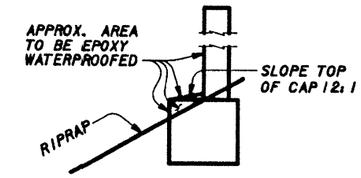

WATERPROOFING DETAIL

NOTE:

THE FACE OF BACKWALL AND THE TOP, FRONT, & ENDS OF THE CAP AS SHOWN, EXCEPT BEARING SEATS, SHALL BE WATERPROOFED AS PER ITEM, "EPOXY WATERPROOFING".

GENERAL NOTES:

DESIGNED ACCORDING TO AASHTO "STANDARD SPECIFICATIONS FOR HIGHWAY BRIDGES", 1996, FOR A MS18 LOADING.
HORIZONTAL DIMENSIONS ARE SHOWN AND MUST BE CORRECTED FOR GRADE AND CROSS SLOPE, WHERE APPROPRIATE.
ALL CAST-IN-PLACE CONCRETE TO BE CLASS C. DESIGN f'c = 25 MPa.
CHAMFER ALL EXPOSED CONCRETE EDGES 20mm, UNLESS OTHERWISE SHOWN.
REINFORCING STEEL SHALL BE ASTM A-615, GRADE 420, EXCEPT AS NOTED.
DRILLED SHAFTS ARE DESIGNED FOR END BEARING IN GRAY, UNWEATHERED LIMESTONE. DRILLED SHAFTS SHALL BE FOUNDED AT THE ELEVATIONS SHOWN OR LOWER, AS NECESSARY, TO PENETRATE A MINIMUM OF 1.5m INTO UNWEATHERED ROCK.
FOR LENGTH OF DRILLED SHAFTS AND LOADS, SEE FOUNDATION PLAN SHEET 151.
SEE SEJ-A (M) STANDARD SHEET FOR DETAILS TO BE PLACED WITH ABUTMENT.
FOR BEAM SKEW ANGLES, SEE FRAMING PLAN SHEET 162.
FOR BEARING SEAT ELEVATIONS, SEE ESTIMATED QUANTITY SUMMARY SHEET 150.
FOR ABUTMENT SECTIONS AND DETAILS, BILL OF REINFORCING STEEL, AND ESTIMATED SUMMARY, SEE SHEET 156.

(1) - DENOTES THE BEAM NUMBER
(A) - DENOTES THE DRILLED SHAFT NUMBER

NO.	DATE	REVISION	APPROV.
1	1/5/98	Revised Bearing of Abutment	SNA

Texas Department of Transportation
LOOP 1604

SOUTHBOUND BRIDGE AT HELOTES CREEK

ABUTMENT NO. 1 DETAILS

Kimley-Horn and Associates, Inc.

Designed SNA	DIST	FED RED	FEDERAL AID PROJECT #					HIGHWAY
Checked DKK	15	6	CD 2452-01-035					LP1604
Drawn JTK	COUNTY			CONTROL	SECT	JOB		SHEET
Checked SNA	BEXAR			2452	01	035		154

STATE OF TEXAS
S. N. AFTAB
80137
REGISTERED
PROFESSIONAL ENGINEER

S. Nawab Aftab
1/5/98

Change Order No. 3

3 OF 5

A

FILENAME: gr\6731G-03\rwlab03.dgn PLOTTED: 05 JAN 98 15:13:04

LEVELS DISPLAYED

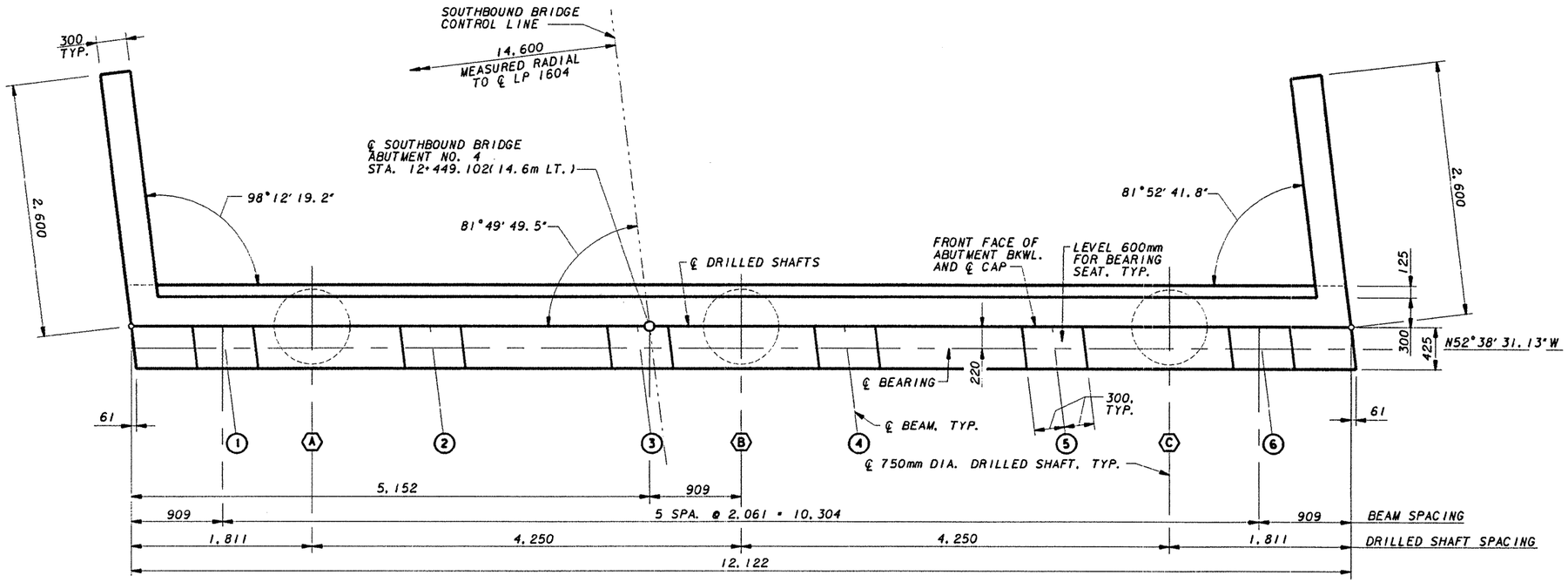

PLAN

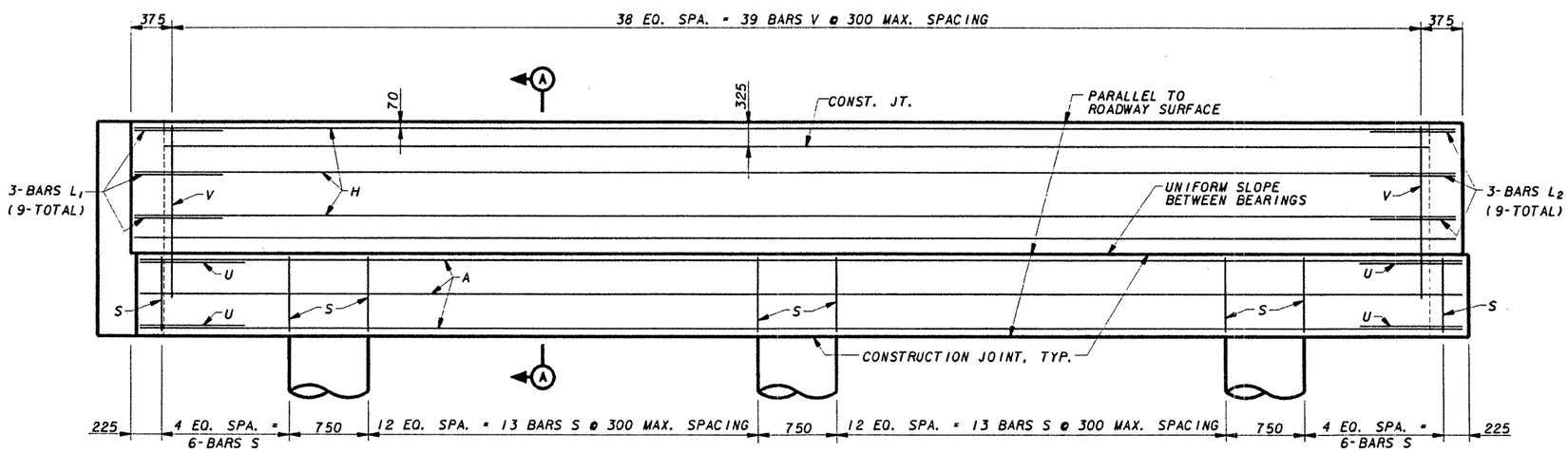

ELEVATION

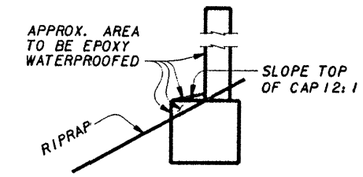

WATERPROOFING DETAIL

NOTE:

THE FACE OF BACKWALL AND THE TOP, FRONT, & ENDS OF THE CAP AS SHOWN, EXCEPT BEARING SEATS, SHALL BE WATERPROOFED AS PER ITEM, "EPOXY WATERPROOFING".

GENERAL NOTES:

DESIGNED ACCORDING TO AASHTO "STANDARD SPECIFICATIONS FOR HIGHWAY BRIDGES", 1996, FOR A MS18 LOADING.
HORIZONTAL DIMENSIONS ARE SHOWN AND MUST BE CORRECTED FOR GRADE AND CROSS SLOPE, WHERE APPROPRIATE.
ALL CAST-IN-PLACE CONCRETE TO BE CLASS C. DESIGN f'c = 25 MPa.
CHAMFER ALL EXPOSED CONCRETE EDGES 20mm, UNLESS OTHERWISE SHOWN.
REINFORCING STEEL SHALL BE ASTM A-615, GRADE 420, EXCEPT AS NOTED.
DRILLED SHAFTS ARE DESIGNED FOR END BEARING IN GRAY, UNWEATHERED LIMESTONE. DRILLED SHAFTS SHALL BE FOUNDED AT THE ELEVATIONS SHOWN OR LOWER, AS NECESSARY, TO PENETRATE A MINIMUM OF 1.5m INTO UNWEATHERED ROCK.
FOR LENGTH OF DRILLED SHAFTS AND LOADS, SEE FOUNDATION PLAN SHEET 151.
SEE SEJ-A (M) STANDARD SHEET FOR DETAILS TO BE PLACED WITH ABUTMENT.
FOR BEAM SKEW ANGLES, SEE FRAMING PLAN SHEET 162.
FOR BEARING SEAT ELEVATIONS, SEE ESTIMATED QUANTITY SUMMARY SHEET 150.
FOR ABUTMENT SECTIONS AND DETAILS, BILL OF REINFORCING STEEL, AND ESTIMATED SUMMARY, SEE SHEET 156.

(1) - DENOTES THE BEAM NUMBER

(A) - DENOTES THE DRILLED SHAFT NUMBER

NO.	DATE	REVISION	APPROV.

Texas Department of Transportation
LOOP 1604

SOUTHBOUND BRIDGE
AT HELOTES CREEK

ABUTMENT NO. 4 DETAILS

Kimley-Horn and Associates, Inc.

STATE OF TEXAS
S. N. AFTAB
80137
REGISTERED PROFESSIONAL ENGINEER

S. Naved Aftab
5/2/97

Designed SNA	DIST	FED REG	FEDERAL AID PROJECT #	HIGHWAY
Checked DKK	15	6	CD 2452-01-035	LP1604

Drawn JTK	COUNTY	CONTROL	SECT	JOB	SHEET
Checked SNA	BEXAR	2452	01	035	155

4 OF 5

FILENAME: p:\67316-03\rel0004.dgn PLOTTED: 01 MAY 97 18:09:27

LEVELS DISPLAYED

1	2	3	4	5	6	7	8	9	10	11	12	13	14	15	16	17	18	19	20	21	22	23	24	25	26	27	28	29	30	31	32
33	34	35	36	37	38	39	40	41	42	43	44	45	46	47	48	49	50	51	52	53	54	55	56	57	58	59	60	61	62	63	

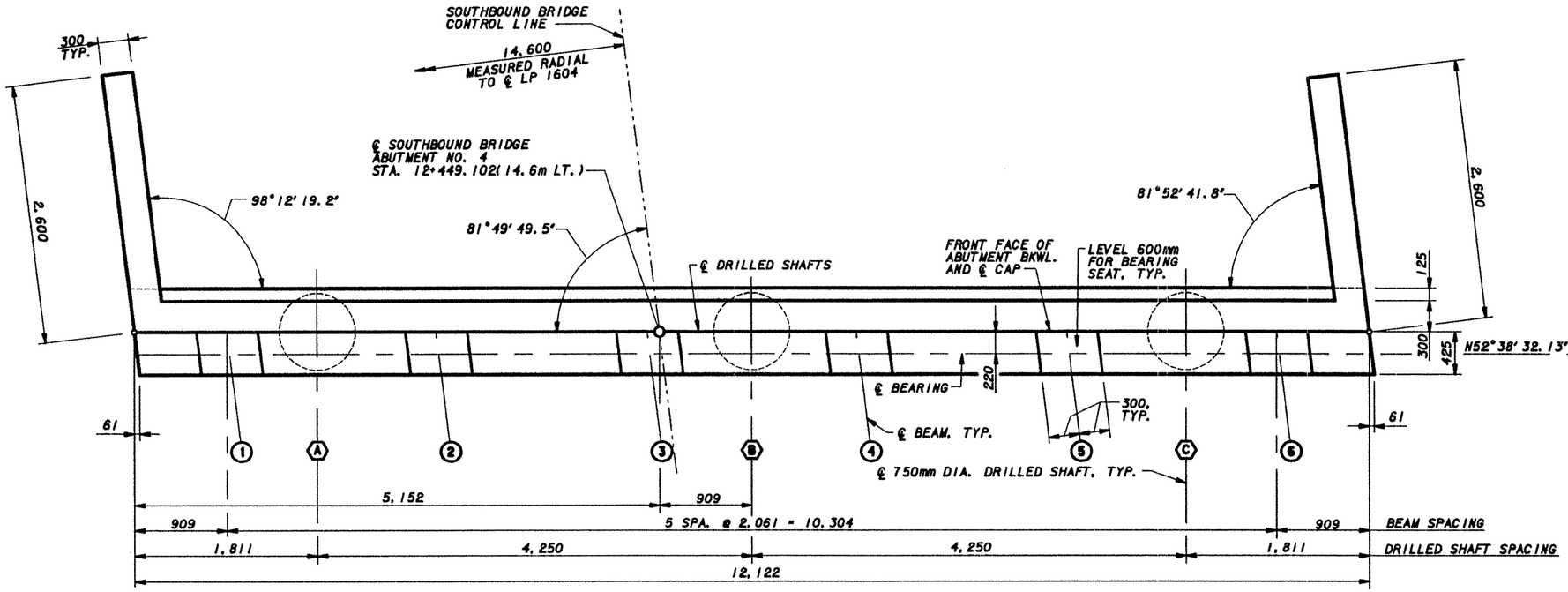

PLAN

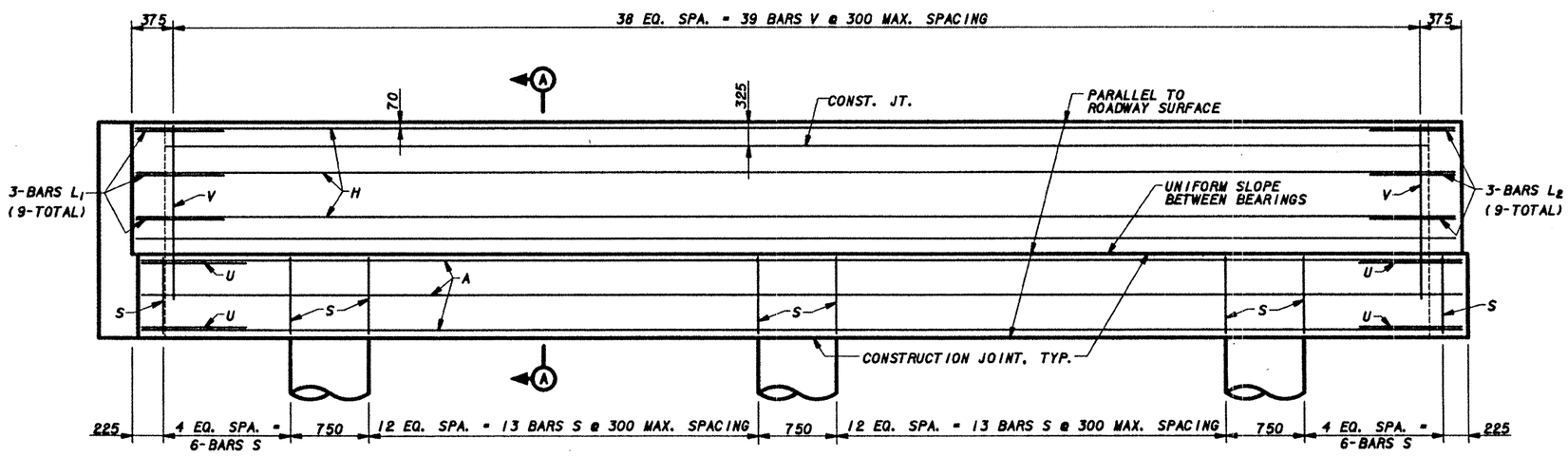

ELEVATION

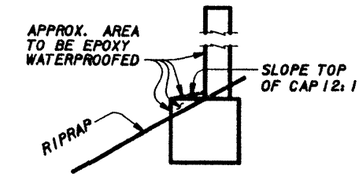

WATERPROOFING DETAIL

NOTE:

THE FACE OF BACKWALL AND THE TOP, FRONT, & ENDS OF THE CAP AS SHOWN, EXCEPT BEARING SEATS, SHALL BE WATERPROOFED AS PER ITEM, "EPOXY WATERPROOFING".

GENERAL NOTES:

DESIGNED ACCORDING TO AASHTO "STANDARD SPECIFICATIONS FOR HIGHWAY BRIDGES", 1996, FOR A MS18 LOADING.
HORIZONTAL DIMENSIONS ARE SHOWN AND MUST BE CORRECTED FOR GRADE AND CROSS SLOPE, WHERE APPROPRIATE.
ALL CAST-IN-PLACE CONCRETE TO BE CLASS C. DESIGN f'c = 25 MPa.
CHAMFER ALL EXPOSED CONCRETE EDGES 20mm, UNLESS OTHERWISE SHOWN.
REINFORCING STEEL SHALL BE ASTM A-615, GRADE 420, EXCEPT AS NOTED.
DRILLED SHAFTS ARE DESIGNED FOR END BEARING IN GRAY, UNWEATHERED LIMESTONE. DRILLED SHAFTS SHALL BE FOUNDED AT THE ELEVATIONS SHOWN OR LOWER, AS NECESSARY, TO PENETRATE A MINIMUM OF 1.5m INTO UNWEATHERED ROCK.
FOR LENGTH OF DRILLED SHAFTS AND LOADS, SEE FOUNDATION PLAN SHEET 151.
SEE SEJ-A (M) STANDARD SHEET FOR DETAILS TO BE PLACED WITH ABUTMENT.
FOR BEAM SKEW ANGLES, SEE FRAMING PLAN SHEET 162.
FOR BEARING SEAT ELEVATIONS, SEE ESTIMATED QUANTITY SUMMARY SHEET 150.
FOR ABUTMENT SECTIONS AND DETAILS, BILL OF REINFORCING STEEL, AND ESTIMATED SUMMARY, SEE SHEET 156.

(1) - DENOTES THE BEAM NUMBER
(A) - DENOTES THE DRILLED SHAFT NUMBER

NO.	DATE	REVISION	APPROV.
1	1/5/98	Revised Bearing of Abutment	SNA

Texas Department of Transportation
LOOP 1604

SOUTHBOUND BRIDGE AT HELOTES CREEK

ABUTMENT NO. 4 DETAILS

Kimley-Horn and Associates, Inc.

Designed SNA	DIST	FED RED	FEDERAL AID PROJECT				HIGHWAY
Checked DKK	15	6	CD 2452-01-035				LP1604
Drawn JTK	COUNTY		CONTROL	SECT	JOB		SHEET
Checked SNA	BEXAR		2452	01	035		155

STATE OF TEXAS S. N. AFTAB 80137 REGISTERED PROFESSIONAL ENGINEER

S. Naved Aftab 1/5/98

Change Order No. 3

4 OF 5

A

FILENAME: g:\67316-03\hela04.dgn PLOTTED: 05 JAN 98 15:13:33

LEVELS DISPLAYED

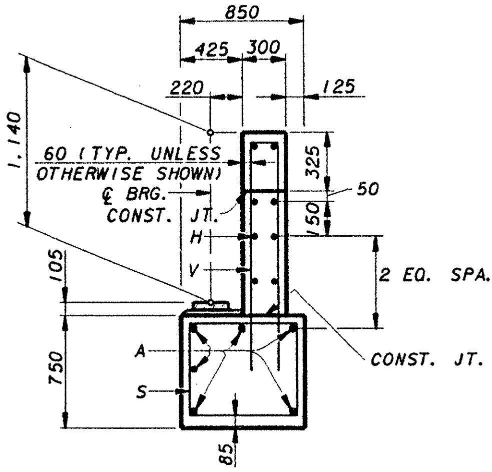

SECTION A-A

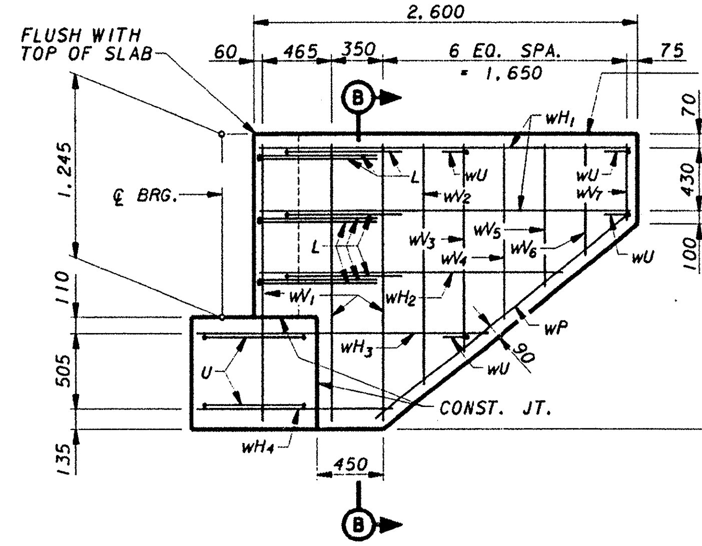

WINGWALL ELEVATION

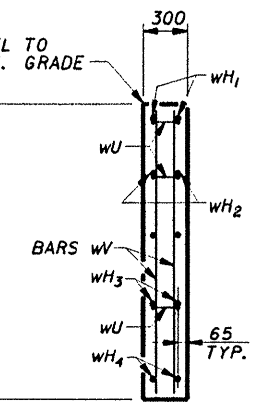

SECTION B-B

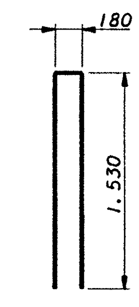

BARS V

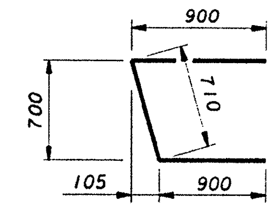

BARS U

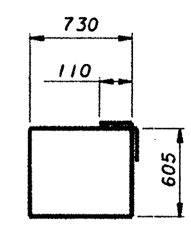

BARS S

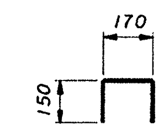

BARS wU

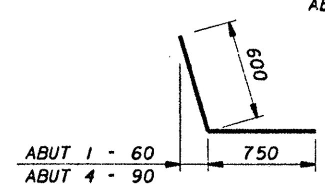

BARS L1

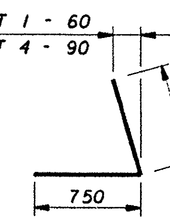

BARS L2

TABLE OF ESTIMATED QUANTITIES

BAR	NO.	SIZE	LENGTH	MASS
A	6	#11	11,760	558
H	8	#5	11,830	147
L_1	9	#6	1,350	28
L_2	9	#6	1,350	28
S	36	#4	2,890	104
U	4	#6	2,510	23
V	39	#5	3,240	197
wH_1	8	#6	2,500	45
wH_2	4	#6	2,100	19
wH_3	4	#6	2,020	19
wH_4	4	#6	1,225	11
wP	4	#6	1,860	17
wU	8	#4	470	4
wV_1	12	#5	1,895	36
wV_{2-7}	24	#5	1,120	42

REINFORCING STEEL	kg	1,278
CLASS "C" CONCRETE	m^3	14.5

NOTE:
ALL QUANTITIES SHOWN ARE FOR ONE ABUTMENT ONLY. FOUR ARE REQUIRED.

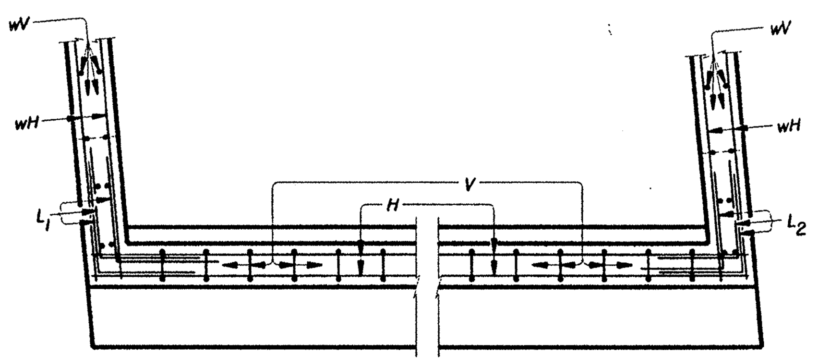

BACKWALL

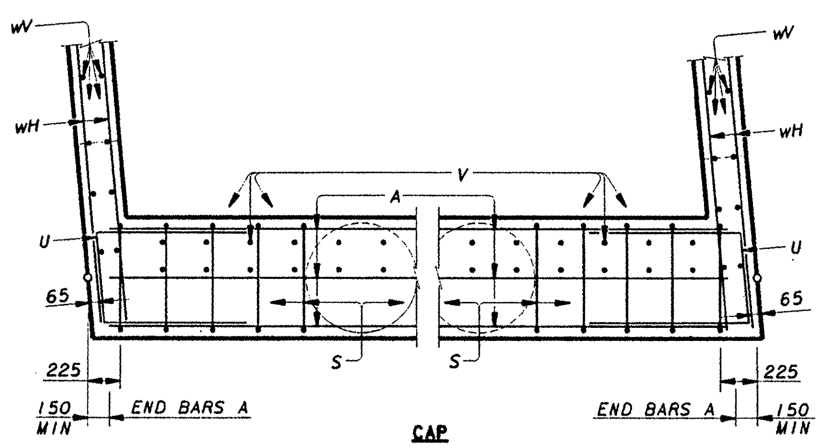

CAP

CORNER DETAILS

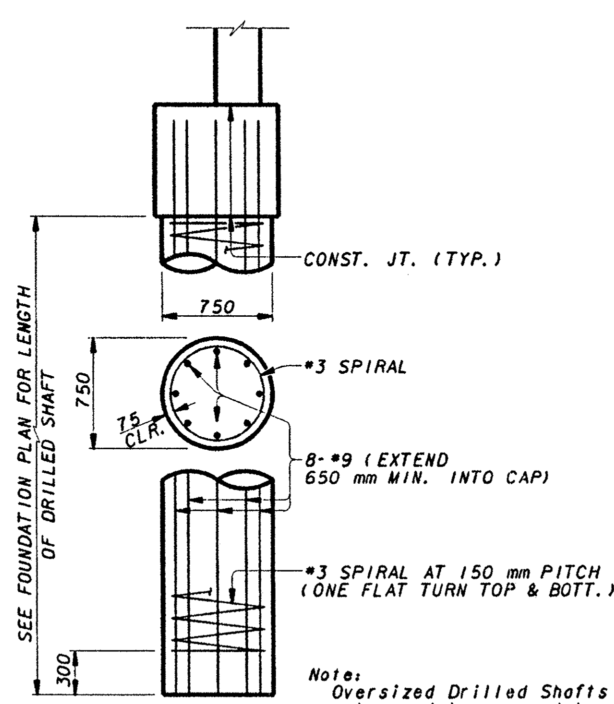

Note:
Oversized Drilled Shafts may be used to accomodate existing equipment.

DRILLED SHAFT DETAIL

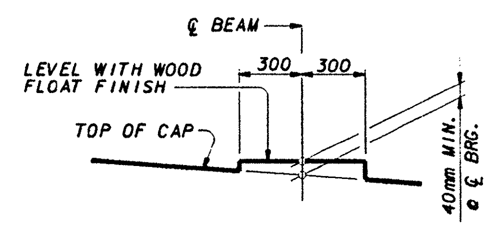

BEARING SEAT DETAIL

(BEARING SURFACE SHALL BE CLEAN AND FREE OF ALL LOOSE MATERIAL BEFORE PLACING BEARING PAD.)

STATE OF TEXAS — S. N. AFTAB — 80137 — REGISTERED PROFESSIONAL ENGINEER

S. Naved Aftab 5/2/97

NO.	DATE	REVISION	APPROV.

Texas Department of Transportation
LOOP 1604

NORTHBOUND AND SOUTHBOUND BRIDGE AT HELOTES CREEK

ABUTMENT DETAILS

Kimley-Horn and Associates, Inc.

Designed SNA	DIST	FED REG	FEDERAL AID PROJECT #				HIGHWAY
Checked DKK	15	6	CD 2452-01-035				LP1604
Drawn JTK	COUNTY		CONTROL	SECT	JOB		SHEET
Checked SNA	BEXAR		2452	01	035		156

5 OF 5

FILENAME: p:\67316-03\helab05.dgn PLOTTED: 01 MAY 97 18:10:09

LEVELS DISPLAYED

1	2	3	4	5	6	7	8	9	10	11	12	13	14	15	16
17	18	19	20	21	22	23	24	25	26	27	28	29	30	31	32
33	34	35	36	37	38	39	40	41	42	43	44	45	46	47	48
49	50	51	52	53	54	55	56	57	58	59	60	61	62	63	

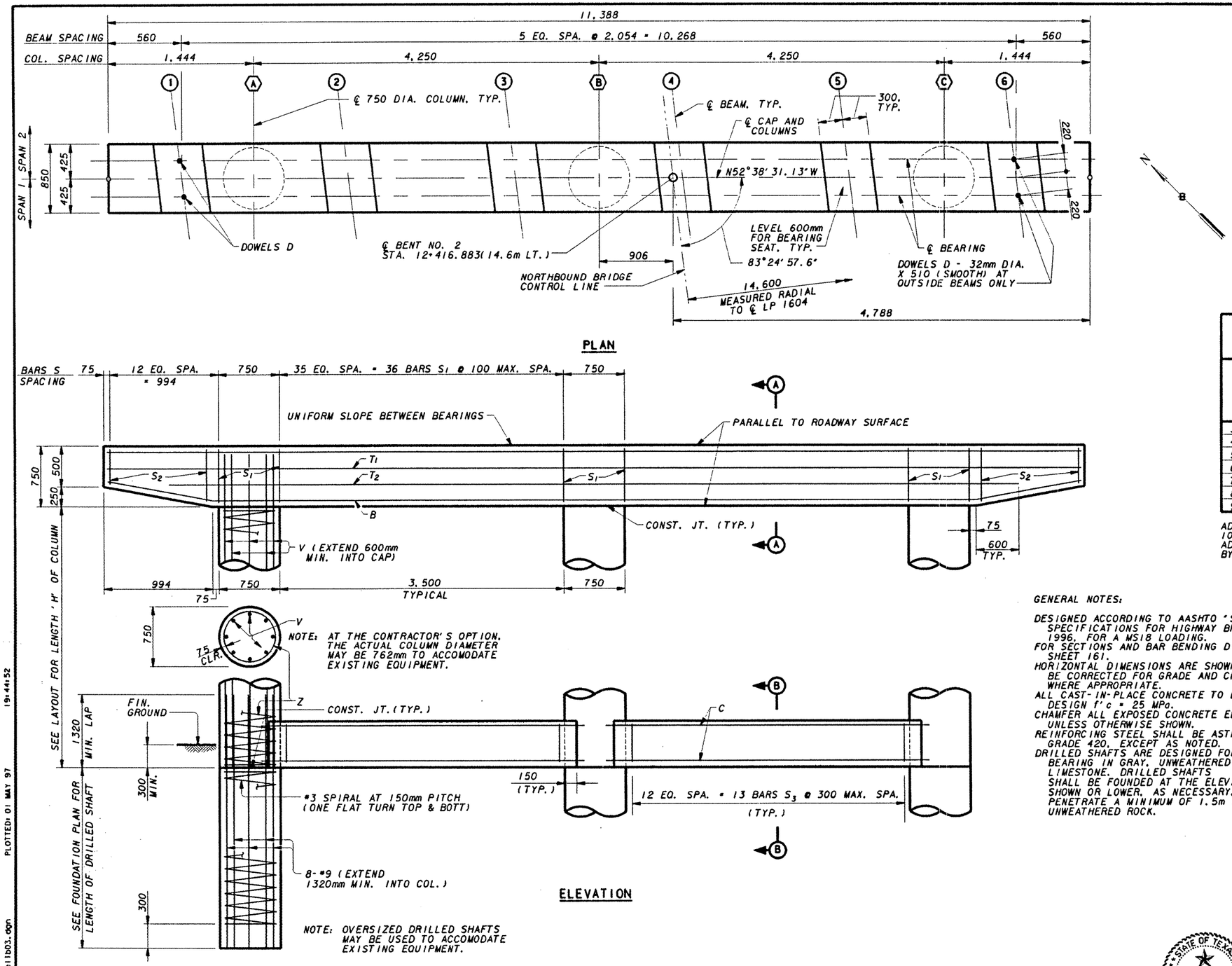

NOTE: ALL REINFORCING STEEL IN DRILLED SHAFT IS INCLUDED IN THE PRICE BID FOR DRILLED SHAFTS.

TABLE OF CONSTANT QUANTITIES

BAR	NO.	SIZE	LENGTH	MASS
A	5	#10	11,288	362
B	3	#10	11,348	219
C	16	#6	4,000	144
D ◆	4	32mm	510	14
S_1	74	#5	3,020	347
S_2	24	#5	2,790	104
S_3	26	#4	2,090	55
T_1	2	#5	11,288	36
T_2	2	#5	10,600	33
REINFORCING STEEL			kg	1,314
CLASS "C" CONCRETE			m^3	9.6

◆ - 32mm SMOOTH DOWEL

TABLE OF VARIABLE COLUMN QUANTITIES / ESTIMATED QUANTITIES

"H"	BARS Z 3 - #3 SPIRAL		BARS V 24 - #9		REINF STEEL	CLASS "C" CONC
	LENGTH	MASS	LENGTH	MASS	kg	m^3
3,000	41,600	70	3,600	455	525	4.0
4,000	54,210	91	4,600	582	673	5.3
5,000	66,820	112	5,600	708	820	6.6
6,000	79,430	133	6,600	834	967	8.0
7,000	92,040	155	7,600	961	1,116	9.3
8,000	104,650	176	8,600	1,087	1,263	10.6
9,000	117,260	197	9,600	1,214	1,411	11.9

ADJUST BARS Z LENGTH BY 1,261 mm AND BARS V LENGTH BY 100 mm FOR EACH 100 mm VARIATION IN "H" VALUE.
ADJUST REINFORCING STEEL TOTAL BY 9.52 kg AND CONCRETE BY 0.088 m^3 FOR EACH 100 mm VARIATION IN "H" VALUE.

GENERAL NOTES:

DESIGNED ACCORDING TO AASHTO "STANDARD SPECIFICATIONS FOR HIGHWAY BRIDGES", 1996, FOR A MS18 LOADING.
FOR SECTIONS AND BAR BENDING DIAGRAMS, SEE SHEET 161.
HORIZONTAL DIMENSIONS ARE SHOWN AND MUST BE CORRECTED FOR GRADE AND CROSS SLOPE, WHERE APPROPRIATE.
ALL CAST-IN-PLACE CONCRETE TO BE CLASS C. DESIGN f'c = 25 MPa.
CHAMFER ALL EXPOSED CONCRETE EDGES 20mm, UNLESS OTHERWISE SHOWN.
REINFORCING STEEL SHALL BE ASTM A-615, GRADE 420, EXCEPT AS NOTED.
DRILLED SHAFTS ARE DESIGNED FOR END BEARING IN GRAY, UNWEATHERED LIMESTONE. DRILLED SHAFTS SHALL BE FOUNDED AT THE ELEVATIONS SHOWN OR LOWER, AS NECESSARY, TO PENETRATE A MINIMUM OF 1.5m INTO UNWEATHERED ROCK.

FOR LENGTH OF DRILLED SHAFTS AND LOADS, SEE FOUNDATION PLAN SHEET 151.
FOR BEAM SKEW ANGLES, SEE FRAMING PLAN SHEET 162.
FOR BEARING SEAT ELEVATIONS, SEE ESTIMATED QUANTITY SUMMARY SHEET 150.
FOR TIE BEAM DETAILS, SEE SHEET 161.

(1) - DENOTES THE BEAM NUMBER
(A) - DENOTES THE DRILLED SHAFT NUMBER

STATE OF TEXAS
S. N. AFTAB
80137
REGISTERED PROFESSIONAL ENGINEER
S. Nawaz Aftab
5/2/97

NO.	DATE	REVISION	APPROV.

Texas Department of Transportation
LOOP 1604

NORTHBOUND BRIDGE AT HELOTES CREEK
BENT NO. 2 DETAILS

Kimley-Horn and Associates, Inc.

Designed SNA	DIST	FED REG	FEDERAL AID PROJECT #				HIGHWAY
Checked DKK	15	6	CD 2452-01-035				LP1604
Drawn JTK	COUNTY		CONTROL	SECT	JOB		SHEET
Checked SNA	BEXAR		2452	01	035		157

1 OF 5

FILENAME: pr\67316-03\hel1b03.dgn PLOTTED: 01 MAY 97 19:44:52

LEVELS DISPLAYED
1 2 3 4 5 6 7 8 9 10 11 12 13 14 15 16
17 18 19 20 21 22 23 24 25 26 27 28 29 30 31 32
33 34 35 36 37 38 39 40 41 42 43 44 45 46 47 48
49 50 51 52 53 54 55 56 57 58 59 60 61 62 63

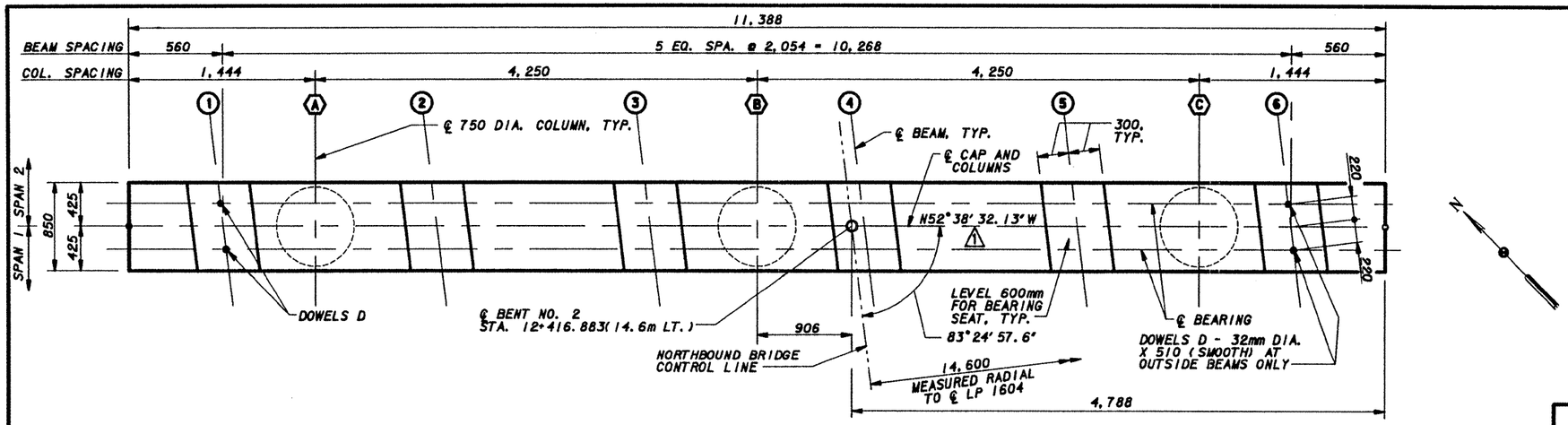

PLAN

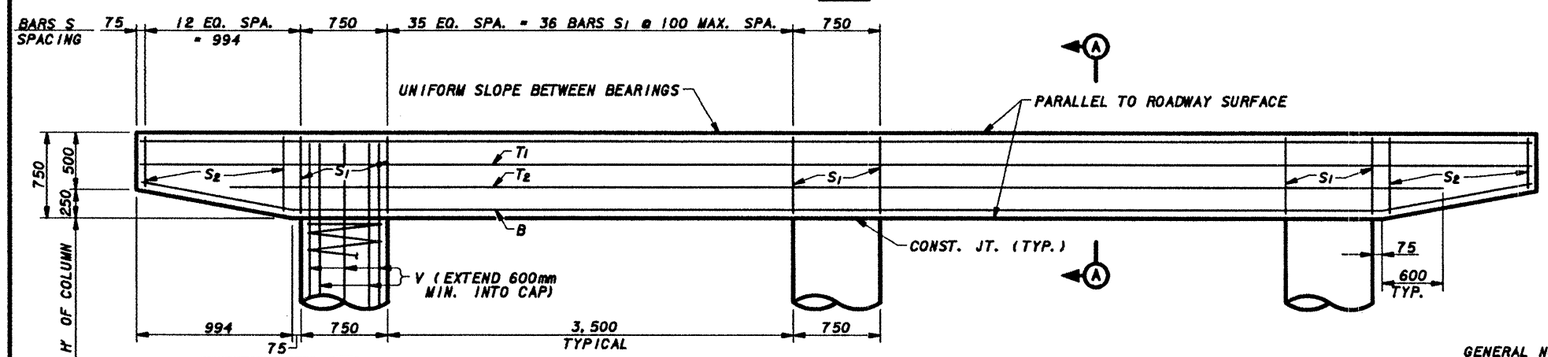

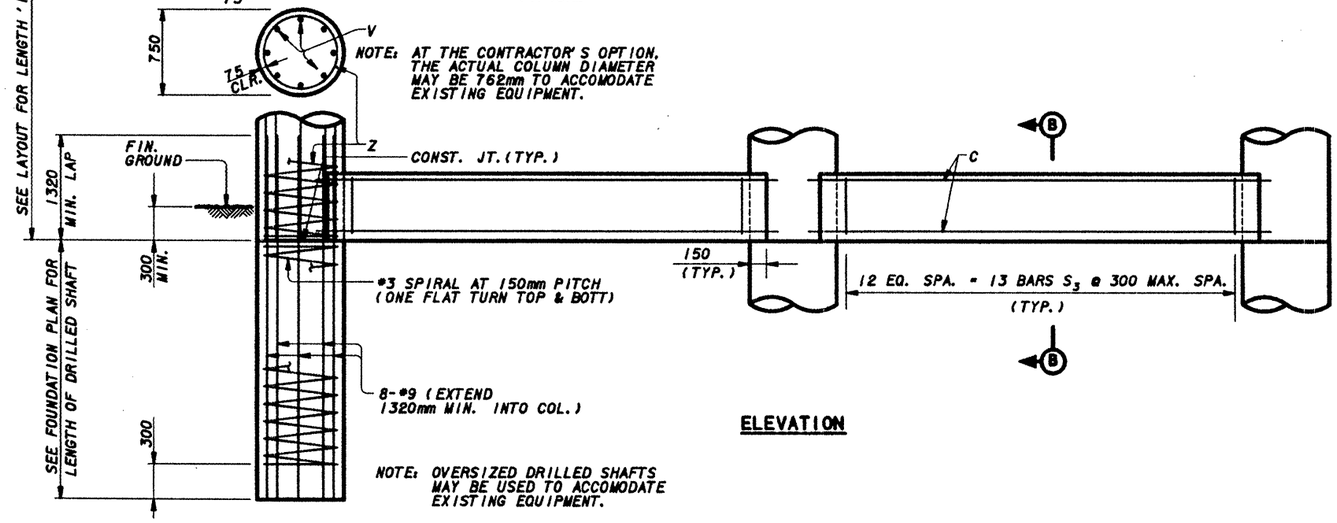

ELEVATION

NOTE: ALL REINFORCING STEEL IN DRILLED SHAFT IS INCLUDED IN THE PRICE BID FOR DRILLED SHAFTS.

TABLE OF CONSTANT QUANTITIES

BAR	NO.	SIZE	LENGTH	MASS
A	5	#10	11,288	362
B	3	#10	11,348	219
C	16	#6	4,000	144
◆ D	4	32mm	510	14
S_1	74	#5	3,020	347
S_2	24	#5	2,790	104
S_3	26	#4	2,090	55
T_1	2	#5	11,288	36
T_2	2	#5	10,600	33
REINFORCING STEEL			kg	1,314
CLASS 'C' CONCRETE			m^3	9.6

◆ - 32mm SMOOTH DOWEL

TABLE OF VARIABLE COLUMN QUANTITIES / ESTIMATED QUANTITIES

"H"	BARS Z 3 - #3 SPIRAL		BARS V 24 - #9		ESTIMATED QUANTITIES REINF STEEL	CLASS "C" CONC
	LENGTH	MASS	LENGTH	MASS	kg	m^3
3,000	41,600	70	3,600	455	525	4.0
4,000	54,210	91	4,600	582	673	5.3
5,000	66,820	112	5,600	708	820	6.6
6,000	79,430	133	6,600	834	967	8.0
7,000	92,040	155	7,600	961	1,116	9.3
8,000	104,650	176	8,600	1,087	1,263	10.6
9,000	117,260	197	9,600	1,214	1,411	11.9

ADJUST BARS Z LENGTH BY 1,261 mm AND BARS V LENGTH BY 100 mm FOR EACH 100 mm VARIATION IN "H" VALUE.
ADJUST REINFORCING STEEL TOTAL BY 9.52 kg AND CONCRETE BY 0.088 m^3 FOR EACH 100 mm VARIATION IN "H" VALUE.

GENERAL NOTES:

DESIGNED ACCORDING TO AASHTO "STANDARD SPECIFICATIONS FOR HIGHWAY BRIDGES", 1996, FOR A MS18 LOADING.
FOR SECTIONS AND BAR BENDING DIAGRAMS, SEE SHEET 161.
HORIZONTAL DIMENSIONS ARE SHOWN AND MUST BE CORRECTED FOR GRADE AND CROSS SLOPE, WHERE APPROPRIATE.
ALL CAST-IN-PLACE CONCRETE TO BE CLASS C. DESIGN f'c = 25 MPa.
CHAMFER ALL EXPOSED CONCRETE EDGES 20mm, UNLESS OTHERWISE SHOWN.
REINFORCING STEEL SHALL BE ASTM A-615, GRADE 420, EXCEPT AS NOTED.
DRILLED SHAFTS ARE DESIGNED FOR END BEARING IN GRAY, UNWEATHERED LIMESTONE. DRILLED SHAFTS SHALL BE FOUNDED AT THE ELEVATIONS SHOWN OR LOWER, AS NECESSARY, TO PENETRATE A MINIMUM OF 1.5m INTO UNWEATHERED ROCK.

FOR LENGTH OF DRILLED SHAFTS AND LOADS, SEE FOUNDATION PLAN SHEET 151.
FOR BEAM SKEW ANGLES, SEE FRAMING PLAN SHEET 162.
FOR BEARING SEAT ELEVATIONS, SEE ESTIMATED QUANTITY SUMMARY SHEET 150.
FOR TIE BEAM DETAILS, SEE SHEET 161.

(1) - DENOTES THE BEAM NUMBER
(A) - DENOTES THE DRILLED SHAFT NUMBER

NO.	DATE	REVISION	APPROV.
1	1/5/98	Revised Bearing of Bent	SNA

STATE OF TEXAS S. N. AFTAB 80137 REGISTERED PROFESSIONAL ENGINEER

S. Nawed Aftab 1/5/98

Change Order No. 3

Texas Department of Transportation
LOOP 1604

NORTHBOUND BRIDGE AT HELOTES CREEK
BENT NO. 2 DETAILS

Kimley-Horn and Associates, Inc.

Designed SNA	DIST	FED RDS	FEDERAL AID PROJECT #					HIGHWAY
Checked DKK	15	6	CD 2452-01-035					LP1604
Drawn JTK	COUNTY			CONTROL	SECT	JOB		SHEET
Checked SNA	BEXAR			2452	01	035		157

1 OF 5

A

FILENAME: g:\67316-03\bell1b03.dgn PLOTTED: 05 JAN 98 15:17:15

LEVELS DISPLAYED
1 2 3 4 5 6 7 8 9 10 11 12 13 14 15 16
17 18 19 20 21 22 23 24 25 26 27 28 29 30 31 32
33 34 35 36 37 38 39 40 41 42 43 44 45 46 47 48
49 50 51 52 53 54 55 56 57 58 59 60 61 62 63

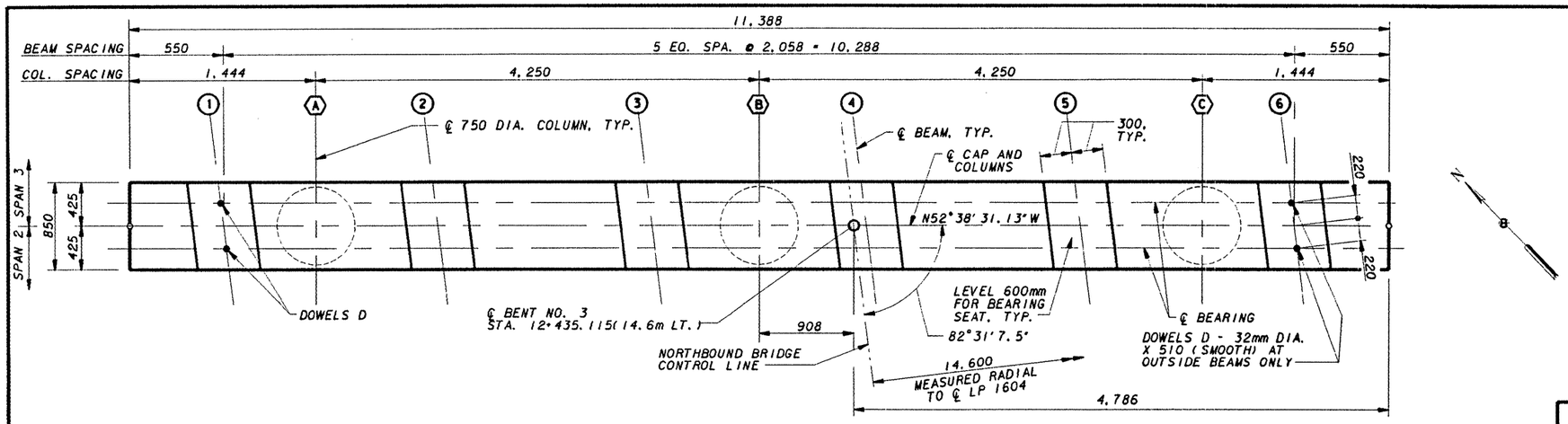

PLAN

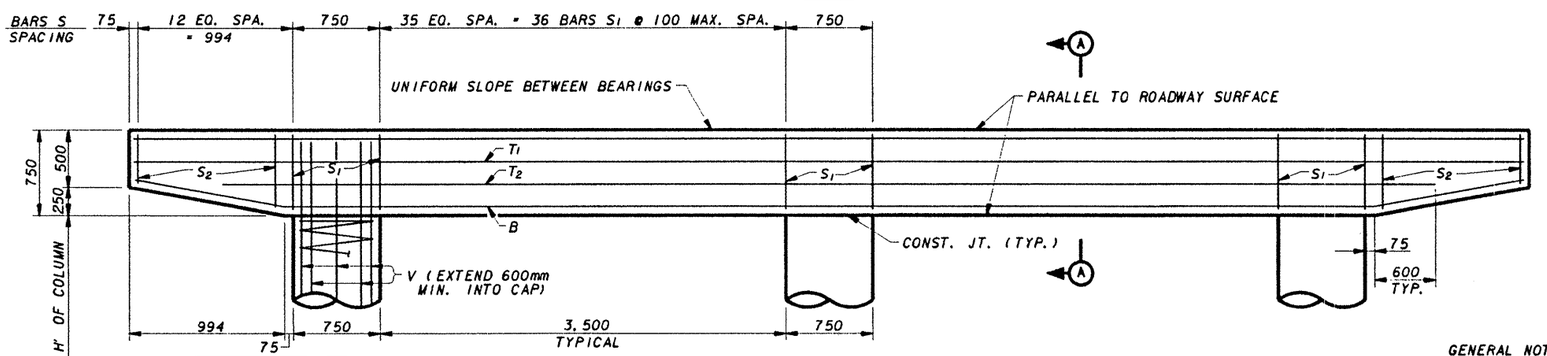

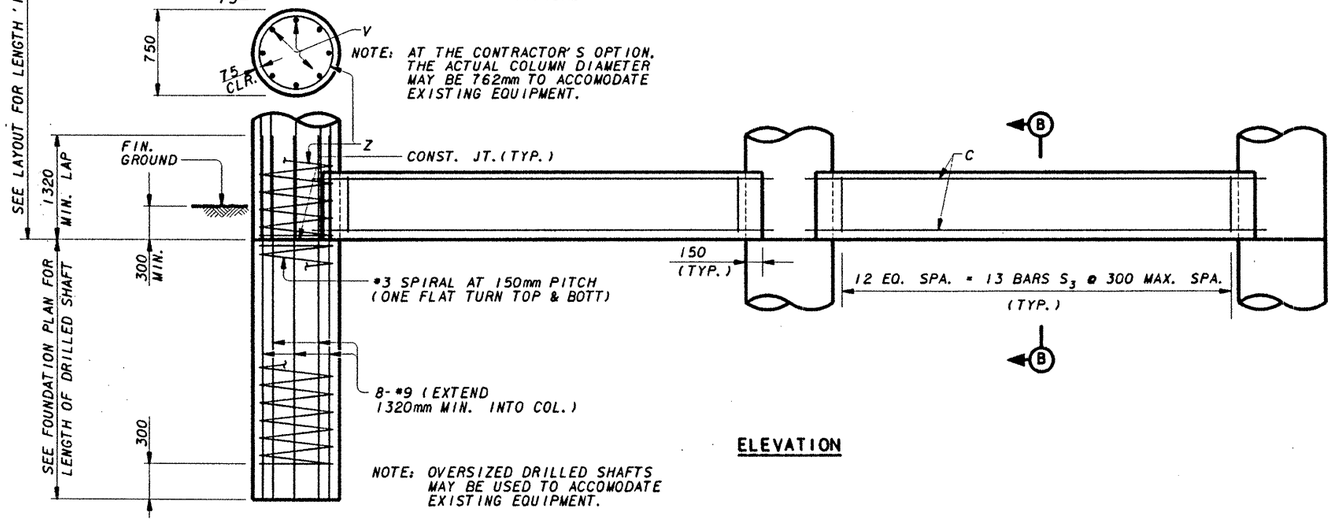

ELEVATION

NOTE: ALL REINFORCING STEEL IN DRILLED SHAFT IS INCLUDED IN THE PRICE BID FOR DRILLED SHAFTS.

TABLE OF CONSTANT QUANTITIES

BAR	NO.	SIZE	LENGTH	MASS
A	5	#10	11,288	362
B	3	#10	11,348	219
C	16	#6	4,000	144
◆ D	4	32mm	510	14
S_1	74	#5	3,020	347
S_2	24	#5	2,790	104
S_3	26	#4	2,090	55
T_1	2	#5	11,288	36
T_2	2	#5	10,600	33
REINFORCING STEEL			kg	1,314
CLASS "C" CONCRETE			m^3	9.6

◆ - 32mm SMOOTH DOWEL

TABLE OF VARIABLE COLUMN QUANTITIES / ESTIMATED QUANTITIES

"H"	BARS Z 3 - #3 SPIRAL		BARS V 24 - #9		REINF STEEL	CLASS "C" CONC
	LENGTH	MASS	LENGTH	MASS	kg	m^3
3,000	41,600	70	3,600	455	525	4.0
4,000	54,210	91	4,600	582	673	5.3
5,000	66,820	112	5,600	708	820	6.6
6,000	79,430	133	6,600	834	967	8.0
7,000	92,040	155	7,600	961	1,116	9.3
8,000	104,650	176	8,600	1,087	1,263	10.6
9,000	117,260	197	9,600	1,214	1,411	11.9

ADJUST BARS Z LENGTH BY 1,261 mm AND BARS V LENGTH BY 100 mm FOR EACH 100 mm VARIATION IN "H" VALUE.
ADJUST REINFORCING STEEL TOTAL BY 9.52 kg AND CONCRETE BY 0.088 m3 FOR EACH 100 mm VARIATION IN "H" VALUE.

GENERAL NOTES:

DESIGNED ACCORDING TO AASHTO "STANDARD SPECIFICATIONS FOR HIGHWAY BRIDGES", 1996, FOR A MS18 LOADING.
FOR SECTIONS AND BAR BENDING DIAGRAMS, SEE SHEET 161.
HORIZONTAL DIMENSIONS ARE SHOWN AND MUST BE CORRECTED FOR GRADE AND CROSS SLOPE, WHERE APPROPRIATE.
ALL CAST-IN-PLACE CONCRETE TO BE CLASS C. DESIGN f'c = 25 MPa.
CHAMFER ALL EXPOSED CONCRETE EDGES 20mm, UNLESS OTHERWISE SHOWN.
REINFORCING STEEL SHALL BE ASTM A-615, GRADE 420, EXCEPT AS NOTED.
DRILLED SHAFTS ARE DESIGNED FOR END BEARING IN GRAY, UNWEATHERED LIMESTONE. DRILLED SHAFTS SHALL BE FOUNDED AT THE ELEVATIONS SHOWN OR LOWER, AS NECESSARY, TO PENETRATE A MINIMUM OF 1.5m INTO UNWEATHERED ROCK.

FOR LENGTH OF DRILLED SHAFTS AND LOADS, SEE FOUNDATION PLAN SHEET 151.
FOR BEAM SKEW ANGLES, SEE FRAMING PLAN SHEET 162.
FOR BEARING SEAT ELEVATIONS, SEE ESTIMATED QUANTITY SUMMARY SHEET 150.
FOR TIE BEAM DETAILS, SEE SHEET 161.

(1) - DENOTES THE BEAM NUMBER
(A) - DENOTES THE DRILLED SHAFT NUMBER

STATE OF TEXAS
S. N. AFTAB
80137
REGISTERED PROFESSIONAL ENGINEER

S. Naved Aftab

NO.	DATE	REVISION	APPROV.

Texas Department of Transportation
LOOP 1604

NORTHBOUND BRIDGE AT HELOTES CREEK

BENT NO. 3 DETAILS

Kimley-Horn and Associates, Inc.

Designed SNA	DIST	FED REG	FEDERAL AID PROJECT #					HIGHWAY
Checked DKK	15	6	CD 2452-01-035					LP1604
Drawn JTK	COUNTY			CONTROL	SECT	JOB		SHEET
Checked SNA	BEXAR			2452	01	035		158

FILENAME: pr\67316-03\hel1604.dgn PLOTTED: 01 MAY 97 19:46:57

LEVELS DISPLAYED
1 2 3 4 5 6 7 8 9 10 11 12 13 14 15 16
17 18 19 20 21 22 23 24 25 26 27 28 29 30 31 32
33 34 35 36 37 38 39 40 41 42 43 44 45 46 47 48
49 50 51 52 53 54 55 56 57 58 59 60 61 62 63

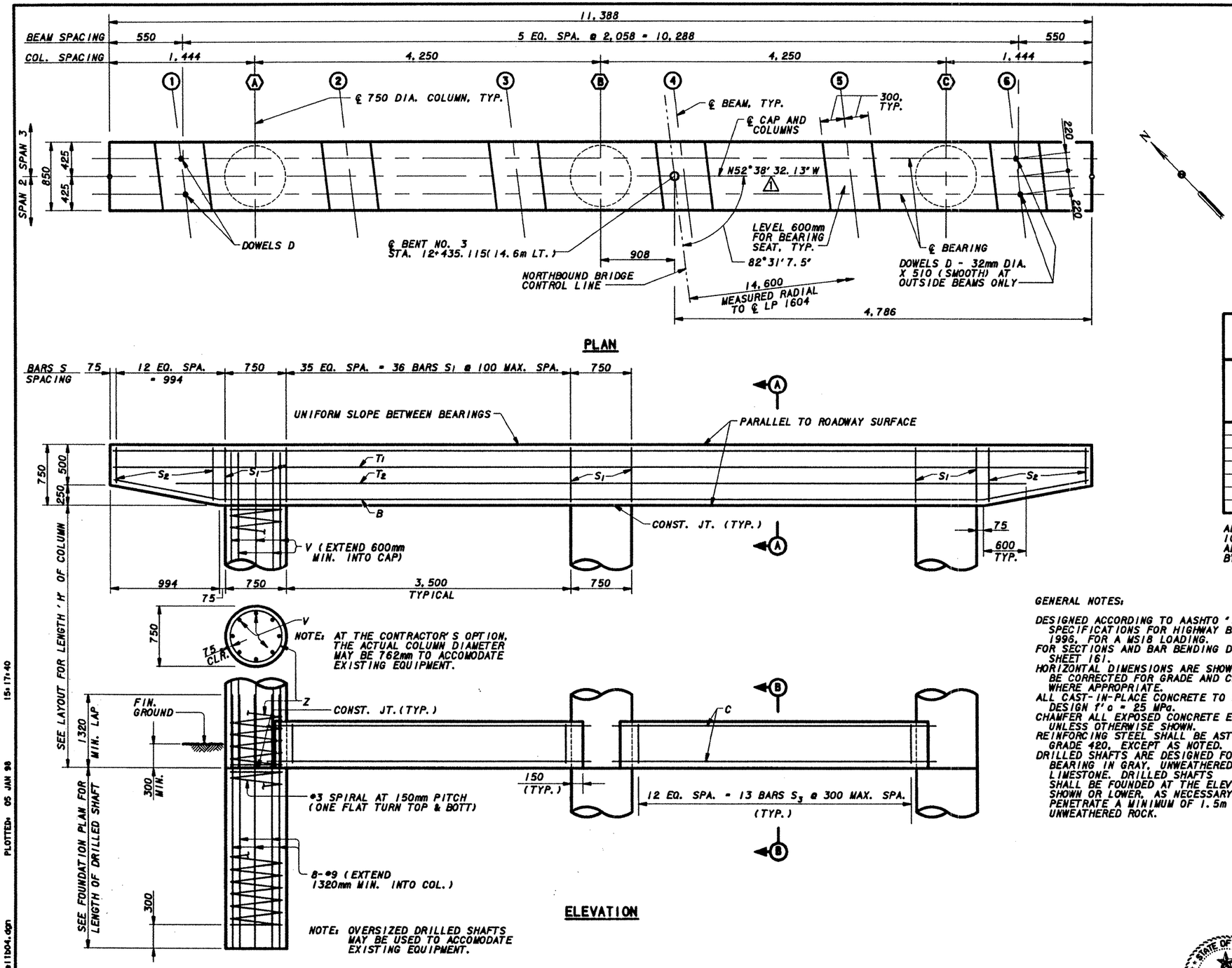

NOTE: ALL REINFORCING STEEL IN DRILLED SHAFT IS INCLUDED IN THE PRICE BID FOR DRILLED SHAFTS.

TABLE OF CONSTANT QUANTITIES

BAR	NO.	SIZE	LENGTH	MASS
A	5	#10	11,288	362
B	3	#10	11,348	219
C	16	#6	4,000	144
D	4	32mm	510	14
S_1	74	#5	3,020	347
S_2	24	#5	2,790	104
S_3	26	#4	2,090	55
T_1	2	#5	11,288	36
T_2	2	#5	10,600	33
REINFORCING STEEL			kg	1,314
CLASS 'C' CONCRETE			m^3	9.6

◆ - 32mm SMOOTH DOWEL

TABLE OF VARIABLE COLUMN QUANTITIES / ESTIMATED QUANTITIES

"H"	BARS Z 3 - #3 SPIRAL		BARS V 24 - #9		REINF STEEL	CLASS "C" CONC
	LENGTH	MASS	LENGTH	MASS	kg	m^3
3,000	41,600	70	3,600	455	525	4.0
4,000	54,210	91	4,600	582	673	5.3
5,000	66,820	112	5,600	708	820	6.6
6,000	79,430	133	6,600	834	967	8.0
7,000	92,040	155	7,600	961	1,116	9.3
8,000	104,650	176	8,600	1,087	1,263	10.6
9,000	117,260	197	9,600	1,214	1,411	11.9

ADJUST BARS Z LENGTH BY 1,261 mm AND BARS V LENGTH BY 100 mm FOR EACH 100 mm VARIATION IN "H" VALUE.
ADJUST REINFORCING STEEL TOTAL BY 9.52 kg AND CONCRETE BY 0.088 m3 FOR EACH 100 mm VARIATION IN "H" VALUE.

GENERAL NOTES:

DESIGNED ACCORDING TO AASHTO 'STANDARD SPECIFICATIONS FOR HIGHWAY BRIDGES', 1996, FOR A MS18 LOADING.
FOR SECTIONS AND BAR BENDING DIAGRAMS, SEE SHEET 161.
HORIZONTAL DIMENSIONS ARE SHOWN AND MUST BE CORRECTED FOR GRADE AND CROSS SLOPE, WHERE APPROPRIATE.
ALL CAST-IN-PLACE CONCRETE TO BE CLASS C. DESIGN f'c = 25 MPa.
CHAMFER ALL EXPOSED CONCRETE EDGES 20mm, UNLESS OTHERWISE SHOWN.
REINFORCING STEEL SHALL BE ASTM A-615, GRADE 420, EXCEPT AS NOTED.
DRILLED SHAFTS ARE DESIGNED FOR END BEARING IN GRAY, UNWEATHERED LIMESTONE. DRILLED SHAFTS SHALL BE FOUNDED AT THE ELEVATIONS SHOWN OR LOWER, AS NECESSARY, TO PENETRATE A MINIMUM OF 1.5m INTO UNWEATHERED ROCK.

FOR LENGTH OF DRILLED SHAFTS AND LOADS, SEE FOUNDATION PLAN SHEET 151.
FOR BEAM SKEW ANGLES, SEE FRAMING PLAN SHEET 162.
FOR BEARING SEAT ELEVATIONS, SEE ESTIMATED QUANTITY SUMMARY SHEET 150.
FOR TIE BEAM DETAILS, SEE SHEET 161.

(1) - DENOTES THE BEAM NUMBER
(A) - DENOTES THE DRILLED SHAFT NUMBER

NO.	DATE	REVISION	APPROV.
1	1/5/98	Revised Bearing of Bent	SNA

Texas Department of Transportation
LOOP 1604

NORTHBOUND BRIDGE AT HELOTES CREEK
BENT NO. 3 DETAILS

Kimley-Horn and Associates, Inc.

STATE OF TEXAS S. N. AFTAB 80137 REGISTERED PROFESSIONAL ENGINEER

S. Nawaz Aftab

Change Order No. 3

Designed SNA	DIST	FED RDS	FEDERAL AID PROJECT #					HIGHWAY
Checked DKK	15	6	CD 2452-01-035					LP1604
Drawn JTK	COUNTY			CONTROL	SECT	JOB		SHEET
Checked SNA	BEXAR			2452	01	035		158

2 OF 5

A

FILENAME: pw:\67316-03\bell1b04.dgn PLOTTED: 05 JAN 98 15:17:40

LEVELS DISPLAYED

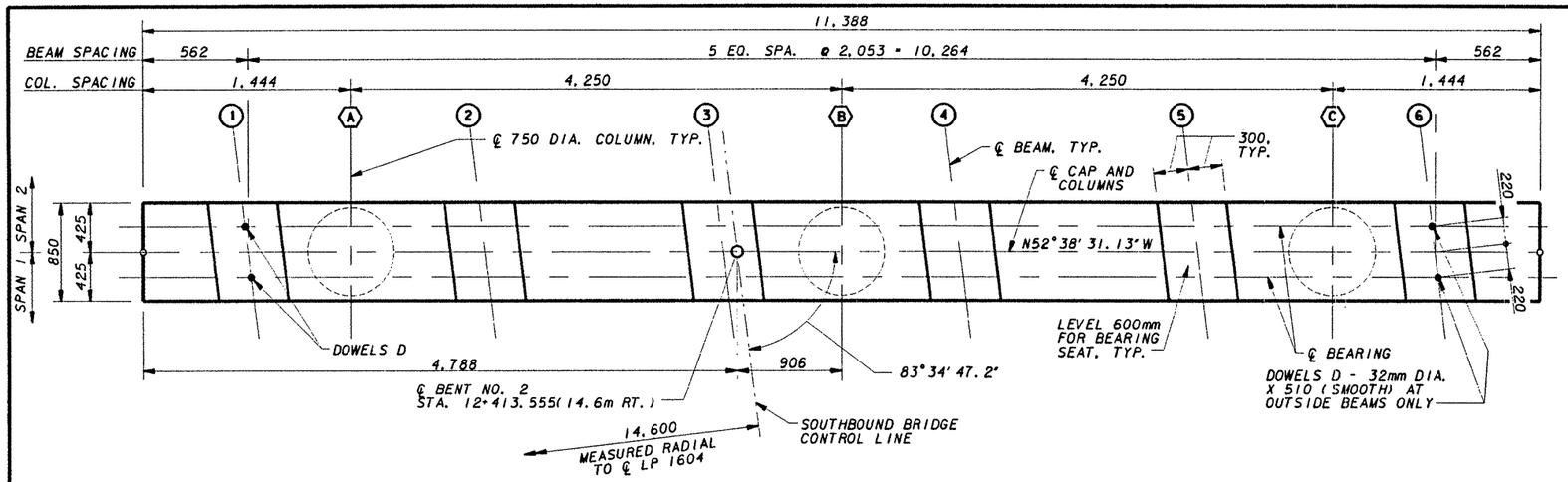

PLAN

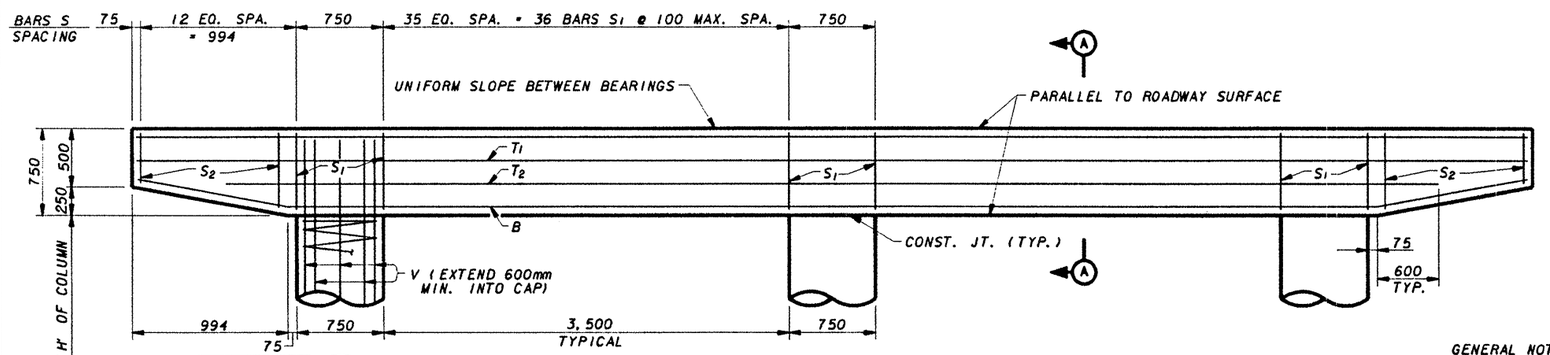

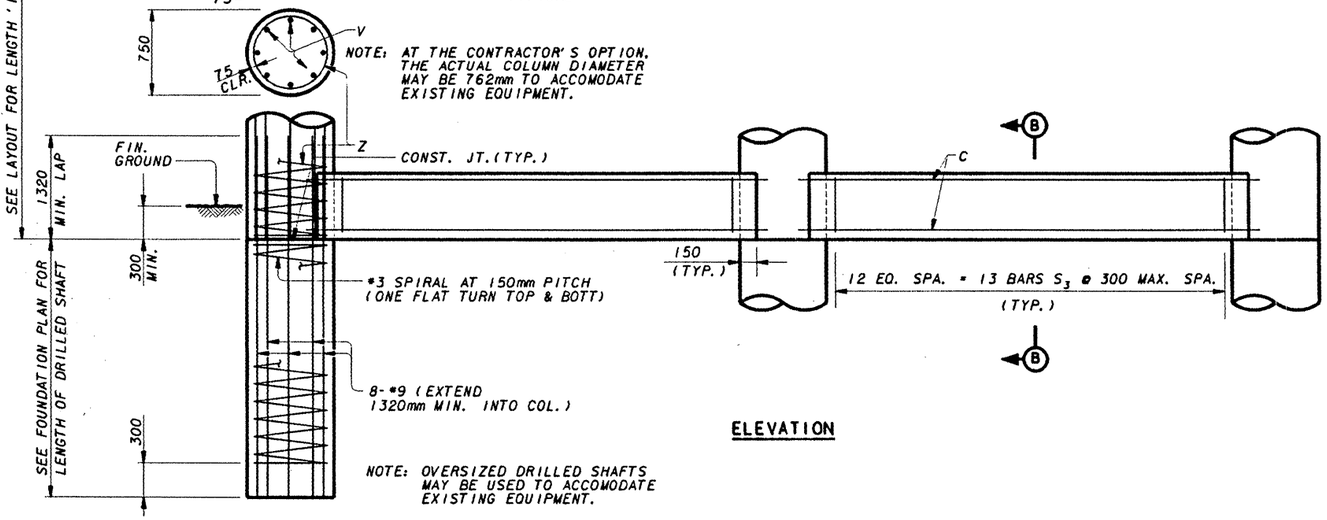

ELEVATION

NOTE: ALL REINFORCING STEEL IN DRILLED SHAFT IS INCLUDED IN THE PRICE BID FOR DRILLED SHAFTS.

TABLE OF CONSTANT QUANTITIES

BAR	NO.	SIZE	LENGTH	MASS
A	5	#10	11,288	362
B	3	#10	11,348	219
C	16	#6	4,000	144
◆ D	4	32mm	510	14
S_1	74	#5	3,020	347
S_2	24	#5	2,790	104
S_3	26	#4	2,090	55
T_1	2	#5	11,288	36
T_2	2	#5	10,600	33
REINFORCING STEEL			kg	1,314
CLASS "C" CONCRETE			m^3	9.6

◆ - 32mm SMOOTH DOWEL

TABLE OF VARIABLE COLUMN QUANTITIES / ESTIMATED QUANTITIES

"H"	BARS Z 3 - #3 SPIRAL		BARS V 24 - #9		REINF STEEL	CLASS "C" CONC
	LENGTH	MASS	LENGTH	MASS	kg	m^3
3,000	41,600	70	3,600	455	525	4.0
4,000	54,210	91	4,600	582	673	5.3
5,000	66,820	112	5,600	708	820	6.6
6,000	79,430	133	6,600	834	967	8.0
7,000	92,040	155	7,600	961	1,116	9.3
8,000	104,650	176	8,600	1,087	1,263	10.6
9,000	117,260	197	9,600	1,214	1,411	11.9

ADJUST BARS Z LENGTH BY 1,261 mm AND BARS V LENGTH BY 100 mm FOR EACH 100 mm VARIATION IN "H" VALUE.
ADJUST REINFORCING STEEL TOTAL BY 9.52 kg AND CONCRETE BY 0.088 m^3 FOR EACH 100 mm VARIATION IN "H" VALUE.

GENERAL NOTES:

DESIGNED ACCORDING TO AASHTO "STANDARD SPECIFICATIONS FOR HIGHWAY BRIDGES", 1996, FOR A MS18 LOADING.
FOR SECTIONS AND BAR BENDING DIAGRAMS, SEE SHEET 161.
HORIZONTAL DIMENSIONS ARE SHOWN AND MUST BE CORRECTED FOR GRADE AND CROSS SLOPE, WHERE APPROPRIATE.
ALL CAST-IN-PLACE CONCRETE TO BE CLASS C. DESIGN f'c = 25 MPa.
CHAMFER ALL EXPOSED CONCRETE EDGES 20mm, UNLESS OTHERWISE SHOWN.
REINFORCING STEEL SHALL BE ASTM A-615, GRADE 420, EXCEPT AS NOTED.
DRILLED SHAFTS ARE DESIGNED FOR END BEARING IN GRAY, UNWEATHERED LIMESTONE. DRILLED SHAFTS SHALL BE FOUNDED AT THE ELEVATIONS SHOWN OR LOWER, AS NECESSARY, TO PENETRATE A MINIMUM OF 1.5m INTO UNWEATHERED ROCK.

FOR LENGTH OF DRILLED SHAFTS AND LOADS, SEE FOUNDATION PLAN SHEET 151.
FOR BEAM SKEW ANGLES, SEE FRAMING PLAN SHEET 162.
FOR BEARING SEAT ELEVATIONS, SEE ESTIMATED QUANTITY SUMMARY SHEET 150.
FOR TIE BEAM DETAILS, SEE SHEET 161.

(1) - DENOTES THE BEAM NUMBER
(A) - DENOTES THE DRILLED SHAFT NUMBER

STATE OF TEXAS
S. N. AFTAB
80137
REGISTERED PROFESSIONAL ENGINEER
S. Naved Aftab
5/2/97

NO.	DATE	REVISION	APPROV.

Texas Department of Transportation
LOOP 1604

SOUTHBOUND BRIDGE AT HELOTES CREEK
BENT NO. 2 DETAILS

Kimley-Horn and Associates, Inc.

Designed SNA	DIST	FED REG	FEDERAL AID PROJECT #					HIGHWAY
Checked DKK	15	6	CD 2452-01-035					LP1604
Drawn JTK	COUNTY			CONTROL	SECT	JOB		SHEET
Checked SNA	BEXAR			2452	01	035		159

FILENAME: pw:\67316-03\hel1b01.dgn PLOTTED: 01 MAY 97 19:39:25

LEVELS DISPLAYED
1 2 3 4 5 6 7 8 9 10 11 12 13 14 15 16
17 18 19 20 21 22 23 24 25 26 27 28 29 30 31 32
33 34 35 36 37 38 39 40 41 42 43 44 45 46 47 48
49 50 51 52 53 54 55 56 57 58 59 60 61 62 63

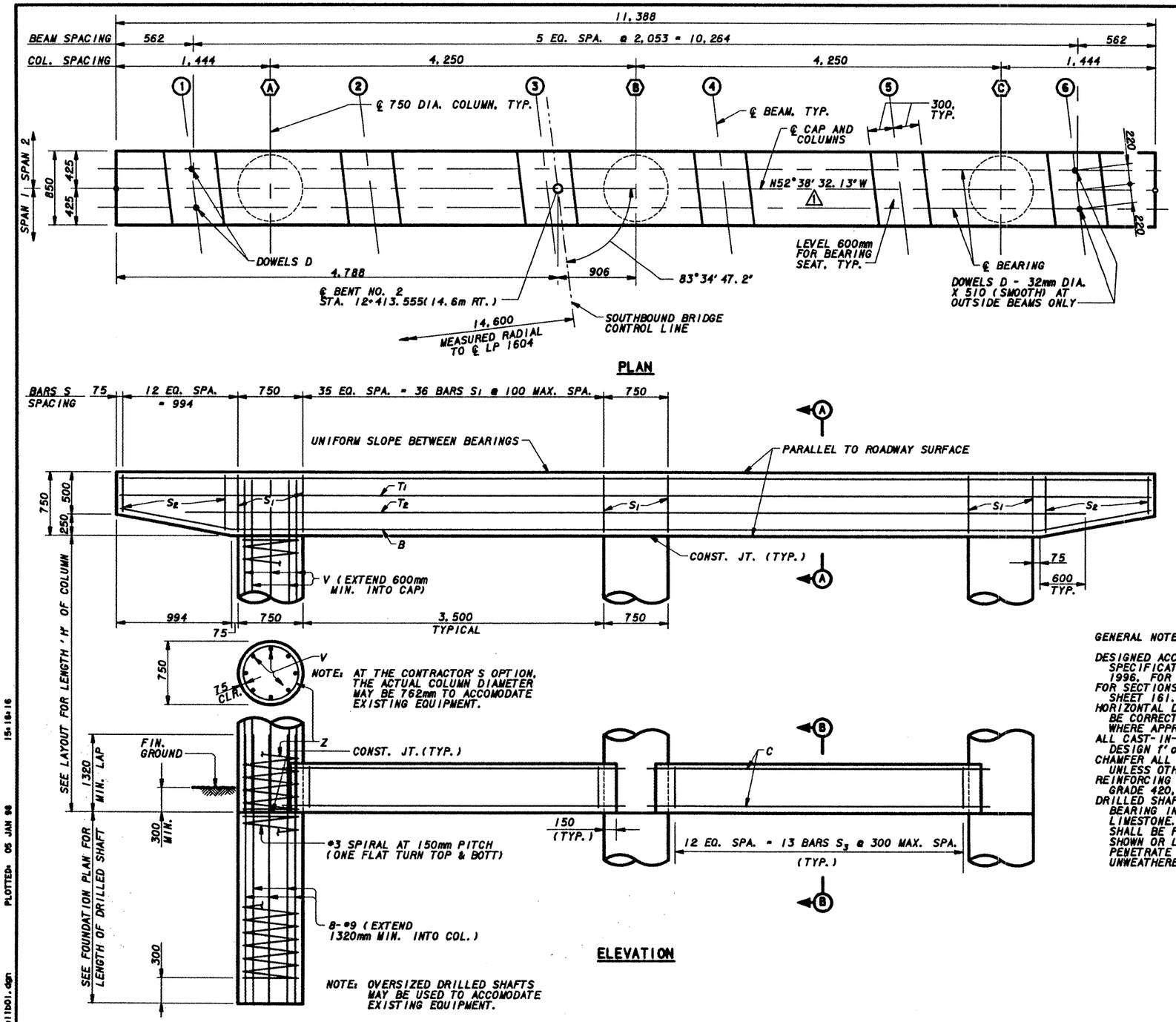

NOTE: ALL REINFORCING STEEL IN DRILLED SHAFT IS INCLUDED IN THE PRICE BID FOR DRILLED SHAFTS.

TABLE OF CONSTANT QUANTITIES

BAR	NO.	SIZE	LENGTH	MASS
A	5	#10	11,288	362
B	3	#10	11,348	219
C	16	#6	4,000	144
◆ D	4	32mm	510	14
S_1	74	#5	3,020	347
S_2	24	#5	2,790	104
S_3	26	#4	2,090	55
T_1	2	#5	11,288	36
T_2	2	#5	10,600	33
REINFORCING STEEL			kg	1,314
CLASS "C" CONCRETE			m^3	9.6

◆ - 32mm SMOOTH DOWEL

TABLE OF VARIABLE COLUMN QUANTITIES / ESTIMATED QUANTITIES

"H"	BARS Z 3 - #3 SPIRAL		BARS V 24 - #9		ESTIMATED QUANTITIES REINF STEEL	CLASS "C" CONC
	LENGTH	MASS	LENGTH	MASS	kg	m^3
3,000	41,600	70	3,600	455	525	4.0
4,000	54,210	91	4,600	582	673	5.3
5,000	66,820	112	5,600	708	820	6.6
6,000	79,430	133	6,600	834	967	8.0
7,000	92,040	155	7,600	961	1,116	9.3
8,000	104,650	176	8,600	1,087	1,263	10.6
9,000	117,260	197	9,600	1,214	1,411	11.9

ADJUST BARS Z LENGTH BY 1,261 mm AND BARS V LENGTH BY 100 mm FOR EACH 100 mm VARIATION IN "H" VALUE.
ADJUST REINFORCING STEEL TOTAL BY 9.52 kg AND CONCRETE BY 0.088 m^3 FOR EACH 100 mm VARIATION IN "H" VALUE.

GENERAL NOTES:

DESIGNED ACCORDING TO AASHTO "STANDARD SPECIFICATIONS FOR HIGHWAY BRIDGES", 1996, FOR A MS18 LOADING.
FOR SECTIONS AND BAR BENDING DIAGRAMS, SEE SHEET 161.
HORIZONTAL DIMENSIONS ARE SHOWN AND MUST BE CORRECTED FOR GRADE AND CROSS SLOPE, WHERE APPROPRIATE.
ALL CAST-IN-PLACE CONCRETE TO BE CLASS C. DESIGN f'c = 25 MPa.
CHAMFER ALL EXPOSED CONCRETE EDGES 20mm, UNLESS OTHERWISE SHOWN.
REINFORCING STEEL SHALL BE ASTM A-615, GRADE 420, EXCEPT AS NOTED.
DRILLED SHAFTS ARE DESIGNED FOR END BEARING IN GRAY, UNWEATHERED LIMESTONE. DRILLED SHAFTS SHALL BE FOUNDED AT THE ELEVATIONS SHOWN OR LOWER, AS NECESSARY, TO PENETRATE A MINIMUM OF 1.5m INTO UNWEATHERED ROCK.

FOR LENGTH OF DRILLED SHAFTS AND LOADS, SEE FOUNDATION PLAN SHEET 151.
FOR BEAM SKEW ANGLES, SEE FRAMING PLAN SHEET 162.
FOR BEARING SEAT ELEVATIONS, SEE ESTIMATED QUANTITY SUMMARY SHEET 150.
FOR TIE BEAM DETAILS, SEE SHEET 161.

(1) - DENOTES THE BEAM NUMBER
(A) - DENOTES THE DRILLED SHAFT NUMBER

NO.	DATE	REVISION	APPROV.
1	1/5/98	Revised Bearing of Bent	SWA

Texas Department of Transportation
LOOP 1604

SOUTHBOUND BRIDGE
AT HELOTES CREEK
BENT NO. 2 DETAILS

Kimley-Horn and Associates, Inc.

STATE OF TEXAS
S. N. AFTAB
80137
REGISTERED PROFESSIONAL ENGINEER
S. Nawaf Aftab
1/5/98

Change Order No. 3

Designed SWA	DIST	FED RDS	FEDERAL AID PROJECT *					HIGHWAY
Checked DKK	15	6	CD 2452-01-035					LP1604
Drawn JTK	COUNTY			CONTROL	SECT	JOB		SHEET
Checked SWA	BEXAR			2452	01	035		159

3 OF 5

A

FILENAME: p:\67316-03\ha11b01.dgn PLOTTED: 05 JAN 98 15:18:16

LEVELS DISPLAYED
1 2 3 4 5 6 7 8 9 10 11 12 13 14 15 16
17 18 19 20 21 22 23 24 25 26 27 28 29 30 31 32
33 34 35 36 37 38 39 40 41 42 43 44 45 46 47 48
49 50 51 52 53 54 55 56 57 58 59 60 61 62 63

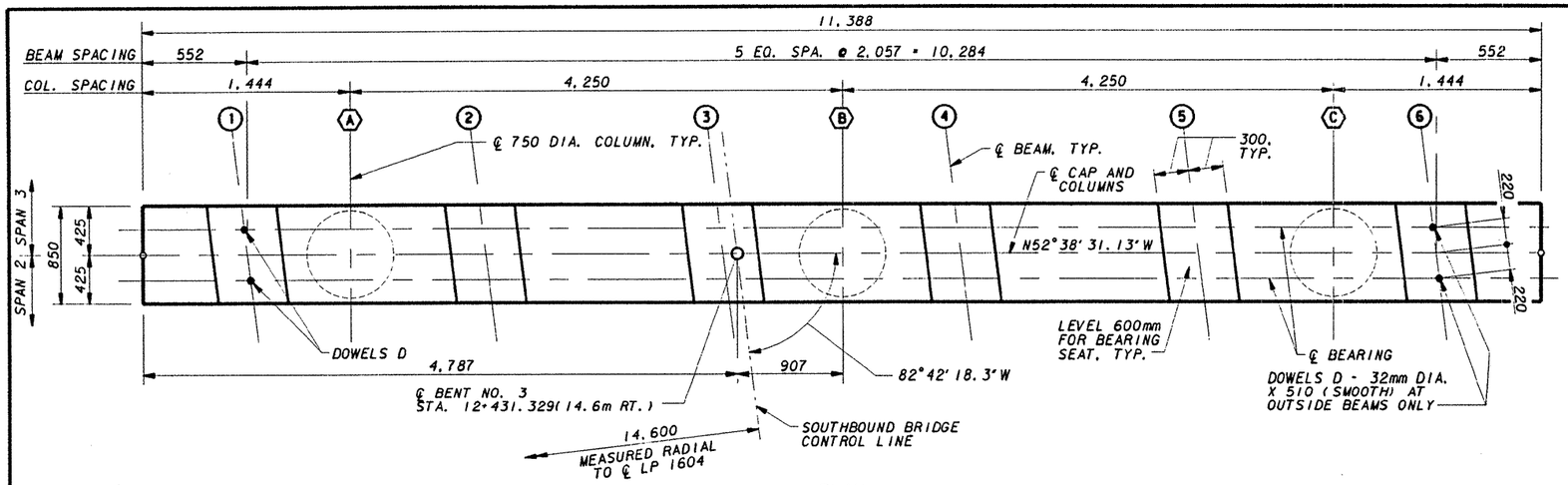

PLAN

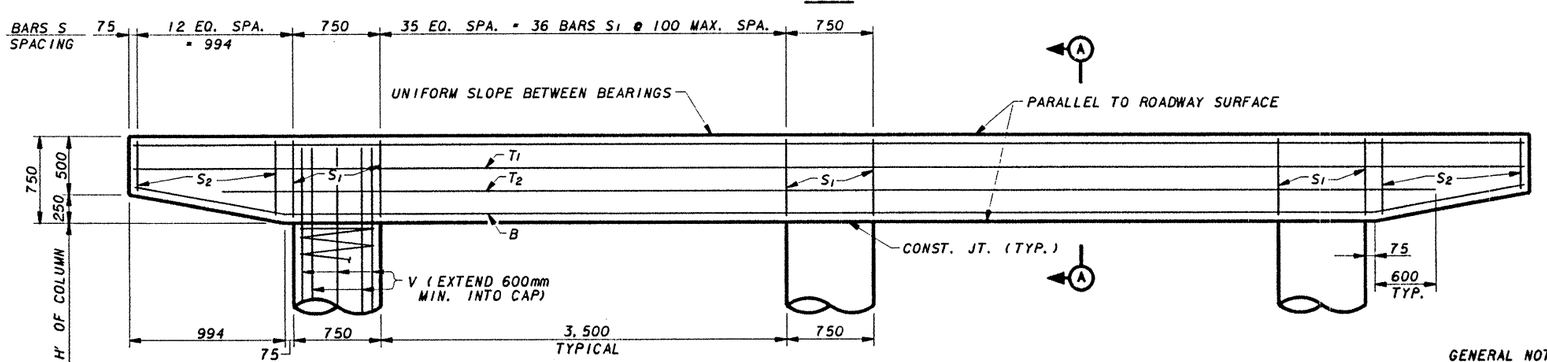

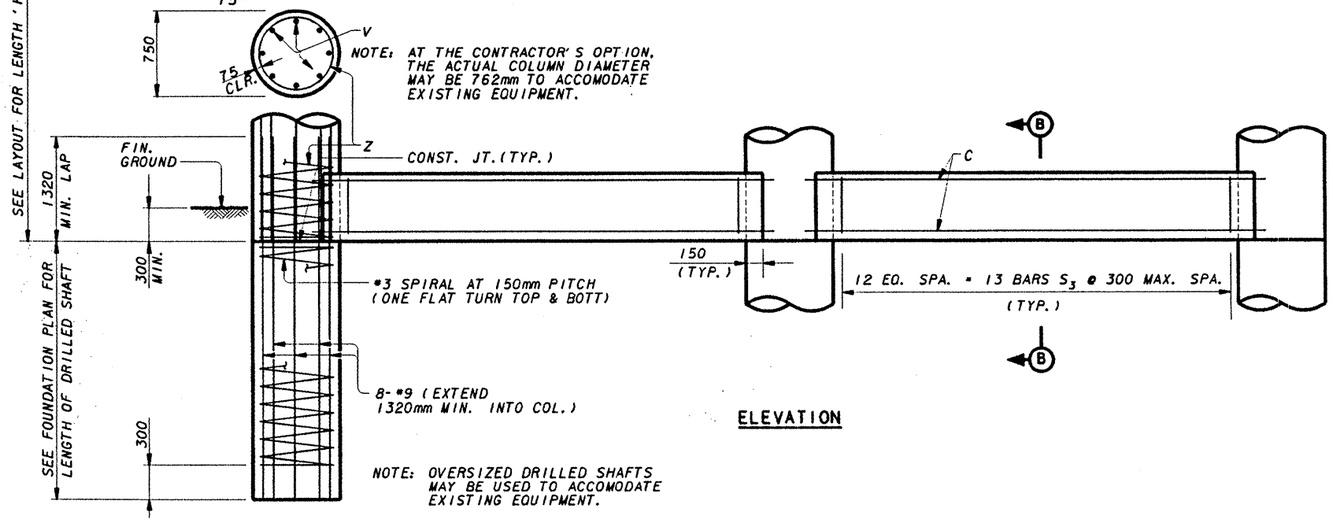

ELEVATION

NOTE: ALL REINFORCING STEEL IN DRILLED SHAFT IS INCLUDED IN THE PRICE BID FOR DRILLED SHAFTS.

TABLE OF CONSTANT QUANTITIES

BAR	NO.	SIZE	LENGTH	MASS
A	5	#10	11,288	362
B	3	#10	11,348	219
C	16	#6	4,000	144
◆ D	4	32mm	510	14
S_1	74	#5	3,020	347
S_2	24	#5	2,790	104
S_3	26	#4	2,090	55
T_1	2	#5	11,288	36
T_2	2	#5	10,600	33
REINFORCING STEEL			kg	1,314
CLASS "C" CONCRETE			m^3	9.6

◆ - 32mm SMOOTH DOWEL

TABLE OF VARIABLE COLUMN QUANTITIES / ESTIMATED QUANTITIES

"H"	BARS Z 3 - #3 SPIRAL		BARS V 24 - #9		REINF STEEL	CLASS "C" CONC
	LENGTH	MASS	LENGTH	MASS	kg	m^3
3,000	41,600	70	3,600	455	525	4.0
4,000	54,210	91	4,600	582	673	5.3
5,000	66,820	112	5,600	708	820	6.6
6,000	79,430	133	6,600	834	967	8.0
7,000	92,040	155	7,600	961	1,116	9.3
8,000	104,650	176	8,600	1,087	1,263	10.6
9,000	117,260	197	9,600	1,214	1,411	11.9

ADJUST BARS Z LENGTH BY 1,261 mm AND BARS V LENGTH BY 100 mm FOR EACH 100 mm VARIATION IN "H" VALUE.
ADJUST REINFORCING STEEL TOTAL BY 9.52 kg AND CONCRETE BY 0.088 m^3 FOR EACH 100 mm VARIATION IN "H" VALUE.

GENERAL NOTES:

DESIGNED ACCORDING TO AASHTO "STANDARD SPECIFICATIONS FOR HIGHWAY BRIDGES", 1996, FOR A MS18 LOADING.
FOR SECTIONS AND BAR BENDING DIAGRAMS, SEE SHEET 161.
HORIZONTAL DIMENSIONS ARE SHOWN AND MUST BE CORRECTED FOR GRADE AND CROSS SLOPE, WHERE APPROPRIATE.
ALL CAST-IN-PLACE CONCRETE TO BE CLASS C. DESIGN f'c = 25 MPa.
CHAMFER ALL EXPOSED CONCRETE EDGES 20mm, UNLESS OTHERWISE SHOWN.
REINFORCING STEEL SHALL BE ASTM A-615, GRADE 420, EXCEPT AS NOTED.
DRILLED SHAFTS ARE DESIGNED FOR END BEARING IN GRAY, UNWEATHERED LIMESTONE. DRILLED SHAFTS SHALL BE FOUNDED AT THE ELEVATIONS SHOWN OR LOWER, AS NECESSARY, TO PENETRATE A MINIMUM OF 1.5m INTO UNWEATHERED ROCK.

FOR LENGTH OF DRILLED SHAFTS AND LOADS, SEE FOUNDATION PLAN SHEET 151.
FOR BEAM SKEW ANGLES, SEE FRAMING PLAN SHEET 162.
FOR BEARING SEAT ELEVATIONS, SEE ESTIMATED QUANTITY SUMMARY SHEET 150.
FOR TIE BEAM DETAILS, SEE SHEET 161.

(1) - DENOTES THE BEAM NUMBER
(A) - DENOTES THE DRILLED SHAFT NUMBER

STATE OF TEXAS
S. N. AFTAB
80137
REGISTERED PROFESSIONAL ENGINEER
S. Naved Aftab
5/2/97

NO.	DATE	REVISION	APPROV.

Texas Department of Transportation
LOOP 1604

SOUTHBOUND BRIDGE AT HELOTES CREEK

BENT NO. 3 DETAILS

Kimley-Horn and Associates, Inc.

Designed SNA	DIST	FED REG	FEDERAL AID PROJECT #				HIGHWAY
Checked DKK	15	6	CD 2452-01-035				LP1604
Drawn JTK	COUNTY		CONTROL	SECT	JOB		SHEET
Checked SNA	BEXAR		2452	01	035		160

FILENAME: p:\67316-03\hel1b02.dgn PLOTTED: 01 MAY 97 19:42:03

LEVELS DISPLAYED
1 2 3 4 5 6 7 8 9 10 11 12 13 14 15 16
17 18 19 20 21 22 23 24 25 26 27 28 29 30 31 32
33 34 35 36 37 38 39 40 41 42 43 44 45 46 47 48
49 50 51 52 53 54 55 56 57 58 59 60 61 62 63

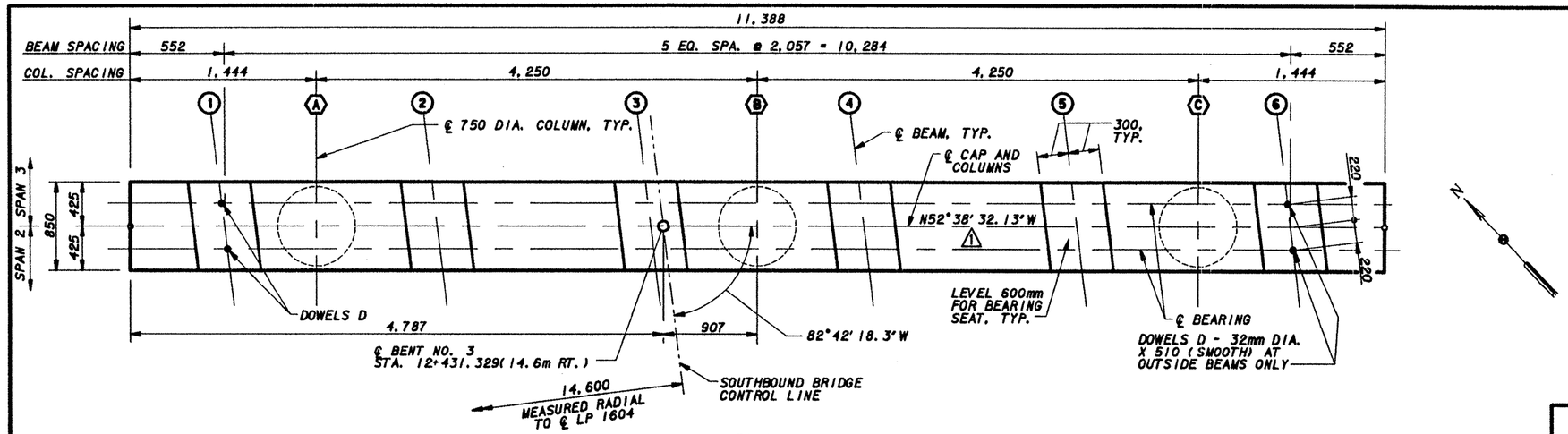

PLAN

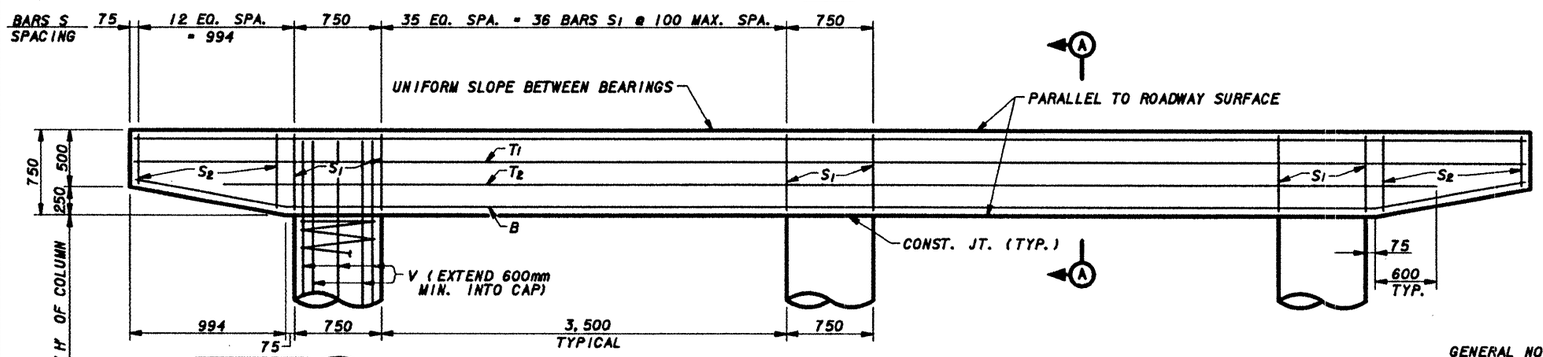

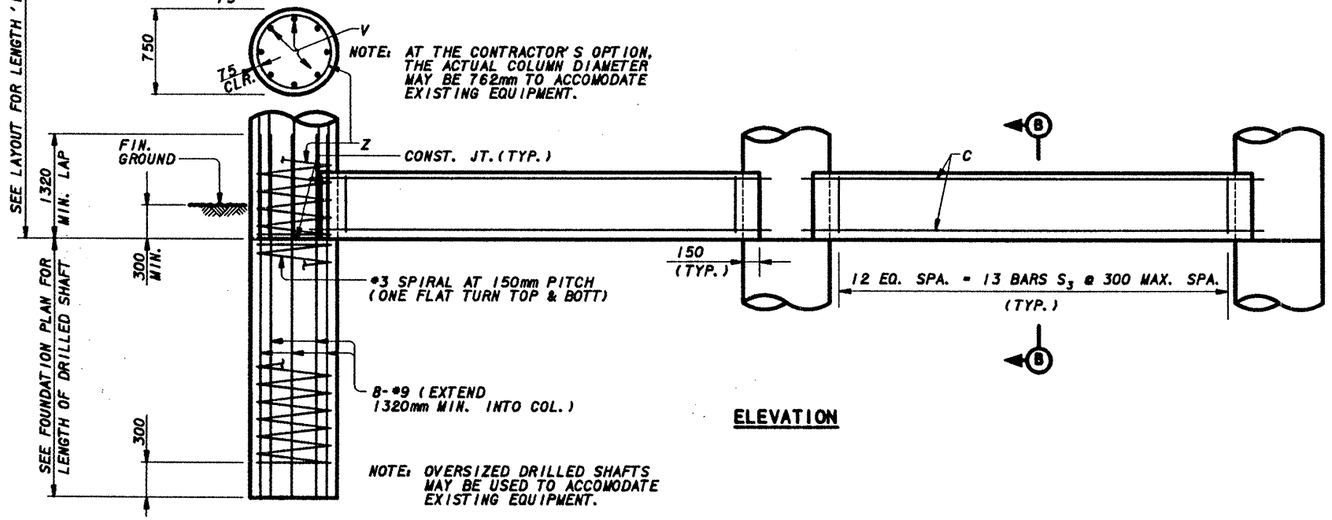

ELEVATION

NOTE: ALL REINFORCING STEEL IN DRILLED SHAFT IS INCLUDED IN THE PRICE BID FOR DRILLED SHAFTS.

TABLE OF CONSTANT QUANTITIES

BAR	NO.	SIZE	LENGTH	MASS
A	5	#10	11,288	362
B	3	#10	11,348	219
C	16	#6	4,000	144
D	4	32mm	510	14
S_1	74	#5	3,020	347
S_2	24	#5	2,790	104
S_3	26	#4	2,090	55
T_1	2	#5	11,288	36
T_2	2	#5	10,600	33
REINFORCING STEEL			kg	1,314
CLASS "C" CONCRETE			m^3	9.6

◆ - 32mm SMOOTH DOWEL

TABLE OF VARIABLE COLUMN QUANTITIES / ESTIMATED QUANTITIES

"H"	BARS Z 3 - #3 SPIRAL		BARS V 24 - #9		REINF STEEL	CLASS "C" CONC
	LENGTH	MASS	LENGTH	MASS	kg	m^3
3,000	41,600	70	3,600	455	525	4.0
4,000	54,210	91	4,600	582	673	5.3
5,000	66,820	112	5,600	708	820	6.6
6,000	79,430	133	6,600	834	967	8.0
7,000	92,040	155	7,600	961	1,116	9.3
8,000	104,650	176	8,600	1,087	1,263	10.6
9,000	117,260	197	9,600	1,214	1,411	11.9

ADJUST BARS Z LENGTH BY 1,261 mm AND BARS V LENGTH BY 100 mm FOR EACH 100 mm VARIATION IN "H" VALUE.
ADJUST REINFORCING STEEL TOTAL BY 9.52 kg AND CONCRETE BY 0.088 m^3 FOR EACH 100 mm VARIATION IN "H" VALUE.

GENERAL NOTES:

DESIGNED ACCORDING TO AASHTO "STANDARD SPECIFICATIONS FOR HIGHWAY BRIDGES", 1996, FOR A MS18 LOADING.
FOR SECTIONS AND BAR BENDING DIAGRAMS, SEE SHEET 161.
HORIZONTAL DIMENSIONS ARE SHOWN AND MUST BE CORRECTED FOR GRADE AND CROSS SLOPE, WHERE APPROPRIATE.
ALL CAST-IN-PLACE CONCRETE TO BE CLASS C. DESIGN f'c = 25 MPa.
CHAMFER ALL EXPOSED CONCRETE EDGES 20mm, UNLESS OTHERWISE SHOWN.
REINFORCING STEEL SHALL BE ASTM A-615, GRADE 420, EXCEPT AS NOTED.
DRILLED SHAFTS ARE DESIGNED FOR END BEARING IN GRAY, UNWEATHERED LIMESTONE. DRILLED SHAFTS SHALL BE FOUNDED AT THE ELEVATIONS SHOWN OR LOWER, AS NECESSARY, TO PENETRATE A MINIMUM OF 1.5m INTO UNWEATHERED ROCK.

FOR LENGTH OF DRILLED SHAFTS AND LOADS, SEE FOUNDATION PLAN SHEET 151.
FOR BEAM SKEW ANGLES, SEE FRAMING PLAN SHEET 162.
FOR BEARING SEAT ELEVATIONS, SEE ESTIMATED QUANTITY SUMMARY SHEET 150.
FOR TIE BEAM DETAILS, SEE SHEET 161.

(1) - DENOTES THE BEAM NUMBER
(A) - DENOTES THE DRILLED SHAFT NUMBER

STATE OF TEXAS
S. N. AFTAB
80137
REGISTERED PROFESSIONAL ENGINEER

S. Nawaz Aftab
1/5/98

Change Order No. 3

NO.	DATE	REVISION	APPROV.
1	1/5/98	Revised Bearing of Bent	SNA

Texas Department of Transportation
LOOP 1604

SOUTHBOUND BRIDGE AT HELOTES CREEK

BENT NO. 3 DETAILS

Kimley-Horn and Associates, Inc.

Designed SNA	DIST	FED RD	FEDERAL AID PROJECT #					HIGHWAY
Checked DKK	15	6	CD 2452-01-035					LP1604
Drawn JTK	COUNTY			CONTROL	SECT	JOB		SHEET
Checked SNA	BEXAR			2452	01	035		160

4 OF 5

A

FILENAME: pw:\87316-03\bri1b02.dgn PLOTTED: 05 JAN 98 15:16:39

LEVELS DISPLAYED

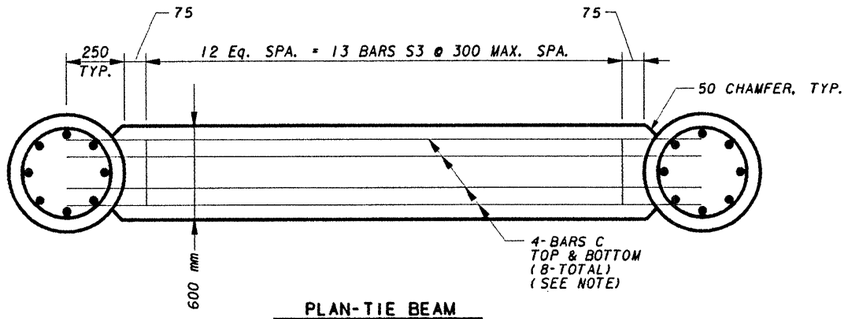

PLAN-TIE BEAM

(SHOWING ONE BAY ONLY)
NOTE: ADJUST TIE BEAM REINFORCING TO FIT WITHIN COLUMN/D.S. REINFORCING CAGE

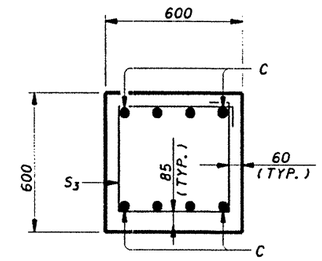

SECTION B-B

GENERAL NOTES:

DESIGNED ACCORDING TO AASHTO "STANDARD SPECIFICATIONS FOR HIGHWAY BRIDGES", 1996, FOR A MS18 LOADING.
FOR PLAN AND ELEVATIONS OF BENTS, SEE SHEETS 157-160.
BARS C MAY BE DRILLED & EPOXY GROUTED INTO THE COLUMNS.

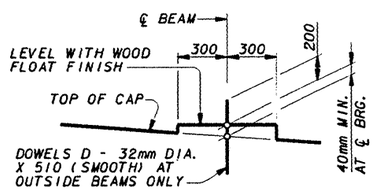

BEARING SEAT DETAIL

(BEARING SURFACE SHALL BE CLEAN AND FREE OF ALL LOOSE MATERIAL BEFORE PLACING BEARING PAD.)

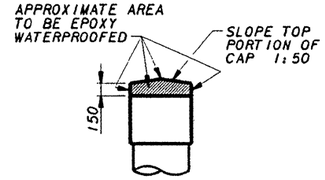

WATERPROOFING DETAIL

NOTE:
THE FRONT, BACK, ENDS AND TOP OF THE CAP AS SHOWN, SHALL BE EPOXY WATERPROOFED. (EXCEPT BEARING SEAT BUILD-UPS) AS PER ITEM "EPOXY WATERPROOFING".

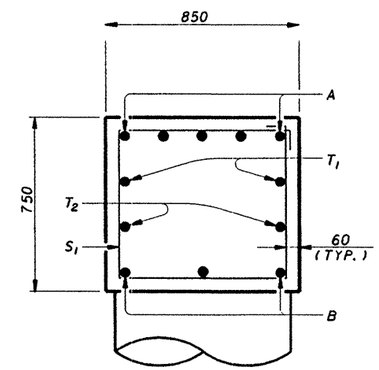

SECTION A-A

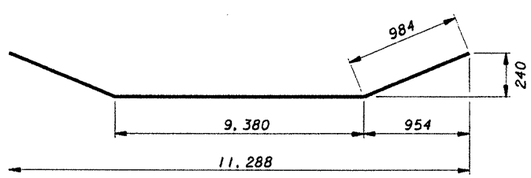

BARS B

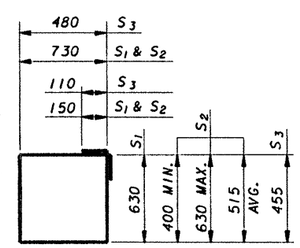

BARS S

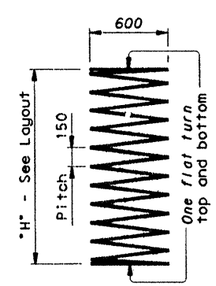

BARS Z

BAR BENDING DIAGRAMS

LEVELS DISPLAYED																																	
1	2	3	4	5	6	7	8	9	10	11	12	13	14	15	16																		
17	18	19	20	21	22	23	24	25	26	27	28	29	30	31	32																		
33	34	35	36	37	38	39	40	41	42	43	44	45	46	47	48																		
49	50	51	52	53	54	55	56	57	58	59	60	61	62	63																			

NO.	DATE	REVISION	APPROV.

Texas Department of Transportation
LOOP 1604

NORTHBOUND & SOUTHBOUND
BRIDGE AT HELOTES CREEK

TYPICAL BENT DETAILS

Kimley-Horn and Associates, Inc.

STATE OF TEXAS
S. N. AFTAB
80137
REGISTERED PROFESSIONAL ENGINEER

S. Naved Aftab
5/2/97

Designed	SNA	DIST	FED REG	FEDERAL AID PROJECT #				HIGHWAY	
Checked	DKK	15	6	CD 2452-01-035				LP1604	
Drawn	DKK	COUNTY			CONTROL	SECT	JOB	SHEET	
Checked	SNA	BEXAR			2452	01	035	161	

5 OF 5

FILENAME: p:\67316-03\he11605.dgn PLOTTED: 01 MAY 97 19:11:07

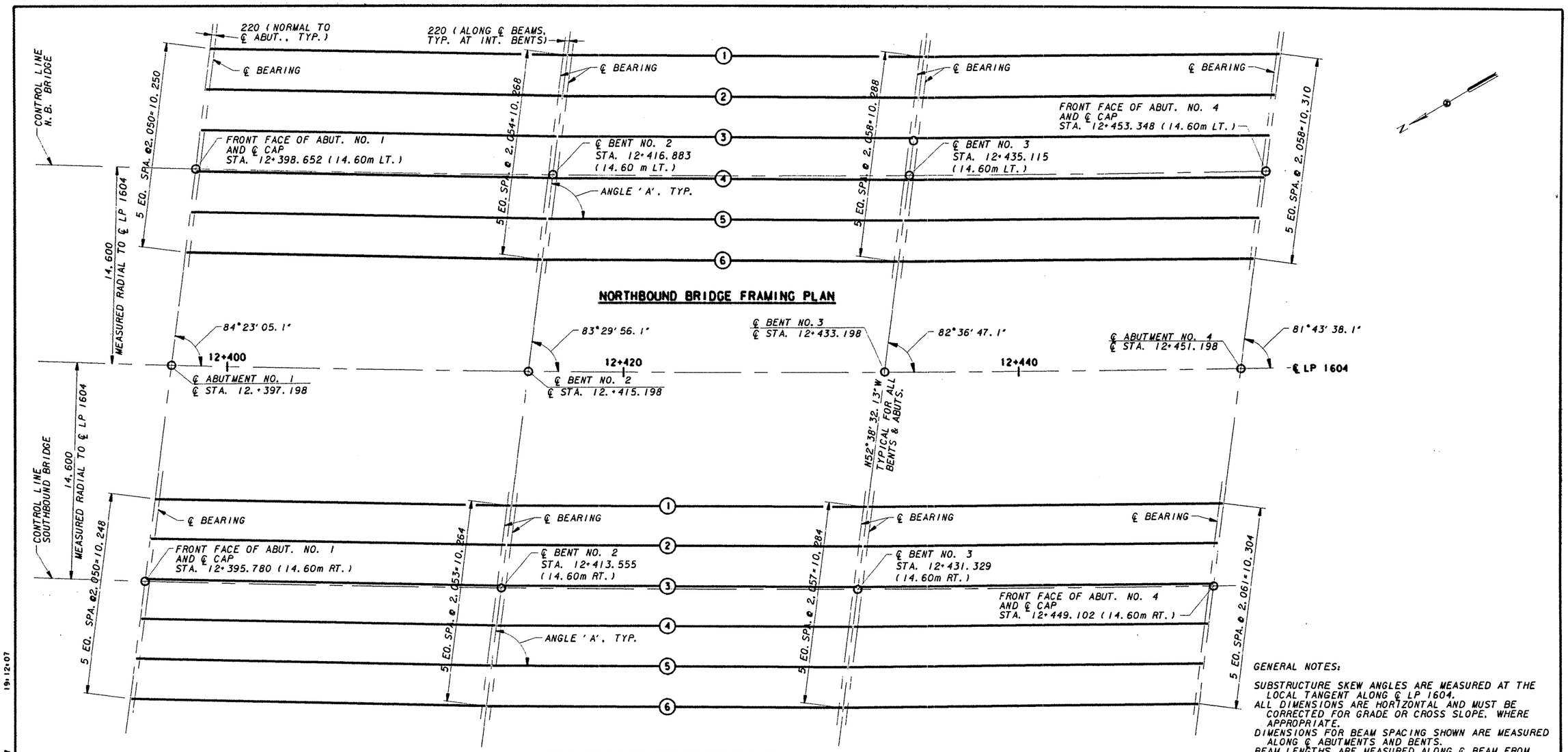

GENERAL NOTES:

SUBSTRUCTURE SKEW ANGLES ARE MEASURED AT THE LOCAL TANGENT ALONG ℄ LP 1604.
ALL DIMENSIONS ARE HORIZONTAL AND MUST BE CORRECTED FOR GRADE OR CROSS SLOPE. WHERE APPROPRIATE.
DIMENSIONS FOR BEAM SPACING SHOWN ARE MEASURED ALONG ℄ ABUTMENTS AND BENTS.
BEAM LENGTHS ARE MEASURED ALONG ℄ BEAM FROM ℄ BEARING TO ℄ BEARING.

(1) - DENOTES THE BEAM NUMBER

BEAM DATA - NORTHBOUND BRIDGE

BEAM NO.	LOCATION	SPAN 1	SPAN 2	SPAN 3
1	ANGLE 'A'	83°49' 56. 2"	82°55' 49"	82°1' 41. 6"
	LENGTH	17. 537	17. 565	17. 539
2	ANGLE 'A'	83°50' 35. 5"	82°56' 34. 1"	82°2' 32. 6"
	LENGTH	17. 537	17. 564	17. 538
3	ANGLE 'A'	83°51' 14. 9"	82°57' 19. 5"	82°3' 23. 7"
	LENGTH	17. 536	17. 564	17. 537
4	ANGLE 'A'	83°51' 54. 3"	82°58' 4. 7"	82°4' 14. 9"
	LENGTH	17. 536	17. 563	17. 537
5	ANGLE 'A'	83°52' 33. 7"	82°58' 49. 9"	82°5' 5. 8"
	LENGTH	17. 536	17. 563	17. 536
6	ANGLE 'A'	83°53' 13. 2"	82°59' 35. 1"	82°5' 56. 9"
	LENGTH	17. 535	17. 562	17. 536

BEAM DATA - SOUTHBOUND BRIDGE

BEAM NO.	LOCATION	SPAN 1	SPAN 2	SPAN 3
1	ANGLE 'A'	83°59' 44. 4"	83°7' 4"	82°14' 23. 7"
	LENGTH	17. 532	17. 558	17. 530
2	ANGLE 'A'	84°0' 21. 7"	83°7' 46. 7"	82°15' 12. 2"
	LENGTH	17. 531	17. 557	17. 529
3	ANGLE 'A'	84°0' 59"	83°8' 29. 6"	82°16' 0. 5"
	LENGTH	17. 531	17. 557	17. 528
4	ANGLE 'A'	84°1' 36. 5"	83°9' 12. 5"	82°16' 48. 9"
	LENGTH	17. 531	17. 556	17. 528
5	ANGLE 'A'	84°2' 13. 9"	83°9' 55. 4"	82°17' 37. 4"
	LENGTH	17. 530	17. 556	17. 527
6	ANGLE 'A'	84°2' 51. 2"	83°10' 38. 3"	82°18' 25. 7"
	LENGTH	17. 530	17. 555	17. 527

NO.	DATE	REVISION	APPROV.

Texas Department of Transportation
LOOP 1604

NORTHBOUND AND SOUTHBOUND BRIDGE AT HELOTES CREEK

FRAMING PLAN

Kimley-Horn and Associates, Inc.

STATE OF TEXAS
S. N. AFTAB
80137
REGISTERED PROFESSIONAL ENGINEER
5/2/97

Designed SNA	DIST	FED REG	FEDERAL AID PROJECT #			HIGHWAY
Checked DKK	15	6	CO 2452-01-035			LP1604
Drawn JTK	COUNTY		CONTROL	SECT	JOB	SHEET
Checked SNA	BEXAR		2452	01	035	162

FILENAME= pr\67316-03\helf-01.dgn PLOTTED= 01 MAY 97 19.12.07

LEVELS DISPLAYED

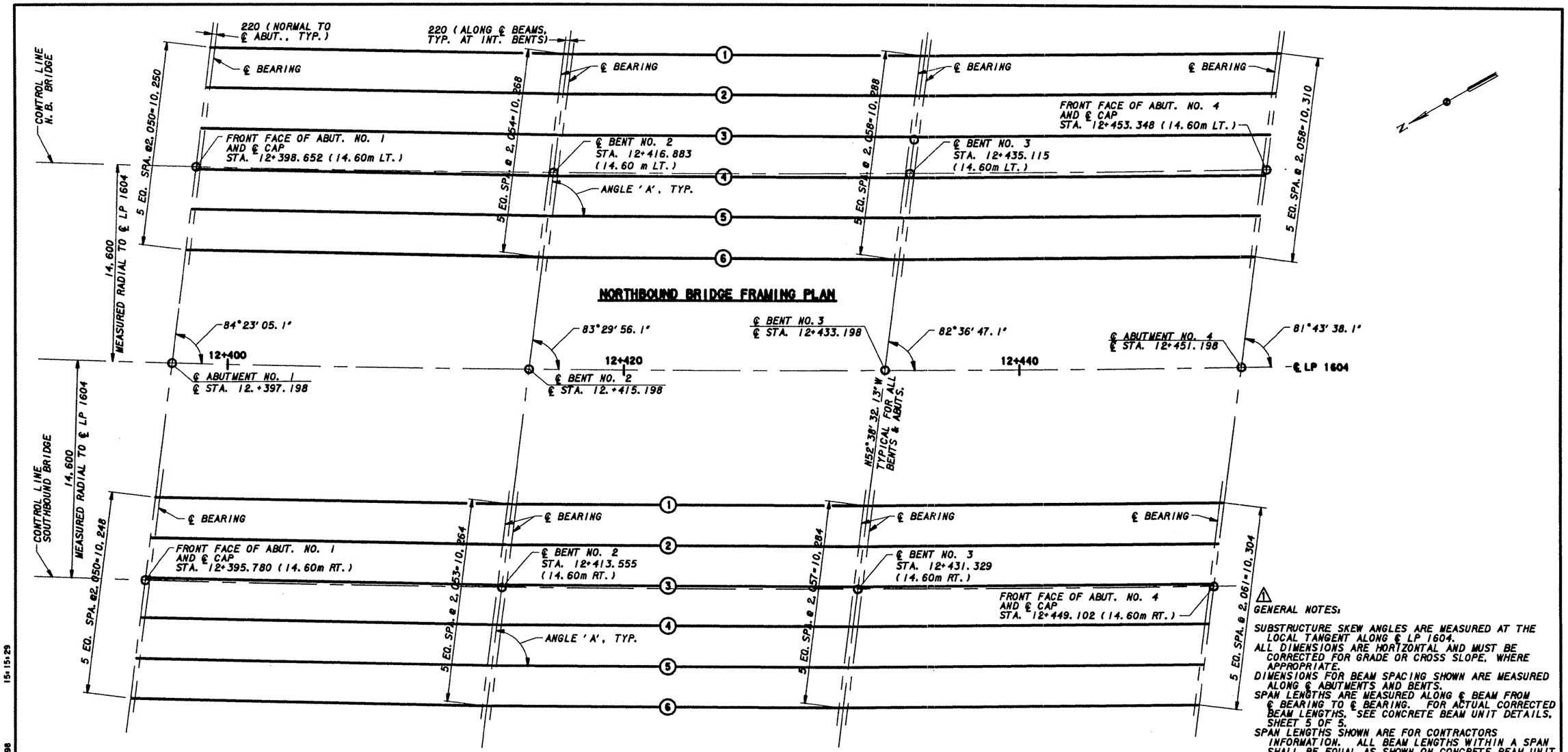

⚠ GENERAL NOTES:

SUBSTRUCTURE SKEW ANGLES ARE MEASURED AT THE LOCAL TANGENT ALONG ℄ LP 1604.
ALL DIMENSIONS ARE HORIZONTAL AND MUST BE CORRECTED FOR GRADE OR CROSS SLOPE, WHERE APPROPRIATE.
DIMENSIONS FOR BEAM SPACING SHOWN ARE MEASURED ALONG ℄ ABUTMENTS AND BENTS.
SPAN LENGTHS ARE MEASURED ALONG ℄ BEAM FROM ℄ BEARING TO ℄ BEARING. FOR ACTUAL CORRECTED BEAM LENGTHS, SEE CONCRETE BEAM UNIT DETAILS, SHEET 5 OF 5.
SPAN LENGTHS SHOWN ARE FOR CONTRACTORS INFORMATION. ALL BEAM LENGTHS WITHIN A SPAN SHALL BE EQUAL AS SHOWN ON CONCRETE BEAM UNIT DETAILS, SHEET 5 OF 5.

(1) - DENOTES THE BEAM NUMBER

BEAM DATA - NORTHBOUND BRIDGE

BEAM NO.	LOCATION	⚠ SPAN 1	SPAN 2	⚠ SPAN 3
1	ANGLE 'A'	83°49' 56.2"	82°55' 49"	82°1' 41.6"
	LENGTH	17.562	17.565	17.564
2	ANGLE 'A'	83°50' 35.5"	82°56' 34.1"	82°2' 32.6"
	LENGTH	17.562	17.564	17.563
3	ANGLE 'A'	83°51' 14.9"	82°57' 19.5"	82°3' 23.7"
	LENGTH	17.562	17.564	17.563
4	ANGLE 'A'	83°51' 54.3"	82°58' 4.7"	82°4' 14.9"
	LENGTH	17.561	17.563	17.562
5	ANGLE 'A'	83°52' 33.7"	82°58' 49.9"	82°5' 5.8"
	LENGTH	17.561	17.563	17.561
6	ANGLE 'A'	83°53' 13.2"	82°59' 35.1"	82°5' 56.9"
	LENGTH	17.560	17.562	17.561

BEAM DATA - SOUTHBOUND BRIDGE

BEAM NO.	LOCATION	⚠ SPAN 1	SPAN 2	⚠ SPAN 3
1	ANGLE 'A'	83°59' 44.4"	83°7' 4"	82°14' 23.7"
	LENGTH	17.557	17.558	17.555
2	ANGLE 'A'	84°0' 21.7"	83°7' 46.7"	82°15' 12.2"
	LENGTH	17.557	17.557	17.554
3	ANGLE 'A'	84°0' 59"	83°8' 29.6"	82°16' 0.5"
	LENGTH	17.556	17.557	17.554
4	ANGLE 'A'	84°1' 36.5"	83°9' 12.5"	82°16' 48.9"
	LENGTH	17.556	17.556	17.553
5	ANGLE 'A'	84°2' 13.9"	83°9' 55.4"	82°17' 37.4"
	LENGTH	17.556	17.556	17.553
6	ANGLE 'A'	84°2' 51.2"	83°10' 38.3"	82°18' 25.7"
	LENGTH	17.555	17.555	17.552

NO.	DATE	REVISION	APPROV.
1	1/5/98	Revised Span Lengths, Span 1 & 3	SNA

Texas Department of Transportation
LOOP 1604

NORTHBOUND AND SOUTHBOUND BRIDGE AT HELOTES CREEK

FRAMING PLAN

Kimley-Horn and Associates, Inc.

Designed SNA	DIST	FED RD	FEDERAL AID PROJECT #				HIGHWAY
Checked DKK	15	6	CD 2452-01-035				LP1604
Drawn JTK	COUNTY			CONTROL	SECT	JOB	SHEET
Checked SNA	BEXAR			2452	01	035	162

STATE OF TEXAS S. N. AFTAB 80137 REGISTERED PROFESSIONAL ENGINEER

S. Nawab Aftab 1/5/98

Change Order No. 3

PLOTTED: 05 JAN 98 15:15:29

FILENAME: g:\67316-03\hel1r01.dgn

LEVELS DISPLAYED

STRUCTURE	DESIGNED BEAMS (DEPRESSED STRANDS)													OPTIONAL DESIGN		
	SPAN NO.	BEAM NO.	BEAM TYPE	NON-STD STRAND PATTERN	PRESTRESSING STRANDS							CONCRETE		DESIGN LOAD COMP STRESS (TOP ℄) fct (MPa)	DESIGN LOAD TENSILE STRESS (BOTT ℄) fcb (MPa)	REQUIRED MINIMUM ULTIMATE MOMENT CAPACITY (kN·m)
					TOTAL					DEPRESSED		RELEASE STRGTH f'ci (MPa)	MINIMUM 28 DAY COMP STRGTH f'c (MPa)			
					NO.	SIZE (mm)	STRGTH f's (MPa)	"e" ℄ (mm)	"e" END (mm)	NO.	TO (mm)					
HELOTES CREEK	ALL	1 & 6	B		22	13	1,860	278	196	6	455	39.8	39.8	19.4	-25.3	3,048
	ALL	2 - 5	B		20	13	1,860	284	194	6	455	36.1	36.1	19.3	-24.2	2,788

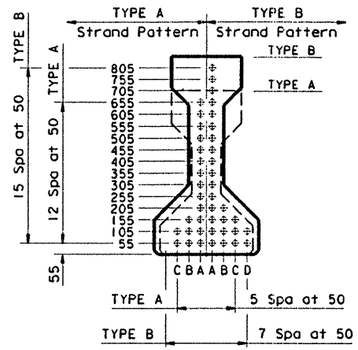

TYPE A & TYPE B BEAM

NON-STANDARD STRAND PATTERNS

PATTERN	STRAND ARRANGEMENT AT ℄ OF BEAM

GENERAL NOTES:

Designed in accordance with current AASHTO Standard Specifications.

All concrete shall be Class H. All reinforcing bars shall be Grade 420.

When shown on this sheet, the Fabricator has the option of furnishing either the designed depressed strand beam or an approved optional design. All optional design submittals and shop drawings shall be signed, sealed and dated by a registered Professional Engineer.

Optional designs for beams 36,000 mm or longer shall have a calculated residual camber equal to or greater than that of the designed beam.

Prestress losses for the designed beams have been calculated for a relative humidity of 70 percent. Optional designs shall likewise conform.

Certain beams with depressed strands are subject to cracking in the end of the beam. When such cracks occur, all subsequent beams of the same type and strand pattern shall have strands debonded in the following manner:

1. Alternate rows of depressed strands shall be debonded for 600 mm from each end of the beam.
2. One half of the straight strands, as nearly as possible, shall be debonded for 1,200 mm from each end of the beam.
3. The debonding pattern shall be symmetrical about the vertical axis of the beam for both depressed and straight strands.
4. Strands shall be debonded so that the centers of gravity of the depressed strands and the straight strands will remain within 25 mm of their original location.
5. Strands shall be encased in plastic tubing along entire debonded length, and ends of tubing shall be sealed with waterproof tape. Split plastic tubing may be used provided the seam of the tubing is sufficiently sealed with waterproof tape to prohibit grout infiltration. Wrapping of strands with tape to provide debonding will not be permitted.
6. Revised shop drawings will not be required.

For depressed strand designed beams, strands shall be located as low as possible on the 50 mm grid system unless a Non-Standard Strand Pattern is indicated. Fill row "55", then row "105", then row "155", etc., beginning each row in the "A" position and working outward until the required number of strands is reached. All strands in the "A" position shall be depressed, maintaining the 50 mm spacing so that, at the beam ends, the upper two strands are in the position shown in the table.

Strands for the designed beam shall be 13 mm 1860 MPa low relaxation strands pretensioned to 138 kN each.

STATE OF TEXAS
S. N. AFTAB
80137
REGISTERED PROFESSIONAL ENGINEER

S. Naved Aftab
5/2/97

NO.	DATE	REVISION	APPROV.

Texas Department of Transportation
LOOP 1604

PRESTRESSED
CONCRETE I-BEAMS
(NON-STANDARD SPANS)

I BNS(M)

Kimley-Horn and Associates, Inc.

Designed SNA	DIST	FED REG	FEDERAL AID PROJECT #					HIGHWAY
Checked DKK	15	6	CD 2452-01-035					LP1604
Drawn JTK	COUNTY			CONTROL	SECT	JOB		SHEET
Checked SNA	BEXAR			2452	01	035		163

FILENAME: pr\67316-03\helbeam.dgn PLOTTED: 01 MAY 97 19:14:55

LEVELS DISPLAYED

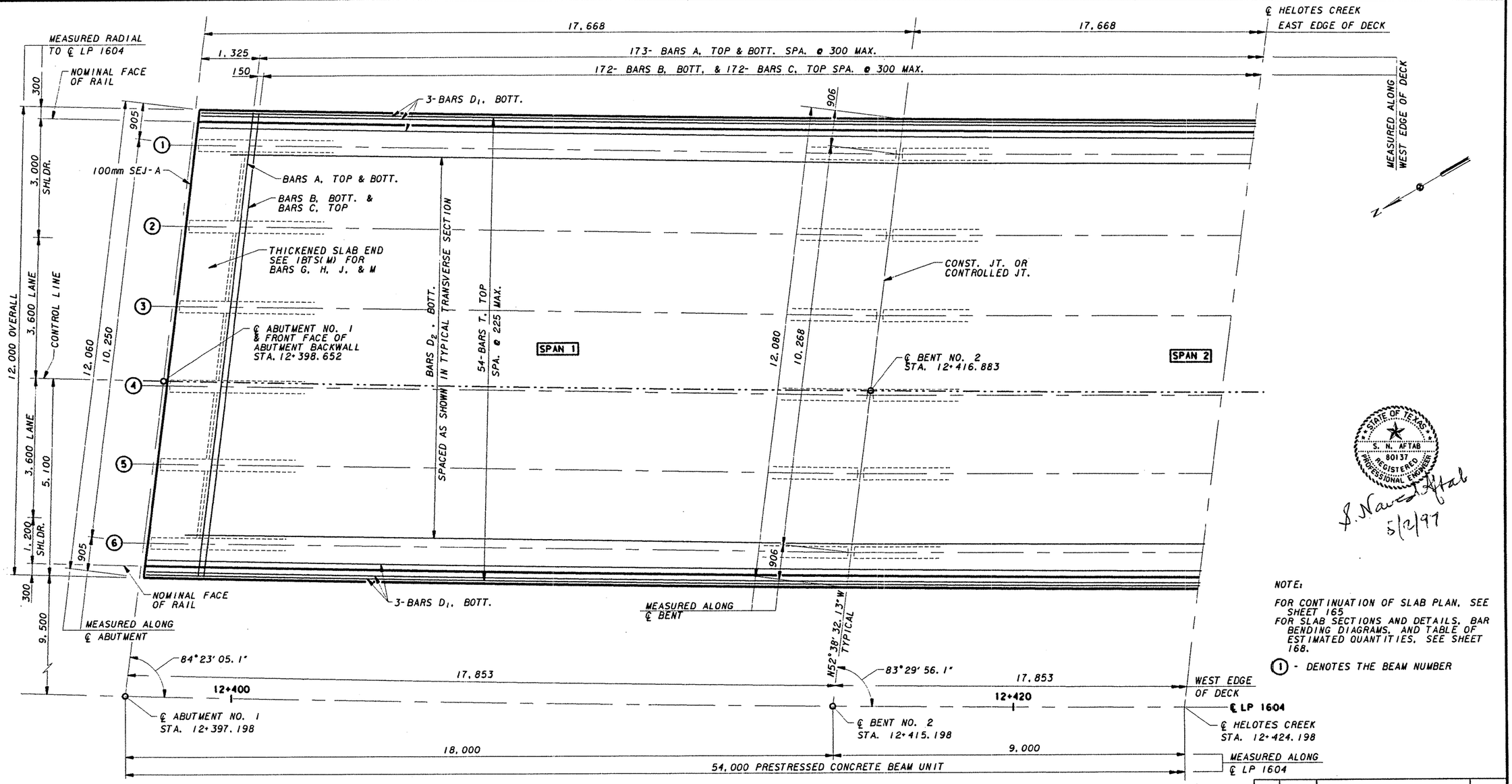

PLAN

NOTE:

FOR CONTINUATION OF SLAB PLAN, SEE SHEET 165
FOR SLAB SECTIONS AND DETAILS, BAR BENDING DIAGRAMS, AND TABLE OF ESTIMATED QUANTITIES, SEE SHEET 168.

(1) - DENOTES THE BEAM NUMBER

STATE OF TEXAS
S. N. AFTAB
80137
REGISTERED PROFESSIONAL ENGINEER
S. Nawab Aftab
5/2/97

GENERAL NOTES:

DESIGNED ACCORDING TO AASHTO "STANDARD SPECIFICATIONS FOR HIGHWAY BRIDGES", 1996, FOR A MS-18 LOADING.
ALL DIMENSIONS ARE IN MILLIMETERS, UNLESS OTHERWISE NOTED.
HORIZONTAL DIMENSIONS ARE SHOWN AND MUST BE CORRECTED FOR GRADE AND CROSS SLOPE, WHERE APPROPRIATE.
ALL CAST-IN-PLACE CONCRETE SHALL BE CLASS S. DESIGN f'c = 28 MPa.
REINFORCING STEEL SHALL BE ASTM A-615, GRADE 420.
CHAMFER ALL EXPOSED CONCRETE EDGES 20mm, UNLESS OTHERWISE SHOWN.

FOR CONTINUOUS PLACEMENT, THE MINIMUM RATE OF CONCRETE PLACING AND FINISHING SHALL BE NOT LESS THAN 9 LINEAL METERS PER HOUR.
FOR END DIAFRAM OPTIONS, SEE STANDARD DRAWING 1BDO(M).
FOR CONTROL JOINT DETAILS AT INTERIOR BENTS, SEE STANDARD DRAWING 1BWS(M).
FOR SEALED EXPANSION JOINT DETAILS, SEE STANDARD DRAWING SEJ-A (M).
FOR TRAFFIC RAIL DETAILS, SEE STANDARD DRAWING SSTR (M).
FOR THICKENED END SLAB DETAILS AND QUANTITY ADJUSTMENTS, SEE STANDARD DRAWING 1BTS (M).

NO.	DATE	REVISION	APPROV.

Texas Department of Transportation
LOOP 1604

NORTHBOUND BRIDGE
AT HELOTES CREEK
54.000m PRESTRESSED CONCRETE BEAM UNIT

Kimley-Horn and Associates, Inc.

Designed SNA	DIST	FED REG	FEDERAL AID PROJECT #			HIGHWAY
Checked DKK	15	6	CD 2452-01-035			LP1604
Drawn JTK	COUNTY		CONTROL	SECT	JOB	SHEET
Checked SNA	BEXAR		2452	01	035	164

1 OF 5

LEVELS DISPLAYED

1	2	3	4	5	6	7	8	9	10	11	12	13	14	15	16	17	18	19	20	21	22	23	24	25	26	27	28	29	30	31	32
33	34	35	36	37	38	39	40	41	42	43	44	45	46	47	48	49	50	51	52	53	54	55	56	57	58	59	60	61	62	63	

FILENAME: p:\67316-03\he1pb01.dgn PLOTTED: 01 MAY 97 19:19:40

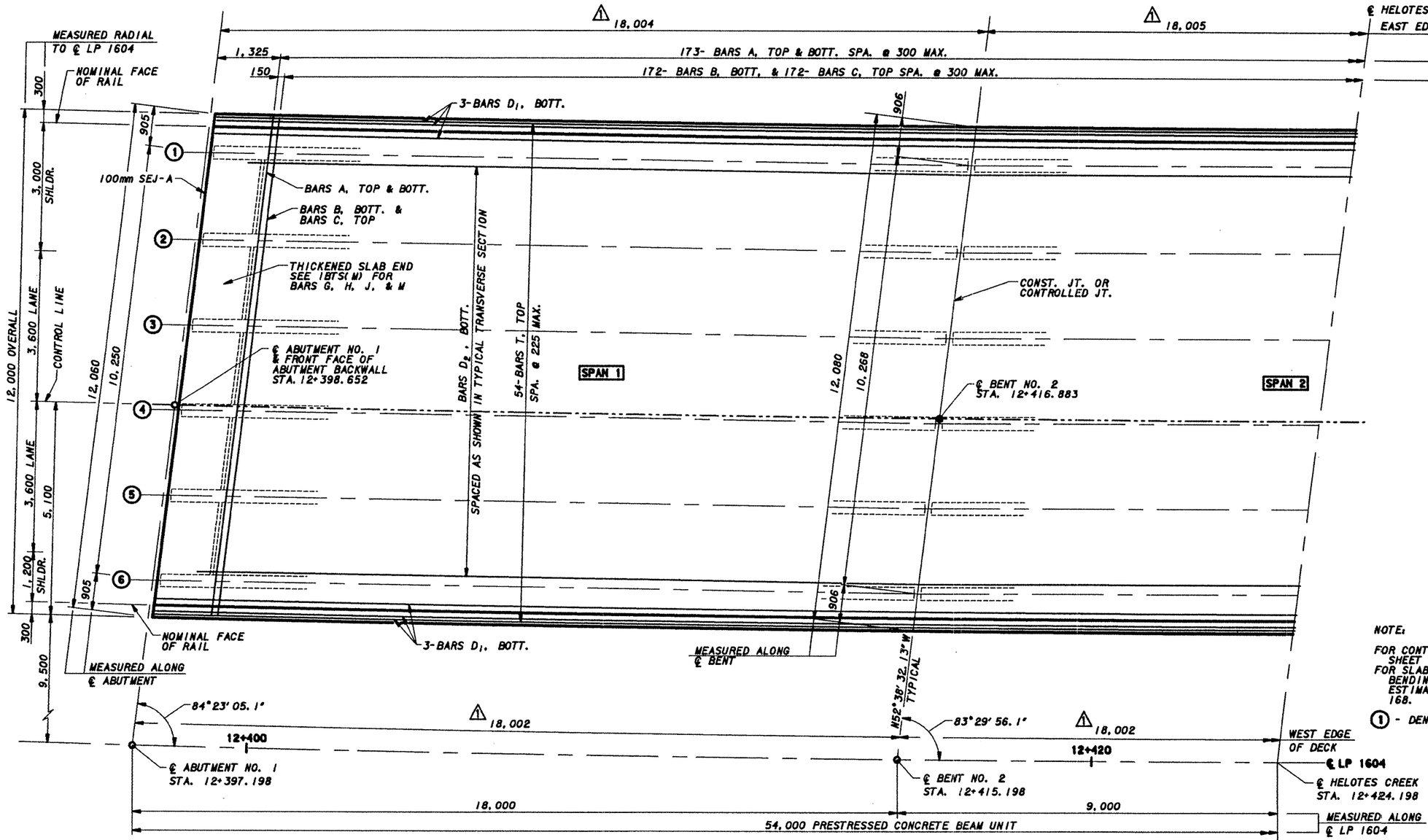

PLAN

NOTE:

FOR CONTINUATION OF SLAB PLAN, SEE SHEET 165
FOR SLAB SECTIONS AND DETAILS, BAR BENDING DIAGRAMS, AND TABLE OF ESTIMATED QUANTITIES, SEE SHEET 168.

(1) - DENOTES THE BEAM NUMBER

GENERAL NOTES:

DESIGNED ACCORDING TO AASHTO "STANDARD SPECIFICATIONS FOR HIGHWAY BRIDGES", 1996, FOR A MS-18 LOADING.
ALL DIMENSIONS ARE IN MILLIMETERS, UNLESS OTHERWISE NOTED.
HORIZONTAL DIMENSIONS ARE SHOWN AND MUST BE CORRECTED FOR GRADE AND CROSS SLOPE, WHERE APPROPRIATE.
ALL CAST-IN-PLACE CONCRETE SHALL BE CLASS S. DESIGN f'c = 28 MPa.
REINFORCING STEEL SHALL BE ASTM A-615, GRADE 420.
CHAMFER ALL EXPOSED CONCRETE EDGES 20mm, UNLESS OTHERWISE SHOWN.

FOR CONTINUOUS PLACEMENT, THE MINIMUM RATE OF CONCRETE PLACING AND FINISHING SHALL BE NOT LESS THAN 9 LINEAL METERS PER HOUR.
FOR END DIAFRAM OPTIONS, SEE STANDARD DRAWING IBDO(M).
FOR CONTROL JOINT DETAILS AT INTERIOR BENTS, SEE STANDARD DRAWING IBWS(M).
FOR SEALED EXPANSION JOINT DETAILS, SEE STANDARD DRAWING SEJ-A (M).
FOR TRAFFIC RAIL DETAILS, SEE STANDARD DRAWING SSTR (M).
FOR THICKENED END SLAB DETAILS AND QUANTITY ADJUSTMENTS, SEE STANDARD DRAWING IBTS (M).

STATE OF TEXAS
S. N. AFTAB
80137
REGISTERED PROFESSIONAL ENGINEER
S. Nawed Aftab
1/5/98

NO.	DATE	REVISION	APPROV.
1	1/5/98	Revised Edge of Deck Lengths	SNA

Texas Department of Transportation
LOOP 1604

NORTHBOUND BRIDGE
AT HELOTES CREEK
54.000m PRESTRESSED
CONCRETE BEAM UNIT

Kimley-Horn and Associates, Inc.

Designed SNA	DIST	FED RDS	FEDERAL AID PROJECT #					HIGHWAY
Checked DKK	15	6	CD 2452-01-035					LP1604
Drawn JTK	COUNTY			CONTROL	SECT	JOB		SHEET
Checked SNA	BEXAR			2452	01	035		164

Change Order No. 3

1 OF 5

A

FILENAME: pw\67316-03\rw\pb01.dgn PLOTTED: 05 JAN 98 15:23:06

LEVELS DISPLAYED

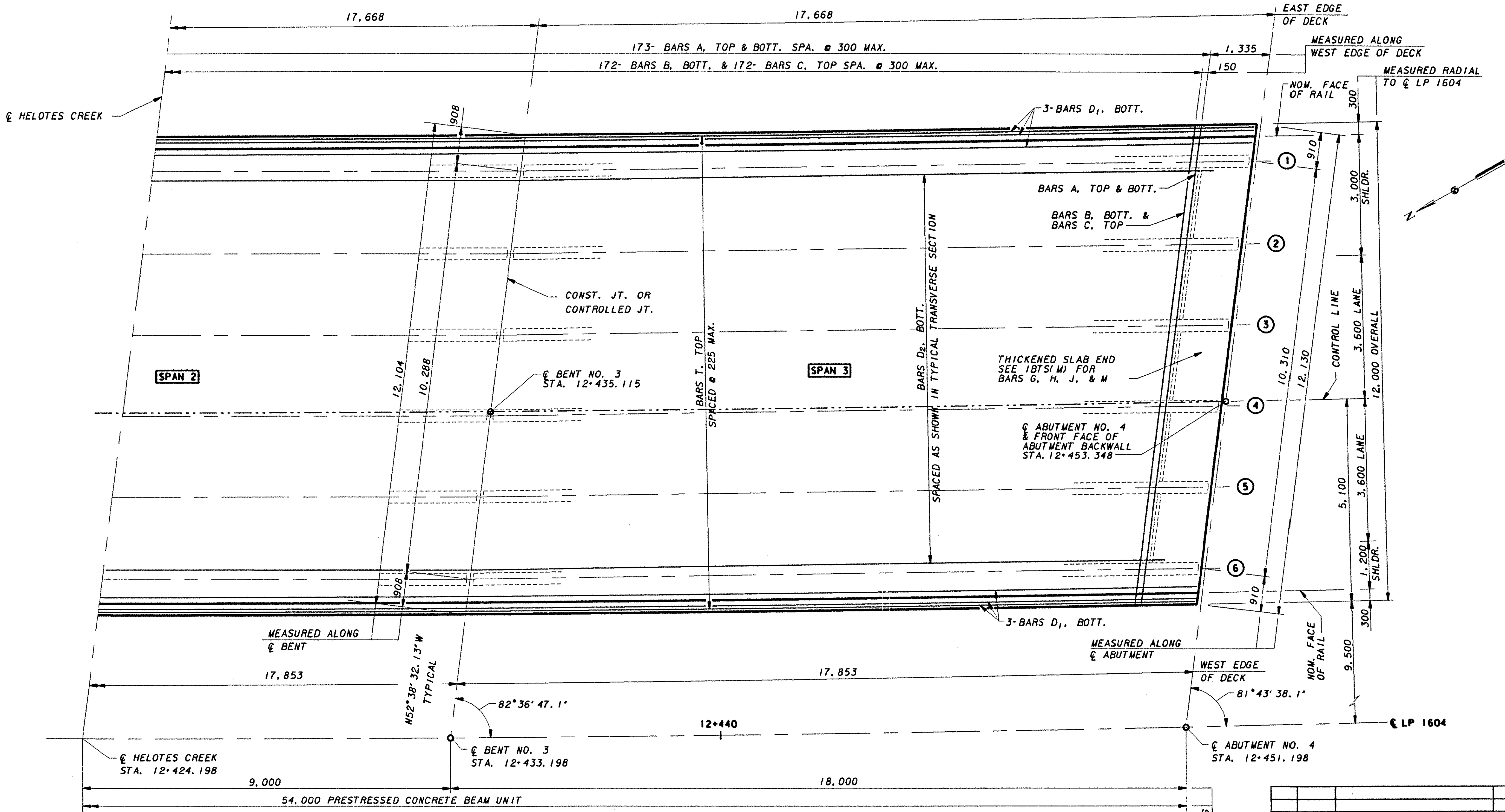

PLAN

STATE OF TEXAS
S. N. AFTAB
80137
REGISTERED PROFESSIONAL ENGINEER

S. Naveed Aftab
5/2/97

NOTE:

FOR CONTINUATION OF SLAB PLAN AND GENERAL NOTES, SEE SHEET 164.
FOR SLAB SECTIONS AND DETAILS, BAR BENDING DIAGRAMS, AND TABLE OF ESTIMATED QUANTITIES, SEE SHEET 168.

(1) - DENOTES THE BEAM NUMBER

NO.	DATE	REVISION	APPROV.

Texas Department of Transportation
LOOP 1604

NORTHBOUND BRIDGE
AT HELOTES CREEK
54.000m PRESTRESSED
CONCRETE BEAM UNIT

Kimley-Horn and Associates, Inc.

Designed SNA	DIST	FED REG	FEDERAL AID PROJECT #				HIGHWAY
Checked DKK	15	6	CD 2452-01-035				LP1604
Drawn JTK	COUNTY		CONTROL	SECT	JOB		SHEET
Checked SNA	BEXAR		2452	01	035		165

FILENAME: p:\67316-03\helpb02.dgn PLOTTED: 01 MAY 97 19:53:33

LEVELS DISPLAYED

1		3	4	5	6	7	8	9	10	11	12	13	14	15	16
17	18	19	20	21	22	23	24	25	26	27	28	29	30	31	32
33	34	35	36	37	38	39	40	41	42	43	44	45	46	47	48
49	50	51	52	53	54	55	56	57	58	59	60	61	62	63	

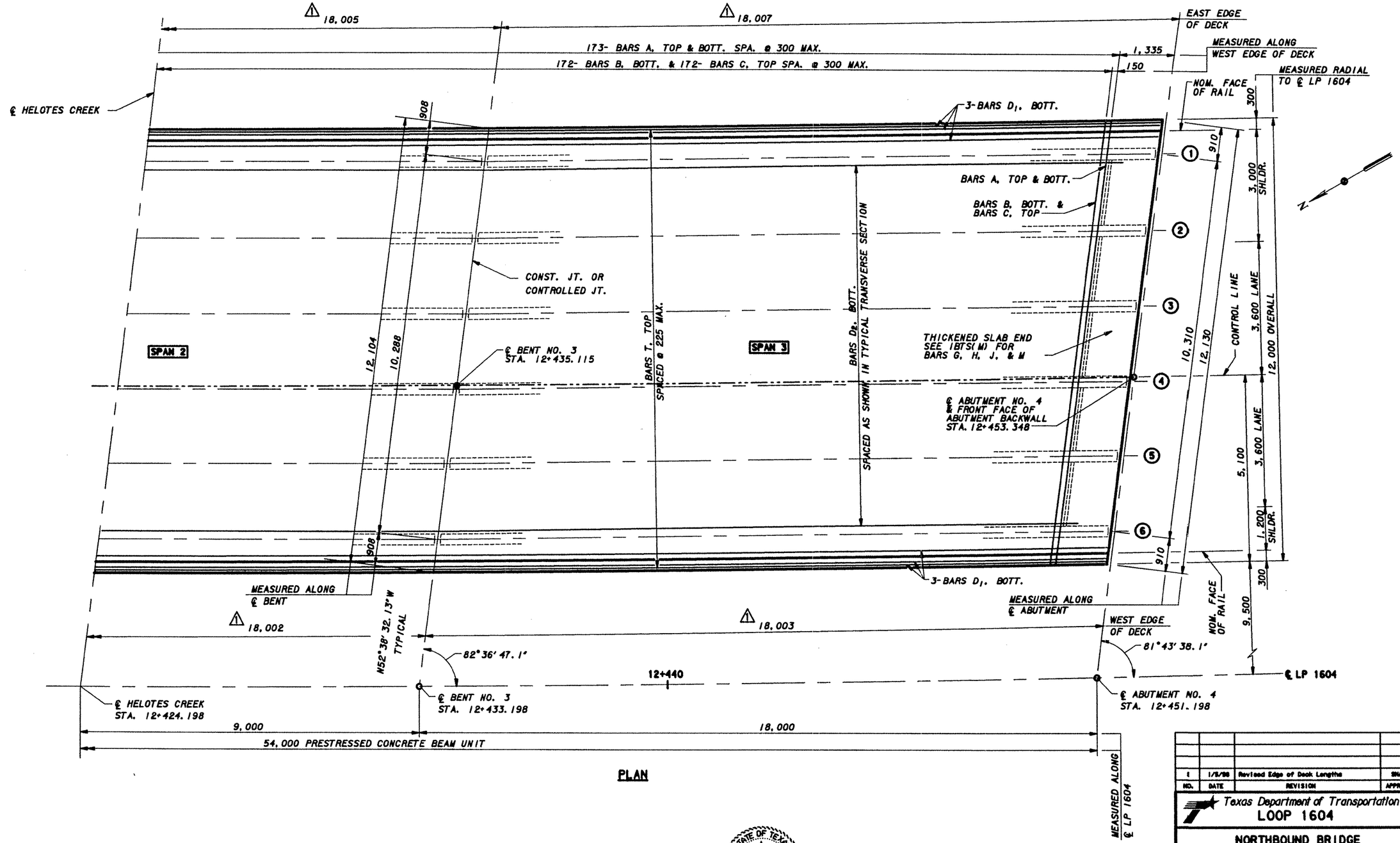

PLAN

NOTE:

FOR CONTINUATION OF SLAB PLAN AND GENERAL NOTES, SEE SHEET 164.
FOR SLAB SECTIONS AND DETAILS, BAR BENDING DIAGRAMS, AND TABLE OF ESTIMATED QUANTITIES, SEE SHEET 168.

(1) - DENOTES THE BEAM NUMBER

STATE OF TEXAS
S. N. AFTAB
80137
REGISTERED PROFESSIONAL ENGINEER

S. Naval Aftab
1/5/98

NO.	DATE	REVISION	APPROV.
1	1/5/98	Revised Edge of Deck Lengths	SNA

Texas Department of Transportation
LOOP 1604

NORTHBOUND BRIDGE
AT HELOTES CREEK
54.000m PRESTRESSED
CONCRETE BEAM UNIT

Kimley-Horn and Associates, Inc.

Designed SNA	DIST	FED RD	FEDERAL AID PROJECT #				HIGHWAY
Checked DKK	15	6	CD 2452-01-035				LP1604
Drawn JTK	COUNTY		CONTROL	SECT	JOB	SHEET	
Checked SNA	BEXAR		2452	01	035	165	

Change Order No. 3 2 OF 5

A

FILENAME: g:\67316-03\helpb02.dgn PLOTTED: 05 JAN 98 15:18:35

LEVELS DISPLAYED

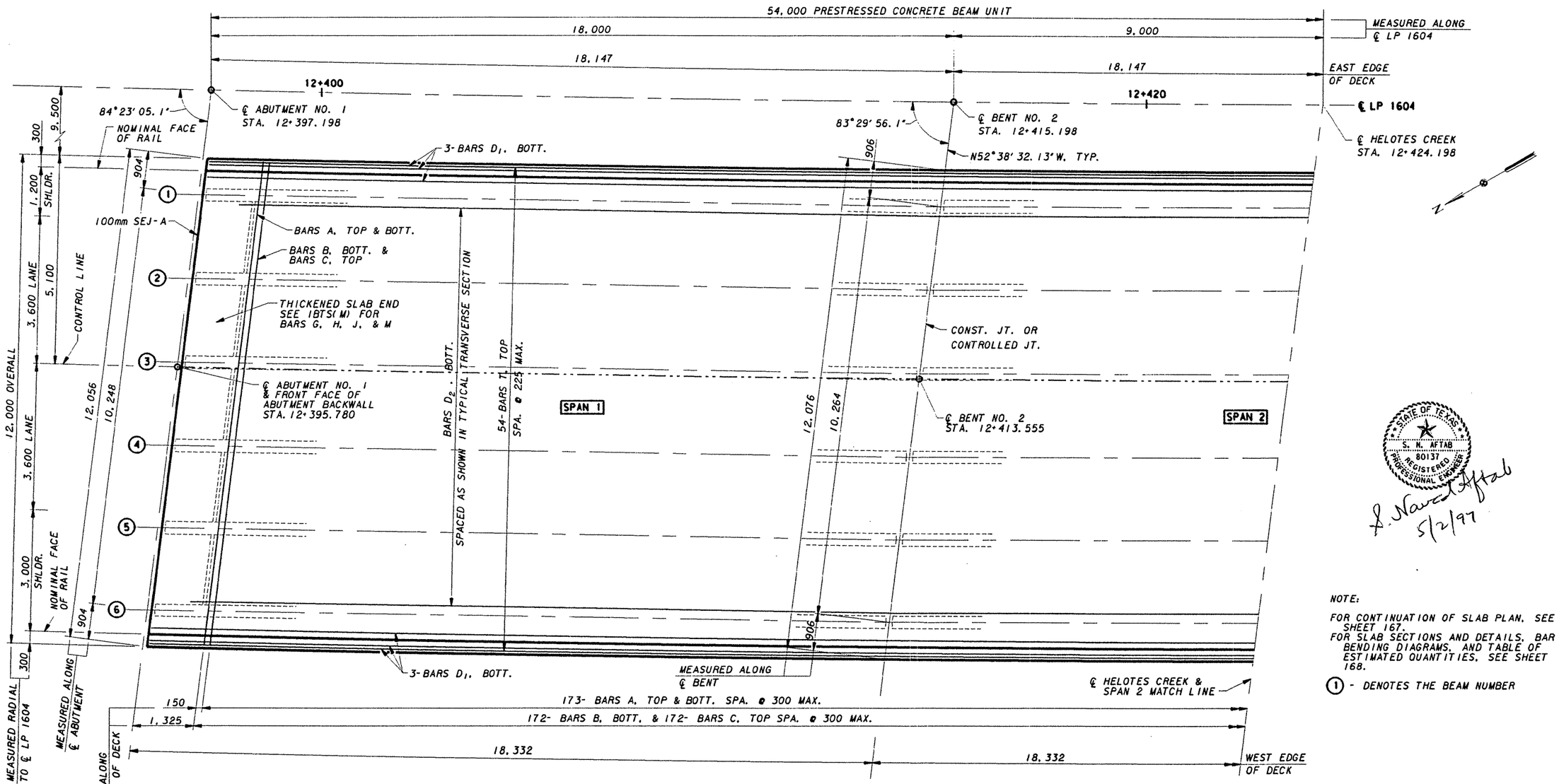

PLAN

NOTE:

FOR CONTINUATION OF SLAB PLAN, SEE SHEET 167.
FOR SLAB SECTIONS AND DETAILS, BAR BENDING DIAGRAMS, AND TABLE OF ESTIMATED QUANTITIES, SEE SHEET 168.

(1) - DENOTES THE BEAM NUMBER

GENERAL NOTES:

DESIGNED ACCORDING TO AASHTO 'STANDARD SPECIFICATIONS FOR HIGHWAY BRIDGES', 1996, FOR A MS-18 LOADING.
ALL DIMENSIONS ARE IN MILLIMETERS, UNLESS OTHERWISE NOTED.
HORIZONTAL DIMENSIONS ARE SHOWN AND MUST BE CORRECTED FOR GRADE AND CROSS SLOPE, WHERE APPROPRIATE.
ALL CAST-IN-PLACE CONCRETE SHALL BE CLASS S. DESIGN f'c = 28 MPa.
REINFORCING STEEL SHALL BE ASTM A-615, GRADE 420.
CHAMFER ALL EXPOSED CONCRETE EDGES 20mm, UNLESS OTHERWISE SHOWN.

FOR CONTINUOUS PLACEMENT, THE MINIMUM RATE OF CONCRETE PLACING AND FINISHING SHALL BE NOT LESS THAN 9 LINEAL METERS PER HOUR.
FOR END DIAFRAM OPTIONS, SEE STANDARD DRAWING IBDO (M).
FOR CONTROL JOINT DETAILS, AT INTERIOR BENTS, SEE STANDARD DRAWING IBMS (M).
FOR SEALED EXPANSION JOINT DETAILS, SEE STANDARD DRAWING SEJ-A (M).
FOR TRAFFIC RAIL DETAILS, SEE STANDARD DRAWING SSTR (M).
FOR THICKENED END SLAB DETAILS AND QUANTITY ADJUSTMENTS, SEE STANDARD DRAWING IBTS (M).

STATE OF TEXAS
S. N. AFTAB
80137
REGISTERED PROFESSIONAL ENGINEER
S. Naved Aftab
5/2/97

NO.	DATE	REVISION	APPROV.

Texas Department of Transportation
LOOP 1604

SOUTHBOUND BRIDGE
AT HELOTES CREEK
54.000m PRESTRESSED
CONCRETE BEAM UNIT

Kimley-Horn and Associates, Inc.

Designed SNA	DIST	FED REG	FEDERAL AID PROJECT #				HIGHWAY
Checked DKK	15	6	CD 2452-01-035				LP1604
Drawn JTK	COUNTY			CONTROL	SECT	JOB	SHEET
Checked SNA	BEXAR			2452	01	035	166

3 OF 5

FILENAME: p:\67316-03\helpb03.dgn PLOTTED: 01 MAY 97 19:27:37

LEVELS DISPLAYED
1 3 4 5 6 7 8 9 10 11 12 13 14 15 16
17 18 19 20 21 22 23 24 25 26 27 28 29 30 31 32
33 34 35 36 37 38 39 40 41 42 43 44 45 46 47 48
49 50 51 52 53 54 55 56 57 58 59 60 61 62 63

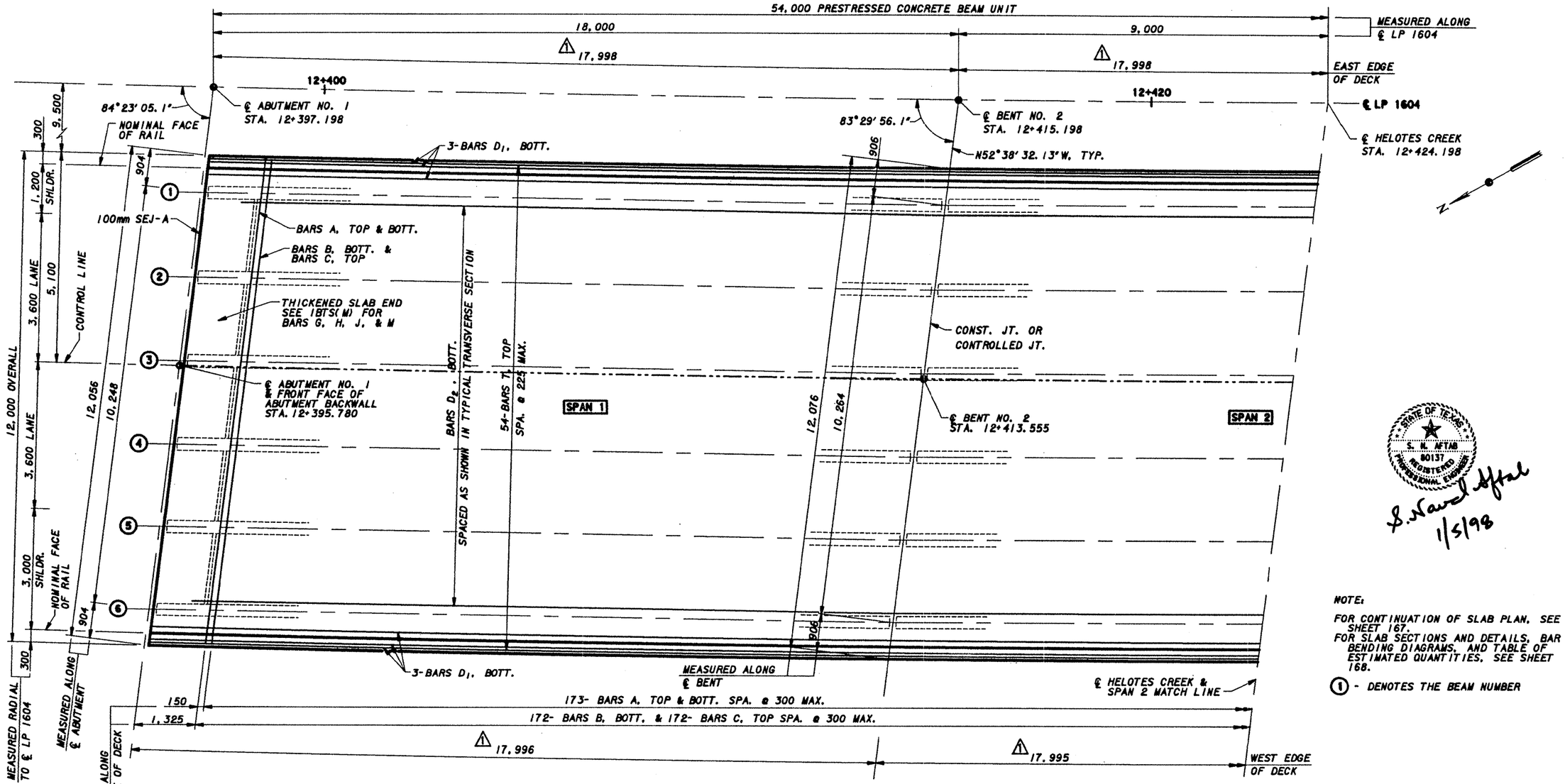

PLAN

NOTE:

FOR CONTINUATION OF SLAB PLAN, SEE SHEET 167.
FOR SLAB SECTIONS AND DETAILS, BAR BENDING DIAGRAMS, AND TABLE OF ESTIMATED QUANTITIES, SEE SHEET 168.

(1) - DENOTES THE BEAM NUMBER

STATE OF TEXAS
S. N. AFTAB
80137
REGISTERED PROFESSIONAL ENGINEER

S. Naval Aftab
1/5/98

GENERAL NOTES:

DESIGNED ACCORDING TO AASHTO "STANDARD SPECIFICATIONS FOR HIGHWAY BRIDGES", 1996, FOR A MS-18 LOADING.
ALL DIMENSIONS ARE IN MILLIMETERS, UNLESS OTHERWISE NOTED.
HORIZONTAL DIMENSIONS ARE SHOWN AND MUST BE CORRECTED FOR GRADE AND CROSS SLOPE, WHERE APPROPRIATE.
ALL CAST-IN-PLACE CONCRETE SHALL BE CLASS S. DESIGN f'c = 28 MPa.
REINFORCING STEEL SHALL BE ASTM A-615, GRADE 420.
CHAMFER ALL EXPOSED CONCRETE EDGES 20mm, UNLESS OTHERWISE SHOWN.

FOR CONTINUOUS PLACEMENT, THE MINIMUM RATE OF CONCRETE PLACING AND FINISHING SHALL BE NOT LESS THAN 9 LINEAL METERS PER HOUR.
FOR END DIAFRAM OPTIONS, SEE STANDARD DRAWING IBDO (M).
FOR CONTROL JOINT DETAILS, AT INTERIOR BENTS, SEE STANDARD DRAWING IBMS (M).
FOR SEALED EXPANSION JOINT DETAILS, SEE STANDARD DRAWING SEJ-A (M).
FOR TRAFFIC RAIL DETAILS, SEE STANDARD DRAWING SSTR (M).
FOR THICKENED END SLAB DETAILS AND QUANTITY ADJUSTMENTS, SEE STANDARD DRAWING IBTS (M).

NO.	DATE	REVISION	APPROV.
1	1/5/98	Revised Edge of Deck Lengths	SNA

Texas Department of Transportation
LOOP 1604

SOUTHBOUND BRIDGE
AT HELOTES CREEK
54.000m PRESTRESSED
CONCRETE BEAM UNIT

Kimley-Horn and Associates, Inc.

Designed SNA	DIST	FED RED	FEDERAL AID PROJECT #	HIGHWAY
Checked DKK	15	6	CD 2452-01-036	LP1604
Drawn JTK	COUNTY		CONTROL SECT JOB	SHEET
Checked SNA	BEXAR		2452 01 035	166

Change Order

3 OF 5

A

LEVELS DISPLAYED

FILENAME: g:\67316-03\helpb03.dgn PLOTTED: 05 JAN 98 15:23:23

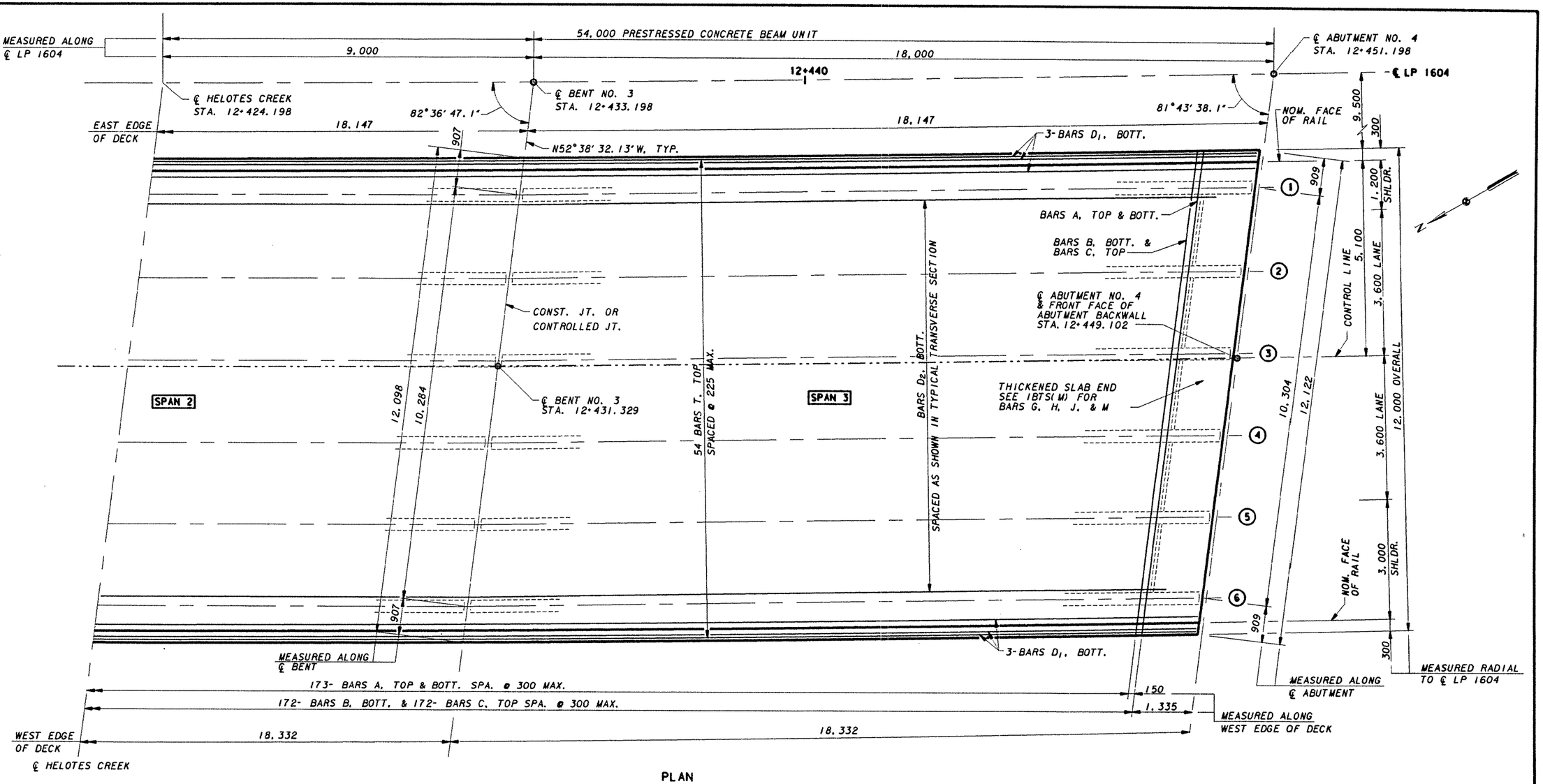

PLAN

NO.	DATE	REVISION	APPROV.

Texas Department of Transportation
LOOP 1604

SOUTHBOUND BRIDGE
AT HELOTES CREEK
54.000m PRESTRESSED
CONCRETE BEAM UNIT

Kimley-Horn and Associates, Inc.

STATE OF TEXAS
S. N. AFTAB
80137
REGISTERED
PROFESSIONAL ENGINEER
S. Naved Aftab
5/2/97

NOTE:

FOR CONTINUATION OF SLAB PLAN AND GENERAL NOTES, SEE SHEET 166.
FOR SLAB SECTIONS AND DETAILS, BAR BENDING DIAGRAMS, AND TABLE OF ESTIMATED QUANTITIES, SEE SHEET 168.

(1) - DENOTES THE BEAM NUMBER

Designed SNA	DIST	FED REG	FEDERAL AID PROJECT #			HIGHWAY
Checked DKK	15	6	CD 2452-01-035			LP1604
Drawn JTK	COUNTY		CONTROL	SECT	JOB	SHEET
Checked SNA	BEXAR		2452	01	035	167

4 OF 5

LEVELS DISPLAYED

1		3	4	5	6	7	8	9	10	11	12	13	14	15	16
17	18	19	20	21	22	23	24	25	26	27	28	29	30	31	32
33	34	35	36	37	38	39	40	41	42	43	44	45	46	47	48
49	50	51	52	53	54	55	56	57	58	59	60	61	62	63	

FILENAME: pr\67316-03\helpb04.dgn PLOTTED: 01 MAY 97 19:31:36

SPAN NO.	BEAM NO.	"A"	"B"
ALL	1 & 6	17	23
ALL	2 - 5	17	24

TABLE OF SECTION DEPTHS			
SPAN NO.	"X" AT ℄ BRG.	"Y" AT ℄ BRG.	"Z" AT ℄ SPAN †
ALL	275	1,140	210

† THEORETICAL DIMENSION

TABLE OF BEAM LENGTHS			
SPAN NO.	BEAM NO.	HORIZ DIST ℄ - ℄ BENT (m)	*BEAM LENGTH (m)
NB 1	ALL	17.774	17.877
NB 2	ALL	17.774	17.905
NB 3	ALL	17.774	17.879
SB 1	ALL	18.226	17.872
SB 2	ALL	18.226	17.898
SB 3	ALL	18.226	17.870

TABLE OF ESTIMATED QUANTITIES					
SPAN NO.	REINF. CONC. SLAB	*PRESTRESSED CONC. BEAMS	CLASS "S" CONCRETE		REINFORCING STEEL
		TYPE B	DIAPHRAGM	SLAB	
	m^2	m	m^3	m^3	kg
NB	648.13	321.966		129.6	20,740
SB	647.87	321.840		129.6	20,732
TOTAL	1,296.00	643.806		259.2	41,472 ◆

◆ - REINFORCING STEEL MASS IS CALCULATED USING AN APPROXIMATE FACTOR OF $32 kg/m^2$.

* - BEAM LENGTHS ARE BOTTOM FLANGE LENGTHS CORRECTED FOR GRADE & CROSS-SLOPE.

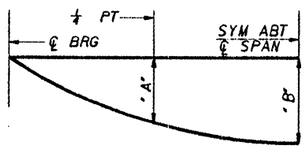

NOTE: DEFLECTIONS SHOWN ARE DUE TO CAST-IN-PLACE CONCRETE ONLY. (E_c = 35,000 MPa)

DEAD LOAD DEFLECTION DIAGRAM

TABLE OF REINFORCING BARS	
BAR	SIZE
A	#5
B	#5
C	#5
D	#5
D	#5
G	#5
H	#5
J	#5
K	#5
M	#5
T	#4

NOTES:

ALL DIMENSIONS ARE IN MILLIMETERS, UNLESS OTHERWISE SHOWN.
REINFORCING STEEL LAP SPLICES, WHERE REQUIRED, SHALL BE AS FOLLOWS:
#4 = 440mm
#5 = 560mm
HORIZONTAL DISTANCE FROM ℄ - ℄ BENTS ARE MEASURED ALONG THE CONTROL LINES FOR EACH BRIDGE.
FOR GENERAL NOTES, SEE SHEETS 164 & 166.
FOR NORTHBOUND BRIDGE SLAB PLAN, SEE SHEETS 164-165.
FOR SOUTHBOUND BRIDGE SLAB PLAN, SEE SHEETS 166-167.

◯ - DENOTES THE BEAM NUMBER

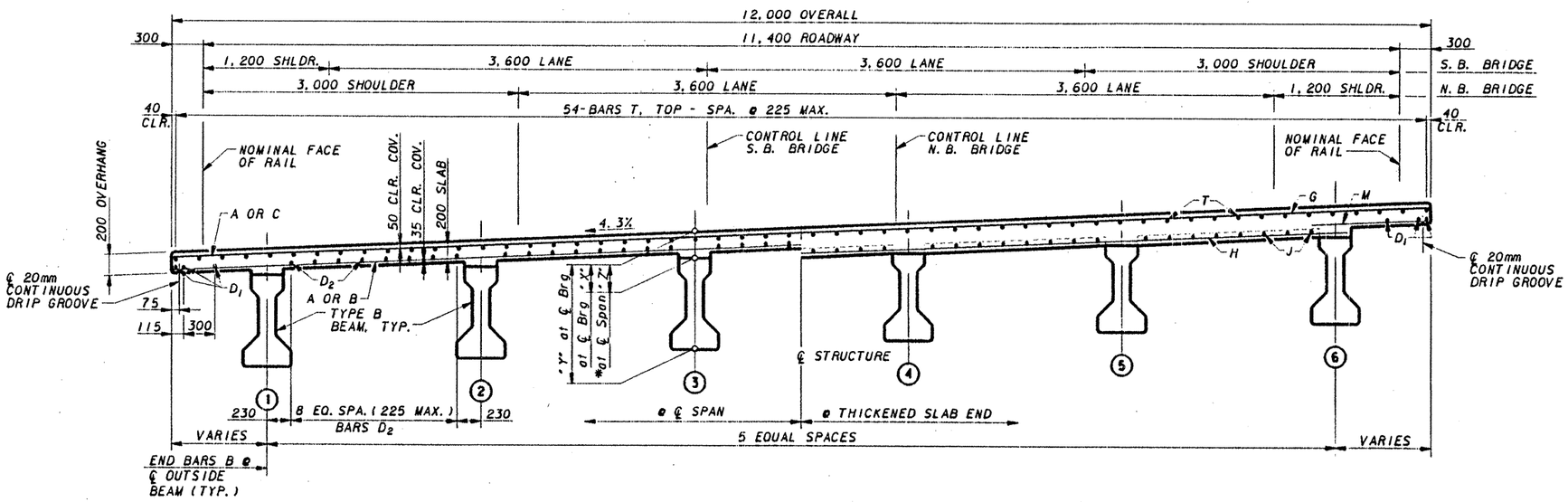

TYPICAL TRANSVERSE SECTION

STATE OF TEXAS
S. N. AFTAB
80137
REGISTERED PROFESSIONAL ENGINEER
S. Nawab Aftab
5/2/97

NO.	DATE	REVISION	APPROV.

Texas Department of Transportation
LOOP 1604

54.000m PRESTRESSED CONCRETE BEAM UNIT DETAILS

Kimley-Horn and Associates, Inc.

Designed SMA	DIST	FED REG	FEDERAL AID PROJECT #					HIGHWAY
Checked DKK	15	6	CD 2452-01-035					LP1604
Drawn JTK	COUNTY			CONTROL	SECT	JOB		SHEET
Checked SMA	BEXAR			2452	01	035		168

5 OF 5

FILENAME: pt\67316-03\hel1p005.dgn PLOTTED: 01 MAY 97 19:32:40

LEVELS DISPLAYED

SPAN NO.	BEAM NO.	"A"	"B"
ALL	1 & 6	17	23
ALL	2 - 5	17	24

TABLE OF SECTION DEPTHS			
SPAN NO.	"X" AT ℄ BRG.	"Y" AT ℄ BRG.	"Z" AT ℄ SPAN †
ALL	275	1,140	210

† THEORETICAL DIMENSION

TABLE OF BEAM LENGTHS		
SPAN NO.	BEAM NO.	*BEAM LENGTH (m)
NB 1	ALL	17.902
NB 2	ALL	17.905
NB 3	ALL	17.904
SB 1	ALL	17.897
SB 2	ALL	17.898
SB 3	ALL	17.895

△1

TABLE OF ESTIMATED QUANTITIES					
SPAN NO.	REINF. CONC. SLAB	*PRESTRESSED CONC. BEAMS	CLASS "S" CONCRETE		REINFORCING STEEL
		TYPE B	DIAPHRAGM	SLAB	
	m^2	m	m^3	m^3	kg
NB	648.13	321.966		129.6	20,740
SB	647.87	321.840		129.6	20,732
TOTAL	1,296.00	643.806		259.2	41,472 ◆

◆ - REINFORCING STEEL MASS IS CALCULATED USING AN APPROXIMATE FACTOR OF 32kg/m².

* - BEAM LENGTHS ARE BOTTOM FLANGE LENGTHS CORRECTED FOR GRADE & CROSS-SLOPE.

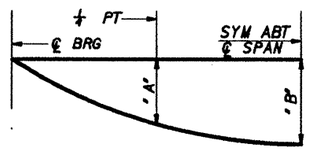

NOTE: DEFLECTIONS SHOWN ARE DUE TO CAST-IN-PLACE CONCRETE ONLY. (E_c = 35,000 MPa)

DEAD LOAD DEFLECTION DIAGRAM

TABLE OF REINFORCING BARS	
BAR	SIZE
A	#5
B	#5
C	#5
D	#5
D	#5
G	#5
H	#5
J	#5
K	#5
M	#5
T	#4

NOTES:

ALL DIMENSIONS ARE IN MILLIMETERS, UNLESS OTHERWISE SHOWN.
REINFORCING STEEL LAP SPLICES, WHERE REQUIRED, SHALL BE AS FOLLOWS:
#4 = 440mm
#5 = 560mm
HORIZONTAL DISTANCE FROM ℄ - ℄ BENTS ARE MEASURED ALONG THE CONTROL LINES FOR EACH BRIDGE.
FOR GENERAL NOTES, SEE SHEETS 164 & 166.
FOR NORTHBOUND BRIDGE SLAB PLAN, SEE SHEETS 164-165.
FOR SOUTHBOUND BRIDGE SLAB PLAN, SEE SHEETS 166-167.

◯ - DENOTES THE BEAM NUMBER

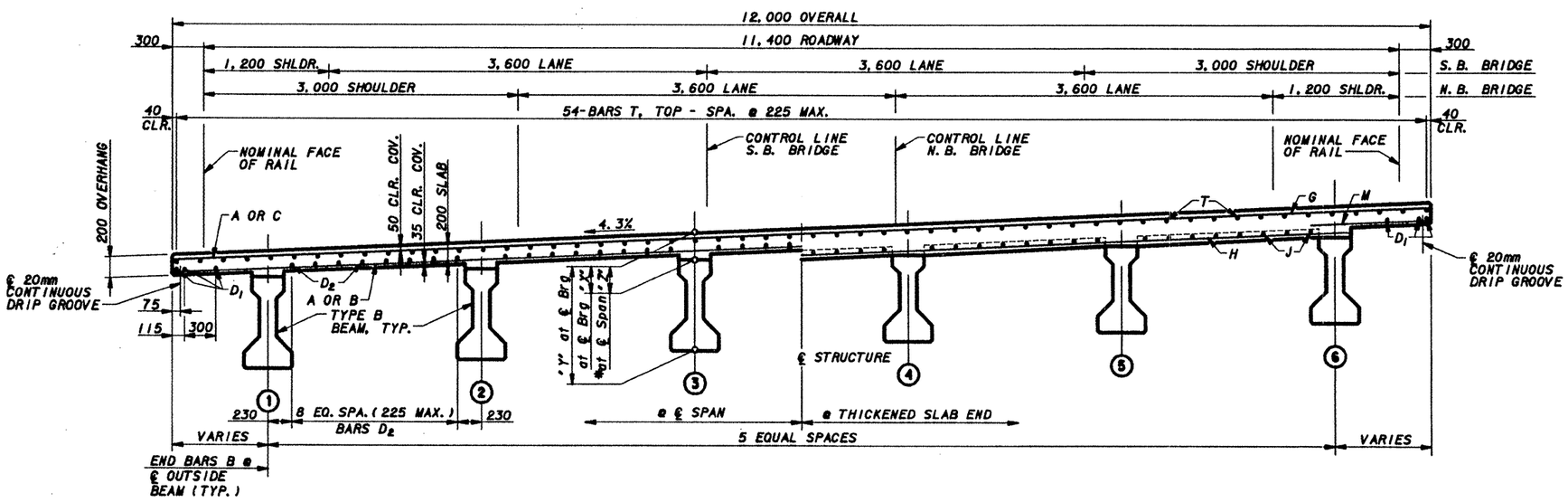

TYPICAL TRANSVERSE SECTION

S. Nawed Aftab
1/5/98

NO.	DATE	REVISION	APPROV.
1	1/5/98	Revised Table of Beam Lengths	SNA

Texas Department of Transportation
LOOP 1604

54.000m PRESTRESSED CONCRETE BEAM UNIT DETAILS

Kimley-Horn and Associates, Inc.

Designed SNA	DIST	FED RDS	FEDERAL AID PROJECT #	HIGHWAY
Checked DKK	15	6	CD 2452-01-035	LP1604
Drawn JTK	COUNTY		CONTROL / SECT / JOB	SHEET
Checked SNA	BEXAR		2452 / 01 / 035	166

Change Order No. 3

5 OF 5

FILENAME: g:\67316-03\rwlpb05.dgn PLOTTED: 05 JAN 98 15:23:57

LEVELS DISPLAYED
1 2 3 4 5 6 7 8 9 10 11 12 13 14 15 16
17 18 19 20 21 22 23 24 25 26 27 28 29 30 31 32
33 34 35 36 37 38 39 40 41 42 43 44 45 46 47 48
49 50 51 52 53 54 55 56 57 58 59 60 61 62 63

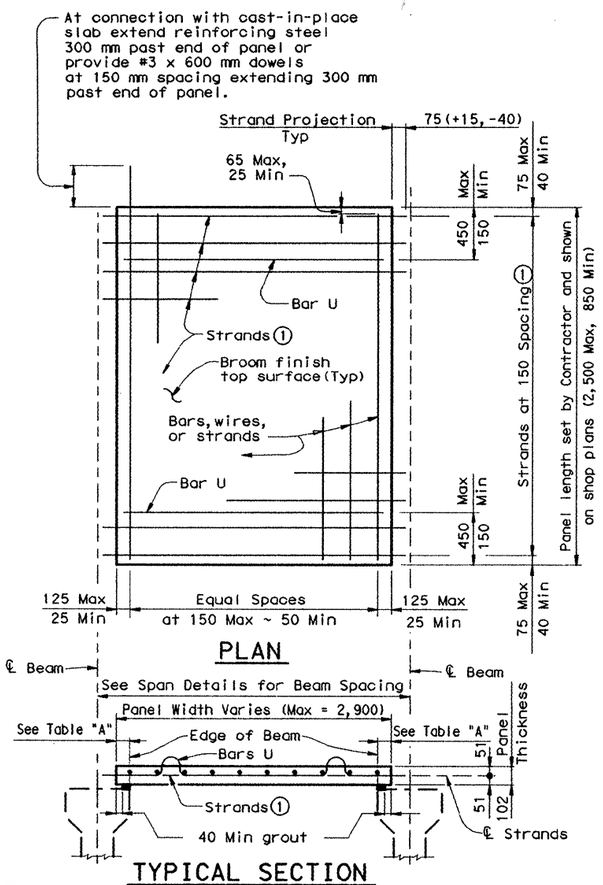

PLAN

TYPICAL SECTION

① Reinforcing steel #4 (Gr 420) at 150 mm spacing may be substituted for strands in panels 1,500 mm in width or less and shall be required in panels 1,050 mm in width or less. Spacing may be increased to 152 mm to accommodate existing forms.

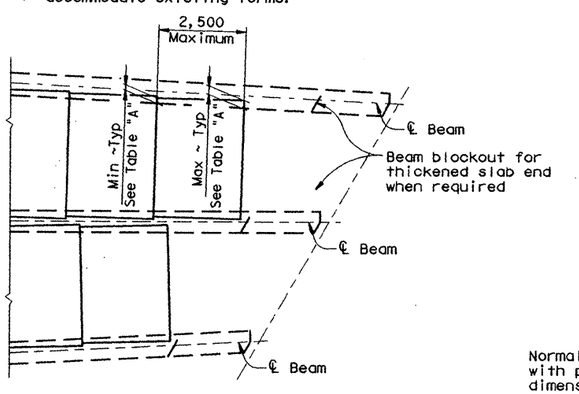

FLARED BEAM SPANS

PART PLAN
(Showing thickened slab end condition)

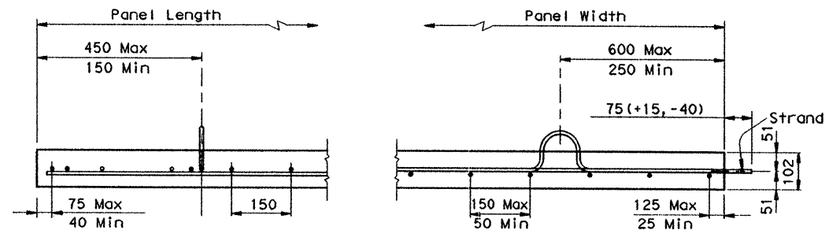

REINFORCING BELOW STRANDS

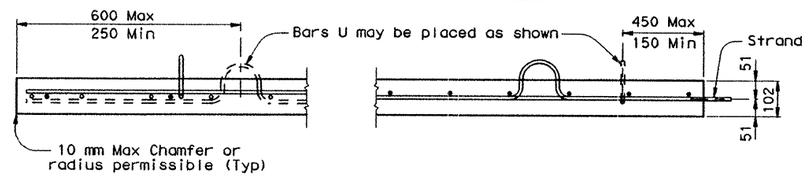

REINFORCING ABOVE STRANDS

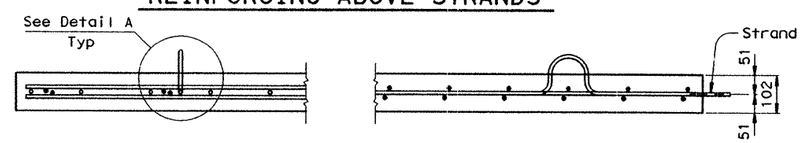

REINFORCING ABOVE & BELOW STRANDS

Reinforcing steel may be deformed reinforcing bars, welded wire fabric or welded deformed bar mats. Minimum area of reinforcing perpendicular to strands shall be 473 mm^2/m. Prestressing strands may also be used, spaced at 150 mm for 13 mm strands and 110 mm for 9 mm strands. Individual bars or wires shall be no larger than #3. Reinforcing parallel to strands shall be as required to ensure proper handling of the fabric or bar mat. A reasonable amount of form oil will be permitted on welded fabric or bar mats.

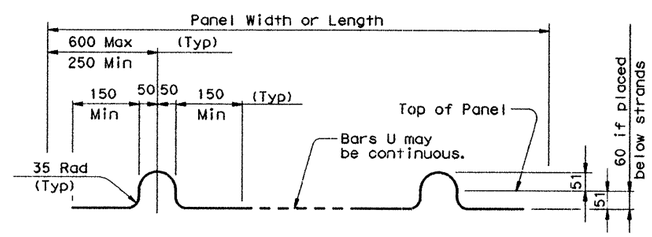

BARS U (#3)

Note: Four loops required per panel.

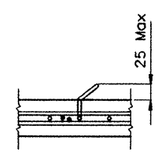

For Panels used with Epoxy Coated slab reinforcing, the loops of Bars U shall be field bent as shown. Bars U may be field bent to clear slab reinforcing.

DETAIL A

TABLE "A"			
Beam Type	Normal (mm)	Min (mm)	Max (mm)
A	75	65	90
B	75	65	90
C	90	65	100
54	100	75	125
IV	140	90	180
72	140	90	200

Normal dimensions shall be used on spans with parallel beams. Maximum and Minimum dimensions shall apply only to spans with flared beams.

PRESTRESSED PANEL DETAILS

GENERAL NOTES:

Designed for MS18 Loading in accordance with AASHTO 1992 Standard and Interim Specifications.

See Span Details for possible restrictions on the use of Prestressed Concrete Panels.

All concrete for panels to be Class H. Release strength f'ci = 28 MPa. Minimum 28 day strength f'c = 35 MPa.

Prestressing strands to be 9 mm - Grade 1860 with an initial tension of 71.62 kN per strand. Larger strands may be used with the same spacing and initial tension.

Suitable holes or anchorage devices for lifting panels may be cast in the panels provided they are shown on the shop plans and approved by the Engineer.

Erected panels shall bear uniformly on bedding strips of fiberboard or expanded polystyrene placed along the outer edge of each beam. A 10 mm gap shall be left at 1,200 mm ± intervals to permit escape of trapped air in the cast-in-place concrete. If additional blocking is needed, special grading details for supporting the panels and extra reinforcing between beam and slab will be required. The cost of this additional blocking will be considered subsidiary to deck construction.

Care must be taken to ensure proper cleaning of construction debris and consolidation of concrete mortar under the edges of the panels. It is also important that the bedding strips be placed at the edges of beams so that adequate space is provided for the mortar to flow a minimum of 40 mm under the panels as the slab concrete is placed. Roadway cross-slope reduces the opening required for proper entry of the mortar. Bedding strips varying in thickness across the beam are therefore required. To allow the proper amount of mortar to flow under the panel, the minimum opening shall be 10 mm.

All reinforcing steel in the cast-in-place slab shall be Grade 420. See Table on Sheet 2 of 3 for size and spacing of reinforcement. Orientation of reinforcement (normal or skewed) shall match that shown on the Span Details.

If the top and/or bottom layer of reinforcing steel is shown on the Span Details to be epoxy coated, then the OT, OC, OA, & OM and/or OD, OB, & OE bars shall be epoxy coated.

Bar laps, where required, shall be as follows:

Uncoated ~ #4 = 440 mm
~ #5 = 560 mm
Epoxy Coated ~ #4 = 660 mm
~ #5 = 820 mm

Contractor Note: Details as shown on the PCP Standard sheet are to be used in conjunction with the Span Details and applicable Standard sheets.

All dimensions are in millimeters unless otherwise shown.

CHANGE ORDER # 3

Texas Department of Transportation
Design Division (Bridge)

PRESTRESSED CONCRETE PANELS

OPTIONAL DECK DETAILS FOR PRESTRESSED CONC BEAM SPANS

PCP (C) (M)

FILE: pcpstd01.dgn	DN: DOT	CK: DWM	DW: RNP	CK: DWM	STD: B489M
© TxDOT January 1996	DIST	FED REG	FEDERAL AID PROJECT •		SHEET
REVISIONS	SAT	6	CD 2452-1-35		1688
	COUNTY		CONTROL	SECT	JOB	HIGHWAY
	BEXAR		2452	01	035	LP1604

DISCLAIMER:
The use of this standard is governed by the "Texas Engineering Practice Act". No warranty of any kind is made by TxDOT for any purpose whatsoever. TxDOT assumes no responsibility for the conversion of this standard to other formats or for incorrect results or damages resulting from its use.

ACC: (LV=1,2 for English; 1,3 for Metric)
LEVELS DISPLAYED: 1 3

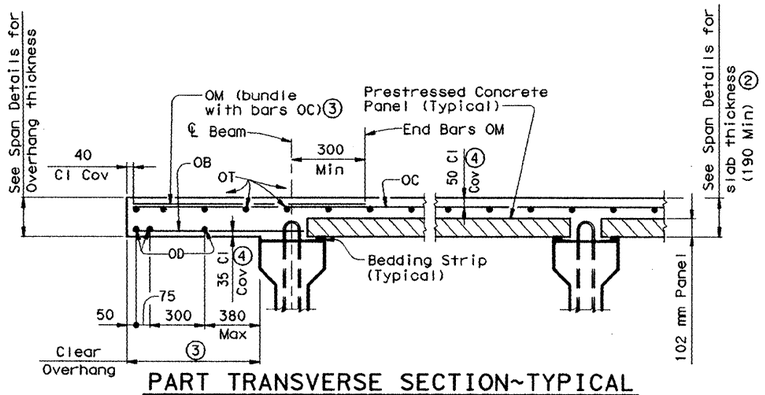

PART TRANSVERSE SECTION~TYPICAL

② The actual thickness constructed may exceed the slab thickness shown on Span Details but, at mid-span of beams the extra thickness shall be no more than 50 mm. Bearing Seat Elevations or finished grade may be adjusted.

③ Bars OM required when slab clear overhang exceeds the following:
190 mm slab ~ 1,030 mm, 195 mm slab ~ 1,060 mm
200 mm slab ~ 1,100 mm

④ Clear cover shall be as indicated unless otherwise shown on Span Details. Bars OT may rest on top of prestressed concrete panels if necessary to maintain clear cover.

TABLE OF REINFORCING STEEL		
BAR	SIZE	MAX SPA (mm)
OA	#5	~
OB	#4	450
OC	#5	150
OD	#5	225
OE	#5	150
OM	#4	~
OT	#4	225

Max Spa as listed unless otherwise shown.

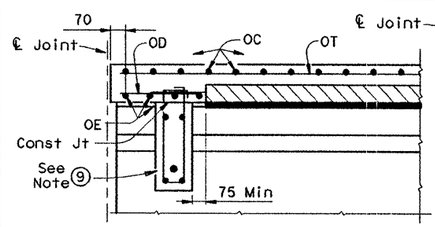

SECTION AT END DIAFRAM

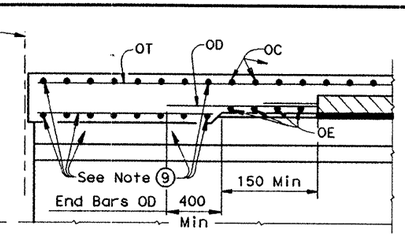

SECTION AT THICKENED SLAB ENDS

⑨ For size and spacing of reinforcing steel, see appropriate details elsewhere in plans.

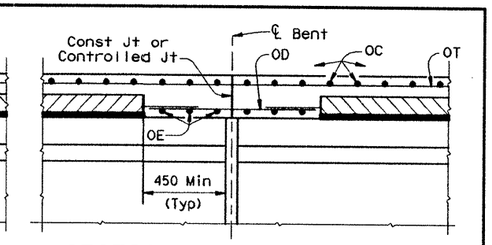

SECTION AT CONVENTIONAL INTERIOR BENT w/o DIAFRAM

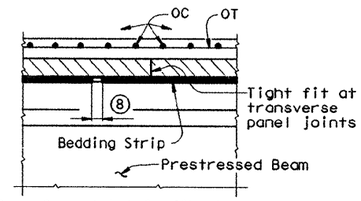

⑧ 10 mm Open Joint in fiberboard at 1,200 mm c/c ±. Place 150 mm long piece of fiberboard behind opening if necessary to reduce grout leakage.

SECTION AT TRANSVERSE PANEL JOINTS

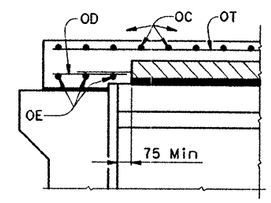

SECTION AT ABUTMENT WITH SLAB OVER BACKWALL

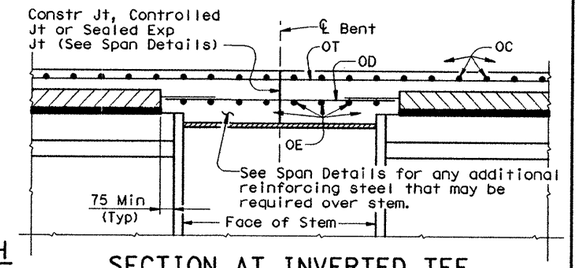

SECTION AT INVERTED TEE INTERIOR BENT

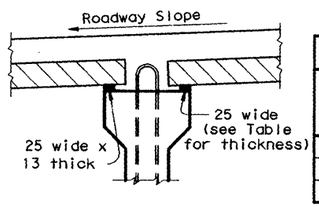

BEDDING STRIP THICKNESS (mm)				
	MAXIMUM ROADWAY SLOPE			
BEAM	80 mm/m	60 mm/m	40 mm/m	20 mm/m
A, B, C	25	19	19	19
54	25	25	19	19
IV, 72	32	25	25	19

NORMAL GRADING DETAIL

Minimum bedding strip dimensions shall be as shown above. To reduce the quantity of cast-in-place concrete, thickness shown may may be increased by 6 mm increments to a maximum of 40 mm. Strips may be comprised of one layer or two, except that no layer shall be less than 13 mm thick. All layers of bedding strips shall be bonded to the beam and to each other with an approved adhesive. The same thickness strip shall be used under any one panel edge and the maximum change in thickness between adjacent panels shall be 6 mm. Panels may be supported by an alternate method, using a commercial product, if approved by the Engineer of Bridge Design, Design Division.

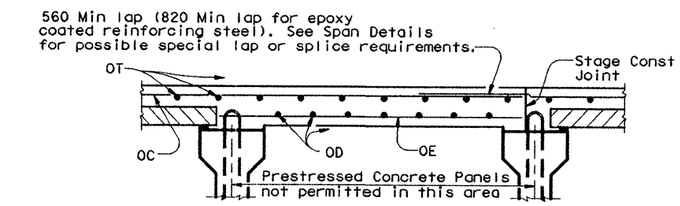

STAGE CONSTRUCTION

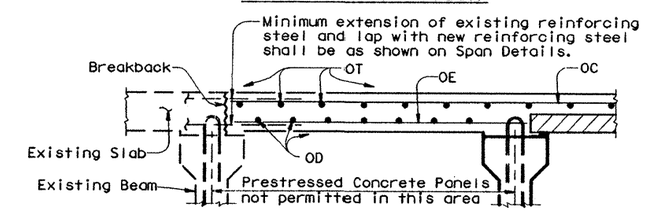

BRIDGE WIDENINGS

PART TRANSVERSE SECTIONS

Examples of potential situations where prestressed concrete panels may not be permitted. Refer to Span Details for limitations on their use.

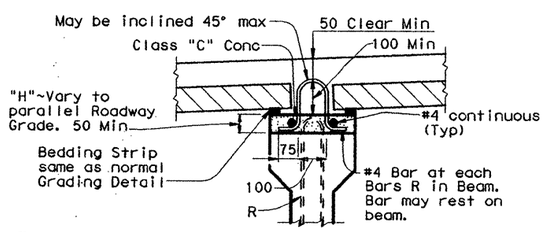

⑤ Concrete blocks used for special grading shall be any convenient plan dimension with a minimum of 50 x 100 mm and a maximum of 100 x 200 mm. Heights may be from 30 mm to 140 mm.

⑥ Concrete blocks from 30 mm high to 50 mm high may be used without the additional R bar extensions or longitudinal #4 bars.

⑦ For blocks up to 90 mm high, Use 1.61 x 25 x 150 galvanized sheet metal angle and for blocks 90 to 140 mm high, use 1.61 x 25 x 200 galvanized sheet metal angle. Tie sheet metal thru holes in angle at 300 mm centers with 2.0 mm minimum Dia galvanized wire. Sheet metal angles are to be overlapped at splices and left in place. Vent holes 10 mm in diameter are to be placed in angles within the upper 25 mm, spaced at 900 mm centers.

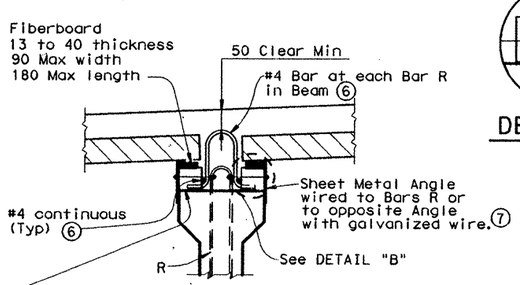

SPECIAL GRADING DETAILS

For use where the distance between top of beam and finished grade can not be achieved within tolerances on cast-in-place slab thickness and thickness of bedding strips. Panels may be supported by an alternate method, using a commercial product, if approved by the Engineer of Bridge Design, Design Division.

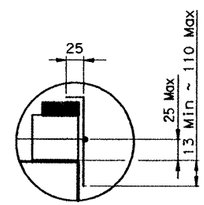

DETAIL "B"

CHANGE ORDER # 3

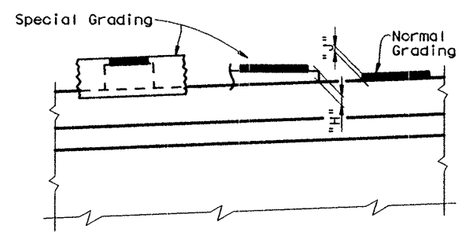

At grading method changes along the beam, the special grading "H" dimension may be reduced to 45 mm and the normal grading "J" dimension may be increased to 50 mm. Some cross-slope conditions may require further H and J adjustments as directed by the Engineer.

SHEET 2 OF 3

Texas Department of Transportation
Design Division (Bridge)

PRESTRESSED CONCRETE PANELS

OPTIONAL DECK DETAILS FOR PRESTRESSED CONC BEAM SPANS

PCP (C) (M)

FILE: pcpstd01.dgn	DN: DOT	CK: DWM	DW: RNP	CK: DWM	STD: B489M
©TxDOT January 1996	DIST	FED REG	FEDERAL AID PROJECT •		SHEET
REVISIONS	SAT	6	CD 2452-1-35		16BC
	COUNTY		CONTROL	SECT	JOB	HIGHWAY
	BEXAR		2452	01	035	LP1604

DISCLAIMER:
The use of this standard is governed by the "Texas Engineering Practice Act". No warranty of any kind is made by TxDOT for any purpose whatsoever. TxDOT assumes no responsibility for the conversion of this standard to other formats or for incorrect results or damages resulting from its use.

ACC:
(LV=1,2 for English; 1,3 for Metric)
LEVELS DISPLAYED
1 3

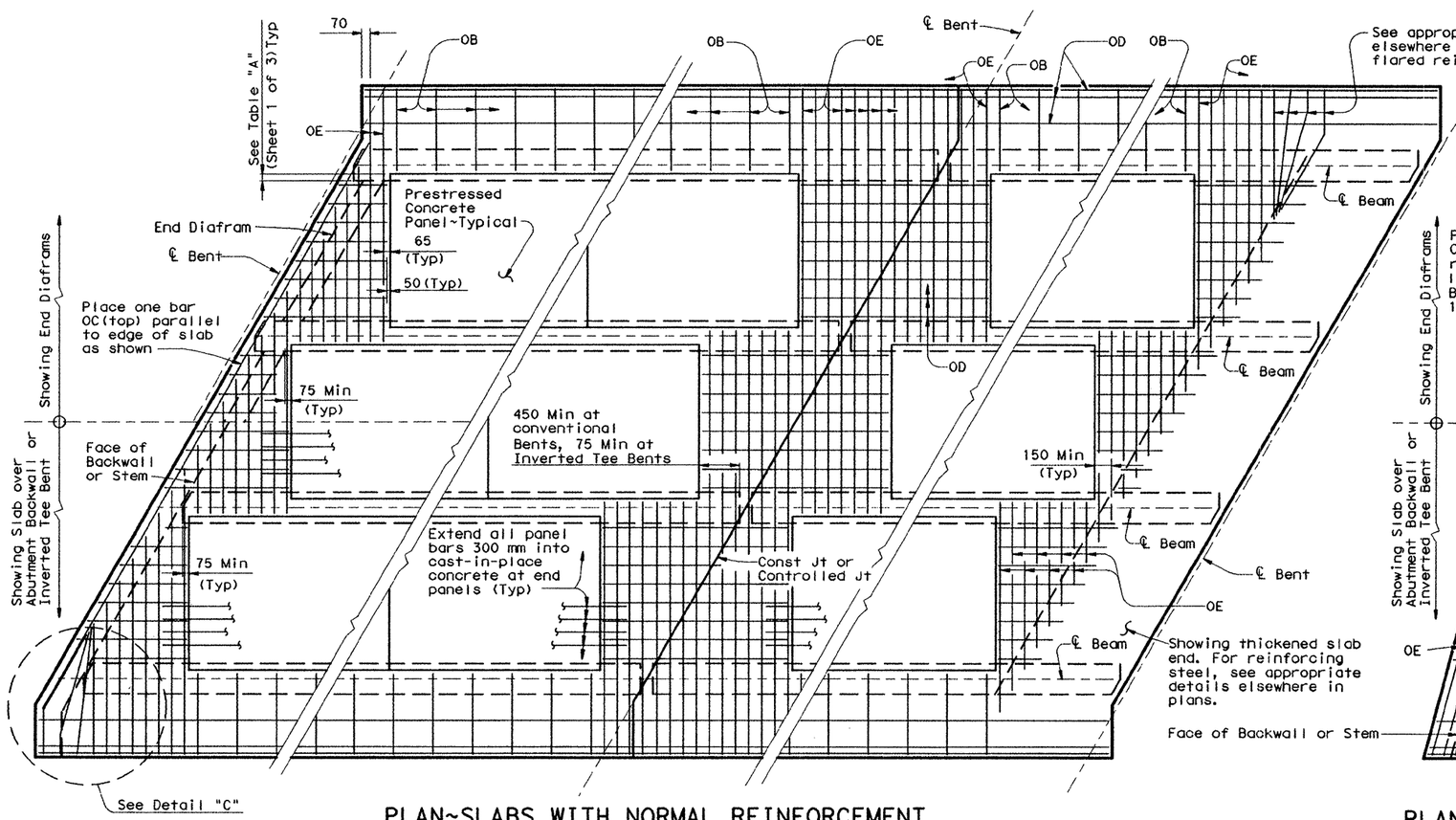

PLAN~SLABS WITH NORMAL REINFORCEMENT

(Showing bottom reinforcing steel. For top reinforcement see Transverse Sections on Sheet 2 of 3 and Detail "A".)

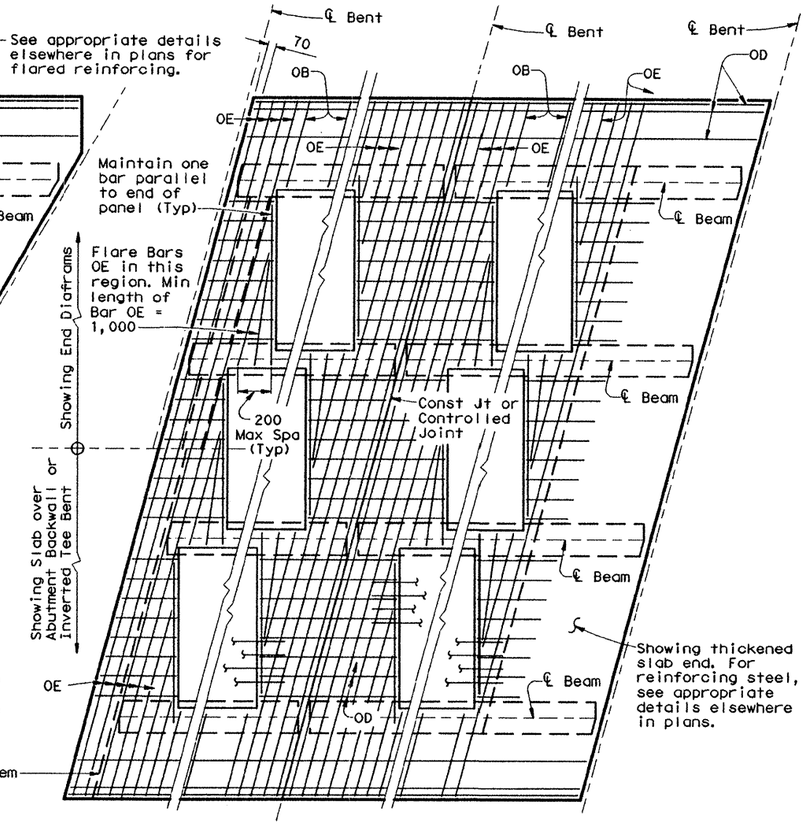

PLAN~SLABS WITH SKEWED REINFORCEMENT

(Showing bottom reinforcing steel. For top reinforcement see Transverse Sections on Sheet 2 of 3.)

APPROXIMATE QUANTITIES FOR ONE SQUARE METER OF CIP SLAB OVER PCP

(For Contractor's information only)

Slab Thickness (mm)	Reinf Steel (kg)	Class S Concrete (m^3)
190	14.55	0.088
195	14.55	0.093
200	14.55	0.098
210	14.55	0.108

Quantities shown do not include an allowance for slab overhangs, thickened ends or diaframs, or the portion between panels over the beams.

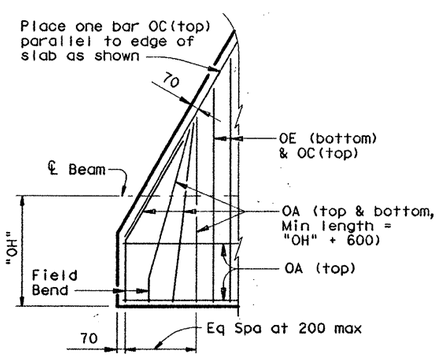

DETAIL "C"

Showing top and bottom reinforcing. Bars OD and OT omitted for clarity.

CHANGE ORDER # 3

SHEET 3 OF 3

Texas Department of Transportation
Design Division (Bridge)

PRESTRESSED CONCRETE PANELS

OPTIONAL DECK DETAILS FOR PRESTRESSED CONC BEAM SPANS

PCP (C) (M)

FILE: pcpstd01.dgn	DN: DOT	CK: DWM	DW: RNP	CK: DNM	STD: B489M
© TxDOT January 1996	DIST	FED REG	FEDERAL AID PROJECT •		SHEET
REVISIONS	SAT	6	CD 2452-1-35		1680
	COUNTY		CONTROL	SECT	JOB	HIGHWAY
	BEXAR		2452	01	035	LP1604

DISCLAIMER:
The Use of this standard is governed by the "Texas Engineering Practice Act". The warranty of this standard is voided by any person for any purpose whatsoever. TxDOT assumes no responsibility for the conversion of this standard to other formats or for incorrect results or damages resulting from its use.

LEVELS DISPLAYED 1 3

ACC:

(LV=1,2 for English; 1,3 for Metric)

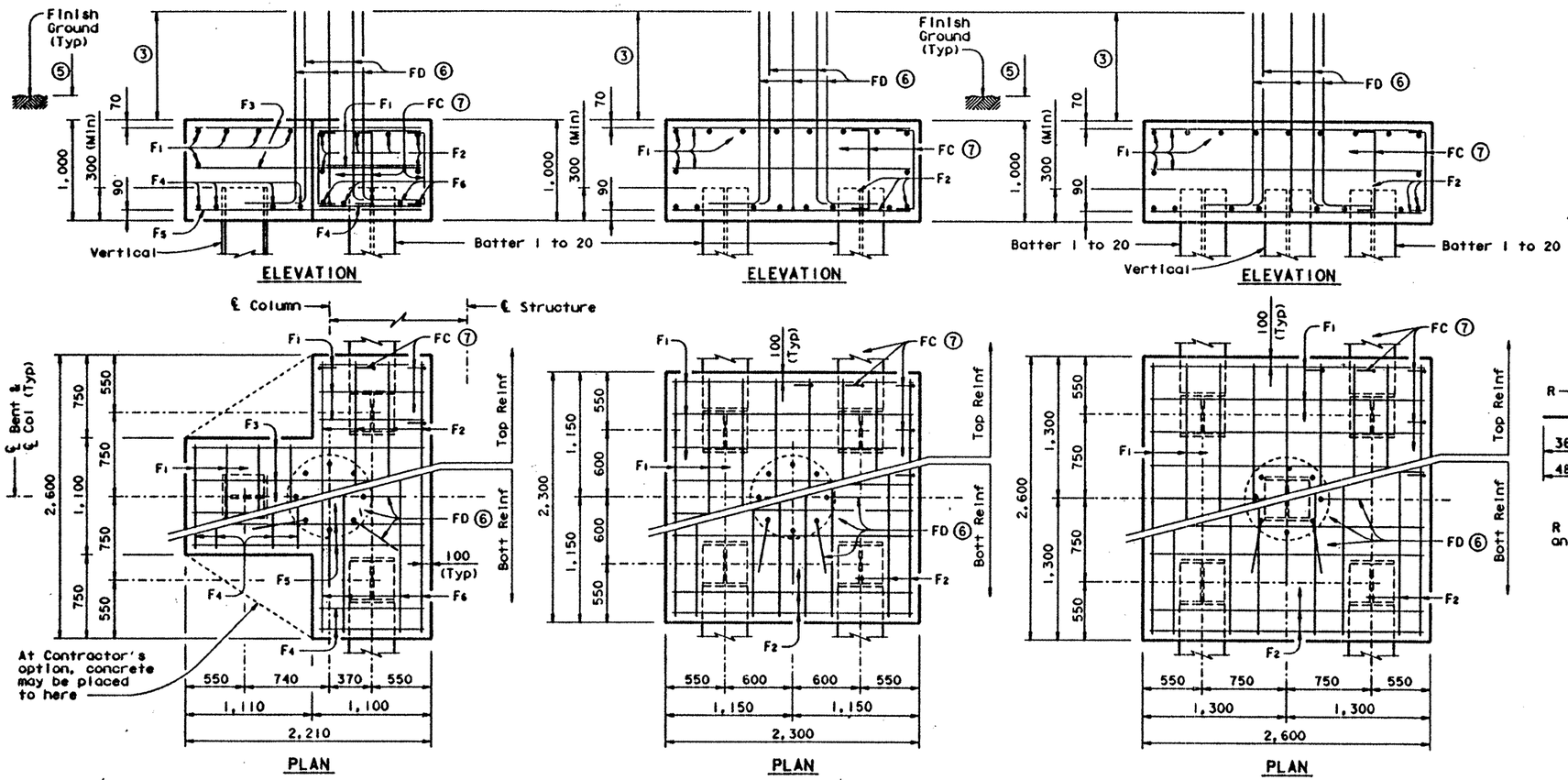

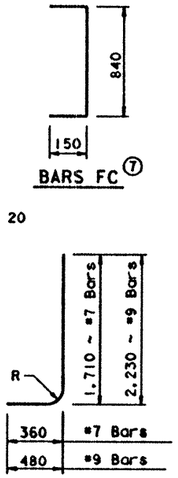

TABLE OF FOOTING QUANTITIES FOR 750 mm COLUMNS

Bar	No.	Size	Length	Weight
ONE 3 PILE FOOTING				
F1	13	# 4	1,000	13
F2	6	# 4	2,500	15
F3	6	# 4	2,110	13
F4	8	# 9	1,000	40
F5	4	# 9	2,110	43
F6	4	# 9	2,500	51
FC	20	# 4	1,140	23
⑧ FD	8	# 9	2,650	107
Reinforcing Steel			kg	305
Class "C" Concrete			m³	4.1
ONE 4 PILE FOOTING				
F1	20	# 4	2,200	44
F2	16	# 8	2,200	140
FC	20	# 4	1,140	23
⑧ FD	8	# 9	2,650	107
Reinforcing Steel			kg	314
Class "C" Concrete			m³	5.3
ONE 5 PILE FOOTING				
F1	22	# 4	2,500	55
F2	16	# 9	2,500	202
FC	22	# 4	1,140	25
⑧ FD	8	# 9	2,650	107
Reinforcing Steel			kg	389
Class "C" Concrete			m³	6.8

⑧ For 600 mm Cols, use #7 FD bars (2,040 mm) in place of #9 bars and deduct 57 kg.
For 900 mm Cols, add 2 FD bars (27 kg)

① #3 Spiral at 150 mm pitch (One flat turn top & bottom)

② Min extension into Abutment Wingwalls = 360 mm
Min extension into Abutment Caps ~ 600 Dia = 480 mm
750 Dia and 900 Dia = 650 mm

③ Min lap with Column reinf:
#7 Bars = 800 mm
#9 Bars = 1,320 mm
Note: Number and size of Col reinf must match FD bars

④ Or as shown on plans

⑤ 150 mm (Min) at Grade Crossing
300 mm (Min) in Channel

⑥ FD bars shall be tied to the top of the bottom mat of reinforcing

⑦ FC bar spacing = 450 mm ±

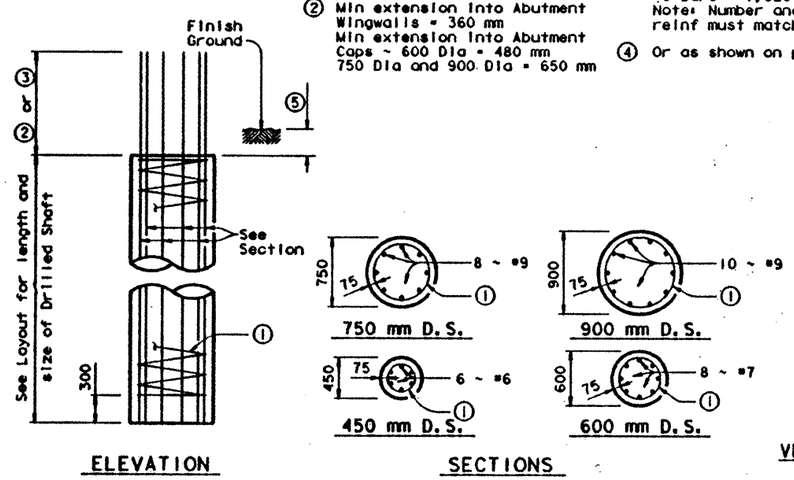

ABUTMENT, WINGWALL, AND INTERIOR BENT DRILLED SHAFTS

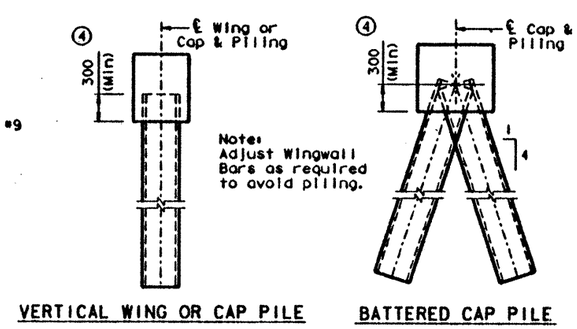

ABUTMENT PILING DETAILS
(Concrete or Steel H)

GENERAL NOTES:

Designed according to current AASHTO Standard Specifications for Highway Bridges.

Details shown on this standard to be used unless shown otherwise in the plans.

See Layout for number, type, size and length of Piling.

Maximum Pile Load for the footings shown shall be as follows: 740 kN/Pile with 600 Dia Column
860 kN/Pile with 750 Dia Column
890 kN/Pile with 900 Dia Column

Standard Footings shall not be used in salt water conditions.

Drilled Shaft reinforcing may be Grade 300.

Oversized Drilled Shafts may be used to accommodate existing equipment.

All dimensions are in millimeters unless otherwise shown.

MS18 LOADING

Texas Department of Transportation
Design Division (Bridge)

COMMON FOUNDATION DETAILS

FD(M)

FILE: fdstd001.dgn	DN: JMH	CK: DWM	DW: RNP	CK: JMH	STD: BZ05M
ORIG DATE: DECEMBER 1995	DIST 15	FED REG 6	FEDERAL AID PROJECT #		SHEET 169
REVISIONS	COUNTY BEXAR		CONTROL	SECT	JOB 1604 HIGHWAY

DISCLAIMER: The use of this standard is governed by the "Texas Engineering Practice Act". No warranty of any kind is made by TxDOT for any purpose whatsoever. TxDOT assumes no responsibility for the conversion of this standard to other formats or for incorrect results or damages resulting from its use.

ACC: (LV=1.2 for English, 1.3 for Metric)
LEVELS DISPLAYED 1 3

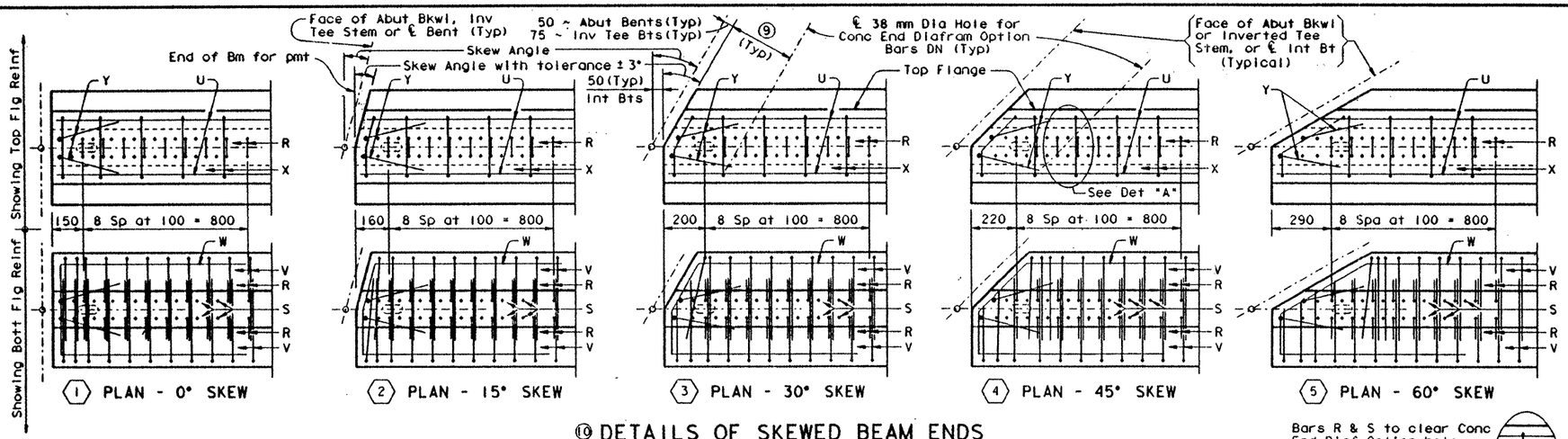

⑩ DETAILS OF SKEWED BEAM ENDS

⑩ Reinforcing patterns shown above are to be used as guides in determining the reinforcement for the actual beam type (Type C shown) and the skew angle used. In general, the distance between consecutive Bars R and/or S shall be 50 mm. This spacing may be varied in order to avoid Dowel Holes or Conc End Diafram Option holes (See Detail "A"). However, a minimum cross sectional area equivalent to that of Bars R & S in square beam end shall be provided.

Note: It is permissible for bars or strands to come in contact with materials used in forming anchor and diafram holes.

Note: See span details for location of interior diaframs, if any. For skewed spans, location of diaframs may vary from beam to beam.

① Note: Anchorage holes may be tapered (120 x 40 mm) at base. If holes are formed with sheet metal, forms may be left in place.

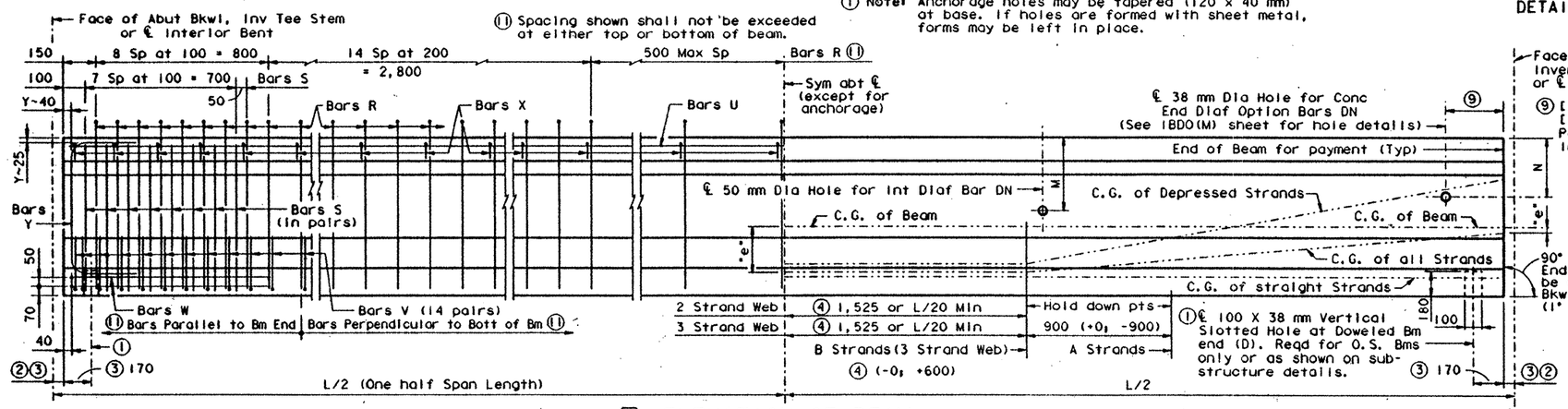

⑥ ELEVATION OF BEAM

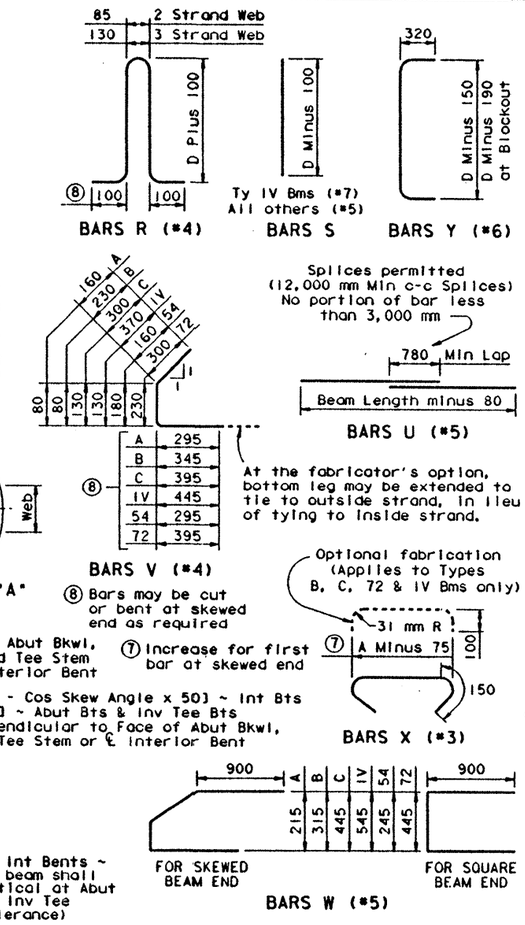

	A	B	C	IV	54	72
	295	345	395	445	295	395

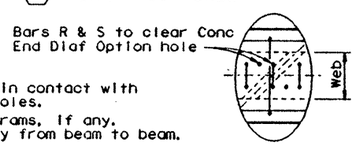

DETAIL "A"

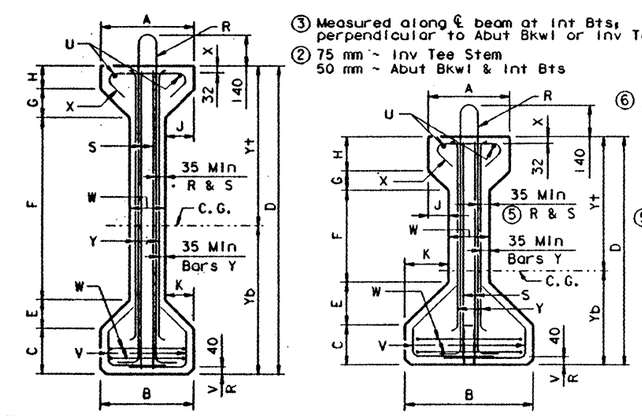

⑥ 1,220 mm / Cosine of Skew Angle

⑦ TYPES 54 & 72 BEAMS

⑧ TYPES A, B, C & IV BEAMS

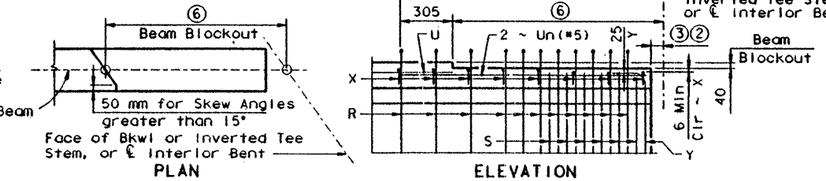

⑨ BLOCKOUT DETAIL FOR THICKENED SLAB END

Note: Beam blockout required only when beam haunch at ℄ Brg is less than 50 mm.

BEAM DIMENSIONS AND SECTION PROPERTIES

BEAM TYPE	A (mm)	B (mm)	C (mm)	D (mm)	E (mm)	F (mm)	G (mm)	H (mm)	J (mm)	K (mm)	M (mm)	N (mm)	W (mm)	Yt (mm)	Yb (mm)	AREA ($10^2 mm^2$)	I ($10^6 mm^4$)	*MASS (kg/m)
A	300	410	125	710	130	280	75	100	75	130	330	380	150	392.8	317.2	1,761	9,309	424
B	300	460	150	865	150	355	70	140	65	145	430	380	170	486.3	378.7	2,347	18,014	564
C	360	560	180	1,015	190	405	90	150	90	190	535	380	180	580.7	434.3	3,219	34,532	774
IV	510	660	200	1,370	230	585	155	200	155	230	840	455	200	741.4	628.6	5,045	107,801	1,213
54	410	410	205	1,370	125	815	125	100	130	130	890	380	150	724.6	645.4	3,169	68,185	762
72	560	560	280	1,830	190	1,030	190	140	190	190	1,195	380	180	972.2	857.8	5,608	222,662	1,348

Note: Tolerance for Dimensions M & N = (+10 mm, -25 mm) (Same tolerance to be applied to all holes for a given Diafram Bar DN).

*Assumes 2,403 kg/m³ unit density of concrete

GENERAL NOTES:

Designed in accordance with current AASHTO Specifications.
All concrete shall be Class H.
Bottom corners of all beam flanges and outside corners of exterior beam ends shall be chamfered 20 mm or rounded to a 40 mm radius.
Diafram holes in ends of beam only for use with concrete end diafram option.
The use of diafram holes for lifting purposes will not be permitted.
All reinforcing bars for beams shall be Grade 420.
All dimensions are in millimeters unless otherwise shown.
An equal area of welded wire fabric may be substituted for Bars R, V, S or X if approved by the Engineer.

MS18 LOADING

Texas Department of Transportation
Design Division (Bridge)

PRESTRESSED CONCRETE I-BEAM DETAILS

IBA (M)

FILE: Ibstd001.dgn	DN: THD	CK: MLR	DW: DRG	CK: LDS	STD: B207M
ORIG DATE: JULY 1996	DIST 15	FED REG 6	FEDERAL AID PROJECT		SHEET 170
REVISIONS	COUNTY BEXAR		CONTROL	SECT	JOB 1604 HIGHWAY

DISCLAIMER:
The use of this standard is governed by the "Texas Engineering Practice Act". No warranty of any kind is made by TxDOT for any purpose whatsoever. TxDOT assumes no responsibility for the conversion of this standard to other formats or for incorrect results or damages resulting from its use.

ACC: (LV=1.3 for Metric)
LEVELS DISPLAYED 1 3

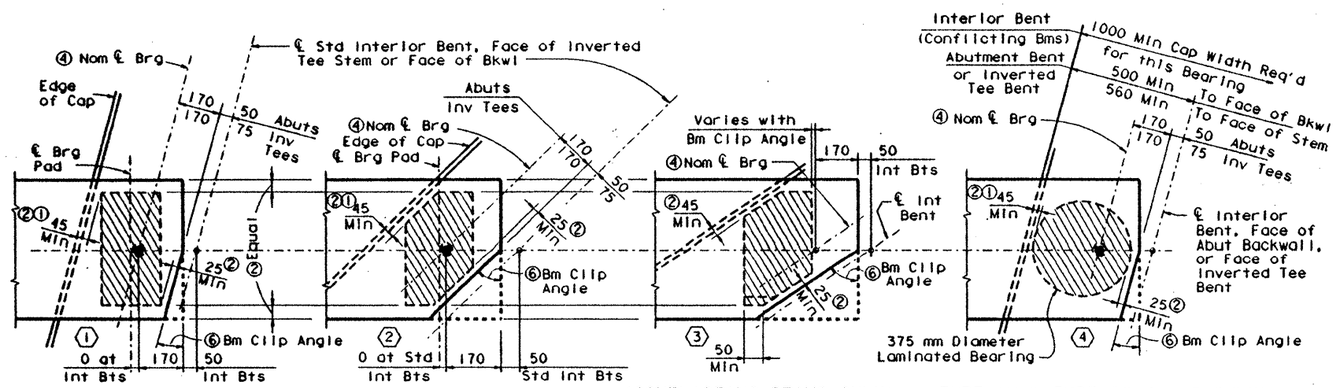

ELASTOMERIC BEARING PLACEMENT DIAGRAMS

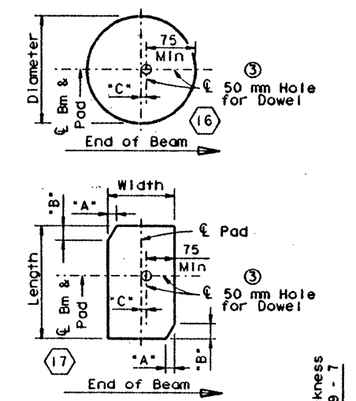

PLANS

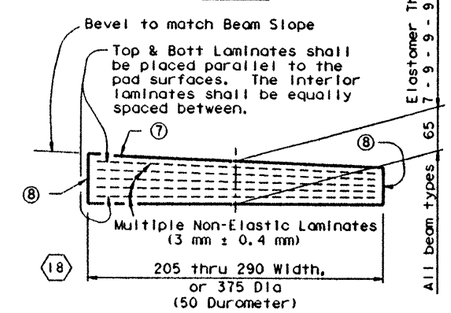

ELEVATION

FABRICATION DETAILS

GENERAL NOTES:

Beams shall be seated on elastomeric bearings of the dimensions shown.

Constant thickness bearings may be used for moderate beam slopes if the variation is within the allowable dimensional tolerances given in the specifications.

Shop drawings will be required for all pads not shown or modified in the table.

Cost of furnishing and installing elastomeric bearings shall be included in unit price bid for "Prestressed Concrete Beams".

All dimensions are in millimeters unless otherwise shown.

Note: The use of Polyisoprene (natural rubber), for the manufacture of bearing pads, shall not be permitted.

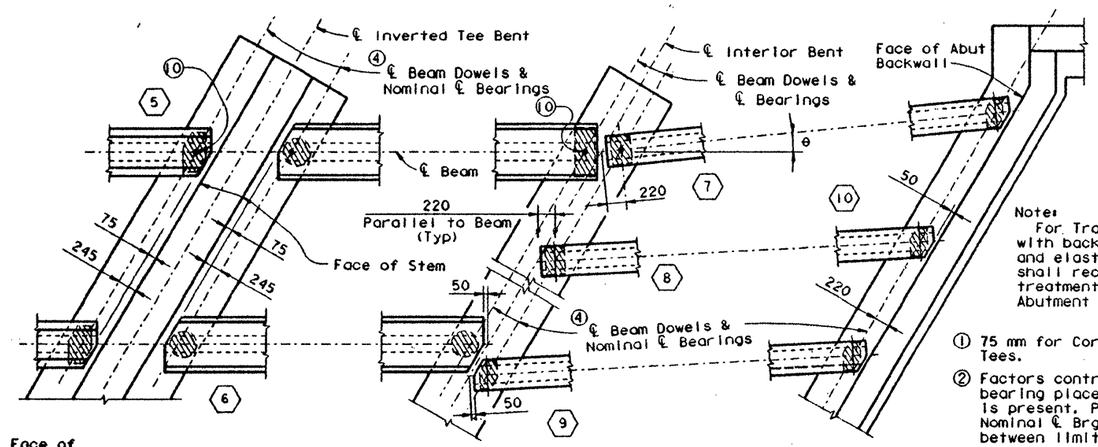

Note: For Transition Bents with backwall, beams and elastomeric bearings shall receive the same treatment as shown for Abutment Bents

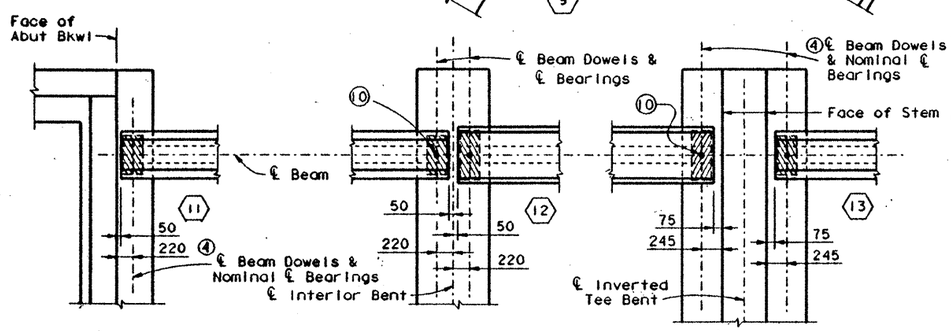

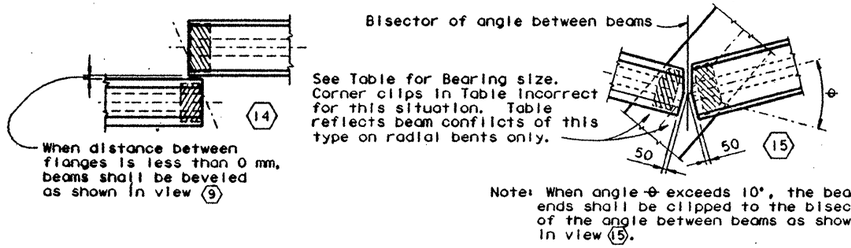

Note: When angle θ exceeds 10°, the beam ends shall be clipped to the bisector of the angle between beams as shown in view ⑮.

BEAM END DETAILS

① 75 mm for Corbels of Inverted Tees.

② Factors controlling laminated bearing placement if no dowel is present. Place ℄ Pad as near Nominal ℄ Brg as possible between limits shown.

③ Provide 50 mm Dia Hole (always on beam end side of centerline pad) only at locations required. See substructure details for location.

④ For purposes of computing Bearing Seat Elevations, nominal centerline of bearing shall be defined as shown. The actual center of bearing pad may vary from this line, according to the "C" value shown in Table. If table shows no "C" value, See ②

⑤ Interpolate "C" values for angles not shown between 30° & 40°, 40° & 50°, 50° & 60°.

⑥ Compliment of Beam Angle except at some conflicting beams. See ⑮

⑦ Locate "BRG TYPE" identification here

⑧ Locate Permanent Mark here

⑨ To be completed by the Contractor for use by the Bearing Fabricator.

⑩ Provide Beam Dowels for outside beams only when shown (D) on Layout (Beams adjacent to a longitudinal joint at the median are considered as outside beams).

ELASTOMERIC BEARING FABRICATION DATA TABLE

Loc.	Beam Type	Brg Type	Est Brg Quant ⑨	Bm End Clip Angle Range	Pad Size Wdth x Lgth	"A"	"B"	"C" ③
AT ABUTMENTS, INVERTED TEES & TRANSITION BENTS WITH BACKWALLS	A	A-1		0° thru 15°	205 x 355	—	—	10
	A	A-2		15°+ thru 45°	205 x 355	65	65	10
	A	A-3		45°+ thru 60°	205 x 355	110	65	10
	B	B-1		0° thru 15°	205 x 405	—	—	10
	B	B-2		15°+ thru 45°	205 x 405	90	90	10
	B	B-3		45°+ thru 60°	230 x 405	165	105	10
	C	C-1		0° thru 8°	230 x 480	—	—	10
	C	C-2		8°+ thru 20°	230 x 480	45	115	10
	C	C-3		20°+ thru 45°	260 x 480	155	155	10
	C	C-4		45°+ thru 60°	290 x 480	260	170	10
	54	54-1		0° thru 13°	230 x 355	—	—	10
	54	54-2		13°+ thru 25°	230 x 355	35	70	10
	54	54-3		25°+ thru 45°	230 x 355	80	80	10
	54	54-4		45°+ thru 60°	230 x 355	125	80	10
	IV	IV-1		0° thru 15°	230 x 560	—	—	40
	IV	IV-2		15°+ thru 29°	230 x 560	80	130	40
	IV & 72	IV-3		⑤ 30°	375 Dia	—	—	51
	IV & 72	IV-4		⑤ 40°	375 Dia	—	—	59
	IV & 72	IV-5		⑤ 50°	375 Dia	—	—	70
	IV & 72	IV-6		⑤ 60°	375 Dia	—	—	90
	72	72-1		0° thru 15°	230 x 505	—	—	40
	72	72-2		15°+ thru 30°	230 x 505	55	95	40
AT INTERIOR BENTS ⑨ & ⑮ — Square Bm Ends	A	A-4		ALL	205 x 355	—	—	0
	B	B-4		ALL	205 x 405	—	—	0
	C	C-5		0° thru 15°	230 x 480	—	—	0
	C	C-6		15°+ thru 55°	230 x 480	40	60	0
	C	C-7		55°+ thru 60°	230 x 480	—	—	0
	54	54-5		ALL	230 x 355	—	—	0
	IV	IV-9		ALL	230 x 560	—	—	0
	72	72-3		ALL	230 x 505	—	—	0
AT INTERIOR BENTS ⑨ & ⑮ — See Clipped Bm Ends	A	A-5		0° thru 18°	205 x 355	—	—	17
	A	A-6		18°+ thru 45°	205 x 355	55	55	—
	A	A-7		45°+ thru 60°	205 x 355	75	55	—
	B	B-5		0° thru 15°	205 x 405	—	—	15
	B	B-6		15°+ thru 45°	205 x 405	80	80	—
	B	B-7		45°+ thru 60°	205 x 405	120	80	—
	C	C-8		0° thru 9°	230 x 480	—	—	10
	C	C-9		9°+ thru 25°	230 x 480	60	130	30
	C	C-10		25°+ thru 45°	260 x 480	145	160	—
	C	C-11		45°+ thru 60°	290 x 480	230	160	—
	54	54-6		0° thru 13°	230 x 355	—	—	13
	54	54-7		13°+ thru 45°	230 x 355	70	70	—
	54	54-8		45°+ thru 60°	230 x 355	95	70	—
	IV	IV-10		0° thru 13°	230 x 560	—	—	40
	IV	IV-11		13°+ thru 30°	230 x 560	60	100	—
	IV & 72	IV-12		30°+ thru 60°	375 Dia	—	—	—
	72	72-4		0° thru 15°	230 x 505	—	—	40
	72	72-5		15°+ thru 30°	230 x 505	40	70	—

Table based on 1,000 mm cap width for Type 72 and IV Beams; 850 mm cap width for all other type beams.

Table based on 560 mm inverted Tee corbel width for Type 72 and IV Beams; 500 mm corbel width for all other type beams.

MS18 LOADING

Texas Department of Transportation
Design Division (Bridge)

ELASTOMERIC BEARING AND BEAM END DETAILS
(FOR PRESTR CONC I-BEAMS)

IBB (M)

FILE: ibstd002.dgn	DN: THD	CK: JCC	DW: DRG	CK: LDS	STD: B208M
ORIG DATE: JULY 1996	DIST 15	FED REG 6	FEDERAL AID PROJECT		SHEET 171
REVISIONS	COUNTY BEXAR	CONTROL	SECT	JOB	HIGHWAY 1604

DISCLAIMER: The use of this standard is governed by the "Texas Engineering Practice Act". No warranty of any kind is made by TxDOT for any purpose whatsoever. TxDOT assumes no responsibility for the conversion of this standard to other formats or for incorrect results or damages resulting from its use.

ACC: (LV=1.3 for Metric)

LEVELS DISPLAYED: 1 3

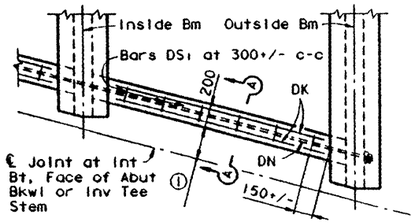

PLAN OF END DIAFRAMS

① 295 ~ Inv Tee Bts
270 ~ Abut Bts & Int Bts

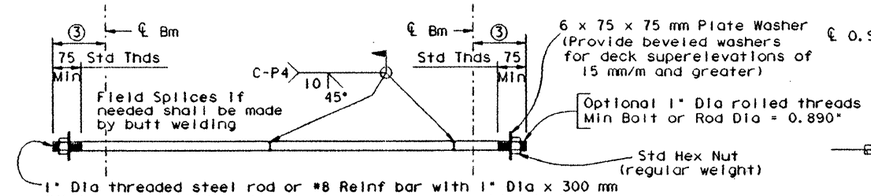

Note: After fabrication, the nuts, plates, sleeves, and not less than 250 mm of each end of the threaded bar shall be galvanized. Plate washers, nuts, and pipe sleeves are to be considered subsidiary to reinforcing steel.

BARS DN

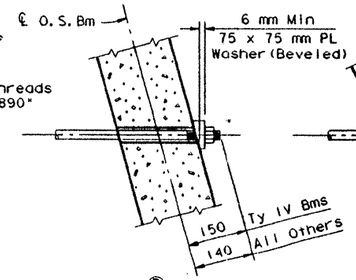

③ BARS DN (SKEWS THRU 15°)

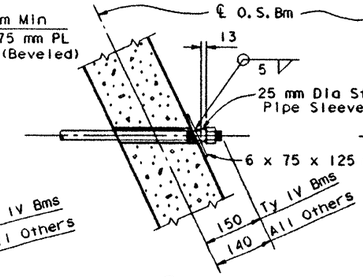

③ BARS DN (SKEWS OVER 15°)

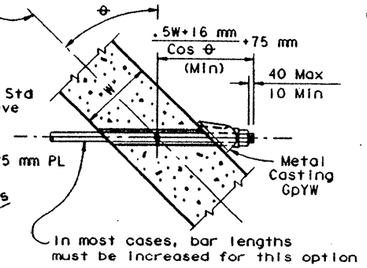

③ BARS DN WITH OPTIONAL CASTING FOR ALL SKEWS

Note: Details of metal casting GpYW are available upon request from the Texas Department of Transportation. No additional payment will made for castings or extra bar length furnished under this option. Castings are to be considered subsidiary to reinforcing steel.

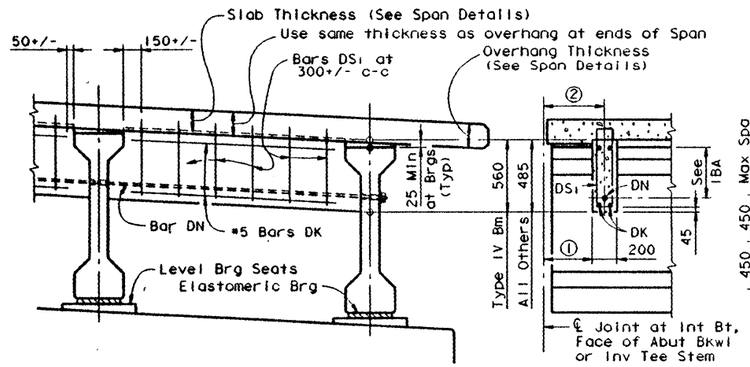

ELEVATION - END DIAFRAMS

SECTION A-A

② 395 ~ Inv Tee Bts
370 ~ Abut Bts & Int Bts

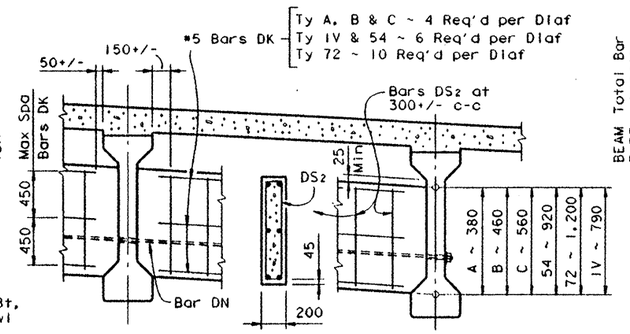

ELEVATION - INTERIOR DIAFRAMS

CONCRETE DIAFRAM OPTION

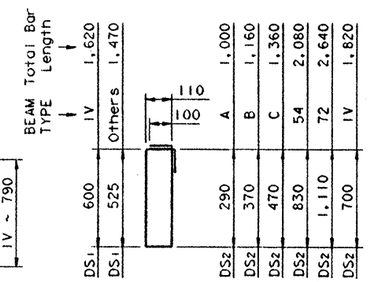

#4 BARS DS1 & DS2

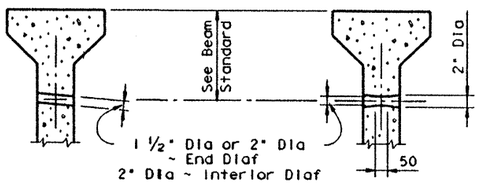

Form holes parallel to roadway slope if superelevation is greater than 3 percent for 1 ½" Dia holes or 6 percent for 2" Dia holes.

DIAFRAM HOLE LOCATIONS

CONCRETE DIAFRAM NOTES:

All Cast-in-place concrete shall be Class S unless otherwise shown on span details.

No concrete shall be placed in the bridge slab until the diaframs are in place, the diafram concrete has reached a minimum flexural strength of 2,070 kPa, and the nuts of bars DN have subsequently been firmly tightened.

GENERAL NOTES:

Designed in accordance with current Specifications.

End Diafram options hereon may be used in lieu of the Thickened Slab Ends shown on the IBTS(M) Sheet or Span Details.

Number and location of interior Diaframs shall be shown elsewhere in the plans.

Contractor shall notify prestressed beam fabricator as to which diafram option he intends to use. Option selected shall be incorporated in shop drawings.

Payment for any diafram option used shall be included in the price bid for Reinforced Concrete Slab.

All reinforcing shall be Grade 420.

All dimensions are in millimeters unless otherwise shown.

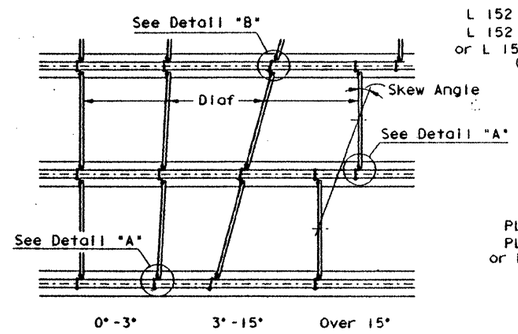

PLAN OF DIAFRAM FRAMING

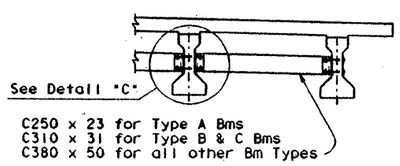

ELEVATION OF DIAFRAMS

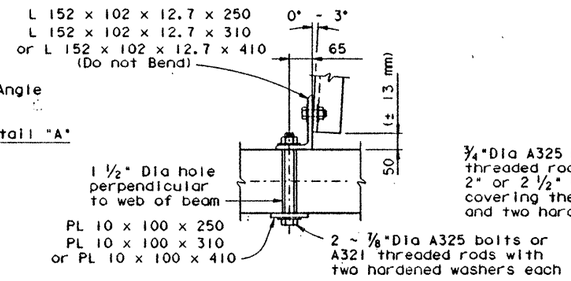

DETAIL "A"

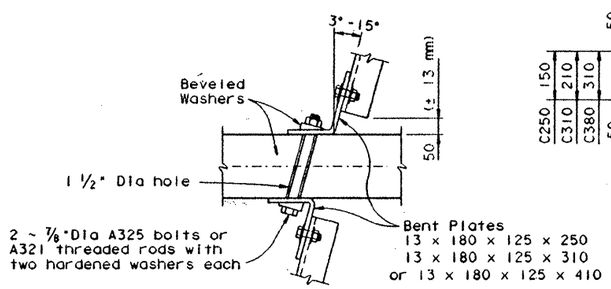

DETAIL "B"

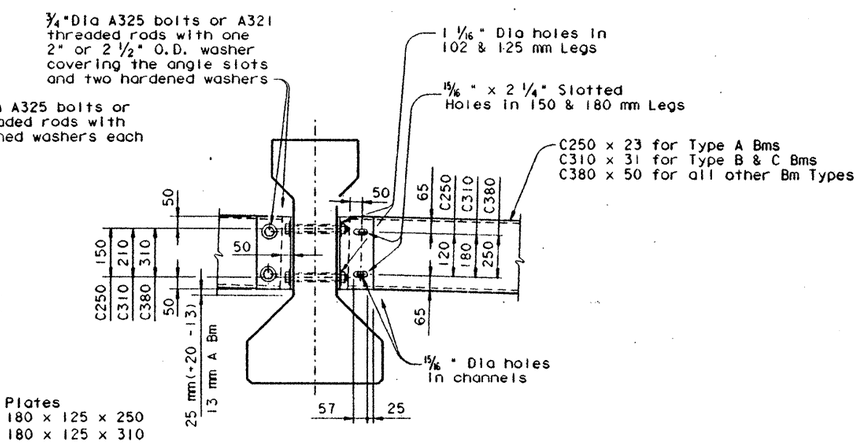

DETAIL "C"

STEEL INTERIOR DIAFRAM OPTION

STEEL DIAFRAM NOTES:

All parts of steel diaframs shall be galvanized after fabrication. After erection, all scratched or otherwise damaged galvanized parts shall be repaired in accordance with item "Galvanizing".

MS18 LOADING

Texas Department of Transportation
Design Division (Bridge)

DIAFRAM OPTIONS FOR PRESTRESSED I-BEAMS

IBDO(M)

FILE: Ibstd003.dgn	DN: THD	CK: THD	DW: DRG	CK: LDS	STD: B209M
ORIG DATE: July 1996	DIST 15	FED REG 6	FEDERAL AID PROJECT #		SHEET 172
REVISIONS	COUNTY BEXAR		CONTROL	SECT	JOB	HIGHWAY 1604

DISCLAIMER:
The use of this standard is governed by the "Texas Engineering Practice Act". No warranty of any kind is made by TxDOT for any purpose whatsoever. TxDOT assumes no responsibility for the conversion of this standard to other formats or for incorrect results or damages resulting from its use.

ACC: (LV=1.2 for English; 1.3 for Metric)

LEVELS DISPLAYED: 1 3

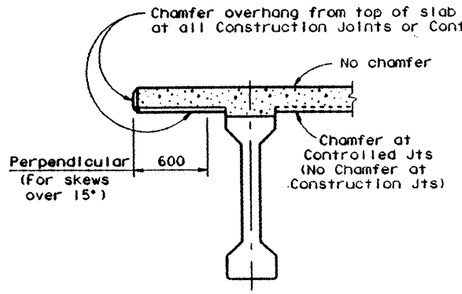

CHAMFER LIMITS DETAIL

Note: See Span details for type of joint and joint locations.

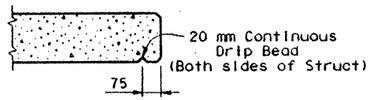

DRIP BEAD DETAIL

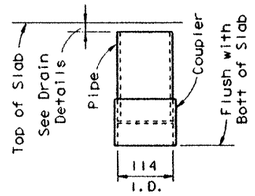

C.I.P. DRAIN DETAIL

Note: Roughen outside of PVC with coarse rasp or equal to ensure bond with cast-in-place concrete.

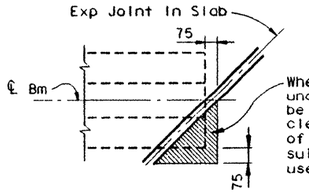

Where corners of Beam Flanges project under slab of adjacent span, care shall be taken to provide a minimum of 13 mm clearance between top of beam and bottom of adjacent slab. Polystyrene or other suitable compresssible material may be used as a filler.

TREATMENT AT BEAM END FOR SKEWED SPANS

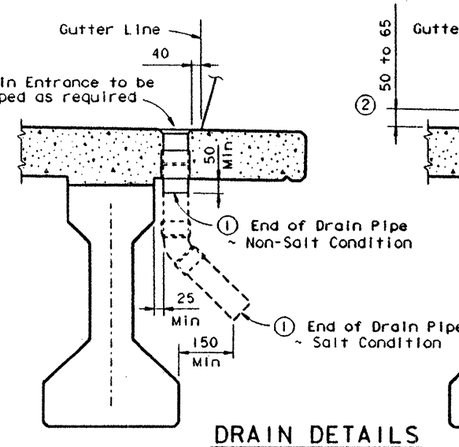

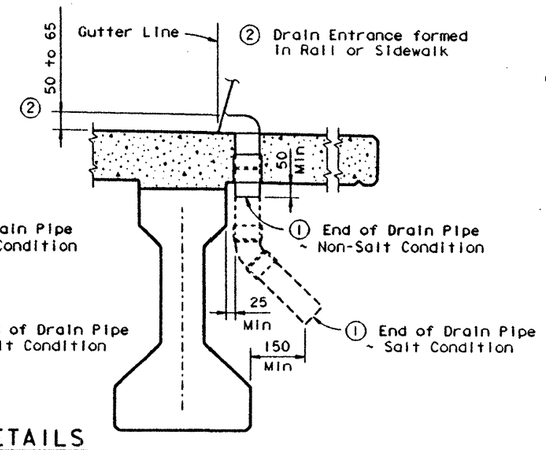

DRAIN DETAILS

① The longer drain length shown shall be used on structures where the use of deicing salts is anticipated.

Note: All drain pipe and fittings to be 102 mm diameter (Sch 40) PVC. See Item 481 "PVC Pipe for Bridge Drains" for pipe, connections and solent welding. Bend reinforcing steel to clear PVC 25 mm. Drain length and location shall be as directed by the Engineer. No drains shall be permitted over roadways or railways, or within 3,000 mm of Bent Caps. Degrease outside of exposed PVC, apply acrylic water base primer, then coat with same surface finishing material as used for outside girder face. Variations of the above designs, as required for the type of rail used and it's location on the structure, shall be installed with the approval and direction of the Engineer. No water shall be discharged onto girders.

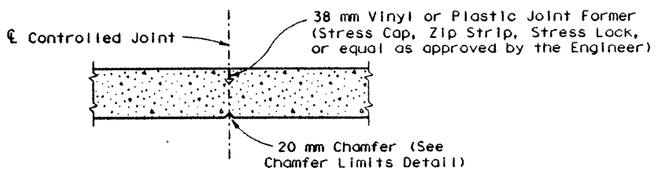

CONTROLLED JOINT DETAIL

Note: For continuous placement, the minimum rate of concrete placing and finishing shall not be less than 9,000 linear mm of bridge deck per hour.

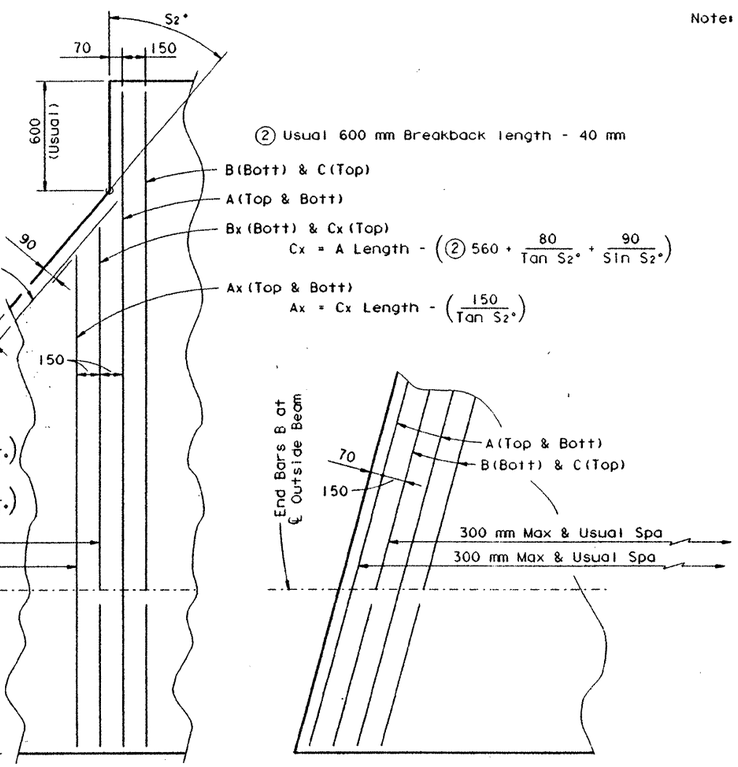

PARTIAL PLAN OF SLAB END WITH BREAKBACK

(For use with Concrete End Diafram Option ~ See IBDO(M) Standard)

Note: Bar length formulas shown for constant width slabs. Adjustment shall be made for slab taper or flare.

PARTIAL PLAN OF SLAB END WITHOUT BREAKBACK

(For use with Concrete End Diafram Option ~ See IBDO(M) Standard)

GENERAL NOTES:

Designed in accordance with current AASHTO Specifications.

All cast-in-place concrete shall be Class S unless otherwise shown on span details.

All reinforcing steel shall be Grade 420. See Span Detail sheet for epoxy coating requirements and lap lengths, if required.

All dimensions are in millimeters unless otherwise shown.

MS18 LOADING

Texas Department of Transportation
Design Division (Bridge)

MISCELLANEOUS SLAB DETAILS FOR PRESTRESSED I-BEAMS

IBMS(M)

FILE: Ibstd004.dgn	DN: THD	CK: THD	DW: DRG	CK: LDS	STD: B210M		
ORIG DATE: JULY 1996	DIST	FED REG	FEDERAL AID PROJECT			SHEET	
REVISIONS	15	6				173	
	COUNTY			CONTROL	SECT	JOB	HIGHWAY
	BEXAR					1604	

DISCLAIMER:
The use of this standard is governed by the "Texas Engineering Practice Act". No warranty of any kind is made by TxDOT for any purpose whatsoever. TxDOT assumes no responsibility for the conversion of this standard to other formats or for incorrect results or damages resulting from its use.

LEVELS DISPLAYED | ACC: | (LV=1.2 for English, 1.3 for Metric)

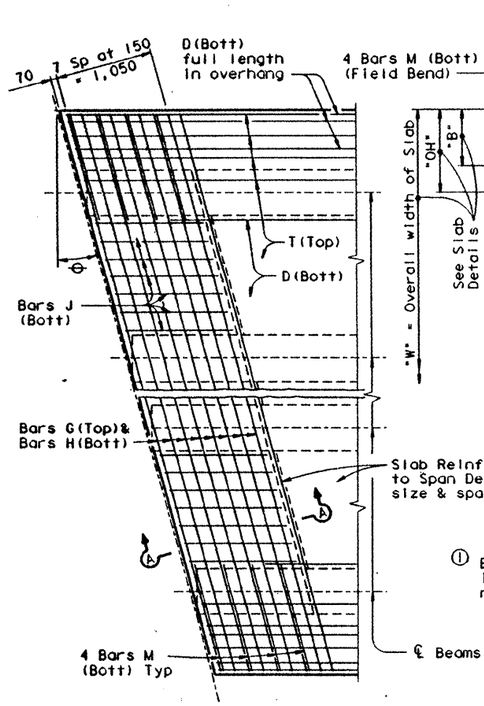

PARTIAL PLAN FOR SLABS WITHOUT BREAKBACK

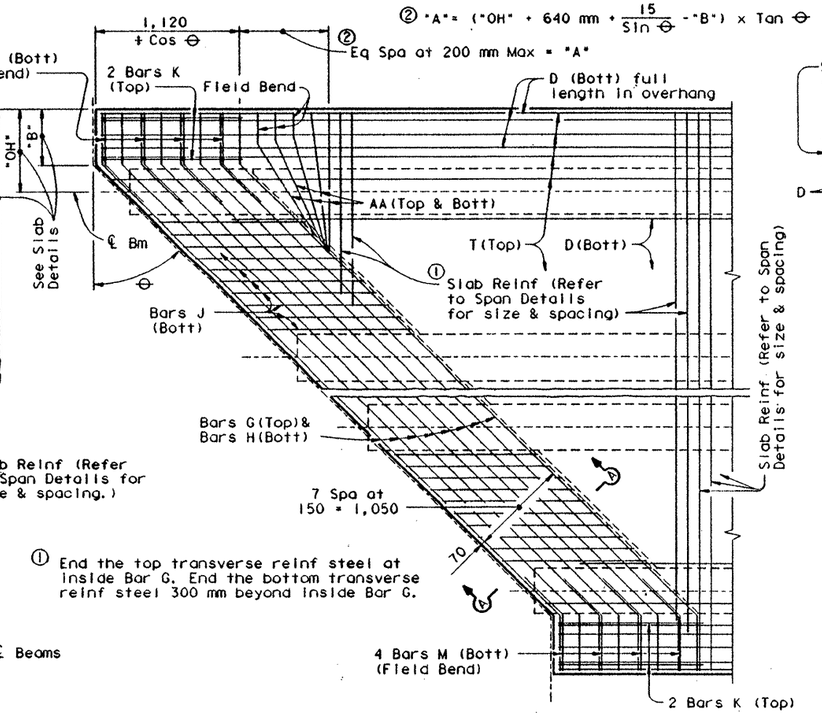

PARTIAL PLAN FOR SLABS WITH BREAKBACK

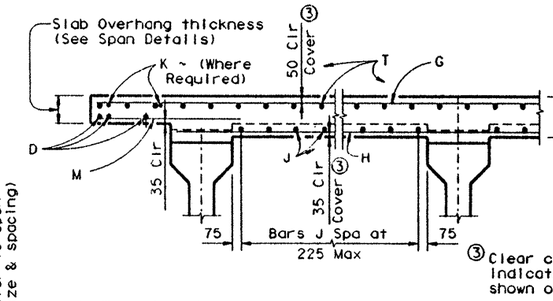

TYPICAL TRANSVERSE SECTION

③ Clear cover shall be as indicated unless otherwise shown on Span Details.

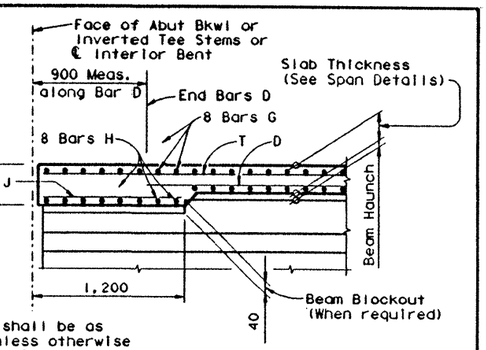

SECTION A-A

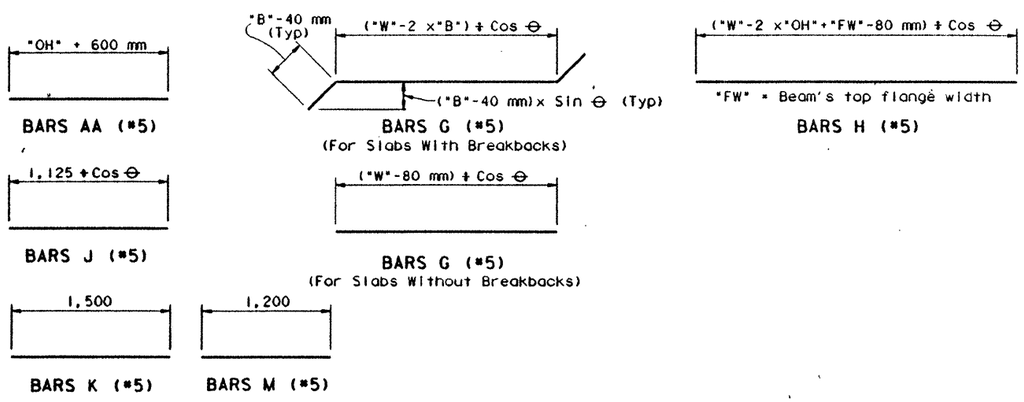

GENERAL NOTES:

Designed according to current AASHTO Standard Specifications for Highway Bridges.

All reinforcing bars shall be Grade 420 steel.

Unless otherwise shown or noted hereon, all Span Details remain unchanged.

If the top and/or bottom layer of reinforcing steel is shown on the Slab Details to be epoxy coated, then the G & K and/or H, J & M bars shall be epoxy coated.

All dimensions are in millimeters unless otherwise shown.

Bar laps, where required, shall be as follows:

Uncoated ~ #4 = 440 mm
~ #5 = 560 mm
Epoxy Coated ~ #4 = 660 mm
~ #5 = 820 mm

MS18 LOADING

Texas Department of Transportation
Design Division (Bridge)

THICKENED SLAB END DETAILS FOR PRESTR I-BEAM SPANS

IBTS(M)

FILE: Ibstd006.dgn	DN: THD	CK: DWM	DW: DRG	CK: LDS	STD: B212M
ORIG DATE: JULY 1996	DIST 15	FED REG 6	FEDERAL AID PROJECT		SHEET 174
REVISIONS	COUNTY BEXAR		CONTROL	SECT	JOB / HIGHWAY 1604

DISCLAIMER:
The use of this standard is governed by the "Texas Engineering Practice Act". No warranty of any kind is made by TxDOT for any purpose whatsoever. TxDOT assumes no responsibility for the conversion of this standard to other formats or for incorrect results or damages resulting from its use.

LEVELS DISPLAYED: 1 3 ACC:
(LV=1.2 for English, 1.3 for Metric)

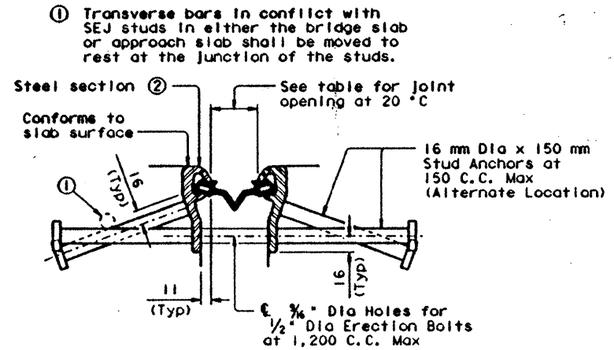

D S BROWN COMPANY

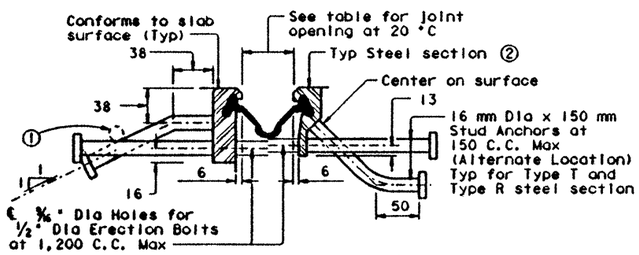

TYPE T TYPE R

WATSON BOWMAN & ACME CORP

SECTIONS THRU SEALED EXPANSION JOINT

D.S. BROWN COMPANY

WATSON BOWMAN & ACME CORP

NEOPRENE SEAL

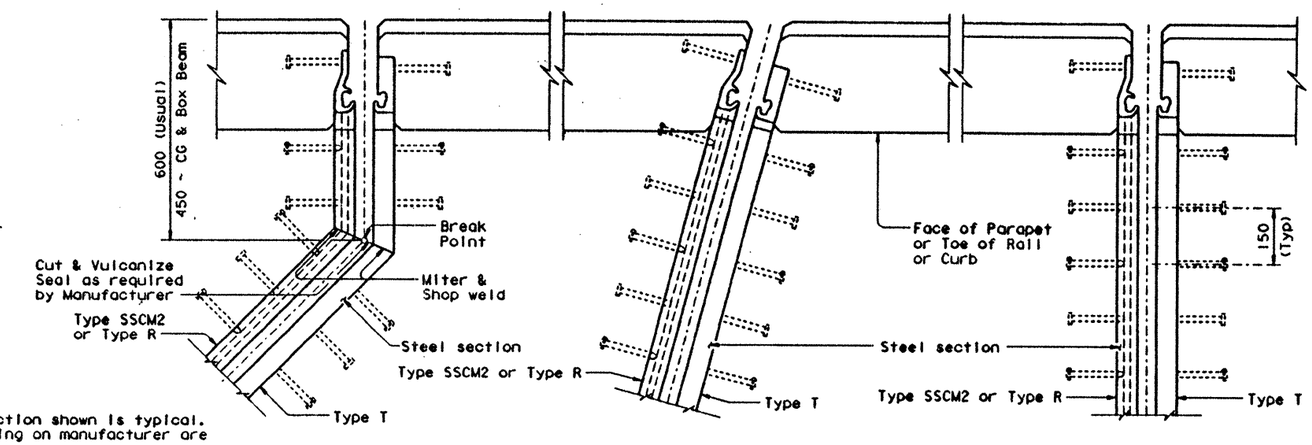

SKEWS WITH SLAB BREAK

SKEWS WITHOUT SLAB BREAK

NORMAL

PLANS OF END CONDITIONS

② Shape of steel section shown is typical. Variations depending on manufacturer are permissible.

③ Remove all burrs which will be in contact with seal prior to making splice.

MANUFACTURER	STEEL SECTION ②	NEOPRENE STRIP SEAL 100 mm JOINT	
		Seal Type	Joint Opening
D.S. Brown	Type SSCM2	A2X	45
Watson Bowmon & Acme Corp	Type T	SE400	45
Watson Bowmon & Acme Corp	Type R	SE400	45

NOTES:

Steel sections shall be shipped in convenient lengths of 7,300 mm Max and 3,000 mm Min unless otherwise necessary for stage construction or widenings. One shop splice will be permitted in each shipping length provided no piece is less than 600 mm in length and sufficient studs are added to limit the stud to shop or field splice distance to 50 mm Min and 100 mm Max.

Shop and field splices shall be made by butt welding with areas in contact with preformed joint sealer to be ground smooth.

Corresponding sections shall be match marked and bolted together for shipment.

All steel parts are not to be painted or primed unless designated elsewhere on the plans.

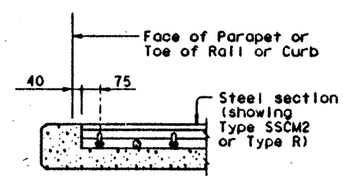

SECTION THRU SLAB

(HIGH SIDE)

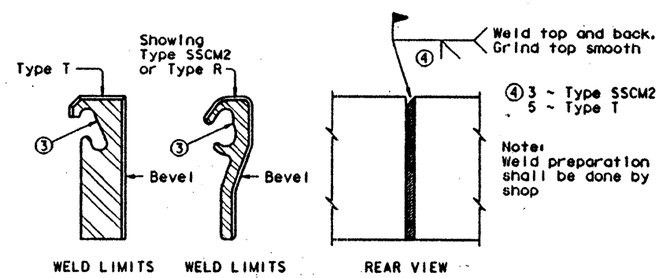

BEVEL AT FIELD SPLICE

(Not to Scale)

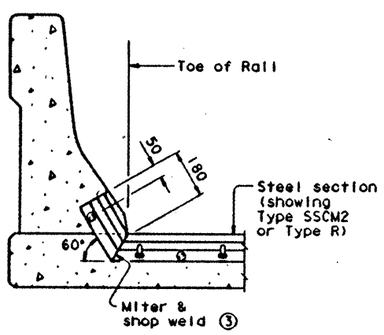

SECTION THRU BARRIER RAIL

(LOW SIDE)

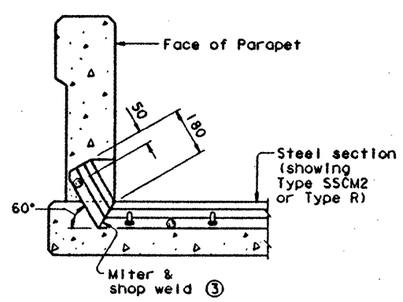

SECTION THRU OTHER PARAPET RAILS

(LOW SIDE)

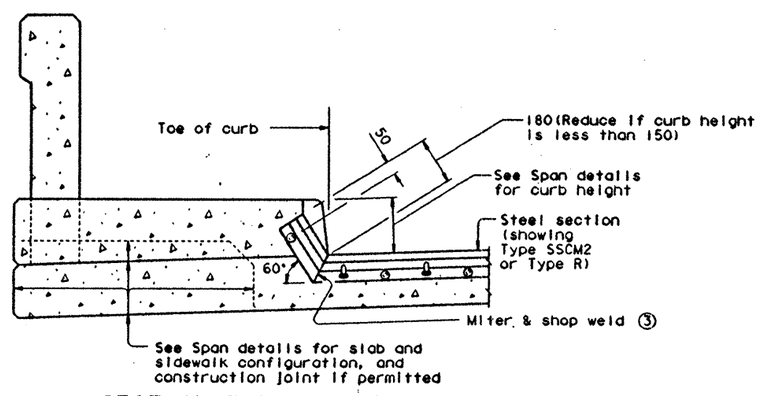

SECTION THRU SIDEWALK

(LOW SIDE)

GENERAL NOTES:

Sealed Exp Jts shall be provided in the size and at locations shown on plans.

Minimum slab thickness required for the use of SEJ-A(M) is 165 mm.

Shop fabrication will be required at all intersections of cross slope and at break points.

At splices, a continuous ground smooth weld shall be provided except on all surfaces in locking contact with seal which shall have no burrs.

Corresponding sections of Sealed Exp Jts shall be temporarily shop assembled, checked for fit, and match marked for shipment.

Erection holes shall be punched so as to line up when Sealed Exp Jts are in their final position.

Stud anchors shall be electric arc end-welded with complete fusion.

The neoprene seal shall be continuous and included in the price bid for Sealed Exp Jt.

The Contractor shall arrange for securing the Sealed Exp Jt in position, and placing to the proper grade and alignment by welding braces to adjacent reinf steel, to prestressed beam stirrups, or to anchors cast in concrete diaframs. Cost of temporary bracing is to be included in the price bid for Sealed Exp Jt.

After bracing and welding the steel section, the erection bolts and spacers shall be removed and erection holes sealed before placing slab concrete.

All dimensions are in millimeters unless otherwise shown.

DISCLAIMER: The use of this standard is governed by the "Texas Engineering Practice Act". No warranty of any kind is made by TxDOT for any purpose whatsoever. TxDOT assumes no responsibility for the conversion of this standard to other formats or for incorrect results or damages resulting from its use.

ACC: (LV=1.2 for English; 1.3 for Metric)

LEVELS DISPLAYED: 1 3

Texas Department of Transportation
Design Division (Bridge)

SEALED EXPANSION JOINT DETAILS

WITHOUT OVERLAY

SEJ-A(M)

FILE:	sejstd01.dgn	DN: THD	CK: THD	DN: JTR	CK: LDS	MSG:	B272M
ORIG DATE: JULY 1995		DIST 15	FED REG 6	FEDERAL AID PROJECT #			SHEET 175
REVISIONS		COUNTY BEXAR		CONTROL	SECT	JOB	HIGHWAY 1604

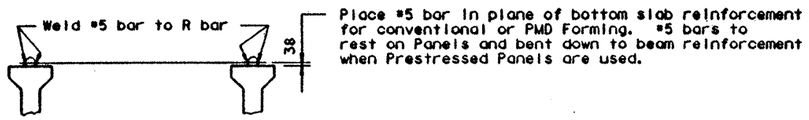

PERMANENT TOP BRACING (5)

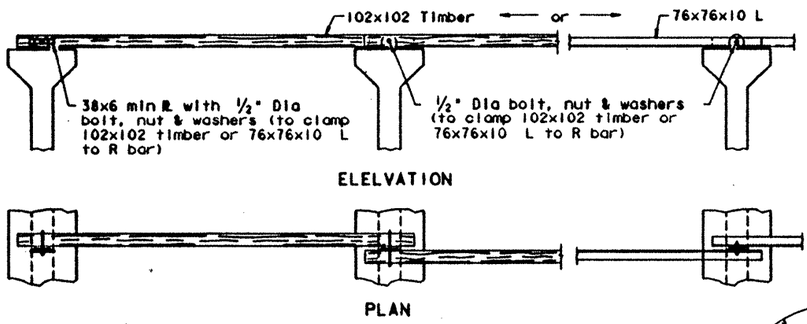

TEMPORARY TOP BRACING (4)

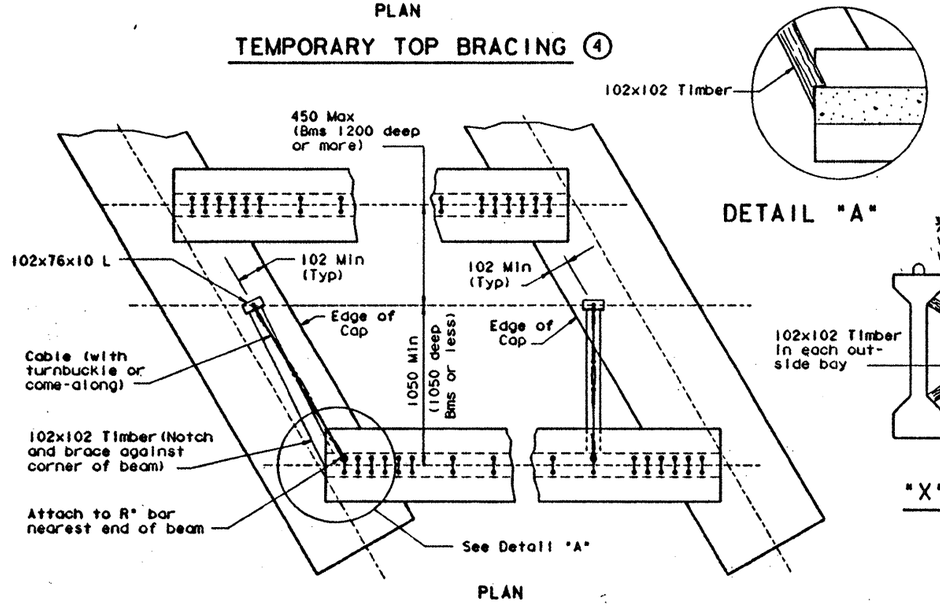

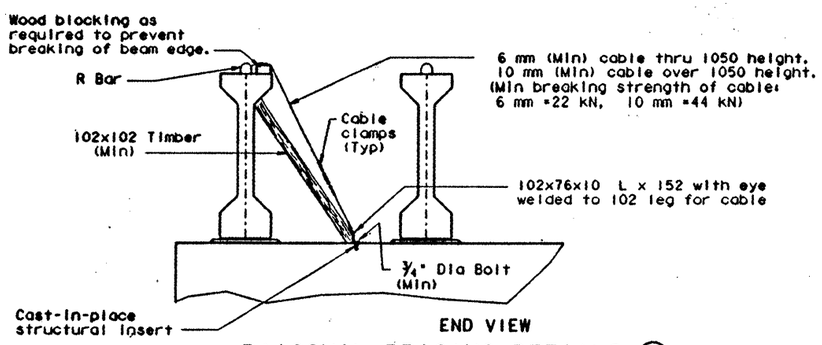

DIAGONAL BRACING DETAILS (1)

(To be used on both ends of the first beam erected in the span.)

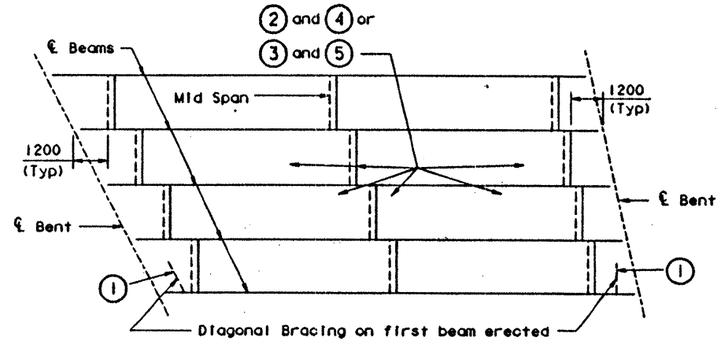

ERECTION BRACING

(NORMAL SPANS AND ALL SKEWS)

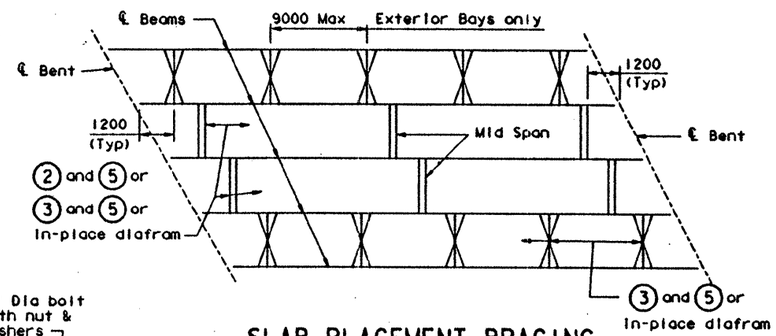

SLAB PLACEMENT BRACING

(NORMAL SPANS AND ALL SKEWS)

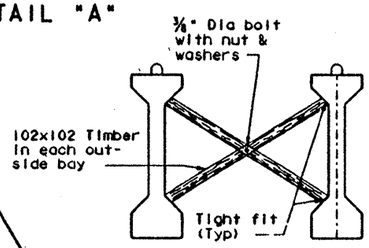

"X" BRACING (3)

Indicates Diagonal Bracing (1)

Indicates Bottom Bracing (2) with Temporary Top Bracing (4) or "X" Bracing (3) with Permanent Top Bracing (5).

Indicates Permanent Top Bracing (5)

Indicates Bottom Bracing (2) or "X" Bracing (3), either one with Permanent Top Bracing (5) or an in-place diafram only.

Indicates "X" Bracing (3) & Permanent Top Bracing (5) or an in-place diafram only.

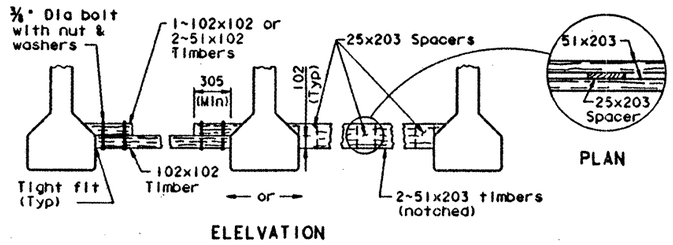

BOTTOM FLANGE BRACING DETAILS (2)

GENERAL NOTES:

ERECTION BRACING:

Erection bracing details are considered minimum for fulfilling the requirements of Specification Item 425 for bracing Types A, B, C, III, IV, and V prestressed concrete beams erected in the span over a traveled way or railroad, and in those spans generally parallel to a traveled way or railroad and within a distance equal to the difference in elevation between the top of cap upon which the beams are being erected and the traveled way, or 9000, whichever is greater.

Required erection bracing shall be placed immediately after erection of each beam and remain in place until diafram bars DN are tightened or additional bracing as required for slab placement is in place.

SLAB PLACEMENT BRACING:

The details for slab placement bracing are considered minimum for fulfilling the requirements of Specification Item 420.

Required slab placement bracing shall remain in place until slab concrete has attained a flexural strength of 500 psi.

GENERAL:

Bracing details for closely spaced beams (as on ramps or railroad structures) are not included herein. The Contractor shall submit his proposed bracing details for such conditions to the Engineer for approval prior to erection.

Systems equal to or better than those shown may be used provided details of such systems are submitted to and approved by the Engineer prior to erection.

Use of these systems and/or details does not relieve the Contractor of the responsibility for the adequacy of the bracing and the safety of the structure.

Removal of bracing for short periods of time to align beams is permissible.

Bottom flange bracing at beam ends may be omitted when all beams are fixed with dowel bars or when erection is on steel caps or floor beams containing bearing seats which restrict lateral movement.

All turn-buckles, come-alongs and other connections shall be capable of developing the full strength of the cable shown hereon.

All dimensions are in millimeters unless otherwise shown.

DISCLAIMER: The use of this standard is governed by the "Texas Engineering Practice Act". No warranty of any kind is made by TxDOT for any purpose whatsoever. TxDOT assumes no responsibility for the conversion of this standard to other formats or for incorrect results or damages resulting from its use.

LEVELS DISPLAYED | ACC: | (LV=1.2 for English, 1.3 for Metric)

Texas Department of Transportation
Design Division (Bridge)

MINIMUM ERECTION AND BRACING REQUIREMENTS

PRESTRESSED CONCRETE BEAM TYPES A, B, C, III, IV & V

MEBR(C)-1(M)

FILE: mebstd01.dgn	DN: THD	CK: THD	DW: LW	CK: LDS	MEG: B112AM
ORIG DATE: JULY 1995	DIST: 15	FED REG: 6	FEDERAL AID PROJECT		SHEET 176
REVISIONS	COUNTY: BEXAR		CONTROL	SECT	JOB 1604 HIGHWAY

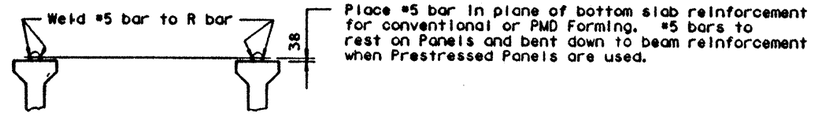

PERMANENT TOP BRACING (5)

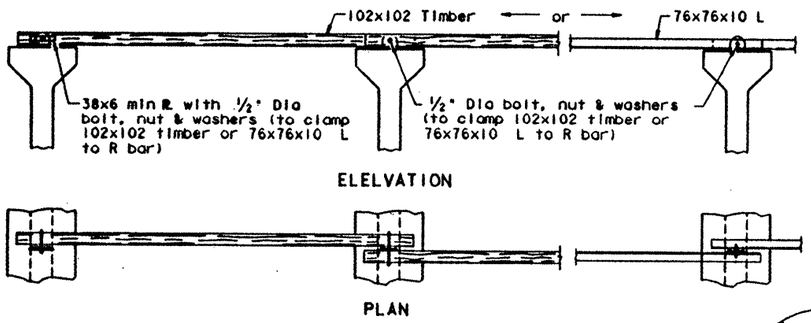

TEMPORARY TOP BRACING (4)

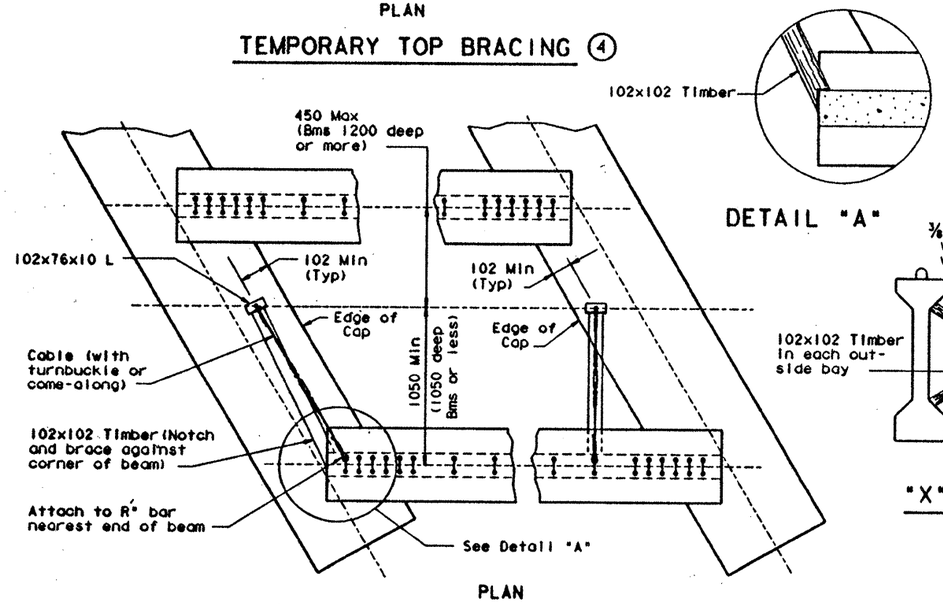

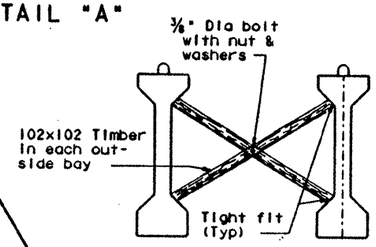

"X" BRACING (3)

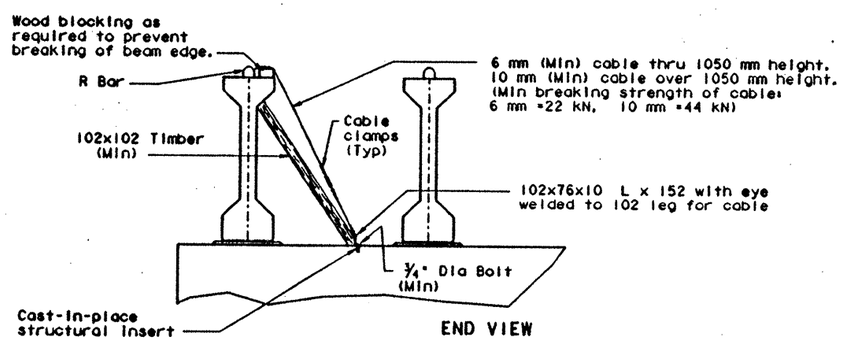

DIAGONAL BRACING DETAILS (1)

(To be used on both ends of the first beam erected in the span.)

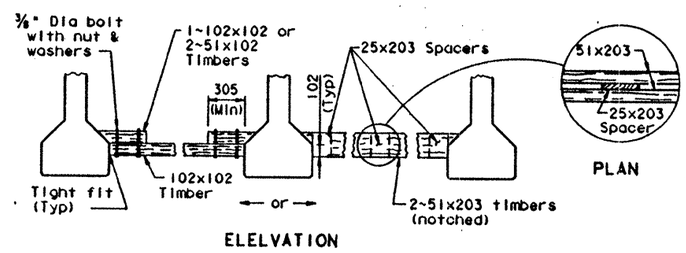

BOTTOM FLANGE BRACING DETAILS (2)

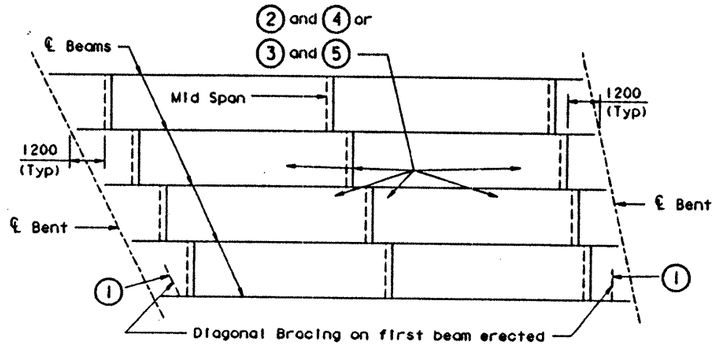

ERECTION BRACING

(NORMAL SPANS AND ALL SKEWS)

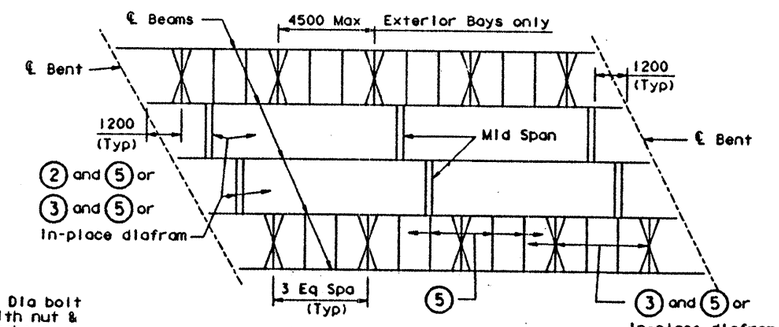

SLAB PLACEMENT BRACING

(NORMAL SPANS AND ALL SKEWS)

Indicates Diagonal Bracing (1)

Indicates Bottom Bracing (2) with Temporary Top Bracing (4) or "X" Bracing (3) with Permanent Top Bracing (5).

Indicates Permanent Top Bracing (5)

Indicates Bottom Bracing (2) or "X" Bracing (3), either one with Permanent Top Bracing (5) or an in-place diafram only.

Indicates "X" Bracing (3) & Permanent Top Bracing (5) or an in-place diafram only.

GENERAL NOTES:

HAULING & ERECTION

The Contractor's attention is directed to the possible lateral instability of Type 48 thru 72 prestressed concrete beams, especially during hauling and erection. The use of the following methods of improving the stability of these beams is encouraged and shall be used when required: Location of lifting devices at the maximum practical distance from the beam ends; use of external lateral stiffening devices during hauling and erection; lifting with vertical lines using two machines and care in handling to minimize inertial and impact forces. External adjustable stiffening devices (hog rods) will be required for any beam in excess of the following actual beam lengths.

Type 48	26,500	Type 66	34,400
Type 54	29,200	Type 72	37,200
Type 60	31,700	Type 54 Mod(305Web)	34,400

These devices shall remain on the beam during hauling from the casting yard and during erection until the required bracing is installed.

ERECTION BRACING:

Erection bracing details are considered minimum for bracing Types 48, 54, 60, 66, 72 and 54 Mod (305Web) prestressed concrete beams regardless of where erected.

Required erection bracing shall be placed immediately after erection of each beam and remain in place until diafram bars DN are tightened or additional bracing as required for slab placement is in place.

SLAB PLACEMENT BRACING:

The details for slab placement bracing are considered minimum for fulfilling the requirements of Specification Item 420.

Required slab placement bracing shall remain in place until slab concrete has attained a flexural strength of 3 MPa.

GENERAL:

Bracing details for closely spaced beams (as on ramps or railroad structures) are not included herein. The Contractor shall submit his proposed bracing details for such conditions to the Engineer for approval prior to erection.

Systems equal to or better than those shown may be used provided details of such systems are submitted to and approved by the Engineer prior to erection.

Use of these systems and/or details does not relieve the Contractor of the responsibility for the adequacy of the bracing and the saftey of the structure.

Removal of bracing for short periods of time to align beams is permissible.

Bottom flange bracing at beam ends may be omitted when all beams are fixed with dowel bars or when erection is on steel caps or floor beams containing bearing seats which restrict lateral movement.

All turn-buckles, come-alongs and other connections shall be capable of developing the full strength of the cable shown hereon.

All dimensions are in millimeters unless otherwise shown.

DISCLAIMER: The use of this standard is governed by the "Texas Engineering Practice Act". No warranty of any kind is made by TxDOT for any purpose whatsoever. TxDOT assumes no responsibility for the accuracy of this standard in other formats or for incorrect results or damages resulting from its use.

ACC: (LV=1.2 for English; 1.3 for Metric)

LEVELS DISPLAYED: 1 3

Texas Department of Transportation
Design Division (Bridge)

MINIMUM ERECTION AND BRACING REQUIREMENTS

PRESTRESSED CONCRETE BEAM TYPES 48, 54, 60, 66 & 72

MEBR(C)-2(M)

FILE: mebstd02.dgn	DN: THD	CK: THD	DN: LW	CK: LDS	MEG: B112BM		
ORIG DATE: JULY 1995	DIST 15	FED REG 6	FEDERAL AID PROJECT #			SHEET 177	
REVISIONS	COUNTY BEXAR		CONTROL	SECT	JOB	HIGHWAY 1604	

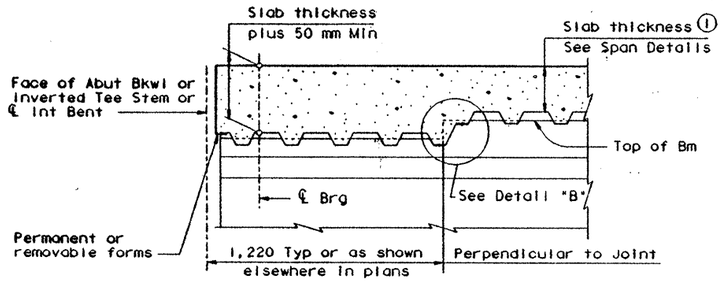

THICKENED SLAB END AT
ABUTMENT OR INTERIOR BENT

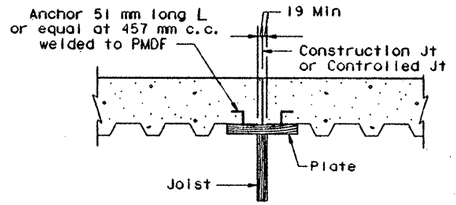

SECTION THRU CONSTRUCTION JOINT

Note: In spans where PMD forms are used, timber forms shall be used at construction joints.

Adequate provision shall be made to support edge of metal form and to provide anchorage of metal form to slab concrete where joined to wood forms.

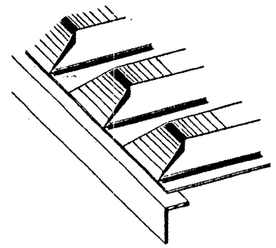

PRECLOSED

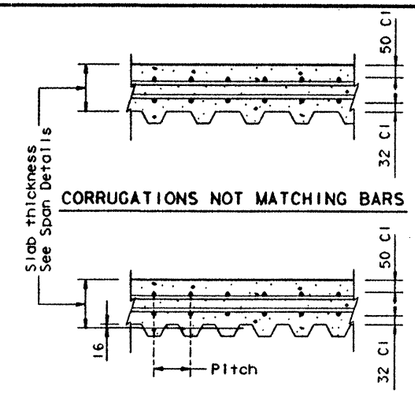

The Contractor has the option of furnishing either system, if practical.

TYPICAL LONGITUDINAL
SLAB SECTIONS

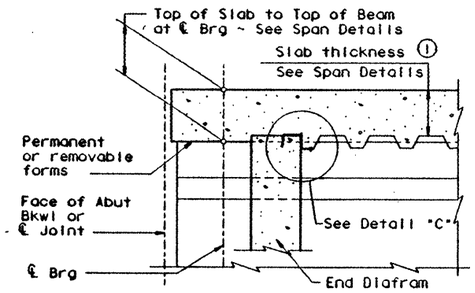

SLAB END WITH CONC END DIAF OPTION
AT ABUTMENT OR INTERIOR BENT

① Slab thickness minus 16 mm if corrugations match reinforcing bars

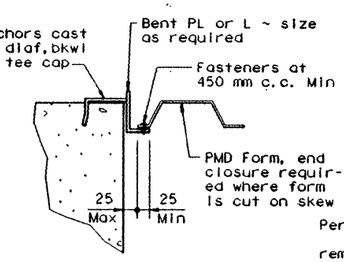

DETAIL "C"

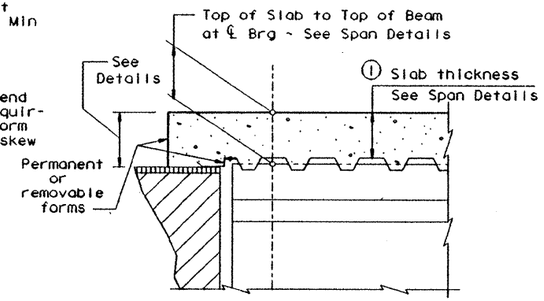

SECTION THRU SLAB OVER
ABUTMENT BACKWALL
OR INVERTED TEE STEM

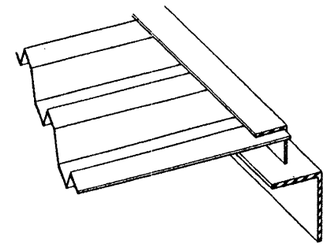

ANGLE HEADER

NOTE: This type is to be used for skewed ends only.

TYPES OF END CLOSURES

DETAILS AT BEAM ENDS

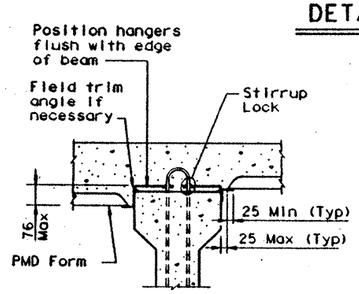

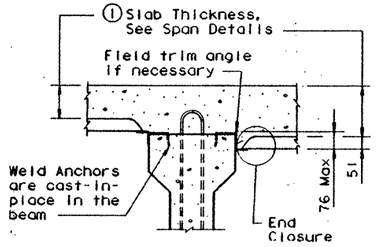

TYPICAL TRANSVERSE SECTIONS

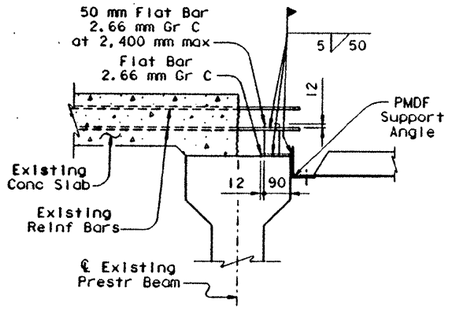

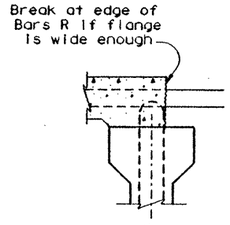

SECTION THRU BREAKBACK FOR WIDENING

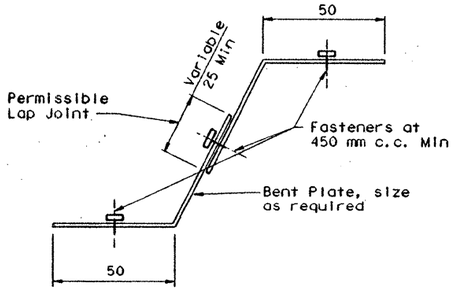

DETAIL "B"

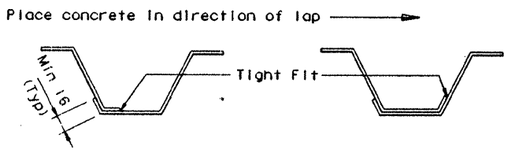

SIDE LAP DETAILS

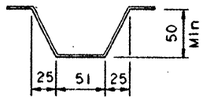

TYPICAL CORRUGATION

APPROXIMATE QUANTITIES FOR
ONE SQUARE METER OF SLAB
(for Contractors Information only)

Slab Thickness mm	Reinf Steel kg/m^2	Class S Concrete m^3/m^2
185	32.52	.2109
190	32.52	.2146
195	32.52	.2202
200	32.52	.2258
210	32.52	.2345

These approximate quantities are for a typical square meter of cast-in-place slab over the average PMDF with corrugations not matching bars. The quantities do not include an allowance for slab overhangs, thickened slab ends, or possible haunch over beams.

GENERAL NOTES:

Permenant Metal Deck Forms (PMDF) shall be designed for the dead load of form, reinforcement and concrete plus 244 kilograms per square meter for construction loads. The following allowable stresses shall be used in the design:

ASTM A446, Grade	Yield (MPa)	Allowable Stress (MPa)
A	227.5	164.8
B	255.1	184.8
C	275.8	199.9
D	344.7	248.2
E	551.6	248.2
Weld Metal		85.5

Maximum deflection under the weight of forms, reinforcement and concrete, or a minimum of 586 kilograms per square meter shall not exceed 1/180 of the form span or 13 mm, whichever is less. The design span for forms shall be clear distance between beam flanges measured parallel to the form flutes minus 51 mm. The minimum thickness of the forms shall be 0.76 mm and that of the support angles shall be 1.90 mm. All forms shall be securely fastened to supports.

All dimensions are in millimeters unless otherwise shown.

This Standard shall be used as a guide in the preparation of shop detail drawings.

Texas Department of Transportation
Design Division (Bridge)

PERMANENT METAL DECK FORMS (CONCRETE)

PMDF (C) (M)

FILE: mdfstd01.dgn	DN: THD	CK: THD	DW: LW	CK: LDS	STD: B488M
ORIG DATE: SEPTEMBER 1996	DIST 15	FED REG 6	FEDERAL AID PROJECT		SHEET 178
REVISIONS	COUNTY BEXAR		CONTROL	SECT	JOB HIGHWAY 1604

DISCLAIMER:
The use of this standard is governed by the "Texas Engineering Practice Act". No warranty of any kind is made by TxDOT for any purpose whatsoever. TxDOT assumes no responsibility for the conversion of this standard to other formats or for incorrect results or damages resulting from its use.

LEVELS DISPLAYED: 1 3 ACC: (LV=1,2 for English, 1,3 for Metric)

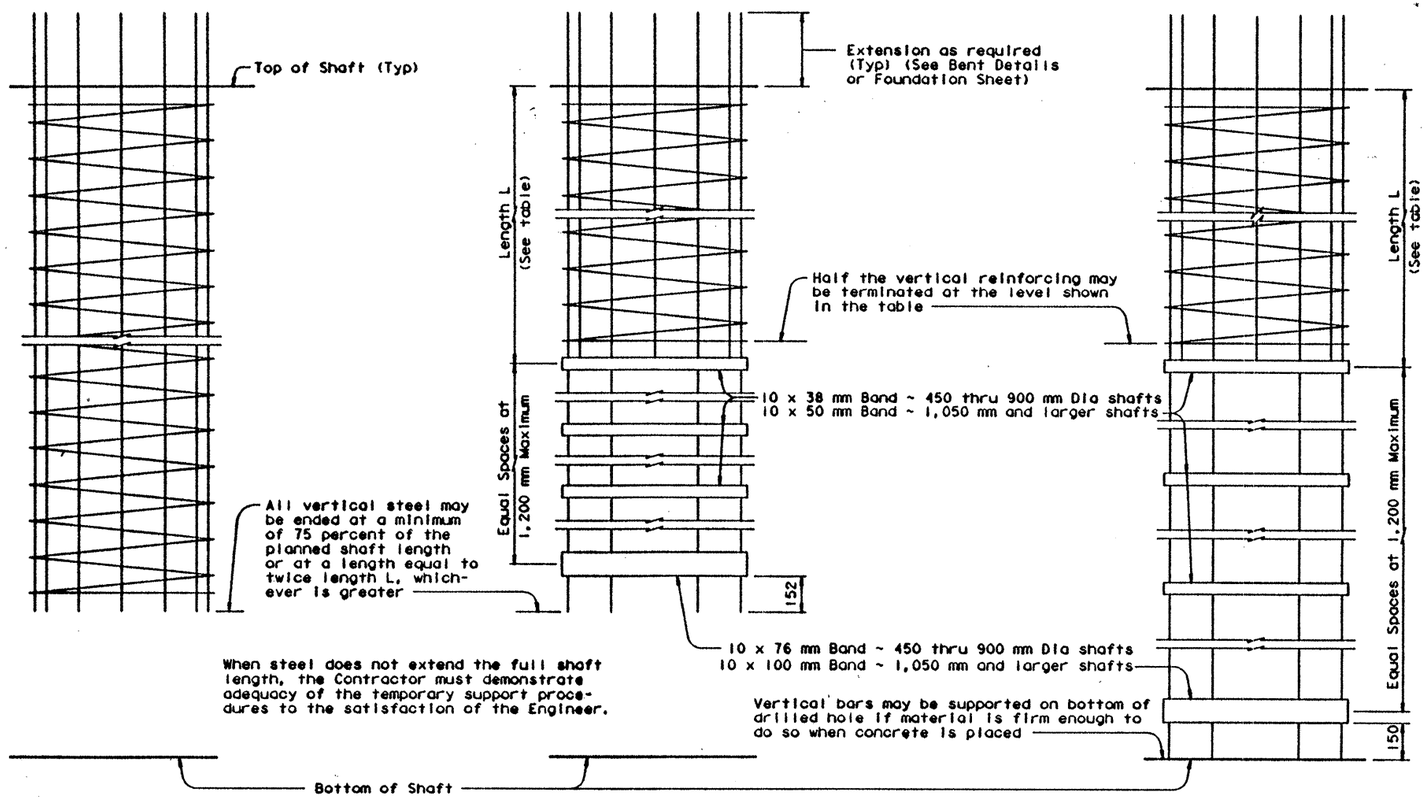

ELEVATIONS

LENGTH L		
Drilled Shaft Diameter	Length L	Note
(mm)	(mm)	The length L is measured from top of shaft, natural ground, or finished ground, whichever results in the longer length of full reinforcement.
450 & 600	7,300	
750 & 900	9,100	
1,050 & larger	10 Shaft Diameters	

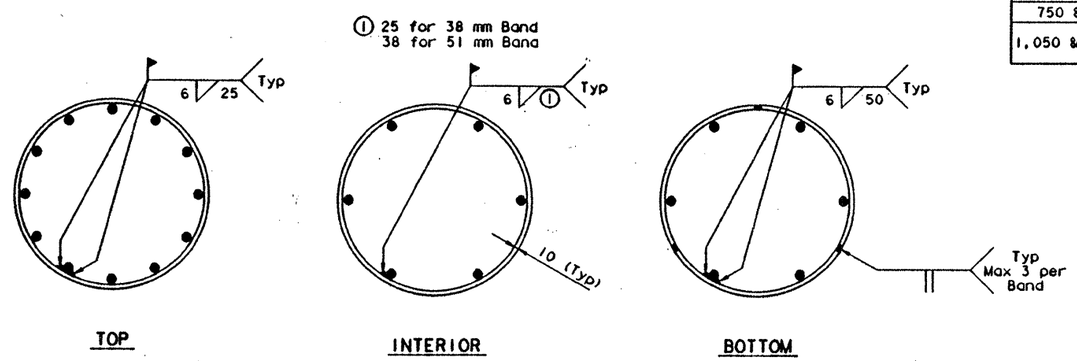

BAND DETAILS

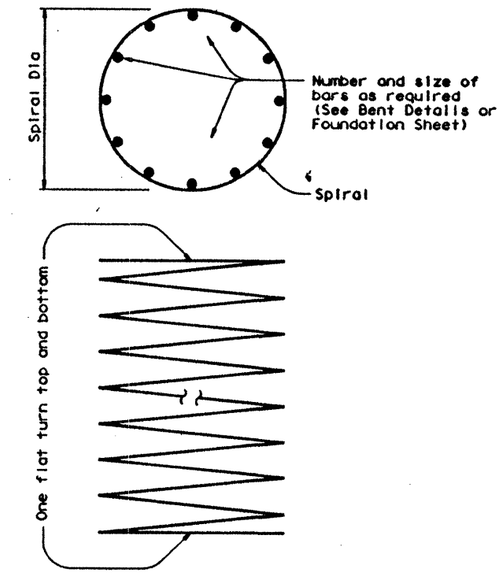

Spiral to be at the pitch and diameter as shown elsewhere in the plans.

SPIRAL DETAIL

GENERAL NOTES:

At the Contractor's option, any or all drilled shafts may be constructed using these details in lieu of the drilled shaft details shown elsewhere in the plans.

These details shall not be applied to single column bents supported by a single shaft, or to overhead sign bridge towers supported by a single shaft, or to high mast illumination pole foundations. Unless otherwise noted, all drilled shafts on stream crossings and any others specifically noted in the plans shall have full reinforcement and be excluded from applications of these details.

All welded bands and reinforcing steel, including that projecting the required amount from the top of the shaft, shall not be paid for directly, but shall be subsidiary to the bid item, "Drilled Shaft Foundations"

Tack welding of spiral to main steel will not be allowed in the upper 4,500 mm of drilled shaft.

All dimensions are in millimeters unless otherwise shown.

DISCLAIMER: The use of this standard is governed by the "Texas Engineering Practice Act". No warranty of any kind is made by TxDOT for any purpose whatsoever. TxDOT assumes no responsibility for the conversion of this standard to other formats or for incorrect results or damages resulting from its use.

ACC: (LV=1.2 for English; 1.3 for Metric)

LEVELS DISPLAYED: 1 3

Texas Department of Transportation
Design Division (Bridge)

OPTIONAL DRILLED SHAFT REINFORCING

ODSR(M)

FILE: odsrt001.dgn	DGN: THD	CK: GHO	DW: KC	CK: LDS	STD: BI09M	
ORIG DATE: February 1996	DIST 15	FED REG 6	FEDERAL AID PROJECT		SHEET 1-79	
REVISIONS	COUNTY BEXAR		CONTROL	SECT	JOB	HIGHWAY 1604

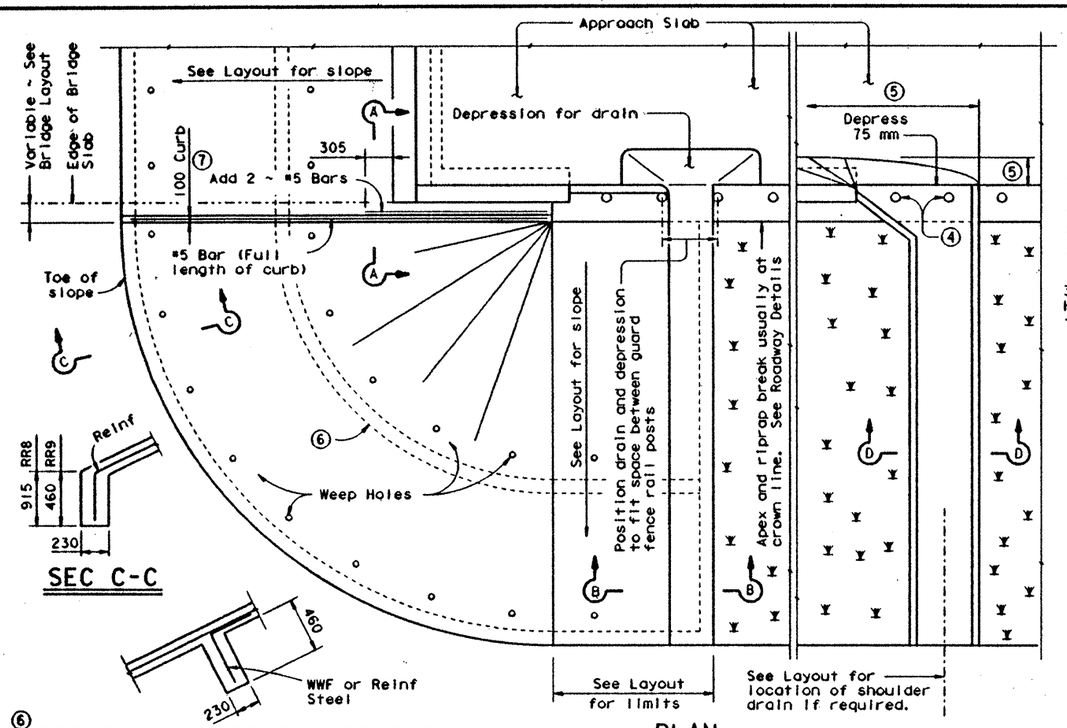

PLAN

SEC C-C

⑥ OPTIONAL INTERMEDIATE TOEWALL

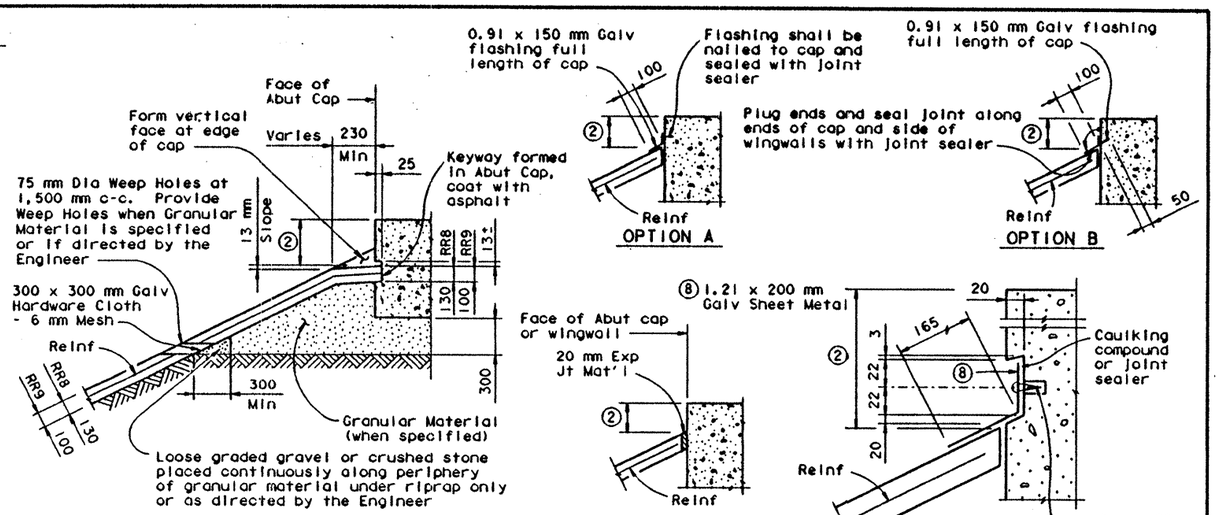

Note: The sealing option of the joint between the face of cap and riprap shall be as designated by the Engineer or as shown elsewhere on plans. Options A or C may be used at wingwalls in all cases.

SECTIONS THRU RIPRAP AT CAP

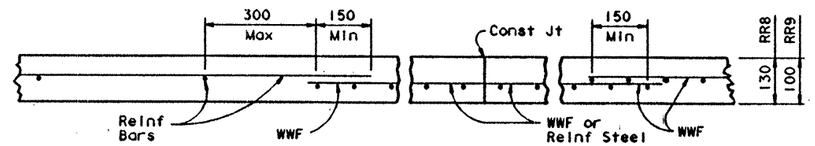

Note: Reinforcing bars shall be #3 at 450 mm spac c-c. Welded wire fabric shall be 152 x 152 - MW19 x MW19. Combinations of WWF and reinforcing bars may be used if both are permitted. Lap splices shall be a minimum of 150 mm, measured from the transverse wire of WWF, and the ends of reinforcing bars.

DETAILS OF WWF, REINF AND CONST JOINT

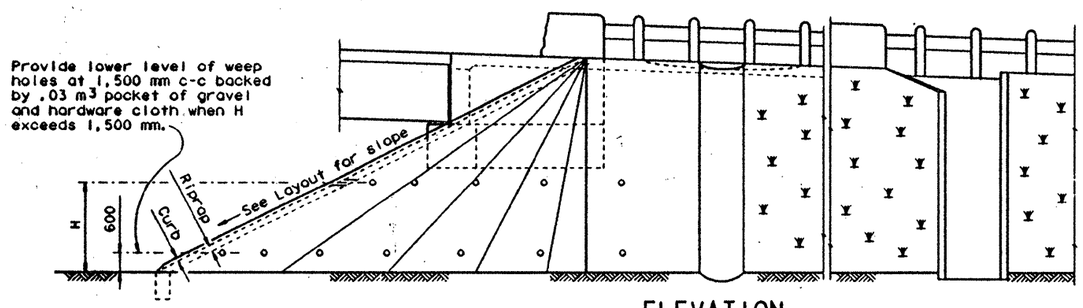

ELEVATION

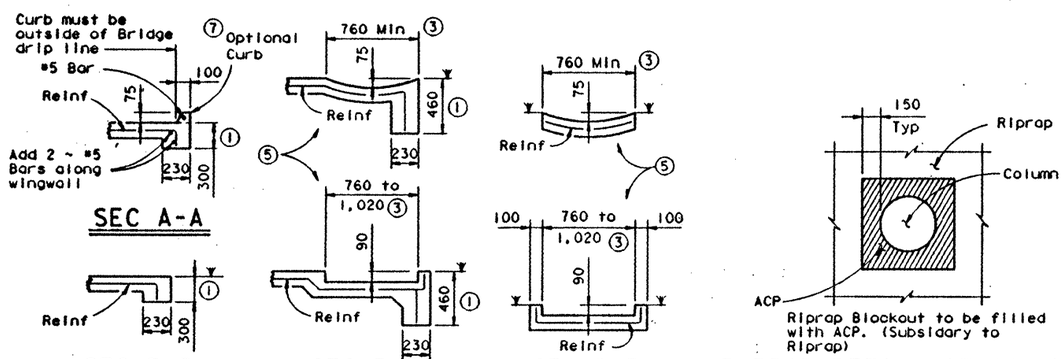

SEC A-A

SEC B-B (No Drain)

SEC B-B (With Drain)

SEC D-D (Shoulder Drain)

RIPRAP DETAIL AT COLUMNS (As directed by the Engineer)

① Wall extension may be reduced or modified if approved by the Engineer. Wall extension shall be increased to 460 mm whenever the optional intermediate Toewall is called for in the plans.

② Top of cap to top of riprap dimension varies as directed by the Engineer. Should be 230 mm Min for stringer type bridges and 460 mm for slab type bridges.

③ Wider or other drain configurations shall be used if shown elsewhere in plans or if directed by the Engineer.

④ A 300 mm Dia void should be provided in the riprap at the guard fence location. Backfill with 100 mm of ACP if directed by the Engineer.

⑤ Limits and configuration of drains and depressions shall be as shown elsewhere in plans or as directed by the Engineer.

⑥ The optional intermediate toe wall shall be constructed when designated elsewhere in the plans or included in the specifications.

⑦ When riprap is shown extended around header on layout, extend slab and toewall as shown and eliminate 100 mm curb.

FOR CONTRACTOR'S INFORMATION ONLY:
130 mm of RR8 = .130 m³/m²
100 mm of RR9 = .100 m³/m²
#3 Reinf at 450 mm c-c = 2.49 kg/m²
152 x 152 - MW19 x MW19 = 2.05 kg/m²

GENERAL NOTES

Concrete shall be Class B unless noted elsewhere in plans.

Reinforcing other than that shown may be used by substituting reinforcement of equal or greater unit cross-sectional area. The Maximum reinforcement spacing shall be 450 mm.

Construction joints or grooved joints extending the full slant slope height shall be at intervals of approximately 6,000 mm unless otherwise directed by the Engineer.

Porous Concrete Filter Blanket and Gravel Backfill shall be placed if shown elsewhere in the plans or if directed by the Engineer.

Hardware cloth, loose graded stone behind weep holes, flashing, or other sealing material shall not be paid for directly but shall be subsidiary to the bid item, Riprap.

Unless specified elsewhere in the plans to be only reinforcing bars, the riprap reinforcing may be composed of reinforcing bars, welded wire fabric, or any suitable combination of both types.

See Layout for limits of riprap.

RR8 is to be used on stream crossings.

RR9 is to be used on other embankments.

All dimensions are in millimeters unless otherwise shown.

DISCLAIMER: The use of this standard is governed by the "Texas Engineering Practice Act". No warranty of any kind is assumed by TxDOT for the accuracy of this standard, nor for the conversion of this standard to other formats or for incorrect results or damages resulting from its use.

Texas Department of Transportation
Design Division (Bridge)

CONCRETE RIPRAP FOR EMBANKMENT SLOPES UNDER BRIDGE ENDS (TYPES RR8 & RR9)

CRR (M)

FILE: crrstd01.dgn	DN: JJP	CK: THD	DW: DRG	CK: LDS	MSG: B202M
ORIG DATE: JULY 1995	DIST 15	FED REG 6	FEDERAL AID PROJECT		SHEET 180
REVISIONS	COUNTY BEXAR		CONTROL	SECT	JOB / HIGHWAY 1604

LEVELS DISPLAYED: 1 3

ACC: (LV=1.2 for English, 1.3 for Metric)

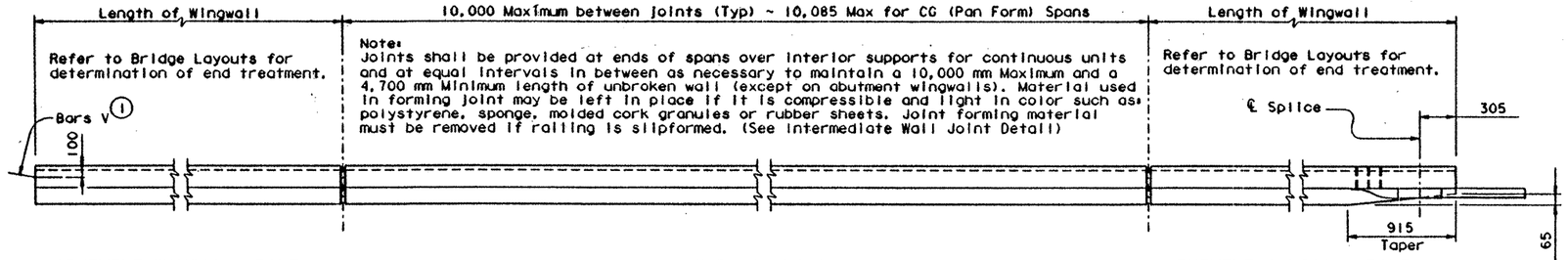

ABUTMENT WINGWALL PANEL
(Showing dowels for connection to approach Concrete Traffic Barrier)

TYPICAL PANEL

ABUTMENT WINGWALL PANEL
(Showing MBGF Attachment)

PLAN

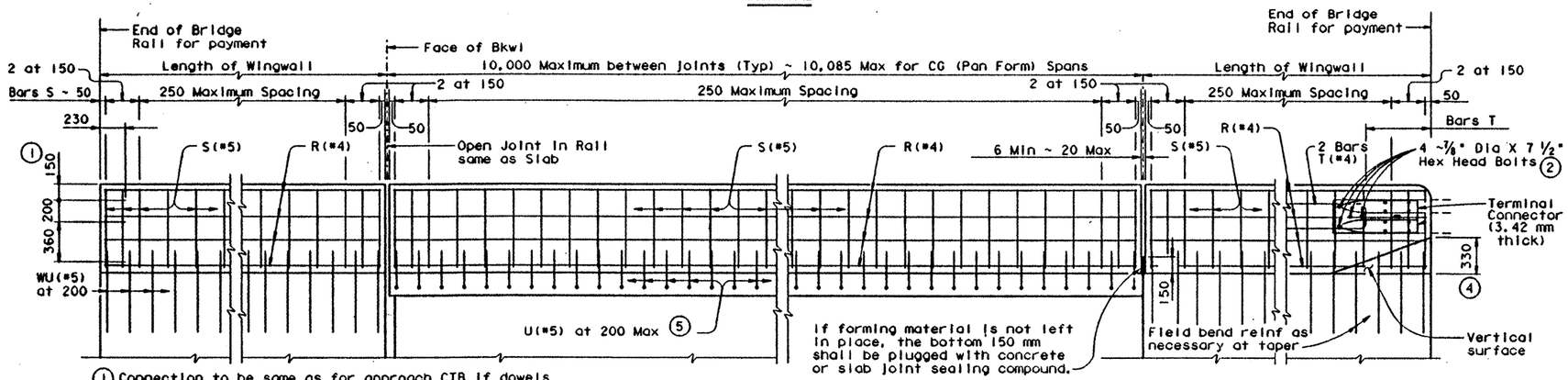

(1) Connection to be same as for approach CTB if dowels are not used.
(2) 1 3/4" Dia washer required under 7/8" Dia Bolt Heads and Nuts.
(4) Increase 50 mm for Structure with overlay
(5) For ACP Overlay exceeding 75 mm, reduced bar spacing may be required.

ROADWAY ELEVATION OF RAIL

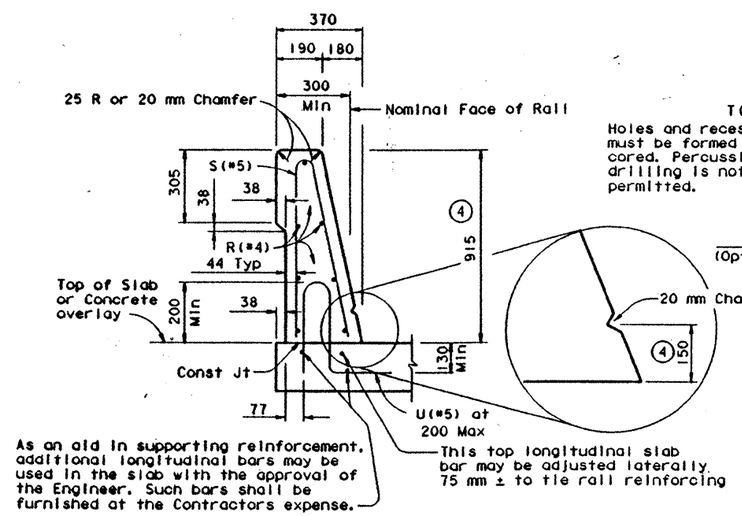

TYPICAL SECTION
(SHOWING CONVENTIONAL REINF)

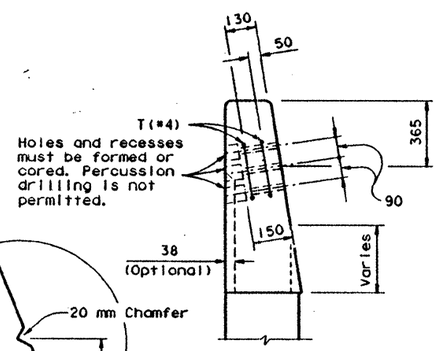

SECTION A-A

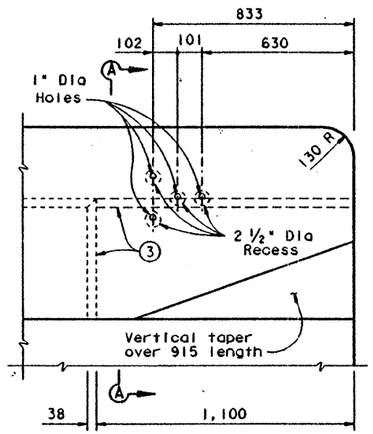

(3) Back offset may optionally be continued to end of railing.

END TREATMENT AT MBGF

GENERAL NOTES:

Designed according to current AASHTO Standard Specifications for Highway Bridges. Structurally evaluated to be equivalent or greater in strength to other safety-shape railings which have been crash tested to NCHRP Report 230 SL-2 criteria. Also equivalent to railings tested to 1989 AASHTO Guide Specification PL-2 criteria and Texas Transportation Institute research project No. 9429 CDK.

All parts of the railing including concrete parapet wall, reinforcing, terminal connector, bolts, nuts and washers are included in the price bid per linear meter of rail.

All steel components except reinforcing shall be galvanized unless otherwise shown in plans.

All concrete for railing wall shall be Class "C".

All reinforcing steel shall be grade 420.

Metal Beam Guard Fence or Concrete Traffic Barrier is usually attached to the abutment wingwall panel. See plan sheet for details and length for payment. The splice between the approach guard fence and the terminal connector shall be with the normal eight bolts. The dowel connection to the approach traffic barrier shall be grouted the same as other barrier joints.

Shop drawings will not be required for this rail.

This railing may be constructed with slip-forms when shown on the plans or approved by the Engineer, with equipment approved by the Engineer. Sensor control for both line and grade must be provided. When slip-forming is used, the concrete may be cured with membrane curing compound.

Additional reinforcing may be tack welded to the upper two thirds of the reinforcing cage to provide bracing when slip-forming is used. Additional anchorage devices may be added when welding is necessary in the lower one third of the cage. Do not weld to U or S bars in the lower one third of the cage.

The back of railing shall be vertical unless otherwise shown in the plans or approved by the Engineer. Deformed welded wire fabric may be used as an option to conventional reinforcement and shall be made in accordance with ASTM A497 (Deformed Wire).

Welded Wire Fabric Detail shown is for MD55. longitudinal wires and MD54 vertical wires. Combinations of Reinforcing Steel and Welded Wire Fabric or configurations of Welded Wire Fabric other than shown will be permitted when the conditions in the table are satisfied and the dimension from end of section to first welded vertical wire does not exceed 75 mm.

Epoxy coat bars U and WU if slab bars are epoxy coated.

All dimensions are in millimeters unless otherwise shown.

Average mass of railing (with no overlay) is 560 kg/m.

DISCLAIMER:
The use of this standard is governed by the "Texas Engineering Practice Act". No warranty of any kind is made by TxDOT for any purpose whatsoever. TxDOT assumes no responsibility for the conversion of this standard to other formats or for incorrect results or damages resulting from its use.

LEVELS DISPLAYED | ACC: | (LV=1,2 for English, 1,3 for Metric)

Sheet 1 of 2

Texas Department of Transportation
Design Division (Bridge)

SINGLE SLOPE TRAFFIC RAILING

TYPE SSTR(M)

FILE: rlstd037.dgn	DN: GHO	CK: THD	DW: TGG	CK: LDS	STD: B566M		
ORIG DATE: JANUARY 1996	DIST 15	FED REG 6	FEDERAL AID PROJECT #			SHEET 181	
REVISIONS	COUNTY BEXAR		CONTROL	SECT	JOB	HIGHWAY 1604	

2452-1-35

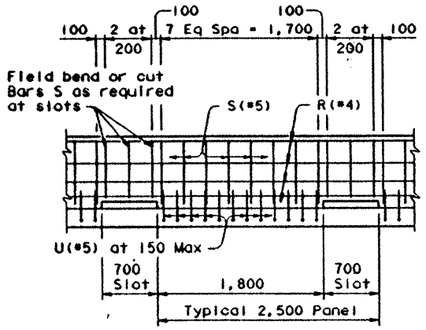

SIDE DRAIN DETAIL

Local Deck or Side Drains may be used where shown elsewhere on the plans or as directed by the Engineer. Modify Bars S as required. No drains should be placed over railroad tracks, lower roadways, or within 1,830 mm of the face of an adjacent bent cap.

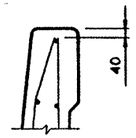

Bars S may be constructed as two separate bars at the contractors's option.

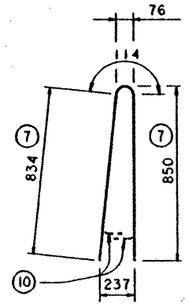

BARS S (#5)

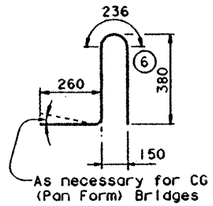

BARS U (#5)

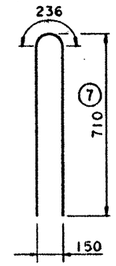

BARS WU (#5)

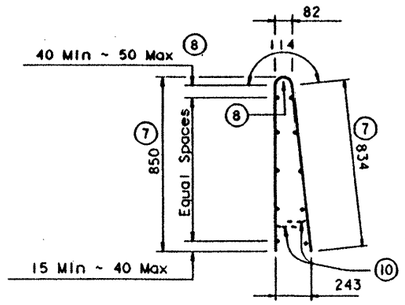

WELDED WIRE FABRIC
(OPTIONAL)

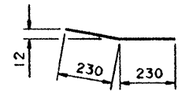

BARS V (#8)
(3 at each connection)

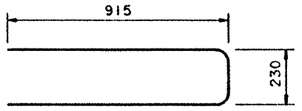

BARS T (#4)
(2 at each terminal)

(6) Increase to slab thickness plus 140 mm for slabs over 250 mm. Dimension given is permissible without increase for slabs 250 mm or less. Increase by nominal overlay thickness if over 50 mm.

(7) Dimension given is permissible for structures with up to 50 mm of overlay.

(8) No longitudinal wires may be within upper bend.

(9) Place additional #4 longitudinal bar (included as part of railing reinforcement) when U bars are embedded less than 130 mm.

(10) Bend or cut as required to clear drain slots.

DESCRIPTION	LONGITUDINAL WIRES	VERTICAL WIRES
Minimum (Cumulative Total) Wire Area	1,120 mm^2	640 mm^2/m
	No. of Wires	Spacing
Minimum	6	102
Maximum	11	305
Maximum Wire Size Differential	The smaller wire shall have an area of 40% or more of the larger wire.	

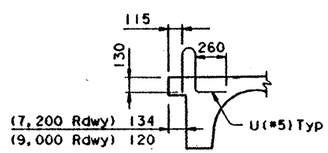

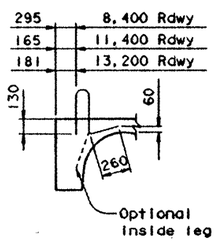

CG (PAN FORM) BRIDGES

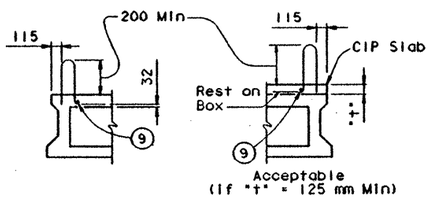

BOX BEAM

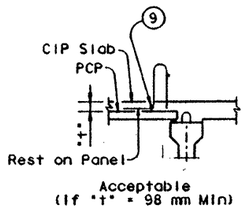

PRECAST PANELS

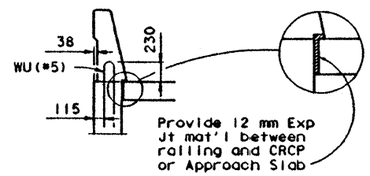

WINGWALLS AND CIP RETAINING WALLS

TYPICAL U AND WU BAR PLACEMENT

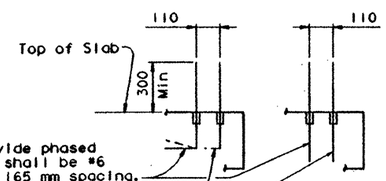

Threaded couplers may be used to provide phased installation of U and WU Bars. These shall be #6 Bars at 200 mm spacing or #5 Bars at 165 mm spacing.

Outside optional bars with couplers must have same bend as inside bars but spacing may be doubled (400 mm & 330 mm).

OPTIONAL BARS U(#6) OR WU(#6)

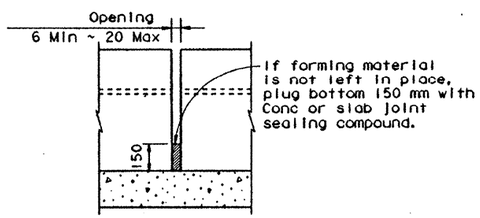

INTERMEDIATE
WALL JOINT DETAIL

Sheet 2 of 2

Texas Department of Transportation
Design Division (Bridge)

SINGLE SLOPE TRAFFIC RAILING

TYPE SSTR(M)

FILE: rlstd037.dgn	DN: GHO	CK: THD	DW: TGG	CK: LDS	STD: BS66M
ORIG DATE: JANUARY 1996	DIST 15	FED REG 6	FEDERAL AID PROJECT		SHEET 182
REVISIONS	COUNTY BEXAR		CONTROL	SECT	JOB 1604 HIGHWAY

2452-1-35

DISCLAIMER:
The use of this standard is governed by the "Texas Engineering Practice Act". No warranty of any kind is made by TxDOT for any purpose whatsoever. TxDOT assumes no responsibility for the conversion of this standard to other formats or for incorrect results or damages resulting from its use.

LEVELS DISPLAYED
ACC:
(LV=1.2 for English; 1.3 for Metric)

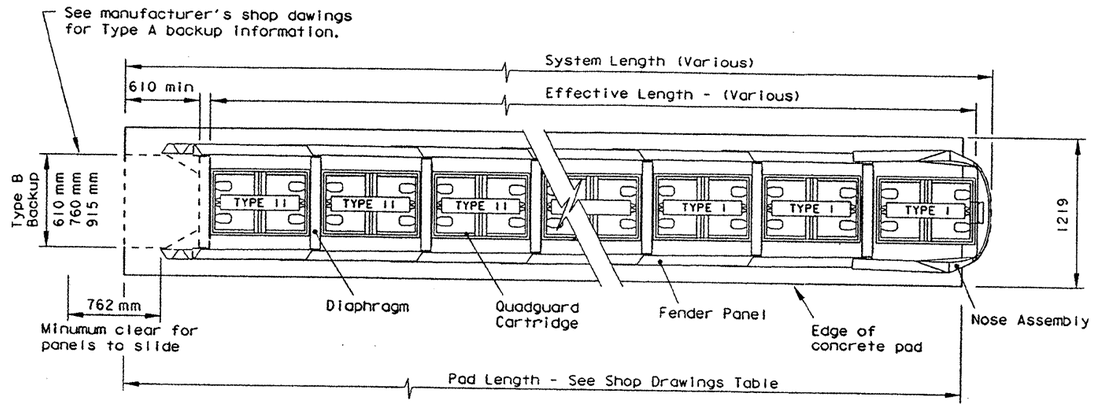

PLAN

TRAFFIC

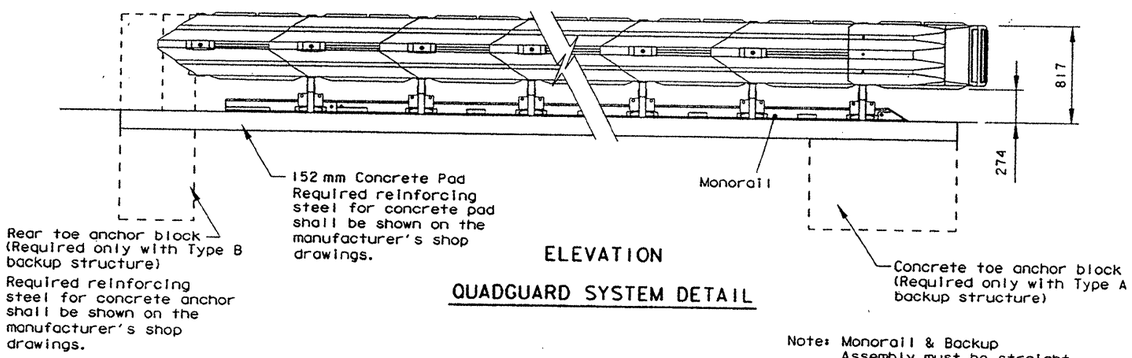

ELEVATION

QUADGUARD SYSTEM DETAIL

Note: Monorail & Backup Assembly must be straight within 13 mm.

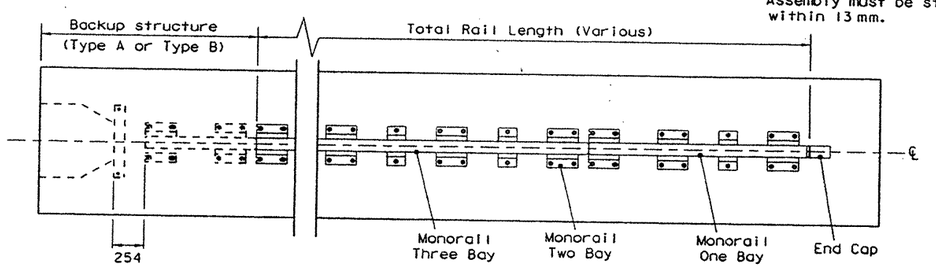

PLAN

TRAFFIC

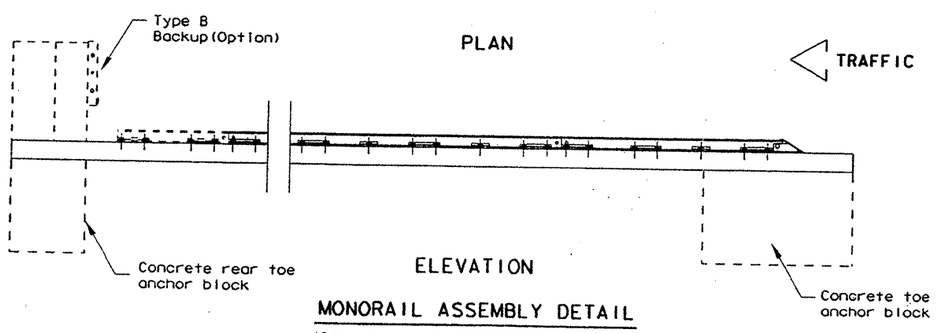

ELEVATION

MONORAIL ASSEMBLY DETAIL

(See the manufacture's shop drawings for monorail hardware installation.)

DESIGN SPEED (km/h)	NO. OF BAYS
60 OR LESS	2
70	3
80	4
90	5
100	6
110	8
120	10

Additional bays may be added if special considerations warrant and site conditions will accommodate additional length.

QUAD units are available in 610 mm, 760 mm, or 915 mm widths to 12 bays. Unit width, number of bays, and backup type shall be specified elsewhere in the plans.

GENERAL NOTES

1. For bi-directional traffic, appropriate transition panels will be required.
2. Details of components for the QUAD and backups and reinforcing details will be shown on the manufacturer's shop drawings furnished to the Engineer.
3. Concrete shall be class "S" with a minimum compressive strength of 28 MPa.
4. If the cross-slope varies more than 2% over the length of the system, the concrete pad will require levelling. Maximum permissible cross-slope is 8%.
5. The installation area should be free from curbs, elevated objects, or depressions.
6. The QUAD system should be approximately parallel with the barrier or ℄ of merging barriers.
7. Unit width selected should be adequate to protect an errant vehicle travelling at 15 degrees to the roadway from the face or corner of the fixed object.
8. For the permanent steel backup, (Type A) the distance between the face of backup and the barrier wall should not exceed 255 mm in any case.

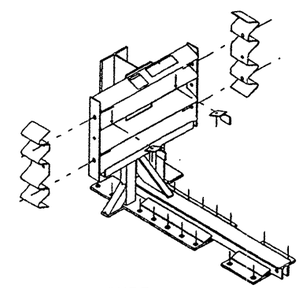

TYPE A
TENSION STRUT BACKUP

TENSION STRUT: Consists of diagonal struts, connections, and accessories, as detailed by the Manufacturer, located at the rear of the QUAD unit. Typical application is for QUAD units attached to double-face guardrail. When used, a 1219 mm x 1219 mm x 914 mm concrete toe anchor block shall be provided beneath the front portion of the concrete pad, except where the QUAD unit is to be placed on continuously reinforced concrete pavement or bridge deck (178 mm minimum, 28 MPa) or non-reinforced concrete pavement (203 mm minimum, 28 MPa)

TYPE CZ
CONSTRUCTION ZONE UNIT

CONSTRUCTION ZONE UNIT: Details for the components will be included on the manufacturer's shop drawings furnished to the Engineer.

"W"	"A"
610 mm	140 mm
762 mm	152 mm
914 mm	191 mm

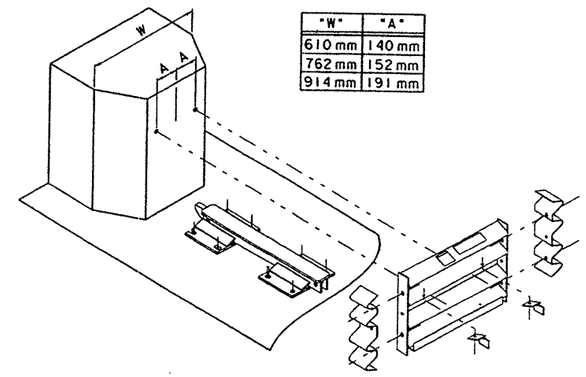

TYPE B
CONCRETE BACKUP

CAST-IN-PLACE CONCRETE WALL BACKUP: If cast-in-place structures such as bridge parapets, columns, or special walls are used as backup structures, then intermediate walls shall be provided between the structures and the QUAD unit. Intermediate walls shall be equal in height and width to the QUAD unit and reinforced with a steel cage. A cast-in-place transition section from concrete barrier may be used. Reinforcing steel should transition from the standard barrier section to the standard backup section. Details for the intermediate walls, cast-in-place transition sections, or other modifications will be shown elsewhere in the plans. Concrete wall backups may be used on continuously reinforced concrete pavement pavement or bridge deck (178 mm minimum, 28 MPa) or non-reinforced concrete pavement (203 mm minimum, 28 MPa) in those cases, all vertical steel will be dowled (127 mm minimum) into existing decks or located and placed prior to pouring proposed decks as approved by the Engineer.

Anchorage requirements are as follows:

WITH FOUNDATION TYPE:	ANCHOR WITH:
Minimum 150 mm portland cement concrete pad	MP-3 polyester anchoring system with 180 mm studs, 140 mm embedment
Minimum 75 mm asphaltic concrete over minimum 75 mm portland cement concrete	MP-3 polyester anchoring system with 460 mm studs, 420 mm embedment
Minimum 150 mm asphaltic concrete over minimum 150 mm compacted base	MP-3 polyester anchoring system with 460 mm studs, 420 mm embedment
Minimum 200 mm asphaltic concrete	MP-3 polyester anchoring system with 460 mm studs, 420 mm embedment

If the unit is anchored to asphaltic concrete, it should be relocated to fresh, undisturbed asphalt and re-anchored after each impact to ensure adequate future performance. A zero clearance between the backup and barrier wall is recommended in no case should this distance exceed 180 mm.

Texas Department of Transportation
Design Division (Roadway)

QUADGUARD SYSTEM

QUAD-97 (M)

FILE: quad97m.dgn	DN: MAM	CK: MAM	DW: BGD	CK:	NEG:	
ORIG DATE: SEPTEMBER 1996	DIST	FED REG	PROJECT			SHEET
REVISIONS	15	6	CD 2452-1-35			183
	COUNTY		CONTROL	SECT	JOB	HIGHWAY
	BEXAR		2452	01		

DISCLAIMER:
The use of this standard is governed by the "Texas Engineering Practice Act". No warranty of any kind is made by TxDOT for any purpose whatsoever. TxDOT assumes no responsibility for the conversion of this standard to other formats or for incorrect results or damages resulting from its use.

LEVELS DISPLAYED

NOTE:

SEE SHEET 248 FOR ILLUMINATION LAYOUT

(W) SEE SHEET 317 FOR ISLAND/WHEEL CHAIR RAMP DETAILS

SEE SHEETS 24 & 25 FOR HORIZONTAL GEOMETRY

SEE SHEETS 308 & 309 FOR TRAFFIC SIGNAL DETAILS

SEE SHEET 350 FOR PAVEMENT MARKING DETAILS

SEE SHEET 15 FOR ISLAND QUANTITY

SEE SHEET 107 FOR CONCRETE SIDEWALK WHEELCHAIR RAMP

TYPICAL CURB FLARE DETAIL

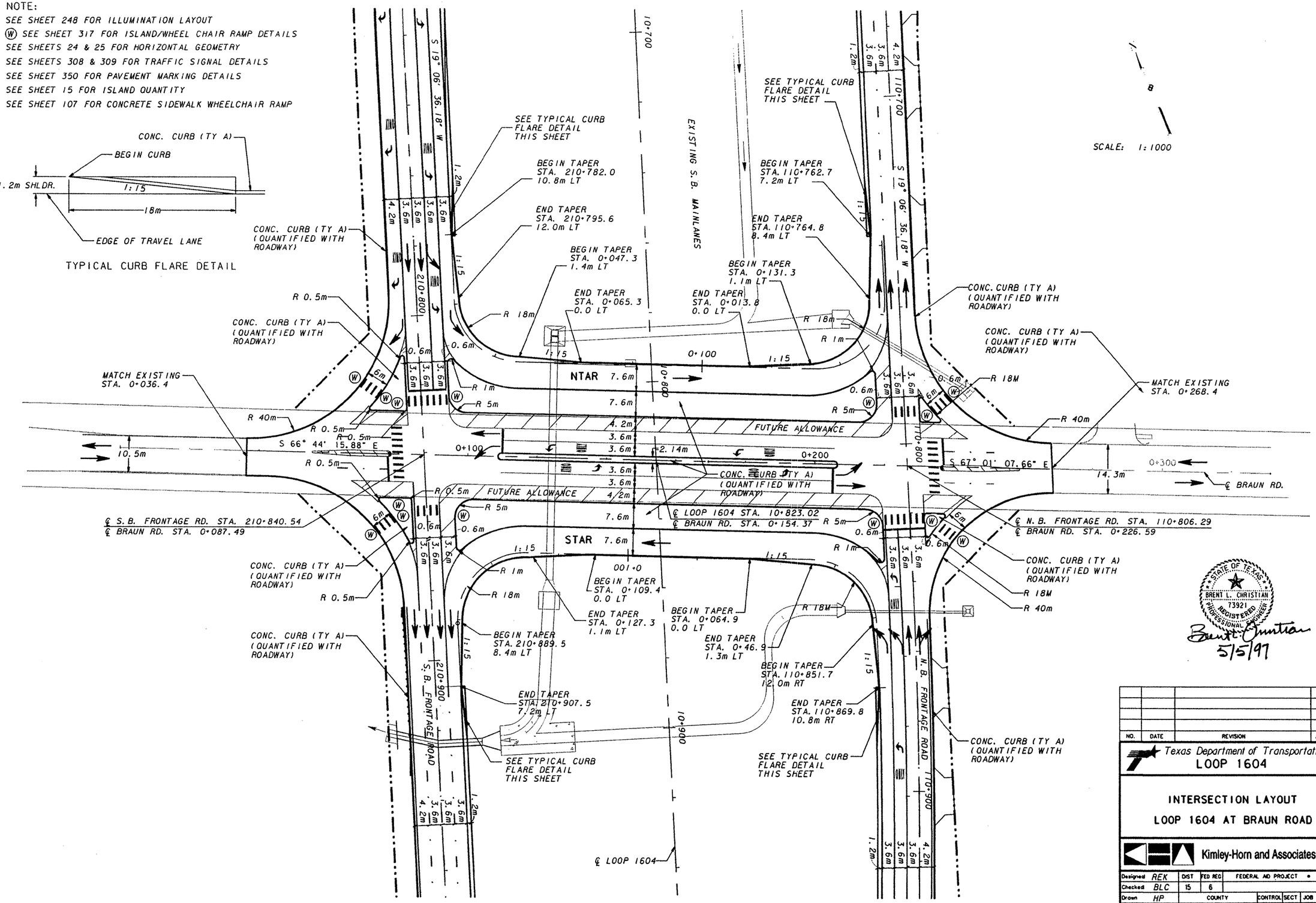

STATE OF TEXAS
BRENT L. CHRISTIAN
73921
REGISTERED PROFESSIONAL ENGINEER
5/5/97

NO.	DATE	REVISION	APPROV.

Texas Department of Transportation
LOOP 1604

INTERSECTION LAYOUT

LOOP 1604 AT BRAUN ROAD

Kimley-Horn and Associates, Inc.

Designed	REK	DIST	FED REG	FEDERAL AID PROJECT				HIGHWAY
Checked	BLC	15	6					LP1604
Drawn	HP	COUNTY		CONTROL	SECT	JOB		SHEET
Checked	GDG	BEXAR		2452	01	035		184

LEVELS DISPLAYED

1	2	3	4	5	6	7	8	9	10	11	12	13	14	15	16	17	18	19	20	21	22	23	24	25	26	27	28	29	30	31	32
33	34	35	36	37	38	39	40	41	42	43	44	45	46	47	48	49	50	51	52	53	54	55	56	57	58	59	60	61	62		

H:\DRAWINGS\67316031\30\604RL101.DGN

SCALE: 1:1500

NOTE:
SEE SHEET 317 FOR WHEELCHAIR RAMP DETAILS
SEE SHEETS 24 & 25 FOR HORIZONTAL GEOMETRY
SEE SHEET 312 FOR TRAFFIC SIGNAL DETAILS
SEE SHEET 352 FOR PAVEMENT MARKING DETAILS
SEE SHEETS 17-23 FOR LOOP 1604 ROADWAY PLAN
SEE SHEET 109 FOR CONCRETE SIDEWALK QUANTITIES

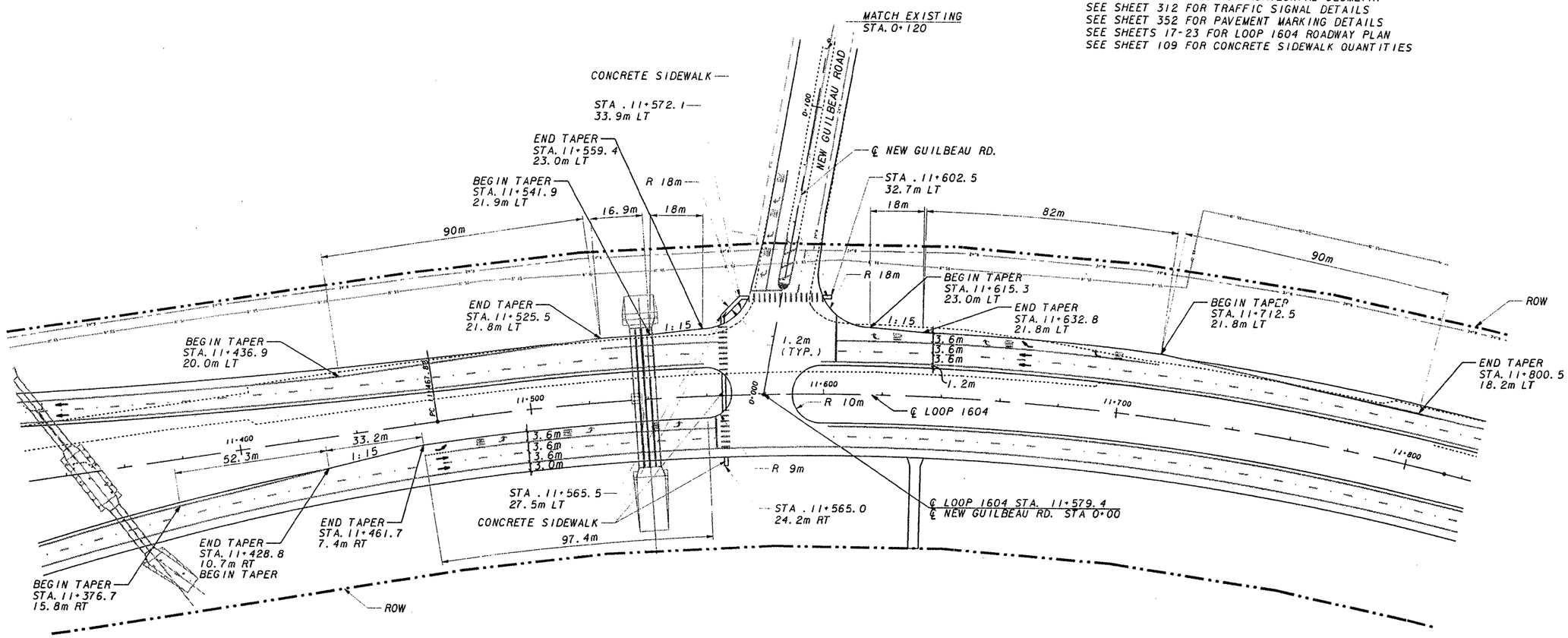

NO.	DATE	REVISION	APPROV.

Texas Department of Transportation
LOOP 1604

INTERSECTION LAYOUT
LOOP 1604 AT NEW GUILBEAU

Kimley-Horn and Associates, Inc.

STATE OF TEXAS
BRENT L. CHRISTIAN
73921
REGISTERED PROFESSIONAL ENGINEER
Brent L. Christian
5/5/97

Designed	HP	DIST	FED REG	FEDERAL AID PROJECT			HIGHWAY
Checked	JJ	15	6				LP1604
Drawn	HP	COUNTY		CONTROL	SECT	JOB	SHEET
Checked	GDG	BEXAR		2452	01	035	185

LEVELS DISPLAYED																	
1		3	4	5	6	7	8	9	10	11	12	13	14	15	16		
17	18	19	20	21	22	23	24	25	26	27	28	29	30	31	32		
33	34	35	36	37	38	39	40	41	42	43	44	45	46	47	48		
			53	54	55	56	57	58	59	60	61	62	63				

H:\DRAWINGS\673160 3\30\PNEWGUIL.DGN

NOTE:

SEE SHEET 24-25 FOR HORIZONTAL GEOMETRY
SEE SHEET 353 FOR PAVEMENT MARKING DETAILS
SEE SHEET 17-23 FOR LOOP 1604 ROADWAY PLAN
SEE SHEET 15 FOR ISLAND QUANTITY

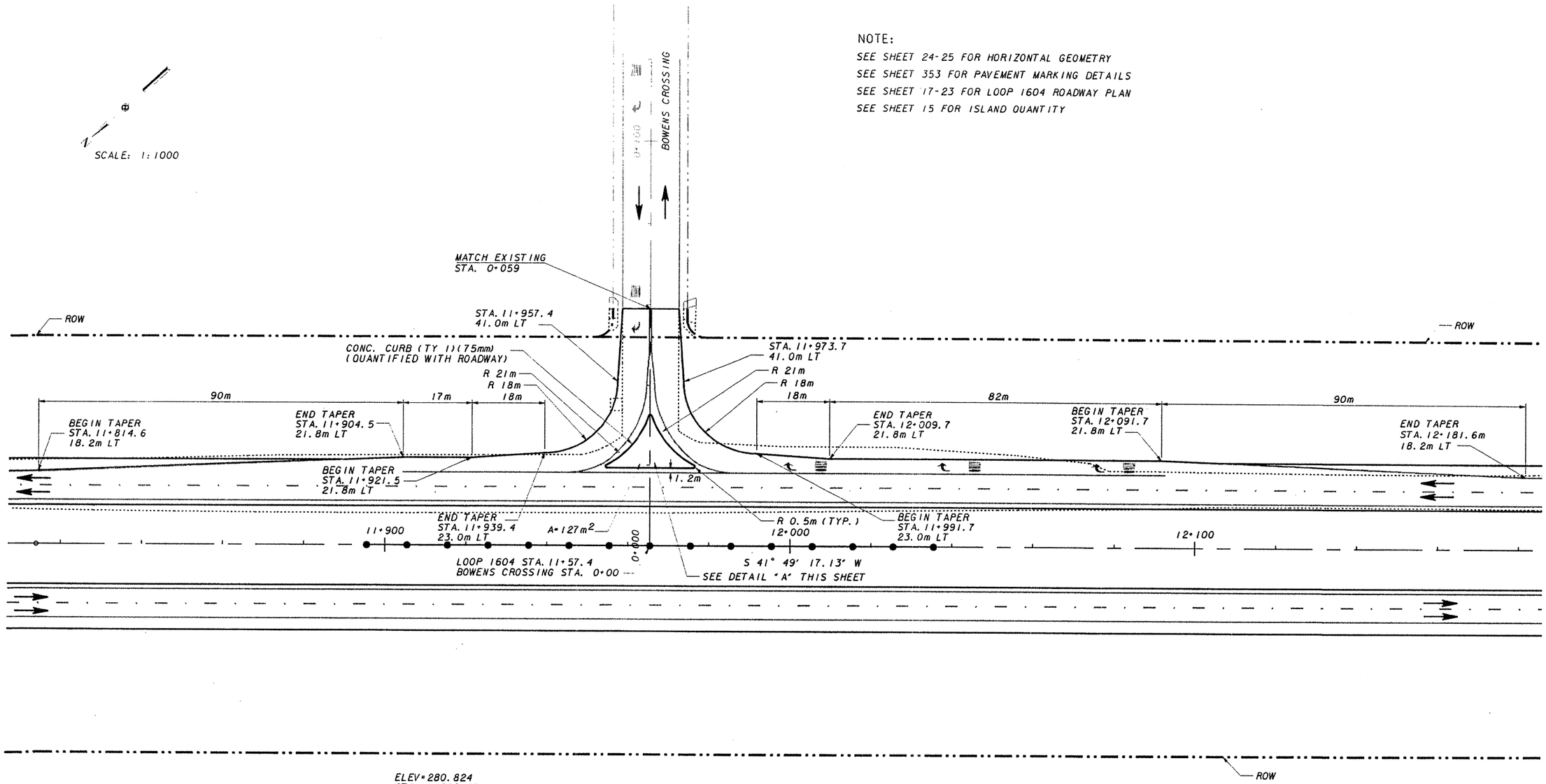

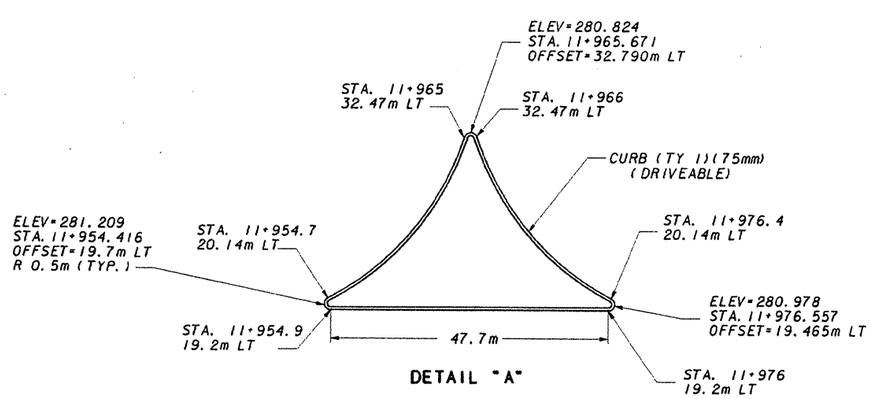

DETAIL "A"

NO.	DATE	REVISION	APPROV.

Texas Department of Transportation
LOOP 1604

INTERSECTION LAYOUT
LOOP 1604 AT BOWENS CROSSING

STATE OF TEXAS
BRENT L. CHRISTIAN
73921
REGISTERED
PROFESSIONAL ENGINEER
5/5/97

Kimley-Horn and Associates, Inc.

		DIST	FED REG	FEDERAL AID PROJECT			HIGHWAY
Designed	REK	15	6				LP1604
Checked	GDG	COUNTY		CONTROL	SECT	JOB	SHEET
Drawn	HP	BEXAR		2452	01	035	186
Checked	GDG						

LEVELS DISPLAYED

H:\DRAWINGS\67316031\30\PBOWENS.DGN

SCALE: 1:1500

NOTE:
SEE SHEETS 24 & 25 FOR HORIZONTAL GEOMETRY
SEE SHEET 357 FOR PAVEMENT MARKING DETAILS
SEE SHEETS 17-23 FOR LOOP 1604 ROADWAY PLAN

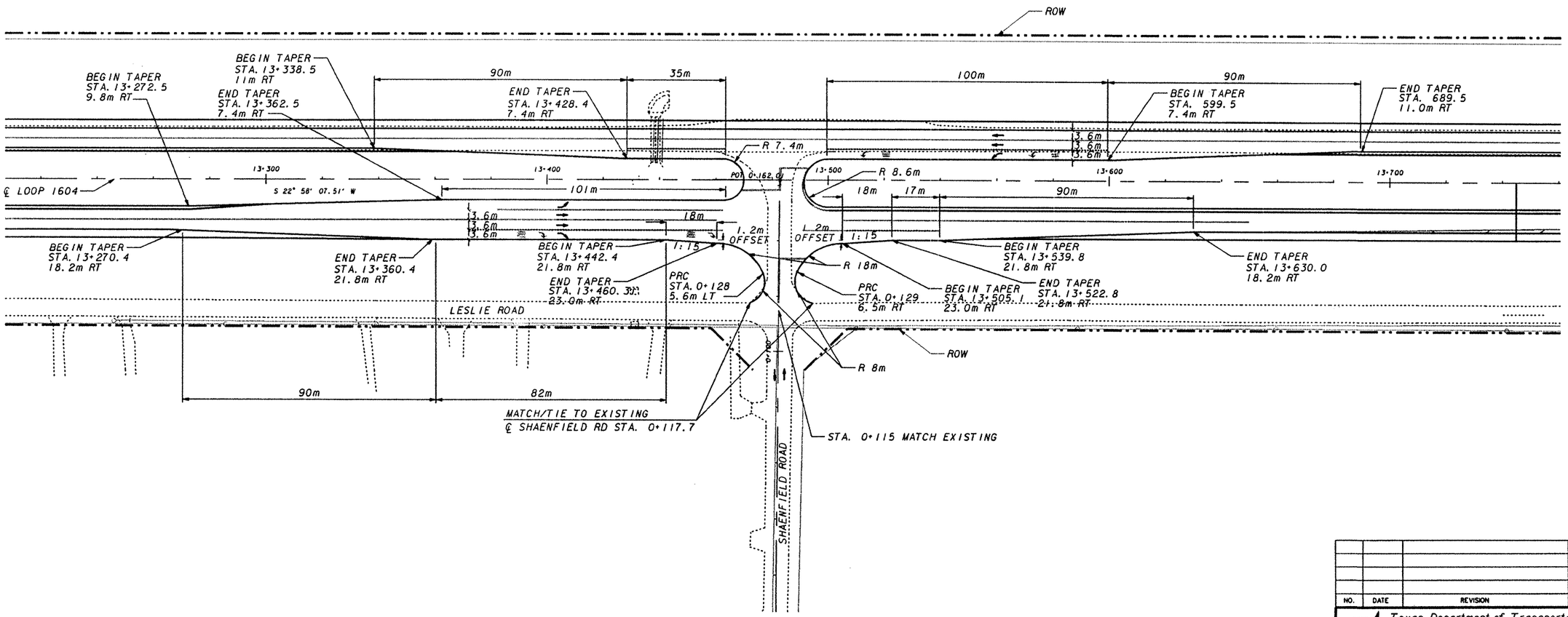

LEVELS DISPLAYED															
1	2	3	4	5	6	7	8	9	10	11	12	13	14	15	16
17	18	19	20	21	22	23	24	25	26	27	28	29	30	31	32
33	34	35	36	37	38	39	40	41	42	43	44	45	46	47	48
49	50	51	52	53	54	55	56	57	58	59	60	61	62	63	

H:\DRAWINGS\67316031\30\SHAENFLD.DGN

NO.	DATE	REVISION	APPROV.

Texas Department of Transportation
LOOP 1604

INTERSECTION LAYOUT

LOOP 1604 AT SHAENFIELD ROAD

STATE OF TEXAS
BRENT L. CHRISTIAN
73921
REGISTERED PROFESSIONAL ENGINEER

Brent L. Christian
5/5/97

Kimley-Horn and Associates, Inc.

Designed	REK	DIST	FED REG	FEDERAL AID PROJECT					HIGHWAY
Checked	BLC	15	6						LP1604
Drawn	HP	COUNTY			CONTROL	SECT	JOB		SHEET
Checked	BLC	BEXAR			2452	01	035		187

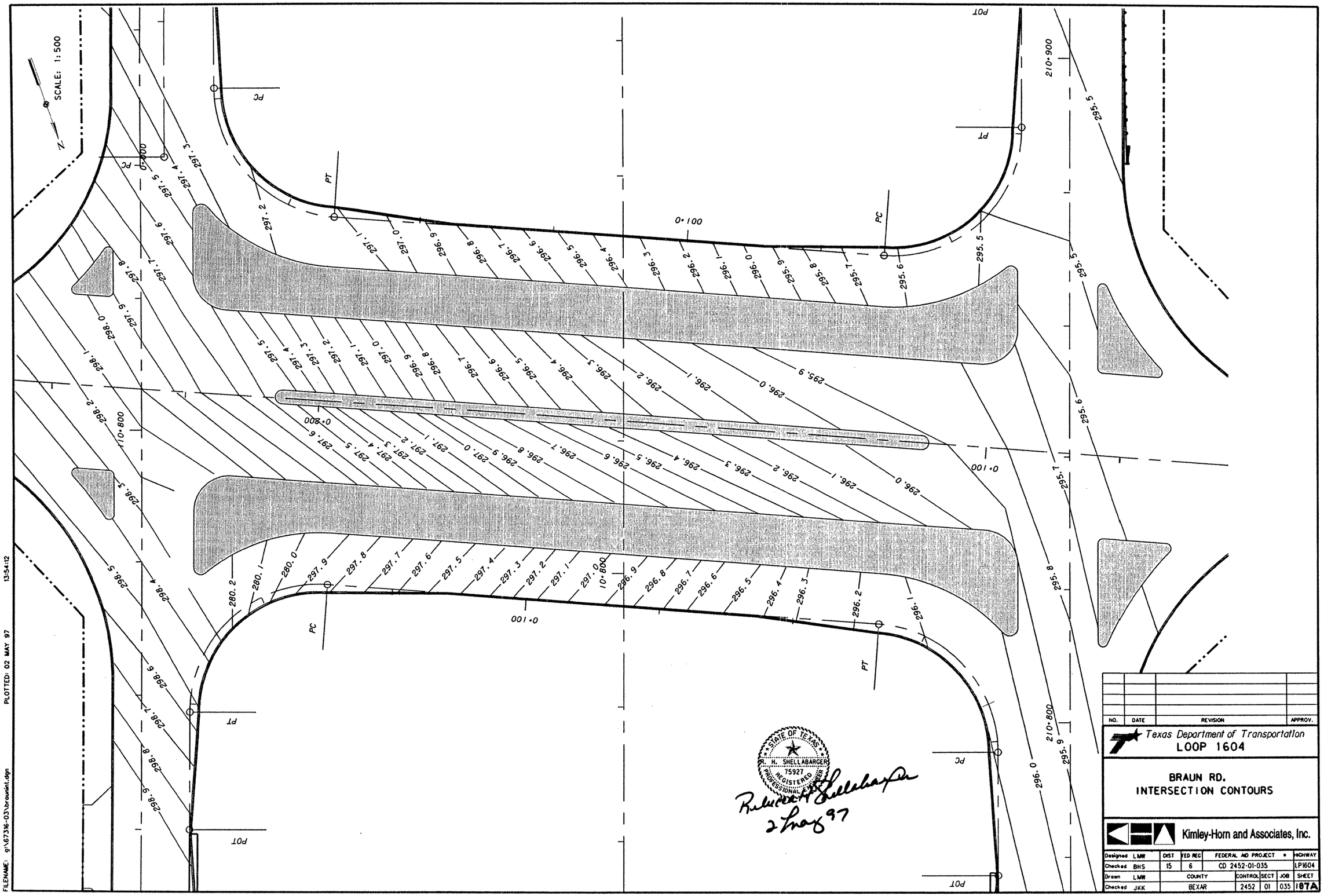

NO.	DATE	REVISION	APPROV.

Texas Department of Transportation
LOOP 1604

BRAUN RD.
INTERSECTION CONTOURS

Kimley-Horn and Associates, Inc.

Designed	LMW	DIST	FED REG	FEDERAL AID PROJECT				HIGHWAY
Checked	BHS	15	6	CD 2452-01-035				LP1604
Drawn	LMW	COUNTY		CONTROL	SECT	JOB		SHEET
Checked	JKK	BEXAR		2452	01	035		187A

DA No.	STRUCTURE No.	STATION	DA (ha.)	EXISTING STRUCTURES	PROPOSED STRUCTURES	T/C min.	"C" or "CW"	i_{10} mm/hr.	i_{50} mm/hr.	i_{100} mm/hr.	Q_{10} m^3/s	Q_{50} m^3/s	Q_{100} m^3/s
1	No.1	10+341.5	23.7	2-1200mm RCP	2-2100mm X 1200mm MBC	34	0.8	108	140	155	5.69	7.37	8.16
2	No.2	10+900	15.9 (2)	1-1800x1200 SC	1-1800mm X 1500mm SBC	20	0.7	147	189	211	4.54	5.84	6.52
3	No.3	11+347	23.0	2-1200mm CMP	2-1800mm X 1200mm MBC	33	0.8	110	142	158	5.62	7.26	8.08
4	No.4	11+539	42.4	2-1500x1200 MC	4-1500mm X 1200mm MBC	32	0.8	112	145	161	10.55	13.66	15.17
5	Bridge	12+424	7589	Pan & Girder Bridge	(3)	–	–	–	–	–	498 (4)	765 (4)	883 (4)
6	No.6	13+435	67.3	2-1500x900 MC	6-1500 X 900mm MBC	46	0.8	89	116	129	13.31	17.35	19.29
7	No.7	13+804.5	3.3	1-600mm CMP	1-900mm RCP	10	0.6	205	261	292	1.13	1.44	1.61
8	(5) No.8	11+950	6.6	–	–	20	0.8	147	189	211	2.16	2.77	3.09

1. DRAINAGE AREA AND RELATED STRUCTURES HAVE SAME IDENTIFICATION
2. DRAINAGE AREA FOR STRUCTURE NO.2 INCLUDES DRAINAGE AREA'S 2-A THRU 2-I. SEE INTERIOR DRAINAGE MAP FOR ADDITIONAL DETAILS.
3. 54m (3-18M) PRE STRESSED CONCRETE BEAM UNIT
4. FLOW FROM DRAINAGE STUDY AS PREPARED BY PAPE-DAWSON FOR THE CITY SAN ANTONIO TO BE SUBMITTED TO FEMA. FLOW IS BASED ON A HEC 1 ANALYSIS.
5. DRAINAGE AREA NO.8 IS FOR CHANNEL ALONG 1604 THAT DRAINS TO EXISTING CULVERT UNDER BOWENS CROSSING.

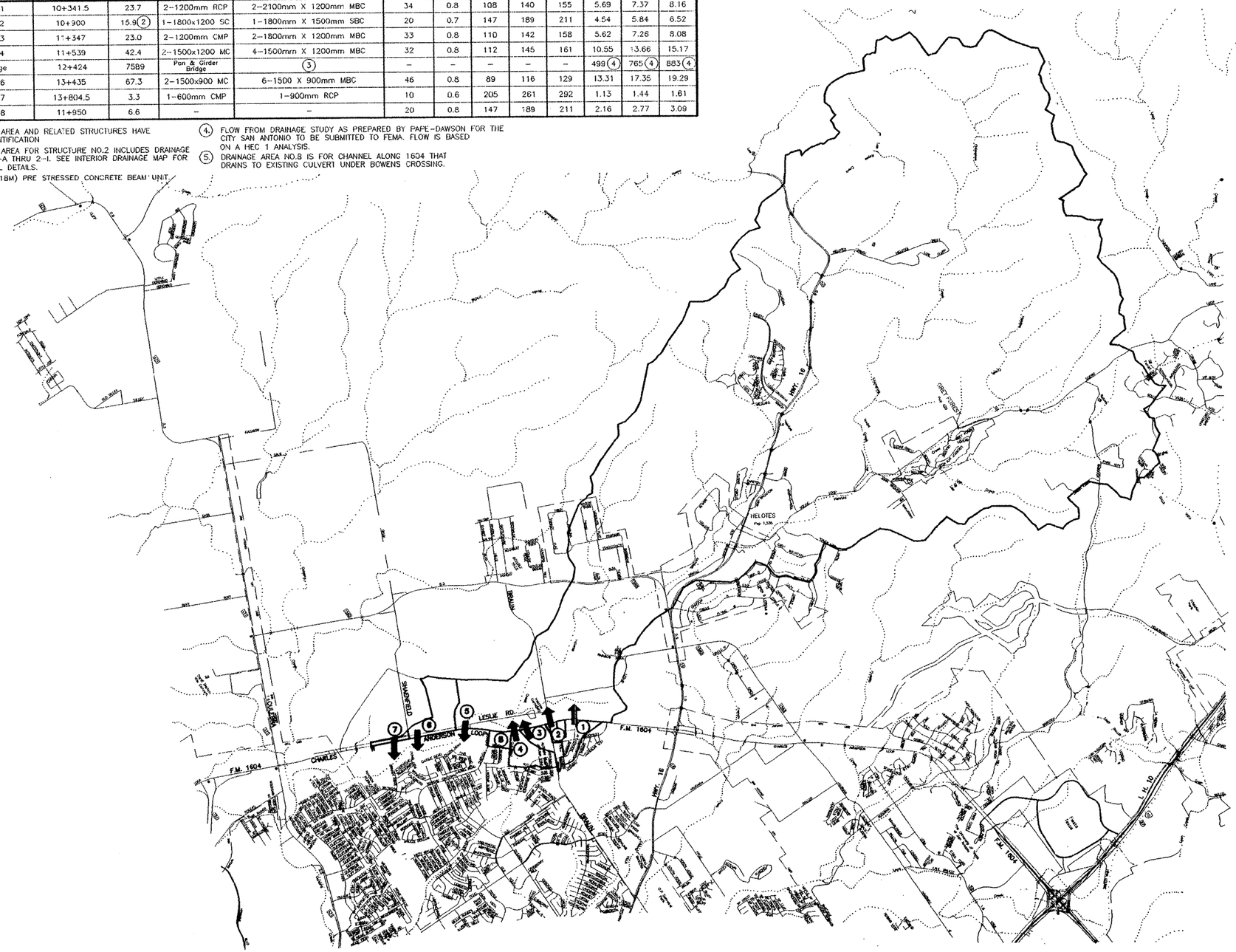

SCALE: 1:80,000m

STATE OF TEXAS
CARL BAIN
56996
REGISTERED PROFESSIONAL ENGINEER

The seal appearing on this document was authorized by Carl Bain P.E. 56996, on MAY 2, 1997

NO.	DATE	REVISION	APPROV.

Texas Department of Transportation

LOOP 1604

EXTERIOR DRAINAGE AREA MAP

BAIN MEDINA BAIN, INC.
ENGINEERS & SURVEYORS
San Antonio, Texas

Designed	DIST.	FED REG	FEDERAL AID PROJECT			HIGHWAY
Checked	15	6	STP 96 ( ) MM			LP1604
Drawn	COUNTY		CONTROL	SECT	JOB	SHEET
Checked	BEXAR		2452	01	035	188

1 OF 2

1604EDA.DWG PLOTTING SCALE: 1000=80,000
DATE: 04-11-97

DA No.	STRUCTURE No.	STATION	DA (ha.)	EXISTING STRUCTURES	PROPOSED STRUCTURES	T/C min.	"C" or "CW"	i_{10} mm/hr.	i_{50} mm/hr.	i_{100} mm/hr.	Q_{10} m^3/s	Q_{50} m^3/s	Q_{100} m^3/s
1	No.1	10+341.5	23.7	2-1200mm RCP	2-2100mm X 1200mm MBC	34	0.8	108	140	155	5.89	7.37	8.16
2	No.2	10+900	15.9 (2)	1-1800x1200 SC	1-1800mm X 1500mm SBC	20	0.7	147	189	211	4.54	5.84	6.52
3	No.3	11+347	23.0	2-1200mm CMP	2-1800mm X 1200mm MBC	33	0.8	110	142	158	5.62	7.26	8.08
4	No.4	11+539	42.4	2-1500x1200 MC	4-1500mm X 1200mm MBC	32	0.8	112	145	161	0.55	13.66	15.[illegible]7
5	Bridge	12+424	7589	Fan & Girder Bridge	(3)	-	-	-	-	-	<99 (4)	765 (4)	883 (4)
6	No.6	13+435	67.3	2-1500x900 MC	6-1500 X 900mm MBC	46	0.8	89	116	129	13.31	17.35	19.29
7	No.7	13+804.5	3.3	1-600mm CMP	1-900mm RCP	10	0.6	205	261	292	1.13	1.44	.61
8	(5) No.8	11+950	6.6	-	-	20	0.8	147	189	211	2.16	2.77	3.09

1. DRAINAGE AREA AND RELATED STRUCTURES HAVE SAME IDENTIFICATION
2. DRAINAGE AREA FOR STRUCTURE NO.2 INCLUDES DRAINAGE AREA'S 2-A THRU 2-I. SEE INTERIOR DRAINAGE MAP FOR ADDITIONAL DETAILS.
3. 54m (3-18M) PRE STRESSED CONCRETE BEAM UNIT.
4. FLOW FROM DRAINAGE STUDY AS PREPARED BY PAPE-DAWSON FOR THE CITY OF SAN ANTONIO TO BE SUBMITTED TO FEMA. FLOW IS BASED ON A HEC 1 ANALYSIS.
5. DRAINAGE AREA NO.8 IS FOR CHANNEL ALONG 1604 THAT DRAINS TO EXISTING CULVERT UNDER BOWENS CROSSING.

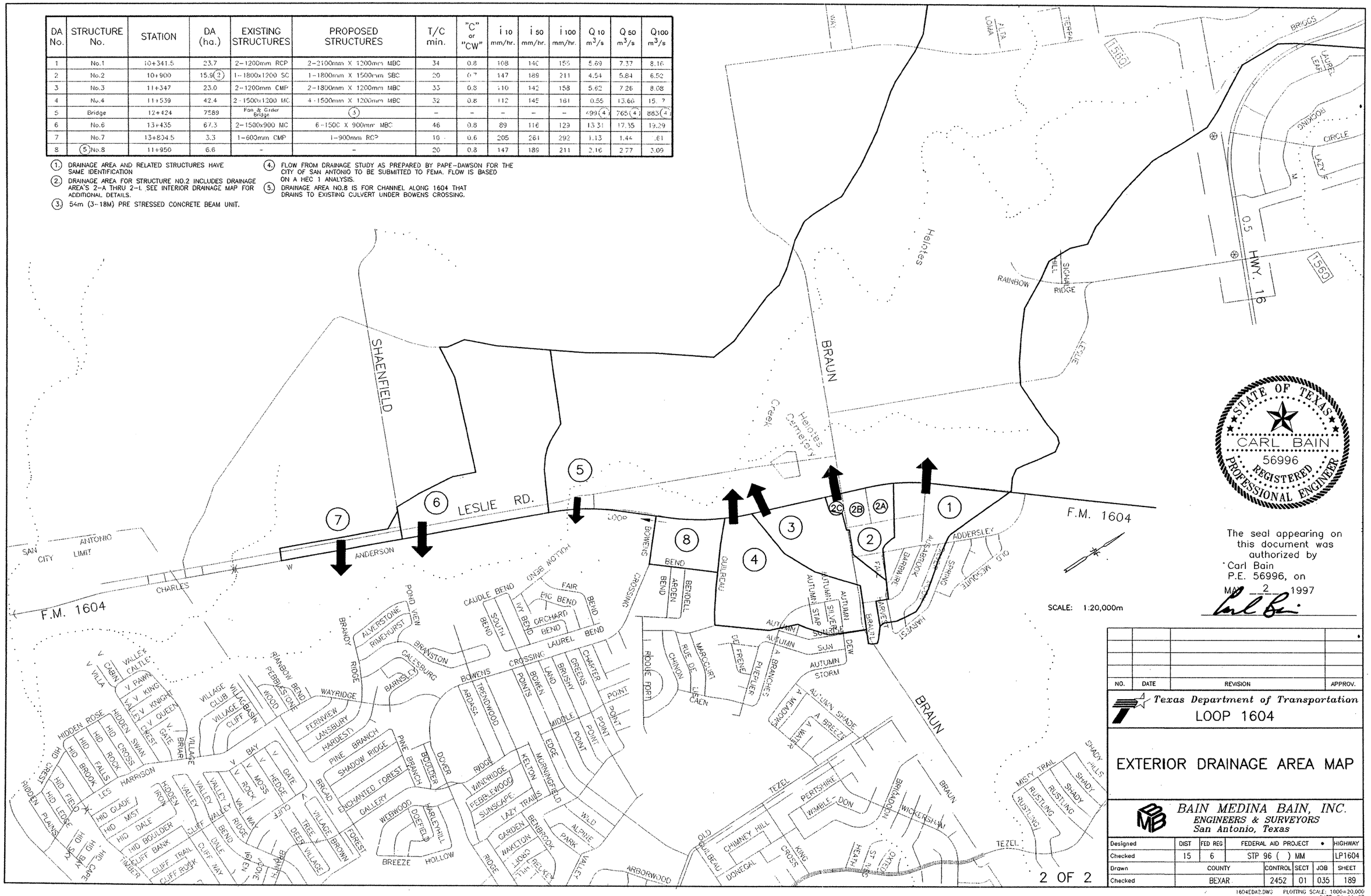

STATE OF TEXAS
CARL BAIN
56996
REGISTERED PROFESSIONAL ENGINEER

The seal appearing on this document was authorized by Carl Bain P.E. 56996, on MAY 2 1997

NO.	DATE	REVISION	APPROV.

Texas Department of Transportation
LOOP 1604

EXTERIOR DRAINAGE AREA MAP

BAIN MEDINA BAIN, INC.
ENGINEERS & SURVEYORS
San Antonio, Texas

Designed	DIST	FED REG	FEDERAL AID PROJECT			HIGHWAY
Checked	15	6	STP 96 ( ) MM			LP1604
Drawn	COUNTY		CONTROL	SECT	JOB	SHEET
Checked	BEXAR		2452	01	035	189

2 OF 2

1604EDA2.DWG PLOTTING SCALE: 1000=20,000
DATE: 04-11-97

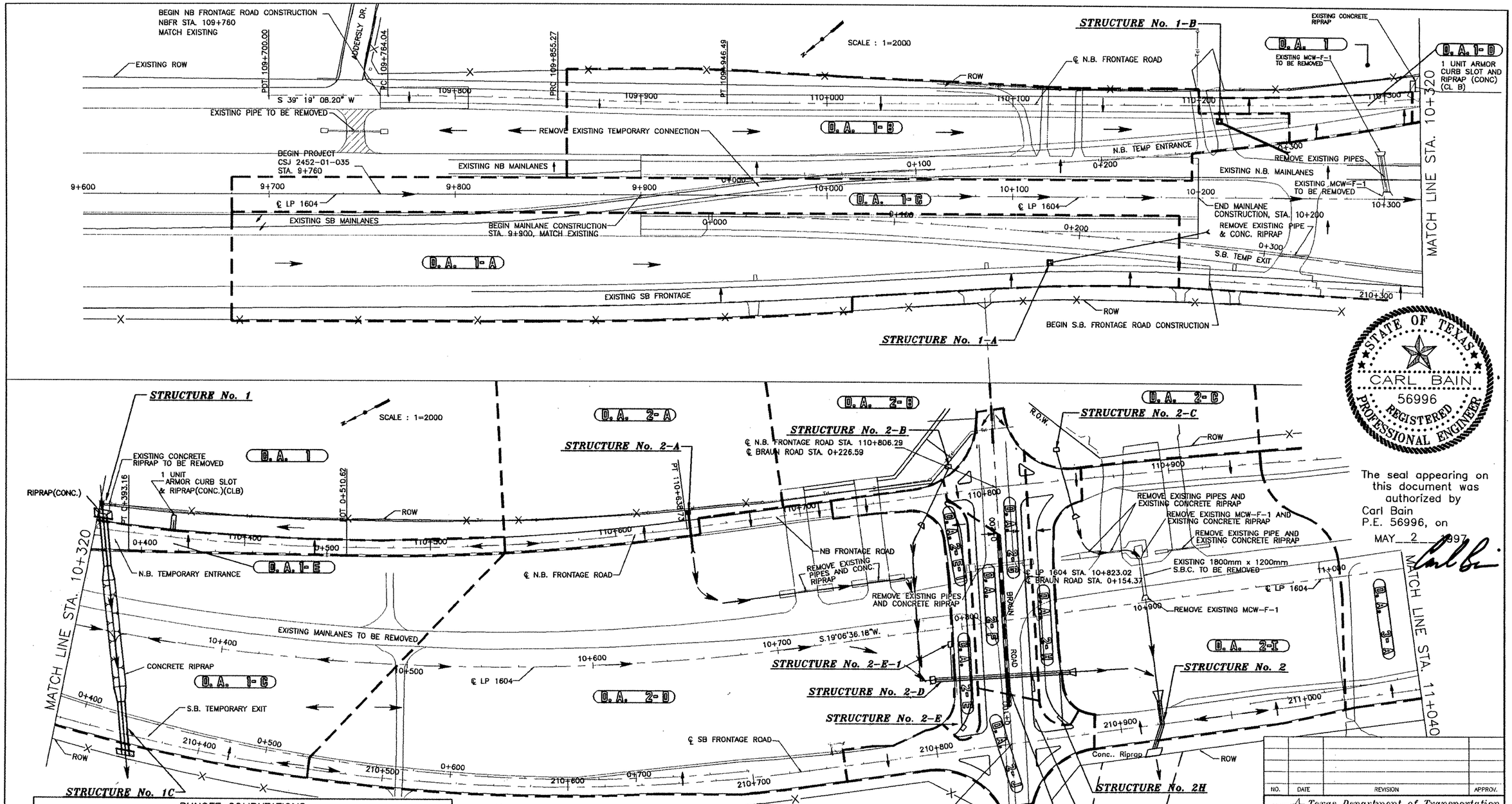

STATE OF TEXAS
CARL BAIN
56996
REGISTERED
PROFESSIONAL ENGINEER

The seal appearing on this document was authorized by Carl Bain P.E. 56996, on MAY 2 1997

RUNOFF COMPUTATIONS

DRAINAGE AREA	AREA (ha)	"C" w	TC min.	I10 mm/hr	I50 mm/hr	I100 mm/hr	Q10 M3/S	Q50 M3/S	Q100 M3/S
1-A	2.8	0.7	10	205	261	292	1.12	1.42	1.59
1-B	2.1	0.8	10	205	261	292	0.96	1.22	1.36
1-C	4.0	0.5	10	205	261	292	1.14	1.45	1.62
1-D	0.2	0.9	10	205	261	292	0.10	0.13	0.14
1-E	0.2	0.9	10	205	261	292	0.10	0.13	0.14
1,1A,1B,1C	32.4	0.8	34	108	140	155	7.78	10.08	11.16
2-A	1.5	0.8	10	205	261	292	0.68	0.87	0.97
2-B	6.3	0.8	18	165	211	236	2.31	2.95	3.30
2-C	1.1	0.8	10	205	261	292	0.50	0.64	0.71
2-D	4.0	0.5	10	205	261	292	1.14	1.45	1.62
2-A,B,D	11.8	0.7	18	155	199	222	3.56	4.57	5.09

RUNOFF COMPUTATIONS

DRAINAGE AREA	AREA (ha)	"C" w	TC min.	I10 mm/hr	I50 mm/hr	I100 mm/hr	Q10 M3/S	Q50 M3/S	Q100 M3/S
2-E	0.05	0.9	10	205	261	292	0.03	0.03	0.04
2-E-1	0.15	0.9	10	205	261	292	0.08	0.10	0.11
2-F	0.2	0.9	10	205	261	292	0.10	0.13	0.15
2-G	0.3	0.9	10	205	261	292	0.15	0.20	0.22
2-H	0.2	0.9	10	205	261	292	0.10	0.13	0.15
2-I	2.1	0.6	10	205	261	292	0.72	0.91	1.02
2-J	0.9	0.9	10	205	261	292	0.46	0.59	0.65
2-A,B,D,E,F,G,H	12.7	0.7	19	151	194	216	3.73	4.79	5.33
2-A thru 2-I	15.9	0.7	20	147	189	211	4.54	5.84	6.52

NO.	DATE	REVISION	APPROV.

Texas Department of Transportation
LOOP 1604

INTERIOR DRAINAGE AREA MAP
STA. 9+760 TO STA. 11+040

BAIN MEDINA BAIN, INC.
ENGINEERS & SURVEYORS
San Antonio, Texas

Designed	DIST	FED REG	FEDERAL AID PROJECT			HIGHWAY
Checked	15	6				LP1604
Drawn	COUNTY		CONTROL	SECT	JOB	SHEET
Checked	BEXAR		2452	01	035	190

1 OF 4

FILE = FEB 97\INTSHT1 PLOT SCALE : 1H=1000V

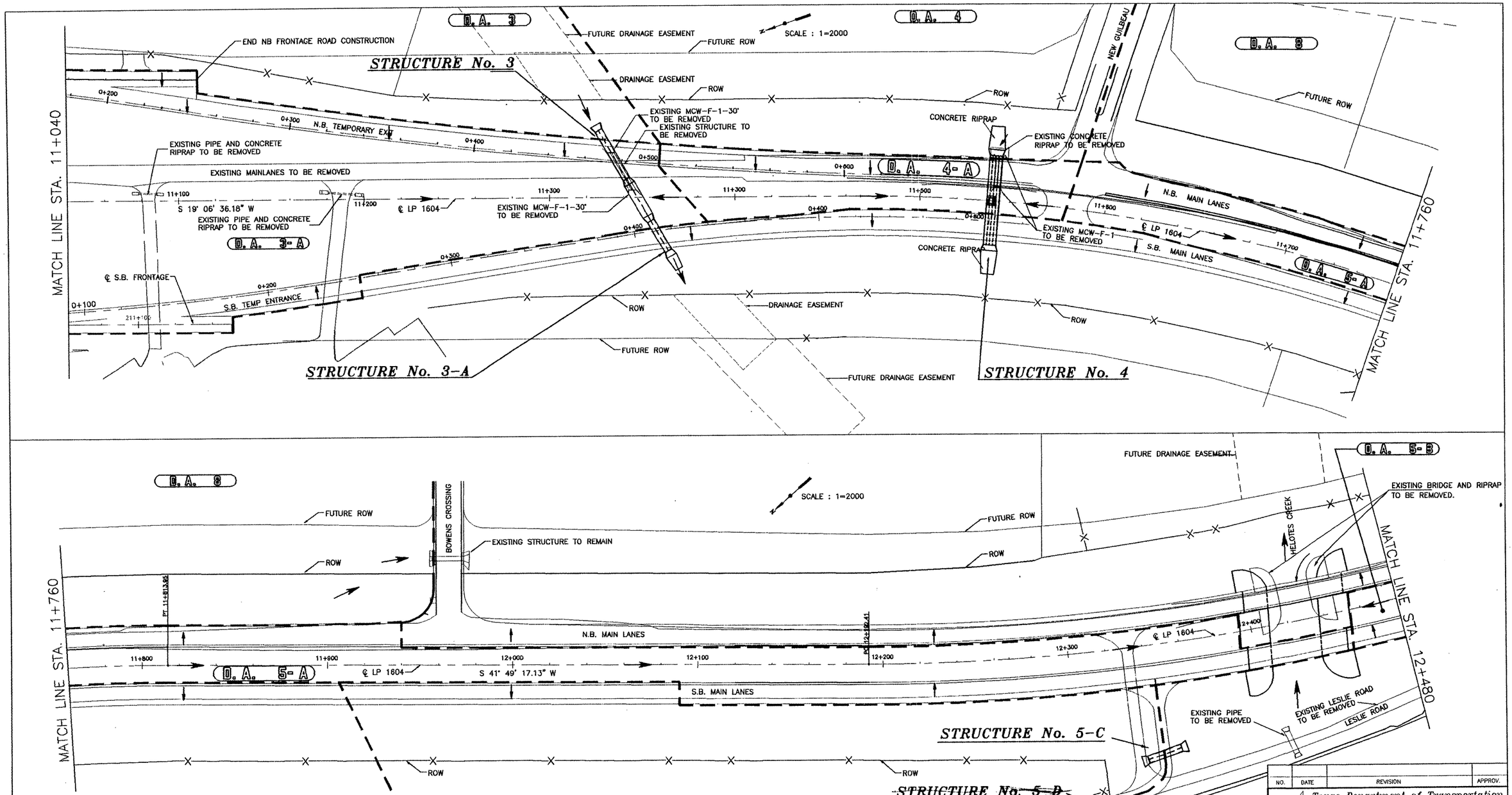

RUNOFF COMPUTATIONS									
DRAINAGE AREA	AREA (ha)	"C"	TC min.	I10 MM/hr	I50 MM/hr	I100 MM/hr	Q10 M3/S	Q50 M3/S	Q100 M3/S
3-A	3.7	0.5	10	205	261	292	1.05	1.34	1.50
3 & 3-A	26.7	0.8	34	108	140	156	6.41	8.31	9.26
4-A	0.7	0.6	10	205	261	292	0.24	0.30	0.34
5-A	2.4	0.6	10	205	261	292	0.82	1.04	1.17
5-B	0.4	0.6	10	205	261	292	0.14	0.17	0.19
5-C	4.0	0.4	20	147	189	211	0.65	0.84	0.94
5-D	0.5	0.4	10	205	261	292	0.11	0.15	0.16

The seal appearing on this document was authorized by Carl Bain P.E. 56996, on MAY 2 1997

STATE OF TEXAS
CARL BAIN
56996
REGISTERED
PROFESSIONAL ENGINEER

NO.	DATE	REVISION	APPROV.

Texas Department of Transportation
LOOP 1604

INTERIOR DRAINAGE AREA MAP
STA. 11+040 TO STA. 12+480

BAIN MEDINA BAIN, INC.
ENGINEERS & SURVEYORS
San Antonio, Texas

Designed	DIST	FED REC	FEDERAL AID PROJECT		HIGHWAY
Checked	15	6			LP 1604
Drawn	COUNTY		CONTROL	SECT	JOB	SHEET
Checked	BEXAR		2452	01	035	191

2 OF 4

FILE : \FEB.97\INT'SHT2
DATE : 04/11/97
PLOT SCALE : 1000 = 2000

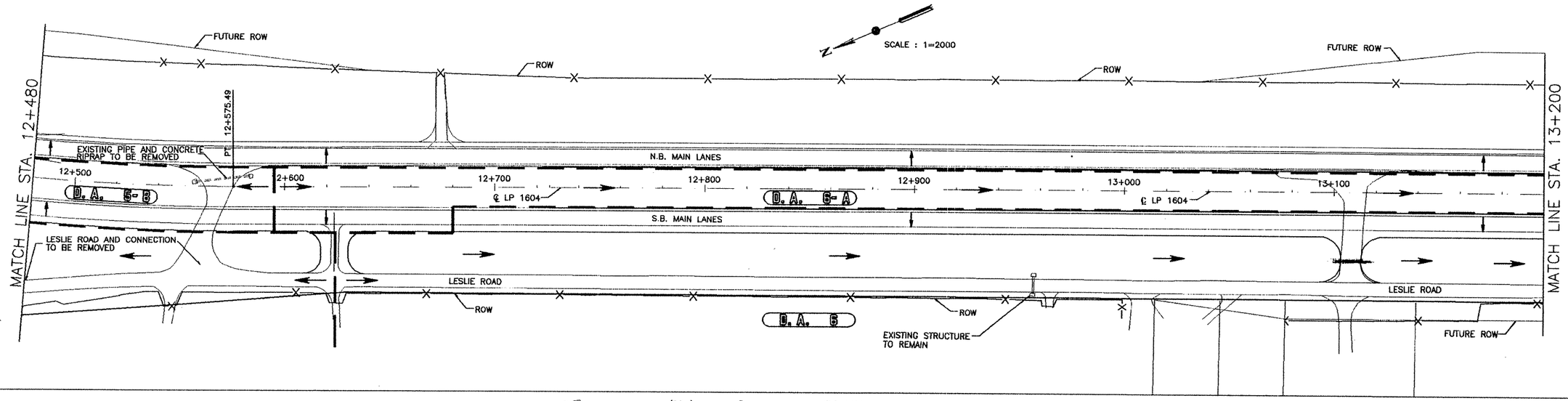

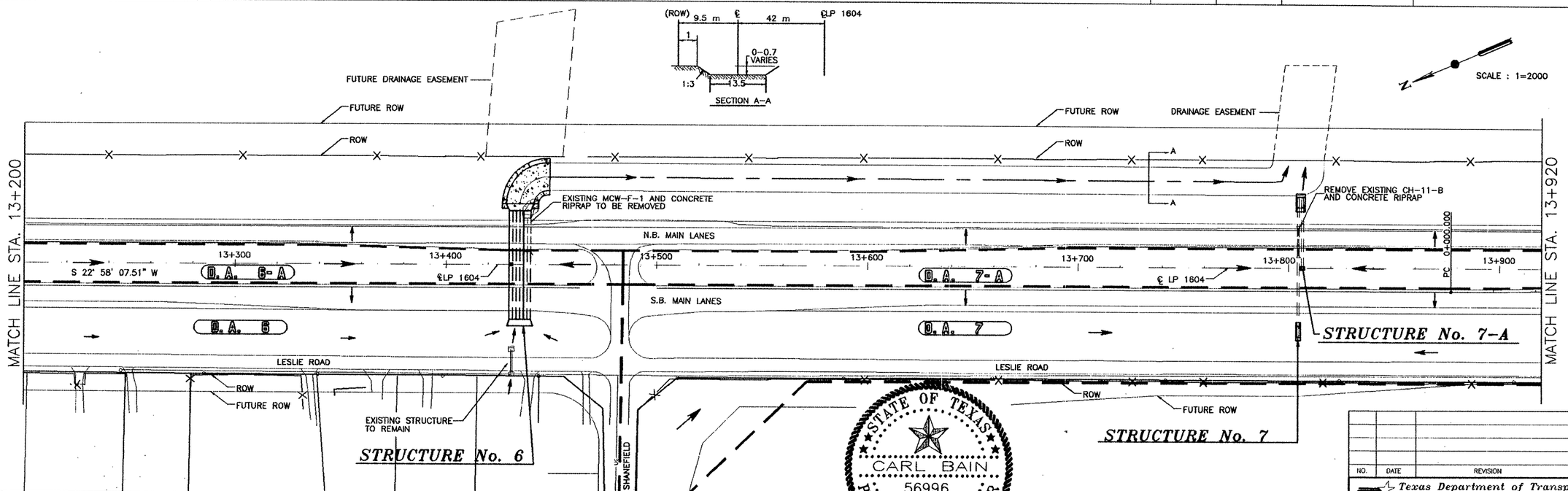

RUNOFF COMPUTATIONS

DRAINAGE AREA	AREA (ha)	"C"	TC min.	I_{10} MM/hr	I_{50} MM/hr	I_{100} MM/hr	Q_{10} M^3/S	Q_{50} M^3/S	Q_{100} M^3/S
6-A	1.7	0.4	10	205	261	292	0.39	0.49	0.55
7	3.3	0.6	10	205	261	292	1.13	1.44	1.61
7-A	1.1	0.4	10	205	261	292	0.25	0.32	0.36
7 & 7-A	4.4	0.6	10	205	261	292	1.50	1.91	2.14

STATE OF TEXAS
CARL BAIN
56996
REGISTERED
PROFESSIONAL ENGINEER

The seal appearing on this document was authorized by Carl Bain P.E. 56996, on MAY 2, 1997

Carl Bain

3 OF 4

NO.	DATE	REVISION	APPROV.

Texas Department of Transportation
LOOP 1604

INTERIOR DRAINAGE AREA MAP
STA. 12+480 TO STA. 13+920

BAIN MEDINA BAIN, INC.
ENGINEERS & SURVEYORS
San Antonio, Texas

Designed	DIST	FED REG	FEDERAL AID PROJECT •			HIGHWAY
Checked	15	6				LP 1604
Drawn	COUNTY		CONTROL	SECT	JOB	SHEET
Checked	BEXAR		2452	01	035	192

INTSHT3.DWG PLOTTING SCALE: 1000=2000
DATE: 04-11-97

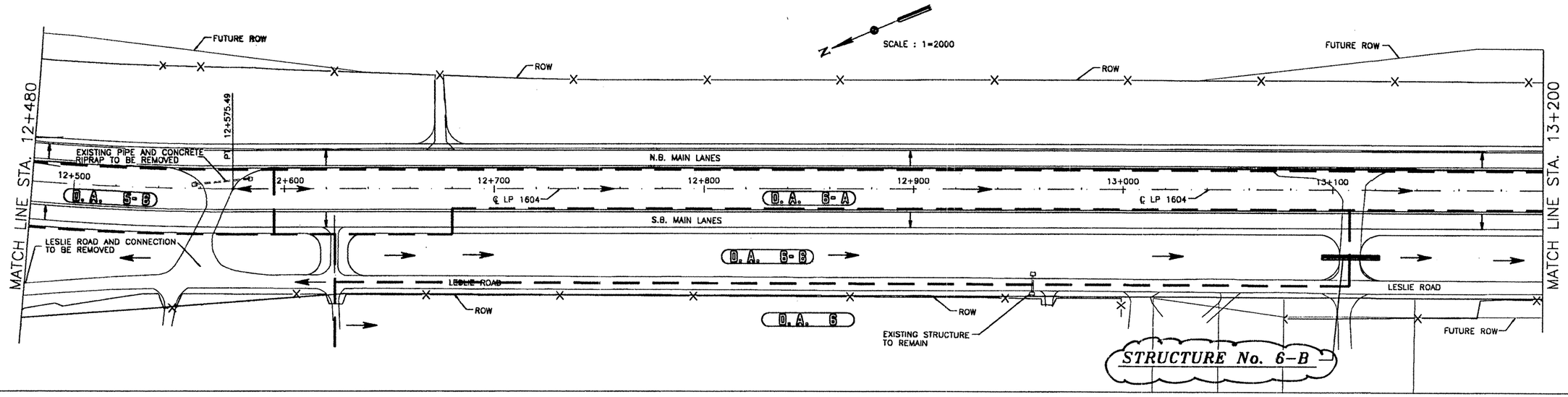

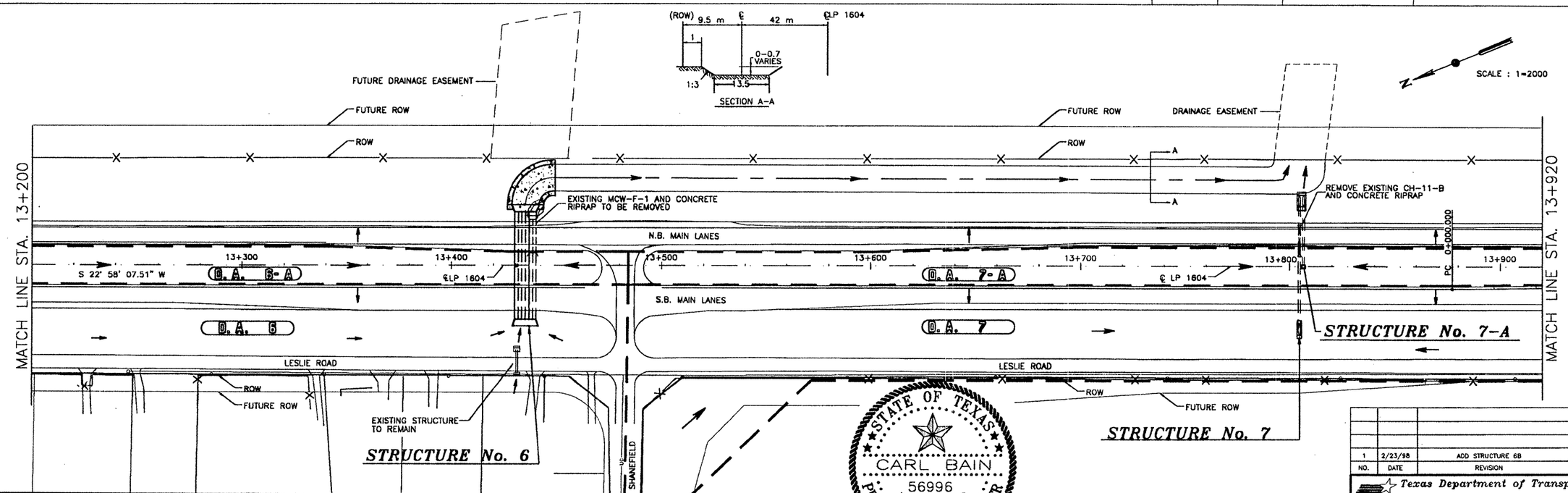

RUNOFF COMPUTATIONS

DRAINAGE AREA	AREA (ha)	"C"	TC min.	I_{10} MM/hr	I_{50} MM/hr	I_{100} MM/hr	Q_{10} M³/S	Q_{50} M³/S	Q_{100} M³/S
6-A	1.7	0.4	10	205	261	292	0.39	0.49	0.55
6-B	1.6	0.6	10	205	261	292	0.55	0.70	0.78
7	3.3	0.6	10	205	261	292	1.13	1.44	1.61
7-A	1.1	0.4	10	205	261	292	0.25	0.32	0.36
7 & 7-A	4.4	0.6	10	205	261	292	1.50	1.91	2.14

STATE OF TEXAS
CARL BAIN
56996
REGISTERED
PROFESSIONAL ENGINEER

The seal appearing on this document was originally authorized by Carl Bain P.E. 56996, on FEB 23 1998

(Change Order #21)

NO.	DATE	REVISION	APPROV.
1	2/23/98	ADD STRUCTURE 6B	CB

Texas Department of Transportation
LOOP 1604

INTERIOR DRAINAGE AREA MAP
STA. 12+480 TO STA. 13+920

BAIN MEDINA BAIN, INC.
ENGINEERS & SURVEYORS
San Antonio, Texas

Designed	DIST	FED REG	FEDERAL AID PROJECT •				HIGHWAY
Checked	15	6					LP 1604
Drawn	COUNTY		CONTROL	SECT	JOB		SHEET
Checked	BEXAR		2452	01	035		192

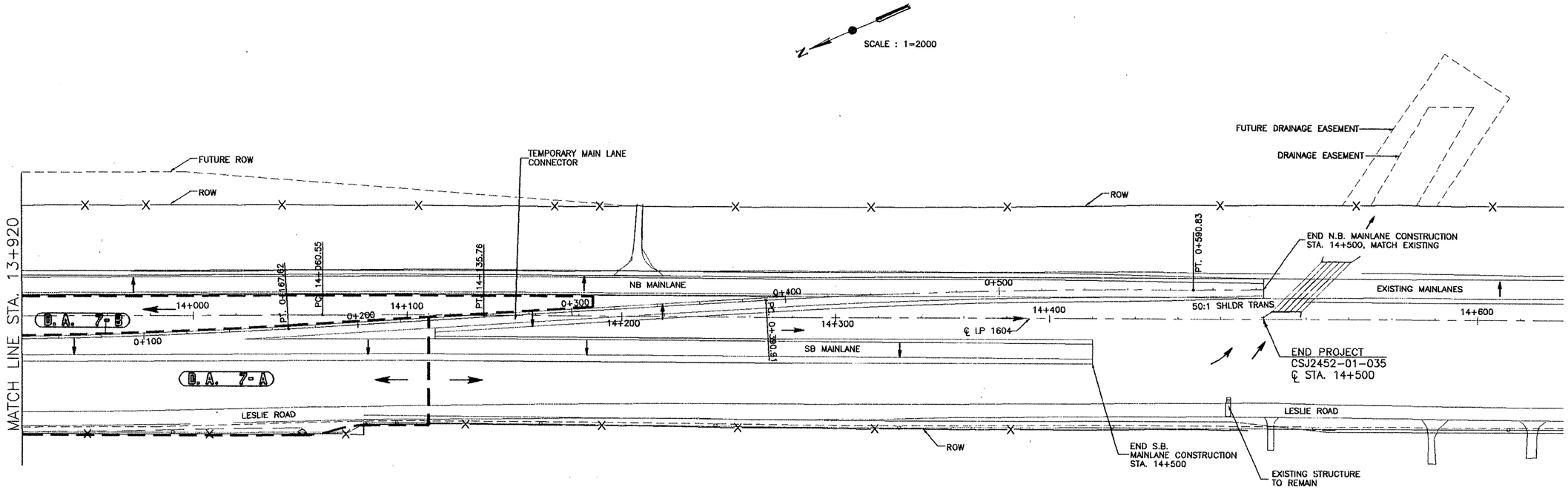

STATE OF TEXAS
CARL BAIN
56996
REGISTERED
PROFESSIONAL ENGINEER

The seal appearing on this document was authorized by Carl Bain P.E. 56996, on MAY 2 1997

NO.	DATE	REVISION	APPROV.

Texas Department of Transportation

LOOP 1604

INTERIOR DRAINAGE AREA MAP STA. 13+920 TO STA. 14+500

BAIN MEDINA BAIN, INC.
ENGINEERS & SURVEYORS
San Antonio, Texas

Designed	DIST	FED REG	FEDERAL AID PROJECT •			HIGHWAY
Checked	15	6				LP 1604
Drawn	COUNTY		CONTROL	SECT	JOB	SHEET
Checked	BEXAR		2452	01	035	193

INTSHT4.DWG PLOTTING SCALE: 1000=2000
DATE: 04-11-97

HYDRAULIC DATA SHEET FOR STRUCTURES UNDER 42.5 C.M.S.

(PIPES, PIPE ARCHES & BOX CULVERTS)

STRUCTURE NO.	FREQ. YEAR	"Q" m^3/s	ALLOW HW (ELEV)	OUTLET CHANNEL w (METERS)	SS	N	S M/M	TW (ELEV)	SIZE, LENGTH & DESCRIPTION	SLOPE M/M	KE	HW (ELEV)	V-OUT M/SEC	REMARKS
1 STA. 10+341.5	50 (DES)	7.37	300.37	7.6	3	0.015	0.01612	298.72	2 – 2100mm x 1200mm x 25.5m M.B.C. with PW-15-1.2 Upstream and SET B-0-3 Downstream.	0.0020	0.50	299.66	2.57	Riprap Lined Ditch at Outlet.
	100	8.16						298.73				299.74	2.66	
1C STA. 10+341.5	50 (DES)	10.08	299.76	4.9	3	0.015	0.0020	298.00	2 – 2100mm x 1200mm x 27m M.B.C. With SET B-0-3 Upstream and PW-15-1.2 Downstream.	0.0020	0.40	298.72	2.85	Riprap Lined Ditch at Outlet.
	100	11.16						298.04				298.81	2.95	
2 STA. 10+900	50 (DES)	5.84	295.97	1.8	3	0.015	0.0020	294.18	1 – 1800mm x 1500mm x 25.5m S.B.C. With SET B-0-3 Upstream and PW-0-1.5	0.0020	0.40	295.15	3.15	Riprap Lined Ditch at Outlet. Existing Easement.
	100	6.52						294.22				295.28	3.27	
3 STA. 11+347	50 (DES)	7.26	288.84	7.0	3	0.015	0.0550	285.45	2 – 1800mm x 1200mm x 30m M.B.C. With SET B-0-3 Upstream and Downstream	0.0359	0.40	287.48	5.21	Riprap Lined Ditch at Outlet.
	100	8.08						285.47				287.57	5.31	
3A STA. 11+347	50 (DES)	8.31	286.59	7.0	3	0.015	0.0016	284.71	2 – 1800mm x 1200mm x 19m M.B.C. With SET B-0-3 Upstream and Downstream	0.0016	0.40	285.52	2.81	Riprap Lined Ditch at Outlet.
	100	9.26						284.75				285.62	2.92	
4 STA. 11+539	50 (DES)	13.66	285.70	10.2	3	0.015	0.0010	282.55	4 – 1500mm x 1200mm x 48.5m M.B.C. With SET B-0-3 Upstream and Downstream.	0.1106	0.40	284.77	4.58	Broken Back Configuration Riprap Lined Ditch at Outlet.
	100	15.17						282.59		0.0025		284.93	4.74	
4 STA. 11+541.5	50 (DES)	13.66	284.81	3.05	2	0.035	0.0046	283.91	Existing 2 – 1500mm X 1200mm X 14.9m MC5-1 With MCW – F1 Wings and Riprap Basin Upstream & MCW – F1 Wings Downstream	0.1129	0.40	284.85	4.86	Existing Conditions-Broken Back-Earthen ditch. Overtops Roadway
	100	15.17						283.98		0.0046		284.89	2.79	
6 STA. 13+435	50 (DES)	17.35	275.82	13.5	3	0.015	0.0020	274.59	Existing 2 – 1500mm x 900mm x 15.8m M.B.C. To Be Extended 33m Upstream and 4.4m Downstream and 4 – 1500mm x 900mm x 52m M.B.C. With SET B-0-3 Upstream and Downstream.	0.0014	0.40	275.29	2.65	Riprap Lined Ditch at Outlet.
	100	19.29						274.63				275.44	2.75	
6 STA. 13+438.5	50 (DES)	17.35	275.70	3.05	2	0.015	0.0013	275.37	Existing 2 – 1500mm X 900mm X 15.9m MC5 – 1 With MCW – F1 Wings Upstream and Riprap Turn Basin Downstream	0.0013	0.40	275.38	0.45	Existing Conditions-Riprap Lined Ditch at Outlet Overtops Roadway
	100	19.29						275.44				275.45	0.40	
7 STA. 10+804.5	50 (DES)	1.44	275.22	–	–	0.050	0.0054	273.43	1 – 900mm R.C.P. (CL III) x 65.5m (With SET Upstream and Downstream)	0.0053	0.50	274.73	2.65	Riprap at Outlet.
	100	1.61						273.44				274.93	2.81	
2B STA. 0+240 (25 LT)	10 (DES)	2.31	299.00	4.0	3	0.035	0.0050	297.17	1 – 1200mm x 1200mm x 33m S.B.C. With SET B-0-3 Downstream and 1-TYW-1 Drop Inlet Upstream	0.0020	0.50	298.08	1.94	Riprap at Outlet.
	100	3.30						297.27				298.47	2.29	
5C STA. 12+340 (59 RT)	10 (DES)	0.65	278.50	2.3	3	0.035	0.0050	274.52	1 – 750mm R.C.P. (CL III) x 37m With SET Upstream and Downstream	0.0050	0.40	275.20	2.15	
	100	0.94						274.58				275.46	2.44	
5D STA. 0+240	10 (DES)	0.11	275.81	1.8	3	0.035	0.0142	274.89	1 – 600mm RCP (CL III) X 16.5m With SET Upstream and Downstream	0.0142	0.40	275.29	1.98	
	100	0.16						274.92				275.37	2.13	

NOTE:

Hydraulic Calculations based on THYSYS.

STATE OF TEXAS
CARL BAIN
56996
REGISTERED PROFESSIONAL ENGINEER

The seal appearing on this document was authorized by Carl Bain P.E. 56996, on MAY 2, 1997

NO.	DATE	REVISION	APPROV.

Texas Department of Transportation
LOOP 1604

HYDRAULIC DATA SHEET
STRUCTURES UNDER 42.5 C.M.S.

BAIN MEDINA BAIN, INC.
ENGINEERS & SURVEYORS
San Antonio, Texas

Designed	DIST	FED REG	FEDERAL AID PROJECT				HIGHWAY
Checked	15	6					LP 1604
Drawn	COUNTY		CONTROL	SECT	JOB		SHEET
Checked	BEXAR		2452	01	035		194

HYDRSHT.DWG PLOTTING SCALE: 1000=1000
DATE: 04-28-97

INLET COMPUTATIONS

CURB INLET No.	D.A. No.	Qa (10)	CARRY OVER	TOTAL Qa	Z	Z/n	S	Y	P	a	qL	Lr	La	La/Lr	a/y	Ql/Qa	Ql	CARRY OVER	Remarks
		M3/S	M3/S	M3/S		n=.015	M/M	M	M	M	M3/S	M	M				M3/S	M3/S	
1D	1D-1	0.10	0	0.10	37	2469	0.0081	0.079	2.93	0.065	0.027	3.7	3.0	0.82	0.66	0.91	0.09	0.01	1 UNIT ARMOR CURB SLOT ON GRADE
1-E	1D	0.10	0.01	0.11	37	2469	0.0025	0.104	3.83	0.065	0.104	1.1	3.0	–	–	–	–	–	1 UNIT ARMOR CURB SLOT SAG LOCATION 100% INTERCEPT
2E-1	2E-1	0.08	0	0.08	50	3333	0.0230	0.055	2.74	0.065	0.022	3.6	6.0	–	–	–	–	–	TY III CURB INLET ON GRADE 100% INTERCEPT
2E	2E	0.03	0	0.03	86	5733	0.0026	0.046	3.96	0.065	0.051	0.6	3.0	–	–	–	–	–	TY I CURB INLET SAG LOCATION 100% INTERCEPT
2F	2F	0.10	0	0.10	50	3333	0.0063	0.076	3.81	0.065	0.027	3.7	6.1	–	–	–	–	–	TY III CURB INLET ON GRADE 100% INTERCEPT
2G	2G	0.15	0	0.15	50	3333	0.0063	0.088	4.36	0.065	0.030	5.0	6.1	–	–	–	–	–	TY III CURB INLET ON GRADE 100% INTERCEPT
2H	2H	0.10	0	0.10	127	8467	0.0074	0.055	6.95	0.065	0.022	4.6	6.1	–	–	–	–	–	TY III CURB INLET ON GRADE 100% INTERCEPT

DRAIN PIPE CALCULATIONS

FROM	TO	D.A. No.	TOTAL D.A.	TOTAL C.A.	LENGTH	TIME OF CONCENTRATION (MINUTES)			I	Q	DIA	SLOPE	Du	VEL	Remarks
			ha		M	ALONG DRAIN LINE	INLET TIME	USED IN DESIGN	MM/HR	M3/S	MM	M/M	MM	M/S	
DROP INLET 1A	OUTLET	1A	2.8	1.95	97	1	7	10	205	1.12	900	0.0040	669	2.21	R.C.P., SET @ OUTLET
DROP INLET 1B	OUTLET	1B	2.1	1.68	36	1	7	10	205	0.96	900	0.0040	595	2.15	R.C.P., SET @ OUTLET
DROP INLET 2A	OUTLET	2A	1.5	1.20	19	1	3	10	205	0.68	750	0.0050	490	2.13	R.C.P., SET @ OUTLET
DROP INLET 2B	OUTLET	2B	6.3	5.04	37	1	15	16	165	2.31	1200x1200	0.0020	995	1.94	S.B.C., SET @ OUTLET
DROP INLET 2C	OUTLET	2C	1.1	0.88	40.5	1	2	10	205	0.50	600	0.0060	476	2.08	R.C.P., SET @ OUTLET
DROP INLET 2D	OUTLET	2A, 2B, 2D 2E, 2F, 2G 2H	12.7	8.89	68.5	1	18	19	151	3.73	1500x1200	0.0030	967	2.57	S.B.C., SET @ OUTLET
CURB INLET 2E-1	STRUCTURE 2D	2E-1	0.15	0.09	19.7	1	2	10	205	0.05	600	0.0479	76	2.40	R.C.P.
CURB INLET 2E	STRUCTURE 2D	2E	0.05	0.18	28.5	1	2	10	205	0.10	600	0.0085	164	1.60	R.C.P.
CURB INLET 2F	STRUCTURE 2D	2F	0.2	0.18	4.3	1	2	10	205	0.10	600	0.0720	96	3.40	R.C.P.
CURB INLET 2G	STRUCTURE 2D	2G	0.3	0.27	4.3	1	2	10	205	0.15	600	0.0172	168	2.31	R.C.P.
CURB INLET 2H	STRUCTURE 2D	2H	0.2	0.18	23.5	1	2	10	205	0.10	600	0.0050	189	1.40	R.C.P.
DROP INLET 7A	OUTLET	7A	1.1	0.44	33.5	1	3	10	205	0.25	600	0.0053	306	1.73	R.C.P., SET @ OUTLET

DROP INLETS

DROP INLET No.	AREA	Q_{10}	HEAD AVAILABLE	HEAD REQUIRED	TOP ELEVATION	INLET "H"	TYPE STATION & OFFSET
	ha	M3/S	mm	mm	M	M	
1A	2.8	1.12	400	396	304.00	1.41	TY 6, (DROP) 35m Rt., ℄ LP 1604, STA. 10+120
1B	2.1	0.96	290	290	302.19	1.55	TY 6, (DROP) 40m Lt., ℄ LP 1604, STA. 10+210
2A	1.5	0.68	300	137	300.18	1.18	TY 6, (DROP) 18.08m Lt, ℄ LP 1604, STA. 10+660
2B	6.3	2.31	810	762	297.75	1.75	1 TY W-1, 22.5m Lt., ℄ BRAUN RD., STA 0+243
2C	1.1	0.50	508	472	296.92	2.62	TY 3, (DROP) 40m Rt, ℄ BRAUN RD, STA. 0+245
2D	11.8	3.56	510	457	295.75	2.00	2 TY W-1, 36.3m Lt., ℄ BRAUN RD., STA 0+125
4A	0.7	0.24	300	91	284.28	0.95	TY 3A (DROP), ℄ LP 1604, STA. 11+538
6A	1.7	0.39	621	274	275.33	0.24	TY 3A (DROP), ℄ LP 1604, STA. 13+429.913
7A	1.1	0.25	760	91	274.68	1.27	TY 3 (DROP), ℄ LP 1604., STA. 13+805.725

Note:
Hydraulic Calculations Based on Nomagraph's and Normal Depth Calculations.

STATE OF TEXAS
CARL BAIN
56996
REGISTERED
PROFESSIONAL ENGINEER

The seal appearing on this document was authorized by Carl Bain P.E. 56996, on MAY 2, 1997

NO.	DATE	REVISION	APPROV.

Texas Department of Transportation
LOOP 1604

INLET COMPUTATIONS & DRAIN PIPE CALCULATIONS

BAIN MEDINA BAIN, INC.
ENGINEERS & SURVEYORS
San Antonio, Texas

Designed	DIST	FED REG	FEDERAL AID PROJECT			HIGHWAY
Checked	15	6				LP 1604
Drawn	COUNTY		CONTROL	SECT	JOB	SHEET
Checked	BEXAR		2452	01	035	195

INL-CHT.DWG PLOTTING SCALE: 1000=500 REVISED DATE: 04-28-97

HYDRAULIC DATA SHEET FOR STRUCTURES UNDER 42.5 C.M.S.

(PIPES, PIPE ARCHES & BOX CULVERTS)

STRUCTURE NO.	FREQ. YEAR	"Q" m^3/s	ALLOW HW (ELEV)	OUTLET CHANNEL w (METERS)	SS	N	S M/M	TW (ELEV)	SIZE, LENGTH & DESCRIPTION	SLOPE M/M	KE	HW (ELEV)	V-OUT M/SEC	REMARKS
1 STA. 10+341.5	50 (DES)	7.37	300.37	7.6	3	0.015	0.01612	298.72	2 – 2100mm x 1200mm x 25.5m M.B.C. with PW-15-1.2 Upstream and SET B-0-3 Downstream.	0.0020	0.50	299.66	2.57	Riprap Lined Ditch at Outlet.
	100	8.16						298.73				299.74	2.66	
1C STA. 10+341.5	50 (DES)	10.08	299.76	4.9	3	0.015	0.0020	298.00	2 – 2100mm x 1200mm x 27m M.B.C. With SET B-0-3 Upstream and PW-15-1.2 Downstream.	0.0020	0.40	298.72	2.85	Riprap Lined Ditch at Outlet.
	100	11.16						298.04				298.81	2.95	
2 STA. 10+900	50 (DES)	5.84	295.97	1.8	3	0.015	0.0020	294.18	1 – 1800mm x 1500mm x 25.5m S.B.C. With SET B-0-3 Upstream and PW-0-1.5	0.0020	0.40	295.15	3.15	Riprap Lined Ditch at Outlet. Existing Easement.
	100	6.52						294.22				295.28	3.27	
3 STA. 11+347	50 (DES)	7.26	288.84	7.0	3	0.015	0.0550	285.45	2 – 1800mm x 1200mm x 30m M.B.C. With SET B-0-3 Upstream and Downstream	0.0359	0.40	287.48	5.21	Riprap Lined Ditch at Outlet.
	100	8.08						285.47				287.57	5.31	
3A STA. 11+347	50 (DES)	8.31	286.59	7.0	3	0.015	0.0016	284.71	2 – 1800mm x 1200mm x 19m M.B.C. With SET B-0-3 Upstream and Downstream	0.0016	0.40	285.52	2.81	Riprap Lined Ditch at Outlet.
	100	9.26						284.75				285.62	2.92	
4 STA. 11+539	50 (DES)	13.66	285.70	10.2	3	0.015	0.0010	282.55	4 – 1500mm x 1200mm x 48.5m M.B.C. With SET B-0-3 Upstream and Downstream.	0.1106	0.40	284.77	4.58	Broken Back Configuration Riprap Lined Ditch at Outlet.
	100	15.17						282.59		0.0025		284.93	4.74	
4 STA. 11+541.5	50 (DES)	13.66	284.81	3.05	2	0.035	0.0046	283.91	Existing 2 – 1500mm X 1200mm X 14.9m MC5-1 With MCW – F1 Wings and Riprap Basin Upstream & MCW – F1 Wings Downstream	0.1129	0.40	284.85	4.86	Existing Conditions-Broken Back-Earthen ditch. Overtops Roadway
	100	15.17						283.98		0.0046		284.89	2.79	
6 STA. 13+435	50 (DES)	17.35	275.82	13.5	3	0.015	0.0020	274.59	Existing 2 – 1500mm x 900mm x 15.8m M.B.C. To Be Extended 33m Upstream and 4.4m Downstream and 4 – 1500mm x 900mm x 52m M.B.C. With SET B-0-3 Upstream and Downstream.	0.0014	0.40	275.29	2.65	Riprap Lined Ditch at Outlet.
	100	19.29						274.63				275.44	2.75	
6 STA. 13+438.5	50 (DES)	17.35	275.70	3.05	2	0.015	0.0013	275.37	Existing 2 – 1500mm X 900mm X 15.9m MC5 – 1 With MCW – F1 Wings Upstream and Riprap Turn Basin Downstream	0.0013	0.40	275.38	0.45	Existing Conditions-Riprap Lined Ditch at Outlet Overtops Roadway
	100	19.29						275.44				275.45	0.40	
7 STA. 10+804.5	50 (DES)	1.44	275.22	–	–	0.050	0.0054	273.43	1 – 900mm R.C.P. (CL III) x 65.5m (With SET Upstream and Downstream)	0.0053	0.50	274.73	2.65	Riprap at Outlet.
	100	1.61						273.44				274.93	2.81	
2B STA. 0+240 (25 LT)	10 (DES)	2.31	299.00	4.0	3	0.035	0.0050	297.17	1 – 1200mm x 1200mm x 33m S.B.C. With SET B-0-3 Downstream and 1-TYW-1 Drop Inlet Upstream	0.0020	0.50	298.08	1.94	Riprap at Outlet.
	100	3.30						297.27				298.47	2.29	
5C STA. 12+340 (59 RT)	10 (DES)	0.65	278.50	2.3	3	0.035	0.0050	274.52	1 – 750mm R.C.P. (CL III) x 37m With SET Upstream and Downstream	0.0050	0.40	275.20	2.15	
	100	0.94						274.58				275.46	2.44	
5D STA. 0+240	10 (DES)	0.11	275.81	1.8	3	0.035	0.0142	274.89	1 – 600mm RCP (CL III) X 16.5m With SET Upstream and Downstream	0.0142	0.40	275.29	1.98	
	100	0.16						274.92				275.37	2.13	
6B STA. 13+108 (32m RT)	10 (DES)	0.55	276.30	2.3	3	0.035	0.0030	275.39	1 – 750mm RCP (CL III) X 25m With SET Upstream and Downstream	0.0030	0.40	275.92	1.56	
	100	0.78						275.46				276.21	1.77	

NOTE:
Hydraulic Calculations based on THYSYS.

Change Order #21

STATE OF TEXAS
CARL BAIN
56996
REGISTERED
PROFESSIONAL ENGINEER

The seal appearing on this document was originally authorized by Carl Bain P.E. 56996, on FEB 23 1998

NO.	DATE	REVISION	APPROV.
1	2/23/98	ADDED STRUCTURE 6B	CB

Texas Department of Transportation
LOOP 1604

HYDRAULIC DATA SHEET
STRUCTURES UNDER 42.5 C.M.S.

BAIN MEDINA BAIN, INC.
ENGINEERS & SURVEYORS
San Antonio, Texas

Designed	DIST	FED REG	FEDERAL AID PROJECT				HIGHWAY
Checked	15	6					LP 1604
Drawn	COUNTY		CONTROL	SECT	JOB		SHEET
Checked	BEXAR		2452	01	035		194A

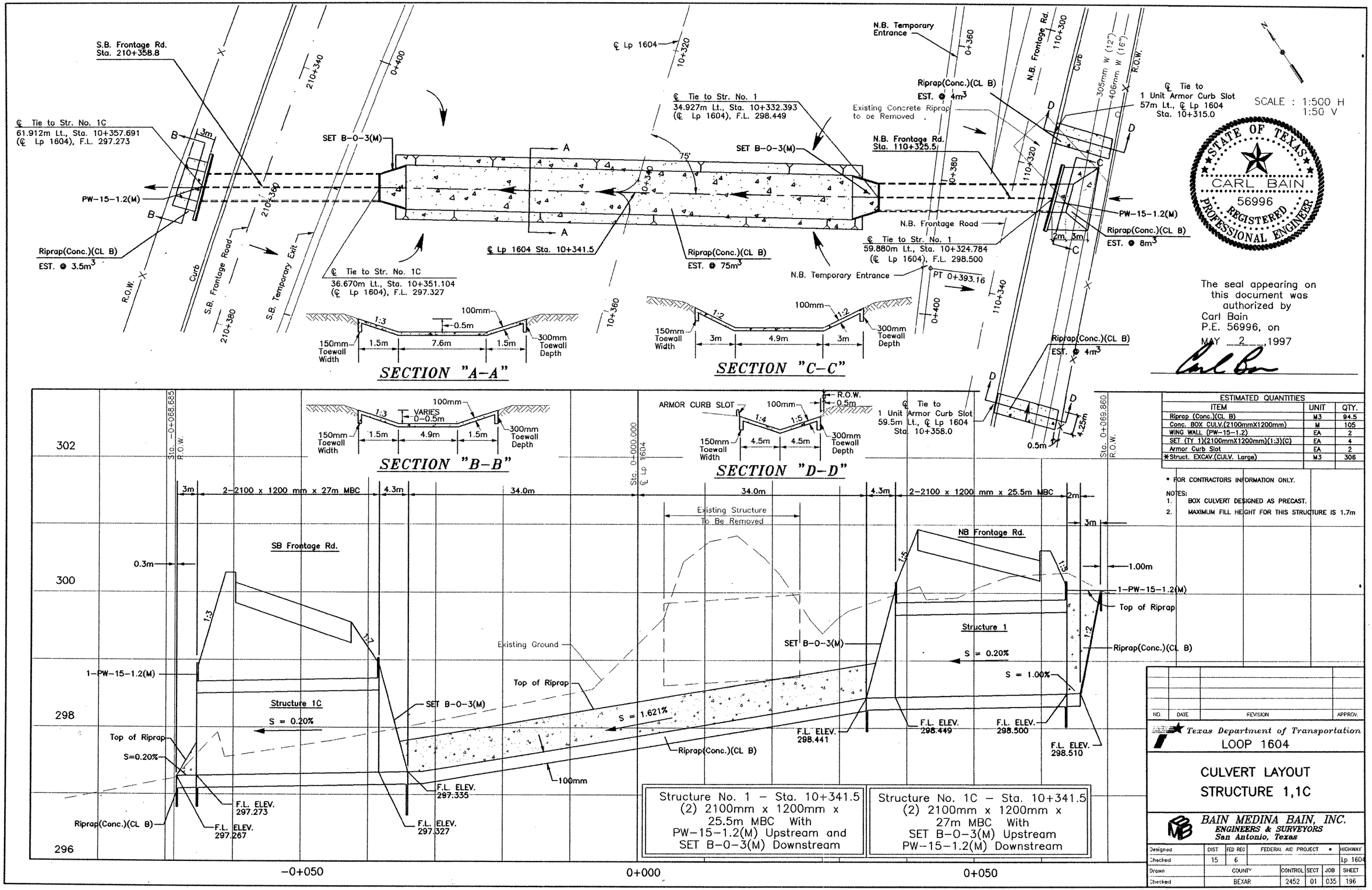

ESTIMATED QUANTITIES		
ITEM	UNIT	QTY.
Riprap (Conc.)(CL B)	M3	94.5
Conc. BOX CULV.(2100mmX1200mm)	M	105
WING WALL (PW-15-1.2)	EA	2
SET (TY 1)(2100mmX1200mm)(1:3)(C)	EA	4
Armor Curb Slot	EA	2
*Struct. EXCAV.(CULV. Large)	M3	306

* FOR CONTRACTORS INFORMATION ONLY.

NOTES:
1. BOX CULVERT DESIGNED AS PRECAST.
2. MAXIMUM FILL HEIGHT FOR THIS STRUCTURE IS 1.7m

NO.	DATE	REVISION	APPROV.

Texas Department of Transportation
LOOP 1604

CULVERT LAYOUT
STRUCTURE 1,1C

BAIN MEDINA BAIN, INC.
ENGINEERS & SURVEYORS
San Antonio, Texas

Designed	DIST	FED REG	FEDERAL AID PROJECT •			HIGHWAY
Checked	15	6				Lp 1604
Drawn	COUNTY		CONTROL	SECT	JOB	SHEET
Checked	BEXAR		2452	01	035	196

PP1.DWG PLOTTING SCALE: 1000=500
DATE: 04-11-97

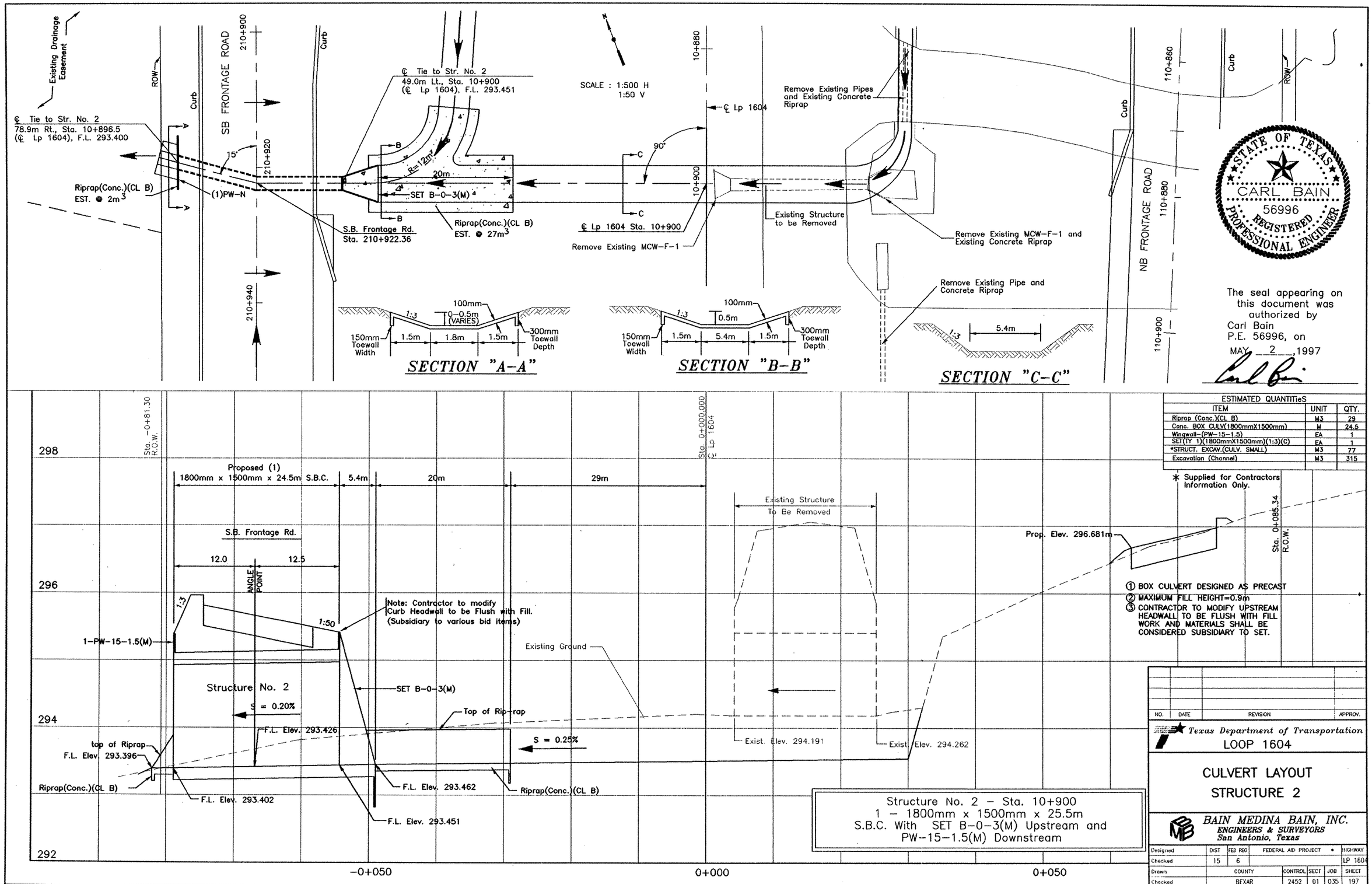

ESTIMATED QUANTITIeS		
ITEM	UNIT	QTY.
Riprap (Conc.)(CL B)	M3	29
Conc. BOX CULV(1800mmX1500mm)	M	24.5
Wingwall-(PW-15-1.5)	EA	1
SET(TY 1)(1800mmX1500mm)(1:3)(C)	EA	1
*STRUCT. EXCAV.(CULV. SMALL)	M3	77
Excavation (Channel)	M3	315

* Supplied for Contractors Information Only.

Structure No. 2 – Sta. 10+900
1 – 1800mm x 1500mm x 25.5m
S.B.C. With SET B-0-3(M) Upstream and
PW-15-1.5(M) Downstream

NO.	DATE	REVISION	APPROV.

Texas Department of Transportation
LOOP 1604

CULVERT LAYOUT
STRUCTURE 2

BAIN MEDINA BAIN, INC.
ENGINEERS & SURVEYORS
San Antonio, Texas

Designed	DIST	FED REC	FEDERAL AID PROJECT •	HIGHWAY
Checked	15	6		LP 1604

Drawn	COUNTY	CONTROL	SECT	JOB	SHEET
Checked	BEXAR	2452	01	035	197

PP2.DWG PLOTTING SCALE: 1000=500
DATE: 04-11-97

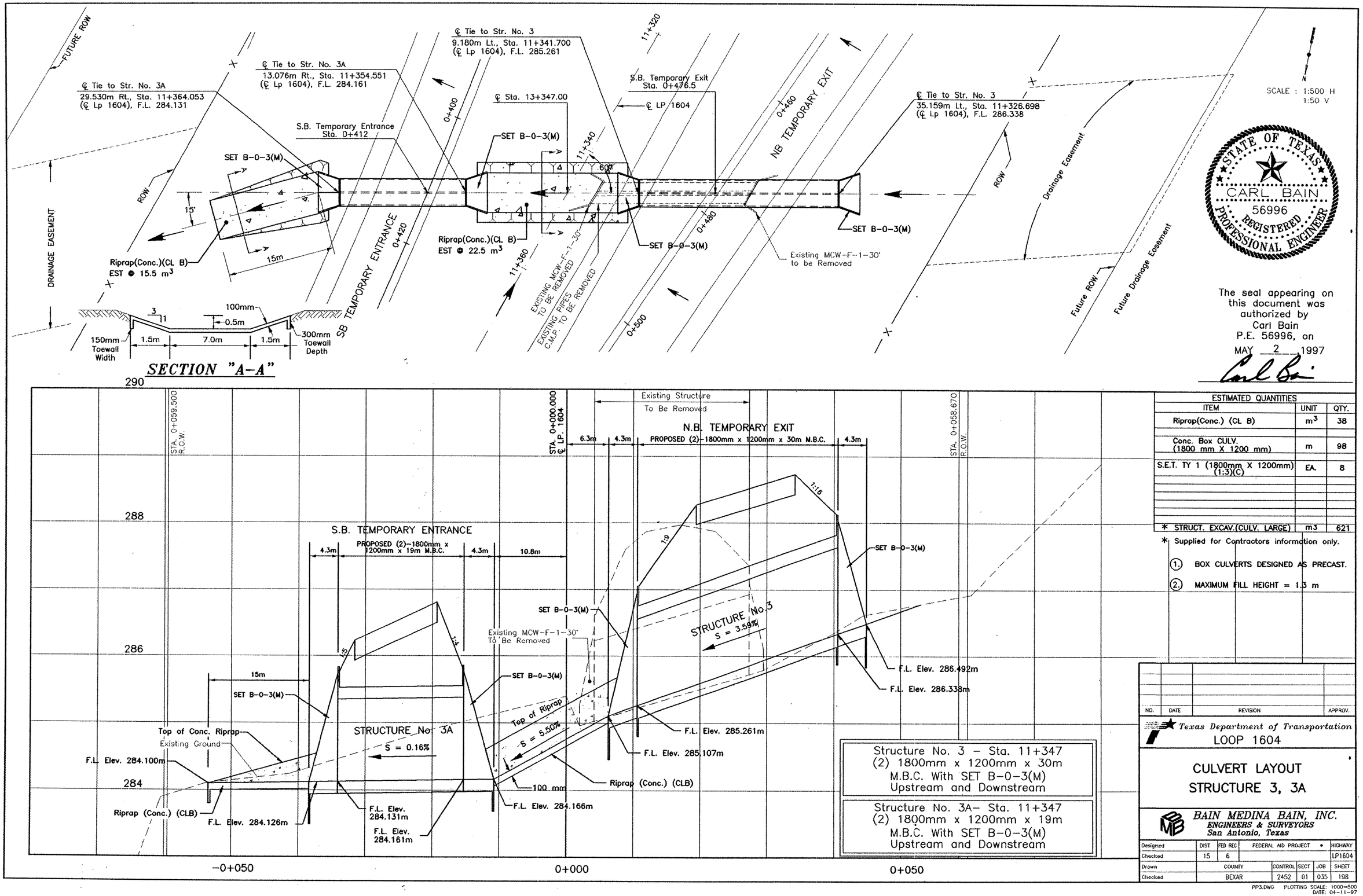

STATE OF TEXAS
CARL BAIN
56996
REGISTERED
PROFESSIONAL ENGINEER

The seal appearing on this document was authorized by Carl Bain P.E. 56996, on MAY 2 1997

Carl Bain

ESTIMATED QUANTITIES		
ITEM	UNIT	QTY.
Riprap(Conc.) (CL B)	m³	38
Conc. Box CULV. (1800 mm X 1200 mm)	m	98
S.E.T. TY 1 (1800mm X 1200mm) (1:3)(C)	EA.	8
* STRUCT. EXCAV.(CULV. LARGE)	m3	621

* Supplied for Contractors information only.

1. BOX CULVERTS DESIGNED AS PRECAST.
2. MAXIMUM FILL HEIGHT = 1.3 m

Structure No. 3 – Sta. 11+347
(2) 1800mm x 1200mm x 30m
M.B.C. With SET B-0-3(M)
Upstream and Downstream

Structure No. 3A– Sta. 11+347
(2) 1800mm x 1200mm x 19m
M.B.C. With SET B-0-3(M)
Upstream and Downstream

NO.	DATE	REVISION	APPROV.

Texas Department of Transportation
LOOP 1604

CULVERT LAYOUT
STRUCTURE 3, 3A

BAIN MEDINA BAIN, INC.
ENGINEERS & SURVEYORS
San Antonio, Texas

Designed	DIST	FED REG	FEDERAL AID PROJECT •			HIGHWAY
Checked	15	6				LP1604
Drawn	COUNTY		CONTROL	SECT	JOB	SHEET
Checked	BEXAR		2452	01	035	198

PP3.DWG PLOTTING SCALE: 1000=500
DATE: 04-11-97

INLET APRON DETAIL FOR I-TY 3A (Drop)

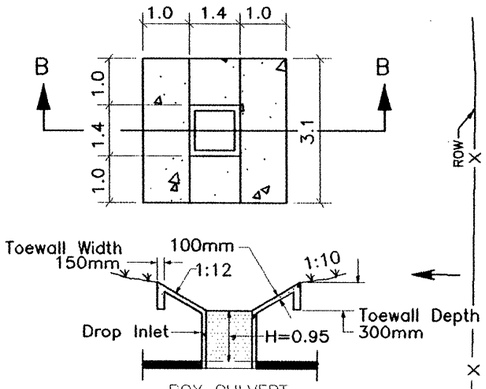

SECTION B-B

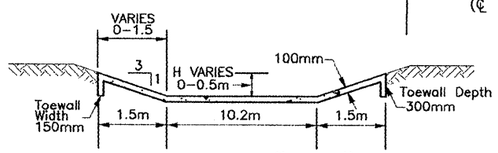

SECTION "A-A"

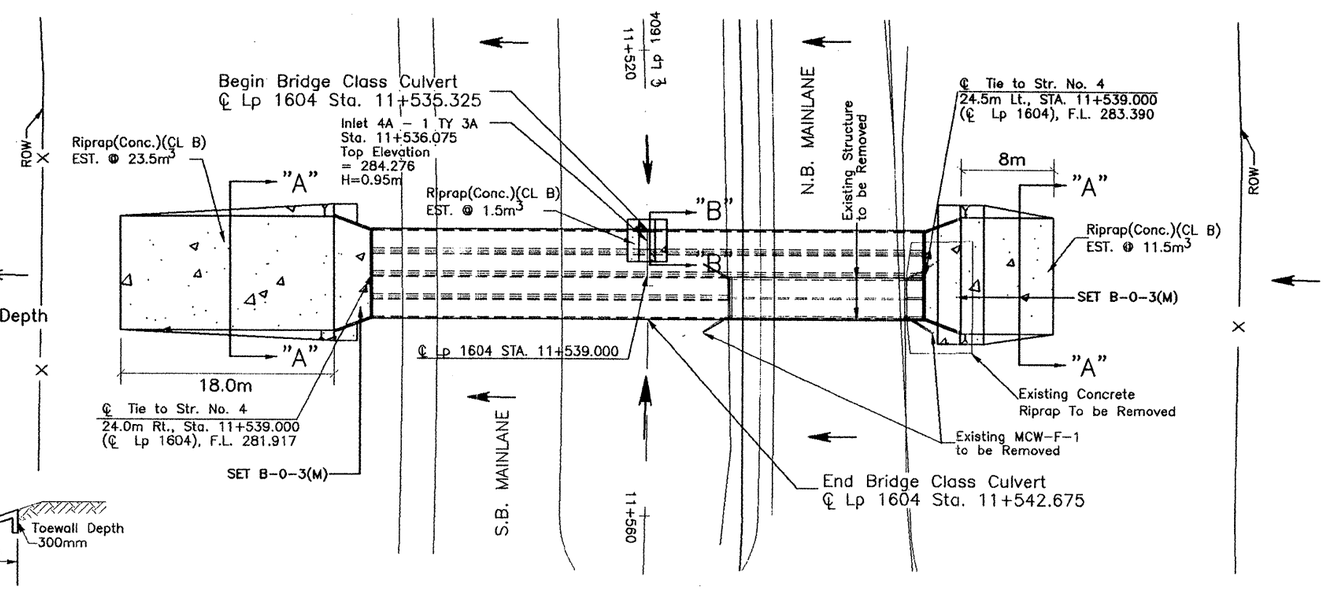

SCALE : 1:500m H
1:50m V

STATE OF TEXAS
CARL BAIN
56996
REGISTERED
PROFESSIONAL ENGINEER

The seal appearing on this document was authorized by Carl Bain P.E. 56996, on MAY 2 1997

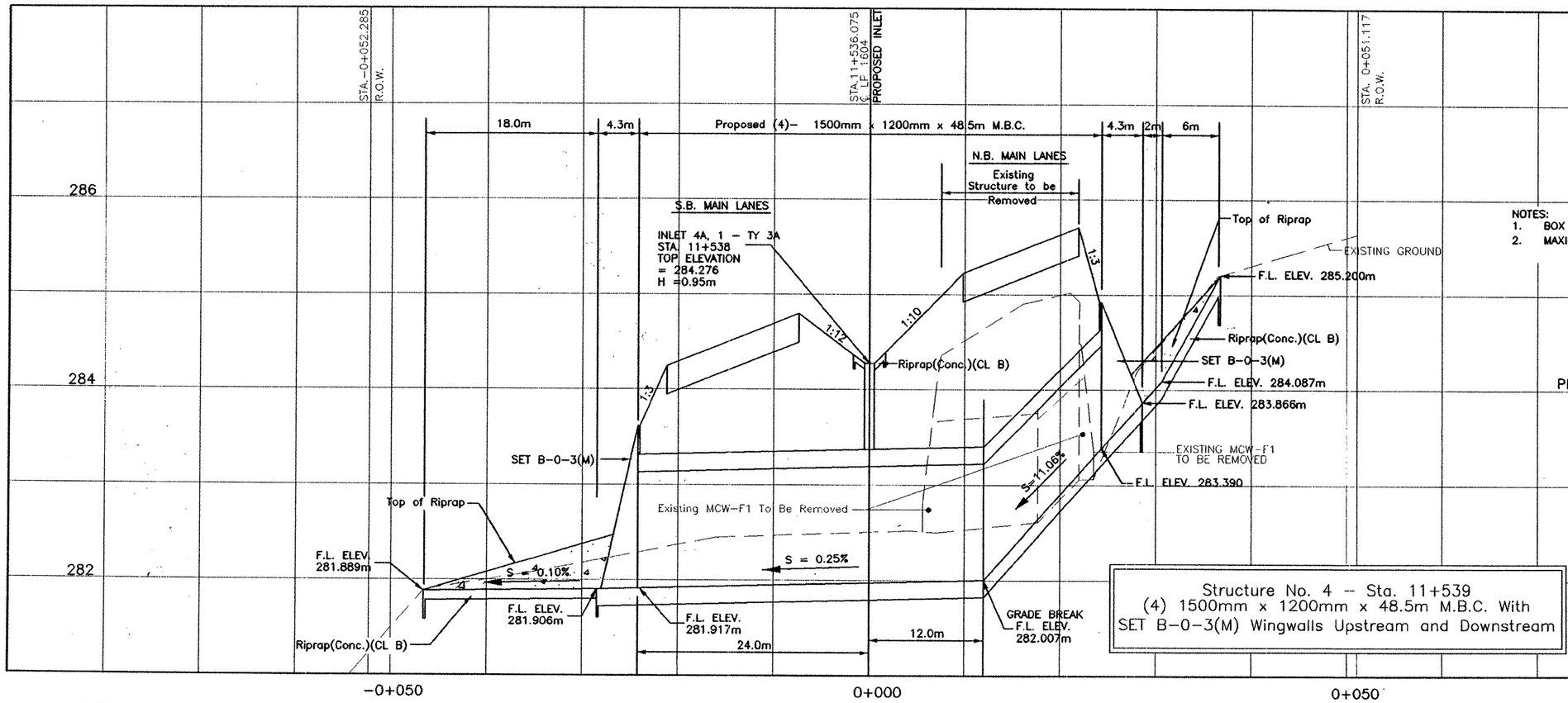

ESTIMATED QUANTITIES		
ITEM	UNIT	QTY.
Riprap (Conc.) (CLB)	m³	36.5
CONC. BOX CULV. (1500 mm X 1200 mm)	m	194
INLET (Compl.)(Drop)(TY 3A)	EA.	1
*Grate (TY 2)	EA.	1
SET(TY1)(1500 mm X 1200 mm) (1:3)(C)	EA.	8*
*Structural Excavation (Culv. Large)	M3	668

* Supplied for Contractors Information Only.

NOTES:
1. BOX CULVERT DESIGN BASED ON PRECAST.
2. MAXIMUM FILL HEIGHT FOR THIS STRUCTURE IS 2.1m.

PERM. STRUCTURE No. 15-015-2452-01-159

Structure No. 4 -- Sta. 11+539
(4) 1500mm x 1200mm x 48.5m M.B.C. With
SET B-0-3(M) Wingwalls Upstream and Downstream

NO.	DATE	REVISION	APPROV.

Texas Department of Transportation
LOOP 1604

BRIDGE CLASS
CULVERT LAYOUT
STRUCTURE 4

BAIN MEDINA BAIN, INC.
ENGINEERS & SURVEYORS
San Antonio, Texas

Designed	DIST	FED REG	FEDERAL AID PROJECT •			HIGHWAY
Checked	15	6				LP 1604
Drawn	COUNTY		CONTROL	SECT	JOB	SHEET
Checked	BEXAR		2452	01	035	199

PP-4.DWG PLOTTING SCALE: 1000=500
DATE: 04-11-97

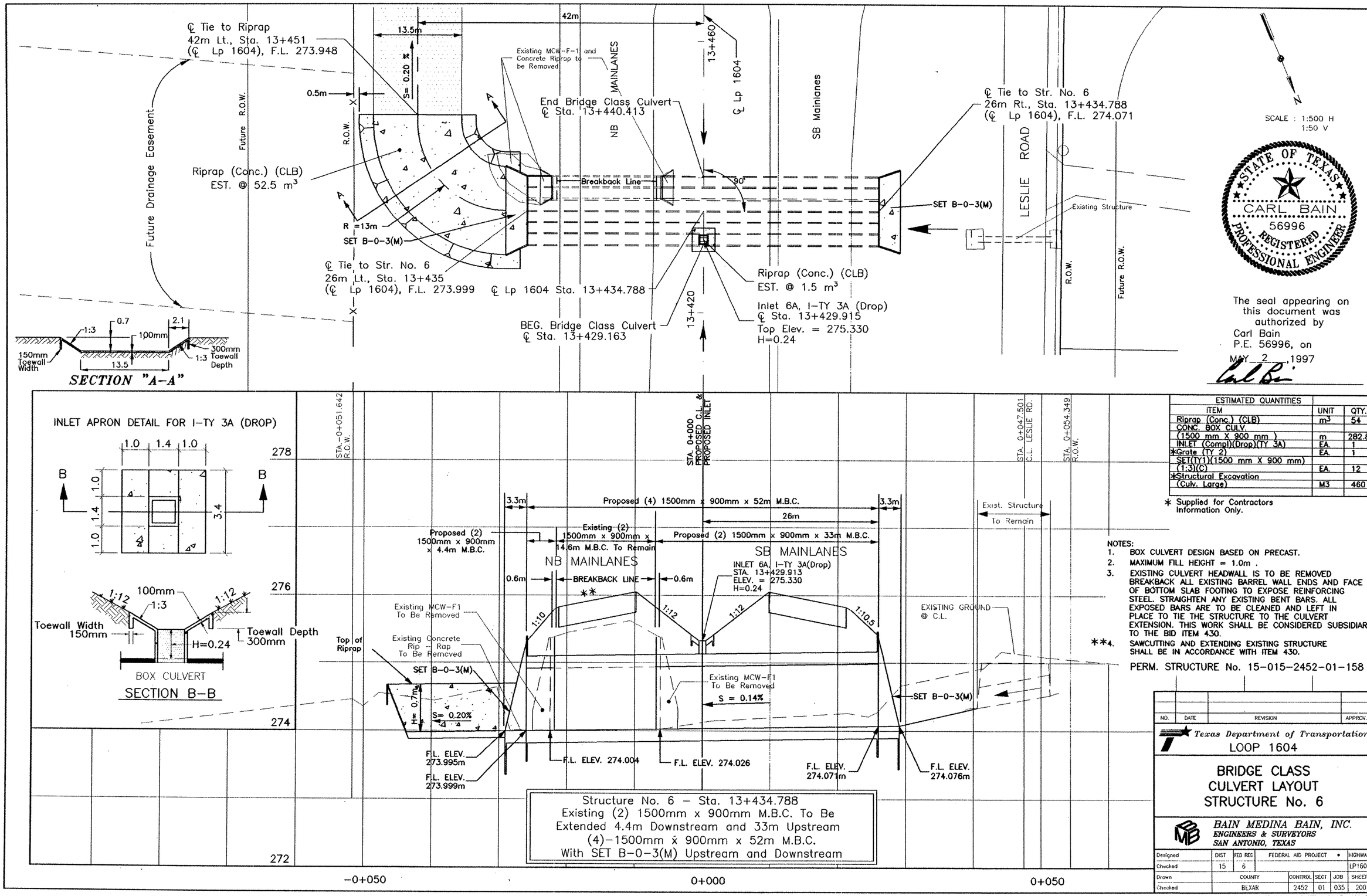

Structure No. 6 – Sta. 13+434.788
Existing (2) 1500mm x 900mm M.B.C. To Be Extended 4.4m Downstream and 33m Upstream
(4)-1500mm x 900mm x 52m M.B.C.
With SET B-0-3(M) Upstream and Downstream

ESTIMATED QUANTITIES		
ITEM	UNIT	QTY.
Riprap (Conc.) (CLB)	m³	54
CONC. BOX CULV. (1500 mm X 900 mm)	m	282.8
INLET (Compl)(Drop)(TY 3A)	EA.	1
*Grate (TY 2) SET(TY1)(1500 mm X 900 mm) (1:3)(C)	EA.	1
	EA.	12
*Structural Excavation (Culv. Large)	M3	460

* Supplied for Contractors Information Only.

NOTES:
1. BOX CULVERT DESIGN BASED ON PRECAST.
2. MAXIMUM FILL HEIGHT = 1.0m .
3. EXISTING CULVERT HEADWALL IS TO BE REMOVED BREAKBACK ALL EXISTING BARREL WALL ENDS AND FACE OF BOTTOM SLAB FOOTING TO EXPOSE REINFORCING STEEL. STRAIGHTEN ANY EXISTING BENT BARS. ALL EXPOSED BARS ARE TO BE CLEANED AND LEFT IN PLACE TO TIE THE STRUCTURE TO THE CULVERT EXTENSION. THIS WORK SHALL BE CONSIDERED SUBSIDIARY TO THE BID ITEM 430.

**4. SAWCUTTING AND EXTENDING EXISTING STRUCTURE SHALL BE IN ACCORDANCE WITH ITEM 430.

PERM. STRUCTURE No. 15-015-2452-01-158

NO.	DATE	REVISION	APPROV.

Texas Department of Transportation
LOOP 1604

BRIDGE CLASS CULVERT LAYOUT STRUCTURE No. 6

BAIN MEDINA BAIN, INC.
ENGINEERS & SURVEYORS
SAN ANTONIO, TEXAS

Designed	DIST	FED REG	FEDERAL AID PROJECT •	HIGHWAY
Checked	15	6		LP1604

Drawn	COUNTY	CONTROL	SECT	JOB	SHEET
Checked	BEXAR	2452	01	035	200

PP-6.DWG PLOTTING SCALE: 1000=500
DATE: 04-11-97

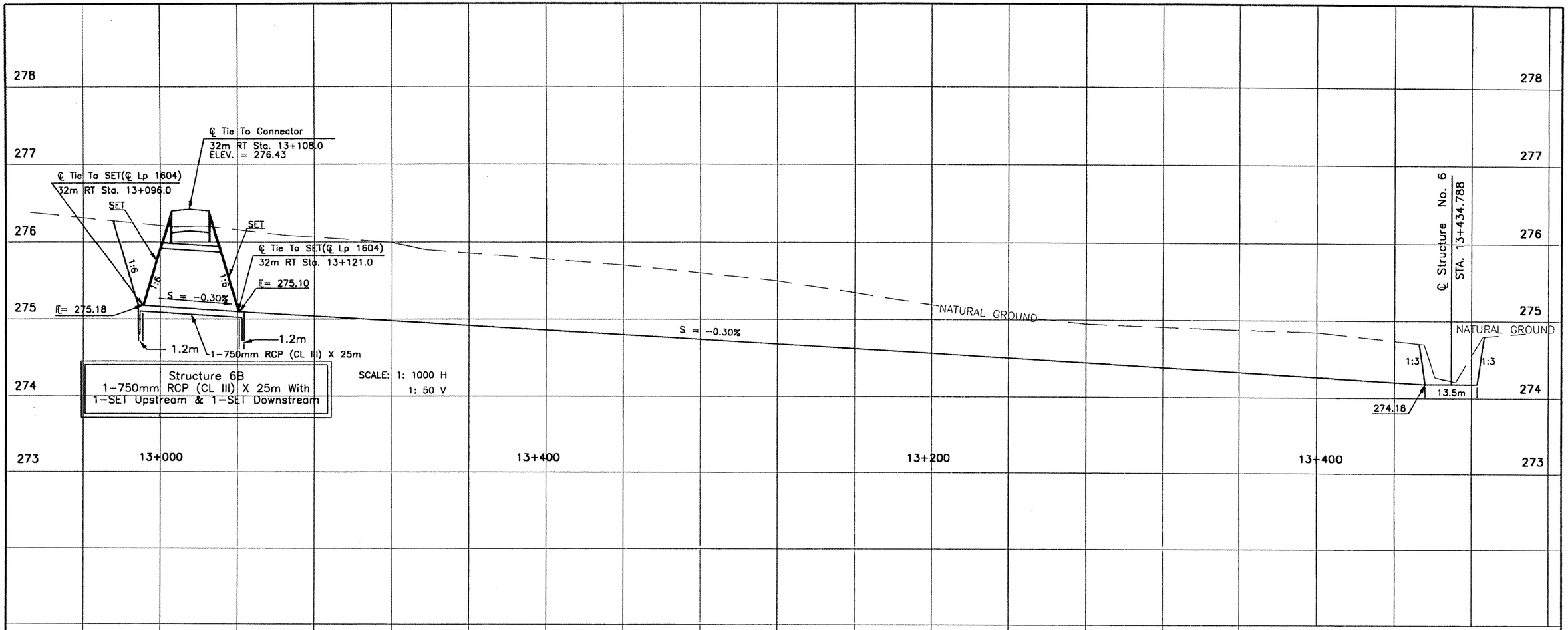

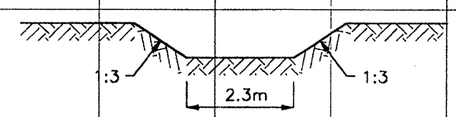

Structure 6B
Downstream Channel Section

ESTIMATED QUANTITIES – SHEET TOTAL		
ITEM	UNIT	STRUCTURE NO. 6B QUANTITY
Channel Excavation	M3	1218
RCP (CL III)(750mm)	M	25
# SET(TYII)(750mm)(RCP)(1:6)	EA	2
* Struct.Excav.(culvert small)	M3	46

Paid under Item 467-5071 SET(1:3)
* Supplied for Contractors Information Only.
New Sheet

Change Order #21

STATE OF TEXAS
CARL BAIN
56996
REGISTERED
PROFESSIONAL ENGINEER

The seal appearing on this document was originally authorized by Carl Bain P.E. 56996, on FEB 23, 1998

NO.	DATE	REVISION	APPROV.

Texas Department of Transportation
LOOP 1604

CULVERT SECTION
STRUCTURE 6B

BAIN MEDINA BAIN, INC.
ENGINEERS & SURVEYORS
San Antonio, Texas

Designed	DIST	FED REG	FEDERAL AID PROJECT			HIGHWAY
Checked	15	6				LP1604
Drawn	COUNTY		CONTROL	SECT	JOB	SHEET
Checked	BEXAR		2452	01	035	200A

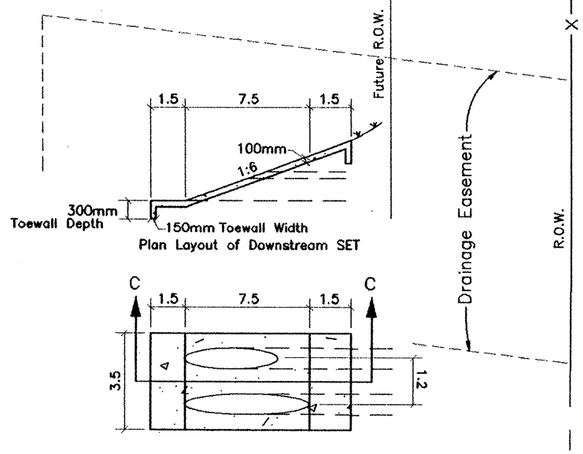

SEC C–C

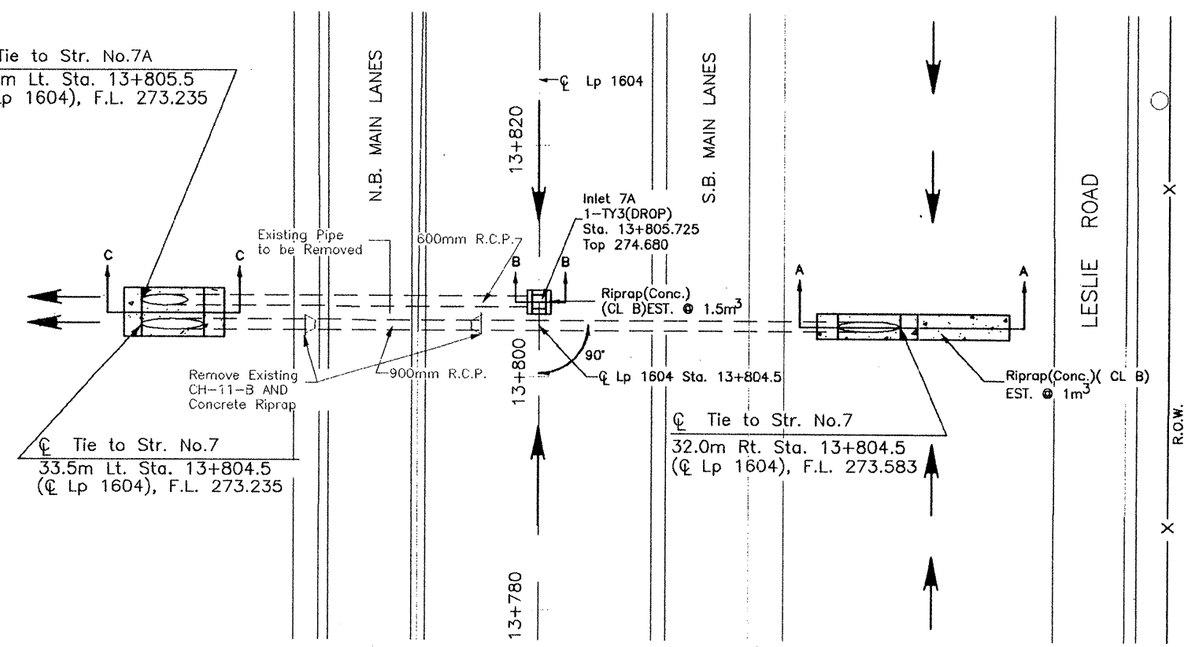

SCALE : 1:500m H.
1:50m V.

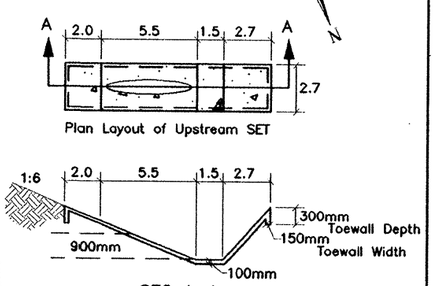

Plan Layout of Upstream SET

SEC A–A

ESTIMATED QUANTITIES		
ITEM	UNIT	QTY.
RC PIPE (CL III)(600mm)	M	33.5
RC PIPE(CL III)(900mm)	M	65.5
SET(TY II)(900mm)(RCP)(1:6)	EA	1
SET(TY II)(900mm)(RCP)(1:6)	EA	2
Riprap(Conc.)(CL B)	M3	2.5
INLET(COMPL)(TY 3)(DROP)	EA	1
* GRATE (TY 2)	EA	1
* STRUCT. EXCAV.(CULV. Small)	M3	198

* SUPPLIED FOR CONTRACTORS INFORMATION ONLY.

INLET APRON DETAIL FOR I–TY 3 (Drop)

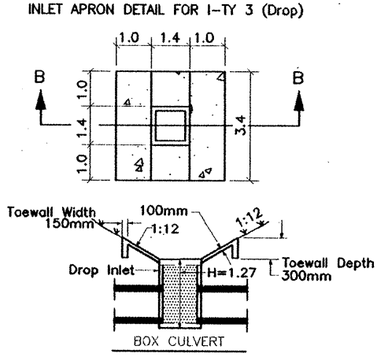

SECTION B–B

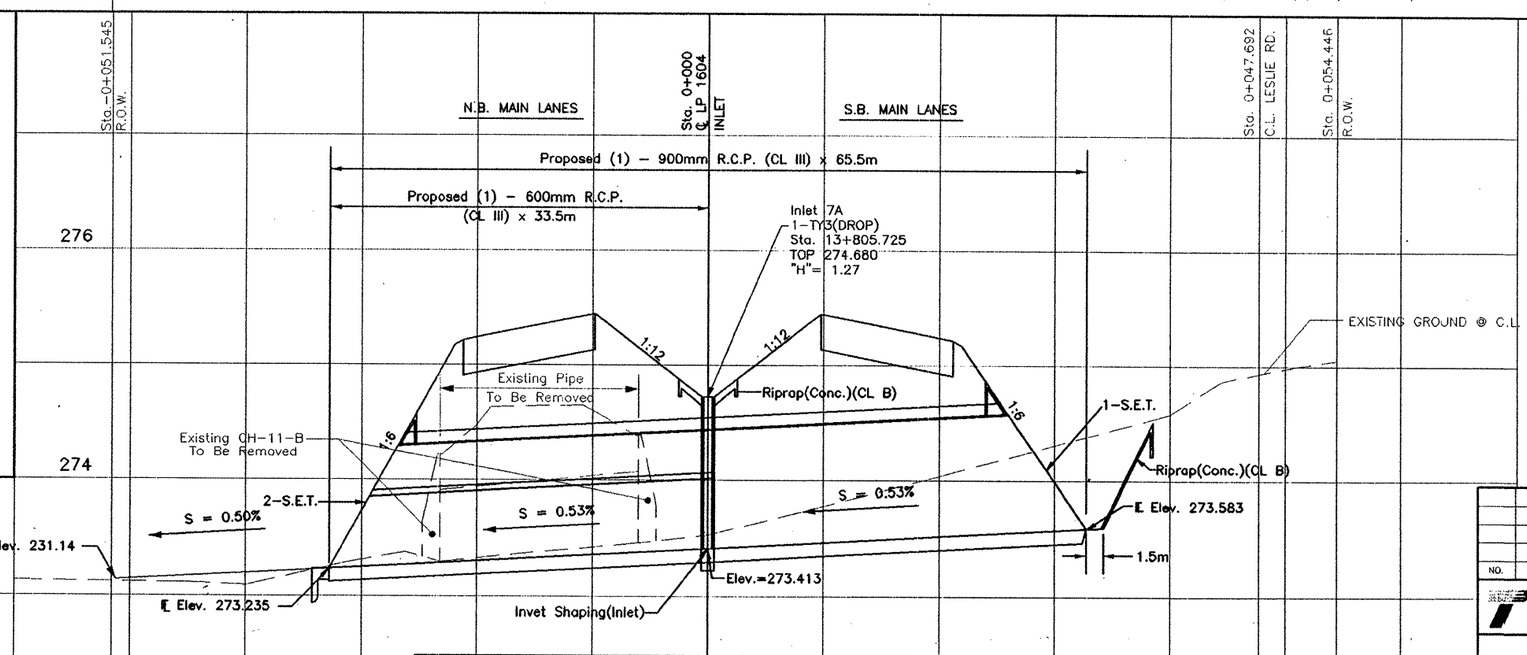

Structure No. 7 – Sta. 13+804.5
(1)–900mm R.C.P. (CL III) x 65.5m
With 1–S.E.T. Upstream and Downstream

Structure No. 7A – Sta. 13+805.725
(1)–600mm R.C.P. (CL III) x 29m With
1–S.E.T. Downstream and 1–TY3(DROP) Inlet Upstream

STATE OF TEXAS
CARL BAIN
56996
REGISTERED
PROFESSIONAL ENGINEER

The seal appearing on this document was authorized by Carl Bain P.E. 56996, on MAY 2, 1997

NO.	DATE	REVISION

Texas Department of Transportation
LOOP 1604

CULVERT LAYOUT
STRUCTURES 7,7A

BAIN MEDINA BAIN, INC.
ENGINEERS & SURVEYORS
San Antonio, Texas

Designed	DIST	FED REG	FEDERAL AID PROJECT •			HIGHWAY
Checked	15	6				LP 1604
Drawn	COUNTY		CONTROL	SECT	JOB	SHEET
Checked	BEXAR		2452	01	035	201

PP7.DWG PLOTTING SCALE: 1000=500
DATE: 04–11–97

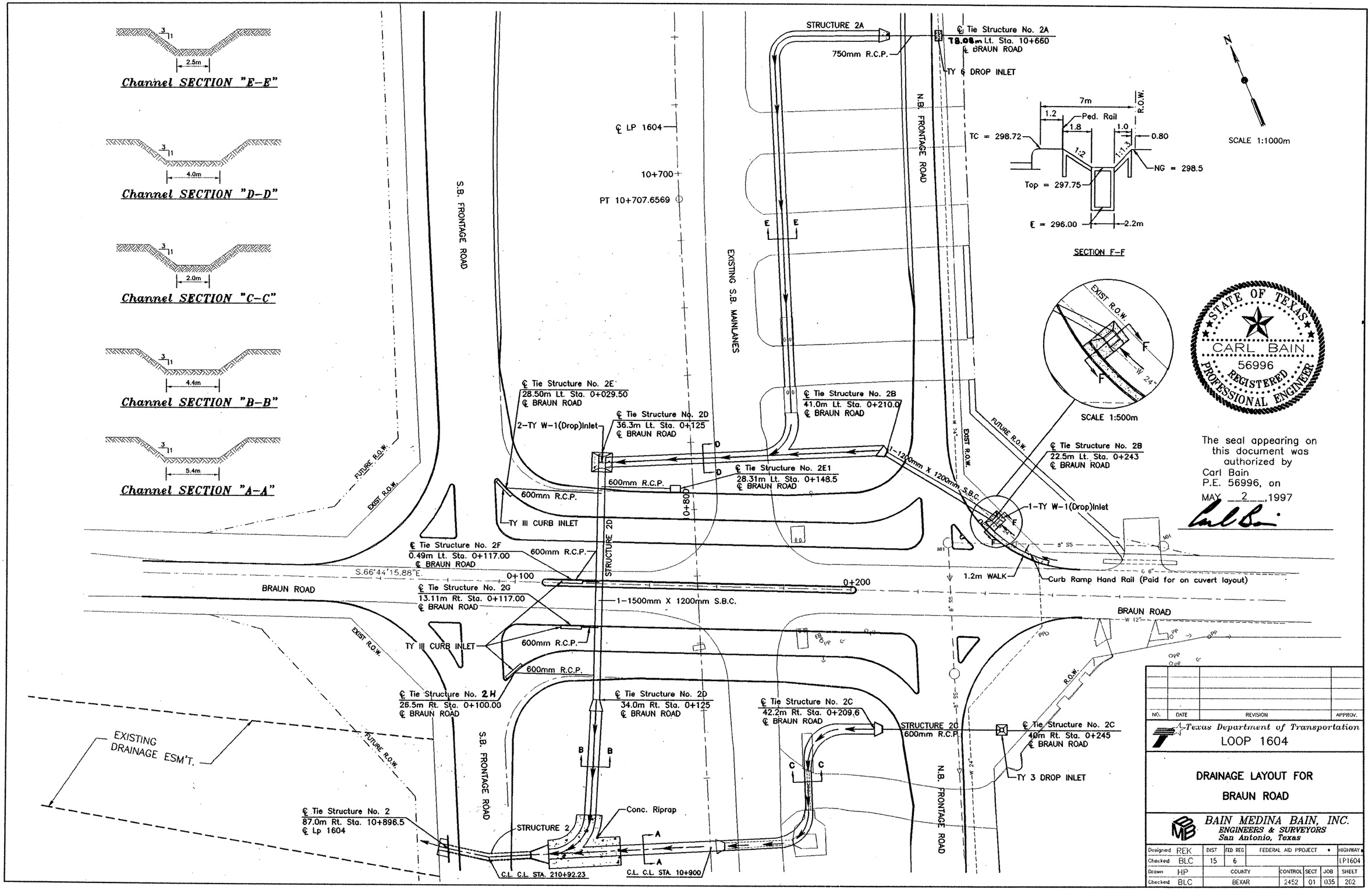
Channel SECTION "E-E"
2.5m
Channel SECTION "D-D"
4.0m
Channel SECTION "C-C"
2.0m
Channel SECTION "B-B"
4.4m
Channel SECTION "A-A"
5.4m
STRUCTURE 2A
750mm R.C.P.
℄ Tie Structure No. 2A
18.06m Lt. Sta. 10+660
℄ BRAUN ROAD
TY G DROP INLET
N.B. FRONTAGE ROAD
7m
R.O.W.
1.2
Ped. Rail
1.8
1.0
0.80
TC = 298.72
1:2
1:1.4
NG = 298.5
Top = 297.75
℄ = 296.00
2.2m
SECTION F-F
SCALE 1:1000m
℄ LP 1604
10+700
PT 10+707.6569
S.B. FRONTAGE ROAD
EXISTING S.B. MAINLANES
EXIST R.O.W.
SCALE 1:500m
STATE OF TEXAS
CARL BAIN
56996
REGISTERED
PROFESSIONAL ENGINEER
The seal appearing on this document was authorized by Carl Bain P.E. 56996, on MAY 2, 1997
℄ Tie Structure No. 2E
28.50m Lt. Sta. 0+029.50
℄ BRAUN ROAD
℄ Tie Structure No. 2D
36.3m Lt. Sta. 0+125
℄ BRAUN ROAD
2-TY W-1(Drop)Inlet
℄ Tie Structure No. 2B
41.0m Lt. Sta. 0+210.0
℄ BRAUN ROAD
FUTURE R.O.W.
℄ Tie Structure No. 2B
22.5m Lt. Sta. 0+243
℄ BRAUN ROAD
1-1200mm X 1200mm S.B.C.
℄ Tie Structure No. 2E1
28.31m Lt. Sta. 0+148.5
℄ BRAUN ROAD
600mm R.C.P.
10+800
TY III CURB INLET
1-TY W-1(Drop)Inlet
℄ Tie Structure No. 2F
0.49m Lt. Sta. 0+117.00
℄ BRAUN ROAD
STRUCTURE 2D
S.66°44'15.88"E.
0+100
0+200
1.2m WALK
Curb Ramp Hand Rail (Paid for on cuvert layout)
BRAUN ROAD
℄ Tie Structure No. 2G
13.11m Rt. Sta. 0+117.00
℄ BRAUN ROAD
1-1500mm X 1200mm S.B.C.
℄ Tie Structure No. 2H
26.5m Rt. Sta. 0+100.00
℄ BRAUN ROAD
℄ Tie Structure No. 2D
34.0m Rt. Sta. 0+125
℄ BRAUN ROAD
℄ Tie Structure No. 2C
42.2m Rt. Sta. 0+209.6
℄ BRAUN ROAD
STRUCTURE 2C
600mm R.C.P.
℄ Tie Structure No. 2C
40m Rt. Sta. 0+245
℄ BRAUN ROAD
TY 3 DROP INLET
EXISTING DRAINAGE ESM'T.
℄ Tie Structure No. 2
87.0m Rt. Sta. 10+896.5
℄ Lp 1604
STRUCTURE 2
Conc. Riprap
C.L. C.L. STA. 210+92.23
C.L. C.L. STA. 10+900
NO. DATE REVISION APPROV.
Texas Department of Transportation
LOOP 1604
DRAINAGE LAYOUT FOR
BRAUN ROAD
BAIN MEDINA BAIN, INC.
ENGINEERS & SURVEYORS
San Antonio, Texas
Designed REK
Checked BLC
Drawn HP
Checked BLC
DIST 15
FED REG 6
FEDERAL AID PROJECT
HIGHWAY LP1604
COUNTY BEXAR
CONTROL 2452
SECT 01
JOB 035
SHEET 202
DRN-LAY.DWG PLOTTING SCALE: 1000=1000
DATE: 04-28-97

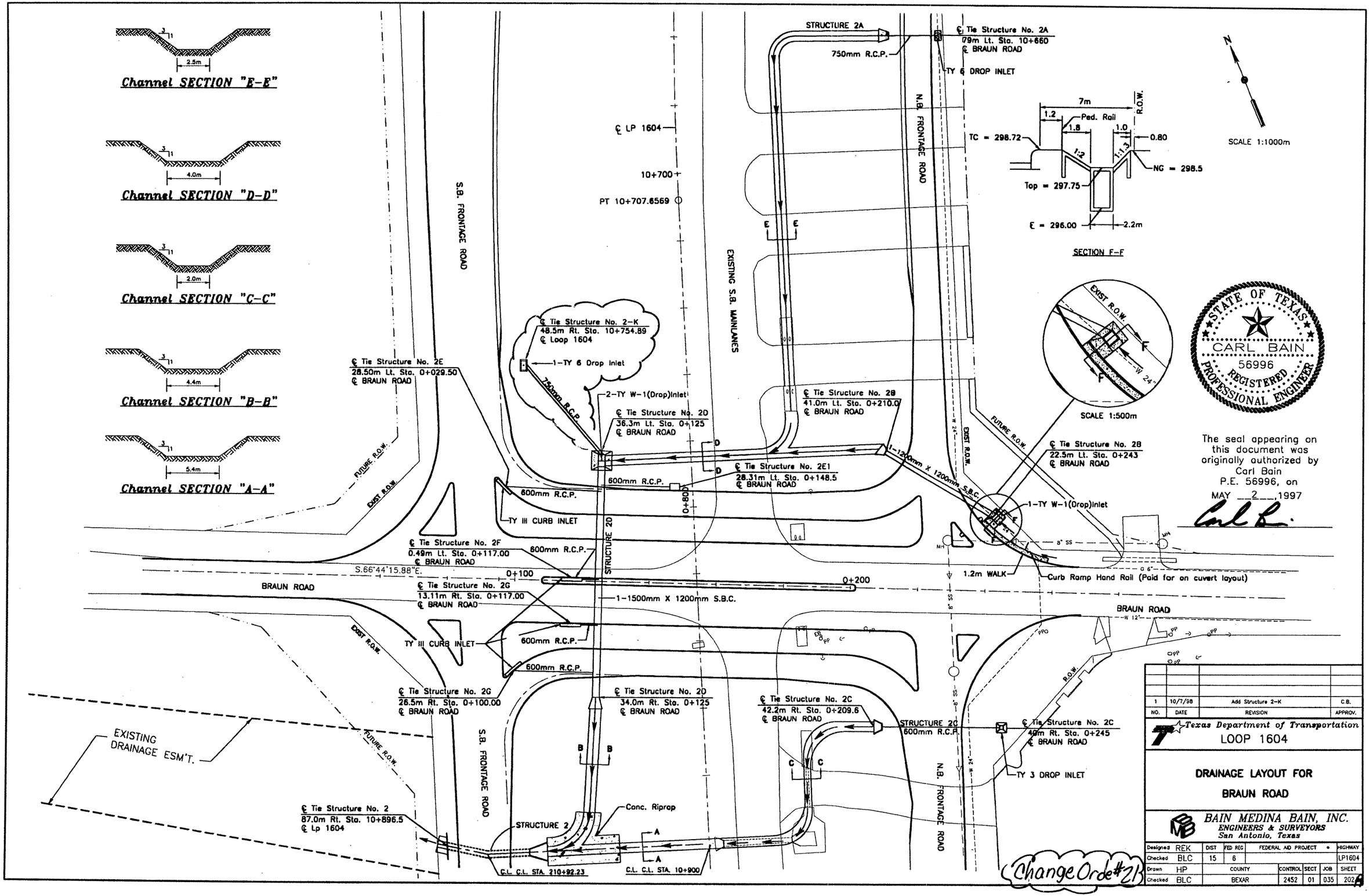
Channel SECTION "E-E"
2.5m
Channel SECTION "D-D"
4.0m
Channel SECTION "C-C"
2.0m
Channel SECTION "B-B"
4.4m
Channel SECTION "A-A"
5.4m
STRUCTURE 2A
750mm R.C.P.
℄ Tie Structure No. 2A
79m Lt. Sta. 10+660
℄ BRAUN ROAD
TY 6 DROP INLET
N.B. FRONTAGE ROAD
7m
1.2
Ped. Rail
1.8
1.0
R.O.W.
0.80
TC = 298.72
1:2
1:1.3
NG = 298.5
Top = 297.75
E = 296.00
2.2m
SECTION F-F
SCALE 1:1000m
SCALE 1:500m
EXIST. R.O.W.
W 24'
℄ LP 1604
10+700
PT 10+707.6569
S.B. FRONTAGE ROAD
EXISTING S.B. MAINLANES
℄ Tie Structure No. 2-K
48.5m Rt. Sta. 10+754.89
℄ Loop 1604
1-TY 6 Drop Inlet
750mm R.C.P.
2-TY W-1(Drop)Inlet
℄ Tie Structure No. 2E
28.50m Lt. Sta. 0+029.50
℄ BRAUN ROAD
℄ Tie Structure No. 2D
36.3m Lt. Sta. 0+125
℄ BRAUN ROAD
℄ Tie Structure No. 2B
41.0m Lt. Sta. 0+210.0
℄ BRAUN ROAD
℄ Tie Structure No. 2B
22.5m Lt. Sta. 0+243
℄ BRAUN ROAD
1-1200mm X 1200mm S.B.C.
℄ Tie Structure No. 2E1
28.31m Lt. Sta. 0+148.5
℄ BRAUN ROAD
600mm R.C.P.
0+800
TY III CURB INLET
1-TY W-1(Drop)Inlet
FUTURE R.O.W.
EXIST. R.O.W.
STRUCTURE 2D
℄ Tie Structure No. 2F
0.49m Lt. Sta. 0+117.00
℄ BRAUN ROAD
S.66°44'15.88"E.
0+100
0+200
BRAUN ROAD
℄ Tie Structure No. 2G
13.11m Rt. Sta. 0+117.00
℄ BRAUN ROAD
1-1500mm X 1200mm S.B.C.
1.2m WALK
Curb Ramp Hand Rail (Paid for on cuvert layout)
8" SS
6"
MH
W 12'
℄ Tie Structure No. 2G
26.5m Rt. Sta. 0+100.00
℄ BRAUN ROAD
℄ Tie Structure No. 2D
34.0m Rt. Sta. 0+125
℄ BRAUN ROAD
℄ Tie Structure No. 2C
42.2m Rt. Sta. 0+209.6
℄ BRAUN ROAD
STRUCTURE 2C
600mm R.C.P.
℄ Tie Structure No. 2C
40m Rt. Sta. 0+245
℄ BRAUN ROAD
TY 3 DROP INLET
EXISTING DRAINAGE ESM'T.
℄ Tie Structure No. 2
87.0m Rt. Sta. 10+896.5
℄ Lp 1604
STRUCTURE 2
Conc. Riprap
C.L. C.L. STA. 210+92.23
C.L. C.L. STA. 10+900
Change Order #21
STATE OF TEXAS
CARL BAIN
56996
REGISTERED
PROFESSIONAL ENGINEER
The seal appearing on this document was originally authorized by Carl Bain P.E. 56996, on MAY 2 1997
Texas Department of Transportation
LOOP 1604
DRAINAGE LAYOUT FOR
BRAUN ROAD
BAIN MEDINA BAIN, INC.
ENGINEERS & SURVEYORS
San Antonio, Texas
1 10/7/98 Add Structure 2-K C.B.
NO. DATE REVISION APPROV.
Designed REK
Checked BLC
Drawn HP
Checked BLC
DIST 15
FED. RD. 6
FEDERAL AID PROJECT
HIGHWAY LP1604
COUNTY BEXAR
CONTROL 2452
SECT 01
JOB 035
SHEET 202

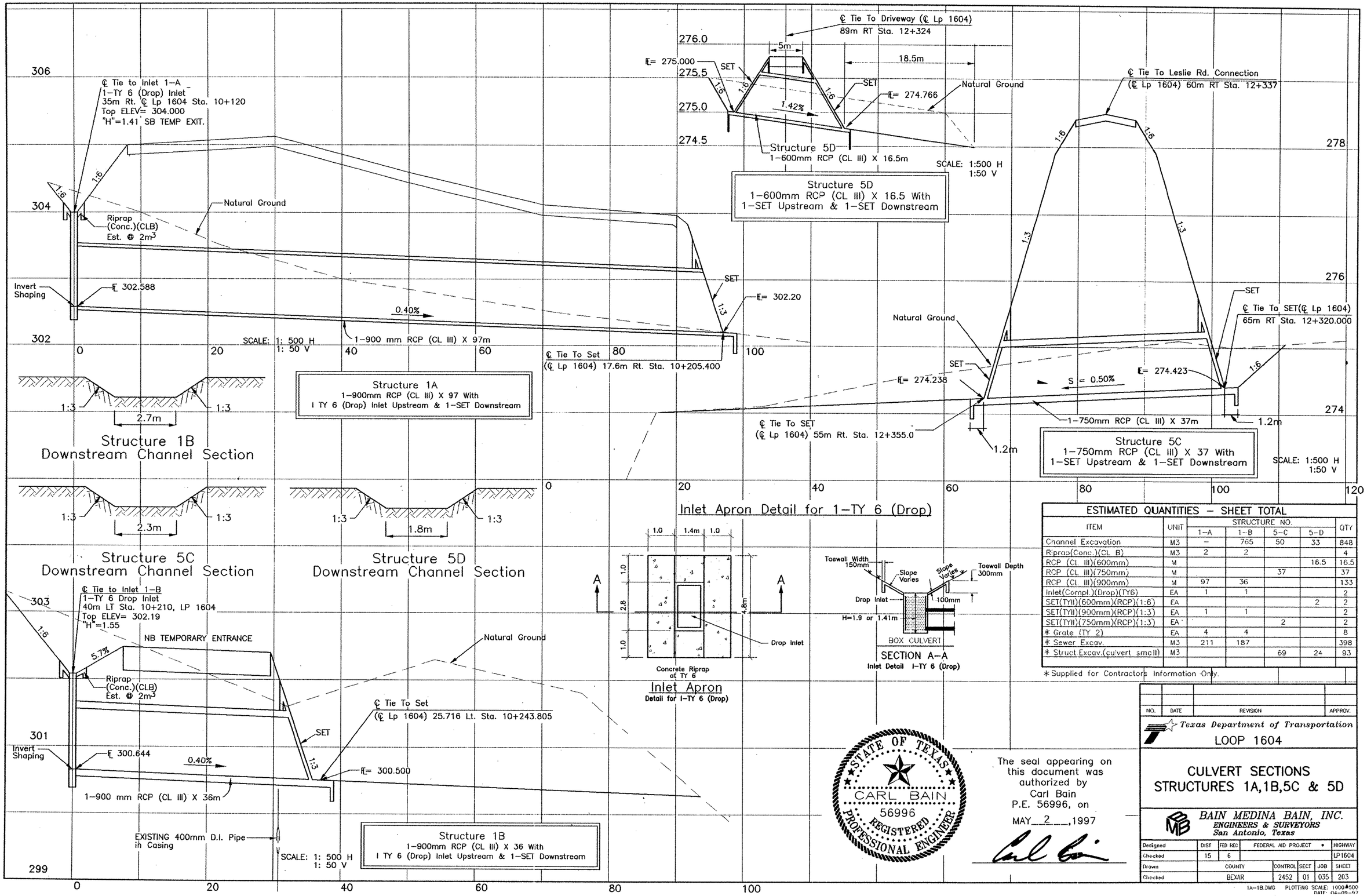

The seal appearing on this document was authorized by Carl Bain P.E. 56996, on MAY 2, 1997

ESTIMATED QUANTITIES – SHEET TOTAL

ITEM	UNIT	STRUCTURE NO. 1-A	1-B	5-C	5-D	QTY
Channel Excavation	M3	–	765	50	33	848
Riprap(Conc.)(CL B)	M3	2	2			4
RCP (CL III)(600mm)	M				16.5	16.5
RCP (CL III)(750mm)	M			37		37
RCP (CL III)(900mm)	M	97	36			133
Inlet(Compl.)(Drop)(TY6)	EA	1	1			2
SET(TYII)(600mm)(RCP)(1:6)	EA				2	2
SET(TYII)(900mm)(RCP)(1:3)	EA	1	1			2
SET(TYII)(750mm)(RCP)(1:3)	EA			2		2
* Grate (TY 2)	EA	4	4			8
* Sewer Excav.	M3	211	187			398
* Struct Excav.(culvert small)	M3			69	24	93

* Supplied for Contractors Information Only.

NO.	DATE	REVISION	APPROV.

Texas Department of Transportation

LOOP 1604

CULVERT SECTIONS STRUCTURES 1A,1B,5C & 5D

BAIN MEDINA BAIN, INC.
ENGINEERS & SURVEYORS
San Antonio, Texas

Designed	DIST	FED REG	FEDERAL AID PROJECT •			HIGHWAY
Checked	15	6				LP1604
Drawn	COUNTY		CONTROL	SECT	JOB	SHEET
Checked	BEXAR		2452	01	035	203

1A-1B.DWG PLOTTING SCALE: 1000:500
DATE: 04-09-97

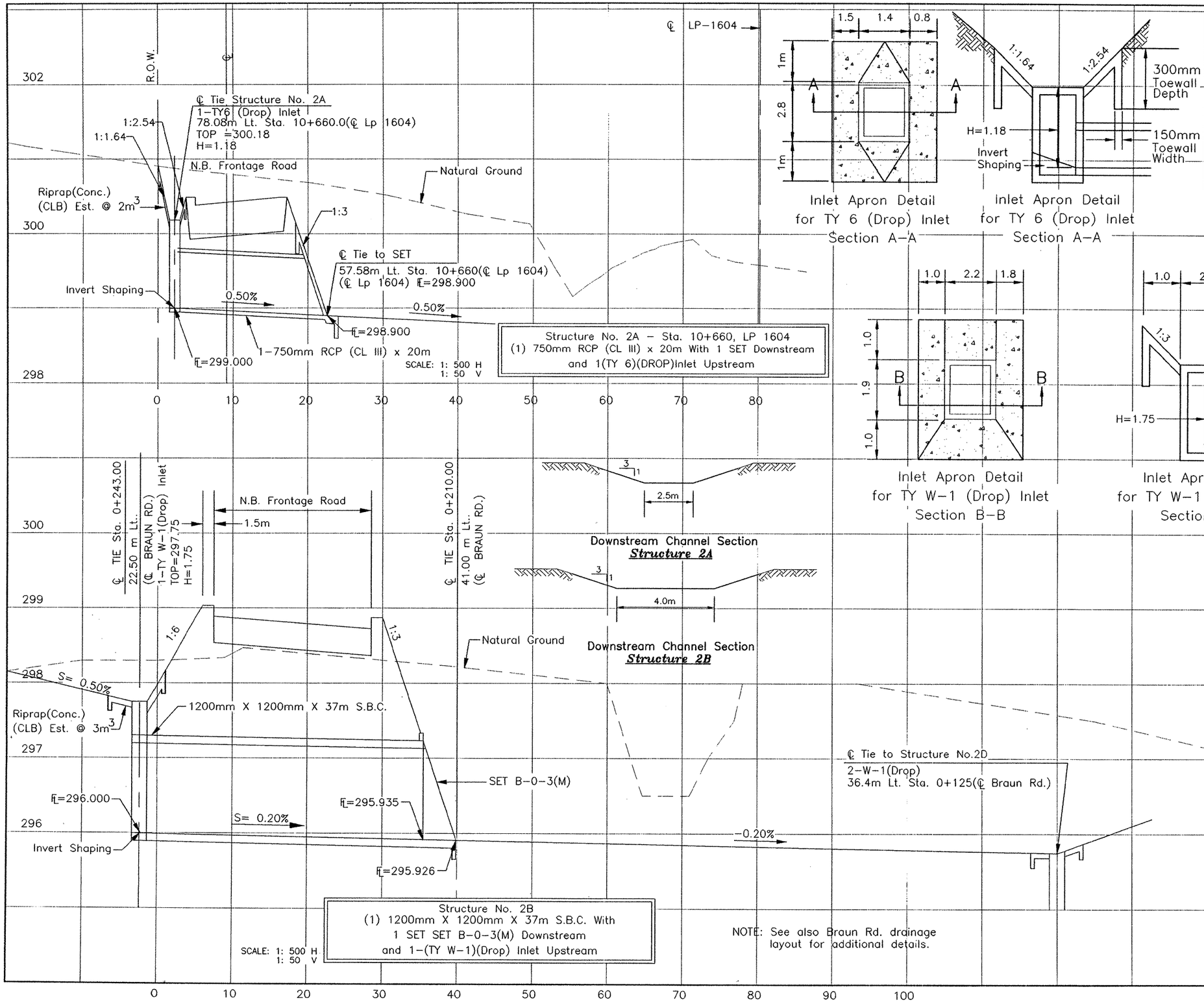

ESTIMATED QUANTITIES - SHEET TOTAL

ITEM	UNIT	STRUCTURE NO. 2-A	STRUCTURE NO. 2-B		QTY
Channel Excavation	m^3	530	1008		1538
Riprap (Conc.)(CLB)	m^3	2	3		5
RC Pipe (CL III)(750mm)	m	20			20
Conc. Box Culv.(1200mmX1200mm)	m		37		37
Inlet (COMPL)(DROP)(TY6)	EA	1			1
Inlet (COMPL)(DROP)(TY W-1)	EA		1		1
SET(TYII)(750mm)(RCP)(1:3)	EA	1			1
SET(TYI)(1200mmX1200mm)(1:3)C	EA		1		1
*Grate (TY 2)	EA	4			4
*Grate (TY 4)	EA		1		1
*Sewer Excav.	m^3	42			42
*Struct. Excav. (Culv. Small)	m^3		119		119
Curb Ramp Hand Rail	m		25		25

*Supplied for Contractors Information Only.

STATE OF TEXAS
CARL BAIN
56996
REGISTERED
PROFESSIONAL ENGINEER

The seal appearing on this document was authorized by Carl Bain P.E. 56996, on JUNE 5 1997

NO.	DATE	REVISION	APPROV.

Texas Department of Transportation
LOOP 1604

CULVERT SECTIONS STRUCTURES 2A AND 2B

BAIN MEDINA BAIN, INC.
ENGINEERS & SURVEYORS
San Antonio, Texas

Designed	DIST	FED REG	FEDERAL AID PROJECT		HIGHWAY
Checked	15	6	CDR452-1-35		LP 1604
Drawn	COUNTY		CONTROL	SECT	JOB	SHEET
Checked	BEXAR		2452	01	035	204

2A-2B.DWG PLOTTING SCALE: 1000=500
DATE: 04-28-97

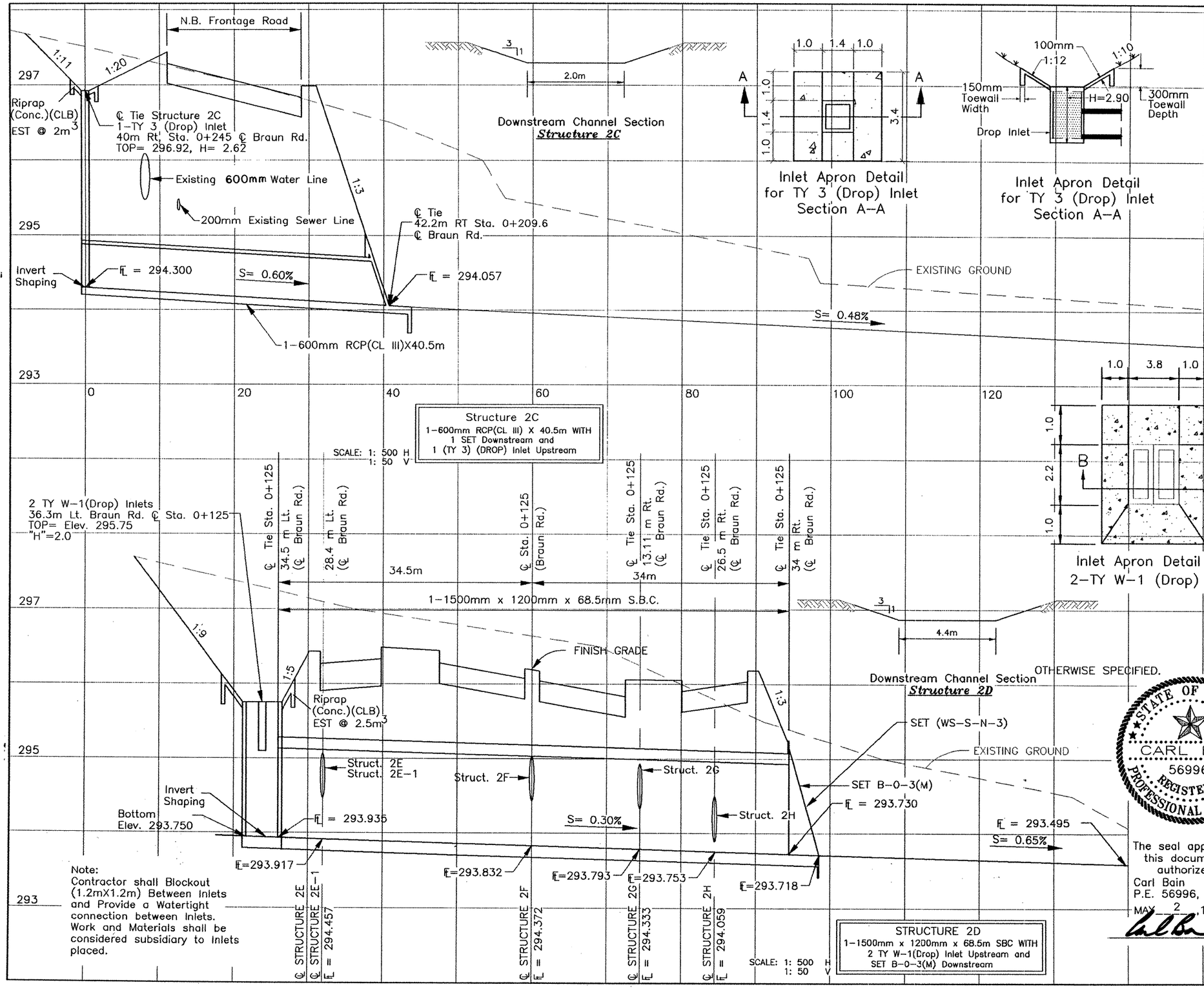

ESTIMATED QUANTITIeS – SHEET TOTAL

ITEM	UNIT	STRUCTURE NO. 2-C	STRUCTURE NO. 2-D	QTY
*Sewer Excav.	m^3	174		174
Excavation (Channel)	m^3	450	444	894
Riprap (Conc.)(CLB)	m^3	2	2.5	4.5
RC Pipe (CL III)(600mm)	m	40.5		40.5
Inlet(Compl.)(Drop)(TY 3)	EA	1		1
Inlet(Compl.)(Drop)(TY W-1)	EA		2	2
SET(TYII)(600mm)(RCP)(1:3)	EA	1		1*
SET (TYI) (1500mm x 1200mm)(1:3)C	EA		1	1
*Grate (TY 2)	EA	1		1
*Grate (TY 4)	EA		2	2
*Struct. Excav.(Small Culv.)	m^3		527	527
Conc. Box Culv. (1500mmX1200mm)	m		68.5	68.5

*Supplied for Contractors Information Only.

NO.	DATE	REVISION	APPROV.

Texas Department of Transportation
LOOP 1604

CULVERT SECTIONS STRUCTURES 2C AND 2D

BAIN MEDINA BAIN, INC.
ENGINEERS & SURVEYORS
San Antonio, Texas

Designed	DIST	FED REG	FEDERAL AID PROJECT		HIGHWAY
Checked	15	6			LP1604
Drawn	COUNTY		CONTROL	SECT	JOB	SHEET
Checked	BEXAR		2452	01	035	205

2C-2D.DWG PLOTTING SCALE: 1000=500
DATE: 04-28-97

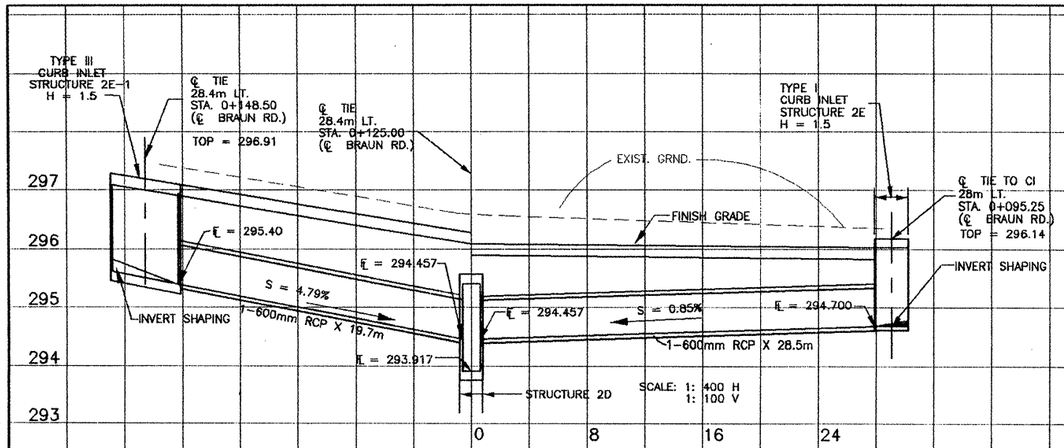

STRUCTURE 2E-1
(1)-600mm RC PIPE(CL III) x 19.7m WITH
(1)-TYPE III CURB INLET UPSTREAM

STRUCTURE 2E
(1)-600mm RC PIPE(CL III) x 28.5m WITH
(1)-TYPE I CURB INLET UPSTREAM

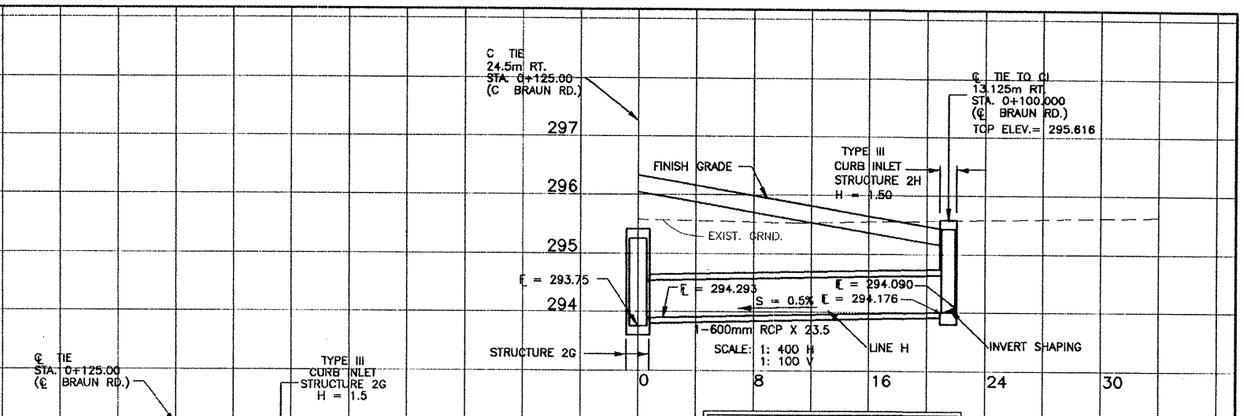

STRUCTURE 2H
(1)-600mm RC PIPE(CL III) x 23.5m
W/(1) TYP. III CURB INLET

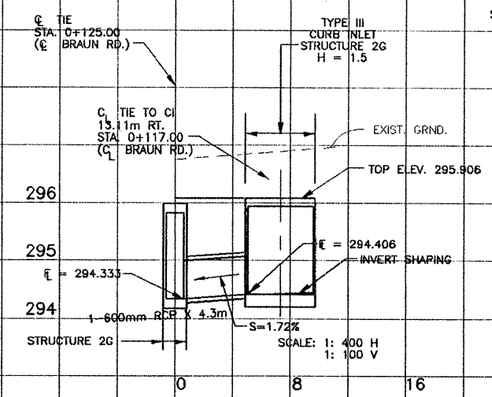

STRUCTURE 2G
(1)-600mm RC PIPE(CL III) x 4.3m
W/(1) TYP. III CURB INLET

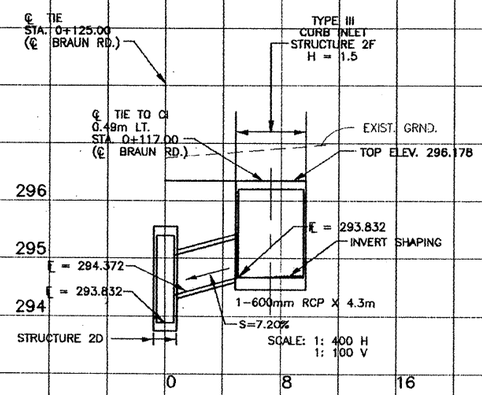

STRUCTURE 2F
(1)-600mm RC PIPE(CL III) x 4.3m WITH
(1)-TYPE III CURB INLET UPSTREAM

ESTIMATED QUANTITIES – SHEET TOTAL

ITEM	UNIT	STRUCTURE NO. 2E	2E1	2F	2G	2H	QTY
RC PIPE (CLIII)(600mm)	M	28.5	19.7	4.3	4.3	23.5	80.3
INLET (COMPL) (CURB) (TYI)	EA	1					1
INLET (COMPL) (CURB) (TYIII)	EA		1	1	1	1	4
* RING AND COVER(150mm)	EA	1	1	1	1	1	5
* SEWER EXCAVATION	M3	55	30	10	10	56	161

* SUPPLIED FOR CONTRACTORS INFORMATION ONLY.

STATE OF TEXAS
CARL BAIN
56996
REGISTERED
PROFESSIONAL ENGINEER

The seal appearing on this document was authorized by Carl Bain P.E. 56996, on MAY 2 1997

NO.	DATE	REVISION	APPROV.

Texas Department of Transportation

LOOP 1604
CULVERT SECTIONS
STRUCTURES 2E THRU 2H

BAIN MEDINA BAIN, INC.
ENGINEERS & SURVEYORS
San Antonio, Texas

Designed	DIST	FED REC	FEDERAL AID PROJECT •	HIGHWAY
Checked	15	6		LP1604

Drawn	COUNTY	CONTROL	SECT	JOB	SHEET
Checked	BEXAR	2452	01	035	206

2E-2H.DWG PLOTTING SCALE: 1000=1000
DATE: 04-09-97

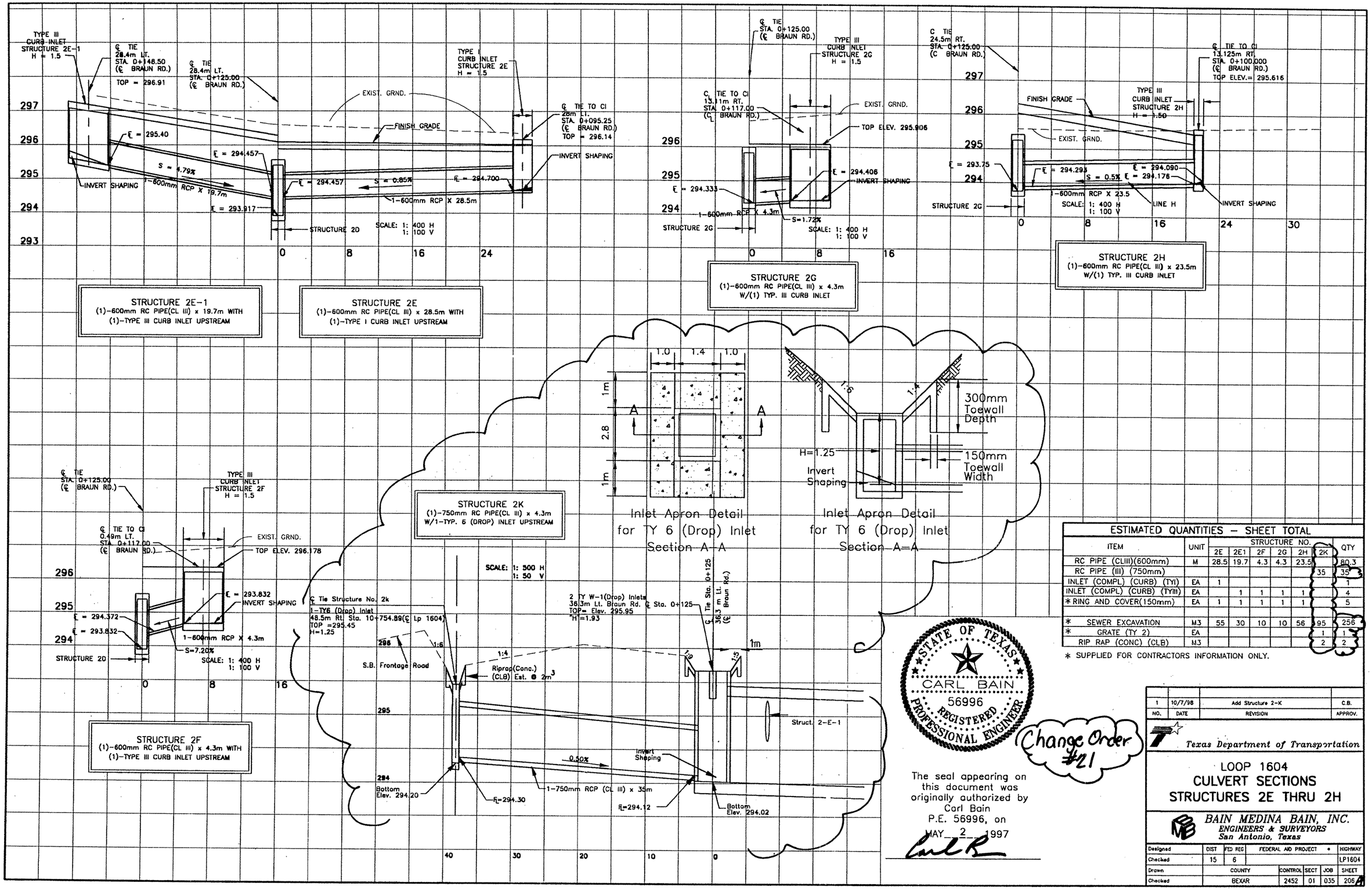

ESTIMATED QUANTITIES – SHEET TOTAL

ITEM	UNIT	STRUCTURE NO. 2E	2E1	2F	2G	2H	2K	QTY
RC PIPE (CLIII)(600mm)	M	28.5	19.7	4.3	4.3	23.5		80.3
RC PIPE (III) (750mm)							35	35
INLET (COMPL) (CURB) (TYI)	EA	1						1
INLET (COMPL) (CURB) (TYIII)	EA		1	1	1	1		4
* RING AND COVER(150mm)	EA	1	1	1	1	1		5
* SEWER EXCAVATION	M3	55	30	10	10	56	95	256
* GRATE (TY 2)	EA						1	1
RIP RAP (CONC) (CLB)	M3						2	2

* SUPPLIED FOR CONTRACTORS INFORMATION ONLY.

STATE OF TEXAS
CARL BAIN
56996
REGISTERED PROFESSIONAL ENGINEER

Change Order #21

The seal appearing on this document was originally authorized by Carl Bain P.E. 56996, on MAY 2 1997

NO.	DATE	REVISION	APPROV.
1	10/7/98	Add Structure 2-K	C.B.

Texas Department of Transportation

LOOP 1604
CULVERT SECTIONS
STRUCTURES 2E THRU 2H

BAIN MEDINA BAIN, INC.
ENGINEERS & SURVEYORS
San Antonio, Texas

Designed	DIST	FED REG	FEDERAL AID PROJECT			HIGHWAY
Checked	15	6				LP1604
Drawn	COUNTY		CONTROL	SECT	JOB	SHEET
Checked	BEXAR		2452	01	035	206A

SITE DESCRIPTION

PROJECT LIMITS: Loop 1604 – From 1.9km South of SH 16 to 101km North of F.M. 471

PROJECT DESCRIPTION: Construction of the widening of a non–freeway facility. Consisting of Grading, Structures, Base, Surface, and Signing.

MAJOR SOIL DISTURBING ACTIVITIES: Grading, Excavation and Embankment for Roadway construction and bridge headers, Cross Drainage structures, extensions, and topsoil for Final Planting and Seeding.

TOTAL PROJECT AREA: 60 Hectares

TOTAL AREA TO BE DISTURBED: 33 Hectares

WEIGHTED RUNOFF COEFFICIENT (AFTER CONSTRUCTION): 0.50

EXISTING CONDITION OF SOIL & VEGETATIVE COVER AND % OF EXISTING VEGETATIVE COVER: The existing soil consist of Lewisville Silty Clay, Patrick Soils, and Tarrant Association Soils throughout the project limits. There is 90% vegetative cover.

NAME OF RECEIVING WATERS: All drainage areas drain to Helotes Creek, which drains into the Culebra Creek which drains into Leon Creek(Seg ID 1906) and ultimately drains into the San Antonio River (Seg ID 1911).

EROSION AND SEDIMENT CONTROLS

SOIL STABILIZATION PRACTICES:

____ TEMPORARY SEEDING
_X_ PERMANENT PLANTING, SODDING, OR SEEDING
_X_ MULCHING
_X_ SOIL RETENTION BLANKET
____ BUFFER ZONES
_X_ PRESERVATION OF NATURAL RESOURCES

OTHER: Disturbed areas on which construction activity has ceased (temporarily or permanently) shall be stabilized within 14 days unless activities are scheduled to resume and do within 21 days.

STRUCTURAL PRACTICES:

_X_ TEMPORARY SEDIMENT CONTROL FENCE (5012)
____ HAY BALES
_X_ ROCK BERMS (5002)
____ DIVERSION, INTERCEPTOR, OR PERIMETER DIKES
____ DIVERSION, INTERCEPTOR, OR PERIMETER SWALES
____ DIVERSION DIKE AND SWALE COMBINATIONS
____ PIPE SLOPE DRAINS
____ PAVED FLUMES
_X_ ROCK BEDDING AT CONSTRUCTION EXIT (5006)
_X_ TIMBER MATTING AT CONSTRUCTION EXIT (5006)
_X_ CHANNEL LINERS (0169)
_X_ SEDIMENT TRAPS
____ SEDIMENT BASINS
_X_ STORM INLET SEDIMENT TRAP
____ STONE OUTLET STRUCTURES
_X_ CURBS AND GUTTERS (0529)
_X_ STORM SEWERS (462 & 464)
____ VELOCITY CONTROL DEVICES

OTHER:

NARRATIVE – SEQUENCE OF CONSTRUCTION (STORM WATER MANAGEMENT) ACTIVITIES:

The Order of activities will be as follows:

1. Proceed with roadway construction a per special provision "Detours, Barricades, Warning Signs, Signs, Sequence of Work, Etc.
2. The Contractor will be required to permanently stabilize construction areas as required in the plans (i.e. Broadcast Seeding, Rip Rap, Pavement, Etc.) at the earliest possible time to minimize erosion.
3. As soil becomes disturbed due to these construction activities, temporary erosion control measures as per the plans shall be constructed. This includes, but not limited to Settling silt fences in ditches, establishing stabilized construction entrances and identifying soil disposal areas.
4. When construction activity is complete and site stabilized and approved by the Engineer, all temporary structural controls shall be removed. Any areas disturbed by the removal of these controls shall be remulched

STORM WATER MANAGEMENT: Storm water drainage will be provided by grass flat bottom ditches and drop inlets and a storm sewer system. This system will carry drainage within the Right of Way to lows in the highway where cross drainage open channels currently exist.

OTHER EROSION AND SEDIMENT CONTROLS:

MAINTENANCE: All erosion and sediment controls will be maintained in good working order. If a repair is necessary, it will be done at the earliest date possible, but no later than 7 calendar days after the surrounding exposed ground has dried sufficiently to prevent further damage from heavy equipment. The areas adjacent to creeks and drainage ways shall have priority followed by devices protecting storm sewer inlets.

INSPECTION: An inspection will be performed by a TxDOT inspector every week as well as after every half inch or more of rain (as recorded on a non–freezing rain gauge to be located at the Project Site). An inspection and Maintenance Report will be made per each Inspection. Based on the inspection results, the controls shall be revised per the inspection report.

WASTE MATERIALS: All waste materials will be collected and stored in a securely lidded metal dumpster. The dumpster will meet all state and local city solid waste management regulations. All trash and construction debris form the site will be deposited in the dumpster. The dumpster will be emptied as necessary or as required by local regulations and the trash will be hauled to a local dump. No construction waste material will be buried on site. No waste disposal wells, land disposal of class 1 wastes, or use of sewage holding tanks as part of organized collection systems shall be allowed on the Recharge Zone. Soil disposal and storage areas, equipment storage and vehicle maintenance and fueling areas shall be identified.

HAZARDOUS WASTE (INCLUDING SPILL REPORTING): At a minimum, any products in the following categories are considered to be hazardous: paints, acids for cleaning, masonry surfaces cleaning solvents, asphalt products, chemical additives for soil stabilization or concrete curing compounds and additives. In the event of a hazardous material spill, the spill coordinator shall be contacted immediately. The Engineer shall be contacted immediately. The Engineer will then contact the district spill coordinator.

SANITARY WASTE: Waste water collected on–site shall be collected by chemical toilets and shall be transported off the Recharge Zone.

OFFSITE VEHICLE TRACKING:

_X_ HAUL ROADS DAMPENED FOR DUST CONTROL

_X_ EXCESS DIRT ON ROAD REMOVED DAILY
_X_ STABILIZED CONSTRUCTION ENTRANCE

PERMITS:

REMARKS: Disposal areas, stockpiles, and haul roads shall be constructed in a manner that will minimize and control the amount of sediment that may enter receiving waters. Disposal areas shall not be located in any wetland, waterbody or streambed.

Construction staging areas and vehicle maintenance areas shall be constructed by the Contractor. in a manner to minimize the runoff of pollutants.

All waterways shall be cleared as soon as practicable of temporary embankment, temporary bridges, matting, falsework, piling, debris or other obstructions placed during construction operations that are not a part of the finished work.

STATE OF TEXAS
CARL BAIN
56996
REGISTERED
PROFESSIONAL ENGINEER

The seal appearing on this document was authorized by Carl Bain P.E. 56996, on MAY 2, 1997

NO.	DATE	REVISION	APPROV.

Texas Department of Transportation
LOOP 1604

TxDOT STORM WATER POLLUTION PREVENTION PLAN (SW3P)

BAIN MEDINA BAIN, INC.
ENGINEERS & SURVEYORS
San Antonio, Texas

Designed	DIST	FED REG	FEDERAL AID PROJECT •				HIGHWAY
Checked	15	6					LP1604
Drawn	COUNTY		CONTROL	SECT	JOB		SHEET
Checked	BEXAR		2452	01	035		207

SW3P.DWG PLOTTING SCALE: 1000=500
DATE: 04–28–97

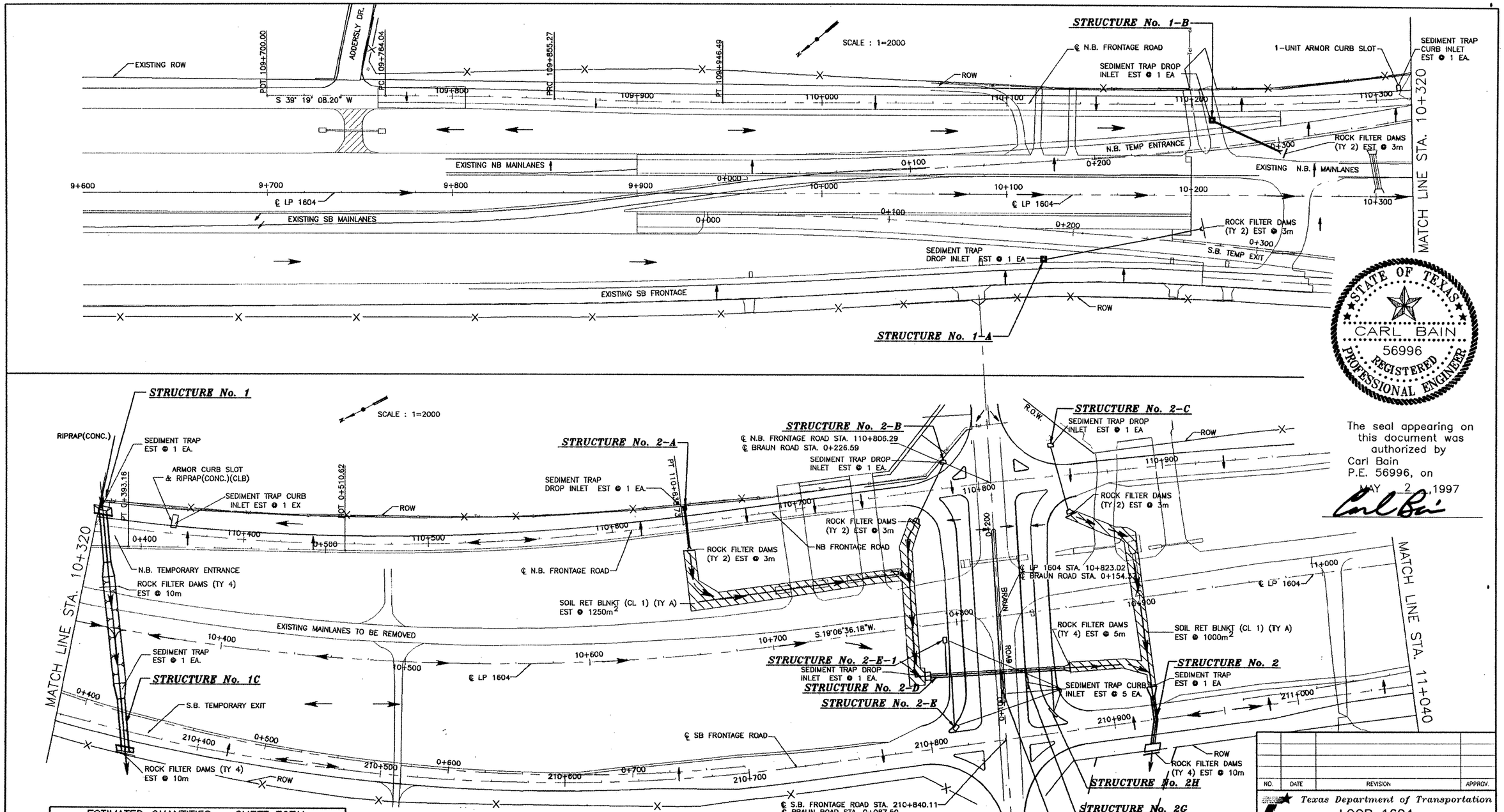

STATE OF TEXAS
CARL BAIN
56996
REGISTERED PROFESSIONAL ENGINEER

The seal appearing on this document was authorized by Carl Bain P.E. 56996, on MAY 2, 1997

ESTIMATED QUANTITIES – SHEET TOTAL		
EST.	UNIT	DESCRIPTION
2250	M2	SOIL RET BLNKT (CL 1) (TY A)
15	M	ROCK FILTER DAMS (TY 2)
15	M	ROCK FILTER DAMS (REMOVE & REPLACE) (TY 2)
15	M	ROCK FILTER DAMS (REMOVE) (TY 2)
35	M	ROCK FILTER DAMS (TY 4)
35	M	ROCK FILTER DAMS (REMOVE & REPLACE) (TY 4)
35	M	ROCK FILTER DAMS (REMOVE) (TY 4)
6	EA	*SEDIMENT TRAP DROP INLET
3	EA	*SEDIMENT TRAP
7	EA	*SEDIMENT TRAP CURB INLET

*FOR CONTRACTORS INFORMATION ONLY

NO.	DATE	REVISION	APPROV.

Texas Department of Transportation
LOOP 1604

SW3P LAYOUT
STA. 9+760 TO STA. 11+040

BAIN MEDINA BAIN, INC.
ENGINEERS & SURVEYORS
San Antonio, Texas

Designed	DIST	FED REG	FEDERAL AID PROJECT			HIGHWAY
Checked	15	6				LP1604
Drawn	COUNTY		CONTROL	SECT	JOB	SHEET
Checked	BEXAR		2452	01	035	208

1 OF 4

SW3P-S1.DWG PLOTTING SCALE: 1000=2000
DATE: 04-11-97

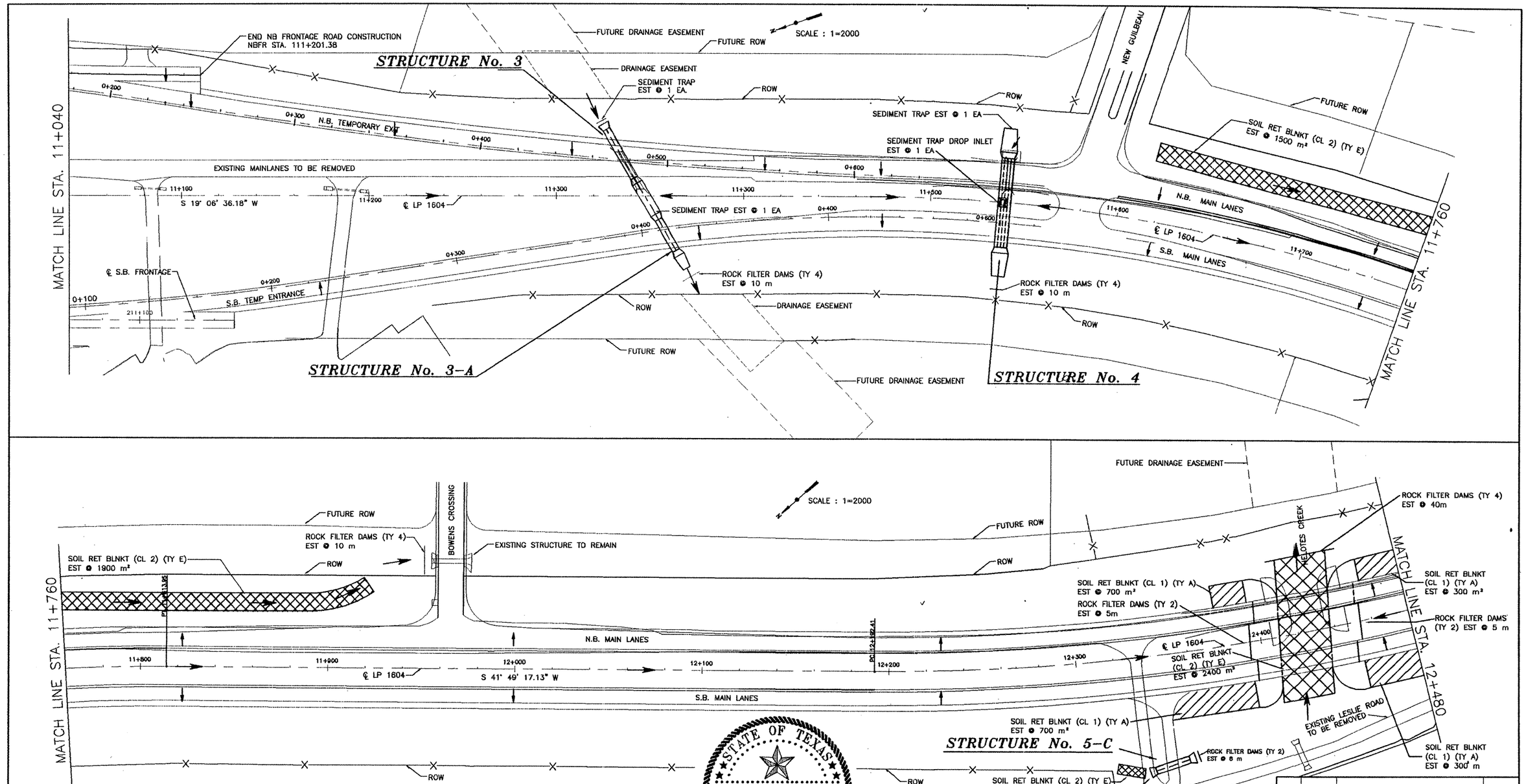

ESTIMATED QUANTITIES – SHEET TOTAL		
EST.	UNIT	DESCRIPTION
2000	M2	SOIL RET BLNKT (CL 1) (TY A)
5800	M2	SOIL RET BLNKT (CL 2) (TY E)
19	M	ROCK FILTER DAMS (TY 2)
19	M	ROCK FILTER DAMS (REMOVE & REPLACE) (TY 2)
19	M	ROCK FILTER DAMS (REMOVE) (TY 2)
70	M	ROCK FILTER DAMS (TY 4)
70	M	ROCK FILTER DAMS (REMOVE & REPLACE) (TY 4)
70	M	ROCK FILTER DAMS (REMOVE) (TY 4)
1	EA	*SEDIMENT TRAP DROP INLET
5	EA	*SEDIMENT TRAP

*FOR CONTRACTORS INFORMATION ONLY

STATE OF TEXAS
CARL BAIN
56996
REGISTERED
PROFESSIONAL ENGINEER

The seal appearing on this document was authorized by Carl Bain P.E. 56996, on MAY 2, 1997

NO.	DATE	REVISION	APPROV.

Texas Department of Transportation
LOOP 1604

SW3P LAYOUT
STA. 11+040 TO STA. 12+480

BAIN MEDINA BAIN, INC.
ENGINEERS & SURVEYORS
San Antonio, Texas

Designed	DIST	FED REC	FEDERAL AID PROJECT •	HIGHWAY
Checked	15	6		LP1604

Drawn	COUNTY	CONTROL	SECT	JOB	SHEET
Checked	BEXAR	2452	01	035	209

2 OF 4

SW3P-S2.DWG PLOTTING SCALE: 1:000=2000
DATE: 04-11-97

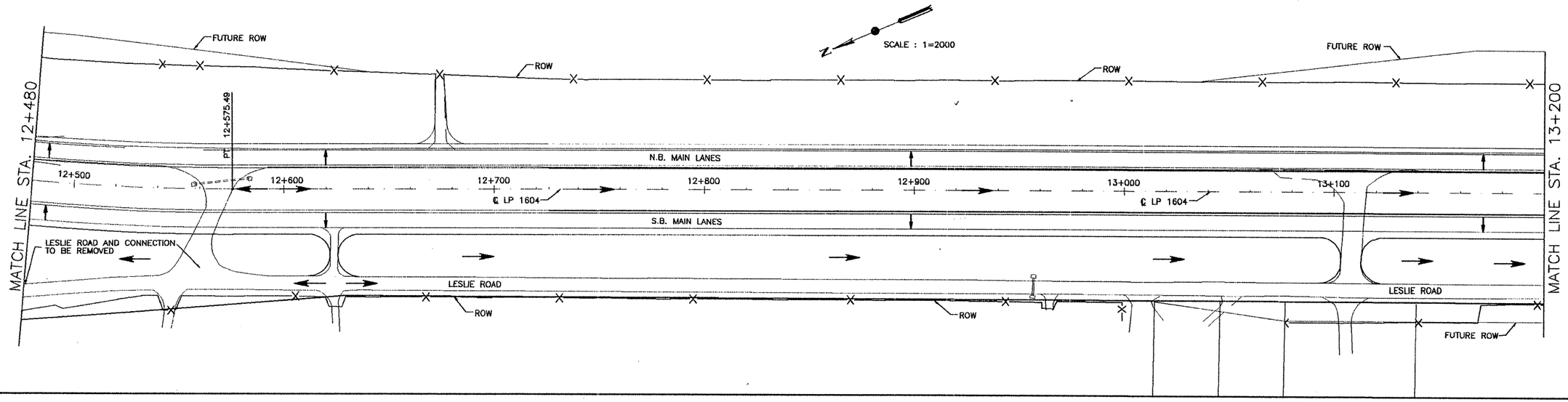

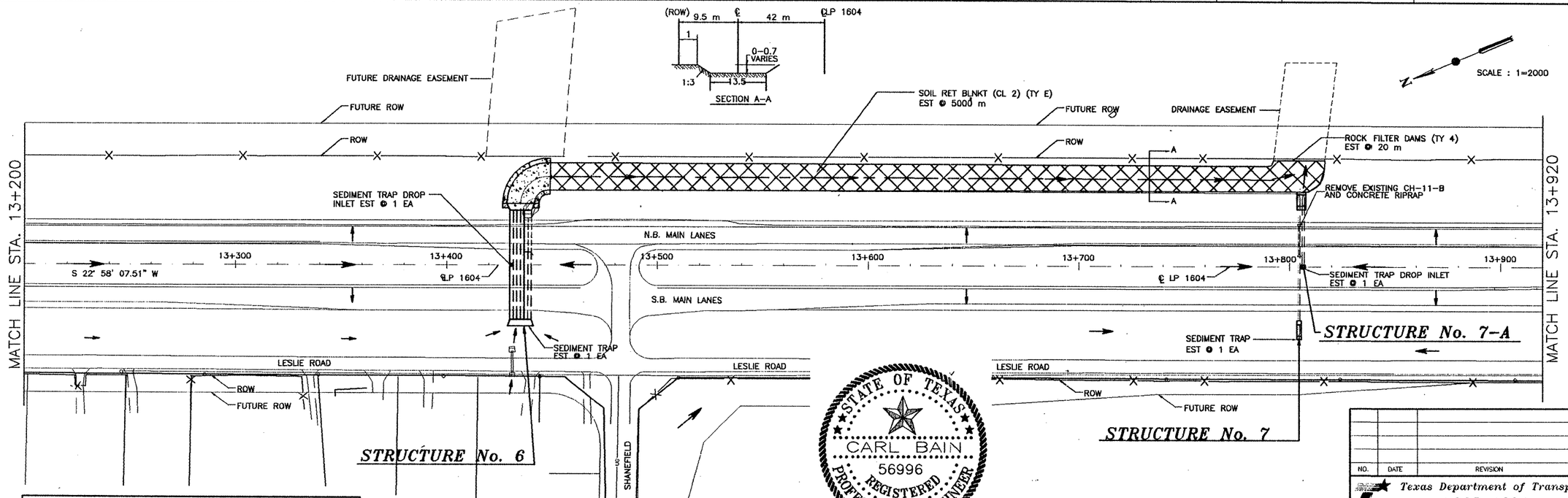

ESTIMATED QUANTITIES – SHEET TOTAL		
EST.	UNIT	DESCRIPTION
5000	M2	SOIL RET BLNKT (CL 2) (TY E)
20	M	ROCK FILTER DAMS (TY 4)
20	M	ROCK FILTER DAMS (REMOVE & REPLACE) (TY 4)
20	M	ROCK FILTER DAMS (REMOVE) (TY 4)
2	EA	*SEDIMENT TRAP DROP INLET
2	EA	*SEDIMENT TRAP

*FOR CONTRACTORS INFORMATION ONLY

STATE OF TEXAS
CARL BAIN
56996
REGISTERED PROFESSIONAL ENGINEER

The seal appearing on this document was authorized by Carl Bain P.E. 56996, on MAY 2, 1997

NO.	DATE	REVISION	APPROV.

Texas Department of Transportation
LOOP 1604

SW3P LAYOUT
STA. 12+480 TO STA. 13+920

BAIN MEDINA BAIN, INC.
ENGINEERS & SURVEYORS
San Antonio, Texas

Designed	DIST	FED REG	FEDERAL AID PROJECT •			HIGHWAY
Checked	15	6				LP1604
Drawn	COUNTY		CONTROL	SECT	JOB	SHEET
Checked	BEXAR		2452	01	035	210

3 OF 4

SW3P-S3.DWG PLOTTING SCALE: 1000=2000
DATE: 03-11-97

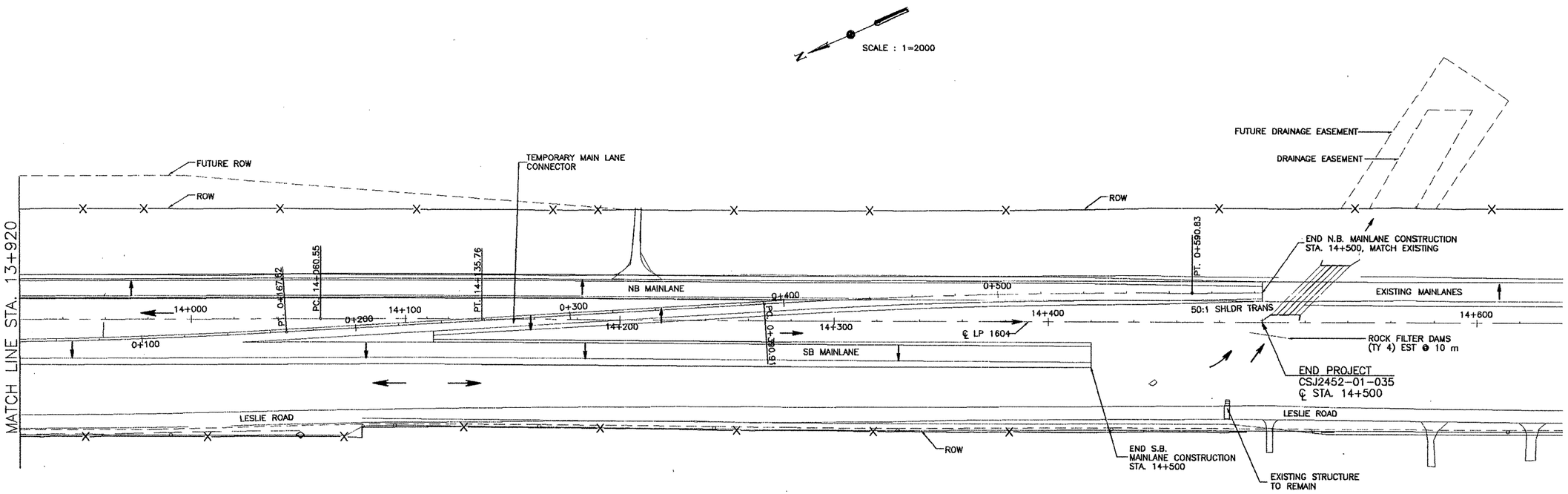

ESTIMATED QUANTITIES – SHEET TOTAL		
EST.	UNIT	DESCRIPTION
10	M	ROCK FILTER DAMS (TY 4)
10	M	ROCK FILTER DAMS (REMOVE & REPLACE) (TY 4)
10	M	ROCK FILTER DAMS (REMOVE) (TY 4)

*FOR CONTRACTORS INFORMATION ONLY

STATE OF TEXAS
CARL BAIN
56996
REGISTERED PROFESSIONAL ENGINEER

The seal appearing on this document was authorized by Carl Bain P.E. 56996, on MAY 2, 1997

Carl Bain

4 OF 4

NO.	DATE	REVISION	APPROV.

Texas Department of Transportation
LOOP 1604

SW3P LAYOUT
STA. 13+920 TO STA. 14+500

BAIN MEDINA BAIN, INC.
ENGINEERS & SURVEYORS
San Antonio, Texas

Designed	DIST	FED REG	FEDERAL AID PROJECT •				HIGHWAY
Checked	15	6					LP1604
Drawn	COUNTY			CONTROL	SECT	JOB	SHEET
Checked	BEXAR			2452	01	035	211

SW3P-S4.DWG PLOTTING SCALE: 1000=2000
DATE: 04-11-97

ESTIMATED QUANTITIES – SHEET TOTAL		
ITEM	UNIT	QUANTITY
EXCAVATION(CHANNEL)	M3	8105

NOTE: QUANTITIES ARE SUMMARIZED ON LARGE STRUCTURE SUMMARY SHEET 41.

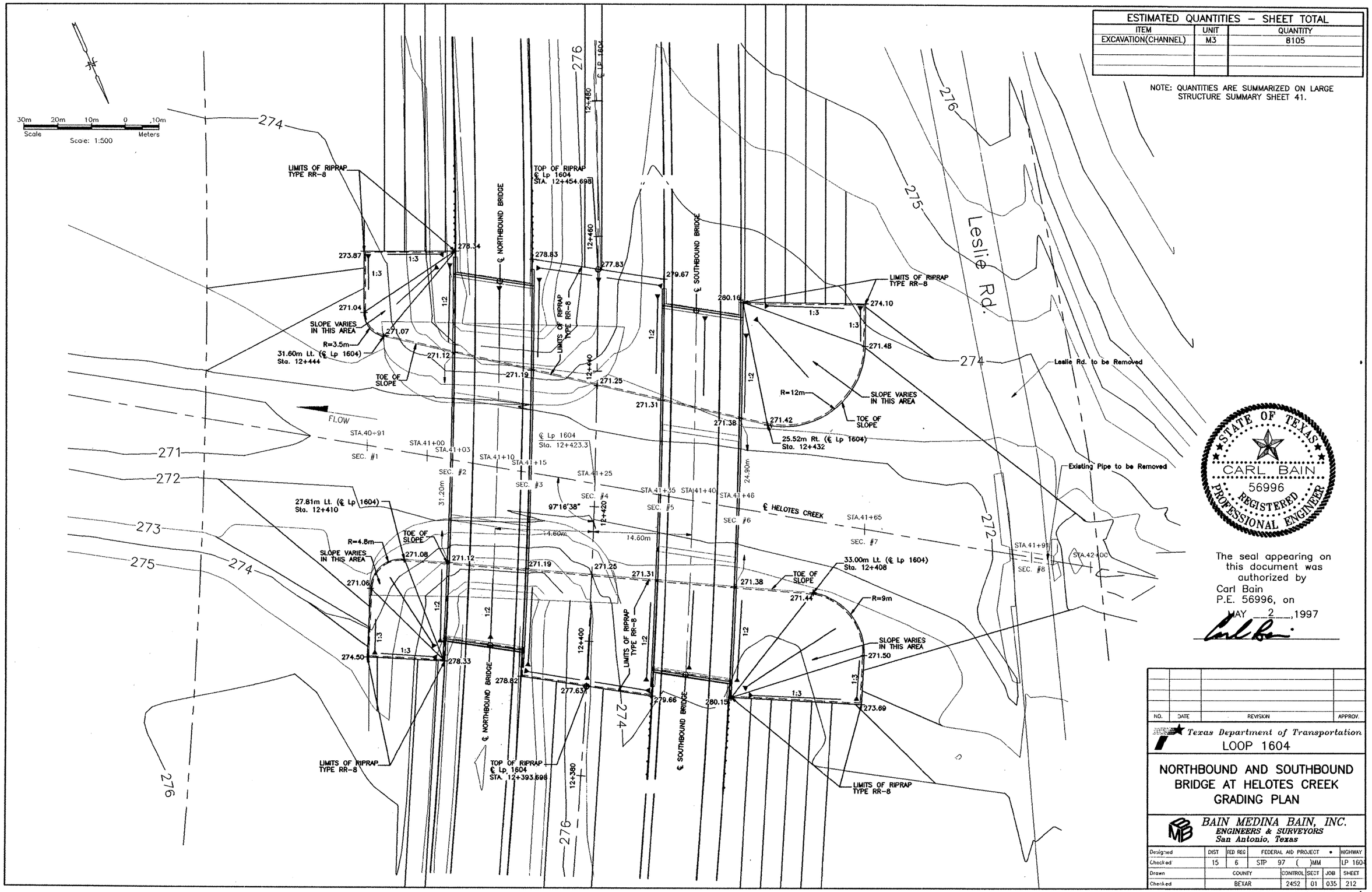

STATE OF TEXAS
CARL BAIN
56996
REGISTERED PROFESSIONAL ENGINEER

The seal appearing on this document was authorized by Carl Bain P.E. 56996, on MAY 2, 1997

NO.	DATE	REVISION	APPROV.

Texas Department of Transportation
LOOP 1604

NORTHBOUND AND SOUTHBOUND BRIDGE AT HELOTES CREEK GRADING PLAN

BAIN MEDINA BAIN, INC.
ENGINEERS & SURVEYORS
San Antonio, Texas

Designed	DIST	FED REG	FEDERAL AID PROJECT			HIGHWAY
Checked	15	6	STP 97 ( )MM			LP 1604
Drawn	COUNTY		CONTROL	SECT	JOB	SHEET
Checked	BEXAR		2452	01	035	212

HELOTES.DWG PLOTTING SCALE: 1000=5'00
DATE: 04-11-97

HEC-RAS Plan: Plan 02 Reach: Helotes Crk 4/11/97 2:00:44 PM

River Sta	Q Total	Min Ch El	W.S. Elev	Crit W.S.	E.G. Elev	E.G. Slope	Vel	Chnl Flow Area	Top Width	Froude # Chl
	(m3/s)	(m)	(m)	(m)	(m)	(m/m)	(m/s)	(m2)	(m)	
4343	765.00	272.50	278.41		278.46	0.001026	1.05	887.22	332.43	0.17
4343	883.00	272.50	278.81		278.85	0.000911	1.05	1022.30	353.22	0.16
4191	765.00	272.50	278.37		278.40	0.000215	0.88	1099.21	409.40	0.13
4191	883.00	272.50	278.77		278.80	0.000200	0.90	1293.61	585.34	0.13
4176	765.00	271.90	278.37		278.40	0.000188	0.85	1181.50	473.92	0.13
4176	883.00	271.90	278.77		278.80	0.000175	0.86	1389.22	561.07	0.12
4150	765.00	271.50	277.73	275.71	278.33	0.002636	3.42	223.40	48.32	0.51
4150	883.00	271.50	278.01	276.07	278.72	0.002973	3.72	237.11	49.44	0.54
4125	Bridge									
4100	765.00	271.10	276.45		277.04	0.002830	3.39	225.49	52.82	0.52
4100	883.00	271.10	276.66		277.37	0.003289	3.73	236.48	53.65	0.57
4054	765.00	270.70	276.55		276.68	0.003753	1.66	503.86	232.79	0.31
4054	883.00	270.70	276.80		276.94	0.003606	1.72	563.76	235.51	0.31
4023	765.00	270.70	276.45		276.56	0.002966	1.66	559.03	264.08	0.28
4023	883.00	270.70	276.71		276.83	0.002872	1.72	629.33	273.11	0.28
3993	765.00	270.70	276.42		276.51	0.002122	1.47	647.77	278.45	0.24
3993	883.00	270.70	276.68		276.77	0.002087	1.53	722.08	287.16	0.24
3871	765.00	270.70	276.01	274.83	276.18	0.004561	1.99	447.33	188.22	0.35
3871	883.00	270.70	276.28	274.97	276.46	0.004403	2.05	498.40	190.27	0.35

Plan: Plan 02 Reach: Helotes Crk Riv Sta: 4125
Profile: 2 Opening: Bridge #1 4/11/97 2:00 PM
100 Yr. Frequency

E.G. US.	(m)	278.72	Element	Inside BR	US Inside BR DS
W.S. US.	(m)	278.01	E.G. Elev (m)	278.69	277.40
Q Total	(m3/s)	883.00	W.S. Elev (m)	277.87	276.62
Q Bridge	(m3/s)	883.00	Crit W.S. (m)	276.22	275.15
Q Weir	(m3/s)		Max Chl Dpth (m)	6.37	5.52
Weir Sta	Lft (m)		Vel Total (m/s)	4.01	3.91
Weir Sta	Rgt (m)		Flow Area (m2)	220.41	225.78
Weir	Submerg		Froude # Chl	0.59	0.60
Weir Max	Depth (m)		Specif Force m3)	976.10	918.79
Min Top Rd	(m)	280.20	Hydr Depth (m)	4.65	4.35
Min El Prs	(m)	277.10	W.P. Total (m)	75.83	76.63
Delta EG	(m)	1.35	Conv. Total (m3/s)	11223.2	11600.8
Delta WS	(m)	1.35	Top Width (m)	47.35	51.95

Plan: Plan 02 Reach: Helotes Crk Riv Sta: 4125
Profile: 1 Opening: Bridge #1 4/11/97 2:00 PM
50 Yr. Frequency

E.G. US.	(m)	278.33	Element	Inside BR	US Inside BR DS
W.S. US.	(m)	277.73	E.G. Elev (m)	278.30	277.07
Q Total	(m3/s)	765.00	W.S. Elev (m)	277.61	276.43
Q Bridge	(m3/s)	765.00	Crit W.S. (m)	275.84	274.81
Q Weir	(m3/s)		Max Chl Dpth (m)	6.11	5.33
Weir Sta	Lft (m)		Vel Total (m/s)	3.67	3.54
Weir Sta	Rgt (m)		Flow Area (m2)	208.55	215.95
Weir	Submerg		Froude # Chl	0.55	0.55
Weir Max	Depth (m)		Specif Force m3)	847.29	800.97
Min Top Rd	(m)	280.20	Hydr Depth (m)	4.50	4.22
Min El Prs	(m)	277.10	W.P. Total (m)	73.68	75.02
Delta EG	(m)	1.29	Conv. Total (m3/s)	10432.4	10925.5
Delta WS	(m)	1.28	Top Width (m)	46.34	51.19

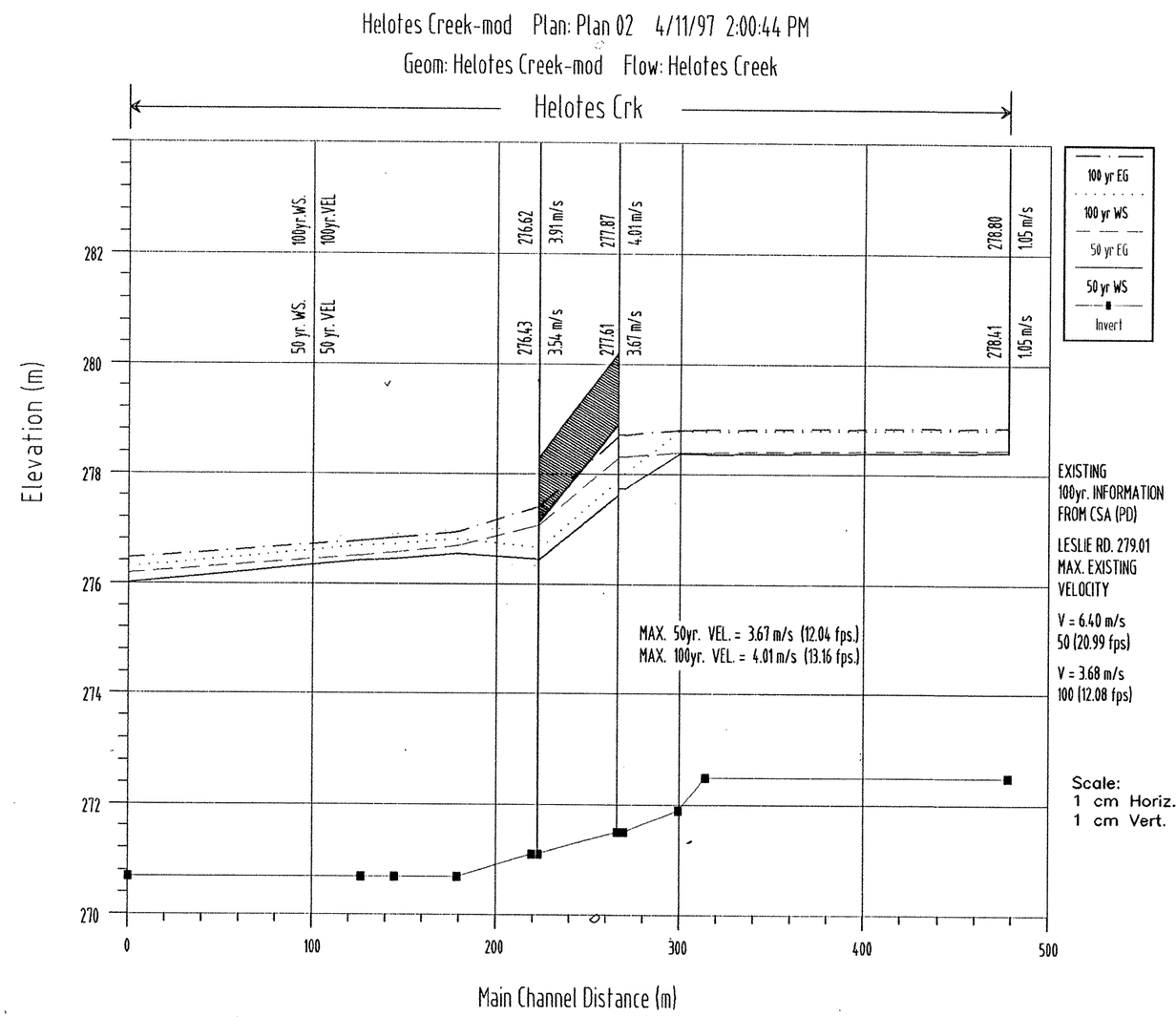

STATE OF TEXAS
CARL BAIN
56996
REGISTERED
PROFESSIONAL ENGINEER

The seal appearing on this document was authorized by Carl Bain P.E. 56996, on MAY 2, 1997

NOTE: HEC-RAS USED FOR HYDRAULIC ANALYSIS AND DESIGN

NO.	DATE	REVISION	APPROV

Texas Department of Transportation

LOOP 1604

HYDRAULIC STUDY FOR PROPOSED BRIDGE REPLACEMENT AT HELOTES CREEK

BAIN MEDINA BAIN, INC.
ENGINEERS & SURVEYORS
San Antonio, Texas

Designed	DIST	FED REG	FEDERAL AID PROJECT			HIGHWAY
Checked	15	6				LP1604
Drawn	COUNTY		CONTROL	SECT	JOB	SHEET
Checked	BEXAR		2452	01	035	213

1A-1B.DWG PLOTTING SCALE: 1000=5000
DATE: 04-09-97

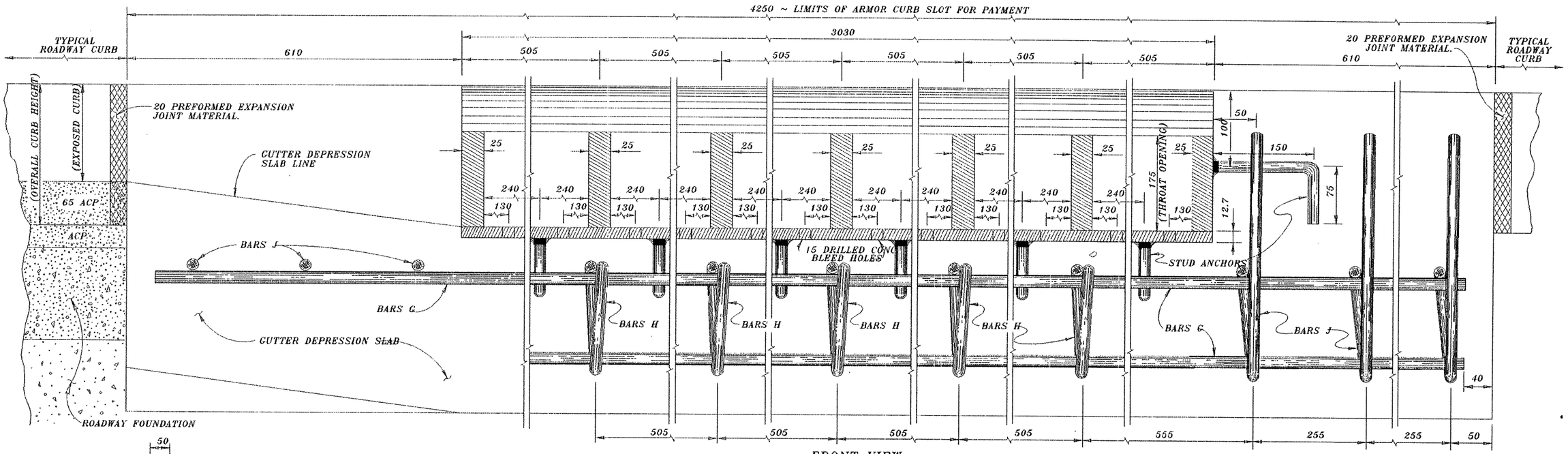

FRONT VIEW

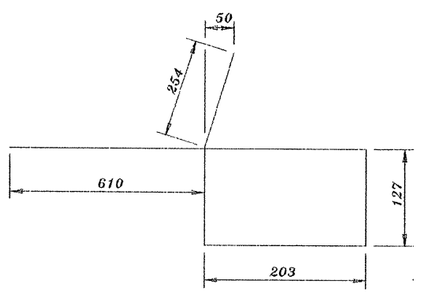

BAR J

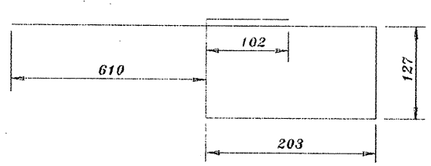

BAR H

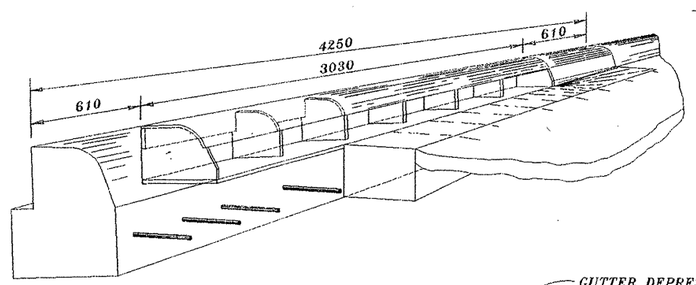

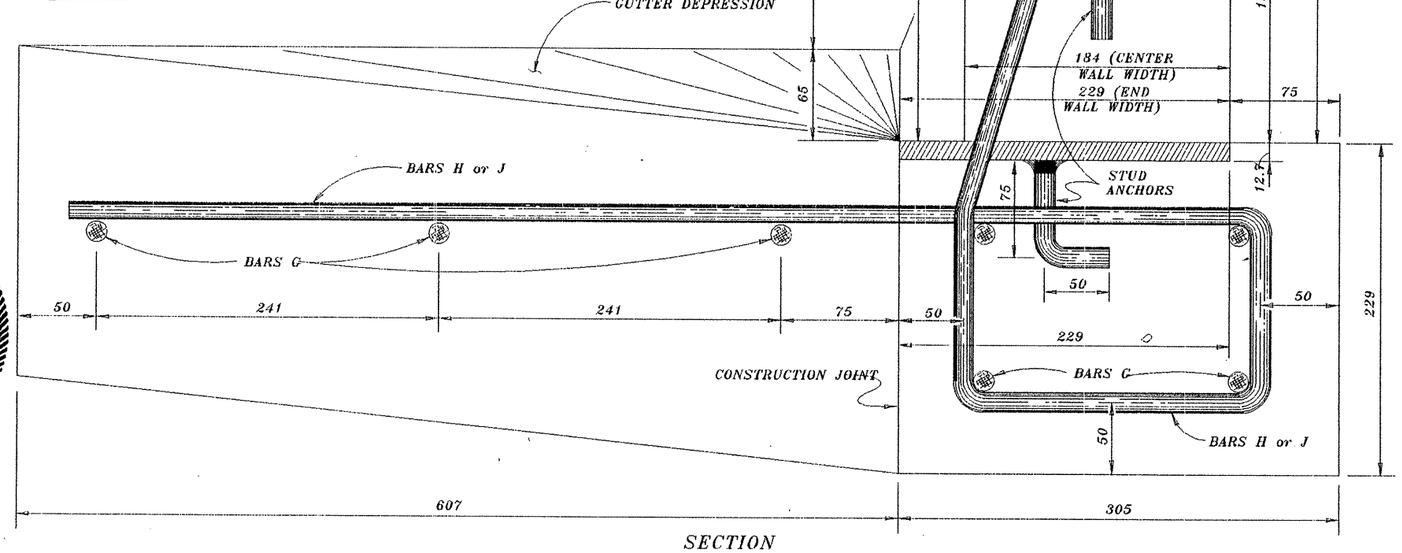

SECTION

ESTIMATED QUANTITIES
FOR REINFORCING STEEL

BAR	NO.	SIZE	SPAC.	LENGTH	WEIGHT
G	7	#4	SHOWN	4170	29
H	5	#4	508	1372	7
J	6	#4	203	1524	9
* TOTAL WEIGHT				kg	45
* CONCRETE FOR FOUNDATION				m3	0.36
CONCRETE FOR CUTTER DEPRESSION				m3	* 0.60

STRUCTURAL STEEL FOR ARMOR CURB SLOT		
STUD ANCHORS (12.7 DIA.)	kg	2
STEEL PLATE	kg	205
* TOTAL WEIGHT	kg	207

* FOR CONTRACTORS' INFO ONLY.

GENERAL NOTES:

ALL CONCRETE SHALL BE CL."A".

ALL DIMENSIONS RELATING TO REINFORCING STEEL ARE TO CENTER OF BARS.

ALL SIDES OF ARMOR CURB SLOT AND STUD ANCHORS SHALL BE 6 mm FILLET WELDS.

ALL EXPOSED STRUCTURAL STEEL (ARMOR) SHALL BE GALVANIZED.

ALL EXPOSED EDGES ON ARMOR CURB SHALL RECEIVE A 3 mm BEVEL.

THE SHAPE OF THE TYPICAL ROADWAY CURB SHALL TRANSITION TO THE ARMOR CURB AS APPROVED BY THE ENGINEER.

ALL DIMENSIONS ARE IN MILLIMETERS UNLESS OTHERWISE SPECIFIED.

ARMOR CURB SLOT(M)
WITH CONCRETE FOUNDATION

STATE OF TEXAS
CARL BAIN
56996
REGISTERED
PROFESSIONAL ENGINEER

The seal appearing on this document was authorized by Carl Bain P.E. 56996, on MAY 2 1997

Carl Bain

STRUCTURE DESIGN
/BRIDGE/STDS/ACS-MET.DWG

06/96

FED.RD. DIV.NO.	PROJECT NO.			SHEET NO.
6				214
STATE	STATE DISTRICT	COUNTY		
TEXAS	SAT	BEXAR		
CONT.	SECT.	JOB	HIGHWAY NO.	
2452	01	035	LP 1604*	

NOTES :

1. ALL CONCRETE SHALL BE CLASS "A". COARSE AGGREGATE GRADE "4" MAY BE USED.
2. DIMENSIONS RELATING TO REINFORCING STEEL ARE TO CENTER OF BARS.
3. REINFORCING STEEL SHALL BE FIELD BENT OR CUT TO ALLOW FOR INSTALLATION OF PIPE(S).
4. PIPES MAY BE PLACED ON ANY SIDE(S) AS INDICATED IN THE PLANS.
5. PAYMENT FOR GRATE, CONC. & STEEL SHALL BE INCLUDED IN THE UNIT COST OF ITEM 465 "MANHOLES & INLETS".
6. THE STATION LOCATION AND OFFSET DISTANCE SHOWN IN THE PLANS IS TO THE CENTER OF THE INLET.
7. RIPRAP BASIN AROUND THE INLET WHEN SHOWN IN THE PLANS IS PAID FOR UNDER ITEM 432.
8. ALL EXPOSED CORNERS SHALL HAVE A 20 CHAMFER.
9. ALL DIMENSIONS ARE IN mm UNLESS SHOWN OTHERWISE.

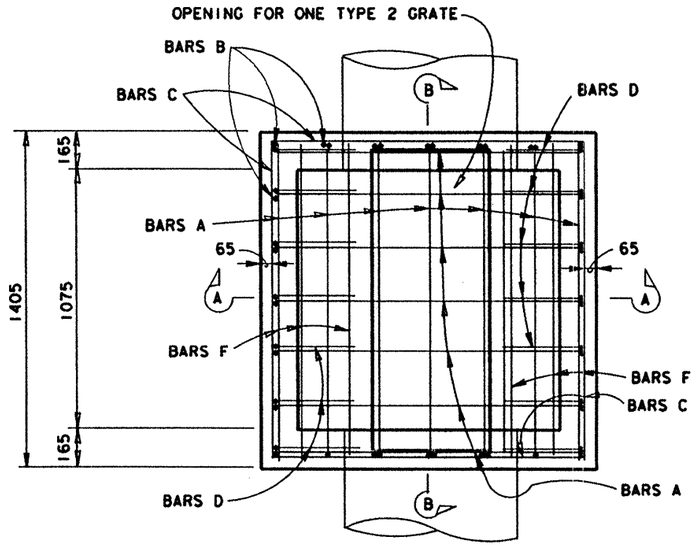

PLAN VIEW

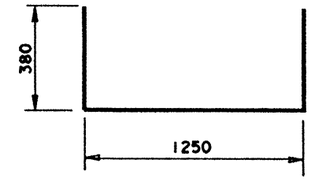

BARS A

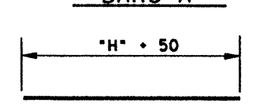

BARS B

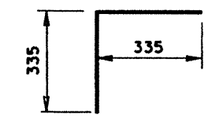

BARS D

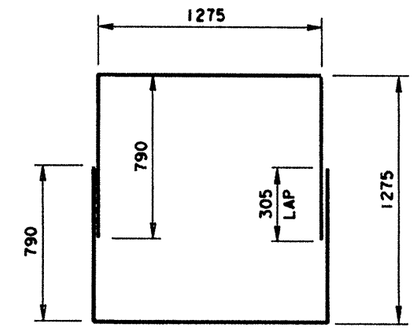

BARS C

2 BARS @ EACH SPACING

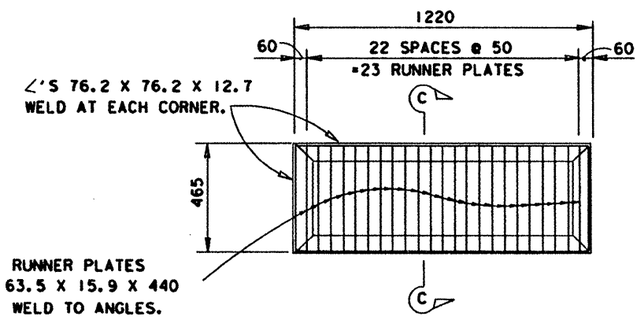

GRATE - TYPE 2

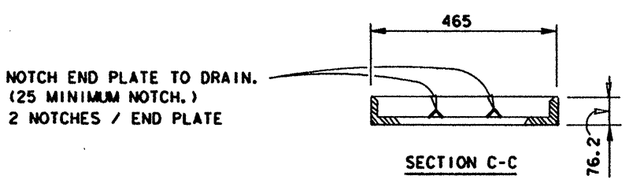

SECTION C-C

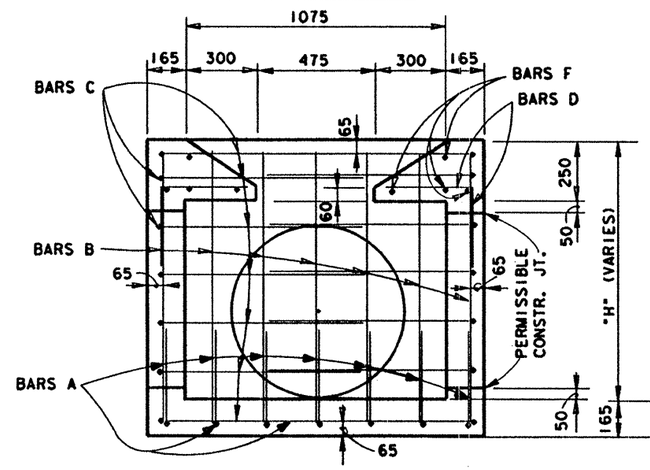

SECTION A-A

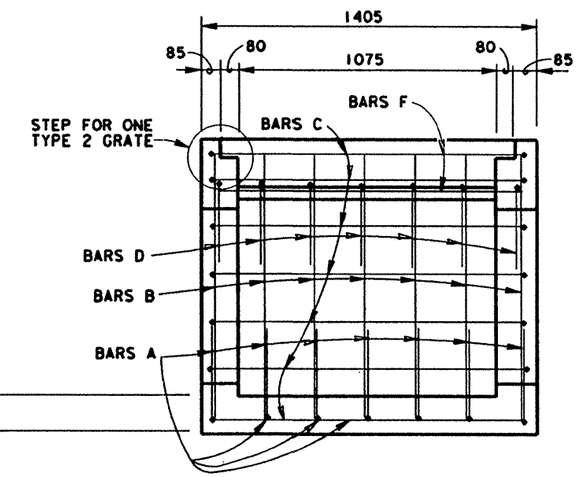

SECTION B-B

ESTIMATED QUANTITIES FOR "H" = 1000					
REINFORCING STEEL					
BAR	NO.	SIZE	SPACING	LENGTH	MASS
A	14	#4	200 ±	2010	28
B	24	#4	200 ±	1050	25
C	12	#4	200 ±	2855	34
D	14	#4	200 ±	670	9
F	8	#5	AS SHOWN	1275	16
TOTAL REINFORCING STEEL (kg) = 112 *					
CL A CONCRETE (M^3) = 1.3 *					
GRATE TYPE 2 (EA.) = 1 *					

QUANTITIES VARY WITH "H"

* FOR CONTRACTOR'S INFORMATION ONLY.

SPACING AND LENGTH IS TO NEAREST mm.
MASS IS TO THE NEAREST kg.

DROP INLET TYPE 3(M)

GRATE TYPE 2(M)

SAN ANTONIO DISTRICT STANDARD

FED. RD. DIV. NO.	PROJECT NO.			SHEET NO.
6	CD 2452 01 035			215
STATE	STATE DISTRICT	COUNTY		
TEXAS	SAT	BEXAR		
CONT.	SECT.	JOB	HIGHWAY NO.	
2452	01	035	LP 1604	

12/95

STRUCTURE DESIGN
/BRIDGE/STDS/DROPIN3.DGN

NOTES :

1. ALL CONCRETE SHALL BE CLASS "A". COARSE AGGREGATE GRADE "4" MAY BE USED.
2. DIMENSIONS RELATING TO REINFORCING STEEL ARE TO CENTER OF BARS.
3. PAYMENT FOR CONC., STEEL & GRATE SHALL BE INCLUDED IN THE UNIT COST OF ITEM 465 "MANHOLES & INLETS".
4. THE STATION LOCATION AND OFFSET DISTANCE SHOWN IN THE PLANS IS TO THE CENTER OF THE INLET.
5. RIPRAP BASIN AROUND THE INLET WHEN SHOWN IN THE PLANS IS PAID FOR UNDER ITEM 432.
6. THE WORK FOR THE BLOCKOUT IN THE BOX CULVERT DECK FOR A PROPOSED CULVERT OR THE BREAKOUT OF THE DECK ON AN EXIST. BOX IS SUBSIDIARY TO THE INLET.
7. ALL EXPOSED CORNERS SHALL HAVE A 20 CHAMFER.
8. ALL DIMENSIONS ARE IN mm UNLESS SHOWN OTHERWISE

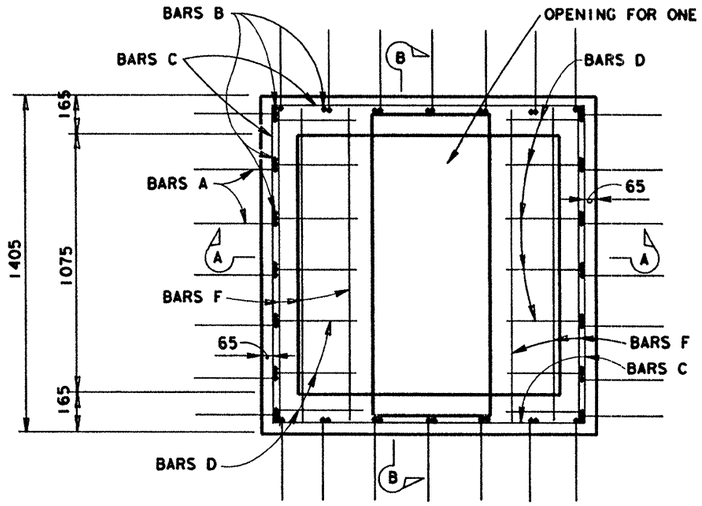

PLAN VIEW

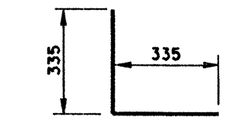

BARS A

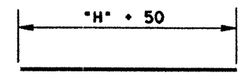

BARS B

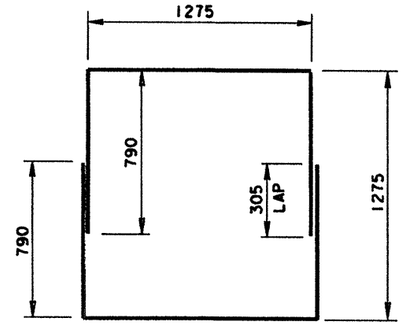

BARS C

2 BARS @ EACH SPACING

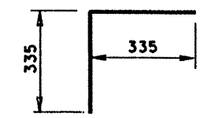

BARS D

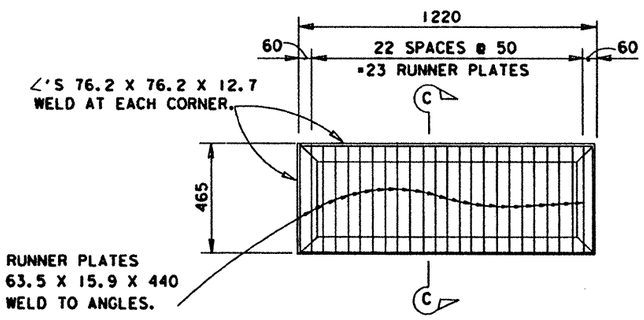

GRATE - TYPE 2

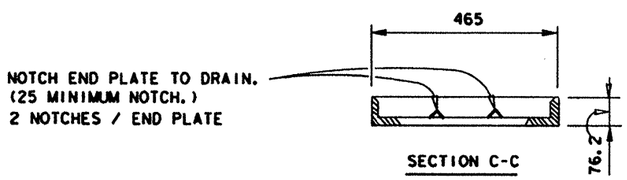

SECTION C-C

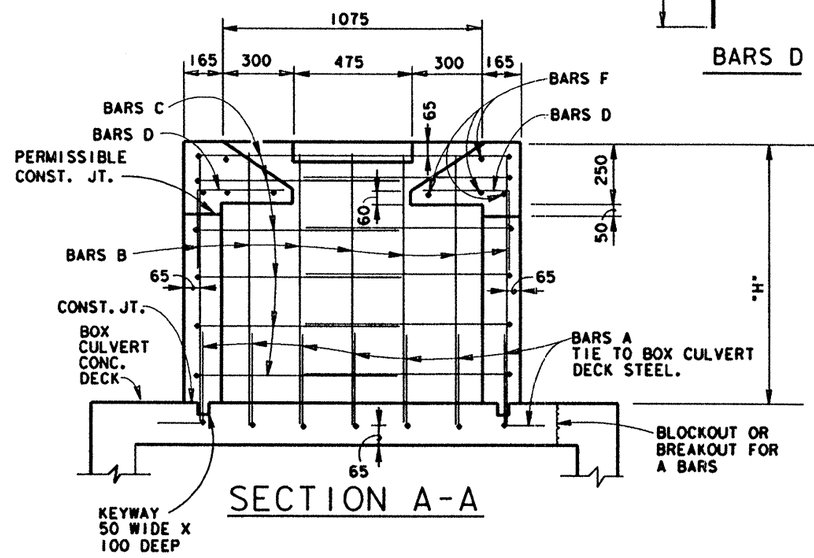

SECTION A-A

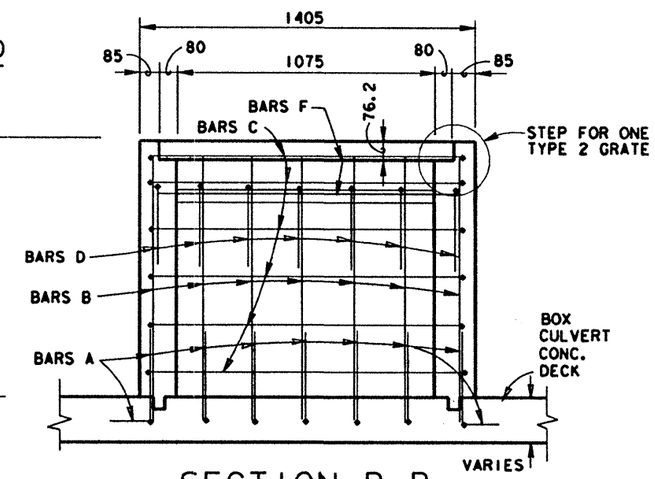

SECTION B-B

QUANTITIES VARY WITH "H"

ESTIMATED QUANTITIES FOR "H" = 1000					
REINFORCING STEEL					
BAR	NO.	SIZE	SPACING	LENGTH	MASS
A	28	#4	200±	670	19
B	24	#4	200±	1050	25
C	10	#4	200±	2855	28
D	14	#4	200±	670	9
F	8	#5	AS SHOWN	1275	16
TOTAL REINFORCING STEEL (kg)					97 *
CL A CONCRETE (M^3) = 0.9 *					
GRATE TYPE 2 (EA.) = 1 *					

* FOR CONTRACTOR'S INFORMATION ONLY

SPACING AND LENGTH IS TO THE NEAREST mm.
MASS IS TO THE NEAREST kg.

DROP INLET TYPE 3A(M)
GRATE TYPE 2(M)
SAN ANTONIO DISTRICT STANDARD

FED. RD. DIV. NO.	PROJECT NO.			SHEET NO.
6	CD 2452 01 035			216
STATE	STATE DISTRICT	COUNTY		
TEXAS	SAT	BEXAR		
CONT.	SECT.	JOB	HIGHWAY NO.	
2452	01	035	LP 1604	

12/95

STRUCTURE DESIGN
/BRIDGE/STDS/DROPIN3A.DGN

NOTES :

1. ALL CONCRETE SHALL BE CLASS "A". COURSE AGGREGATE GRADE "4" MAY BE USED.
2. DIMENSIONS RELATING TO REINFORCING STEEL ARE TO CENTER OF BARS.
3. REINFORCING STEEL SHALL BE FIELD BENT OR CUT TO ALLOW FOR INSTALLATION OF PIPE(S).
4. PIPES MAY BE PLACED ON ANY SIDE(S) AS INDICATED IN THE PLANS.
5. PAYMENT FOR GRATES, CONC. & STEEL SHALL BE INCLUDED IN THE UNIT COST OF ITEM 465 "MANHOLES & INLETS".
6. THE STATION LOCATION AND OFFSET DISTANCE SHOWN IN THE PLANS IS TO THE CENTER OF THE INLET.
7. RIPRAP BASIN AROUND THE INLET WHEN SHOWN IN THE PLANS IS PAID FOR UNDER ITEM 432.
8. ALL EXPOSED CORNERS SHALL HAVE A 20 CHAMFER.
9. ALL DIMENSIONS ARE IN mm UNLESS SHOWN OTHERWISE.

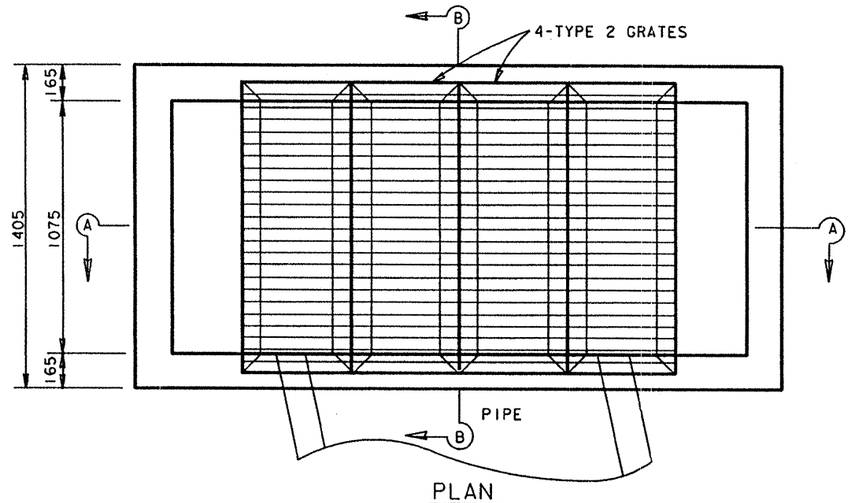

PLAN

REINFORCING STEEL				
BAR	NO.	SIZE	SPACING	LENGTH
R	13	# 4	230 ±	2525
S	5	# 4	230 ±	3890
T	36	# 4	230 ±	VARIES
U	VARIES	# 4	230 ±	2525
V	VARIES	# 4	230 ±	2100

TOTAL CONCRETE AND STEEL WILL VARY WITH "H"

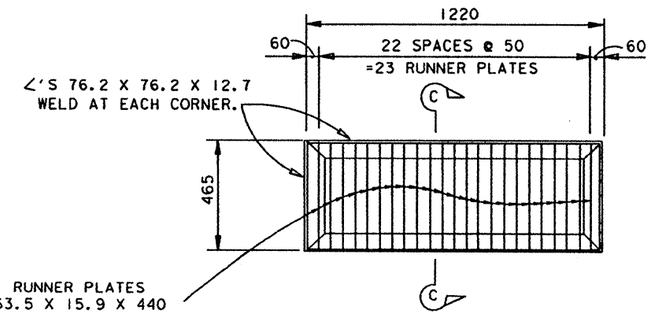

GRATE ~ TYPE 2

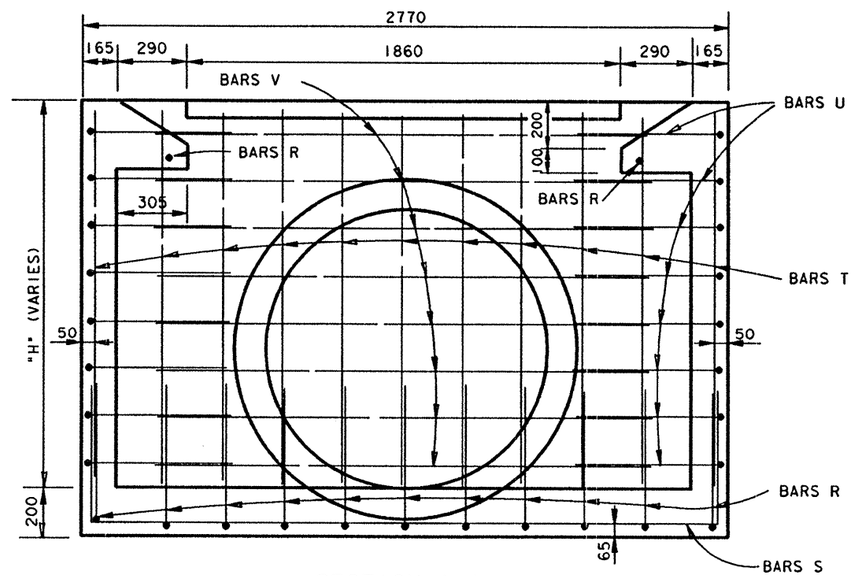

SECTION A-A

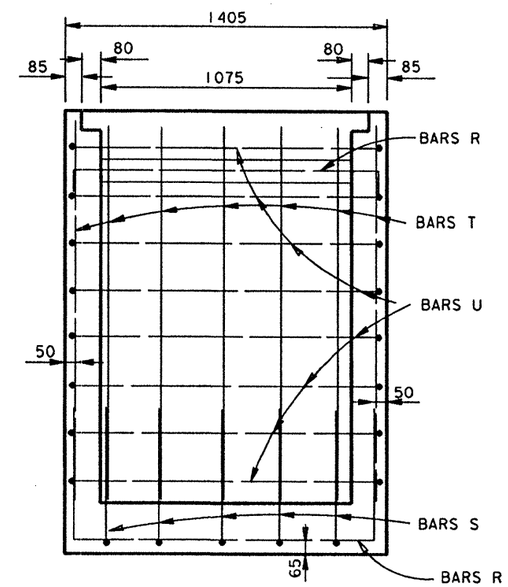

SECTION B-B

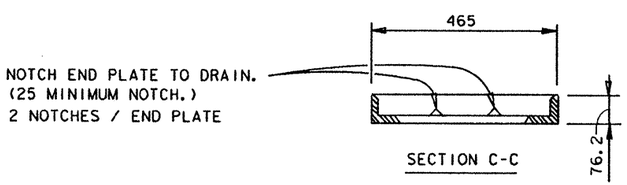

SECTION C-C

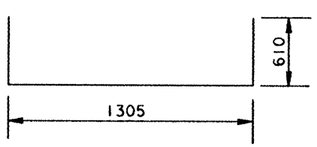

BARS U

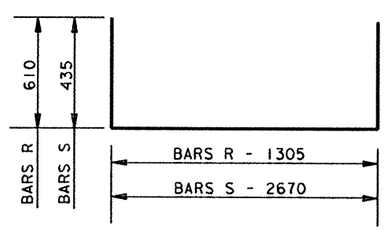

BARS R & S

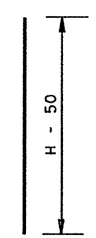

BARS T

SAN ANTONIO DISTRICT STANDARD

DROP INLET TYPE 6 (M) & GRATE TYPE 2 (M)

FED. RD. DIV. NO.	PROJECT NO.			SHEET NO.
6	CD 2452 01 035			217
STATE	STATE DISTRICT	COUNTY		
TEXAS	SAT	BEXAR		
CONT.	SECT.	JOB	HIGHWAY NO.	
2452	01	035	I.P. 1604	

11/95

STRUCTURE DESIGN
/BRIDGE/STDS/DROPINTY6.DGN

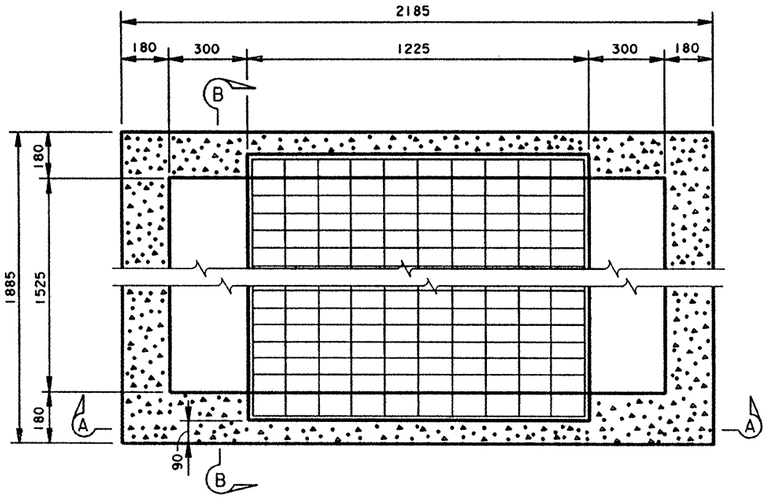

PLAN VIEW W/GRATE

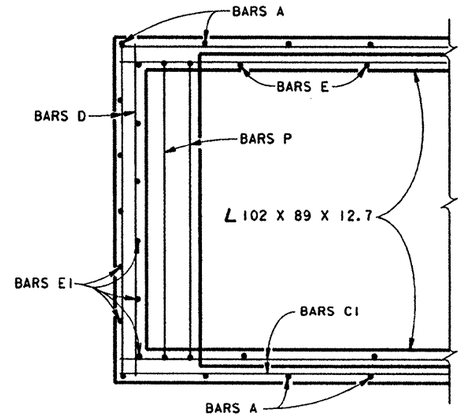

NOTE: SHOWING WALL REINF. STEEL ONLY. FLOOR REINF. STEEL NOT SHOWN FOR CLARITY. SEE SECTION A-A & B-B FOR FLOOR REINF. STEEL.

PARTIAL PLAN VIEW

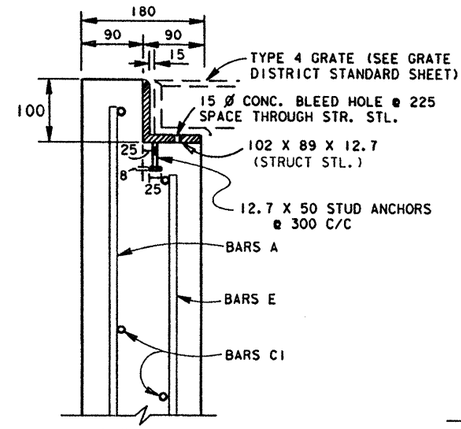

SIDE WALL DETAIL @ GRATE

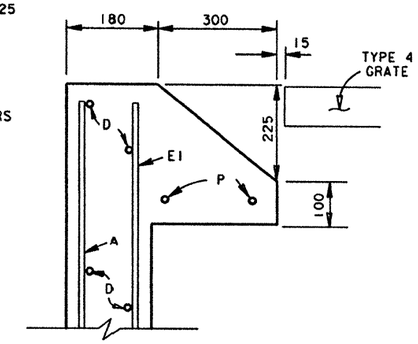

END WALL DETAIL

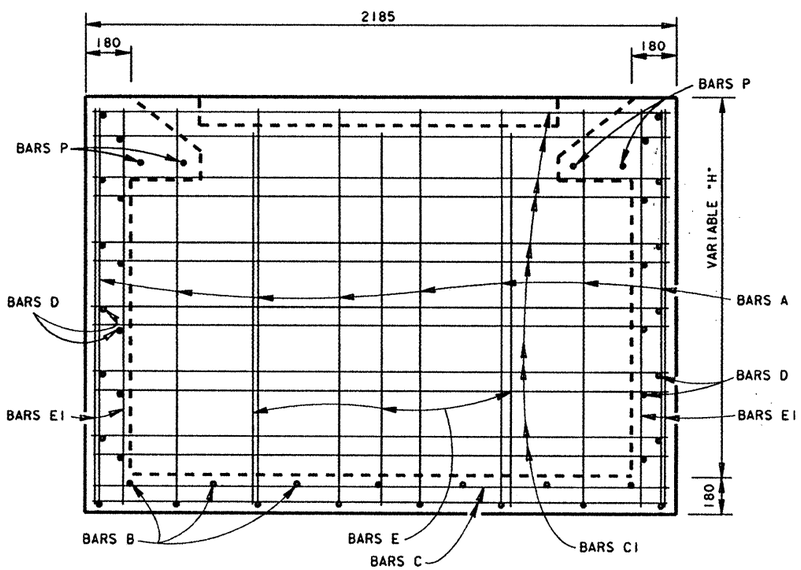

SECTION A-A
(SIDE ELEVATION)

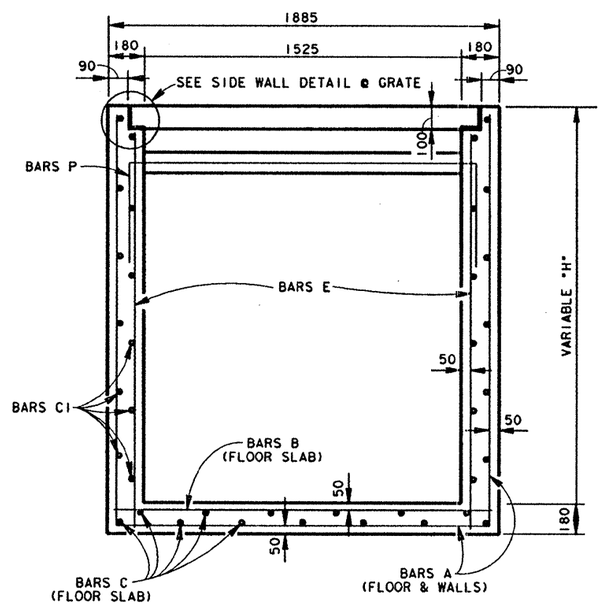

SECTION B-B

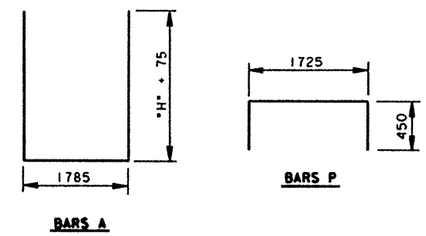

GENERAL NOTES :

1. ALL CONCRETE SHALL BE CLASS "A". COARSE AGGREGATE GRADE "4" MAY BE USED.
2. DIMENSIONS RELATING TO REINFORCING STEEL ARE TO CENTER OF BARS.
3. REINFORCING STEEL SHALL BE FIELD BENT OR CUT TO ALLOW FOR INSTALLATION OF PIPE(S).
4. PIPES MAY BE PLACED ON ANY SIDE AS INDICATED IN THE PLANS.
5. PAYMENT FOR GRATE, CONC., REIN. & STRUCTURAL STEEL SHALL BE INCLUDED IN THE UNIT COST OF ITEM 465 "MANHOLES & INLETS".
6. THE STATION LOCATION AND OFFSET DISTANCE SHOWN IN THE PLANS IS TO THE CENTER OF THE INLET.
7. RIPRAP BASIN AROUND THE INLET WHEN SHOWN IN THE PLANS IS PAID FOR UNDER ITEM 432.
8. ALL EXPOSED CORNERS SHALL HAVE A 20 CHAMFER.
9. ALL DIMENSIONS ARE IN mm UNLESS SHOWN OTHERWISE.

DROP INLET TYPE W-1 (M)
SAN ANTONIO DISTRICT STANDARD

ESTIMATED QUANTITIES (BASED ON "H"= 2000)			
REINF. STL. kg	CL. A CONC. m3	STRUCT. STL. kg	GRATES TYPE 4
* 247	* 3.58	* 44	* 1

*FOR CONTRACTOR'S INFORMATION ONLY

REINFORCING STEEL (BASED ON "H"= 2000)

BARS A					BARS B					BARS C					BARS C1					BARS D					BARS E					BARS E1					BARS P				
NO.	SIZE	SPAC.	LEN.	MASS	NO.	SIZE	SPAC.	LEN.	MASS	NO.	SIZE	SPAC.	LEN.	MASS	NO.	SIZE	SPAC.	LEN.	MASS	NO.	SIZE	SPAC.	LEN.	MASS	NO.	SIZE	SPAC.	LEN.	MASS	NO.	SIZE	SPAC.	LEN.	MASS	NO.	SIZE	SPAC.	LEN.	MASS
8	#4	300	5935	47	7	#4	300	1785	12	13	#4	300	2085	27	24	#4	300	2085	50	24	#4	300	1785	43	6	#4	460	1955	12	22	#4	300	2060	45	4	#4	SHOWN	2640	11

NOTE : QUANTITIES WILL VARY WITH "H".

FED. RD. DIV. NO.	PROJECT NO.			SHEET NO.
6	CD 2452 01 035			218
STATE	STATE DISTRICT	COUNTY		
TEXAS	SAT	BEXAR		
CONT.	SECT.	JOB	HIGHWAY NO.	
2452	01	035	I.P. 1604	

12/95

STRUCTURE DESIGN
/BRIDGE/STDS/DROPINWI.DGN

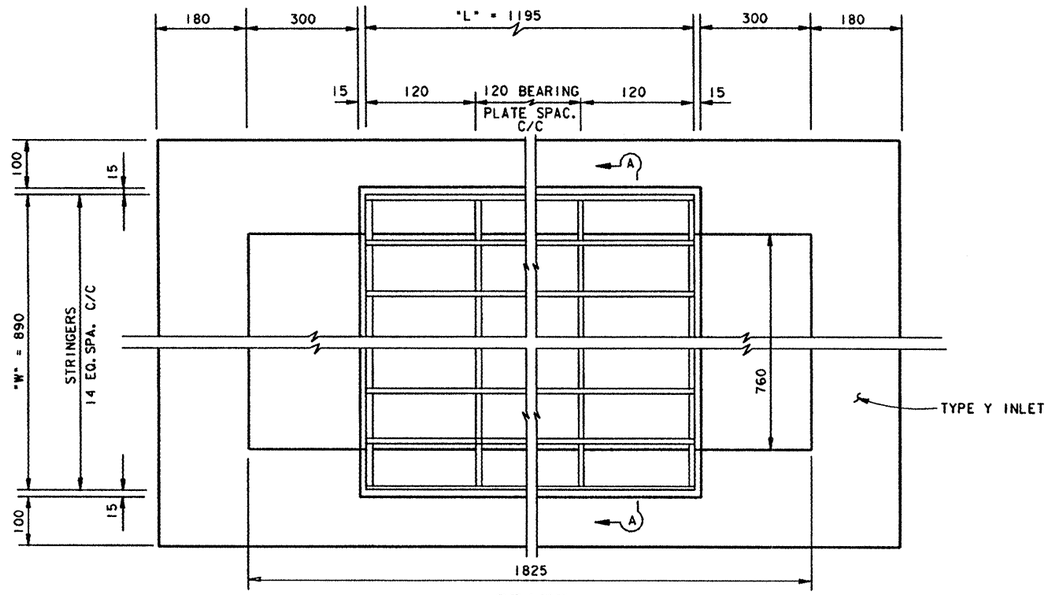

GRATE
PLAN VIEW

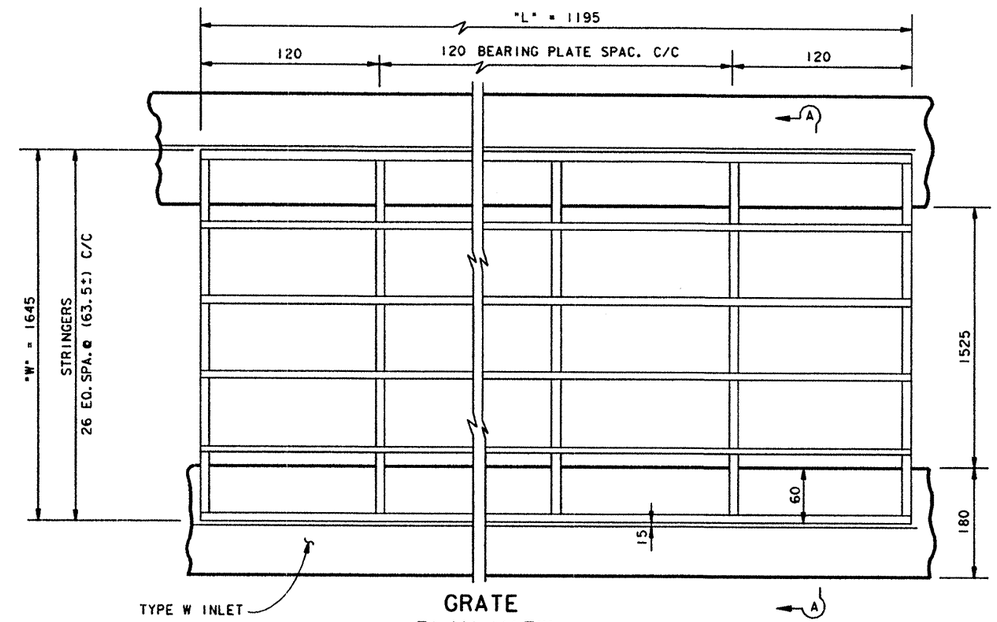

GRATE
PLAN VIEW

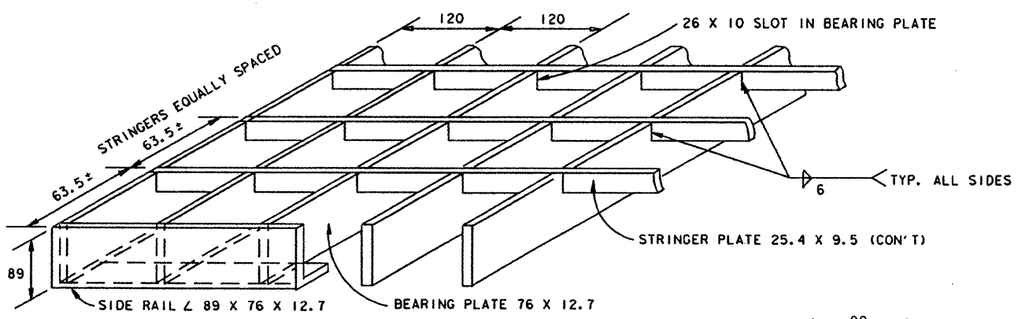

GRATE CORE

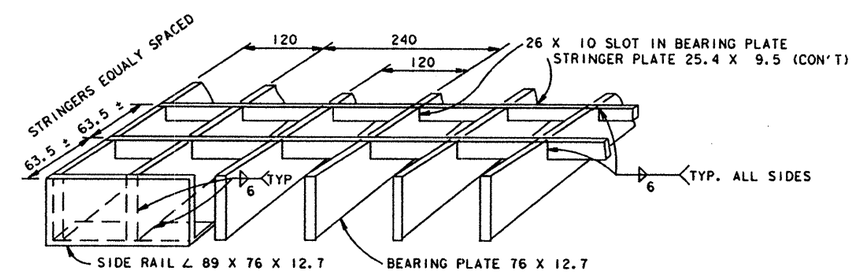

GRATE CORE

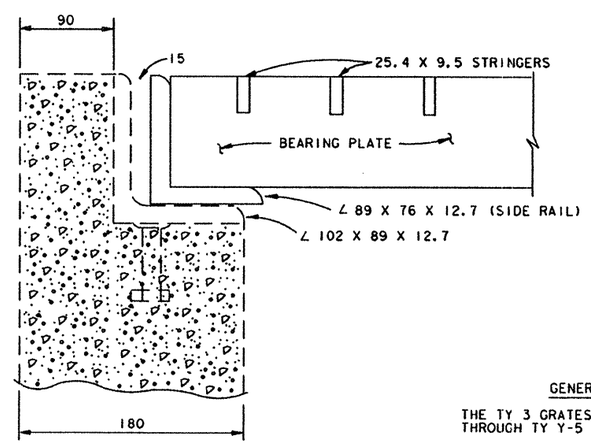

SECTION A-A

STRUCTURAL STEEL FOR ONE TYPE 3 GRATE											
GRATE DIM. OUT TO OUT		SIDE-RAIL 89 X 76 X 12.7			BEARING PLATE ℞ 76 X 12.7			STRINGER PLATE ℞ 25.4 X 9.5			TOTAL MASS
L	W	NO.	LGTH.	MASS	NO.	LGTH.	MASS	NO.	LGTH.	MASS	kg
1195	890	2	1195	37	11	860	72	13	1195	30	130 *

* FOR CONTRACTOR'S INFORMATION ONLY
LENGTHS ARE TO THE NEAREST mm AND MASS IS TO THE NEAREST kg.

GRATE TYPE 3

STRUCTURAL STEEL FOR ONE TYPE 4 GRATE											
GRATE DIM. OUT TO OUT		SIDE-RAIL 89 X 76 X 12.7			BEARING PLATE ℞ 76 X 12.7			STRINGER PLATE ℞ 25.4 X 9.5			TOTAL MASS
L	W	NO.	LGTH.	MASS	NO.	LGTH.	MASS	NO.	LGTH.	MASS	kg
1195	1645	2	1195	37	11	1620	136	27	1195	62	235 *

* FOR CONTRACTOR'S INFORMATION ONLY
LENGTHS ARE TO THE NEAREST mm AND MASS IS TO THE NEAREST kg.

GRATE TYPE 4

TYPE 3 & TYPE 4 GRATE (M)

SAN ANTONIO DISTRICT STANDARD

GENERAL NOTES :

THE TY 3 GRATES ARE REQUIRED ON TY Y-1 THROUGH TY Y-5 INLETS.

THE TY 4 GRATES ARE REQUIRED ON TY W-1 THROUGH TY W-5 INLETS.

THE GRATE(S) ARE SUBSIDARY TO THE INLET.

ALL DIMENSIONS ARE mm UNLESS SHOWN OTHERWISE

FED. RD. DIV. NO.	PROJECT NO.		SHEET NO.
6	CD 2452 01 035		219
STATE	STATE DISTRICT	COUNTY	
TEXAS	SAT	BEXAR	
CONT.	SECT.	JOB	HIGHWAY NO.
2452	01	035	LP 1604

11/95

STRUCTURE DESIGN
/BRIDGE/STDS/GRATE3T04.DGN

REINFORCING STEEL

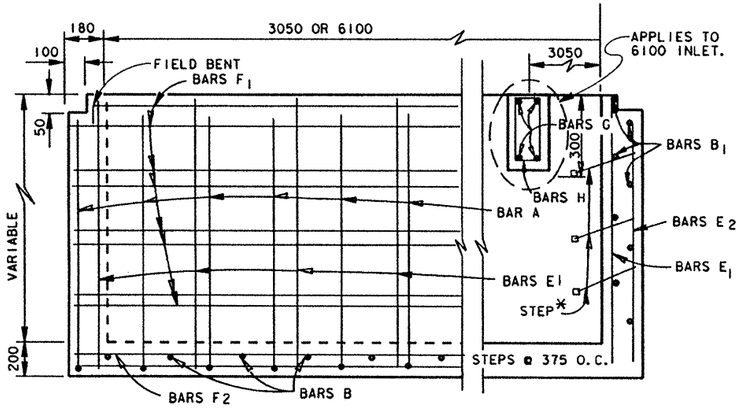

SECTION B-B

*LOCATION OF STEPS WILL BE DETERMINED BY THE LOCATION OF RING & COVER.

LOWER UNIT 3050 X 1125 (TY. I)				
BAR	NO.	SIZE	SPAC.	LENGTH
A	12	#4	300	VARIES
B	11	#4	300	1405
B_1	VARIES	#4	300	1405
E_1	20	#4	450±	VARIES
E_2	6	#4	450±	VARIES
F_1	VARIES	#4	300±	3330
F_2	9	#4	—	3330

LOWER UNIT 3050 X 1525 (TY. II)				
BAR	NO.	SIZE	SPAC.	LENGTH
A	12	#4	300	VARIES
B	11	#4	300	1805
B_1	VARIES	#4	300	1805
E_1	22	#4	450±	VARIES
E_2	8	#4	450±	VARIES
F_1	VARIES	#4	300±	3330
F_2	11	#4	—	3330

LOWER UNIT 6100 X 1125 (TY. III)				
BAR	NO.	SIZE	SPAC.	LENGTH
A	22	#4	300	VARIES
B	21	#4	300	1405
B_1	VARIES	#4	300	1405
E_1	34	#4	450±	VARIES
E_2	6	#4	450±	VARIES
F_1	VARIES	#4	300±	4015
F_2	9	#4	—	4015
G	4	#4	—	1405
H	10	#4	150	800

LOWER UNIT 6100 X 1525 (TY. IV)				
BAR	NO.	SIZE	SPAC.	LENGTH
A	22	#4	300	VARIES
B	21	#4	300	1805
B_1	VARIES	#4	300	1805
E_1	36	#4	450±	VARIES
E_2	8	#4	450±	VARIES
F_1	VARIES	#4	300±	4015
F_2	11	#4	—	4015
G	4	#4	—	1805
H	13	#4	150	800

TY V = TY I & TY III BOLTED TOGETHER

TYPE VII = 2 -TY III BOLTED TOGETHER

TY VI = TY II & TY IV BOLTED TOGETHER

TYPE VIII = 2 -TY IV BOLTED TOGETHER

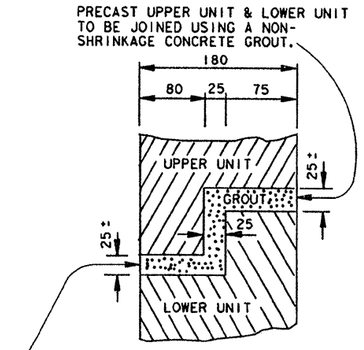

JOINT DETAIL

WHEN USING PRECAST UPPER UNIT, THIS SPACE IS FOR MAKING MINOR HORIZONTAL AND VERTICAL ADJUSTMENTS TO ACCOMODATE A FIT BETWEEN THE UPPER AND LOWER UNIT THAT ALLOWS FOR A MATCH LINE AND GRADE BETWEEN THE ROADWAY CURB AND THE UPPER UNIT OF THE INLET.

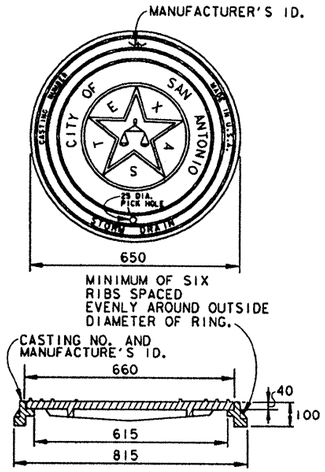

RING & COVER DETAIL

NOTE: FOR COVERS NOT ON SAN ANTONIO CITY STREETS, DELETE "CITY OF SAN ANTONIO & SCALES OF JUSTICE". MANHOLE RING AND COVER SHALL BE DESIGNED FOR HEAVY DUTY ROADWAY SERVICE AND SHALL INCLUDE A LOCKING DEVICE FOR THE COVER. THE LOAD BEARING SURFACE SHALL BE MACHINE GROUND.

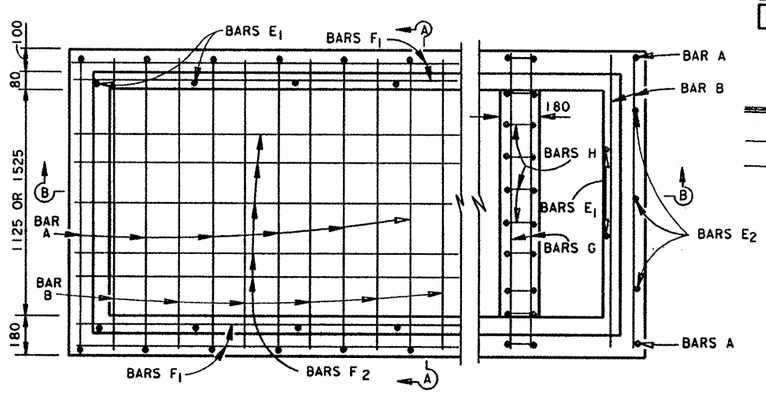

PLAN

BARS A

NOTES FOR PHASE CONSTRUCTION: (WHEN DIRECTED BY THE ENGINEER)

1. THE CURB INLET SHALL BE CONSTRUCTED TO A DEPTH "Hu" BELOW THE INLET GUTTER LINE ELEVATION.
2. CAP THE INLET WITH A STEEL PLATE APPROVED BY THE ENGINEER AND CONSTRUCT THE ROADWAY OVER THE PLATE.
3. AFTER THE RDWY. IS COMPLETED AND AFTER THE CURB IS PLACED (UP TO THE CONCRETE DEPRESSION) BUT PRIOR TO THE FINAL ACP, SAW CUT THE PAVEMENT, REMOVE THE PLATE AND COMPLETE THE UPPER PORTION OF THE CURB INLET.

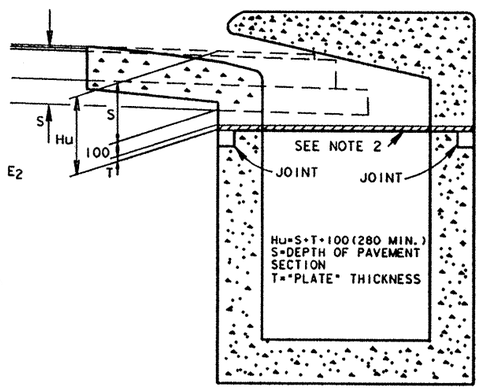

PHASE CONSTRUCTION

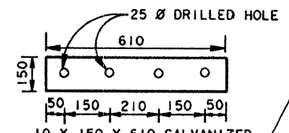

10 X 150 X 610 GALVANIZED STEEL (8 EA. PER INLET)

PLATE

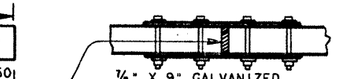

⅞" X 9" GALVANIZED HEX BOLT WITH GALVANIZED HEX NUT AND TWO WASHERS (16 EA. PER INLET)

TOP VIEW (WALL)

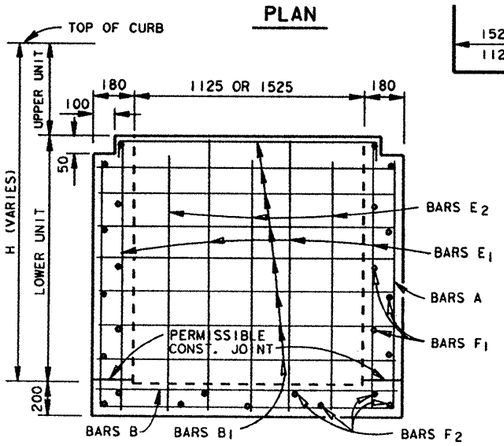

SECTION A-A

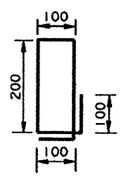

BAR H

GENERAL NOTES:

ALL CONCRETE SHALL BE CLASS "A".
ALL DIMENSIONS FOR REINFORCING STEEL ARE TO CENTER OF BARS.
ALL REINFORCING STEEL SHALL HAVE A MINIMUM COVER OF 50.
QUANTITIES SHOWN ARE FOR CONTRACTORS INFORMATION ONLY.
BOLTS, NUTS, WASHERS AND PLATES SHALL BE GALVANIZED.
BOLTS, NUTS, WASHERS, PLATES AND GASKETS ARS SUBSIDIARY TO INLETS.
THE CONTRACTOR SHALL PROVIDE AN ADEQUATE MEANS TO LIFT AND PLACE THE INLETS, WHEN USING PRECAST UNITS.
ALL BARS AT PIPE BLOCKOUT LOCATIONS SHALL BE CUT OR BEND.
ALL LOWER UNITS SHALL RECEIVE INVERT MORTAR SHAPING.
PIPE BLOCKOUTS IN INLET WALLS SHALL NOT EXCEED 75 BEYOND THE OUTER SHELL OF THE PIPE, TAKING INTO ACCOUNT THE SKEW OF THE PIPE AS NECESSARY.
COMMERCIAL STEPS (APPROVED BY THE ENGINEER) SHALL BE PROVIDED AND INSTALLED IN INLETS WHERE "H" EXCEEDS 1200.
CONSTRUCTION JOINT MAY BE RAISED A MAXIMUM OF 150.

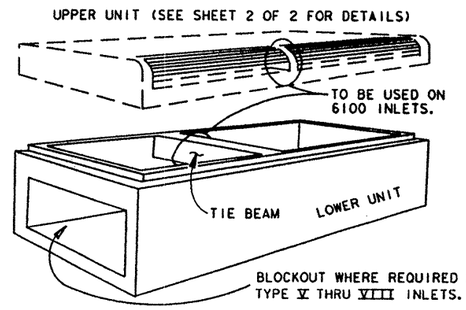

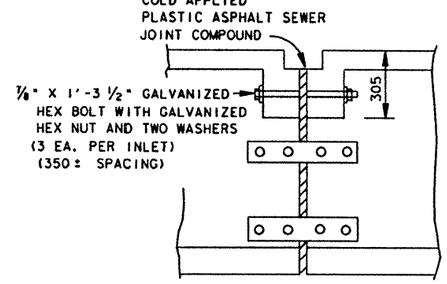

SIDE VIEW

TO BE USED ON TYPE V THRU VIII INLETS.

INLET BOLTING DETAILS

STRUCTURE DESIGN
/BRIDGE/STDS/CURBINLOW.DGN

SAN ANTONIO DISTRICT STANDARD

CURB INLET
TYPE I THRU VIII (M)
LOWER UNIT

SHEET 1 OF 2

FED. RD. DIV. NO.	PROJECT NO.			SHEET NO.
6	CD 2452 01 035			220
STATE	STATE DISTRICT	COUNTY		
TEXAS	SAT	BEXAR		
CONT.	SECT.	JOB	HIGHWAY NO.	
2452	01	035	LP 1604	

12/95

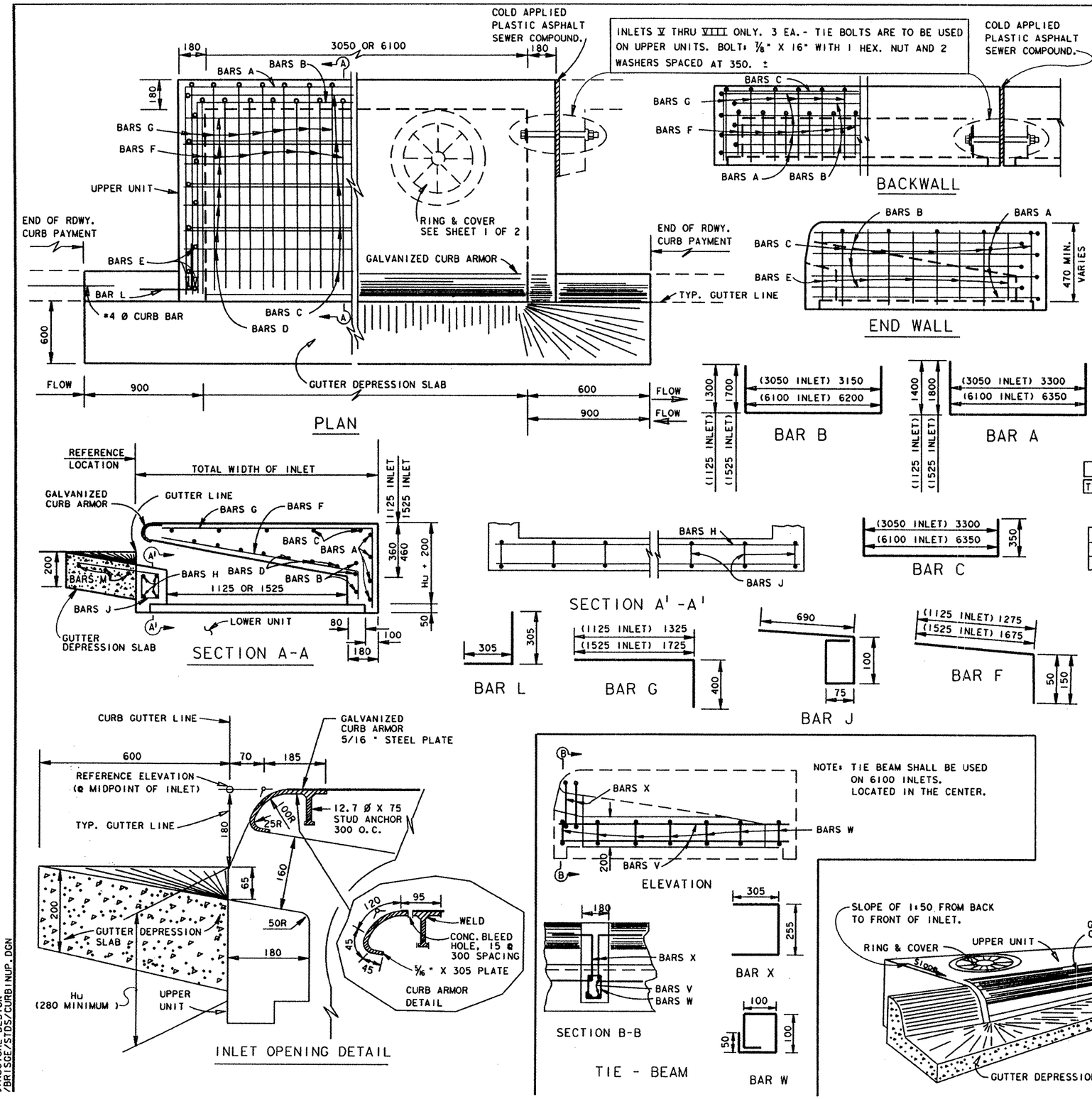

REINFORCING STEEL (FOR Hu = 280)

UPPER UNIT 3050 X 1125 (TY. I)					
BAR	NO.	SIZE	SPAC.	LENGTH	MASS
A	4	#4	—	6100	24
B	3	#4	—	5750	17
C	5	#4	300	4000	20
D	9	#4	150	3310	30
E	12	#4	300	350	4
F	21	#6	150	1425	67
G	22	#6	150	1725	85
H	4	#4	—	3310	13
J	12	#4	300	1190	14
L	4	#4	—	610	2
M	3	#4	—	4450	13
TOTAL				kg	289

UPPER UNIT 3050 X 1525 (TY. II)					
BAR	NO.	SIZE	SPAC.	LENGTH	MASS
A	4	#4	—	6900	27
B	3	#4	—	6550	20
C	7	#4	300	4000	28
D	11	#4	150	3310	36
E	16	#4	300	350	6
F	21	#6	150	1725	81
G	22	#6	150	2125	104
H	4	#4	—	3310	13
J	12	#4	300	1190	14
L	4	#4	—	610	2
M	3	#4	—	4450	13
TOTAL				kg	344

UPPER UNIT 6100 X 1125 (TY. III)					
BAR	NO.	SIZE	SPAC.	LENGTH	MASS
A	4	#4	—	9150	36
B	3	#4	—	8800	26
C	5	#4	300	7050	35
D	9	#4	150	6360	57
E	12	#4	300	350	4
F	41	#6	150	1425	131
G	42	#6	150	1725	162
H	4	#4	—	6360	25
J	22	#4	300	1190	26
L	4	#4	—	610	2
M	3	#4	—	7500	22
V	4	#4	—	1385	6
W	7	#4	200	500	3
X	4	#4	—	865	3
TOTAL				kg	538

UPPER UNIT 6100 X 1525 (TY. IV)					
BAR	NO.	SIZE	SPAC.	LENGTH	MASS
A	4	#4	—	9950	40
B	3	#4	—	9600	29
C	7	#4	300	7050	49
D	11	#4	150	6360	70
E	16	#4	300	350	6
F	41	#6	150	1725	158
G	42	#6	150	2125	199
H	4	#4	—	6360	25
J	22	#4	300	1190	26
L	4	#4	—	610	2
M	3	#4	—	7500	22
V	4	#4	—	1785	7
W	10	#4	200	500	5
X	4	#4	—	865	3
TOTAL				kg	641

TY V = TY I & TY III BOLTED TOGETHER
TY VII = TY III & TY III BOLTED TOGETHER

TY VI = TY II & TY IV BOLTED TOGETHER
TY VIII = TY IV & TY IV BOLTED TOGETHER

CONCRETE QUANTITIES

GUTTER DEPRESSION SLAB	m3
6100 INLET	0.9
3050 INLET	0.5

CONCRETE QUANTITIES

UPPER UNIT (ONLY)	m3
6100 X 1525	2.9
6100 X 1125	2.3
3050 X 1525	1.6
3050 X 1125	1.2

GENERAL NOTES:

ALL BARS INTERCEPTING MANHOLE RING & COVER SHALL BE CUT OR BENT.
ALL CONCRETE SHALL BE CLASS "A".
ALL DIMENSIONS RELATING TO REINFORCING STEEL ARE TO CENTER OF BARS.
ALL EXPOSED CORNERS SHALL BE CHAMFERED 20.
RING & COVER LOCATION WILL BE AS DIRECTED/APPROVED BY THE ENGINEER.
BOLTS, NUTS & WASHERS SHALL BE GALVANIZED.
QUANTITIES SHOWN ARE FOR CONTRACTORS INFORMATION ONLY.
GUTTER DEPRESSION SLAB SHALL RECEIVE A WOOD FLOAT FINISH.
SEE SHEET 1 OF 2 FOR FIT BETWEEN UPPER AND LOWER UNITS.
FACE OF INLET TO CONFORM TO FACE OF CURB LINE.
PAYMENT FOR CONC., STEEL, RING & COVER, STEPS, ETC. SHALL BE INCLUDED IN UNIT COST OF ITEM 465 "MANHOLES & INLETS.
ALL DIMENSIONS ARE IN mm UNLESS OTHERWISE SHOWN.

SAN ANTONIO DISTRICT STANDARD
CURB INLET
TYPE I THRU VIII (M)
UPPER UNIT

SHEET 2 OF 2

FED. RD. DIV. NO.	PROJECT NO.			SHEET NO.
6	CD 2452 01 035			221
STATE	STATE DISTRICT	COUNTY		
TEXAS	SAT	BEXAR		
CONT.	SECT.	JOB	HIGHWAY NO.	
2452	01	035	I.P. 1604	

12/95

STRUCTURE DESIGN
/BRISGE/STDS/CURBINUP.DGN

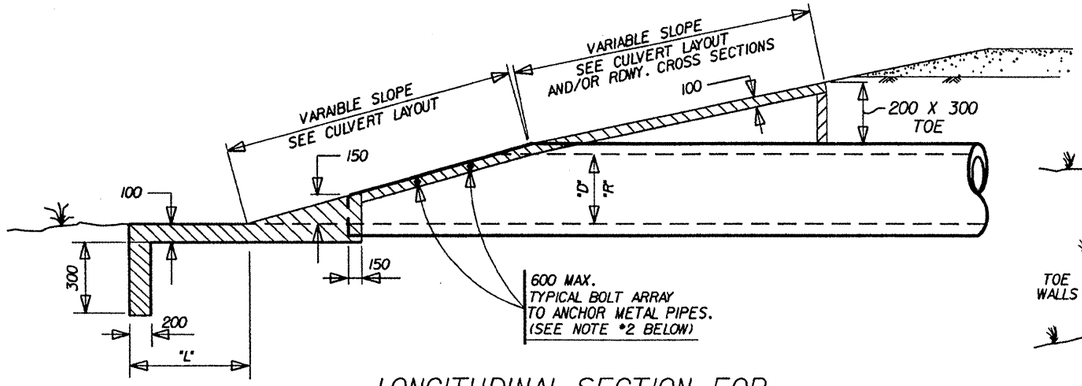

LONGITUDINAL SECTION FOR CIRCULAR & ARCH PIPES

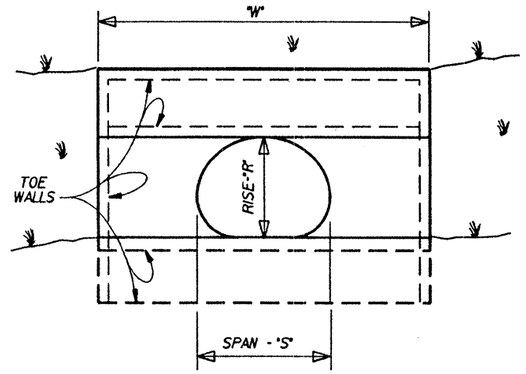

SINGLE C.M.P. ARCH PIPE CULVERT

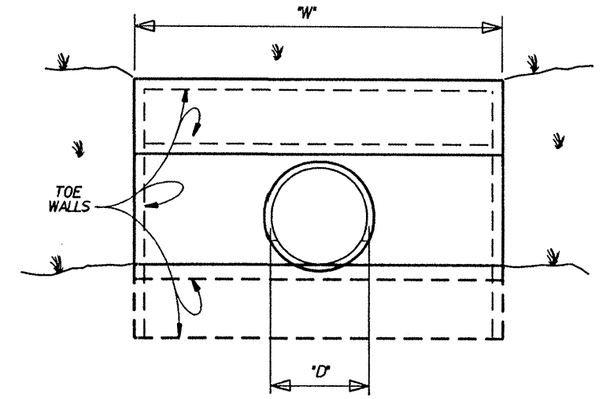

SINGLE CIRCULAR PIPE CULVERT

(CMP or RCP)

DIMENSIONS FOR CIRCULAR (CMP and RCP) PIPE CULVERTS

"D" INSIDE DIA. of PIPE	"L"	"G"		SINGLE	DOUBLE	TRIPLE	QUADRUPLE
		CGM	RCP	"W"			
450	600	360	225	1370	2185	3000	3810
550	750	380	250	1600	2540	3450	4065
600	900	430	275	1800	2855	3910	4965
750	1200	510	325	2250	3535	4820	6105
900	1500	580	375	2700	4205	5710	7215
1050	1800	660	425	3150	4885	6620	8355
1200	2100	740	475	3600	5565	7530	9495
1350	2400	860	575	4050	6285	8520	10755
1500	2700	970	600	4500	6995	9490	11985

"G" IS MEASURED BETWEEN THE OUTER SURFACES OF THE PIPES.

DIMENSIONS FOR C.M.P. ARCH PIPE CULVERTS

DESIGN SIZE	APPROX. ARCH DIM.		"L"	"G"	SINGLE	DOUBLE	TRIPLE	QUADRUPLE
	SPAN "S"	RISE "R"			"W"			
2	525	375	600	360	1300	2210	3120	4030
3	700	500	900	430	1725	2880	4035	5190
4	875	600	1200	510	2100	3510	4920	6330
5	1050	725	1500	580	2525	4180	5835	7490
6	1225	825	1800	660	2900	4810	6720	8630
7	1425	950	2100	740	3350	5540	7730	9920
8	1600	1075	2400	860	3775	6260	8745	11230
9	1775	1175	2700	970	4150	6920	9690	12460

BASED ON 68 X 13 CORRUGATION
"G" IS MEASURED BETWEEN THE OUTER SURFACES OF THE PIPES.

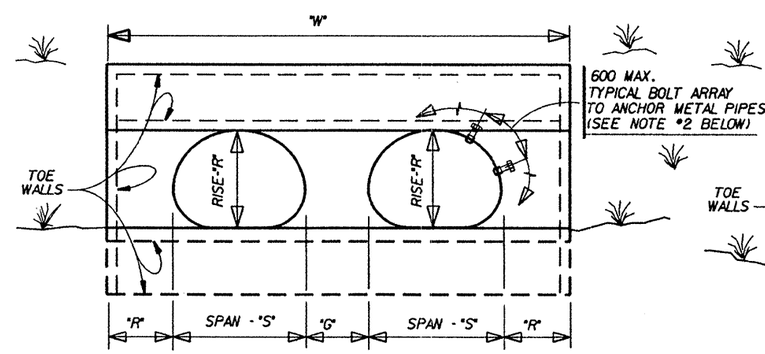

MULTIPLE C.M.P. ARCH PIPE CULVERT

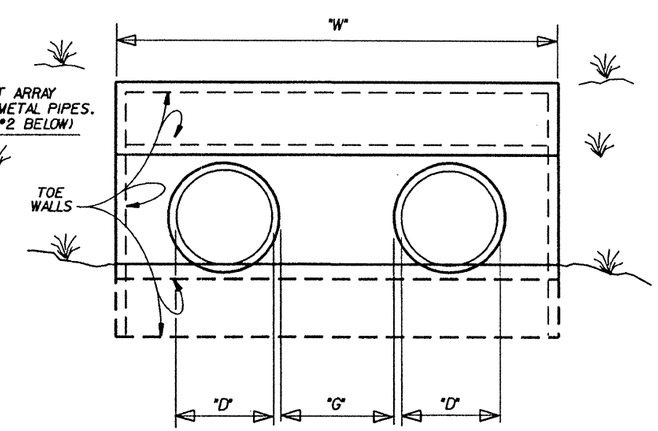

MULTIPLE CIRCULAR PIPE CULVERT

(CMP or RCP)

NOTES:

1.) FOR RIPRAP QUANTITIES AND SLOPES, SEE CULVERT LAYOUT SHEET. CONCRETE SHALL BE CLASS B UNLESS OTHERWISE SHOWN IN THE PLANS.

2.) ALL METAL PIPES (CIRCULAR AND/OR ARCH) SHALL HAVE 5/8" X 6" GALVANIZED BOLTS WITH 2 HEX NUTS AT 600 mm MAX. CENTERS TO ANCHOR THE PIPE TO THE CONCRETE. THIS WORK WILL BE SUBSIDIARY TO THE RIPRAP HEADWALL.

3.) FOR CONCRETE ARCH PIPES, THE CMP ARCH PIPE CULVERT DIMENSIONS WILL HAVE TO BE ADJUSTED FOR THE PIPE WALL THICKNESS.

4.) FOR PIPES LARGER THAN SHOWN, USE THE CLEAR DISTANCE BETWEEN PIPES SHOWN IN ITEMS 460 AND/OR 464.

5.) IF THE SIDES OF THE HEADWALL IS ADJACENT TO A RIPRAP SLOPE AND IF THE TOP OF THE HEADWALL IS ADJACENT TO THE ROADWAY FOUNDATION OR RIPRAP SLOPE, THE SIDE AND TOP TOE WALLS MAY BE ELIMINATED IF APPROVED BY THE ENGINEER.

6.) ALL DIMENSIONS ARE IN mm UNLESS SHOWN OTHERWISE.

SAN ANTONIO DISTRICT STANDARD
RIPRAP HEADWALL (M)

FED.RD. DIV.NO.	PROJECT NO.		SHEET NO.
6	CD 2452 01035		222
STATE	STATE DISTRICT	COUNTY	
TEXAS	SAT	BEXAR	
CONT.	SECT.	JOB	HIGHWAY NO.
2452	01	035	LP 1604

11/95

STRUCTURE DESIGN
/BRIDGE/STDS/rh5hdwl.dgn

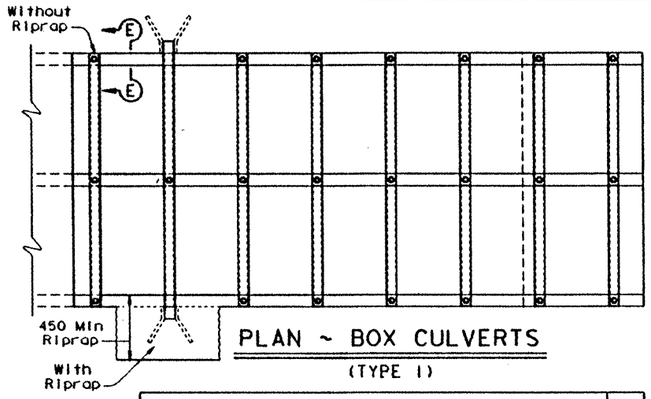

PLAN ~ BOX CULVERTS

(TYPE I)

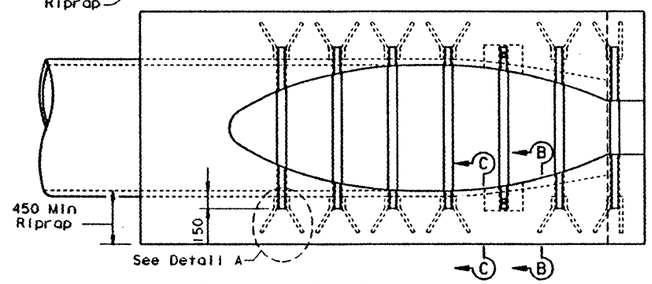

PLAN ~ CONCRETE PIPE

(TYPE II)

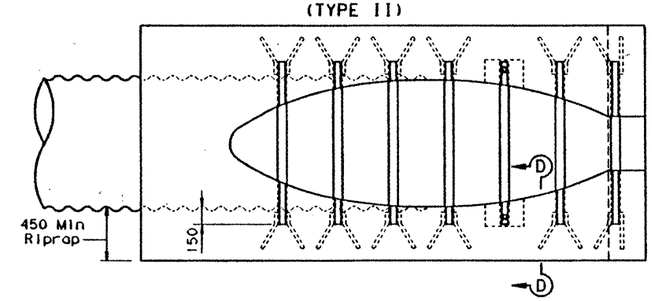

PLAN ~ CORRUGATED METAL PIPE

(TYPE II)

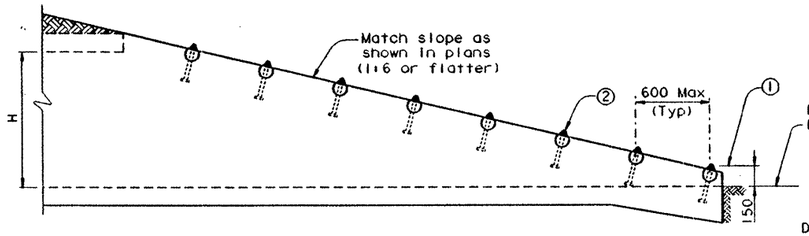

END TREATMENT ~ MULTIPLE OR SINGLE BOX CULVERTS

① Top of Safety Pipe Runner (Typ)

② Third Pipe Runner shall always have bolted connection for clean out access

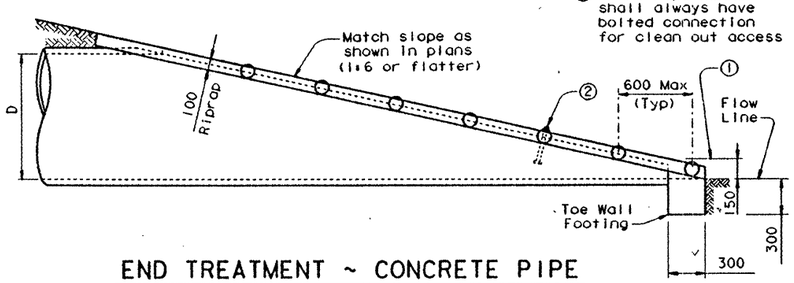

END TREATMENT ~ CONCRETE PIPE

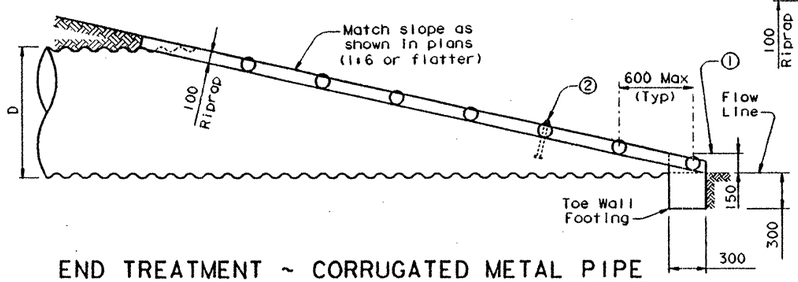

END TREATMENT ~ CORRUGATED METAL PIPE

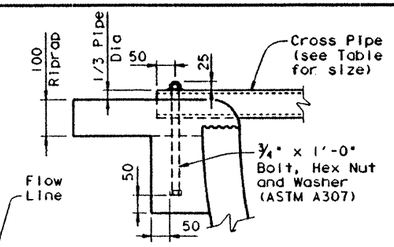

SECTION B-B

Deepen and widen riprap around end of cross pipe and provide bolted connection to allow cleanout access

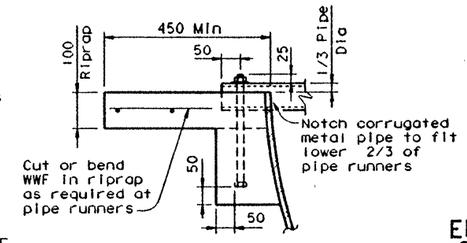

SECTION D-D

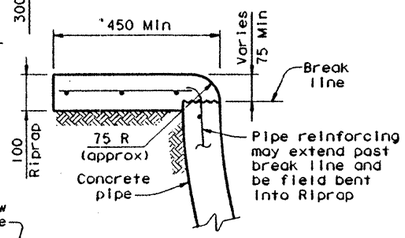

SECTION C-C

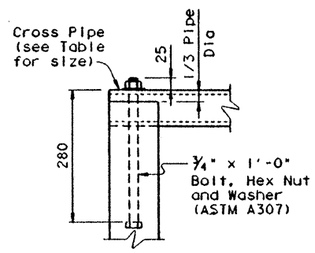

SECTION E-E

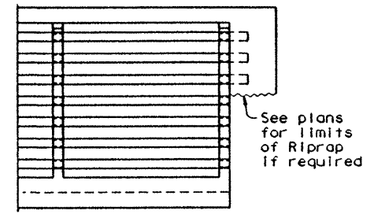

END VIEW ~ MULTIPLE OR SINGLE BOX CULVERTS

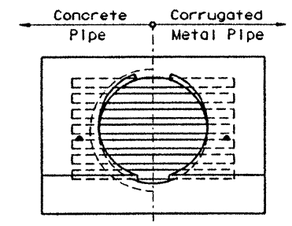

END VIEW ~ CONCRETE OR CORRUGATED METAL PIPE

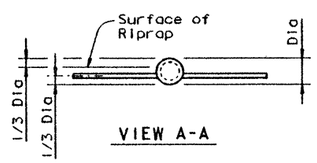

VIEW A-A

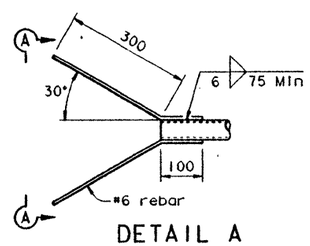

DETAIL A

REQUIRED PIPE SIZES FOR GIVEN PIPE YIELD

Culvert Size ("H" or "D")	Pipe Runner Length	240 MPa ASTM A53, Ty E and S Gr B			290 MPa ASTM A500, Gr B			360 MPa API 5LX52		
		Nom	OD	ID	Nom	OD	ID	Nom	OD	ID
750	1,050	80 mm XS	88.9	73.7	65 mm XXS	73.0	45.0	65 mm XXS	73.0	45.0
		90 mm STD	102.0	90.1	80 mm STD	88.9	77.9	80 mm STD	88.9	77.9
900	1,200	80 mm XXS	88.9	58.4	80 mm XS	88.9	73.7	80 mm STD	88.9	77.9
		90 mm XS	102.0	85.4	90 mm STD	102.0	90.1			
1,050	1,350	80 mm XXS	88.9	58.4	80 mm XXS	88.9	58.4	80 mm XS	88.9	73.7
		90 mm XS	102.0	85.4	90 mm XS	102.0	85.4	90 mm STD	102.0	90.1
		100 mm STD	114.0	102.0	100 mm STD	114.0	102.0			
1,200	1,500	80 mm XXS	88.9	58.4	80 mm XXS	88.9	58.4	80 mm XXS	88.9	58.4
		100 mm XS	114.0	97.2	90 mm XS	102.0	85.4	90 mm STD	102.0	90.1
					100 mm STD	114.0	102.0			
1,350	1,650	100 mm XS	114.0	97.2	80 mm XXS	88.9	58.4	80 mm XXS	88.9	58.4
		125 mm STD	141.0	128.0	100 mm STD	114.0	102.0	90 mm XS	102.0	85.4
								100 mm STD	114.0	102.0
1,500	1,800	100 mm XS	114.0	97.2	100 mm XS	114.0	97.2	80 mm XXS	89.9	58.4
		125 mm STD	141.0	128.0	125 mm STD	141.0	128.0	90 mm XS	102.0	85.4
								100 mm STD	114.0	102.0

DESIGN: Safety Pipe Runners are designed for a traversing load of 44,480 N at yield as recommended by Research Report 280-2F, Safety Treatment of Roadside Parallel-Drainage Structures, Texas Transportation Institute, June 1981.

GENERAL NOTES:

These details are to be used as a guide for installation of safety pipe runners for parallel drainage structures where out of control vehicles may impact the openings approximately perpendicular to the safety pipe runners. Some installations may require the preparation of special details. In general, safety pipe runners are installed on parallel drainage structures at maximum spacings of approximately 600 mm.

Installation of safety pipe runners for single or multiple culverts will be in accordance with the details shown if the use of safety pipe runners are specified elsewhere in the plans.

Payment for riprap (if required) and toe wall footing is included in the price bid for each Safety Pipe End Treatment.

All dimensions are in millimeters unless otherwise noted.

DISCLAIMER:
The use of this standard is governed by the "Texas Engineering Practice Act". No warranty of any kind is made by TxDOT for any purpose whatsoever. TxDOT assumes no responsibility for the conversion of this standard to other formats or for incorrect results or damages resulting from its use.

ACC: (LV=1,3 for Metric)

LEVELS DISPLAYED: 1 3

Texas Department of Transportation
Design Division (Bridge)

PARALLEL DRAINAGE SAFETY PIPE RUNNERS

PD-SPR(M)

FILE: psprmstd.dgn	DN: MPW	CK: TER	DW: MCB	CK: TER	STD: B16M
ORIG DATE: October 1996	DIST 15	FED REG 6	FEDERAL AID PROJECT		SHEET 225
REVISIONS	COUNTY BEXAR		CONTROL	SECT	JOB 1604 HIGHWAY

2452-1-35

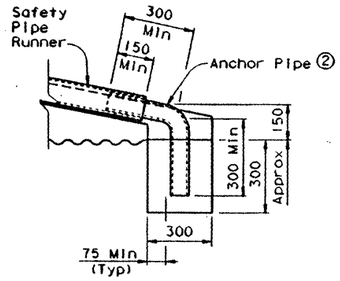

OPTION A

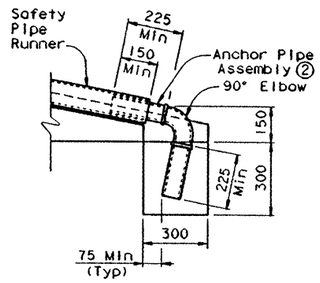

OPTION B

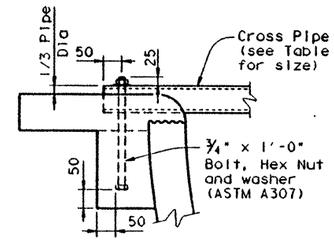

SECTION B-B

Deepen and widen Riprap around end of cross pipe and provide bolted connection to allow cleanout access

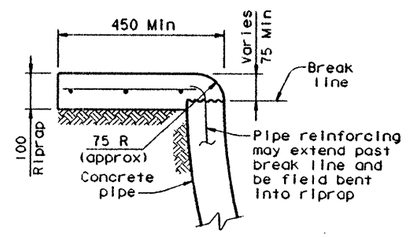

SECTION C-C

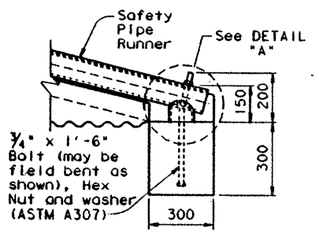

OPTION C

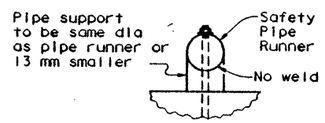

DETAIL "A"

Note:
Any of the above Safety Pipe Runner Lower Anchorage options may be used.

SECTION A-A

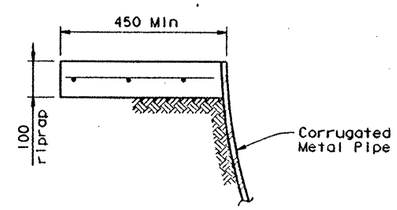

SECTION D-D

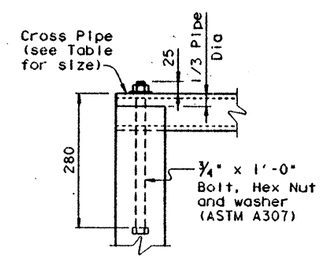

SECTION E-E

"L" FOR VARIOUS CULVERT SIZES AND SIDE SLOPES ③				
Size	1:3 Slope	1:4 Slope	1:5 Slope	1:6 Slope
H = 600	1,900	2,475	3,050	3,650
D = 900	2,450	3,200	3,950	4,725
H = 900	2,850	3,700	4,600	5,475
D = 1,050	2,925	3,825	4,725	5,625
H = 1,050	3,325	4,325	5,350	6,375
D = 1,200	3,400	4,425	5,475	6,550
H = 1,200	3,800	4,950	6,125	7,300
D = 1,350	3,875	5,050	6,250	7,450
H = 1,350	4,275	5,575	6,875	8,200
D = 1,500	4,350	5,675	7,000	8,375
H = 1,500	4,750	6,175	7,650	9,125

MAXIMUM PIPE "L" FOR A GIVEN PIPE SIZE AND YIELD			
Nom Dia \ Yield	240 MPa ASTM A53 Ty E and S Gr B	290 MPa ASTM A500 Gr B	360 MPa API5LX52
80 mm (OD=88.9 mm)	3,350	4,000	4,975
90 mm (OD=102 mm)	4,650	5,575	6,900
100 mm (OD=114 mm)	6,250	7,500	9,275
125 mm (OD=141 mm)	10,600	~	~

② Anchor Pipe may be any of the above materials and shall have an O.D. of 6 mm to 16 mm less than the I.D. of the Safety Pipe Runners.
③ For anchor pipe using Option C for lower anchorage, add 375 mm to the value for "L" in the above table.

DESIGN: Safety Pipe Runners are designed for a traversing load of 8,000 N at yield as recommended by Research Report 280-1, Safety Treatment of Roadside Cross-Drainage Structures, Texas Transportation Institute, March 1981.

GENERAL NOTES:

These details are to be used as a guide for installation of safety pipe runners for cross-drainage structures where out of control vehicles may traverse the openings approximately perpendicular to the safety pipe runners. Some installations may require the preparation of special details. In general, safety pipe runners are installed on cross-drainage structures at maximum spacings of approximately 750 mm.

Installation of safety pipe runners for single or multiple culverts will be in accordance with the details shown if the use of safety pipe runners are specified elsewhere in the plans.

Payment for riprap (if required) and toe wall footing is included in the price bid for each Safety Pipe End Treatment.

All dimensions are in millimeters unless otherwise noted.

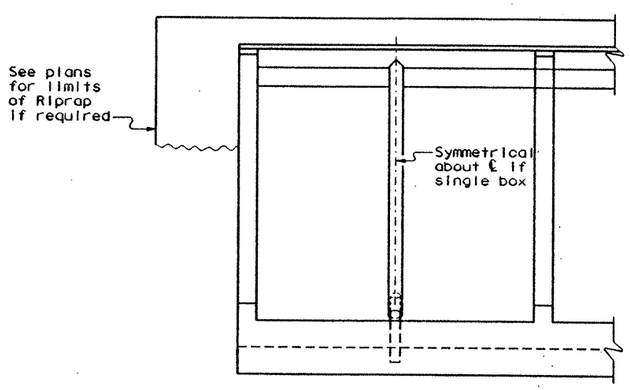

END VIEW ~ MULTIPLE OR SINGLE BOX CULVERTS

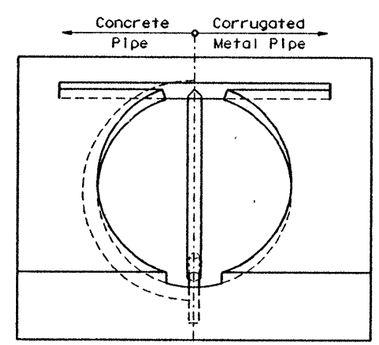

END VIEW ~ CONCRETE OR CORRUGATED METAL PIPE

SHEET 2 OF 2

Texas Department of Transportation
Design Division (Bridge)

CROSS DRAINAGE SAFETY PIPE RUNNERS

CD-SPR(M)

FILE: csprmstd.dgn	DN: MPM	CK: TER	DW: MCB	CK: TER	STD: BISM
ORIG DATE: October 1996	DIST 15	FED REG 6	FEDERAL AID PROJECT		SHEET 124
REVISIONS	COUNTY BEXAR	CONTROL	SECT	JOB	HIGHWAY 1604

DISCLAIMER:
The use of this standard is governed by the "Texas Engineering Practice Act". No warranty of any kind is made by TxDOT for any purpose whatsoever. TxDOT assumes no responsibility for the conversion of this standard to other formats or for incorrect results or damages resulting from its use.

LEVELS DISPLAYED 1 3 ACC: (LV=1,3 for Metric)

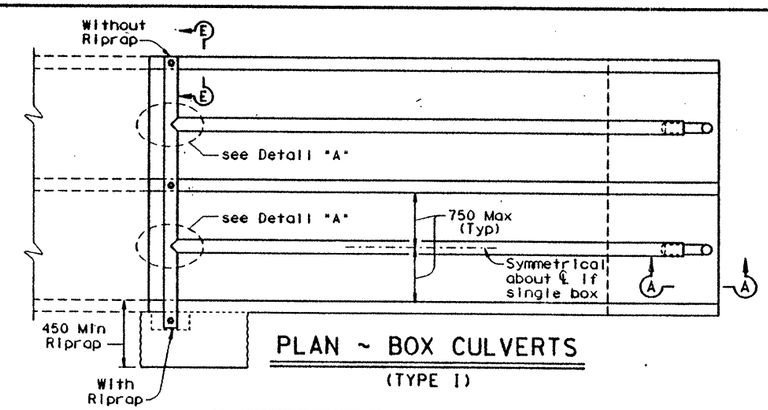

PLAN ~ BOX CULVERTS

(TYPE I)

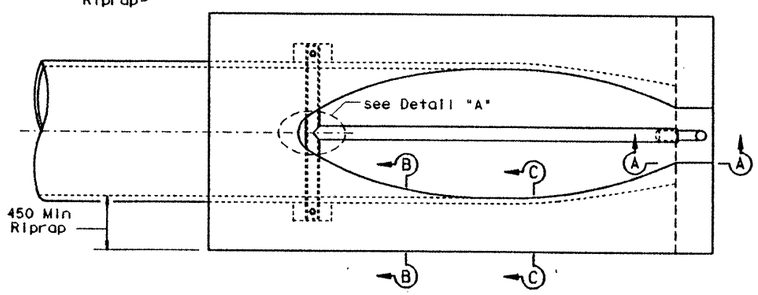

PLAN ~ CONCRETE PIPE

(TYPE II)

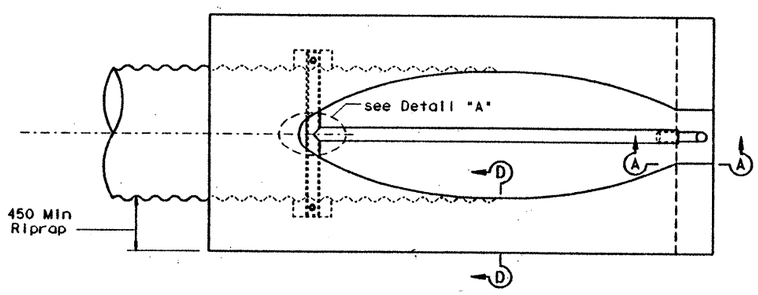

PLAN ~ CORRUGATED METAL PIPE

(TYPE II)

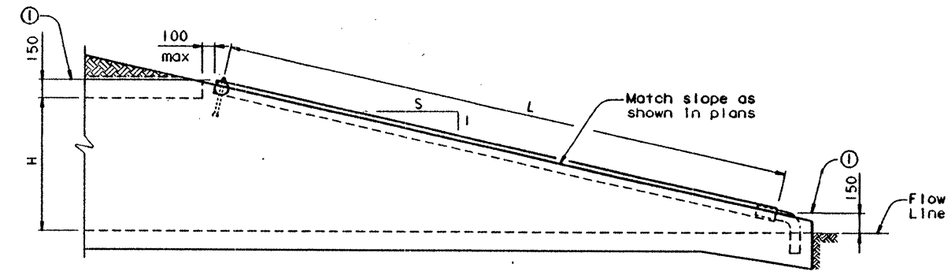

END TREATMENT ~ MULTIPLE OR SINGLE BOX CULVERTS

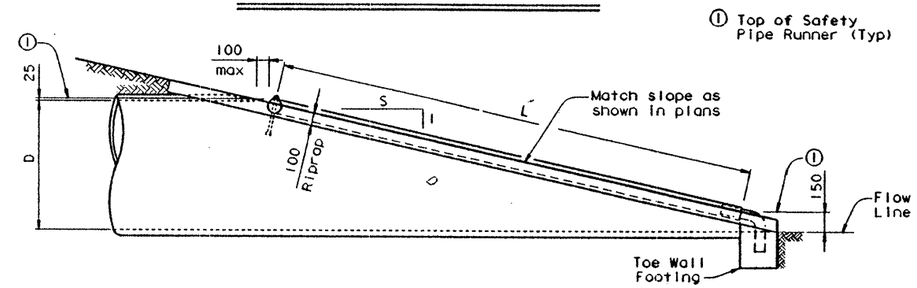

END TREATMENT ~ CONCRETE PIPE

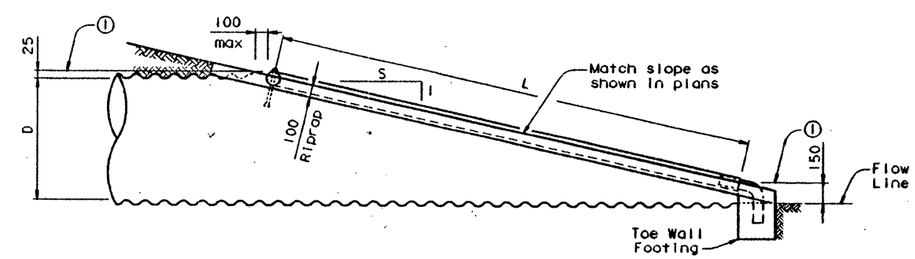

END TREATMENT ~ CORRUGATED METAL PIPE

Note: See Sheet 2 of 2 for Sections A-A, B-B, C-C, D-D and E-E.

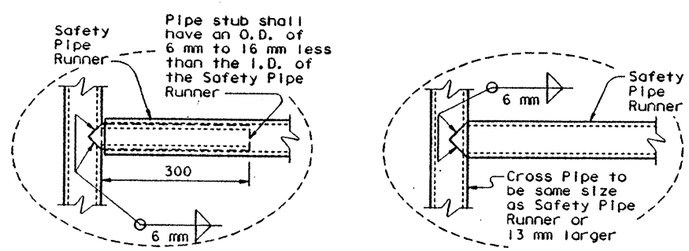

OPTION A

OPTION B

DETAIL A

DISCLAIMER:
The use of this standard is governed by the "Texas Engineering Practice Act". No warranty of any kind is made by TxDOT for any purpose whatsoever. TxDOT assumes no responsibility for the conversion of this standard to other formats or for incorrect results or damages resulting from its use.

LEVELS DISPLAYED 1 3 ACC: (LV=1,3 for Metric)

SHEET 1 OF 2

Texas Department of Transportation
Design Division (Bridge)

CROSS DRAINAGE SAFETY PIPE RUNNERS

CD-SPR(M)

FILE: csprmstd.dgn	DN: MPM	CK: TER	DW: MCB	CK: TER	STD: BISM
ORIG DATE: October 1996	DIST 15	FED REG 6	FEDERAL AID PROJECT #		SHEET 023
REVISIONS	COUNTY BEXAR		CONTROL	SECT	JOB	HIGHWAY 1604

0452-1-25

TABLE OF DIMENSIONS

① CULVERT SIZE S	H	SLAB T	WALL U	WINGWALL Z	L	R	W	Y	X	APRON V NUMBER OF SPANS 1	2	3	4	5	6
900	600	175	175	1,075	2,230	225	850	300	250	1,294	2,407	3,520	4,633	5,746	6,859
1,200	600	175	175	1,075	2,230	225	850	300	250	1,605	3,028	4,452	5,875	7,299	8,722
1,500	600	175	175	1,075	2,230	225	850	300	250	1,915	3,649	5,383	7,118	8,852	10,586
1,500	600	200	175	1,100	2,280	225	850	300	250	1,915	3,649	5,383	7,118	8,852	10,586
900	900	175	175	1,375	2,850	225	950	300	350	1,294	2,407	3,520	4,633	5,746	6,859
1,200	900	175	175	1,375	2,850	225	950	300	350	1,605	3,028	4,452	5,875	7,299	8,722
1,500	900	175	175	1,375	2,850	225	950	300	350	1,915	3,649	5,383	7,118	8,852	10,586
1,800	900	175	175	1,375	2,850	225	950	300	350	2,226	4,271	6,315	8,360	10,405	12,449
2,100	900	175	175	1,375	2,850	225	950	300	350	2,536	4,892	7,247	9,602	11,957	14,313
1,500	900	200	175	1,400	2,900	225	950	300	350	1,915	3,649	5,383	7,118	8,852	10,586
1,800	900	200	175	1,400	2,900	225	950	300	350	2,226	4,271	6,315	8,360	10,405	12,449
2,100	900	200	175	1,400	2,900	225	950	300	350	2,536	4,892	7,247	9,602	11,957	14,313
1,800	900	225	200	1,425	2,950	225	950	300	350	2,278	4,348	6,419	8,489	10,560	12,630
2,100	900	225	200	1,425	2,950	225	950	300	350	2,588	4,969	7,350	9,732	12,113	14,494
2,100	900	250	200	1,450	3,000	250	950	300	350	2,588	4,969	7,350	9,732	12,113	14,494
1,200	1,200	175	175	1,675	3,470	225	1,125	350	475	1,605	3,028	4,452	5,875	7,299	8,722
1,500	1,200	175	175	1,675	3,470	225	1,125	350	475	1,915	3,649	5,383	7,118	8,852	10,586
1,800	1,200	175	175	1,675	3,470	225	1,125	350	475	2,226	4,271	6,315	8,360	10,405	12,449
2,100	1,200	175	175	1,675	3,470	225	1,125	350	475	2,536	4,892	7,247	9,602	11,957	14,313
2,400	1,200	175	175	1,675	3,470	225	1,125	350	475	2,847	5,513	8,179	10,845	13,510	16,176
1,500	1,200	200	175	1,700	3,520	225	1,125	350	475	1,915	3,649	5,383	7,118	8,852	10,586
1,800	1,200	200	175	1,700	3,520	225	1,125	350	475	2,226	4,271	6,315	8,360	10,405	12,449
2,100	1,200	200	175	1,700	3,520	225	1,125	350	475	2,536	4,892	7,247	9,602	11,957	14,313
2,400	1,200	200	175	1,700	3,520	225	1,125	350	475	2,847	5,513	8,179	10,845	13,510	16,176
1,800	1,200	225	200	1,725	3,570	225	1,125	350	475	2,278	4,348	6,419	8,489	10,560	12,630
2,100	1,200	225	200	1,725	3,570	225	1,125	350	475	2,588	4,969	7,350	9,732	12,113	14,494
2,400	1,200	225	200	1,725	3,570	225	1,125	350	475	2,899	5,590	8,282	10,974	13,666	16,357
2,100	1,200	250	200	1,750	3,620	250	1,125	350	475	2,588	4,969	7,350	9,732	12,113	14,494
2,400	1,200	250	200	1,750	3,620	250	1,125	350	475	2,899	5,590	8,282	10,974	13,666	16,357
2,400	1,200	275	225	1,775	3,680	275	1,125	350	475	2,951	5,668	8,386	11,103	13,821	16,539

REINFORCING STEEL ~ 2 CULVERT APRONS

BARS F #4 at 300 LGTH = V NO.	NUMBER OF SPANS 1 kg	2 kg	3 kg	4 kg	5 kg	6 kg	LGTH	BARS A2 ~ #4 at 300 NO.	NUMBER OF SPANS 1 kg	NO.	2 kg	NO.	3 kg	NO.	4 kg	NO.	5 kg	NO.	6 kg
4	5	10	14	18	23	27	1,300	10	13	18	23	24	31	32	41	40	52	46	59
4	6	12	18	23	29	35	1,300	12	16	22	28	30	39	40	52	50	65	60	78
4	8	15	21	28	35	42	1,300	14	18	26	34	36	47	48	62	60	78	72	93
4	8	15	21	28	35	42	1,300	14	18	26	34	36	47	48	62	60	78	72	93
4	5	10	14	18	23	27	1,400	10	14	18	25	24	33	32	45	40	56	46	64
4	6	12	18	23	29	35	1,400	12	17	22	31	30	42	40	56	50	70	60	83
4	8	15	21	28	35	42	1,400	14	19	26	36	36	50	48	67	60	83	72	100
4	9	17	25	33	41	49	1,400	16	22	30	42	44	61	56	78	70	97	84	117
4	10	19	29	38	48	57	1,400	18	25	34	47	50	70	66	92	80	111	96	134
4	8	15	21	28	35	42	1,400	14	19	26	36	36	50	48	67	60	83	72	100
4	9	17	25	33	41	49	1,400	16	22	30	42	44	61	56	78	70	97	84	117
4	10	19	29	38	48	57	1,400	18	25	34	47	50	70	66	92	80	111	96	134
4	9	17	26	34	42	50	1,400	16	22	30	42	44	61	58	81	72	100	86	120
4	10	20	29	39	48	58	1,400	18	25	34	47	50	70	66	92	82	114	98	136
4	10	20	29	39	48	58	1,430	18	26	34	48	50	71	66	94	82	117	98	139
4	6	12	18	23	29	35	1,530	12	18	22	33	30	46	40	61	50	76	60	91
4	8	15	21	28	35	42	1,530	14	21	26	40	36	55	48	73	60	91	72	109
4	9	17	25	33	41	49	1,530	16	24	30	46	44	67	56	85	70	106	84	128
4	10	19	29	38	48	57	1,530	18	27	34	52	50	76	66	100	80	122	96	146
4	11	22	33	43	54	64	1,530	20	30	38	58	56	85	74	113	92	140	108	164
4	8	15	21	28	35	42	1,530	14	21	26	40	36	55	48	73	60	91	72	109
4	9	17	25	33	41	49	1,530	16	24	30	46	44	67	56	85	70	106	84	128
4	11	22	33	43	54	64	1,530	20	30	38	58	56	85	74	113	92	140	108	164
4	10	20	29	39	48	58	1,530	18	27	34	52	50	76	66	100	82	125	98	149
4	12	22	33	44	54	65	1,530	20	30	38	58	56	85	74	113	92	140	110	167
4	10	20	29	39	48	58	1,550	18	28	34	52	50	77	66	102	82	126	98	151
4	12	22	33	44	54	65	1,550	20	31	38	59	56	86	74	114	92	142	110	169
4	12	23	33	44	55	66	1,580	20	31	38	60	56	88	76	119	94	148	112	176

TOTAL QUANTITIES ~ 4 WINGS AND 2 APRONS

NUMBER OF SPANS 1 CONC (m^3)	1 REINF (kg)	2 CONC (m^3)	2 REINF (kg)	3 CONC (m^3)	3 REINF (kg)	4 CONC (m^3)	4 REINF (kg)	5 CONC (m^3)	5 REINF (kg)	6 CONC (m^3)	6 REINF (kg)
6.1	341	6.5	356	6.9	368	7.3	382	7.8	398	8.2	409
6.2	345	6.8	363	7.3	380	7.8	398	8.3	417	8.8	436
6.4	349	7.0	372	7.6	391	8.3	413	8.9	436	9.5	458
6.6	349	7.2	372	7.8	391	8.5	413	9.1	436	9.8	458
9.0	509	9.4	525	9.8	537	10.2	553	10.6	569	11.0	581
9.1	513	9.6	533	10.1	550	10.7	569	11.2	589	11.7	608
9.2	517	9.8	541	10.5	561	11.1	585	11.7	608	12.4	632
9.3	521	10.1	549	10.8	576	11.6	601	12.3	628	13.1	656
9.4	525	10.3	556	11.2	589	12.0	620	12.9	649	13.7	681
9.5	517	10.1	541	10.7	561	11.4	585	12.0	608	12.7	632
9.6	521	10.3	549	11.1	576	11.8	601	12.6	628	13.3	656
9.7	525	10.6	556	11.4	589	12.3	620	13.2	649	14.0	681
9.8	521	10.6	549	11.4	577	12.2	605	12.9	632	13.7	660
10.0	525	10.8	557	11.7	589	12.6	621	13.5	652	14.4	684
10.5	526	11.4	558	12.4	590	13.3	623	14.2	655	15.2	687
12.8	863	13.3	884	13.9	903	14.4	923	14.9	944	15.5	965
12.9	868	13.5	894	14.2	915	14.9	940	15.5	965	16.2	990
13.0	872	13.8	902	14.6	931	15.4	957	16.1	986	16.9	1,016
13.1	876	14.0	910	14.9	944	15.8	977	16.7	1,009	17.6	1,042
13.2	880	14.3	919	15.3	957	16.3	995	17.3	1,033	18.3	1,067
13.2	868	13.9	894	14.5	915	15.2	940	15.9	965	16.6	990
13.3	872	14.1	902	14.9	931	15.7	957	16.5	986	17.3	1,016
13.4	876	14.3	910	15.3	944	16.2	977	17.1	1,009	18.0	1,042
13.5	880	14.6	919	15.6	957	16.7	995	17.7	1,033	18.7	1,067
13.6	872	14.4	902	15.3	932	16.1	961	16.9	990	17.7	1,020
13.7	876	14.7	911	15.6	944	16.6	978	17.5	1,012	18.5	1,046
13.9	881	14.9	919	16.0	957	17.1	996	18.2	1,033	19.2	1,071
14.5	877	15.5	911	16.5	945	17.5	980	18.4	1,013	19.4	1,048
14.6	882	15.7	920	16.8	958	18.0	997	19.1	1,035	20.2	1,073
15.4	882	16.6	922	17.8	960	19.0	1,002	20.1	1,042	21.3	1,081

TABLE OF REINFORCING STEEL FOR 4 WINGWALLS

WING SIZE H	L ②	BARS J NO.	SIZE	SPA	LGTH	MASS	BARS A1 NO.	SIZE	SPA	LGTH	MASS	BARS C1 #4 at 450 NO.	LGTH	MASS	BARS C2 #4 at 450 NO.	LGTH	MASS	BARS C3 #4 at 450 NO.	LGTH	MASS	BARS D1 #5 at 450 NO.	LGTH	MASS	BARS D2 #5 at 450 NO.	LGTH	MASS	BARS E #4 at 450 NO.	LGTH	MASS	BARS B #4 at 300 NO.	LGTH	MASS
600	2,280	36	#4	300	1,730	62	36	#4	300	1,480	53	8	2,160	17	8	2,240	18	8	2,160	17	8	2,000	25	8	2,000	25	24	1,250	30	28	2,730	76
900	3,000	48	#4	270	2,100	100	48	#4	270	1,600	76	12	2,880	34	12	2,960	35	8	2,880	23	12	2,000	37	12	2,000	37	32	1,600	51	28	3,480	97
1,200	3,680	92	#4	170	2,500	229	92	#4	170	1,800	165	16	3,560	57	16	3,640	58	8	3,560	28	16	2,000	50	16	2,000	50	36	1,925	69	32	4,190	133
1,500	4,450	92	#5	200	3,000	428	92	#5	200	2,050	293	16	4,330	69	16	4,410	70	8	4,330	34	16	2,000	50	16	2,000	50	44	2,300	101	32	5,000	159
1,800	5,070	124	#5	170	3,400	654	124	#5	170	2,230	429	20	4,950	98	20	5,030	100	12	4,950	59	20	2,000	62	20	2,000	62	52	2,600	134	36	5,640	202
2,100	5,690	176	#5	130	3,750	1,024	176	#5	130	2,380	650	24	5,570	133	24	5,650	135	12	5,570	66	24	2,000	74	24	2,000	74	56	2,900	161	40	6,280	250
2,400	6,320	160	#6	160	4,150	1,484	160	#6	160	2,530	905	24	6,200	148	24	6,280	150	12	6,200	74	24	2,000	74	24	2,000	74	60	3,200	191	40	6,930	276
2,700	6,940	216	#6	130	4,550	2,197	216	#6	130	2,700	1,303	28	6,820	190	28	6,900	192	12	6,820	81	28	2,000	87	28	2,000	87	68	3,500	237	44	7,570	331
3,000	7,560	256	#6	120	4,900	2,804	256	#6	120	2,830	1,619	32	7,440	237	32	7,520	239	12	7,440	89	32	2,000	99	32	2,000	99	72	3,800	272	44	8,210	359

① S, H, T and U dimensions must match corresponding dimensions for Single or Multiple Box Culverts

② Wingwall length "L" varies ~ maximum "L" value and corresponding reinforcing shown for each value of "H"

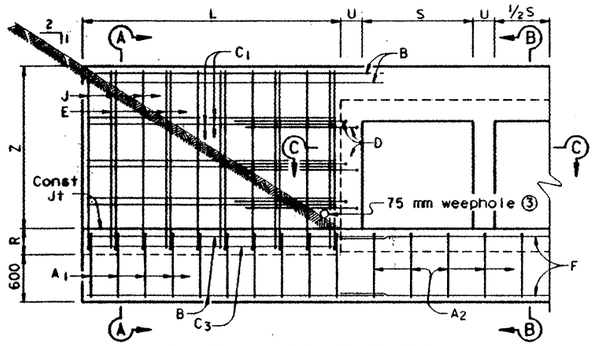

PARTIAL ELEVATION

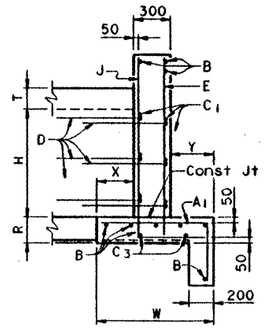

SECTION A-A

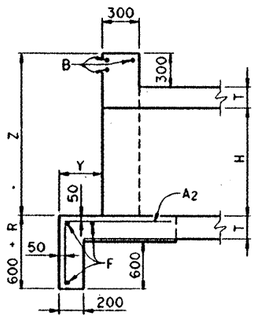

SECTION B-B

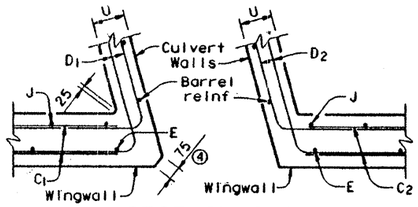

SECTION C-C

③ Fill around drains with coarse gravel

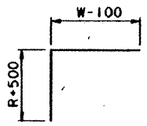

BARS A1

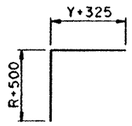

BARS A2

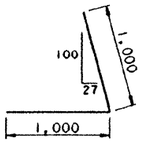

BARS D1

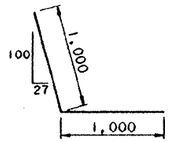

BARS D2

BARS J

④ At discharge end, chamfer may be 20 mm

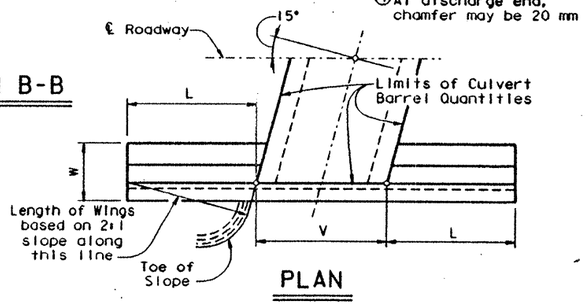

PLAN

GENERAL NOTES:

Designed according to AASHTO 1992 Standard and Interim Specifications.

All reinforcing steel shall be Grade 420 (fy = 420 MPa).

All concrete shall have a minimum 28 day compressive strength of 21 MPa.

Reinforcing bars shall be adjusted to provide a minimum of 35 mm clear cover.

Provide Weep Holes for H = 1,500 mm and greater.

The bottom slab of the barrel, wing footing and toewalls shall be placed in one continuous operation.

All dimensions are in millimeters and masses are in kilograms unless otherwise noted.

Texas Department of Transportation
Design Division (Bridge)

PARALLEL WINGS
FOR 15° SKEW BOX CULVERTS
(H = 600 mm - 1,200 mm)

PW-15-1.2(M)

FILE: pw1512st.dgn	DN: TER	CK: SDA	DW: MCB	CK: TER	STD: B156M
ORIG DATE: OCTOBER 1996	DIST 15	FED REG 6	FEDERAL AID PROJECT		SHEET 226
REVISIONS	COUNTY BEXAR		CONTROL	SECT	JOB / HIGHWAY 1604

DISCLAIMER:
The use of this standard is governed by the "Texas Engineering Practice Act". No warranty of any kind is made by TxDOT for any purpose whatsoever. TxDOT assumes no responsibility for the conversion of this standard to other formats or for incorrect results or damages resulting from its use.

(LY=1.3 for Metric)

ACC:

LEVELS DISPLAYED

DISCLAIMER:
The use of this standard is governed by the "Texas Engineering Practice Act". No warranty of any kind is made by TxDOT for any purpose whatsoever. TxDOT assumes no responsibility for the conversion of this standard to other formats or for incorrect results or damages resulting from its use.

TABLE OF DIMENSIONS

① CULVERT SIZE S	H	SLAB T	WALL U	WINGWALL Z	L	R	W	Y	X	APRON V NUMBER OF SPANS 1	2	3	4	5	6
1,500	1,500	175	175	1,975	4,090	225	1,300	400	600	1,915	3,649	5,383	7,118	8,852	10,586
1,800	1,500	175	175	1,975	4,090	225	1,300	400	600	2,226	4,271	6,315	8,360	10,405	12,449
2,100	1,500	175	175	1,975	4,090	225	1,300	400	600	2,536	4,892	7,247	9,602	11,957	14,313
2,400	1,500	175	175	1,975	4,090	225	1,300	400	600	2,847	5,513	8,179	10,845	13,510	16,176
2,700	1,500	175	175	1,975	4,090	225	1,300	400	600	3,158	6,134	9,110	12,087	15,063	18,040
3,000	1,500	175	175	1,975	4,090	225	1,300	400	600	3,468	6,755	10,042	13,329	16,616	19,903
1,500	1,500	200	175	2,000	4,140	225	1,300	400	600	1,915	3,649	5,383	7,118	8,852	10,586
1,800	1,500	200	175	2,000	4,140	225	1,300	400	600	2,226	4,271	6,315	8,360	10,405	12,449
2,100	1,500	200	175	2,000	4,140	225	1,300	400	600	2,536	4,892	7,247	9,602	11,957	14,313
2,400	1,500	200	175	2,000	4,140	225	1,300	400	600	2,847	5,513	8,179	10,845	13,510	16,176
2,700	1,500	200	175	2,000	4,140	225	1,300	400	600	3,158	6,134	9,110	12,087	15,063	18,040
3,000	1,500	200	175	2,000	4,140	225	1,300	400	600	3,468	6,755	10,042	13,329	16,616	19,903
1,800	1,500	225	200	2,025	4,190	225	1,300	400	600	2,278	4,348	6,419	8,489	10,560	12,630
2,100	1,500	225	200	2,025	4,190	225	1,300	400	600	2,588	4,969	7,350	9,732	12,113	14,494
2,400	1,500	225	200	2,025	4,190	225	1,300	400	600	2,899	5,590	8,282	10,974	13,666	16,357
2,700	1,500	225	200	2,025	4,190	225	1,300	400	600	3,209	6,212	9,214	12,216	15,219	18,221
3,000	1,500	225	200	2,025	4,190	225	1,300	400	600	3,520	6,833	10,146	13,459	16,771	20,084
2,100	1,500	250	200	2,050	4,240	250	1,300	400	600	2,588	4,969	7,350	9,732	12,113	14,494
2,400	1,500	250	200	2,050	4,240	250	1,300	400	600	2,899	5,590	8,282	10,974	13,666	16,357
2,700	1,500	250	200	2,050	4,240	250	1,300	400	600	3,209	6,212	9,214	12,216	15,219	18,221
3,000	1,500	250	200	2,050	4,240	250	1,300	400	600	3,520	6,833	10,146	13,459	16,771	20,084
2,400	1,500	275	225	2,075	4,300	275	1,300	400	600	2,951	5,668	8,386	11,103	13,821	16,539
2,700	1,500	275	225	2,075	4,300	275	1,300	400	600	3,261	6,289	9,317	12,346	15,374	18,402
3,000	1,500	275	225	2,075	4,300	275	1,300	400	600	3,572	6,910	10,249	13,588	16,927	20,266
2,700	1,500	300	250	2,100	4,350	300	1,300	400	600	3,313	6,367	9,421	12,475	15,529	18,583
3,000	1,500	300	250	2,100	4,350	300	1,300	400	600	3,623	6,988	10,353	13,717	17,082	20,447
2,700	1,500	325	275	2,125	4,400	325	1,300	400	600	3,365	6,445	9,525	12,604	15,684	18,764
3,000	1,500	325	275	2,125	4,400	325	1,300	400	600	3,675	7,066	10,456	13,847	17,237	20,628
3,000	1,500	350	300	2,150	4,450	350	1,300	400	600	3,727	7,143	10,560	13,976	17,393	20,809

REINFORCING STEEL ~ 2 CULVERT APRONS

BARS F #4 at 300 LGTH = V NO.	NUMBER OF SPANS 1 kg	2 kg	3 kg	4 kg	5 kg	6 kg	BARS A2 ~ #4 at 300 LGTH	NUMBER OF SPANS 1 NO.	kg	2 NO.	kg	3 NO.	kg	4 NO.	kg	5 NO.	kg	6 NO.	kg
6	11	22	32	42	53	63	1,650	14	23	26	43	36	59	48	79	60	98	72	118
6	13	25	38	50	62	74	1,650	16	26	30	49	44	72	56	92	70	115	84	138
6	15	29	43	57	71	85	1,650	18	30	34	56	50	82	66	108	80	131	96	157
6	17	33	49	65	81	96	1,650	20	33	38	62	56	92	74	121	92	151	108	177
6	19	37	54	72	90	108	1,650	22	36	42	69	62	102	82	134	102	167	122	200
6	21	40	60	79	99	119	1,650	24	39	46	75	68	112	90	148	112	184	134	220
6	11	22	32	42	53	63	1,650	14	23	26	43	36	59	48	79	60	98	72	118
6	13	25	38	50	62	74	1,650	16	26	30	49	44	72	56	92	70	115	84	138
6	15	29	43	57	71	85	1,650	18	30	34	56	50	82	66	108	80	131	96	157
6	17	33	49	65	81	96	1,650	20	33	38	62	56	92	74	121	92	151	108	177
6	19	37	54	72	90	108	1,650	22	36	42	69	62	102	82	134	102	167	122	200
6	21	40	60	79	99	119	1,650	24	39	46	75	68	112	90	148	112	184	134	220
6	14	26	38	51	63	75	1,650	16	26	30	49	44	72	58	95	72	118	86	141
6	15	30	44	58	72	86	1,650	18	30	34	56	50	82	66	108	82	134	98	161
6	17	33	49	65	82	98	1,650	20	33	38	62	56	92	74	121	92	151	110	180
6	19	37	55	73	91	109	1,650	22	36	42	69	62	102	82	134	102	167	122	200
6	21	41	61	80	100	120	1,650	24	39	46	75	68	112	90	148	112	184	134	220
6	15	30	44	58	72	86	1,680	18	30	34	57	50	83	66	110	82	137	98	164
6	17	33	49	65	82	98	1,680	20	33	38	63	56	94	74	124	92	154	110	184
6	19	37	55	73	91	109	1,680	22	37	42	70	62	104	82	137	102	170	122	204
6	21	41	61	80	100	120	1,680	24	40	46	77	68	114	90	150	112	187	134	224
6	18	34	50	66	82	99	1,700	20	34	38	64	56	95	76	128	94	159	112	189
6	19	38	56	74	92	110	1,700	22	37	42	71	64	108	84	142	104	176	124	210
6	21	41	61	81	101	121	1,700	24	41	48	81	70	118	92	155	114	193	136	230
6	20	38	56	74	93	111	1,730	24	41	44	76	64	110	84	144	104	179	124	213
6	22	42	62	82	102	122	1,730	26	45	48	83	70	120	92	158	114	196	138	237
6	20	38	57	75	94	112	1,750	24	42	44	77	64	111	86	150	106	184	126	219
6	22	42	62	83	103	123	1,750	26	45	48	83	70	122	94	164	116	202	138	240
6	22	43	63	83	104	124	1,780	26	46	48	85	72	127	94	166	116	205	140	248

TOTAL QUANTITIES ~ 4 WINGS AND 2 APRONS

NUMBER OF SPANS 1 CONC (m^3)	1 REINF (kg)	2 CONC (m^3)	2 REINF (kg)	3 CONC (m^3)	3 REINF (kg)	4 CONC (m^3)	4 REINF (kg)	5 CONC (m^3)	5 REINF (kg)	6 CONC (m^3)	6 REINF (kg)
17.2	1,288	17.9	1,319	18.6	1,345	19.3	1,375	20.0	1,405	20.7	1,435
17.3	1,293	18.2	1,328	19.0	1,364	19.8	1,396	20.6	1,431	21.4	1,466
17.5	1,299	18.4	1,339	19.3	1,379	20.3	1,419	21.2	1,456	22.2	1,496
17.6	1,304	18.6	1,349	19.7	1,395	20.8	1,440	21.8	1,486	22.9	1,527
17.7	1,309	18.9	1,360	21.0	1,410	21.3	1,460	22.5	1,511	23.7	1,562
17.8	1,314	19.1	1,369	20.5	1,426	21.8	1,481	23.1	1,537	24.4	1,593
17.6	1,288	18.3	1,319	19.0	1,345	19.7	1,375	20.4	1,405	21.1	1,435
17.7	1,293	18.5	1,328	19.4	1,364	20.2	1,396	21.0	1,431	21.9	1,466
17.8	1,299	18.8	1,339	19.7	1,379	20.7	1,419	21.7	1,456	22.6	1,496
17.9	1,304	19.0	1,349	20.1	1,395	21.2	1,440	22.3	1,486	23.4	1,527
18.1	1,309	19.3	1,360	20.5	1,410	21.7	1,460	22.9	1,511	24.2	1,562
18.2	1,314	19.5	1,369	20.9	1,426	22.2	1,481	23.6	1,537	24.9	1,593
18.1	1,294	18.9	1,329	19.8	1,364	20.7	1,400	21.5	1,435	22.4	1,470
18.2	1,299	19.2	1,340	20.2	1,380	21.2	1,420	22.2	1,460	23.2	1,501
18.3	1,304	19.4	1,349	20.6	1,395	21.7	1,440	22.8	1,488	24.0	1,532
18.4	1,309	19.7	1,360	21.0	1,411	22.2	1,461	23.5	1,512	24.7	1,563
18.6	1,314	20.0	1,370	21.4	1,427	22.7	1,482	24.1	1,538	25.5	1,594
19.1	1,299	20.2	1,341	21.2	1,381	22.3	1,422	23.3	1,463	24.4	1,504
19.3	1,304	20.4	1,350	21.6	1,397	22.8	1,443	24.0	1,490	25.2	1,536
19.4	1,310	20.7	1,361	22.0	1,413	23.4	1,464	24.7	1,515	26.0	1,567
19.5	1,315	21.0	1,372	22.4	1,429	23.9	1,484	25.4	1,541	26.8	1,598
20.3	1,306	21.5	1,352	22.8	1,399	24.0	1,448	25.3	1,495	26.5	1,542
20.4	1,310	21.8	1,363	23.2	1,418	24.6	1,470	26.0	1,522	27.4	1,574
20.6	1,316	22.1	1,376	23.6	1,433	25.2	1,490	26.7	1,548	28.2	1,605
21.4	1,315	22.9	1,368	24.4	1,420	25.8	1,472	27.3	1,526	28.8	1,578
21.6	1,321	23.2	1,379	24.8	1,436	26.4	1,494	28.0	1,552	29.7	1,613
22.5	1,316	24.0	1,369	25.5	1,422	27.1	1,479	28.6	1,532	30.2	1,585
22.6	1,321	24.3	1,379	26.0	1,438	27.7	1,501	29.4	1,559	31.1	1,617
23.7	1,322	25.4	1,382	27.2	1,444	29.0	1,503	30.8	1,563	32.5	1,626

TABLE OF REINFORCING STEEL FOR 4 WINGWALLS

WING SIZE H	L ②	BARS J NO.	SIZE	SPA	LGTH	MASS	BARS A1 NO.	SIZE	SPA	LGTH	MASS	BARS C1 #4 at 450 NO.	LGTH	MASS	BARS C2 #4 at 450 NO.	LGTH	MASS	BARS C3 #4 at 450 NO.	LGTH	MASS	BARS D1 #5 at 450 NO.	LGTH	MASS	BARS D2 #5 at 450 NO.	LGTH	MASS	BARS E #4 at 450 NO.	LGTH	MASS	BARS B #4 at 300 NO.	LGTH	MASS
600	2,280	36	#4	300	1,730	62	36	#4	300	1,480	53	8	2,160	17	8	2,240	18	8	2,160	17	8	2,000	25	8	2,000	25	24	1,250	30	28	2,730	76
900	3,000	48	#4	270	2,100	100	48	#4	270	1,600	76	12	2,880	34	12	2,960	35	8	2,880	23	12	2,000	37	12	2,000	37	32	1,600	51	28	3,480	97
1,200	3,680	92	#4	170	2,500	229	92	#4	170	1,800	165	16	3,560	57	16	3,640	58	8	3,560	28	16	2,000	50	16	2,000	50	36	1,925	69	32	4,190	133
1,500	4,450	92	#5	200	3,000	428	92	#5	200	2,050	293	16	4,330	69	16	4,410	70	8	4,330	34	16	2,000	50	16	2,000	50	44	2,300	101	32	5,000	159
1,800	5,070	124	#5	170	3,400	654	124	#5	170	2,230	429	20	4,950	98	20	5,030	100	12	4,950	59	20	2,000	62	20	2,000	62	52	2,600	134	36	5,640	202
2,100	5,690	176	#5	130	3,750	1,024	176	#5	130	2,380	650	24	5,570	133	24	5,650	135	12	5,570	66	24	2,000	74	24	2,000	74	56	2,900	161	40	6,280	250
2,400	6,320	160	#6	160	4,150	1,484	160	#6	160	2,530	905	24	6,200	148	24	6,280	150	12	6,200	74	24	2,000	74	24	2,000	74	60	3,200	191	40	6,930	276
2,700	6,940	216	#6	130	4,550	2,197	216	#6	130	2,700	1,303	28	6,820	190	28	6,900	192	12	6,820	81	28	2,000	87	28	2,000	87	68	3,500	237	44	7,570	331
3,000	7,560	256	#6	120	4,900	2,804	256	#6	120	2,830	1,619	32	7,440	237	32	7,520	239	12	7,440	89	32	2,000	99	32	2,000	99	72	3,800	272	44	8,210	359

① S, H, T and U dimensions must match corresponding dimensions for Single or Multiple Box Culverts

② Wingwall length "L" varies ~ maximum "L" value and corresponding reinforcing shown for each value of "H"

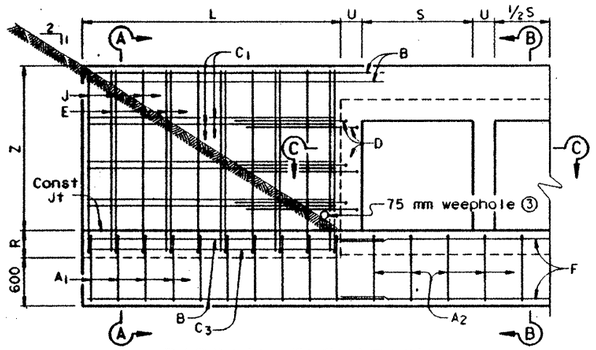

PARTIAL ELEVATION

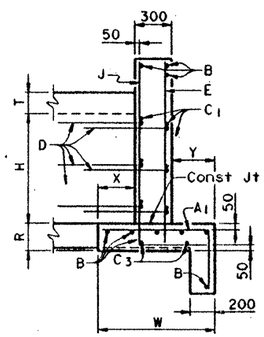

SECTION A-A

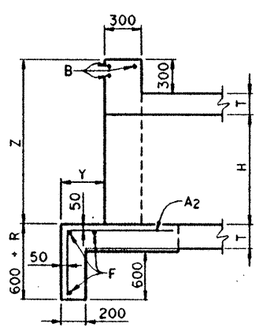

SECTION B-B

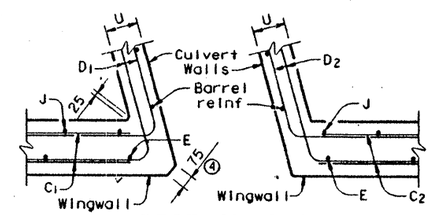

SECTION C-C

③ Fill around drains with coarse gravel

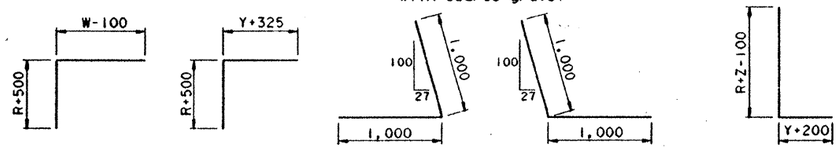

BARS A1 BARS A2 BARS D1 BARS D2 BARS J

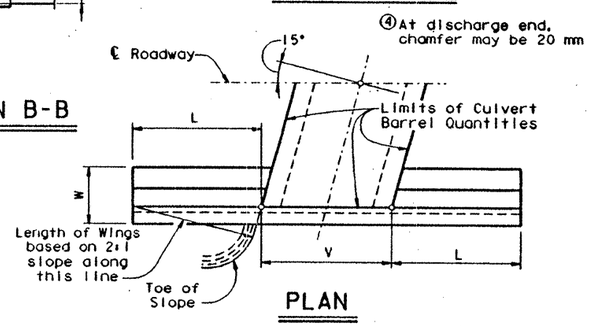

PLAN

GENERAL NOTES:

Designed according to AASHTO 1992 Standard and Interim Specifications.
All reinforcing steel shall be Grade 420 (fy = 420 MPa).
All concrete shall have a minimum 28 day compressive strength of 21 MPa.
Reinforcing bars shall be adjusted to provide a minimum of 35 mm clear cover.
Provide Weep Holes for H = 1,500 mm and greater.
The bottom slab of the barrel, wing footing and toewalls shall be placed in one continuous operation.
All dimensions are in millimeters and masses are in kilograms unless otherwise noted.

Texas Department of Transportation
Design Division (Bridge)

PARALLEL WINGS
FOR 15° SKEW BOX CULVERTS
(H = 1,500 mm)

PW-15-1.5(M)

FILE: pw1515st.dgn	DN: TER	CK: SDA	DW: MCB	CK: TER	STD: BI57M
ORIG DATE: OCTOBER 1996	DIST 15	FED REG 6	FEDERAL AID PROJECT		SHEET 227
REVISIONS	COUNTY BEXAR		CONTROL	SECT	JOB	HIGHWAY 1604

LEVELS DISPLAYED 1 3 ACC: (LV=1.3 for Metric)

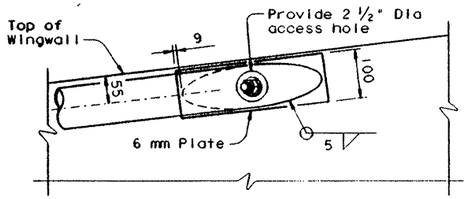

ELEVATION AT WING

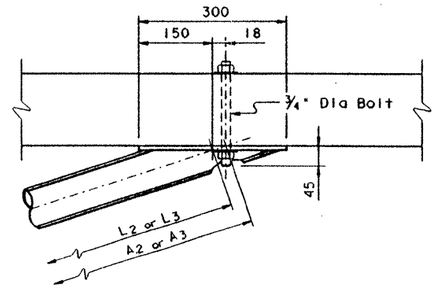

SECTION AT WING

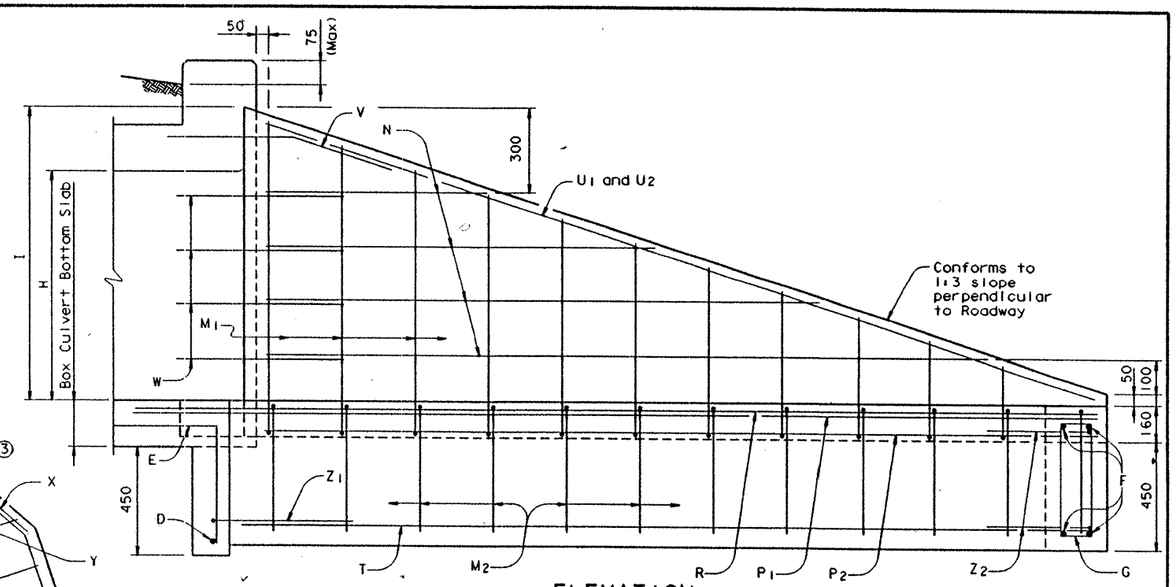

ELEVATION

(PERPENDICULAR TO WINGWALL)

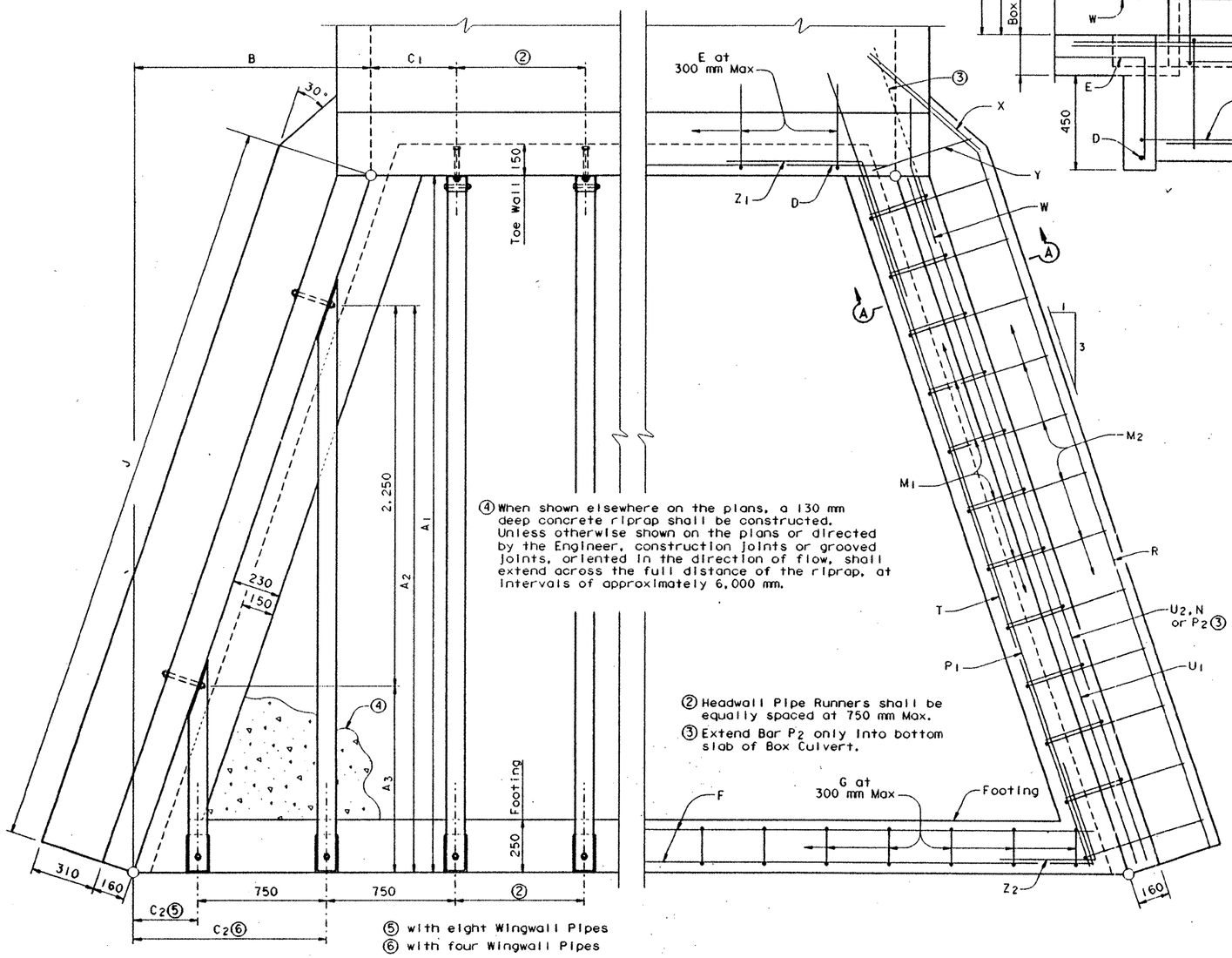

④ When shown elsewhere on the plans, a 130 mm deep concrete riprap shall be constructed. Unless otherwise shown on the plans or directed by the Engineer, construction joints or grooved joints, oriented in the direction of flow, shall extend across the full distance of the riprap, at intervals of approximately 6,000 mm.

② Headwall Pipe Runners shall be equally spaced at 750 mm Max.

③ Extend Bar P_2 only into bottom slab of Box Culvert.

SHOWING DIMENSIONS

PLAN

SHOWING REINFORCING

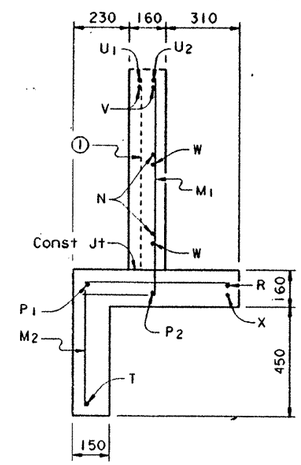

SECTION A-A

① Contractor shall provide bars as needed to support Bar U_1 on inside face of wingwall.

GENERAL NOTES:

All reinforcing steel shall be Grade 420 (fy = 420 MPa)

All concrete shall have a minimum 28 day compressive strength of 21 MPa.

All pipe runners shall be 80 mm in diameter and shall conform to ASTM A53. Pipe runners less than or equal to 3,600 mm in length shall be standard weight (Schedule 40). Pipe runners greater than 3,600 mm in length shall be extra strong (Schedule 80).

All bolts, nuts, washers, brackets, angles and pipe runners are considered parts of the Safety End Treatment for payment.

Bolts and nuts shall conform to ASTM A307.

Holes shall be 1/16" oversize unless otherwise noted.

Steel plate shall conform to ASTM A36.

Dimensions relating to reinforcing steel are to centers of bars.

All reinforcing bars shall be adjusted to provide a 35 mm clear cover.

Chamfer exposed corners 20 mm except as otherwise noted.

All exposed steel shall be galvanized unless otherwise shown on plans. Galvanizing damaged during transport and construction shall be repaired in accordance with the specifications.

All dimensions are in millimeters and masses are in kilograms unless otherwise noted.

SHEET 1 OF 2

Texas Department of Transportation
Design Division (Bridge)

SAFETY END TREATMENT
FOR 0° SKEW BOX CULVERTS WITH FLARED WINGS ~ TYPE I
1:3 EMBANKMENT SLOPE

SETB-0-3(M)

FILE: stb003st.dgn	DN: SDA	CK: EJU	DW: MCB	CK: EJU	STD: B221M	
ORIG DATE: OCTOBER 1996	DIST 15	FED REG 6	FEDERAL AID PROJECT			SHEET 228
REVISIONS	COUNTY BEXAR		CONTROL	SECT	JOB	HIGHWAY 1604

DISCLAIMER:
The use of this standard is governed by the "Texas Engineering Practice Act". No warranty of any kind is made by TxDOT for any purpose whatsoever. TxDOT assumes no responsibility for the conversion of this standard to other formats or for incorrect results or damages resulting from its use.

LEVELS DISPLAYED
ACC:
(LV=1.3 for Metric)

TABLE OF DIMENSIONS

Box Culvert Height, H	A_1	B	I	J
600	2,250	750	800	2,372
900	3,300	1,100	1,150	3,479
1,200	4,290	1,430	1,480	4,522
1,500	5,400	1,800	1,850	5,692

BILLS OF REINFORCING STEEL (For 4 Wing Walls)

Box Culvert Height, H	Bars M_1 ~ #4 at 300 mm max						Bars M_2 ~ #4 at 300 mm max			Bars N ~ #4 at 300 mm max					4-Bars P_1 ~ #5		4-Bars P_2 ~ #5		4-Bars R ~ #6					4-Bars T ~ #4		4-Bars U_1 ~ #6		4-Bars U_2 ~ #6		8-Bars V ~ #6		Bars W ~ #5			4-Bars X ~ #6		4-Bars Y ~ #6		4-Bars Z_1 ~ #4		8-Bars Z_2 ~ #4	
	No.	Avg Lgth mm	kg	Min "a"	Max "a"	Avg "a"	No.	Lgth mm	kg	No.	Min Lgth mm	Max Lgth mm	Avg Lgth mm	kg	Lgth mm	kg	Lgth mm	kg	Lgth mm	kg	"b"	"c"	Lgth mm	kg	Lgth mm	kg	Lgth mm	kg	Lgth mm	kg	Lgth mm	kg	No.	Lgth mm	kg	Lgth mm	kg	Lgth mm	kg	Lgth mm	kg	Lgth mm	kg
600	32	790	25	150	840	500	36	1,110	40	12	770	2,190	1,480	18	2,830	18	2,740	17	3,190	29	870	2,320	2,380	9	2,390	21	2,360	21	1,000	18	12	840	16	870	8	470	4	920	4	920	7
900	48	960	46	150	1,190	670	52	1,110	57	16	770	3,290	2,030	32	3,940	24	3,850	24	4,290	38	870	3,420	3,490	14	3,550	32	3,520	31	1,000	18	16	840	21	870	8	470	4	920	4	920	7
1,200	60	1,130	67	160	1,520	840	64	1,110	71	20	770	4,340	2,560	51	4,980	31	4,890	30	5,340	48	870	4,470	4,530	18	4,640	41	4,620	41	1,000	18	20	840	26	870	8	470	4	920	4	920	7
1,500	76	1,320	100	160	1,890	1,030	80	1,110	88	24	770	5,510	3,140	75	6,150	38	6,060	38	6,510	58	870	5,640	5,700	23	5,820	52	5,850	52	1,000	18	24	840	31	870	8	470	4	920	4	920	7

Box Culvert Height, H	Box Culvert Span, S	8-Bars F ~ #5 Lgth mm	kg	Bars G ~ #4 No.	Lgth mm	kg	Headwall No.	C_1	L_1	Wingwall No.	C_2	A_2	L_2	A_3	L_3	Conc (m^3)	Reinf (Kg)	Pipe (m)	2-Bars D ~ #4 Lgth mm	kg	Bars E ~ #4 No.	Lgth mm	kg	Conc (m^3)	Reinf (Kg)
		CULVERT SIZE		FOOTING			PIPE RUNNERS									TOTAL QUANTITIES			BOX CULVERT TOE-WALL QUANTITIES						
NUMBER OF SPANS: 1																									
600	900	1,960	24	16	1,500	24	2	450	2,345	4	450	1,350	1,405	~	~	2.9	302	10.31	480	1	4	900	4	0.1	5
	1,200	2,260	28	18	1,500	27	2	600	2,345	4	600	1,800	1,875	~	~	3.0	309	12.19	780	2	6	900	5	0.1	7
	1,500	2,560	32	20	1,500	30	4	375	2,345	4	375	1,125	1,165	~	~	3.1	316	14.04	1,080	2	8	900	7	0.2	9
900	900	2,660	33	20	1,500	30	4	75	3,450	4	425	1,275	1,325	~	~	4.6	424	19.10	480	1	4	900	4	0.1	5
	1,200	2,960	37	22	1,500	33	4	225	3,450	4	575	1,725	1,800	~	~	4.7	431	21.00	780	2	6	900	5	0.1	7
	1,500	3,260	40	24	1,500	36	4	375	3,450	4	725	2,175	2,275	~	~	4.8	437	22.90	1,080	2	8	900	7	0.2	9
	1,800	3,560	44	26	1,500	39	6	150	3,450	4	500	1,500	1,560	~	~	4.9	444	26.94	1,380	3	8	900	7	0.2	10
	2,100	3,860	48	28	1,500	42	6	300	3,450	4	650	1,950	2,035	~	~	5.0	451	28.84	1,680	3	10	900	9	0.3	12
1,200	1,200	3,620	45	26	1,500	39	2	600	4,495	8	530	3,840	4,030	1,590	4,030	6.5	549	41.23	780	2	6	900	5	0.1	7
	1,500	3,920	49	28	1,500	42	4	375	4,495	8	305	3,165	3,315	915	3,315	6.6	556	44.50	1,080	2	8	900	7	0.2	9
	1,800	4,220	52	30	1,500	45	4	525	4,495	8	455	3,615	3,790	1,365	3,790	6.7	563	48.30	1,380	3	8	900	7	0.2	10
	2,100	4,520	56	32	1,500	48	4	675	4,495	8	605	4,065	4,265	1,815	4,265	6.8	569	52.10	1,680	3	10	900	9	0.3	12
	2,400	4,820	60	34	1,500	51	6	450	4,495	8	380	3,390	3,555	1,140	3,555	6.9	576	55.41	1,980	4	12	900	11	0.3	15
1,500	1,500	4,660	58	34	1,500	51	4	375	5,665	8	675	4,275	4,485	2,025	4,485	8.9	705	58.54	1,080	2	8	900	7	0.2	9
	1,800	4,960	62	36	1,500	54	6	150	5,665	8	450	3,600	3,775	1,350	3,775	9.0	712	64.19	1,380	3	8	900	7	0.2	10
	2,100	5,260	65	38	1,500	57	6	300	5,665	8	600	4,050	4,250	1,800	4,250	9.1	718	67.99	1,680	3	10	900	9	0.3	12
	2,400	5,560	69	40	1,500	60	6	450	5,665	8	750	4,500	4,725	2,250	4,725	9.2	725	71.79	1,980	4	12	900	11	0.3	15
	2,700	5,860	73	42	1,500	63	8	225	5,665	8	525	3,825	4,010	1,575	4,010	9.3	732	77.40	2,280	5	12	900	11	0.3	15
	3,000	6,160	76	44	1,500	66	8	375	5,665	8	675	4,275	4,485	2,025	4,485	9.4	739	81.20	2,580	5	14	900	13	0.4	18
NUMBER OF SPANS: 2																									
600	1,500	4,230	53	30	1,500	45	8	463	2,345	4	463	1,389	1,445	~	~	3.6	351	24.54	2,760	5	16	900	14	0.4	20
900	1,500	4,930	61	36	1,500	54	10	88	3,450	4	438	1,314	1,365	~	~	5.3	476	39.96	2,760	5	16	900	14	0.4	20
	1,800	5,530	69	40	1,500	60	10	400	3,450	4	750	2,250	2,350	~	~	5.5	489	43.90	3,360	7	18	900	16	0.5	23
	2,100	6,130	76	44	1,500	66	12	325	3,450	4	675	2,025	2,115	~	~	5.7	503	49.86	3,960	8	20	900	18	0.6	26
1,200	1,500	5,590	69	40	1,500	60	8	463	4,495	8	393	3,429	3,595	1,179	3,595	7.1	595	64.72	2,760	5	16	900	14	0.4	20
	1,800	6,190	77	44	1,500	66	10	400	4,495	8	330	3,240	3,395	990	3,395	7.3	608	72.11	3,360	7	18	900	16	0.5	23
	2,100	6,790	84	48	1,500	72	12	325	4,495	8	255	3,015	3,160	765	3,160	7.5	621	79.22	3,960	8	20	900	18	0.6	26
	2,400	7,390	92	52	1,500	78	12	638	4,495	8	568	3,954	4,150	1,704	4,150	7.7	635	87.14	4,560	9	24	900	21	0.6	31
1,500	1,500	6,330	79	44	1,500	66	10	88	5,665	8	388	3,414	3,580	1,164	3,580	9.5	741	85.29	2,760	5	16	900	14	0.4	20
	1,800	6,930	86	48	1,500	72	10	400	5,665	8	700	4,350	4,565	2,100	4,565	9.6	754	93.17	3,360	7	18	900	16	0.5	23
	2,100	7,530	93	52	1,500	78	12	325	5,665	8	625	4,125	4,330	1,875	4,330	9.8	767	102.62	3,960	8	20	900	18	0.6	26
	2,400	8,130	101	56	1,500	83	14	263	5,665	8	563	3,939	4,130	1,689	4,130	10.0	781	112.35	4,560	9	24	900	21	0.6	31
	2,700	8,730	108	60	1,500	89	16	200	5,665	8	500	3,750	3,935	1,500	3,935	10.2	794	122.12	5,160	10	26	900	23	0.7	34
NUMBER OF SPANS: 3																									
600	1,500	5,910	73	42	1,500	63	12	550	2,345	4	550	1,650	1,720	~	~	4.1	390	35.02	4,430	9	22	900	20	0.6	28
900	1,500	6,610	82	46	1,500	69	14	175	3,450	4	525	1,575	1,640	~	~	5.8	512	54.86	4,430	9	22	900	20	0.6	28
	1,800	7,510	93	52	1,500	78	16	275	3,450	4	625	1,875	1,955	~	~	6.1	532	63.02	5,330	11	26	900	23	0.8	34
1,200	1,500	7,270	90	50	1,500	75	12	550	4,495	8	480	3,690	3,870	1,440	3,870	7.7	630	84.90	4,430	9	22	900	20	0.6	28
	1,800	8,170	101	56	1,500	83	14	650	4,495	8	580	3,990	4,185	1,740	4,185	7.9	651	96.41	5,330	11	26	900	23	0.8	34
1,500	1,500	8,010	99	56	1,500	83	14	175	5,665	8	475	3,675	3,855	1,425	3,855	10.0	779	110.15	4,430	9	22	900	20	0.6	28
	1,800	8,910	111	62	1,500	92	16	275	5,665	8	575	3,975	4,170	1,725	4,170	10.3	800	124.00	5,330	11	26	900	23	0.8	34

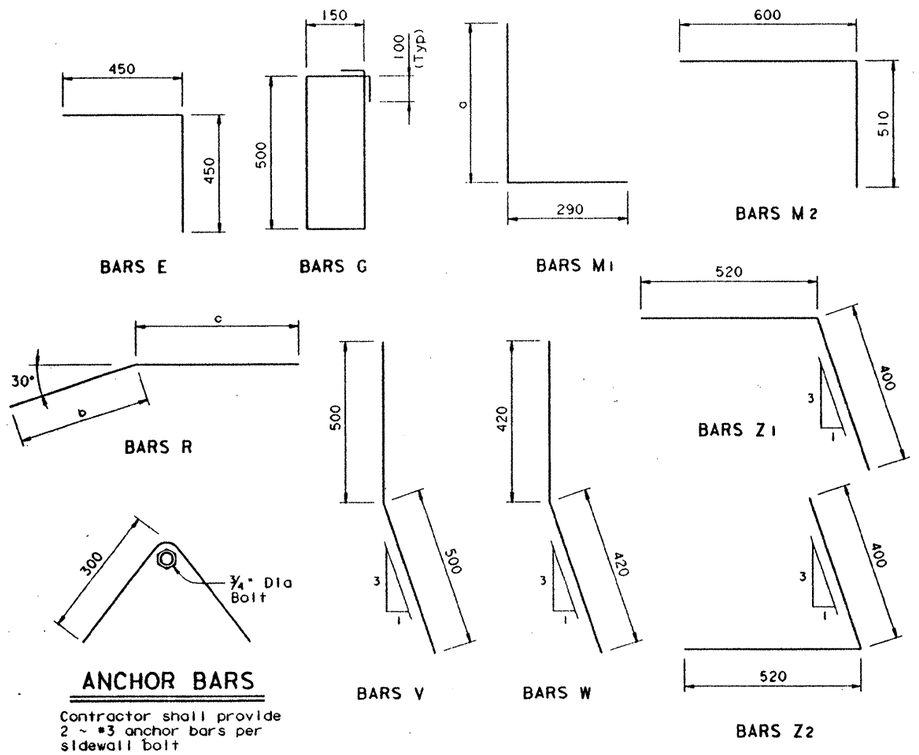

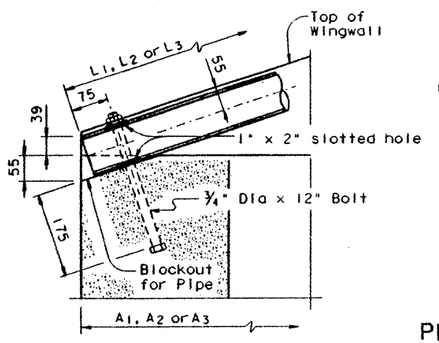

SECTION THRU FOOTING

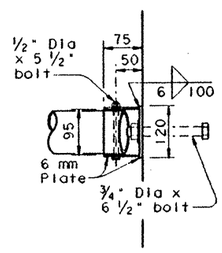

PLAN AT HEADWALL

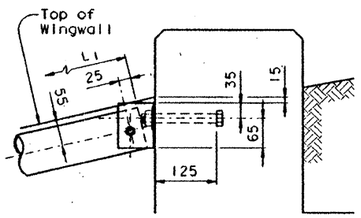

ELEVATION AT HEADWALL

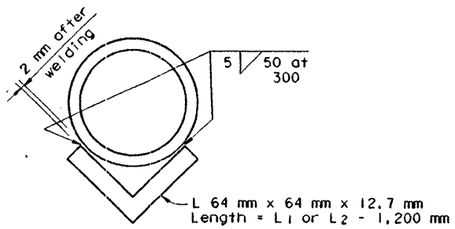

NOTE: Where L_1 or L_2 > 4,500 mm, the pipe runners shall be strengthened over the midspan as shown.

PIPE STRENGTHENING DETAIL

DISCLAIMER: The use of this standard is governed by the "Texas Engineering Practice Act". No warranty of any kind is made by TxDOT for any purpose whatsoever. TxDOT assumes no responsibility for the conversion of this standard to other formats or for incorrect results or damages resulting from its use.

LEVELS DISPLAYED | ACC: | (LV=1.3 for Metric)

SHEET 2 OF 2

Texas Department of Transportation
Design Division (Bridge)

SAFETY END TREATMENT
FOR 0° SKEW BOX CULVERTS WITH FLARED WINGS ~ TYPE I
1:3 EMBANKMENT SLOPE

SETB-0-3(M)

FILE: stb003st.dgn	DN: SDA	CK: EJU	DW: MCB	CK: EJU	STD: B221M
ORIG DATE: OCTOBER 1996	DIST 15	FED REG 6	FEDERAL AID PROJECT		SHEET 229
REVISIONS	COUNTY: BEXAR		CONTROL	SECT	JOB / HIGHWAY 1604

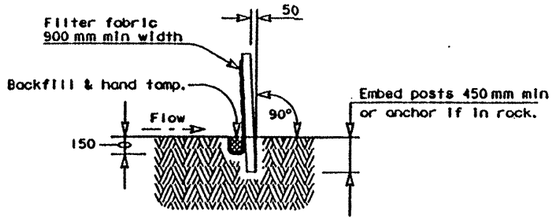

SECTION A-A

SEDIMENT CONTROL FENCE USAGE GUIDELINES

A sediment control fence may be constructed near the downstream perimeter of a disturbed area along a contour to intercept sediment from overland runoff. A 2 year storm frequency may be used to calculate the flow rate to be filtered.

Sediment control fence should be sized to filter a max. flow through rate of 0.07 $\frac{m^3/sec}{m^2}$. Sediment control fence is not recommended to control erosion from a drainage area larger than .8 ha.

GENERAL NOTES

1. The guidelines shown hereon are suggestions only and may be modified by the Engineer.

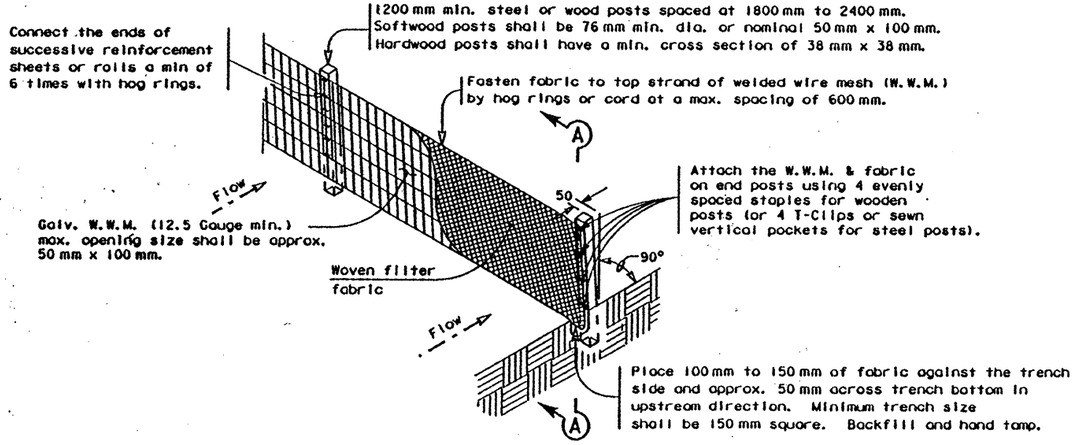

TEMPORARY SEDIMENT CONTROL FENCE

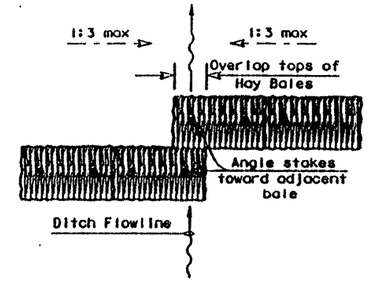

PLAN VIEW

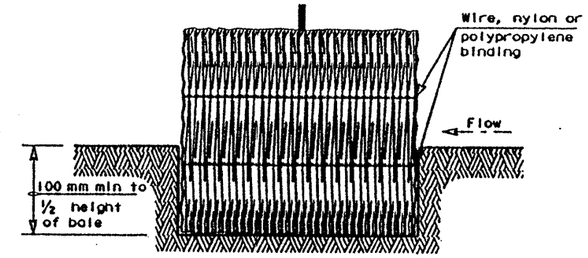

SECTION B-B

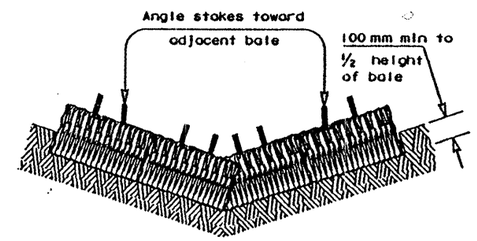

PROFILE VIEW

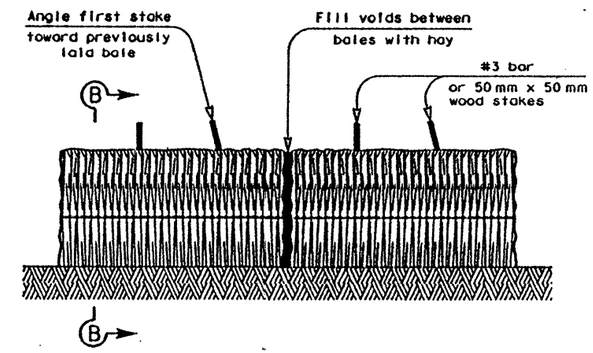

BALED HAY FOR EROSION CONTROL

BALED HAY USAGE GUIDELINES

A Baled Hay Installation may be constructed near the downstream perimeter of a disturbed area along a contour to intercept sediment from overland runoff. A two year storm frequency may be used to calculate the flow rate to be filtered. The installation should be sized to filter a maximum flow thru rate of 0.004 $\frac{m^3/sec}{m^2}$ of cross sectional area. Baled hay may be used at the following locations:

1. Where the runoff approaching the baled hay flows over disturbed soil for less than 30 meters. If the slope of the disturbed soil exceeds 10%, the length of slope upstream the baled hay should be less than 15 meters.
2. Where the installation will be required for less than 3 months.
3. Where the contributing drainage area is less than .2 ha.

For Baled Hay Installations in small ditches, the additional following considerations apply:

1. The ditch sideslopes should be graded as flat as possible to maximize the drainage flowrate thru the hay.
2. The ditch should be graded large enough to contain the overtopping drainage when sediment has filled to the top of the baled hay.

Bales should be replaced usually every 2 months or more often during wet weather when loss of structural integrity is accelerated.

GENERAL NOTES

1. Hay bales shall be a minimum of 750 mm in length and weigh a minimum of 22.5 kilograms.
2. Hay bales shall be bound by either wire or nylon or polypropylene string. The bales shall be composed entirely of vegetable matter.
3. Hay bales shall be embedded in the soil a minimum of 100 mm and where possible one-half the height of the bale.
4. Hay bales shall be placed in a row with ends tightly abutting the adjacent bales. The bales shall be placed with bindings parallel to the ground.
5. Hay bales shall be securely anchored in place with #3 bar or 50 mm x 50 mm wood stakes, driven through the bales. The first stake shall be angled towards the previously laid bale to force the bales together.
6. The guidelines shown hereon are suggestions only and may be modified by the Engineer.

R = Radius
D = Diameter

All unit-less dimensions are millimeters

Texas Department of Transportation
Design Division (Roadway)

TEMPORARY EROSION, SEDIMENT AND WATER POLLUTION CONTROL MEASURES

FENCE & BALED HAY

EC(1)-95(M)

FILE: EC195M.DGN	DN: HEJ	CK: HEJ	DW: BGD	CK:	NEG:
ORIG DATE: JUNE 1993	DIST	FED REG	PROJECT		SHEET
REVISIONS	15	6	CD 2452-1-35		230
	COUNTY		CONTROL	SECT	JOB	HIGHWAY
	BEXAR		2452	01	035	L1604

DISCLAIMER:
The Use of this standard is governed by the "Texas Engineering Practice Act". There no warranty of any kind is made by TxDOT for any purpose whatsoever. TxDOT assumes no responsibility for the conversion of this standard to other formats or for incorrect results or damages resulting from its use.

LEVELS DISPLAYED

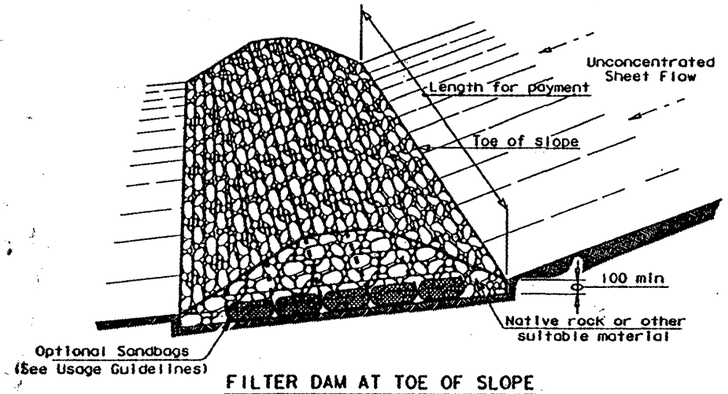

FILTER DAM AT TOE OF SLOPE

RFD1

TYPE 1

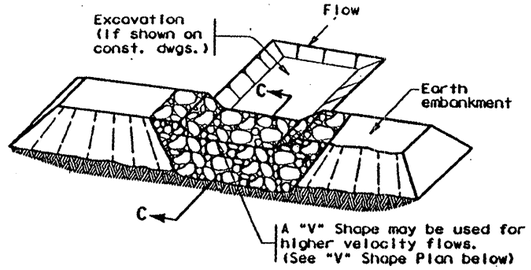

FILTER DAM AT SEDIMENT TRAP

RFD1 OR RFD2

TYPE 1 OR TYPE 2

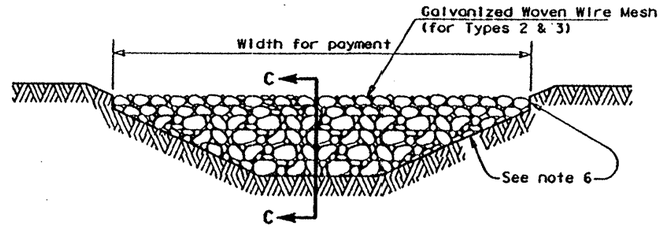

FILTER DAM AT CHANNEL SECTIONS

RFD1 OR RFD2 OR RFD3

TYPE 1 OR TYPE 2

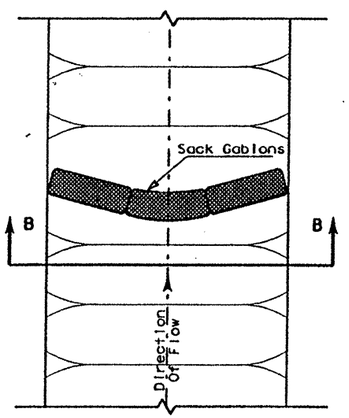

PLAN VIEW

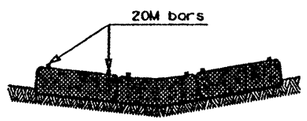

SECTION B-B

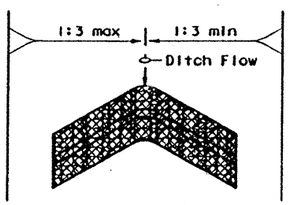

"V" SHAPE

(Plan View)

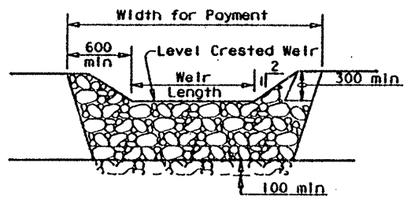

PROFILE

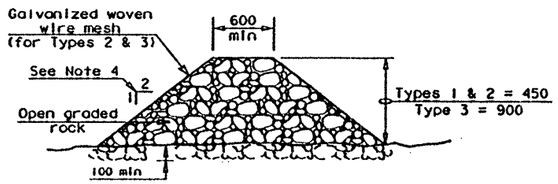

SECTION C-C

GENERAL NOTES

1. If shown on the plans or directed by the Engineer, filter dams should be placed near the toe of slopes where erosion is anticipated, upstream and/or downstream at drainage structures, and in roadway ditches and channels to collect sediment.
2. Materials (aggregate, wire mesh, sandbags, etc.) shall be as indicated by the specification for "Rock Filter Dams for Erosion and Sedimentation Control".
3. The rock filter dam dimensions shall be as indicated on the SW3P plans.
4. Side slopes should be 1:2 (vertical: horizontal) or flatter. Dams within the safety zone shall have sideslopes of 1:6 or flatter.
5. Maintain a minimum of 300 mm between top of rock filter dam weir and top of embankment for filter dams at sediment traps.
6. Filter dams should be embedded a minimum of 100 mm into existing ground.
7. The sediment trap for ponding of sediment laden runoff shall be of the dimensions shown on the plans.
8. Rock filter dam types 2 & 3 shall be secured with 20 gauge galvanized woven wire mesh with 25 mm diameter hexagonal openings. The aggregate shall be placed on the mesh to the height & slopes specified. The mesh shall be folded at the upstream side over the aggregate and tightly secured to itself on the downstream side using wire ties or hog rings. In stream use the mesh should be secured or staked to the stream bed prior to aggregate placement.
9. Sack Gabions should be staked down with #6 bars.
10. Flow outlet should be onto a stabilized area (vegetation, rock, etc.).
11. The guidelines shown hereon are suggestions only and may be modified by the Engineer.

PLANS SHEET LEGEND

RFD1 Type 1 Rock Filter Dam

RFD2 Type 2 Rock Filter Dam

RFD3 Type 3 Rock Filter Dam

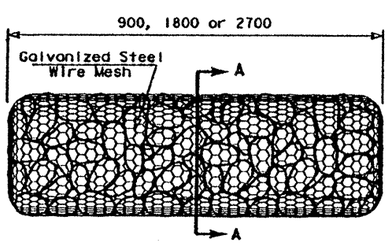

TYPE 4 (SACK GABIONS)

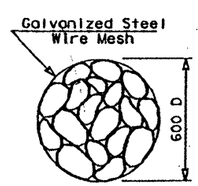

SECTION A-A

ROCK FILTER DAM USAGE GUIDELINES

Rock Filter Dams should be constructed downstream from disturbed areas to intercept sediment from overland runoff and/or concentrated flow. The dams should be sized to filter a maximum flow through rate of 0.04 $\frac{m^3/sec}{m^2}$ of cross sectional area. A 2 year storm frequency may be used to calculate the flow rate.

Type 1 (450 mm high with no wire mesh): Type 1 may be used at the toe of slopes, around inlets, in small ditches, and at dike or swale outlets. This type of dam is recommended to control erosion from a drainage area of 2 ha. or less. Type 1 may not be used in concentrated high velocity flows (approx. 2.4 m/sec or more) in which aggregate wash out may occur. Sandbags may be used at the embedded foundation (100 mm deep min.) for better filtering efficiency of low flows if called for on the plans or directed by the Engineer.

Type 2 (450 mm high with wire mesh): Type 2 may be used in ditches and at dike or swale outlets.

Type 3 (900 mm high with wire mesh): Type 3 may be used in stream flow and should be secured to the stream bed.

Type 4 (Sack gabions): Type 4 May be used in ditches and smaller channels to form an erosion control dam.

R = Radius

D = Diameter

All unit-less dimensions are millimeters

DISCLAIMER: The use of this standard is governed by the "Texas Engineering Practice Act". No warranty of any kind is made by TxDOT for any purpose whatsoever. TxDOT assumes no responsibility for the conversion of this standard to other formats or for incorrect results or damages resulting from its use.

LEVELS DISPLAYED

Texas Department of Transportation
Design Division (Roadway)

TEMPORARY EROSION, SEDIMENT AND WATER POLLUTION CONTROL MEASURES

ROCK FILTER DAMS

EC(2)-95(M)

FILE: EC295M.DGN	DN: HEJ	CK: HEJ	DW: BGD	CK:	NEG:	
ORIG DATE: JUNE 1993	DIST	FED REG	PROJECT #			SHEET
REVISIONS	15	6	CD 2452-1-35			231
	COUNTY		CONTROL	SECT	JOB	HIGHWAY
	BEXAR		2452	01	035	LP1&M

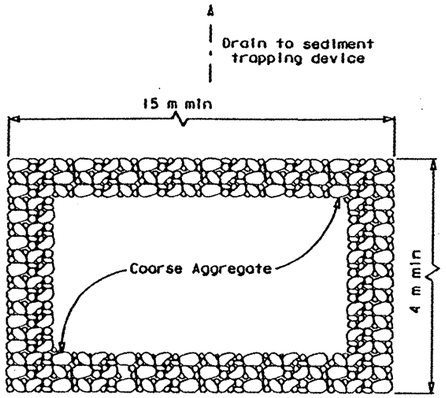

PLAN

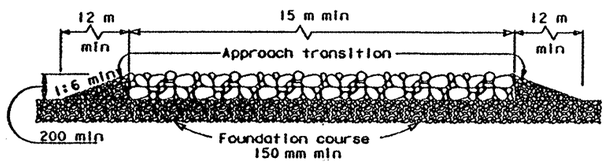

PROFILE

CONSTRUCTION EXIT (TYPE 1)

GENERAL NOTES

1. The length of the type 1 construction exit shall be as indicated on the plans, but not less than 15 meters.
2. The coarse aggregate should be open graded with a size of 50 mm to 200 mm.
3. The approach transitions should be no steeper than 1:6 (vertical : horizontal) and constructed as directed by the Engineer.
4. The construction exit foundation course shall be flexible base, bituminous concrete, Portland cement concrete or other material as approved by the Engineer.
5. The construction exit shall be graded to allow drainage to a sediment trapping device.
6. The guidelines shown hereon are suggestions only and may be modified by the Engineer.

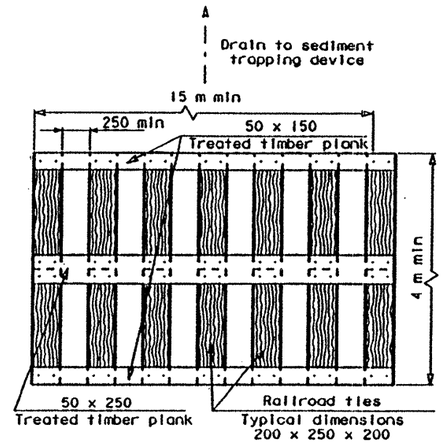

PLAN

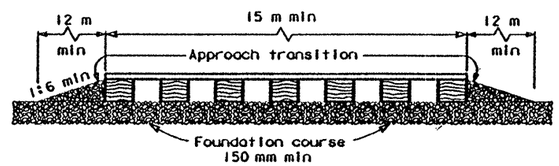

PROFILE

CONSTRUCTION EXIT (TYPE 2)

GENERAL NOTES

1. The length of the type 2 construction exit shall be as indicated on the plans, but not less than 15 meters.
2. The treated timber planks shall be attached to the railroad ties with 12.5 mm x 15 mm min. lag bolts. Other fasteners may be used as approved by the Engineer.
3. The treated timber planks shall be #2 grade min., and should be free from large and loose knots.
4. The approach transitions should be no steeper than 1:6 (vertical : horizontal) and constructed as directed by the Engineer.
5. The construction exit foundation course shall be flexible base, bituminous concrete, Portland cement concrete or other material as approved by the Engineer.
6. The construction exit should be graded to allow drainage to a sediment trapping device.
7. The guidelines shown hereon are suggestions only and may be modified by the Engineer.

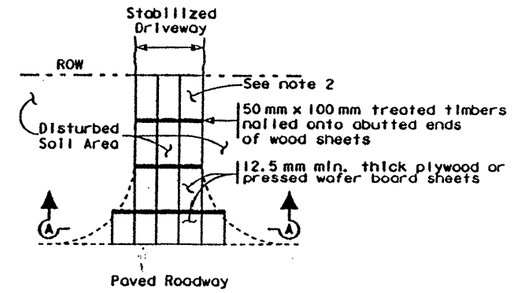

PLAN

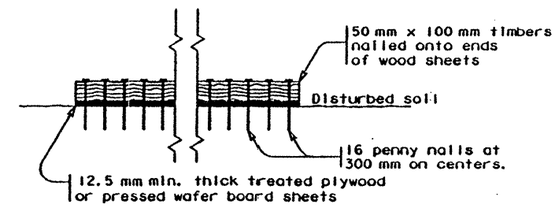

SECTION A-A

CONSTRUCTION EXIT (TYPE 3)

GENERAL NOTES

1. The length of the type 3 construction exit shall be as shown on the plans, or as directed by the Engineer.
2. The type 3 construction exit may be constructed from open graded crushed stone with a size of 50 to 100 millimeters spread a min. of 100 mm thick to the limits shown on the plans.
3. The treated timber planks shall be #2 grade min., and should be free from large and loose knots.
4. The guidelines shown hereon are suggestions only and may be modified by the Engineer.

R = Radius
D = Diameter

All unit-less dimensions are millimeters

Texas Department of Transportation
Design Division (Roadway)

TEMPORARY EROSION, SEDIMENT AND WATER POLLUTION CONTROL MEASURES

CONSTRUCTION EXITS

EC(3)-95(M)

FILE: EC395M.DGN	DN: HEJ	CK: HEJ	DW: BGD	CK:	HCG:	
ORIG DATE: JUNE 1993	DIST	FED REC	[redacted] PROJECT #			SHEET
REVISIONS	15	6	CD2452-1-35			232
	COUNTY		CONTROL	SECT	JOB	HIGHWAY
	BEXAR		2452	01	035	LHGQ

DISCLAIMER:
The use of this standard is governed by the "Texas Engineering Practice Act". No warranty of any kind is made by TxDOT for any purpose whatsoever. TxDOT assumes no responsibility for the conversion of this standard to other formats or for incorrect results or damages resulting from its use.

LEVELS DISPLAYED

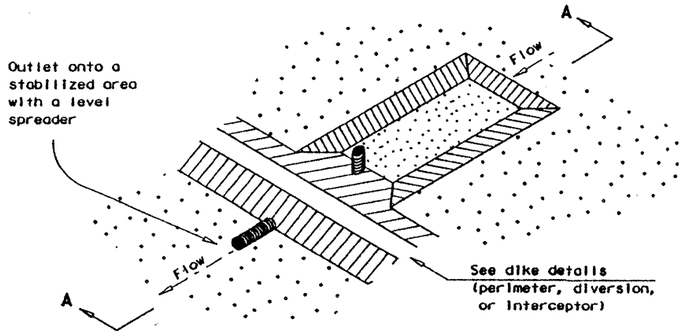

SEDIMENT BASIN AND/OR TRAP WITH PIPE OUTLET

(ST/PO)

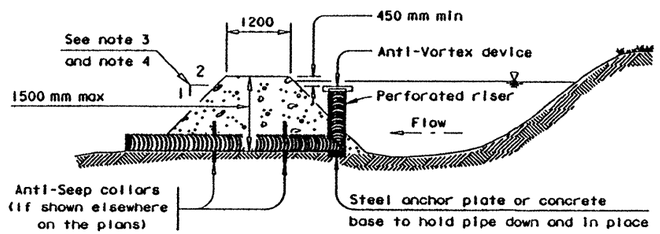

SECTION A-A

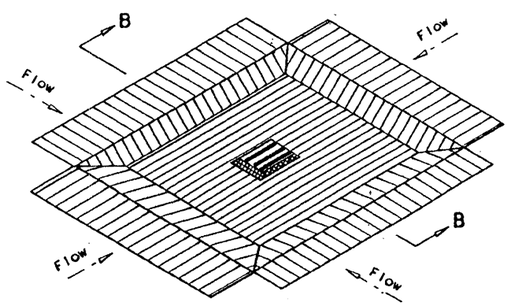

DROP INLET SEDIMENT TRAP

(ST-DI)

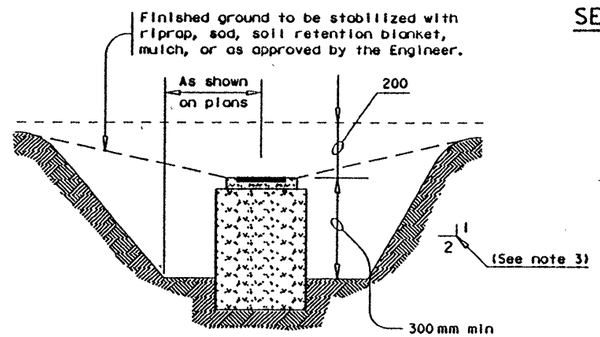

SECTION B-B

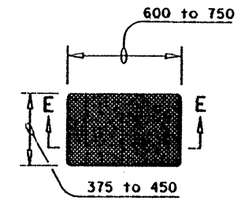

SANDBAG DETAIL

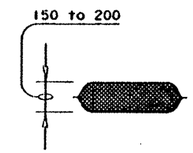

SECTION E-E

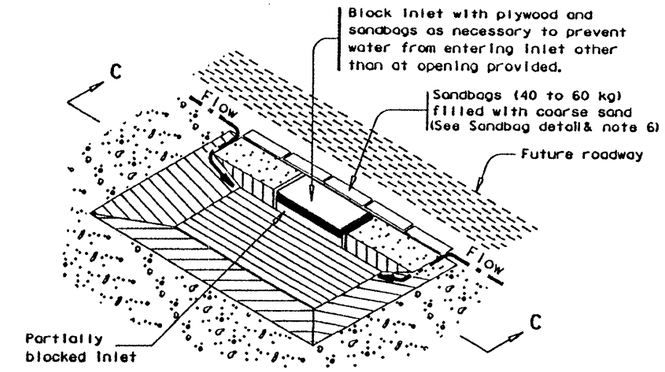

CURB INLET SEDIMENT TRAP

(ST-CI)

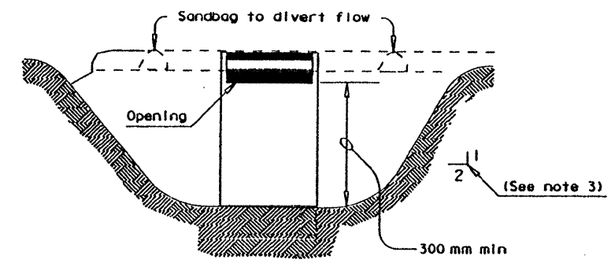

SECTION C-C

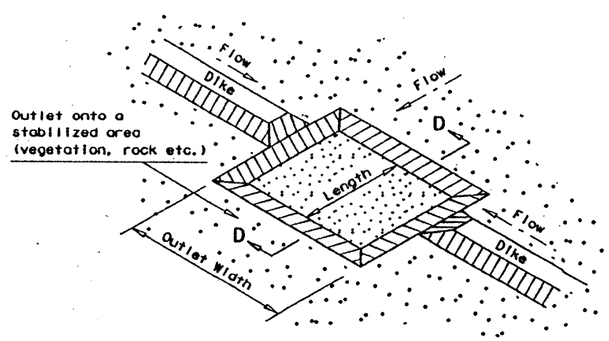

SEDIMENT TRAP WITH LEVEL STABILIZED OUTLET

(ST)

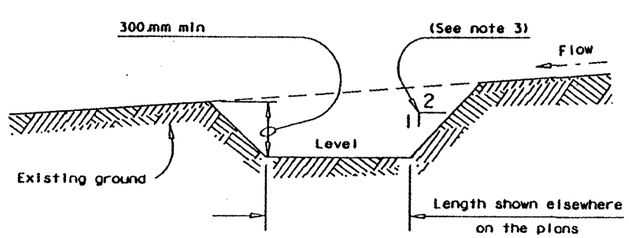

SECTION D-D

PLANS SHEET LEGEND

- (ST/PO) Sediment Basin and/or Trap with Pipe Outlet
- (ST-DI) Drop Inlet Sediment Trap
- (ST-CI) Curb Inlet Sediment Trap
- (ST) Sediment Trap with Level Stabilized Outlet

SEDIMENT BASIN & TRAP USAGE GUIDELINES

A sediment basin and/or trap may be used to precipitate sediment out of runoff draining from an unstabilized area.

Basins: The drainage area for a sediment basin should not exceed 40 ha. The basin capacity shall be at least 125 m^3/ha of drainage area (13mm over the drainage area). If the disturbed area draining to the basin is larger than 4 ha, the basin capacity should be 250 m^3/ha (25mm over the drainage area).

The basin should have a 40 hour draw-down time with an emergency spillway. The spillway may be designed to pass the peak rate of runoff from a 25 year frequency storm. The 100 year storm should be investigated to consider possible flooding impacts.

The entrance into the basin should be protected from erosion. The basin should be cleaned when the capacity has been reduced by one-third.

Traps: The drainage area for a sediment trap should not exceed 2 ha. The trap capacity should be 125 m^3/ha (13mm over the drainage area).

Sediment traps should be placed in the following locations:

1. Within drainage ditches spaced at 150 ± meters on center
2. Immediately preceding ditch inlets
3. Just before the drainage enters a water course
4. Just before the drainage leaves the right of way

The trap outlet may either be through a perforated riser and pipe assembly designed to achieve a 40 hour draw-down time or over a level stabilized area (vegetation, rock, etc.).

The trap should be cleaned when the capacity has been reduced by one-half or the sediment has accumulated to a depth of 300 mm, whichever is less.

GENERAL NOTES

1. Pipe outlet material shall conform to the item "Pipe Underdrains" or as accepted by the Engineer.
2. All pipe connections shall be watertight.
3. Side slopes within the safety clear zone of a roadway shall be 1:6 (vertical : horizontal) or flatter. Protect the traveling public from inlet stacks within the clear zone.
4. Sediment basins shall have side slopes of 1:3 (vertical: horizontal) or flatter.
5. The dimensions and limits of excavation for sediment basins and traps will be as shown elsewhere on the plans.
6. The sandbag material shall be made of polypropylene, polyethylene or polyamide woven fabric, min. unit weight 125 grams/m^2, Mullen burst strength exceeding 2000 kPa and ultraviolet stability exceeding 70%.
7. The guidelines shown hereon are suggestions only and may be modified by the Engineer.

R = Radius
D = Diameter
All unit-less dimensions are millimeters

Texas Department of Transportation
Design Division (Roadway)

TEMPORARY EROSION, SEDIMENT AND WATER POLLUTION CONTROL MEASURES

SEDIMENT BASINS AND TRAPS (EARTHWORK FOR EROSION CONTROL)

EC(6)-95(M)

FILE: EC695M.DGN	DN: HEJ	CK: HEJ	DW: BGD	CK:	NEG:	
ORIG DATE: MAY 1993	DIST	FED REG	[redacted] PROJECT #			SHEET
REVISIONS	15	6	CD 2452-1-35			233
	COUNTY		CONTROL	SECT	JOB	HIGHWAY
	BEXAR		2452	01	035	LP1604

DISCLAIMER: The use of this standard is governed by the "Texas Engineering Practice Act". No warranty of any kind is made by TxDOT for any purpose whatsoever. TxDOT assumes no responsibility for the conversion of this standard to other formats or for incorrect results or damages resulting from its use.

LEVELS DISPLAYED

BOX DATA

SECTION DIMENSIONS S	H	T_T	T_B	T_S	Fill Height (m)	M	REINFORCING ⑥ A_{S1} (mm²/m)	A_{S2} (mm²/m)	A_{S3} (mm²/m)	A_{S4} (mm²/m)	A_{S7} (mm²/m)	A_{S8} (mm²/m)	A_{S5} (mm²/m)	A_{S6} (mm²/m)	Lift Mass ⑤ (kg)	Governing ASTM Standard
1,200	600	190	150	125	< 0.6	-	440	780	420	280	380	300	380	380	3,888	C 850M
1,200	600	125	125	125	0.6	480	550	470	420	250	-	-	-	-	3,136	C 789M
1,200	600	125	125	125	0.9	460	320	280	280	250	-	-	-	-	3,136	C 789M
1,200	600	125	125	125	1.2	460	250	250	250	250	-	-	-	-	3,136	C 789M
1,200	600	125	125	125	1.5	460	250	250	250	250	-	-	-	-	3,136	C 789M
1,200	600	125	125	125	1.8	460	250	250	250	250	-	-	-	-	3,136	C 789M
1,200	600	125	125	125	2.4	460	250	250	250	250	-	-	-	-	3,136	C 789M
1,200	600	125	125	125	3.0	430	280	280	300	250	-	-	-	-	3,136	C 789M
1,200	600	125	125	125	3.7	430	320	320	320	250	-	-	-	-	3,136	C 789M
1,200	600	125	125	125	4.3	430	360	360	360	250	-	-	-	-	3,136	C 789M
1,200	600	125	125	125	4.9	430	400	400	400	250	-	-	-	-	3,136	C 789M
1,200	600	125	125	125	5.5	430	440	440	440	250	-	-	-	-	3,136	C 789M
1,200	900	190	150	125	< 0.6	-	380	870	490	280	380	300	420	380	4,321	C 850M
1,200	900	125	125	125	0.6	560	440	570	510	250	-	-	-	-	3,568	C 789M
1,200	900	125	125	125	0.9	480	280	340	340	250	-	-	-	-	3,568	C 789M
1,200	900	125	125	125	1.2	460	250	280	280	250	-	-	-	-	3,568	C 789M
1,200	900	125	125	125	1.5	460	250	250	280	250	-	-	-	-	3,568	C 789M
1,200	900	125	125	125	1.8	430	250	250	280	250	-	-	-	-	3,568	C 789M
1,200	900	125	125	125	2.4	430	250	300	300	250	-	-	-	-	3,568	C 789M
1,200	900	125	125	125	3.0	430	250	320	340	250	-	-	-	-	3,568	C 789M
1,200	900	125	125	125	3.7	430	250	360	380	250	-	-	-	-	3,568	C 789M
1,200	900	125	125	125	4.3	430	280	420	420	250	-	-	-	-	3,568	C 789M
1,200	900	125	125	125	4.9	430	320	470	470	250	-	-	-	-	3,568	C 789M
1,200	900	125	125	125	5.5	430	340	510	510	250	-	-	-	-	3,568	C 789M
1,200	1,200	190	150	125	< 0.6	-	340	910	510	280	380	300	440	380	4,753	C 850M
1,200	1,200	125	125	125	0.6	860	380	640	590	250	-	-	-	-	4,001	C 789M
1,200	1,200	125	125	125	0.9	610	250	380	380	250	-	-	-	-	4,001	C 789M
1,200	1,200	125	125	125	1.2	530	250	300	320	250	-	-	-	-	4,001	C 789M
1,200	1,200	125	125	125	1.5	510	250	280	300	250	-	-	-	-	4,001	C 789M
1,200	1,200	125	125	125	1.8	480	250	300	300	250	-	-	-	-	4,001	C 789M
1,200	1,200	125	125	125	2.4	460	250	320	320	250	-	-	-	-	4,001	C 789M
1,200	1,200	125	125	125	3.0	460	250	340	360	250	-	-	-	-	4,001	C 789M
1,200	1,200	125	125	125	3.7	460	250	400	400	250	-	-	-	-	4,001	C 789M
1,200	1,200	125	125	125	4.3	460	250	440	440	250	-	-	-	-	4,001	C 789M
1,200	1,200	125	125	125	4.9	460	250	490	510	250	-	-	-	-	4,001	C 789M
1,200	1,200	125	125	125	5.5	430	300	530	550	250	-	-	-	-	4,001	C 789M

Note: ASTM C850M design shall be used for direct traffic loading.

⑤ For Box Length = 2,400 mm

⑥ A_{S1} thru A_{S4}, A_{S7} and A_{S8} are minimum required areas of reinforcement per linear meter of box length. A_{S6} and A_{S5} are minimum required areas of reinforcement per linear meter of box width.

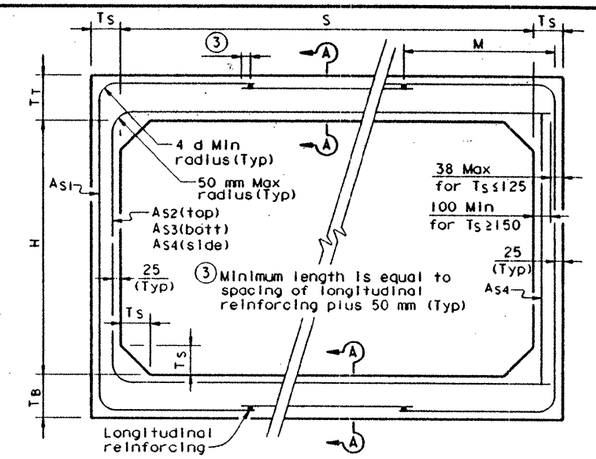

C789M CORNER OPTION "A"

C789M CORNER OPTION "B"

ASTM C789M STANDARD

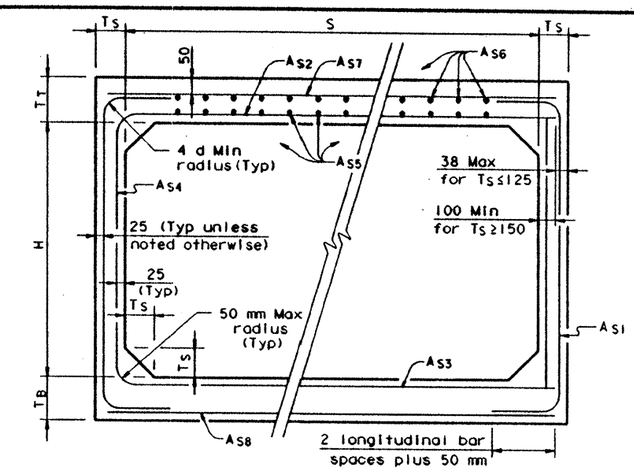

C850M CORNER OPTION "A"

C850M CORNER OPTION "B"

ASTM C850M STANDARD

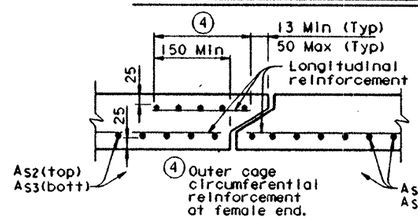

SECTION A-A

(TOP AND BOTTOM SLAB JOINT REINFORCEMENT)

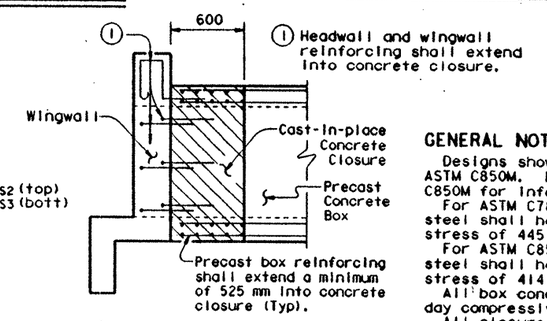

WINGWALL CONNECTION

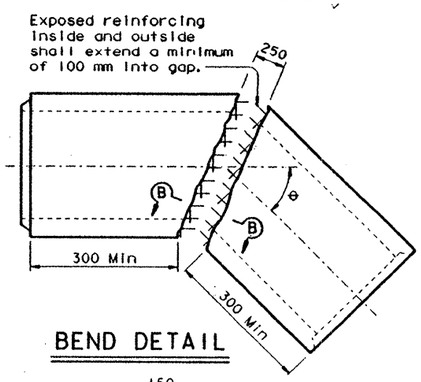

BEND DETAIL

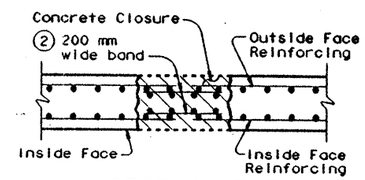

SECTION B-B

② Bands matching the inside and outside face reinforcing shall be placed in the gaps of the top and bottom slabs. A band matching the outside face reinforcing of the wall shall be placed in the gaps of the walls (placed in the outside face only). The bands shall be tack welded to the exposed reinforcing at each point of contact.

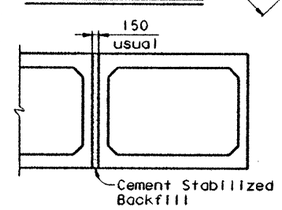

MULTIPLE UNIT PLACEMENT

GENERAL NOTES:

Designs shown conform to ASTM C789M or ASTM C850M. Refer to ASTM C789M or ASTM C850M for information or details not shown.

For ASTM C789M designs, all reinforcing steel shall have a minimum specified yield stress of 445 MPa.

For ASTM C850M designs, all reinforcing steel shall have a minimum specified yield stress of 414 MPa.

All box concrete shall have a minimum 28 day compressive strength of 35 MPa.

All closure concrete shall meet the specified 28 day compressive strength of the box and shall be placed according to item "Concrete Structures".

All closures shall be flush with the inside and outside faces.

Designed for MS18 (HS20) loading and fill heights shown.

In lieu of furnishing the designs shown on this sheet, the contractor may furnish an alternate design that is equal to or exceeds the box design for the design fill height in the table. Shop plans for alternate designs shall be submitted in accordance with item "Precast Concrete Structures".

All dimensions in millimeters unless otherwise shown.

Texas Department of Transportation
Design Division (Bridge)

SINGLE BOX CULVERTS PRECAST
1,200 mm SPAN

SCP-1.2(M)

FILE: scp12std.dgn	DN: KLR	CK: GAF	DW: TxDOT	CK: GAF	STD: B50M
ORIG DATE: JANUARY 1997	DIST 15	FED REG 6	FEDERAL AID PROJECT		SHEET 234
REVISIONS	COUNTY BEXAR		CONTROL	SECT	JOB / HIGHWAY 1604

DISCLAIMER:
The use of this standard is governed by the "Texas Engineering Practice Act". No warranty of any purpose is made by TxDOT for any specific application. TxDOT assumes no responsibility for the conversion of this standard to other formats or for incorrect results or damages resulting from its use.

LEVELS DISPLAYED 1 3 ACC: (LV=1.3 for Metric)

BOX DATA

SECTION DIMENSIONS S	H	T_T	T_B	T_S	Fill Height (m)	M (Min)	REINFORCING ⑥ A_{S1} (mm²/m)	A_{S2} (mm²/m)	A_{S3} (mm²/m)	A_{S4} (mm²/m)	A_{S7} (mm²/m)	A_{S8} (mm²/m)	A_{S5} (mm²/m)	A_{S6} (mm²/m)	⑤ Lift Mass (kg)	Governing ASTM Standard
1,500	900	200	175	150	< 0.6	-	470	870	470	300	400	360	400	400	5,709	C 850M
1,500	900	150	150	150	0.6	580	760	590	490	300	-	-	-	-	4,930	C 789M
1,500	900	150	150	150	0.9	530	360	380	380	300	-	-	-	-	4,930	C 789M
1,500	900	150	150	150	1.2	530	300	320	320	300	-	-	-	-	4,930	C 789M
1,500	900	150	150	150	1.5	510	300	300	320	300	-	-	-	-	4,930	C 789M
1,500	900	150	150	150	1.8	510	300	320	320	300	-	-	-	-	4,930	C 789M
1,500	900	150	150	150	2.4	510	300	340	340	300	-	-	-	-	4,930	C 789M
1,500	900	150	150	150	3.0	510	320	380	400	300	-	-	-	-	4,930	C 789M
1,500	900	150	150	150	3.7	510	360	420	440	300	-	-	-	-	4,930	C 789M
1,500	900	150	150	150	4.3	510	400	490	490	300	-	-	-	-	4,930	C 789M
1,500	900	150	150	150	4.9	480	440	550	550	300	-	-	-	-	4,930	C 789M
1,500	900	150	150	150	5.5	480	490	590	610	300	-	-	-	-	4,930	C 789M
1,500	1,200	200	175	150	< 0.6	-	400	930	510	300	400	360	440	400	6,228	C 850M
1,500	1,200	150	150	150	0.6	710	490	680	570	300	-	-	-	-	5,449	C 789M
1,500	1,200	150	150	150	0.9	580	320	420	440	300	-	-	-	-	5,449	C 789M
1,500	1,200	150	150	150	1.2	560	300	340	360	300	-	-	-	-	5,449	C 789M
1,500	1,200	150	150	150	1.5	560	300	340	360	300	-	-	-	-	5,449	C 789M
1,500	1,200	150	150	150	1.8	560	300	340	360	300	-	-	-	-	5,449	C 789M
1,500	1,200	150	150	150	2.4	510	300	360	380	300	-	-	-	-	5,449	C 789M
1,500	1,200	150	150	150	3.0	510	300	420	440	300	-	-	-	-	5,449	C 789M
1,500	1,200	150	150	150	3.7	510	300	470	490	300	-	-	-	-	5,449	C 789M
1,500	1,200	150	150	150	4.3	510	340	530	550	300	-	-	-	-	5,449	C 789M
1,500	1,200	150	150	150	4.9	480	380	590	610	300	-	-	-	-	5,449	C 789M
1,500	1,200	150	150	150	5.5	480	420	660	660	300	-	-	-	-	5,449	C 789M
1,500	1,500	200	175	150	< 0.6	-	340	970	550	300	400	360	470	400	6,747	C 850M
1,500	1,500	150	150	150	0.6	1,040	420	740	610	300	-	-	-	-	5,968	C 789M
1,500	1,500	150	150	150	0.9	740	300	470	490	300	-	-	-	-	5,968	C 789M
1,500	1,500	150	150	150	1.2	640	300	380	400	300	-	-	-	-	5,968	C 789M
1,500	1,500	150	150	150	1.5	610	300	360	380	300	-	-	-	-	5,968	C 789M
1,500	1,500	150	150	150	1.8	560	300	360	380	300	-	-	-	-	5,968	C 789M
1,500	1,500	150	150	150	2.4	560	300	380	400	300	-	-	-	-	5,968	C 789M
1,500	1,500	150	150	150	3.0	530	300	440	470	300	-	-	-	-	5,968	C 789M
1,500	1,500	150	150	150	3.7	530	300	490	510	300	-	-	-	-	5,968	C 789M
1,500	1,500	150	150	150	4.3	530	300	550	570	300	-	-	-	-	5,968	C 789M
1,500	1,500	150	150	150	4.9	530	340	610	640	300	-	-	-	-	5,968	C 789M
1,500	1,500	150	150	150	5.5	510	360	680	700	300	-	-	-	-	5,968	C 789M

Note: ASTM C850M design shall be used for direct traffic loading.

⑤ For Box Length = 2,400 mm

⑥ A_{S1} thru A_{S4}, A_{S7} and A_{S8} are minimum required areas of reinforcement per linear meter of box length. A_{S6} and A_{S5} are minimum required areas of reinforcement per linear meter of box width.

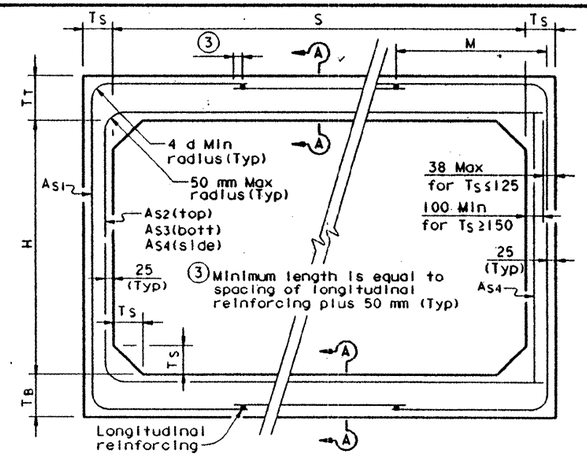

C789M CORNER OPTION "A"

C789M CORNER OPTION "B"

ASTM C789M STANDARD

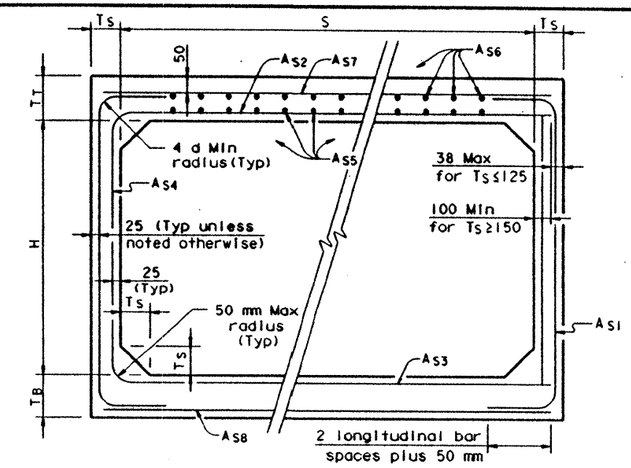

C850M CORNER OPTION "A"

C850M CORNER OPTION "B"

ASTM C850M STANDARD

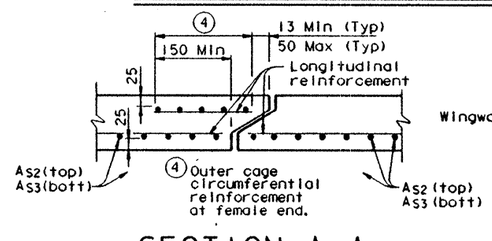

SECTION A-A

(TOP AND BOTTOM SLAB JOINT REINFORCEMENT)

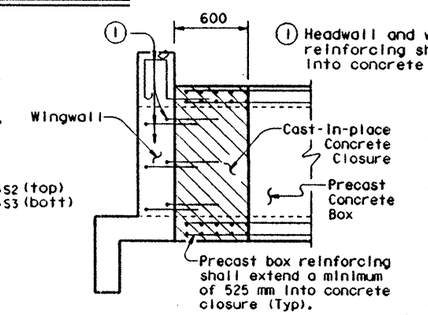

WINGWALL CONNECTION

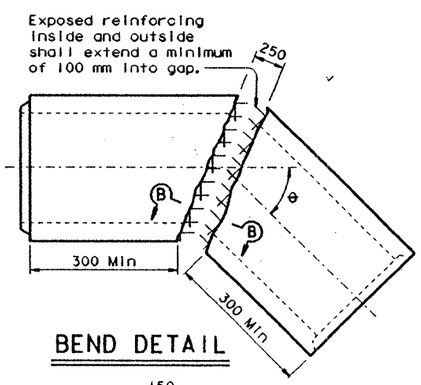

BEND DETAIL

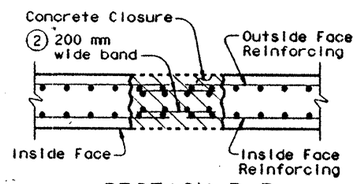

SECTION B-B

② Bands matching the inside and outside face reinforcing shall be placed in the gaps of the top and bottom slabs. A band matching the outside face reinforcing of the wall shall be placed in the gaps of the walls (placed in the outside face only). The bands shall be tack welded to the exposed reinforcing at each point of contact.

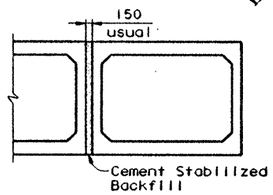

MULTIPLE UNIT PLACEMENT

GENERAL NOTES:

Designs shown conform to ASTM C789M or ASTM C850M. Refer to ASTM C789M or ASTM C850M for information or details not shown.

For ASTM C789M designs, all reinforcing steel shall have a minimum specified yield stress of 445 MPa.

For ASTM C850M designs, all reinforcing steel shall have a minimum specified yield stress of 414 MPa.

All box concrete shall have a minimum 28 day compressive strength of 35 MPa.

All closure concrete shall meet the specified 28 day compressive strength of the box and shall be placed according to item "Concrete Structures".

All closures shall be flush with the inside and outside faces.

Designed for MS18 (HS20) loading and fill heights shown.

In lieu of furnishing the designs shown on this sheet, the contractor may furnish an alternate design that is equal to or exceeds the box design for the design fill height in the table. Shop plans for alternate designs shall be submitted in accordance with item "Precast Concrete Structures".

All dimensions in millimeters unless otherwise shown.

DISCLAIMER:
The use of this standard is governed by the "Texas Engineering Practice Act". No warranty of any kind is made by TxDOT for any purpose whatsoever. TxDOT assumes no responsibility for the conversion of this standard to other formats or for incorrect results or damages resulting from its use.

ACC: (LV=1,3 for Metric)

LEVELS DISPLAYED: 1 3

Texas Department of Transportation
Design Division (Bridge)

SINGLE BOX CULVERTS PRECAST 1,500 mm SPAN

SCP-1.5(M)

FILE: scp15std.dgn	DN: KLR	CK: GAF	DW: TxDOT	CK: GAF	STD: B51M
ORIG DATE: JANUARY 1997	DIST: 15	FED REG: 6	FEDERAL AID PROJECT #		SHEET: 235
REVISIONS	COUNTY: BEXAR		CONTROL	SECT	JOB	HIGHWAY: 1604

BOX DATA

SECTION DIMENSIONS S	H	T_T	T_B	T_S	Fill Height (m)	M (Min)	REINFORCING ⑥ A_{S1} (mm²/m)	A_{S2} (mm²/m)	A_{S3} (mm²/m)	A_{S4} (mm²/m)	A_{S7} (mm²/m)	A_{S8} (mm²/m)	A_{S5} (mm²/m)	A_{S6} (mm²/m)	⑤ Lift Mass (kg)	Governing ASTM Standard
1,800	900	200	175	175	< 0.6	-	640	890	440	360	400	360	400	400	6,819	C 850M
1,800	900	175	175	175	0.6	740	640	610	470	360	-	-	-	-	6,509	C 789M
1,800	900	175	175	175	0.9	610	440	400	380	360	-	-	-	-	6,509	C 789M
1,800	900	175	175	175	1.2	610	380	360	360	360	-	-	-	-	6,509	C 789M
1,800	900	175	175	175	1.5	610	360	360	360	360	-	-	-	-	6,509	C 789M
1,800	900	175	175	175	1.8	580	360	360	360	360	-	-	-	-	6,509	C 789M
1,800	900	175	175	175	2.4	580	360	380	380	360	-	-	-	-	6,509	C 789M
1,800	900	175	175	175	3.0	580	420	420	440	360	-	-	-	-	6,509	C 789M
1,800	900	175	175	175	3.7	580	490	490	510	360	-	-	-	-	6,509	C 789M
1,800	900	175	175	175	4.3	580	550	550	550	360	-	-	-	-	6,509	C 789M
1,800	900	175	175	175	4.9	580	590	610	610	360	-	-	-	-	6,509	C 789M
1,800	900	175	175	175	5.5	580	660	680	680	360	-	-	-	-	6,509	C 789M
1,800	1,200	200	175	175	< 0.6	-	550	970	510	360	400	360	420	400	7,425	C 850M
1,800	1,200	175	175	175	0.6	710	550	700	550	360	-	-	-	-	7,115	C 789M
1,800	1,200	175	175	175	0.9	640	380	470	440	360	-	-	-	-	7,115	C 789M
1,800	1,200	175	175	175	1.2	610	360	400	400	360	-	-	-	-	7,115	C 789M
1,800	1,200	175	175	175	1.5	580	360	380	400	360	-	-	-	-	7,115	C 789M
1,800	1,200	175	175	175	1.8	580	360	380	400	360	-	-	-	-	7,115	C 789M
1,800	1,200	175	175	175	2.4	580	360	420	410	360	-	-	-	-	7,115	C 789M
1,800	1,200	175	175	175	3.0	560	380	490	510	360	-	-	-	-	7,115	C 789M
1,800	1,200	175	175	175	3.7	560	420	550	550	360	-	-	-	-	7,115	C 789M
1,800	1,200	175	175	175	4.3	560	470	610	640	360	-	-	-	-	7,115	C 789M
1,800	1,200	175	175	175	4.9	560	510	680	700	360	-	-	-	-	7,115	C 789M
1,800	1,200	175	175	175	5.5	560	570	740	760	360	-	-	-	-	7,115	C 789M
1,800	1,500	200	175	175	< 0.6	-	490	1,020	550	360	400	360	440	400	8,030	C 850M
1,800	1,500	175	175	175	0.6	840	510	760	610	360	-	-	-	-	7,720	C 789M
1,800	1,500	175	175	175	0.9	690	360	510	490	360	-	-	-	-	7,720	C 789M
1,800	1,500	175	175	175	1.2	640	360	420	440	360	-	-	-	-	7,720	C 789M
1,800	1,500	175	175	175	1.5	640	360	420	440	360	-	-	-	-	7,720	C 789M
1,800	1,500	175	175	175	1.8	640	360	420	440	360	-	-	-	-	7,720	C 789M
1,800	1,500	175	175	175	2.4	580	360	440	470	360	-	-	-	-	7,720	C 789M
1,800	1,500	175	175	175	3.0	580	360	510	530	360	-	-	-	-	7,720	C 789M
1,800	1,500	175	175	175	3.7	580	360	570	610	360	-	-	-	-	7,720	C 789M
1,800	1,500	175	175	175	4.3	580	400	660	680	360	-	-	-	-	7,720	C 789M
1,800	1,500	175	175	175	4.9	560	440	720	740	360	-	-	-	-	7,720	C 789M
1,800	1,500	175	175	175	5.5	560	490	780	830	360	-	-	-	-	7,720	C 789M
1,800	1,800	200	175	175	< 0.6	-	420	1,080	610	360	400	360	470	400	8,636	C 850M
1,800	1,800	175	175	175	0.6	1,200	470	830	660	360	-	-	-	-	8,326	C 789M
1,800	1,800	175	175	175	0.9	840	360	550	530	360	-	-	-	-	8,326	C 789M
1,800	1,800	175	175	175	1.2	740	360	470	490	360	-	-	-	-	8,326	C 789M
1,800	1,800	175	175	175	1.5	690	360	440	470	360	-	-	-	-	8,326	C 789M
1,800	1,800	175	175	175	1.8	660	360	440	470	360	-	-	-	-	8,326	C 789M
1,800	1,800	175	175	175	2.4	640	360	470	510	360	-	-	-	-	8,326	C 789M
1,800	1,800	175	175	175	3.0	610	360	530	570	360	-	-	-	-	8,326	C 789M
1,800	1,800	175	175	175	3.7	610	360	590	640	360	-	-	-	-	8,326	C 789M
1,800	1,800	175	175	175	4.3	610	360	680	700	360	-	-	-	-	8,326	C 789M
1,800	1,800	175	175	175	4.9	610	400	740	780	360	-	-	-	-	8,326	C 789M
1,800	1,800	175	175	175	5.5	580	440	800	850	360	-	-	-	-	8,326	C 789M

Note: ASTM C850M design shall be used for direct traffic loading.

⑤ For Box Length = 2,400 mm

⑥ A_{S1} thru A_{S4}, A_{S7} and A_{S8} are minimum required areas of reinforcement per linear meter of box length. A_{S6} and A_{S5} are minimum required areas of reinforcement per linear meter of box width.

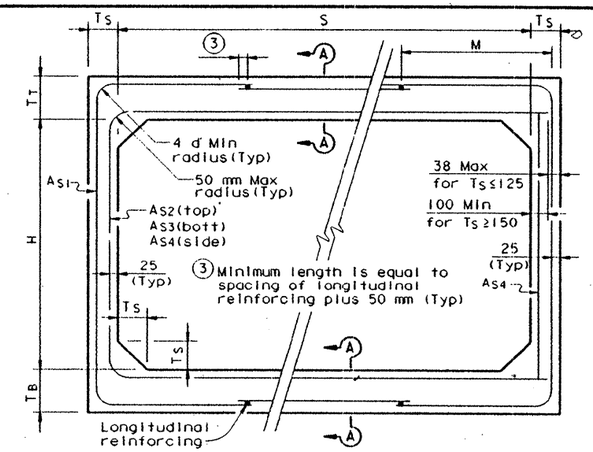

C789M CORNER OPTION "A"

C789M CORNER OPTION "B"

ASTM C789M STANDARD

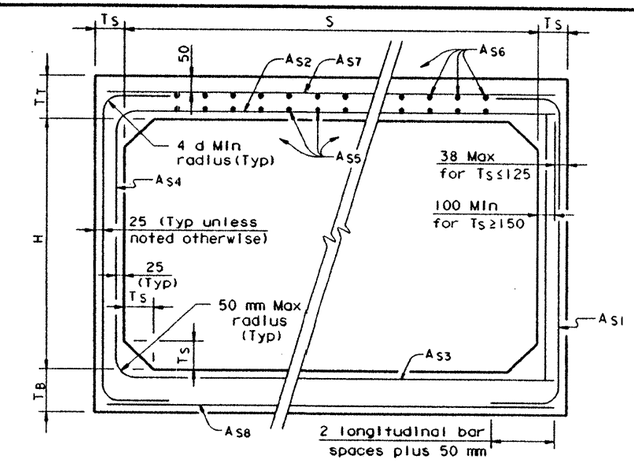

C850M CORNER OPTION "A"

C850M CORNER OPTION "B"

ASTM C850M STANDARD

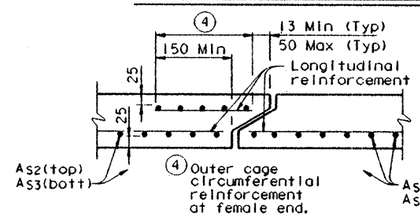

SECTION A-A

(TOP AND BOTTOM SLAB JOINT REINFORCEMENT)

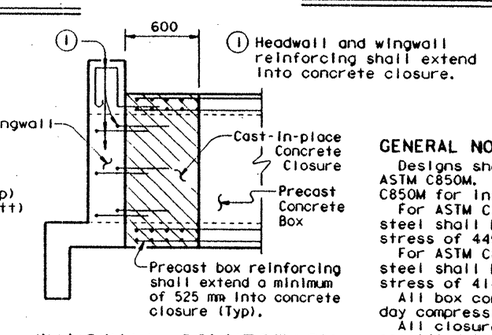

① Headwall and wingwall reinforcing shall extend into concrete closure.

WINGWALL CONNECTION

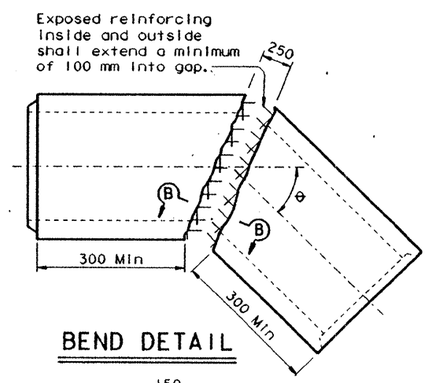

BEND DETAIL

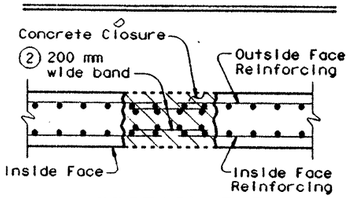

SECTION B-B

② Bands matching the inside and outside face reinforcing shall be placed in the gaps of the top and bottom slabs. A band matching the outside face reinforcing of the wall shall be placed in the gaps of the walls (placed in the outside face only). The bands shall be tack welded to the exposed reinforcing at each point of contact.

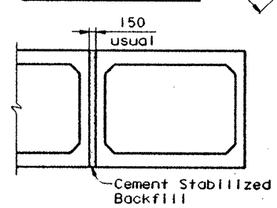

MULTIPLE UNIT PLACEMENT

GENERAL NOTES:

Designs shown conform to ASTM C789M or ASTM C850M. Refer to ASTM C789M or ASTM C850M for information or details not shown.

For ASTM C789M designs, all reinforcing steel shall have a minimum specified yield stress of 445 MPa.

For ASTM C850M designs, all reinforcing steel shall have a minimum specified yield stress of 414 MPa.

All box concrete shall have a minimum 28 day compressive strength of 35 MPa.

All closure concrete shall meet the specified 28 day compressive strength of the box and shall be placed according to item "Concrete Structures".

All closures shall be flush with the inside and outside faces.

Designed for MS18 (HS20) loading and fill heights shown.

In lieu of furnishing the designs shown on this sheet, the contractor may furnish an alternate design that is equal to or exceeds the box design for the design fill height in the table. Shop plans for alternate designs shall be submitted in accordance with item "Precast Concrete Structures".

All dimensions in millimeters unless otherwise shown.

Texas Department of Transportation
Design Division (Bridge)

SINGLE BOX CULVERTS PRECAST
1,800 mm SPAN

SCP-1.8(M)

FILE: scp18std.dgn	DN: KLR	CK: GAF	DW: TxDOT	CK: GAF	STD: B52M
ORIG DATE: JANUARY 1997	DIST 15	FED REG 6	FEDERAL AID PROJECT		SHEET 236
REVISIONS	COUNTY BEXAR		CONTROL	SECT	JOB	HIGHWAY 1604

DISCLAIMER:
The use of this standard is governed by the "Texas Engineering Practice Act". No warranty of any kind is made by TxDOT for any purpose whatsoever. TxDOT assumes no responsibility for the conversion of this standard to other formats or for incorrect results or damages resulting from its use.

LEVELS DISPLAYED 1 3 ACC: (LV=1.3 for Metric)

BOX DATA

SECTION DIMENSIONS S	H	T_T	T_B	T_S	Fill Height (m)	M (Min)	REINFORCING ⑥ A_{S1} (mm²/m)	A_{S2} (mm²/m)	A_{S3} (mm²/m)	A_{S4} (mm²/m)	A_{S7} (mm²/m)	A_{S8} (mm²/m)	A_{S5} (mm²/m)	A_{S6} (mm²/m)	⑤ Lift Mass (kg)	Governing ASTM Standard
2,100	1,200	200	200	200	< 0.6	-	680	950	510	400	400	400	400	400	8,996	C 850M
2,100	1,200	200	200	200	0.6	810	640	720	530	400	-	-	-	-	8,996	C 789M
2,100	1,200	200	200	200	0.9	690	440	490	440	400	-	-	-	-	8,996	C 789M
2,100	1,200	200	200	200	1.2	690	400	420	420	400	-	-	-	-	8,996	C 789M
2,100	1,200	200	200	200	1.5	660	400	420	440	400	-	-	-	-	8,996	C 789M
2,100	1,200	200	200	200	1.8	660	400	420	440	400	-	-	-	-	8,996	C 789M
2,100	1,200	200	200	200	2.4	660	420	470	490	400	-	-	-	-	8,996	C 789M
2,100	1,200	200	200	200	3.0	640	490	530	550	400	-	-	-	-	8,996	C 789M
2,100	1,200	200	200	200	3.7	640	530	610	610	400	-	-	-	-	8,996	C 789M
2,100	1,200	200	200	200	4.3	640	590	680	700	400	-	-	-	-	8,996	C 789M
2,100	1,200	200	200	200	4.9	640	660	760	760	400	-	-	-	-	8,996	C 789M
2,100	1,200	200	200	200	5.5	640	720	830	850	400	-	-	-	-	8,996	C 789M
2,100	1,500	200	200	200	< 0.6	-	610	1,020	570	400	420	400	400	400	9,688	C 850M
2,100	1,500	200	200	200	0.6	810	570	780	590	400	-	-	-	-	9,688	C 789M
2,100	1,500	200	200	200	0.9	710	400	550	490	400	-	-	-	-	9,688	C 789M
2,100	1,500	200	200	200	1.2	690	400	470	490	400	-	-	-	-	9,688	C 789M
2,100	1,500	200	200	200	1.5	690	400	470	490	400	-	-	-	-	9,688	C 789M
2,100	1,500	200	200	200	1.8	690	400	470	490	400	-	-	-	-	9,688	C 789M
2,100	1,500	200	200	200	2.4	660	400	510	530	400	-	-	-	-	9,688	C 789M
2,100	1,500	200	200	200	3.0	640	420	570	610	400	-	-	-	-	9,688	C 789M
2,100	1,500	200	200	200	3.7	640	470	660	680	400	-	-	-	-	9,688	C 789M
2,100	1,500	200	200	200	4.3	640	530	740	760	400	-	-	-	-	9,688	C 789M
2,100	1,500	200	200	200	4.9	640	570	800	850	400	-	-	-	-	9,688	C 789M
2,100	1,500	200	200	200	5.5	640	640	890	910	400	-	-	-	-	9,688	C 789M
2,100	1,800	200	200	200	< 0.6	-	570	1,080	610	400	420	400	420	400	10,380	C 850M
2,100	1,800	200	200	200	0.6	970	510	830	660	400	-	-	-	-	10,380	C 789M
2,100	1,800	200	200	200	0.9	790	400	570	550	400	-	-	-	-	10,380	C 789M
2,100	1,800	200	200	200	1.2	740	400	510	530	400	-	-	-	-	10,380	C 789M
2,100	1,800	200	200	200	1.5	710	400	490	530	400	-	-	-	-	10,380	C 789M
2,100	1,800	200	200	200	1.8	690	400	510	530	400	-	-	-	-	10,380	C 789M
2,100	1,800	200	200	200	2.4	660	400	550	570	400	-	-	-	-	10,380	C 789M
2,100	1,800	200	200	200	3.0	660	400	610	640	400	-	-	-	-	10,380	C 789M
2,100	1,800	200	200	200	3.7	660	420	700	720	400	-	-	-	-	10,380	C 789M
2,100	1,800	200	200	200	4.3	640	470	760	800	400	-	-	-	-	10,380	C 789M
2,100	1,800	200	200	200	4.9	640	530	850	890	400	-	-	-	-	10,380	C 789M
2,100	1,800	200	200	200	5.5	640	570	930	970	400	-	-	-	-	10,380	C 789M
2,100	2,100	200	200	200	< 0.6	-	530	1,120	680	400	490	400	440	400	11,072	C 850M
2,100	2,100	200	200	200	0.6	1,400	470	890	700	400	-	-	-	-	11,072	C 789M
2,100	2,100	200	200	200	0.9	970	400	610	570	400	-	-	-	-	11,072	C 789M
2,100	2,100	200	200	200	1.2	840	400	530	570	400	-	-	-	-	11,072	C 789M
2,100	2,100	200	200	200	1.5	840	400	530	570	400	-	-	-	-	11,072	C 789M
2,100	2,100	200	200	200	1.8	840	400	530	570	400	-	-	-	-	11,072	C 789M
2,100	2,100	200	200	200	2.4	710	400	570	610	400	-	-	-	-	11,072	C 789M
2,100	2,100	200	200	200	3.0	690	400	640	680	400	-	-	-	-	11,072	C 789M
2,100	2,100	200	200	200	3.7	690	400	720	760	400	-	-	-	-	11,072	C 789M
2,100	2,100	200	200	200	4.3	690	440	780	830	400	-	-	-	-	11,072	C 789M
2,100	2,100	200	200	200	4.9	690	490	870	910	400	-	-	-	-	11,072	C 789M

Note: ASTM C850M design shall be used for direct traffic loading.

⑤ For Box Length = 2,400 mm

⑥ A_{S1} thru A_{S4}, A_{S7} and A_{S8} are minimum required areas of reinforcement per linear meter of box length. A_{S6} and A_{S5} are minimum required areas of reinforcement per linear meter of box width.

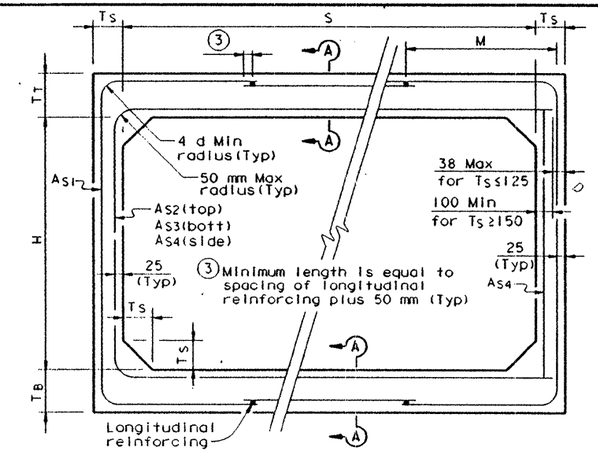

C789M CORNER OPTION "A"

C789M CORNER OPTION "B"

ASTM C789M STANDARD

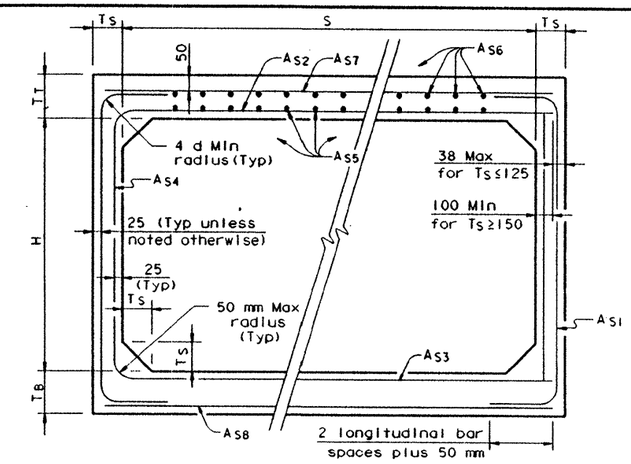

C850M CORNER OPTION "A"

C850M CORNER OPTION "B"

ASTM C850M STANDARD

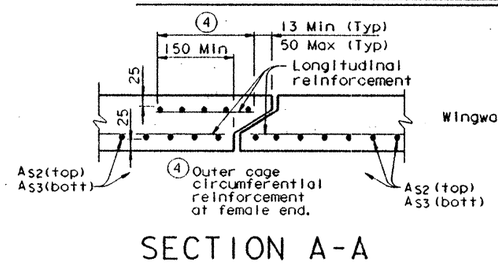

SECTION A-A

(TOP AND BOTTOM SLAB JOINT REINFORCEMENT)

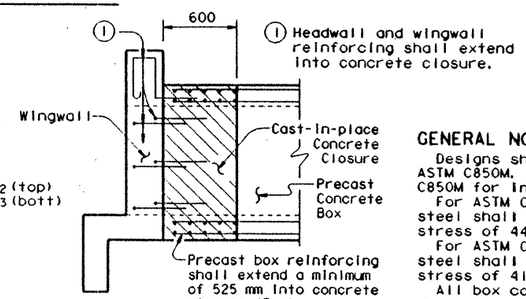

WINGWALL CONNECTION

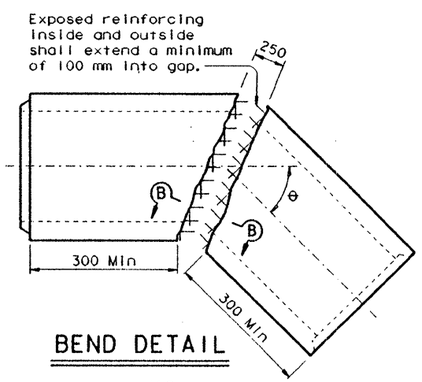

BEND DETAIL

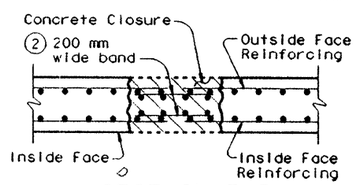

SECTION B-B

② Bands matching the inside and outside face reinforcing shall be placed in the gaps of the top and bottom slabs. A band matching the outside face reinforcing of the wall shall be placed in the gaps of the walls (placed in the outside face only). The bands shall be tack welded to the exposed reinforcing at each point of contact.

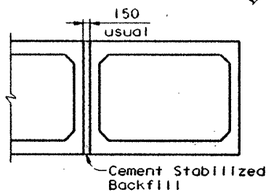

MULTIPLE UNIT PLACEMENT

GENERAL NOTES:

Designs shown conform to ASTM C789M or ASTM C850M. Refer to ASTM C789M or ASTM C850M for information or details not shown.

For ASTM C789M designs, all reinforcing steel shall have a minimum specified yield stress of 445 MPa.

For ASTM C850M designs, all reinforcing steel shall have a minimum specified yield stress of 414 MPa.

All box concrete shall have a minimum 28 day compressive strength of 35 MPa.

All closure concrete shall meet the specified 28 day compressive strength of the box and shall be placed according to item "Concrete Structures".

All closures shall be flush with the inside and outside faces.

Designed for MS18 (HS20) loading and fill heights shown.

In lieu of furnishing the designs shown on this sheet, the contractor may furnish an alternate design that is equal to or exceeds the box design for the design fill height in the table. Shop plans for alternate designs shall be submitted in accordance with item "Precast Concrete Structures".

All dimensions in millimeters unless otherwise shown.

Texas Department of Transportation
Design Division (Bridge)

SINGLE BOX CULVERTS PRECAST
2,100 mm SPAN

SCP-2.1 (M)

FILE: scp21std.dgn	DGN: KLR	CK: GAF	DWN: TxDOT	CK: GAF	STD: B53M
ORIG DATE: JANUARY 1997	DIST 15	FED REG 6	FEDERAL AID PROJECT		SHEET 237
REVISIONS	COUNTY BEXAR		CONTROL	SECT	JOB / HIGHWAY 1604

DISCLAIMER: The use of this standard is governed by the "Texas Engineering Practice Act". No warranty of any kind is made by TxDOT for any purpose whatsoever. TxDOT assumes no responsibility for the conversion of this standard to other formats or for incorrect results or damages resulting from its use.

ACC: (LV=1.3 for Metric)

LEVELS DISPLAYED: 1 3

DISCLAIMER:
The use of this standard is governed by the "Texas Engineering Practice Act". No warranty of any kind is made by TxDOT for any purpose whatsoever. TxDOT assumes no responsibility for the conversion of this standard to other formats or for incorrect results or damages resulting from its use.

SECTION DIMENSIONS				FILL HEIGHT, m ②	BILLS OF REINFORCING STEEL (For Box Length = 10 meters)																																QUANTITIES					
					Bars B					Bars C							Bars D							Bars E~#4 at 450 mm Max			Bars F1~#4				Bars F2~#4 at 450 mm Max			Bars H 4~#4		Bars K		Per Meter of Barrel		Curb		Total	
S	H	T	U		Number	Size	Spa	Lgth	Mass	Number	Size	Spa	Lgth	Mass	"X"	"Y"	Number	Size	Spa	Lgth	Mass	"Y"	"Z"	No.	Lgth	Mass	No.	Spa	Length	Mass	No.	Length	Mass	Lgth	Mass	No.	Mass	Conc (m^3)	Reinf (kg)	Conc (m^3)	Reinf (kg)	Conc (m^3)	Reinf (kg)
900	600	175	175	9.0	116	#4	175	1,150	133	82	#4	250	1,200	98	730	470	82	#4	250	1,160	95	470	690	46	600	27	3	325	9,900	30	19	9,900	187	1,170	5	10	13	0.65	57.0	0.2	18	6.7	588
900	900	175	175	9.0	134	#4	150	1,150	153	82	#4	250	1,500	122	1,030	470	82	#4	250	1,160	95	470	690	46	900	41	3	300	9,900	30	23	9,900	226	1,170	5	10	13	0.75	66.7	0.2	18	7.8	685
1,200	600	175	175	9.0	162	#4	125	1,450	233	134	#4	150	1,300	173	730	570	134	#4	150	1,260	168	570	690	46	600	27	5	250	9,900	49	21	9,900	207	1,470	6	12	15	0.75	85.7	0.3	21	7.8	878
1,200	900	175	175	9.0	134	#5	150	1,450	302	134	#4	150	1,600	213	1,030	570	134	#4	150	1,260	168	570	690	46	900	41	6	200	9,900	59	25	9,900	246	1,470	6	12	15	0.86	102.9	0.3	21	8.9	1,050
1,200	1,200	175	175	9.0	134	#5	150	1,450	302	134	#4	150	1,900	253	1,330	570	134	#4	150	1,260	168	570	690	46	1,200	55	6	200	9,900	59	25	9,900	246	1,470	6	12	15	0.96	108.3	0.3	21	9.9	1,104

② Minimum fill height shown shall be used for direct traffic loading.

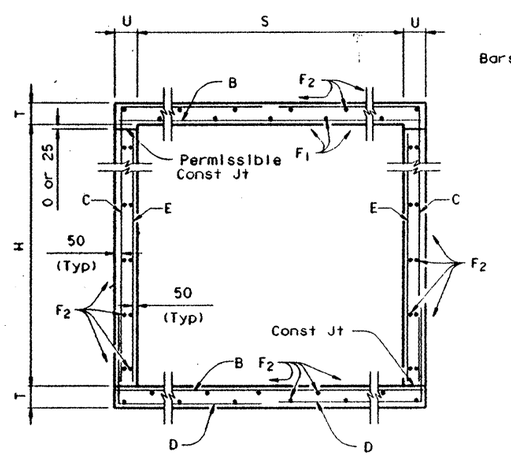

TYPICAL SECTION

For Direct Traffic, construct slab to conform to crown of roadway while maintaining constant thickness of slab.

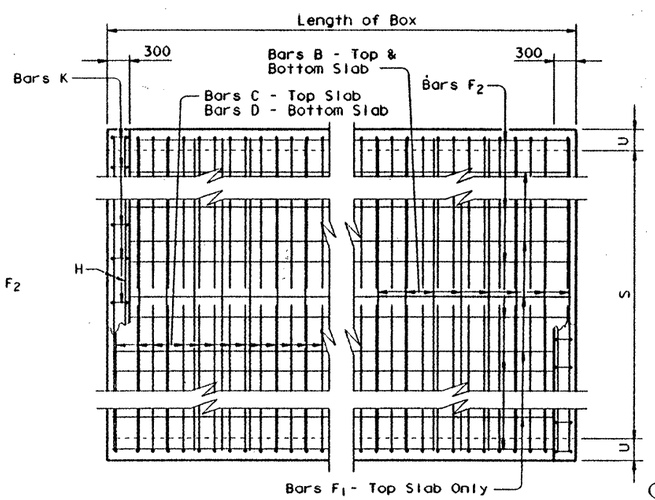

PLAN OF REINF STEEL

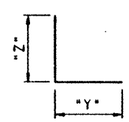

BARS D

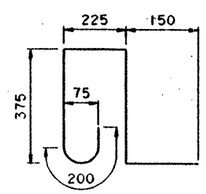

BARS K ~ #4
(Spa = 300 mm Max)
(Length = 1290 mm)

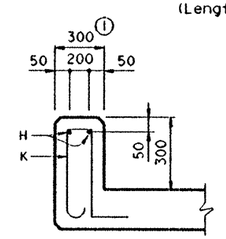

① For T6 Rail ~ see T6-CM(M) for additional details

SECTION THRU CURB

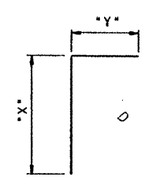

BARS C

GENERAL NOTES:

Designed according to current AASHTO Standard Specifications.
Designed for MS18 Loading and to the maximum fill height shown.
All reinforcing steel shall be Grade 420 (fy = 420 MPa).
All concrete shall have a minimum 28 day compressive strength of 25 MPa.
The bottom edge of the top slab shall be chamfered 75 mm at the entrance. Reinforcing bars shall be adjusted to provide a minimum of 35 mm clear cover. Headwall heights will be reduced, if necessary, to provide a maximum 75 mm projection above the roadway slope. No increase or decrease will be made in plan quantities of concrete or reinforcing steel for this work.
Construction joints shown at the flow line may be raised a maximum of 150 mm at the Contractor's option. If this option is used, bars E may be cut off or raised, and bars C and D may be reversed.
All dimensions are in millimeters and all mass is in kilograms unless otherwise noted.

Texas Department of Transportation
Design Division (Bridge)

SINGLE BOX CULVERTS CAST-IN-PLACE DIRECT TRAFFIC TO 9 m MAX FILL

SCC-.9 & 1.2(M)

FILE: scc12std.dgn	DN: GAF	CK: TEB	DW: TxDOT	CK: GAF	STD: B40M
ORIG DATE: JANUARY 1997	DIST	FED REG	FEDERAL AID PROJECT		SHEET
REVISIONS	15	6	CD2452-238		
	COUNTY		CONTROL	SECT	JOB	HIGHWAY
	BEXAR					1604

LEVELS DISPLAYED: 1 13
ACC:
(LV=1.3 for Metric)

BILLS OF REINFORCING STEEL (For Box Length = 10 meters)

SECTION DIMENSIONS S	H	T	U	FILL HEIGHT. m ②	Bars B Number	Size	Spa	Lgth	Mass	Bars C Number	Size	Spa	Lgth	Mass	"X"	"Y"	Bars D Number	Size	Spa	Lgth	Mass	"Y"	"Z"	Bars E~#4 at 450 mm Max No.	Lgth	Mass	Bars F1~#4 No.	Spa	Length	Mass	Bars F2~#4 at 450 mm Max No.	Length	Mass	Bars H 4~#4 Lgth	Mass	Bars K No.	Mass	QUANTITIES Per Meter of Barrel Conc (m³)	Reinf (kg)	Curb Conc (m³)	Reinf (kg)	Total Conc (m³)	Reinf (kg)
1,500	600	175	175	8.0	162	#5	125	1,750	440	134	#5	150	1,550	322	730	820	134	#5	150	1,650	343	820	830	46	600	27	8	175	9,900	79	22	9,900	216	1,770	7	14	18	0.86	142.7	0.3	25	8.9	1,452
1,500	600	200	175	9.0	162	#5	125	1,750	440	162	#4	125	1,470	237	750	720	162	#4	125	1,430	230	720	710	46	600	27	4	450	9,900	39	22	9,900	216	1,770	7	14	18	0.95	118.9	0.3	25	9.8	1,214
1,500	900	175	175	8.0	162	#5	125	1,750	440	162	#4	125	1,750	282	1,030	720	162	#4	125	1,410	227	720	690	46	900	41	8	175	9,900	79	26	9,900	256	1,770	7	14	18	0.96	132.5	0.3	25	10.0	1,350
1,500	900	200	175	9.0	162	#5	125	1,750	440	162	#4	125	1,770	285	1,050	720	162	#4	125	1,430	230	720	710	46	900	41	4	450	9,900	39	26	9,900	256	1,770	7	14	18	1.06	129.1	0.3	25	10.9	1,316
1,500	1,200	175	175	8.0	162	#5	125	1,750	440	162	#4	125	2,050	330	1,330	720	162	#4	125	1,410	227	720	690	46	1,200	55	8	175	9,900	79	26	9,900	256	1,770	7	14	18	1.07	138.7	0.3	25	11.0	1,412
1,500	1,200	200	175	9.0	162	#5	125	1,750	440	162	#4	125	2,070	333	1,350	720	162	#4	125	1,430	230	720	710	46	1,200	55	4	450	9,900	39	26	9,900	256	1,770	7	14	18	1.16	135.3	0.3	25	11.9	1,378
1,500	1,500	175	175	8.0	162	#5	125	1,750	440	162	#4	125	2,350	378	1,630	720	162	#4	125	1,410	227	720	690	46	1,500	69	8	175	9,900	79	30	9,900	295	1,770	7	14	18	1.17	148.8	0.3	25	12.1	1,513
1,500	1,500	200	175	9.0	162	#5	125	1,750	440	162	#4	125	2,370	382	1,650	720	162	#4	125	1,430	230	720	710	46	1,500	69	4	450	9,900	39	30	9,900	295	1,770	7	14	18	1.27	145.5	0.3	25	13.0	1,480

② Minimum fill height shown shall be used for direct traffic loading.

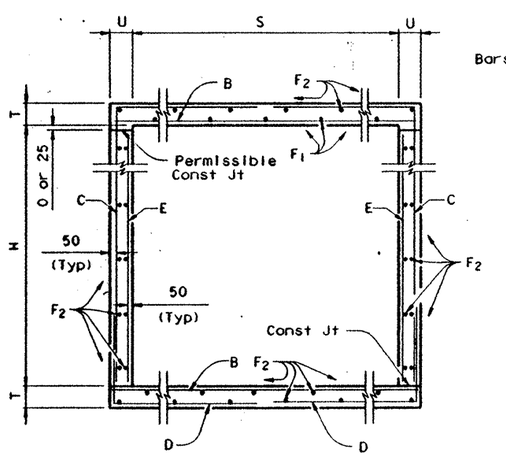

TYPICAL SECTION

For Direct Traffic, construct slab to conform to crown of roadway while maintaining constant thickness of slab.

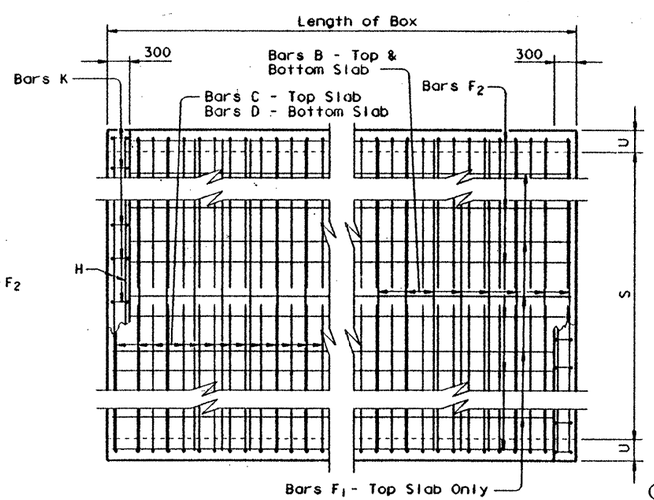

PLAN OF REINF STEEL

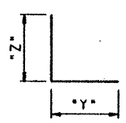

BARS D

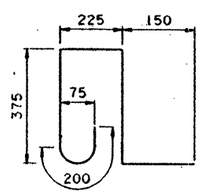

BARS K ~ #4
(Spa = 300 mm Max)
(Length = 1290 mm)

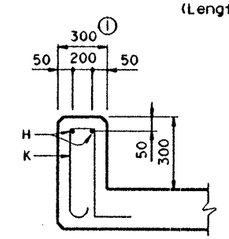

① For T6 Rail ~ see T6-CM(M) for additional details

SECTION THRU CURB

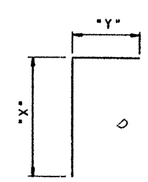

BARS C

GENERAL NOTES:

Designed according to current AASHTO Standard Specifications.
Designed for MS18 Loading and to the maximum fill height shown.
All reinforcing steel shall be Grade 420 (fy = 420 MPa).
All concrete shall have a minimum 28 day compressive strength of 25 MPa.
The bottom edge of the top slab shall be chamfered 75 mm at the entrance. Reinforcing bars shall be adjusted to provide a minimum of 35 mm clear cover. Headwall heights will be reduced, if necessary, to provide a maximum 75 mm projection above the roadway slope. No increase or decrease will be made in plan quantities of concrete or reinforcing steel for this work.
Construction joints shown at the flow line may be raised a maximum of 150 mm at the Contractor's option. If this option is used, bars E may be cut off or raised, and bars C and D may be reversed.
All dimensions are in millimeters and all mass is in kilograms unless otherwise noted.

Texas Department of Transportation
Design Division (Bridge)

SINGLE BOX CULVERTS CAST-IN-PLACE DIRECT TRAFFIC TO 9 m MAX FILL

SCC-1.5(M)

FILE: scc15std.dgn	DN: GAF	CK: TEB	DW: TxDOT	CK: GAF	STD: B41M
ORIG DATE: JANUARY 1997	DIST 15	FED REG 6	FEDERAL AID PROJECT CD		SHEET 239
REVISIONS	COUNTY BEXAR		CONTROL	SECT	JOB / HIGHWAY 1604

DISCLAIMER:
The use of this standard is governed by the "Texas Engineering Practice Act". No warranty of any kind is made by TxDOT for any purpose whatsoever. TxDOT assumes no responsibility for the conversion of this standard to other formats or for incorrect results or damages resulting from its use.

LEVELS DISPLAYED
ACC:
(LV=1.3 for Metric)

BILLS OF REINFORCING STEEL (For Box Length = 10 meters)

SECTION DIMENSIONS S	H	T	U	FILL HEIGHT, m ②	Bars B Number	Size	Spa	Lgth	Mass	Bars C Number	Size	Spa	Lgth	Mass	"X"	"Y"	Bars D Number	Size	Spa	Lgth	Mass	"Y"	"Z"	Bars E~#4 at 450 mm Max No.	Lgth	Mass	Bars F1~#4 No.	Spa	Length	Mass	Bars F2~#4 at 450 mm Max No.	Length	Mass	Bars H 4~#4 Lgth	Mass	Bars K No.	Mass	QUANTITIES Per Meter of Barrel Conc (m³)	Reinf (kg)	Curb Conc (m³)	Reinf (kg)	Total Conc (m³)	Reinf (kg)
1,800	900	175	175	6.0	162	#5	125	2,050	515	134	#5	150	2,000	416	1,030	970	134	#5	150	1,800	374	970	830	46	900	41	10	175	9,900	98	29	9,900	285	2,070	8	16	21	1.07	172.9	0.4	29	11.1	1,758
1,800	900	200	175	8.0	134	#6	150	2,050	614	134	#5	150	2,020	420	1,050	970	134	#5	150	1,820	379	970	850	46	900	41	5	450	9,900	49	29	9,900	285	2,070	8	16	21	1.18	178.8	0.4	29	12.1	1,817
1,800	900	225	200	9.0	134	#6	150	2,100	629	134	#5	150	2,050	426	1,080	970	134	#5	150	1,850	385	970	880	46	900	41	5	450	9,900	49	29	9,900	285	2,120	8	16	21	1.35	181.5	0.4	29	13.9	1,844
1,800	1,200	175	175	6.0	162	#5	125	2,050	515	162	#4	125	2,200	354	1,330	870	162	#4	125	1,560	251	870	690	46	1,200	55	10	175	9,900	98	29	9,900	285	2,070	8	16	21	1.17	155.8	0.4	29	12.1	1,587
1,800	1,200	200	175	8.0	162	#6	125	2,050	742	134	#5	150	2,320	482	1,350	970	134	#5	150	1,820	379	970	850	46	1,200	55	5	450	9,900	49	29	9,900	285	2,070	8	16	21	1.28	199.2	0.4	29	13.2	2,021
1,800	1,200	225	200	9.0	134	#6	150	2,100	629	134	#5	150	2,350	489	1,380	970	134	#5	150	1,850	385	970	880	46	1,200	55	5	450	9,900	49	29	9,900	285	2,120	8	16	21	1.47	189.2	0.4	29	15.1	1,921
1,800	1,500	175	175	6.0	162	#5	125	2,050	515	162	#4	125	2,500	403	1,630	870	162	#4	125	1,560	251	870	690	46	1,500	69	10	175	9,900	98	33	9,900	325	2,070	8	16	21	1.28	166.1	0.4	29	13.2	1,690
1,800	1,500	200	175	8.0	162	#6	125	2,050	742	134	#5	150	2,620	545	1,650	970	134	#5	150	1,820	379	970	850	46	1,500	69	5	450	9,900	49	33	9,900	325	2,070	8	16	21	1.39	210.9	0.4	29	14.2	2,138
1,800	1,500	225	200	9.0	162	#6	125	2,100	760	134	#5	150	2,650	551	1,680	970	134	#5	150	1,850	385	970	880	46	1,500	69	5	450	9,900	49	33	9,900	325	2,120	8	16	21	1.59	213.9	0.4	29	16.3	2,168
1,800	1,800	175	175	6.0	162	#5	125	2,050	515	162	#4	125	2,800	451	1,930	870	162	#4	125	1,560	251	870	690	46	1,800	82	10	175	9,900	98	37	9,900	364	2,070	8	16	21	1.38	176.1	0.4	29	14.2	1,790
1,800	1,800	200	175	8.0	162	#6	125	2,050	742	134	#5	150	2,920	607	1,950	970	134	#5	150	1,820	379	970	850	46	1,800	82	5	450	9,900	49	37	9,900	364	2,070	8	16	21	1.49	222.3	0.4	29	15.3	2,252
1,800	1,800	225	200	9.0	162	#6	125	2,100	760	134	#5	150	2,950	614	1,980	970	134	#5	150	1,850	385	970	880	46	1,800	82	5	450	9,900	49	37	9,900	364	2,120	8	16	21	1.71	225.4	0.4	29	17.5	2,283

② Minimum fill height shown shall be used for direct traffic loading.

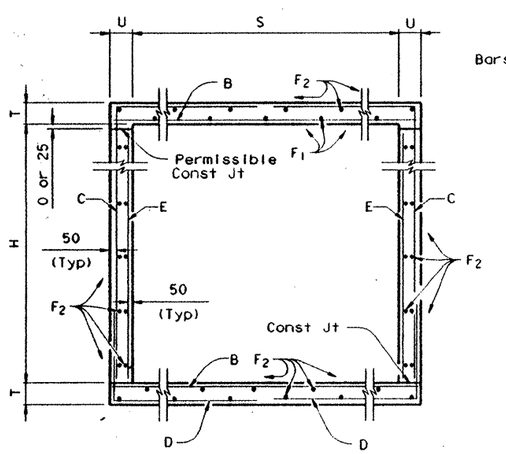

TYPICAL SECTION

For Direct Traffic, construct slab to conform to crown of roadway while maintaining constant thickness of slab.

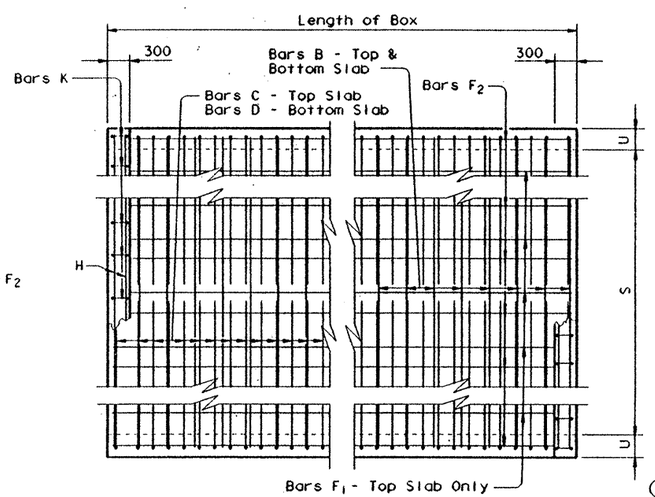

PLAN OF REINF STEEL

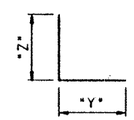

BARS D

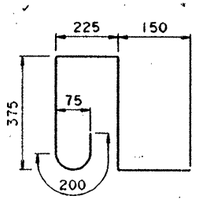

BARS K ~ #4
(Spa = 300 mm Max)
(Length = 1290 mm)

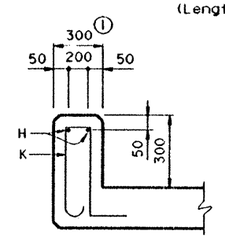

① For T6 Rail ~ see T6-CM(M) for additional details

SECTION THRU CURB

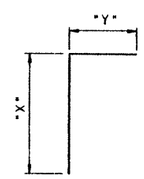

BARS C

GENERAL NOTES:

Designed according to current AASHTO Standard Specifications.
Designed for MS18 Loading and to the maximum fill height shown.
All reinforcing steel shall be Grade 420 (fy = 420 MPa).
All concrete shall have a minimum 28 day compressive strength of 25 MPa.
The bottom edge of the top slab shall be chamfered 75 mm at the entrance. Reinforcing bars shall be adjusted to provide a minimum of 35 mm clear cover. Headwall heights will be reduced, if necessary, to provide a maximum 75 mm projection above the roadway slope. No increase or decrease will be made in plan quantities of concrete or reinforcing steel for this work.
Construction joints shown at the flow line may be raised a maximum of 150 mm at the Contractor's option. If this option is used, bars E may be cut off or raised, and bars C and D may be reversed.
All dimensions are in millimeters and all mass is in kilograms unless otherwise noted.

DISCLAIMER:
The use of this standard is governed by the "Texas Engineering Practice Act". No warranty of any kind is made by TxDOT for any purpose whatsoever. TxDOT assumes no responsibility for the conversion of this standard to other formats or for incorrect results or damages resulting from its use.

LEVELS DISPLAYED: 1 3 ACC: (LV=1,3 for Metric)

Texas Department of Transportation
Design Division (Bridge)

SINGLE BOX CULVERTS CAST-IN-PLACE DIRECT TRAFFIC TO 9 m MAX FILL

SCC-1.8(M)

FILE: scc18std.dgn	DN: GAF	CK: TEB	DW: TxDOT	CK: GAF	STD: B42M
ORIG DATE: JANUARY 1997	DIST 15	FED REC 6	FEDERAL AID PROJECT #		SHEET 240
REVISIONS	COUNTY BEXAR		CONTROL	SECT	JOB	HIGHWAY 1604

DISCLAIMER:
The use of this standard is governed by the "Texas Engineering Practic Act". No warranty of any kind is made by TxDOT for any purpose whatsoever. TxDOT assumes no responsibility for the conversion of this standard to other formats or for incorrect results or damages resulting from its use.

BILLS OF REINFORCING STEEL (For Box Length = 10 meters)

NUMBER OF SPANS	SECTION DIMENSIONS S	H	T	U	Bars B No.	Size	Spa	Length	Mass	Bars C & D No.	Size	Spa	Bar C Lgth	Bar C Mass	Bar D Lgth	Bar D Mass	Bars E No.	Size	Spa	Length	Mass
2	1,500	600	175	175	162	#4	125	3,430	552	134	#4	150	2,120	282	2,080	277	134	#5	150	1,760	366
3	1,500	600	175	175	162	#4	125	5,100	821	134	#4	150	2,120	282	2,080	277	134	#5	150	3,440	715
4	1,500	600	175	175	162	#4	125	6,780	1,092	134	#4	150	2,120	282	2,080	277	134	#5	150	5,110	1,063
5	1,500	600	175	175	162	#4	125	8,450	1,361	134	#4	150	2,120	282	2,080	277	134	#5	150	6,790	1,412
6	1,500	600	175	175	162	#4	125	10,130	1,631	134	#4	150	2,120	282	2,080	277	134	#5	150	8,460	1,759
2	1,500	900	175	175	162	#4	125	3,430	552	116	#4	175	2,420	279	2,080	240	134	#5	150	1,760	366
3	1,500	900	175	175	162	#4	125	5,100	821	116	#4	175	2,420	279	2,080	240	134	#5	150	3,440	715
4	1,500	900	175	175	162	#4	125	6,780	1,092	116	#4	175	2,420	279	2,080	240	134	#5	150	5,110	1,063
5	1,500	900	175	175	162	#4	125	8,450	1,361	116	#4	175	2,420	279	2,080	240	134	#5	150	6,790	1,412
6	1,500	900	175	175	162	#4	125	10,130	1,631	116	#4	175	2,420	279	2,080	240	134	#5	150	8,460	1,759
2	1,500	1,200	175	175	162	#4	125	3,430	552	116	#4	175	2,720	314	2,080	240	134	#5	150	1,760	366
3	1,500	1,200	175	175	162	#4	125	5,100	821	116	#4	175	2,720	314	2,080	240	134	#5	150	3,440	715
4	1,500	1,200	175	175	162	#4	125	6,780	1,092	116	#4	175	2,720	314	2,080	240	134	#5	150	5,110	1,063
5	1,500	1,200	175	175	162	#4	125	8,450	1,361	116	#4	175	2,720	314	2,080	240	134	#5	150	6,790	1,412
6	1,500	1,200	175	175	162	#4	125	10,130	1,631	116	#4	175	2,720	314	2,080	240	134	#5	150	8,460	1,759
2	1,500	1,500	175	175	162	#4	125	3,430	552	116	#4	175	3,020	348	2,080	240	134	#5	150	1,760	366
3	1,500	1,500	175	175	162	#4	125	5,100	821	116	#4	175	3,020	348	2,080	240	134	#5	150	3,440	715
4	1,500	1,500	175	175	162	#4	125	6,780	1,092	116	#4	175	3,020	348	2,080	240	134	#5	150	5,110	1,063
5	1,500	1,500	175	175	162	#4	125	8,450	1,361	116	#4	175	3,020	348	2,080	240	134	#5	150	6,790	1,412
6	1,500	1,500	175	175	162	#4	125	10,130	1,631	116	#4	175	3,020	348	2,080	240	134	#5	150	8,460	1,759

NUMBER OF SPANS	Bars F_1 ~ #4 No.	Spa	Length	Mass	Bars F_2 ~ #4 450 mm Max No.	Length	Mass	Bars M ~ #4 450 mm Max No.	Lgth	Mass	Bars Y & Z ~ #4 300 mm Max No.	Bar Y Lgth	Bar Y Mass	Bar Z Lgth	Bar Z Mass	Bars H 4 ~ #4 Length	Mass	Bars K No.	Mass
2	14	200	9,900	138	38	9,900	374	46	600	27	34	1,410	48	1,490	50	3,450	14	26	33
3	21	200	9,900	207	54	9,900	531	46	600	27	68	1,410	95	1,490	101	5,120	20	36	46
4	28	200	9,900	276	70	9,900	689	46	600	27	102	1,410	143	1,490	151	6,800	27	48	62
5	35	200	9,900	344	86	9,900	846	46	600	27	136	1,410	191	1,490	201	8,470	34	60	77
6	42	200	9,900	413	102	9,900	1,004	46	600	27	170	1,410	238	1,490	252	10,150	40	70	90
2	14	200	9,900	138	44	9,900	433	46	900	41	34	1,410	48	2,090	71	3,450	14	26	33
3	21	200	9,900	207	62	9,900	610	46	900	41	68	1,410	95	2,090	141	5,120	20	36	46
4	28	200	9,900	276	80	9,900	787	46	900	41	102	1,410	143	2,090	212	6,800	27	48	62
5	35	200	9,900	344	98	9,900	964	46	900	41	136	1,410	191	2,090	283	8,470	34	60	77
6	42	200	9,900	413	116	9,900	1,142	46	900	41	170	1,410	238	2,090	353	10,150	40	70	90
2	14	200	9,900	138	44	9,900	433	46	1,200	55	34	1,410	48	2,690	91	3,450	14	26	33
3	21	200	9,900	207	62	9,900	610	46	1,200	55	68	1,410	95	2,690	182	5,120	20	36	46
4	28	200	9,900	276	80	9,900	787	46	1,200	55	102	1,410	143	2,690	273	6,800	27	48	62
5	35	200	9,900	344	98	9,900	964	46	1,200	55	136	1,410	191	2,690	364	8,470	34	60	77
6	42	200	9,900	413	116	9,900	1,142	46	1,200	55	170	1,410	238	2,690	455	10,150	40	70	90
2	14	200	9,900	138	50	9,900	492	46	1,500	69	34	1,410	48	3,290	111	3,450	14	26	33
3	21	200	9,900	207	70	9,900	689	46	1,500	69	68	1,410	95	3,290	222	5,120	20	36	46
4	28	200	9,900	276	90	9,900	886	46	1,500	69	102	1,410	143	3,290	334	6,800	27	48	62
5	35	200	9,900	344	110	9,900	1,082	46	1,500	69	136	1,410	191	3,290	445	8,470	34	60	77
6	42	200	9,900	413	130	9,900	1,279	46	1,500	69	170	1,410	238	3,290	556	10,150	40	70	90

QUANTITIES

NUMBER OF SPANS	Per Meter of Barrel Conc (m^3)	Reinf (kg)	Curb Conc (m^3)	Reinf (kg)	Total Conc (m^3)	Reinf (kg)
2	1.55	211.4	0.6	47	16.1	2,161
3	2.24	305.6	0.9	66	23.3	3,122
4	2.93	400.0	1.2	89	30.6	4,089
5	3.62	494.1	1.5	111	37.8	5,052
6	4.31	588.3	1.8	130	45.0	6,013
2	1.71	216.8	0.6	47	17.7	2,215
3	2.45	314.9	0.9	66	25.4	3,215
4	3.19	413.3	1.2	89	33.2	4,222
5	3.94	511.5	1.5	111	40.9	5,226
6	4.68	609.6	1.8	130	48.7	6,226
2	1.86	223.7	0.6	47	19.3	2,284
3	2.66	323.9	0.9	66	27.5	3,305
4	3.46	424.3	1.2	89	35.8	4,332
5	4.25	524.5	1.5	111	44.1	5,356
6	5.05	624.7	1.8	130	52.3	6,377
2	2.02	236.4	0.6	47	20.8	2,411
3	2.87	340.6	0.9	66	29.6	3,472
4	3.72	445.1	1.2	89	38.4	4,540
5	4.57	549.2	1.5	111	47.2	5,603
6	5.42	653.3	1.8	130	56.0	6,663

H	Bar Dimensions "X"	"Y"	"Z"
600	725	725	690
900	1,025	1,025	690
1,200	1,325	1,325	690
1,500	1,625	1,625	690

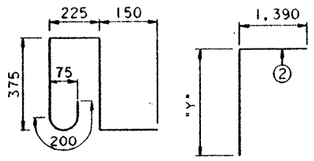

BARS K ~ #4 (Spa = 300 mm Max) (Length = 1,290 mm)

BARS C

BARS D

BARS Y

② Extend into slab.

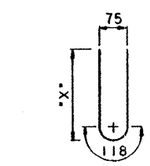

BARS Z

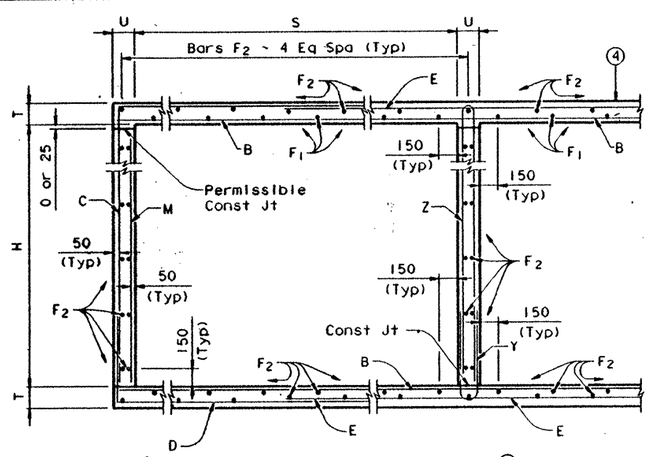

TYPICAL SECTION③

③ Reinforcing shown for orientation purposes only. See table for number and spacing of bars.

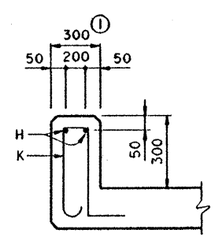

① For T6 Rail ~ see T6-CM(M) for additional details

SECTION THRU CURB

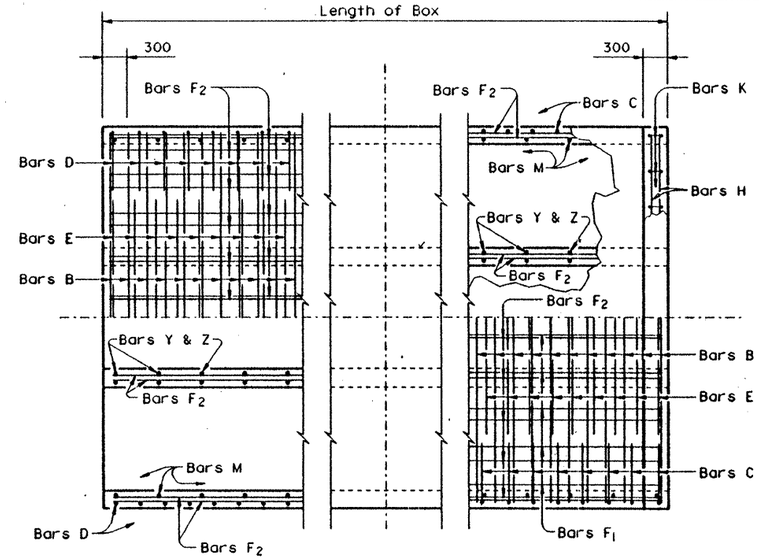

PART PLANS③

④ For Direct Traffic, construct top slab to conform to crown of roadway while maintaining constant thickness of slab.

GENERAL NOTES:

Designed according to current AASHTO 1992 Standard Specifications.

Designed for MS18 Loading and to the maximum fill height shown.

All reinforcing steel shall be Grade 420 (fy = 420 MPa).

All concrete shall have a minimum 28 day compressive strength of 25 MPa.

The bottom edge of the top slab shall be chamfered 75 mm at the entrance. Reinforcing bars shall be adjusted to provide a minimum of 35 mm clear cover. Headwall heights will be reduced, if necessary, to provide a minimum 75 mm projection above the roadway slope. No increase or decrease will be made in plan quantities of concrete or reinforcing steel for this work.

Construction joints shown at the flow line may be raised a maximum of 150 mm at the Contractor's option. If this option is used, bars M may be cut off or raised, bars C and D may be reversed, and Bars Y & Z may be reversed.

All dimensions are in millimeters and all mass is in kilograms unless otherwise noted.

Texas Department of Transportation
Design Division (Bridge)

MULTIPLE BOX CULVERTS
1,500 mm SPAN
DIRECT TRAFFIC TO 6 m MAX FILL

MC-1.5-6(M)

FILE: mc156std.dgn	DN: KRP	CK: GAF	DW: TxDOT	CK: GAF	STD: B65M
ORIG DATE: JANUARY 1997	DIST 15	FED REG 6	FEDERAL AID PROJECT		SHEET 241
REVISIONS	COUNTY BEXAR		CONTROL	SECT	JOB	HIGHWAY 1604

LEVELS DISPLAYED: 1 3 ACC: (LV=1.3 for Metric)

BILLS OF REINFORCING STEEL (For Box Length = 10 meters)

NUMBER OF SPANS	SECTION DIMENSIONS S	H	T	U	Bars B No.	Size	Spa	Length	Mass	Bars C & D No.	Size	Spa	Bar C Lgth	Bar C Mass	Bar D Lgth	Bar D Mass	Bars E No.	Size	Spa	Length	Mass
2	1,800	900	175	175	134	#5	150	4,030	838	134	#4	150	2,680	357	2,340	312	162	#5	125	1,840	463
3	1,800	900	175	175	134	#5	150	6,000	1,248	134	#4	150	2,680	357	2,340	312	162	#5	125	3,820	960
4	1,800	900	175	175	134	#5	150	7,980	1,660	134	#4	150	2,680	357	2,340	312	162	#5	125	5,790	1,456
5	1,800	900	175	175	134	#5	150	9,950	2,069	134	#4	150	2,680	357	2,340	312	162	#5	125	7,770	1,954
6	1,800	900	175	175	134	#5	150	11,930	2,481	134	#4	150	2,680	357	2,340	312	162	#5	125	9,740	2,449
2	1,800	1,200	175	175	134	#5	150	4,030	838	134	#4	150	2,980	397	2,340	312	162	#5	125	1,840	463
3	1,800	1,200	175	175	134	#5	150	6,000	1,248	134	#4	150	2,980	397	2,340	312	162	#5	125	3,820	960
4	1,800	1,200	175	175	134	#5	150	7,980	1,660	134	#4	150	2,980	397	2,340	312	162	#5	125	5,790	1,456
5	1,800	1,200	175	175	134	#5	150	9,950	2,069	134	#4	150	2,980	397	2,340	312	162	#5	125	7,770	1,954
6	1,800	1,200	175	175	134	#5	150	11,930	2,481	134	#4	150	2,980	397	2,340	312	162	#5	125	9,740	2,449
2	1,800	1,500	175	175	134	#5	150	4,030	838	134	#4	150	3,280	437	2,340	312	162	#5	125	1,840	463
3	1,800	1,500	175	175	134	#5	150	6,000	1,248	134	#4	150	3,280	437	2,340	312	162	#5	125	3,820	960
4	1,800	1,500	175	175	134	#5	150	7,980	1,660	134	#4	150	3,280	437	2,340	312	162	#5	125	5,790	1,456
5	1,800	1,500	175	175	134	#5	150	9,950	2,069	134	#4	150	3,280	437	2,340	312	162	#5	125	7,770	1,954
6	1,800	1,500	175	175	134	#5	150	11,930	2,481	134	#4	150	3,280	437	2,340	312	162	#5	125	9,740	2,449
2	1,800	1,800	175	175	134	#5	150	4,030	838	162	#4	125	3,580	576	2,340	377	162	#5	125	1,840	463
3	1,800	1,800	175	175	134	#5	150	6,000	1,248	162	#4	125	3,580	576	2,340	377	162	#5	125	3,820	960
4	1,800	1,800	175	175	134	#5	150	7,980	1,660	162	#4	125	3,580	576	2,340	377	162	#5	125	5,790	1,456
5	1,800	1,800	175	175	134	#5	150	9,950	2,069	162	#4	125	3,580	576	2,340	377	162	#5	125	7,770	1,954
6	1,800	1,800	175	175	134	#5	150	11,930	2,481	162	#4	125	3,580	576	2,340	377	162	#5	125	9,740	2,449

NUMBER OF SPANS	Bars F_1~#4 No.	Spa	Length	Mass	Bars F_2~#4 450 mm Max No.	Length	Mass	Bars M~#4 450 mm Max No.	Lgth	Mass	Bars Y & Z~#4 300 mm Max No.	Bar Y Lgth	Bar Y Mass	Bar Z Lgth	Bar Z Mass	Bars H 4~#4 Length	Mass	Bars K No.	Mass
2	16	225	9,900	157	50	9,900	492	46	900	41	34	1,410	48	2,090	71	4,050	16	30	38
3	24	225	9,900	236	71	9,900	699	46	900	41	68	1,410	95	2,090	141	6,020	24	42	54
4	32	225	9,900	315	92	9,900	905	46	900	41	102	1,410	143	2,090	212	8,000	32	56	72
5	40	225	9,900	394	113	9,900	1,112	46	900	41	136	1,410	191	2,090	283	9,970	40	70	90
6	48	225	9,900	472	134	9,900	1,319	46	900	41	170	1,410	238	2,090	353	11,950	48	82	105
2	16	225	9,900	157	50	9,900	492	46	1,200	55	34	1,410	48	2,690	91	4,050	16	30	38
3	24	225	9,900	236	71	9,900	699	46	1,200	55	68	1,410	95	2,690	182	6,020	24	42	54
4	32	225	9,900	315	92	9,900	905	46	1,200	55	102	1,410	143	2,690	273	8,000	32	56	72
5	40	225	9,900	394	113	9,900	1,112	46	1,200	55	136	1,410	191	2,690	364	9,970	40	70	90
6	48	225	9,900	472	134	9,900	1,319	46	1,200	55	170	1,410	238	2,690	455	11,950	48	82	105
2	16	225	9,900	157	56	9,900	551	46	1,500	69	34	1,410	48	3,290	111	4,050	16	30	38
3	24	225	9,900	236	79	9,900	777	46	1,500	69	68	1,410	95	3,290	222	6,020	24	42	54
4	32	225	9,900	315	102	9,900	1,004	46	1,500	69	102	1,410	143	3,290	334	8,000	32	56	72
5	40	225	9,900	394	125	9,900	1,230	46	1,500	69	136	1,410	191	3,290	445	9,970	40	70	90
6	48	225	9,900	472	148	9,900	1,456	46	1,500	69	170	1,410	238	3,290	556	11,950	48	82	105
2	16	225	9,900	157	62	9,900	610	46	1,800	82	34	1,410	48	3,890	131	4,050	16	30	38
3	24	225	9,900	236	87	9,900	856	46	1,800	82	68	1,410	95	3,890	263	6,020	24	42	54
4	32	225	9,900	315	112	9,900	1,102	46	1,800	82	102	1,410	143	3,890	394	8,000	32	56	72
5	40	225	9,900	394	137	9,900	1,348	46	1,800	82	136	1,410	191	3,890	526	9,970	40	70	90
6	48	225	9,900	472	162	9,900	1,594	46	1,800	82	170	1,410	238	3,890	657	11,950	48	82	105

QUANTITIES

NUMBER OF SPANS	Per Meter of Barrel Conc (m^3)	Reinf (kg)	Curb Conc (m^3)	Reinf (kg)	Total Conc (m^3)	Reinf (kg)
2	1.92	277.9	0.7	54	19.9	2,833
3	2.77	408.9	1.1	78	28.7	4,167
4	3.61	540.1	1.5	104	37.6	5,505
5	4.46	671.3	1.8	130	46.4	6,843
6	5.31	802.2	2.2	153	55.3	8,175
2	2.07	285.3	0.7	54	21.5	2,907
3	2.98	418.4	1.1	78	30.8	4,262
4	3.88	551.6	1.5	104	40.2	5,620
5	4.78	684.8	1.8	130	49.6	6,978
6	5.68	817.8	2.2	153	59.0	8,331
2	2.23	298.6	0.7	54	23.1	3,040
3	3.19	435.6	1.1	78	32.9	4,434
4	4.14	573.0	1.5	104	42.8	5,834
5	5.09	710.1	1.8	130	52.7	7,231
6	6.05	847.0	2.2	153	62.6	8,623
2	2.39	328.2	0.7	54	24.6	3,336
3	3.40	469.3	1.1	78	35.0	4,771
4	4.40	610.5	1.5	104	45.5	6,209
5	5.41	751.7	1.8	130	55.9	7,647
6	6.41	892.6	2.2	153	66.3	9,079

H	Bar Dimensions "X"	"Y"	"Z"
900	1,025	1,025	690
1,200	1,325	1,325	690
1,500	1,625	1,625	690
1,800	1,925	1,925	690

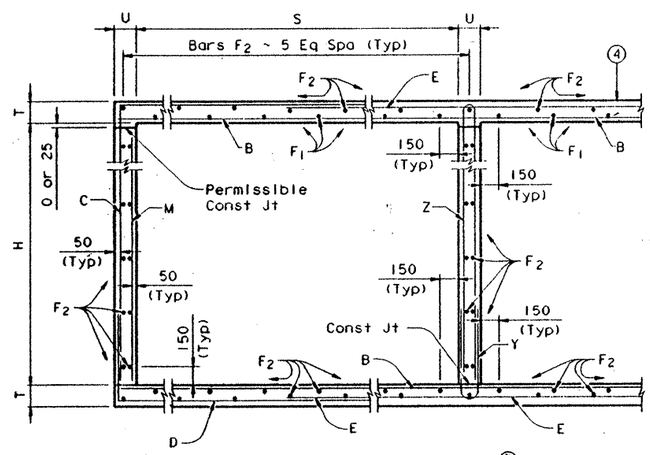

TYPICAL SECTION③

③ Reinforcing shown for orientation purposes only. See table for number and spacing of bars.

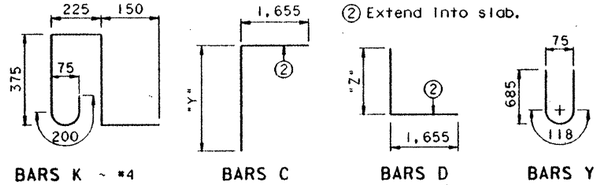

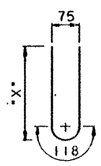

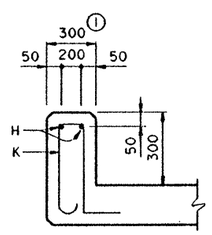

① For T6 Rail ~ see T6-CM(M) for additional details

SECTION THRU CURB

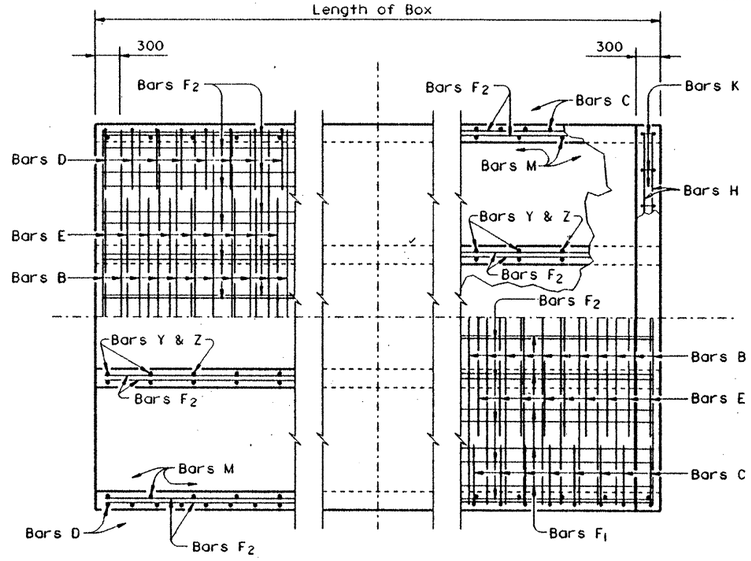

PART PLANS③

④ For Direct Traffic, construct top slab to conform to crown of roadway while maintaining constant thickness of slab.

GENERAL NOTES:

Designed according to current AASHTO 1992 Standard Specifications.

Designed for MS18 Loading and to the maximum fill height shown.

All reinforcing steel shall be Grade 420 (fy = 420 MPa).

All concrete shall have a minimum 28 day compressive strength of 25 MPa.

The bottom edge of the top slab shall be chamfered 75 mm at the entrance. Reinforcing bars shall be adjusted to provide a minimum of 35 mm clear cover. Headwall heights will be reduced, if necessary, to provide a minimum 75 mm projection above the roadway slope. No increase or decrease will be made in plan quantities of concrete or reinforcing steel for this work.

Construction joints shown at the flow line may be raised a maximum of 150 mm at the Contractor's option. If this option is used, bars M may be cut off or raised, bars C and D may be reversed, and Bars Y & Z may be reversed.

All dimensions are in millimeters and all mass is in kilograms unless otherwise noted.

DISCLAIMER: The use of this standard is governed by the "Texas Engineering Practice Act". No warranty of any kind is made by TxDOT for any purpose whatsoever. TxDOT assumes no responsibility for the conversion of this standard to other formats or for incorrect results or damages resulting from its use.

LEVELS DISPLAYED | ACC: | (LV=1.3 for Metric)

Texas Department of Transportation
Design Division (Bridge)

MULTIPLE BOX CULVERTS
1,800 mm SPAN
DIRECT TRAFFIC TO 5 m MAX FILL

MC-1.8-5(M)

FILE: mc185std.dgn	DN: KRP	CK: GAF	DW: TxDOT	CK: GAF	STD: B67M
ORIG DATE: JANUARY 1997	DIST 15	FED REG 6	FEDERAL AID PROJECT		SHEET 24 A
REVISIONS	COUNTY BEXAR		CONTROL	SECT	JOB 1604	HIGHWAY

BILLS OF REINFORCING STEEL (For Box Length = 10 meters)

NUMBER OF SPANS	SECTION DIMENSIONS S	H	T	U	Bars B No.	Size	Spa	Length	Mass	Bars C & D No.	Size	Spa	Bar C Lgth	Bar C Mass	Bar D Lgth	Bar D Mass	Bars E No.	Size	Spa	Length	Mass
2	2,100	900	175	175	162	#5	125	4,630	1,164	134	#4	150	2,700	360	2,360	314	162	#5	125	2,420	608
3	2,100	900	175	175	162	#5	125	6,900	1,735	134	#4	150	2,700	360	2,360	314	162	#5	125	4,700	1,182
4	2,100	900	175	175	162	#5	125	9,180	2,308	134	#4	150	2,700	360	2,360	314	162	#5	125	6,970	1,752
5	2,100	900	175	175	162	#5	125	11,450	2,879	134	#4	150	2,700	360	2,360	314	162	#5	125	9,250	2,326
6	2,100	900	175	175	162	#5	125	13,730	3,452	134	#4	150	2,700	360	2,360	314	162	#5	125	11,520	2,896
2	2,100	1,200	175	175	162	#5	125	4,630	1,164	134	#4	150	3,000	400	2,360	314	162	#5	125	2,420	608
3	2,100	1,200	175	175	162	#5	125	6,900	1,735	134	#4	150	3,000	400	2,360	314	162	#5	125	4,700	1,182
4	2,100	1,200	175	175	162	#5	125	9,180	2,308	134	#4	150	3,000	400	2,360	314	162	#5	125	6,970	1,752
5	2,100	1,200	175	175	162	#5	125	11,450	2,879	134	#4	150	3,000	400	2,360	314	162	#5	125	9,250	2,326
6	2,100	1,200	175	175	162	#5	125	13,730	3,452	134	#4	150	3,000	400	2,360	314	162	#5	125	11,520	2,896
2	2,100	1,500	175	175	162	#5	125	4,630	1,164	134	#4	150	3,300	440	2,360	314	162	#5	125	2,420	608
3	2,100	1,500	175	175	162	#5	125	6,900	1,735	134	#4	150	3,300	440	2,360	314	162	#5	125	4,700	1,182
4	2,100	1,500	175	175	162	#5	125	9,180	2,308	134	#4	150	3,300	440	2,360	314	162	#5	125	6,970	1,752
5	2,100	1,500	175	175	162	#5	125	11,450	2,879	134	#4	150	3,300	440	2,360	314	162	#5	125	9,250	2,326
6	2,100	1,500	175	175	162	#5	125	13,730	3,452	134	#4	150	3,300	440	2,360	314	162	#5	125	11,520	2,896
2	2,100	1,800	175	175	162	#5	125	4,630	1,164	134	#4	150	3,600	480	2,360	314	162	#5	125	2,420	608
3	2,100	1,800	175	175	162	#5	125	6,900	1,735	134	#4	150	3,600	480	2,360	314	162	#5	125	4,700	1,182
4	2,100	1,800	175	175	162	#5	125	9,180	2,308	134	#4	150	3,600	480	2,360	314	162	#5	125	6,970	1,752
5	2,100	1,800	175	175	162	#5	125	11,450	2,879	134	#4	150	3,600	480	2,360	314	162	#5	125	9,250	2,326
6	2,100	1,800	175	175	162	#5	125	13,730	3,452	134	#4	150	3,600	480	2,360	314	162	#5	125	11,520	2,896
2	2,100	2,100	175	175	162	#5	125	4,630	1,164	134	#4	150	3,900	519	2,360	314	162	#5	125	2,420	608
3	2,100	2,100	175	175	162	#5	125	6,900	1,735	134	#4	150	3,900	519	2,360	314	162	#5	125	4,700	1,182
4	2,100	2,100	175	175	162	#5	125	9,180	2,308	134	#4	150	3,900	519	2,360	314	162	#5	125	6,970	1,752
5	2,100	2,100	175	175	162	#5	125	11,450	2,879	134	#4	150	3,900	519	2,360	314	162	#5	125	9,250	2,326
6	2,100	2,100	175	175	162	#5	125	13,730	3,452	134	#4	150	3,900	519	2,360	314	162	#5	125	11,520	2,896

NUMBER OF SPANS	Bars F1~#4 No.	Spa	Length	Mass	Bars F2~#4 450 mm Max No.	Length	Mass	Bars M~#4 450 mm Max No.	Lgth	Mass	Bars Y & Z~#4 250 mm Max No.	Bar Y Lgth	Bar Y Mass	Bar Z Lgth	Bar Z Mass	Bars H 4~#4 Length	Mass	Bars K No.	Mass
2	20	200	9,900	197	54	9,900	531	46	900	41	41	1,410	57	2,090	85	4,650	18	34	44
3	30	200	9,900	295	77	9,900	758	46	900	41	82	1,410	115	2,090	170	6,920	28	48	62
4	40	200	9,900	394	100	9,900	984	46	900	41	123	1,410	172	2,090	256	9,200	37	64	82
5	50	200	9,900	492	123	9,900	1,210	46	900	41	164	1,410	230	2,090	341	11,470	46	80	103
6	60	200	9,900	590	146	9,900	1,437	46	900	41	205	1,410	287	2,090	426	13,750	55	94	121
2	20	200	9,900	197	54	9,900	531	46	1,200	55	41	1,410	57	2,690	110	4,650	18	34	44
3	30	200	9,900	295	77	9,900	758	46	1,200	55	82	1,410	115	2,690	219	6,920	28	48	62
4	40	200	9,900	394	100	9,900	984	46	1,200	55	123	1,410	172	2,690	329	9,200	37	64	82
5	50	200	9,900	492	123	9,900	1,210	46	1,200	55	164	1,410	230	2,690	439	11,470	46	80	103
6	60	200	9,900	590	146	9,900	1,437	46	1,200	55	205	1,410	287	2,690	548	13,750	55	94	121
2	20	200	9,900	197	60	9,900	590	46	1,500	69	41	1,410	57	3,290	134	4,650	18	34	44
3	30	200	9,900	295	85	9,900	836	46	1,500	69	82	1,410	115	3,290	268	6,920	28	48	62
4	40	200	9,900	394	110	9,900	1,082	46	1,500	69	123	1,410	172	3,290	402	9,200	37	64	82
5	50	200	9,900	492	135	9,900	1,328	46	1,500	69	164	1,410	230	3,290	536	11,470	46	80	103
6	60	200	9,900	590	160	9,900	1,574	46	1,500	69	205	1,410	287	3,290	670	13,750	55	94	121
2	20	200	9,900	197	66	9,900	649	46	1,800	82	41	1,410	57	3,890	159	4,650	18	34	44
3	30	200	9,900	295	93	9,900	915	46	1,800	82	82	1,410	115	3,890	317	6,920	28	48	62
4	40	200	9,900	394	120	9,900	1,181	46	1,800	82	123	1,410	172	3,890	476	9,200	37	64	82
5	50	200	9,900	492	147	9,900	1,447	46	1,800	82	164	1,410	230	3,890	634	11,470	46	80	103
6	60	200	9,900	590	174	9,900	1,712	46	1,800	82	205	1,410	287	3,890	793	13,750	55	94	121
2	20	200	9,900	197	66	9,900	649	46	2,100	96	41	1,410	57	4,490	183	4,650	18	34	44
3	30	200	9,900	295	93	9,900	915	46	2,100	96	82	1,410	115	4,490	366	6,920	28	48	62
4	40	200	9,900	394	120	9,900	1,181	46	2,100	96	123	1,410	172	4,490	549	9,200	37	64	82
5	50	200	9,900	492	147	9,900	1,447	46	2,100	96	164	1,410	230	4,490	732	11,470	46	80	103
6	60	200	9,900	590	174	9,900	1,712	46	2,100	96	205	1,410	287	4,490	915	13,750	55	94	121

QUANTITIES

NUMBER OF SPANS	Per Meter of Barrel Conc (m^3)	Reinf (kg)	Curb Conc (m^3)	Reinf (kg)	Total Conc (m^3)	Reinf (kg)
2	2.13	335.7	0.9	62	22.1	3,419
3	3.08	497.0	1.3	90	32.1	5,060
4	4.03	658.1	1.7	119	42.0	6,700
5	4.99	819.3	2.1	149	52.0	8,342
6	5.94	980.3	2.5	176	61.9	9,979
2	2.28	343.6	0.9	62	23.7	3,498
3	3.29	507.3	1.3	90	34.2	5,163
4	4.30	670.8	1.7	119	44.6	6,827
5	5.30	834.5	2.1	149	55.1	8,494
6	6.31	997.9	2.5	176	65.6	10,155
2	2.44	357.3	0.9	62	25.3	3,635
3	3.50	525.4	1.3	90	36.5	5,344
4	4.56	693.3	1.7	119	47.3	7,052
5	5.62	861.4	2.1	149	58.3	8,763
6	6.68	1,029.2	2.5	176	69.3	10,468
2	2.60	371.0	0.9	62	26.8	3,772
3	3.71	543.5	1.3	90	38.4	5,525
4	4.82	715.9	1.7	119	49.9	7,278
5	5.93	888.4	2.1	149	61.4	9,033
6	7.04	1,060.6	2.5	176	72.9	10,782
2	2.76	378.7	0.9	62	28.4	3,849
3	3.92	553.7	1.3	90	40.5	5,627
4	5.08	728.5	1.7	119	52.5	7,404
5	6.25	903.5	2.1	149	64.6	9,184
6	7.41	1,078.1	2.5	176	76.6	10,957

H	Bar Dimensions "X"	"Y"	"Z"
900	1,025	1,025	690
1,200	1,325	1,325	690
1,500	1,625	1,625	690
1,800	1,925	1,925	690
2,100	2,225	2,225	690

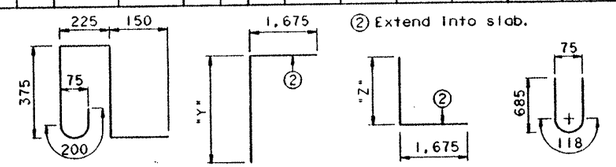

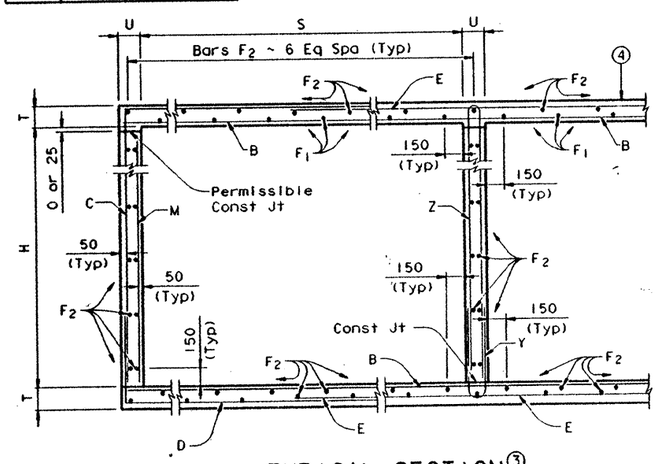

TYPICAL SECTION③

③ Reinforcing shown for orientation purposes only. See table for number and spacing of bars.

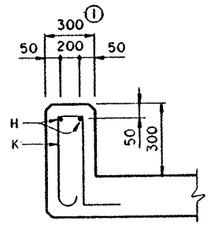

① For T6 Rail ~ see T6-CM(M) for additional details

SECTION THRU CURB

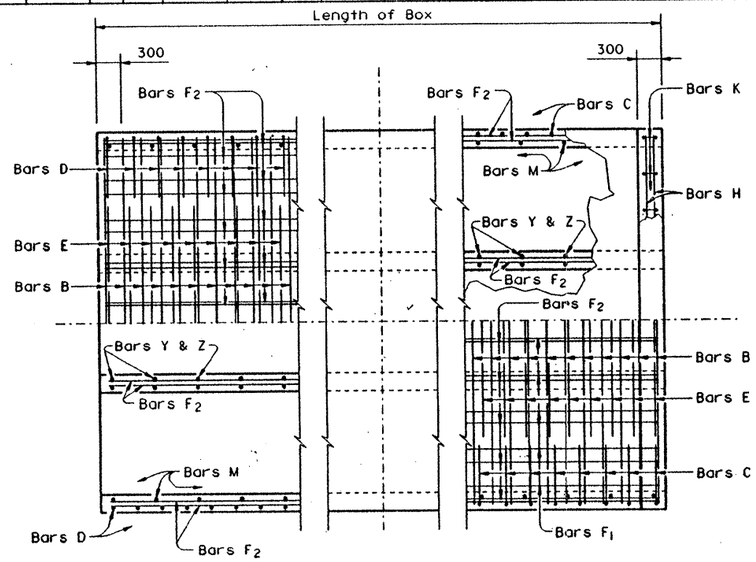

PART PLANS③

④ For Direct Traffic, construct top slab to conform to crown of roadway while maintaining constant thickness of slab.

GENERAL NOTES:

Designed according to current AASHTO 1992 Standard Specifications.

Designed for MS18 Loading and to the maximum fill height shown.

All reinforcing steel shall be Grade 420 (fy = 420 MPa).

All concrete shall have a minimum 28 day compressive strength of 25 MPa.

The bottom edge of the top slab shall be chamfered 75 mm at the entrance. Reinforcing bars shall be adjusted to provide a minimum of 35 mm clear cover. Headwall heights will be reduced, if necessary, to provide a minimum 75 mm projection above the roadway slope. No increase or decrease will be made in plan quantities of concrete or reinforcing steel for this work.

Construction joints shown at the flow line may be raised a maximum of 150 mm at the Contractor's option. If this option is used, bars M may be cut off or raised, bars C and D may be reversed, and Bars Y & Z may be reversed.

All dimensions are in millimeters and all mass is in kilograms unless otherwise noted.

Texas Department of Transportation
Design Division (Bridge)

MULTIPLE BOX CULVERTS
2,100 mm SPAN
DIRECT TRAFFIC TO 3 m MAX FILL

MC-2.1-3(M)

FILE: mc213std.dgn	DN: KRP	CK: GAF	DW: TxDOT	CK: GAF	STD: BTOM
ORIG DATE: JANUARY 1997	DIST 15	FED REG 6	FEDERAL AID PROJECT		SHEET 24 B
REVISIONS	COUNTY BEXAR		CONTROL	SECT	JOB	HIGHWAY 1604

DISCLAIMER:
The use of this standard is governed by the "Texas Engineering Practice Act". No warranty of any kind is made by TxDOT for any purpose whatsoever. TxDOT assumes no responsibility for the conversion of this standard to other formats or for incorrect results or damages resulting from its use.

ACC: (LV=1.3 for Metric)

LEVELS DISPLAYED 1 3

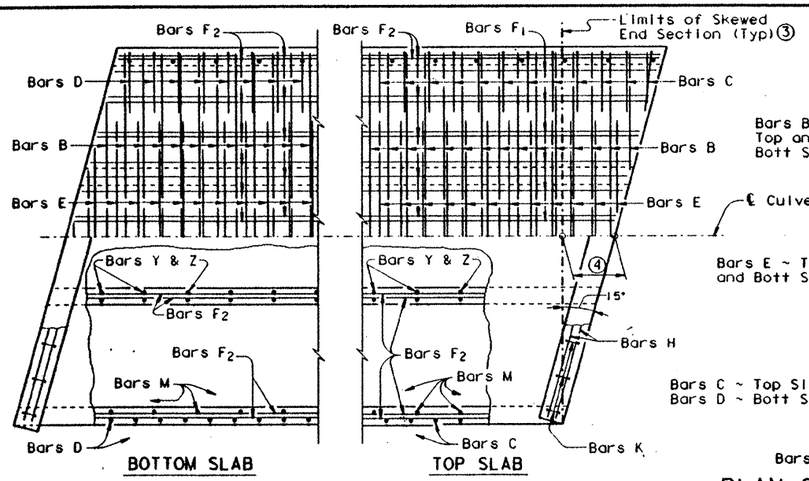

PLAN OF SKEWED ENDS ~ 15°

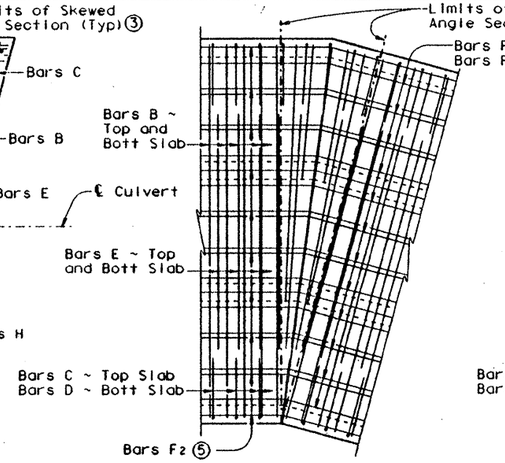

PLAN OF ANGLE SECTION ~ 15°

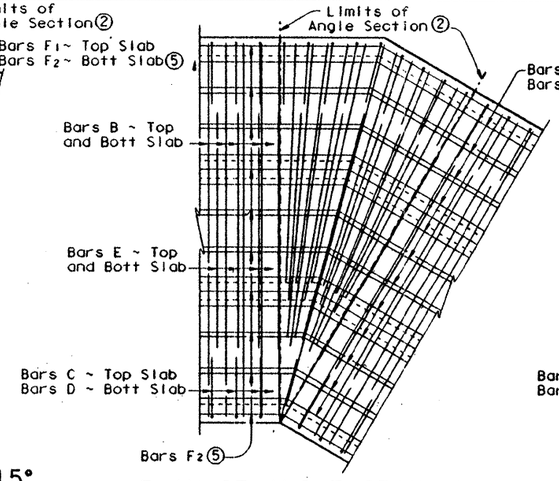

PLAN OF ANGLE SECTION ~ 30°

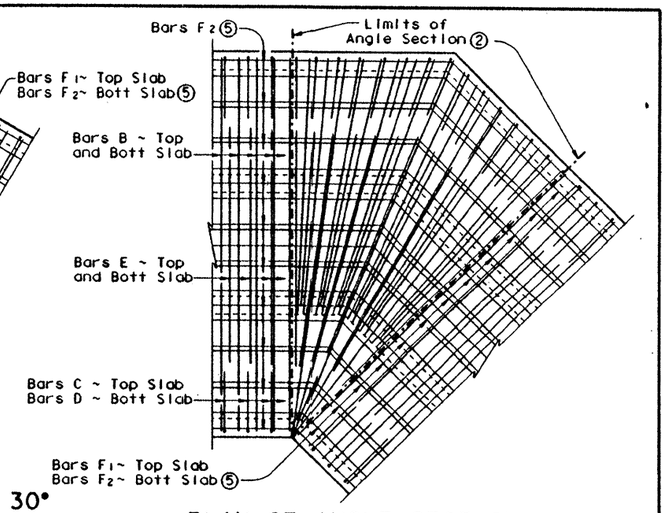

PLAN OF ANGLE SECTION ~ 45°

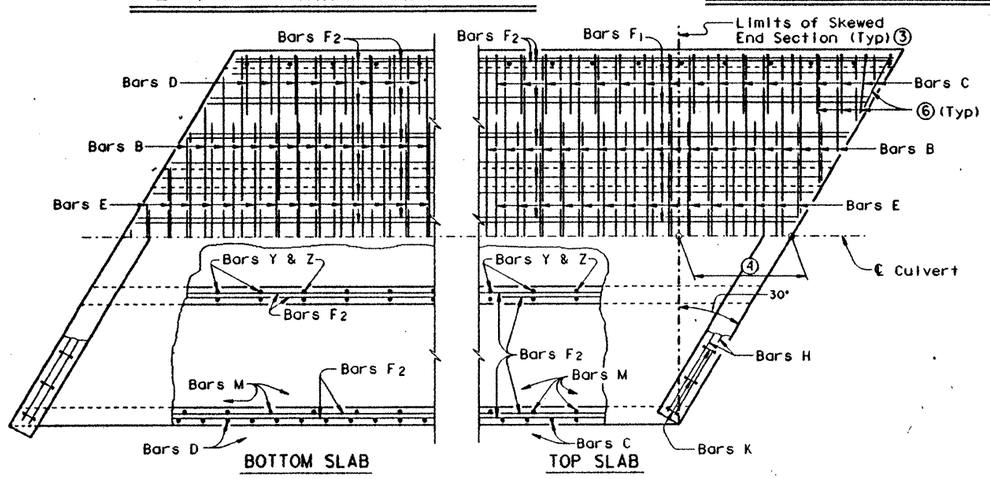

PLAN OF SKEWED ENDS ~ 30°

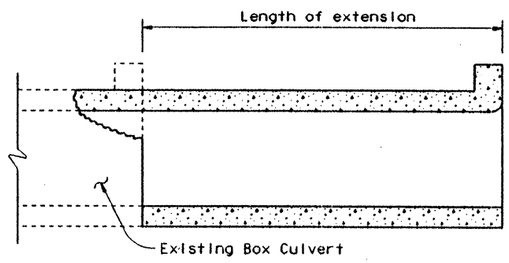

LENGTHENING DETAIL ①

① For box culverts with less than 0.6 m of fill, the top slab shall be broken back to provide a minimum 560 mm lap of the existing longitudinal bars with the longitudinal bars in the extension. If the depth of fill is 0.6 m or greater, the top slab shall be broken back to provide a 320 mm minimum embedment of existing longitudinal reinforcing into the extension. Alternatively, if the fill height is greater than 0.6 m, the existing curb may be left in place and 600 mm long #6 bars shall be drilled and grouted 300 mm into the existing top slab at 450 mm center to center spacing. Wings and apron shall be broken back as necessary to install the extension. Exposed wingwall and apron reinforcing may be removed or cleaned and included in the extension. When lengthening existing box culverts with dimensions different than current standard dimensions, horizontal and vertical transitions shall be formed as directed by the Engineer. Bottom slabs shall match to maintain an uninterrupted flow line. Existing and new reinforcing shall be field bent into transition maintaining specified cover requirements. For direct traffic culverts, the "H" dimension may be adjusted to provide a smooth riding surface.

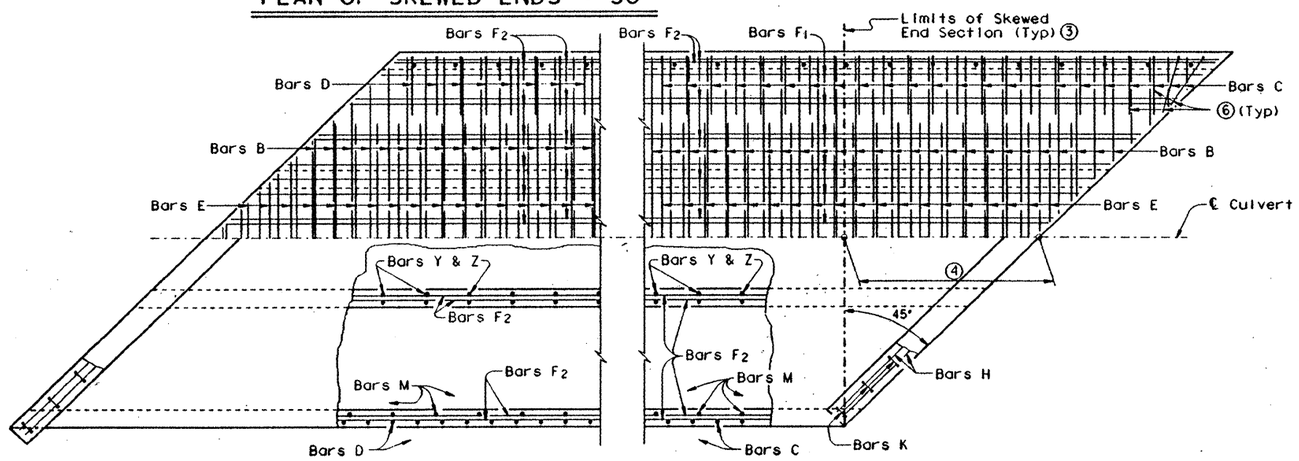

PLAN OF SKEWED ENDS ~ 45°

② When the spacing between Bars B becomes less than half of the normal spacing, bars shall be cut to avoid fouling

③ The length of Bars B and E will vary in the skewed end sections

④ [One half of overall width] x [Tan of the skew angle]

⑤ Bars F_1 and F_2 shall be continuous through the angle section. They shall be bent to remain parallel to the walls of the Box Culvert.

⑥ When necessary to avoid fouling in acute corners, the slab extension leg of Bars C and Bars D may be shortened to a minimum of 450 mm for skews of 30° and 45°.

GENERAL NOTES:

Designed according to current AASHTO Standard Specifications.

All reinforcing steel shall be Grade 420 (fy = 420 MPa).

All concrete shall have a minimum 28 day compressive strength of 25 MPa.

Refer to Multiple Box Culverts standard for details of straight sections of culvert. For skewed sections and angle sections refer to Multiple Box Culverts standard for slab and wall dimensions, bar sizes, maximum bar spacing, and any other details not shown.

Texas Department of Transportation
Design Division (Bridge)

MULTIPLE BOX CULVERTS MISCELLANEOUS DETAILS

MC-MD (M)

FILE: mc-mdstd.dgn	DN: KLR	CK: KRP	DW: MCB	CK: KLR	STD: B6OM
ORIG DATE: JANUARY 1997	DIST 15	FED REG 6	FEDERAL AID PROJECT		SHEET 242
REVISIONS	COUNTY BEXAR		CONTROL	SECT	JOB / HIGHWAY 1604

DISCLAIMER:
The use of this standard is governed by the "Texas Engineering Practice Act". No warranty of any kind is made by TxDOT for any purpose whatsoever. TxDOT assumes no responsibility for the conversion of this standard to other formats or for incorrect results or damages resulting from its use.

LEVELS DISPLAYED 1 3 ACC: (LV=1,3 for Metric)

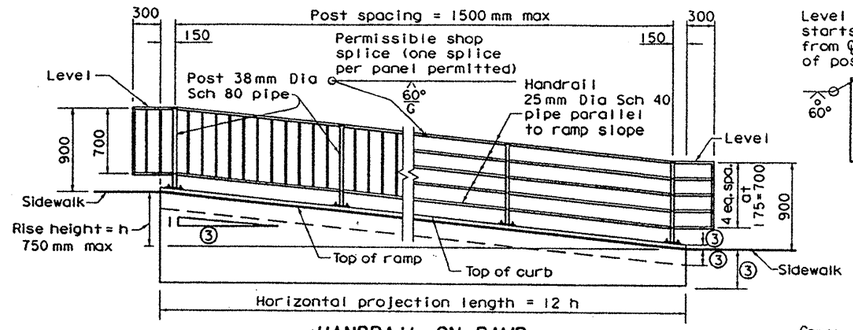

HANDRAIL ON RAMP

(Used where ramp or sidewalk is more than 750mm above adjacent surface.)

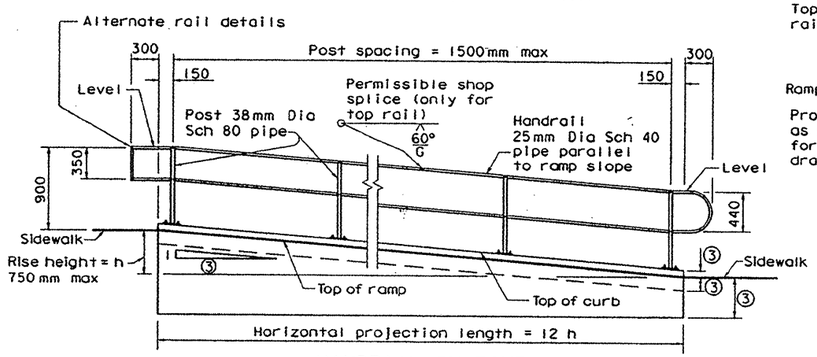

HANDRAIL ON RAMP

(Used in single-level ramp or lowest part in multi-level ramp.)

③ See Ramp Details, located elsewhere in plans, for ramp slope and dimensions.

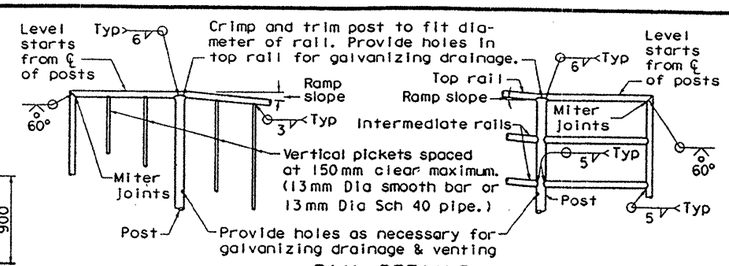

RAIL DETAILS

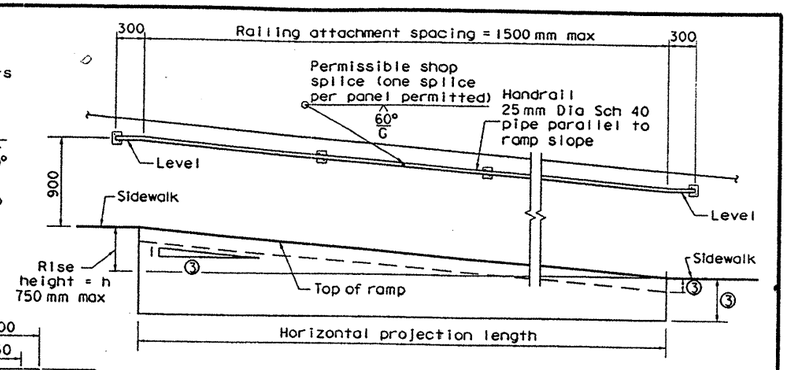

HANDRAIL ON WALL

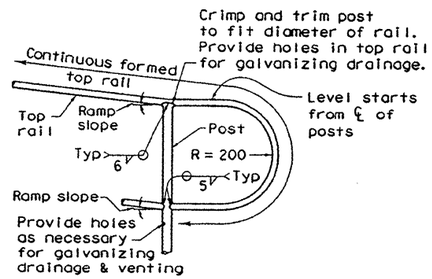

RAIL DETAILS

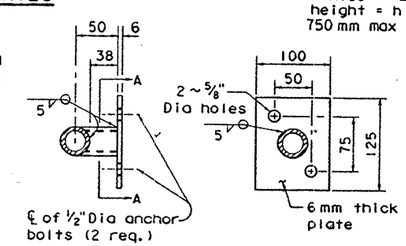

WALL MOUNT DETAILS

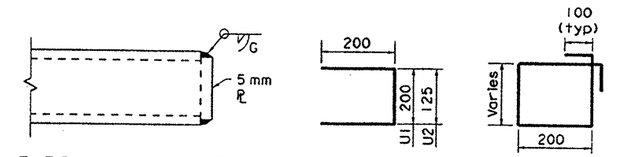

PIPE END DETAILS — BARS U (#4) — BARS S (#4)

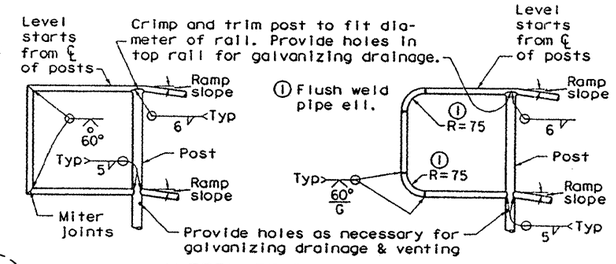

ALTERNATE RAIL DETAILS

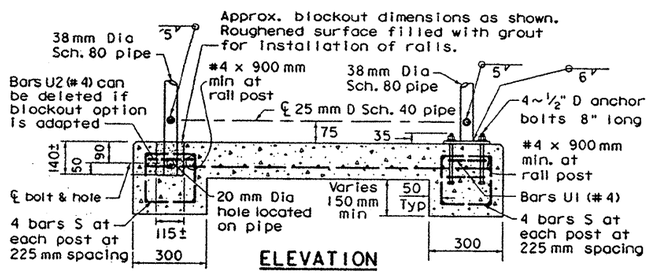

ELEVATION

Rail posts, may be cast into sidewalk or anchored in blockout after sidewalk concrete has cured.

OPTIONAL RAIL POST WITHOUT CURB

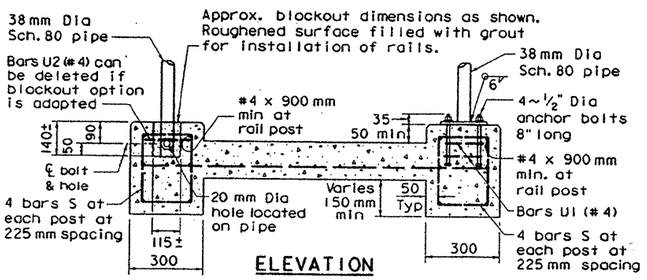

ELEVATION

Rail posts, may be cast into sidewalk or anchored in blockout after sidewalk concrete has cured.

RAIL POST WITH CURB

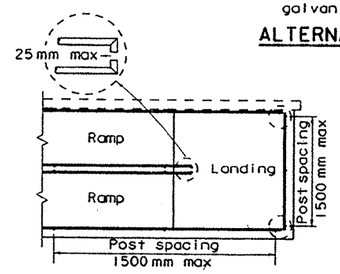

PLAN

MULTI-LEVEL RAMP

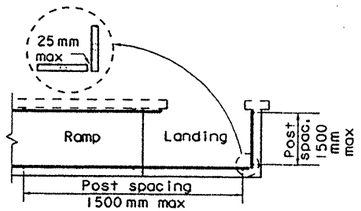

PLAN

SINGLE-LEVEL RAMP

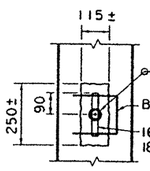

EMBEDDED POST ANCHOR

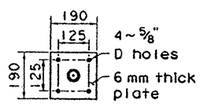

BASE PLATE DETAILS

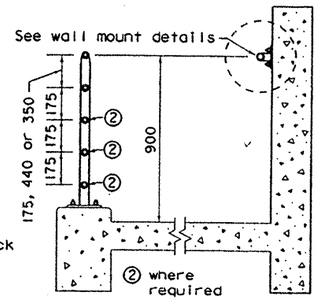

COMBINATION OF HANDRAIL ON WALL AND RAMP

GENERAL NOTES:

Design conforms to Texas Accessibility Standards and AASHTO 1993 Standard and current Interim Specifications.

See Sidewalk and Ramp details for ramp slope, dimensions and typical concrete and reinforcing steel. This sheet shows additional reinforcing steel required for handrail only.

Material for posts and handrails shall be ASTM A53 Gr B, or A501. Base plates shall be A36. All parts shall be galvanized in accordance with the specifications.

Square tubing of equivalent outside dimensions and strength may be substituted for the round shapes shown, as directed by the Engineer.

Anchor bolts for handrails attached to the wall shall be placed using an adhesive doweling system approved by the Engineer. Anchor bolts shall have an allowable capacity of 10.68 kN in tension and 10.23 kN in shear. Installation of the anchor bolts, including hole depth and diameter, shall be in accordance with the manufacturer's recommendation. If required by the Engineer, 3 of the first 10 anchors, and 5% of the remaining anchors shall be tested to 70% of minimum specified capacity. The contractor shall provide a suitable ram, pump, pressure gauge and reaction system.

Anchor bolts for posts attached on the ramps shall conform to ASTM A36 or approved equal. Nuts for anchor bolts shall conform to ASTM A563 Gr A or better heavy hex. Threads for anchor bolts and nuts shall be rolled or cut threads of unified national coarse (UNC) thread series. Bolts and nuts shall have class 2A and 2B fit tolerances. Anchor bolts and exposed nuts shall be galvanized or coated with zinc-rich paint. Washers shall be galvanized. Anchor bolts in ramp and sidewalk may be anchored using a drill and grout system.

Exposed edges of handrail and handrail posts shall be rounded or chamfered to approximately 3mm by grinding.

Anchor bolts, nuts and washers to be included in unit price bid for railing.

Erection drawings showing panel lengths, splice locations, rail post spacing and anchor bolts setting shall be submitted to the Engineer for approval.

R = Radius
D = Diameter

All unit-less dimensions are millimeters

Texas Department of Transportation
Design Division (Roadway)

RAMP HANDRAIL DETAILS

RHD-97 (M)

FILE: RHD97M.DGN	DN: JSY	CK:	DW: BR	CK:	NEG:	
ORIG DATE: MAY 1996	DIST	FED REG	[redacted]	PROJECT		SHEET
REVISIONS	15	6	CD 2452-1-35			243
	COUNTY		CONTROL	SECT	JOB	HIGHWAY
	BEXAR		2452	01	035	LIBBY

DISCLAIMER: Use of this standard is governed by the "Texas Engineering Practice Act". No warranty of any kind is made by TxDOT for any purpose whatsoever. TxDOT assumes no responsibility for the conversion of this standard to other formats or for incorrect results or damages resulting from its use.

LEVELS DISPLAYED

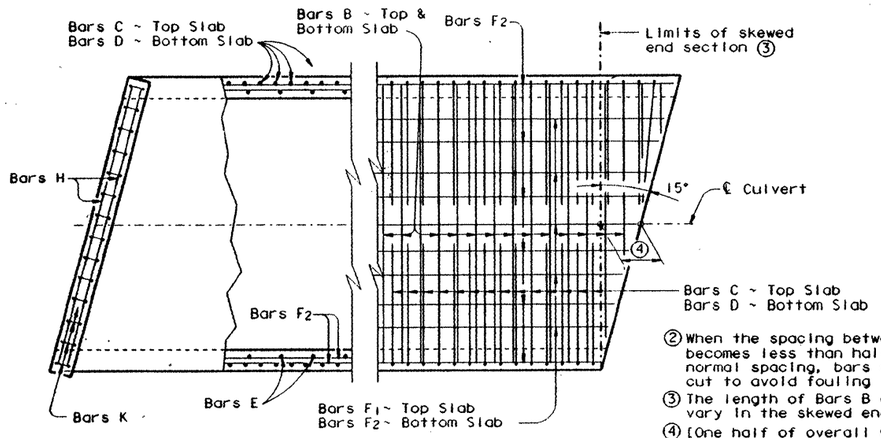

WALLS AND CURB SLAB

PLAN OF SKEWED ENDS ~ 15°

② When the spacing between Bars B becomes less than half of the normal spacing, bars shall be cut to avoid fouling

③ The length of Bars B and E will vary in the skewed end sections

④ [One half of overall width] x [Tan of the skew angle]

⑤ Bars F1 and F2 shall be continuous through the angle section. They shall be bent to remain parallel to the walls of the Box Culvert.

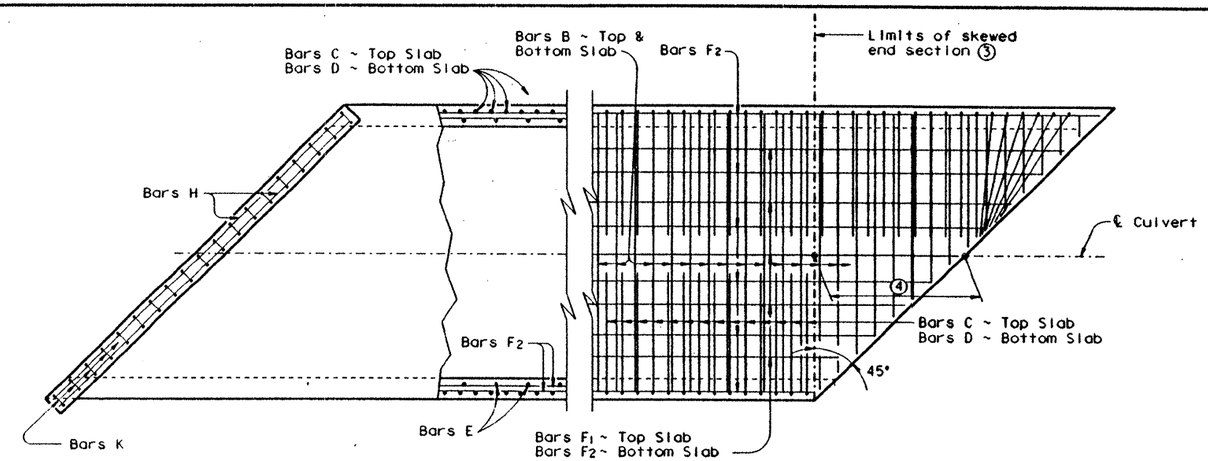

WALLS AND CURB SLAB

PLAN OF SKEWED ENDS ~ 45°

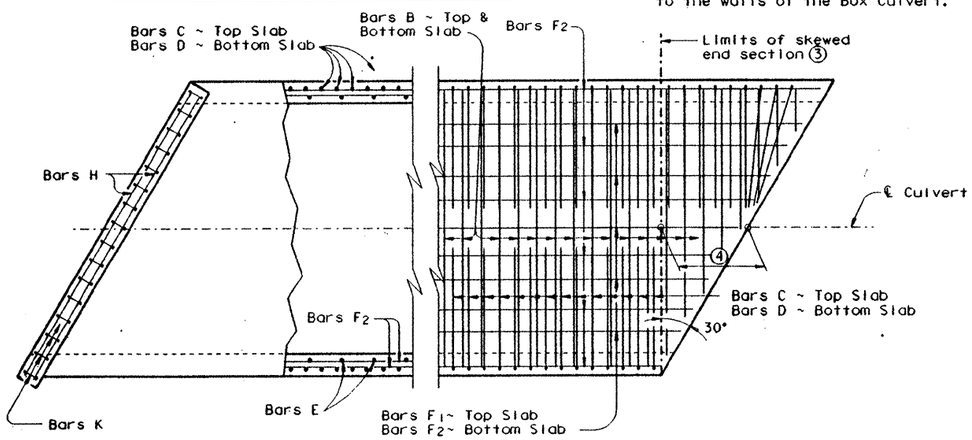

WALLS AND CURB SLAB

PLAN OF SKEWED ENDS ~ 30°

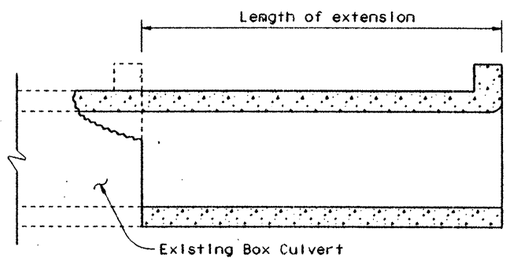

LENGTHENING DETAIL ①

① For box culverts with less than 0.6 m of fill, the top slab shall be broken back to provide a minimum 560 mm lap of the existing longitudinal bars with the longitudinal bars in the extension. If the depth of fill is 0.6 m or greater, the top slab shall be broken back to provide a 320 mm minimum embedment of existing longitudinal reinforcing into the extension. Alternatively, if the fill height is greater than 0.6 m, the existing curb may be left in place and 600 mm long #6 bars shall be drilled and grouted 300 mm into the existing top slab at 450 mm center to center spacing. Wings and apron shall be broken back as necessary to install the extension. Exposed wingwall and apron reinforcing may be removed or cleaned and included in the extension. When lengthening existing box culverts with dimensions different than current standard dimensions, horizontal and vertical transitions shall be formed as directed by the Engineer. Bottom slabs shall match to maintain an uninterrupted flow line. Existing and new reinforcing shall be field bent into transition maintaining specified cover requirements. For direct traffic culverts, the "H" dimension may be adjusted to provide a smooth riding surface.

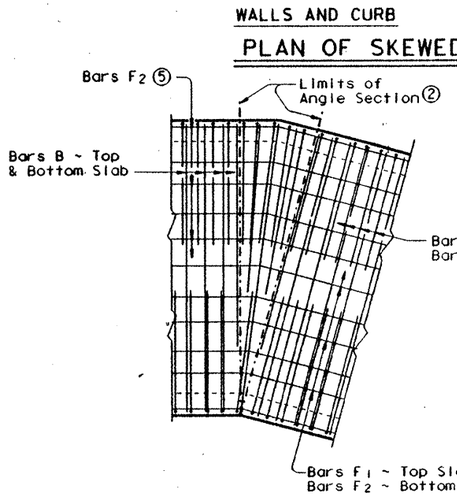

PLAN OF ANGLE SECTION ~ 15°

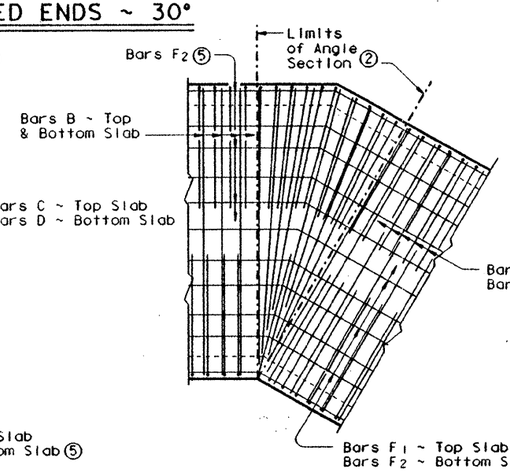

PLAN OF ANGLE SECTION ~ 30°

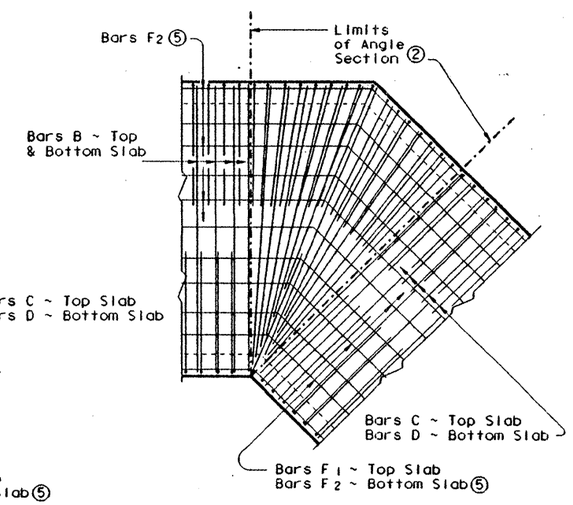

PLAN OF ANGLE SECTION ~ 45°

GENERAL NOTES:

Designed according to current AASHTO Standard Specifications.

All reinforcing steel shall be Grade 420 (fy = 420 MPa).

All concrete shall have a minimum 28 day compressive strength of 25 MPa.

Refer to Single Box Culverts Cast-in-Place standard for details of straight sections of culvert. For skewed sections and angle sections refer to Single Box Culverts Cast-in-Place standard for slab and wall dimensions, bar sizes, maximum bar spacing, and any other details not shown.

DISCLAIMER:
The use of this standard is governed by the "Texas Engineering Practice Act". No warranty of any kind is made by TxDOT for any purpose whatsoever. TxDOT assumes no responsibility for the conversion of this standard to other formats or for incorrect results or damages resulting from its use.

ACC: (LV=1,3 for Metric)
LEVELS DISPLAYED 1 13

Texas Department of Transportation
Design Division (Bridge)

SINGLE BOX CULVERTS CAST-IN-PLACE MISCELLANEOUS DETAILS

SCC-MD(M)

FILE: scandtd.dgn	DN: KLR	CK: KRP	DW: MCB	CK: KLR	STD: B38M
ORIG DATE: JANUARY 1997	DIST 15	FED REG 6	FEDERAL AID PROJECT		SHEET 244
REVISIONS	COUNTY BEXAR		CONTROL	SECT	JOB / HIGHWAY 1604

ESTIMATED QUANTITIES		
ITEM	UNIT	QTY.
REMOVE RDWY ILLUM. ASSEM	EA.	3

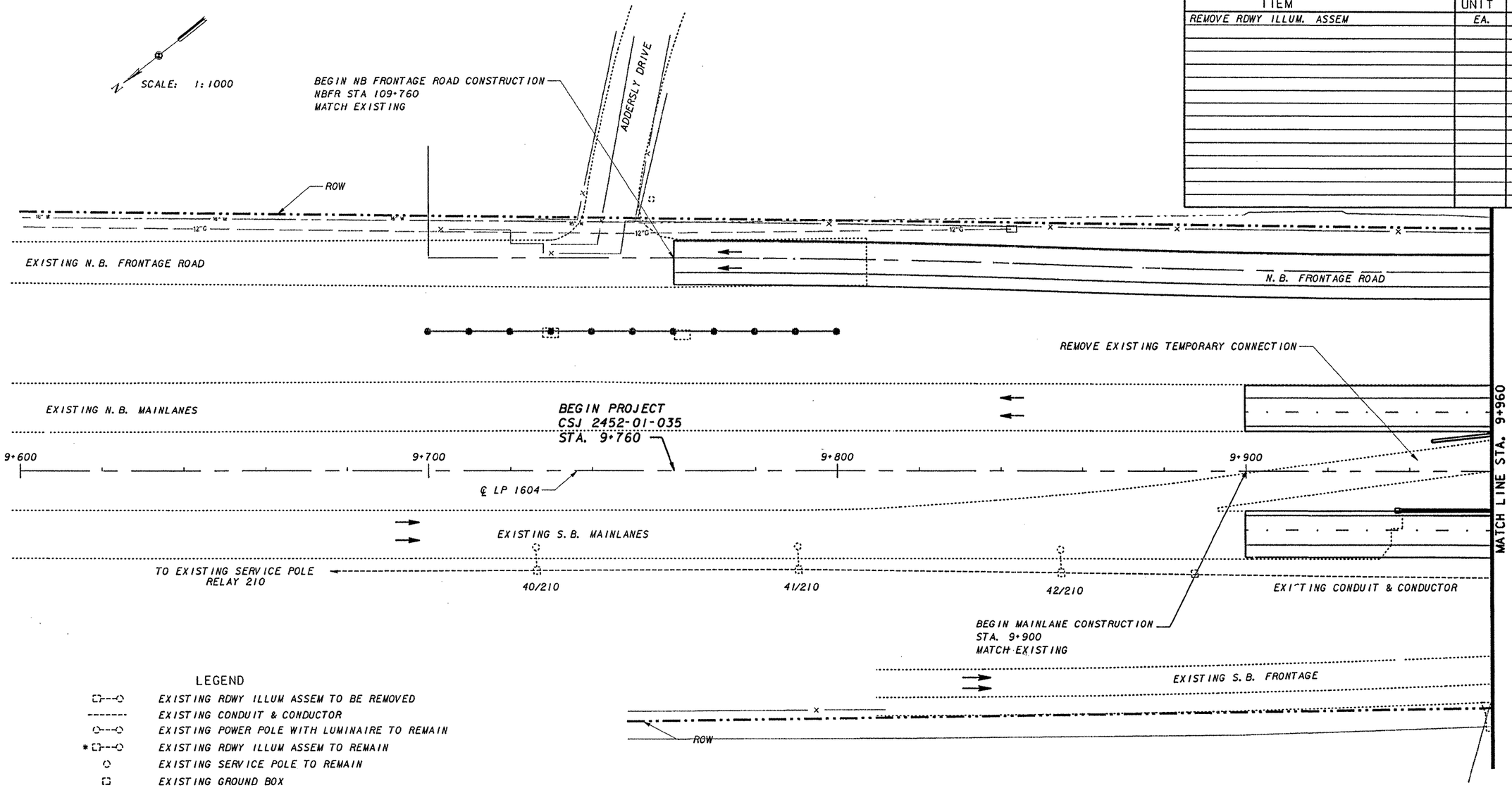

LEGEND

- EXISTING RDWY ILLUM ASSEM TO BE REMOVED
- EXISTING CONDUIT & CONDUCTOR
- EXISTING POWER POLE WITH LUMINAIRE TO REMAIN
- * EXISTING RDWY ILLUM ASSEM TO REMAIN
- EXISTING SERVICE POLE TO REMAIN
- EXISTING GROUND BOX
- RDWY ILLUM ASSEM (TY SA 12T3-3)(.25KW)S
- RDWY ILLUM ASSEM (TY SA 12T3)(.25KW)S
- RDWY ILLUM ASSEM (TY SA 15T3)(.4KW)S
- RDWY ILLUM ASSEM (TY SA 15T3-3)(.4KW)S
- GROUND BOX
- JUNCTION BOX
- PVC & CONDUCTOR (TRENCHED)
- RMC & CONDR (PUSH BORE)
- (2) CONDUIT RUN NUMBER
- XX/YYY LIGHT NUMBER/RELAY NUMBER
- DISCONNECT SWITCH
- ELECTRICAL SERVICE
- EXISTING POWER LINES

NOTE:
ALL STATIONING REFERENCED IS THAT ALONG THE ℄ OF LOOP 1604

NO.	DATE	REVISION	APPROV.

Texas Department of Transportation
LOOP 1604

ILLUMINATION PLAN SHEET
BEGIN PROJECT TO STA. 9+960

1 OF 11

STATE OF TEXAS
BRENT L. CHRISTIAN
73921
REGISTERED
PROFESSIONAL ENGINEER
Brent L. Christian
6/16/97

Kimley-Horn and Associates, Inc.

Designed	JJ	DIST	FED REG	FEDERAL AID PROJECT				HIGHWAY
Checked	BLC	15	6					LP1604
Drawn	HP	COUNTY		CONTROL	SECT	JOB		SHEET
Checked	JJ	BEXAR		2452	01	035		245

LEVELS DISPLAYED

1	2	3	4	5	6	7	8	9	10	11	12	13	14	15	16	17	18	19	20	21	22	23	24	25	26	27	28	29	30	31	32
33	34	35	36	37	38	39	40	41	42	43	44	45	46	47	48	49	50	51	52	53	54	55	56								

H:\DRAWINGS\673603\ILLUM\604LPD01.DGN

ESTIMATED QUANTITIES		
ITEM	UNIT	QTY.
REMOVE RDWY ILLUM ASSEM	EA	4
RDWY ILLUM ASSEM (TY SA 12T3-3)(.25KW)S	EA	3
CONDUIT (PVC)(SCH 40)(32MM)	M	381
CONDUIT (RM)(PUSH BORE)(50MM)	M	13
GROUND BOX	EA	3
CONDUCTOR (NO. 8) BARE	M	394
CONDUCTOR (NO. 8) INSULATED	M	788
Fnd for Rdwy Ill Asn (Ty A) (750 MM D.S.)	M	5.487 ≠

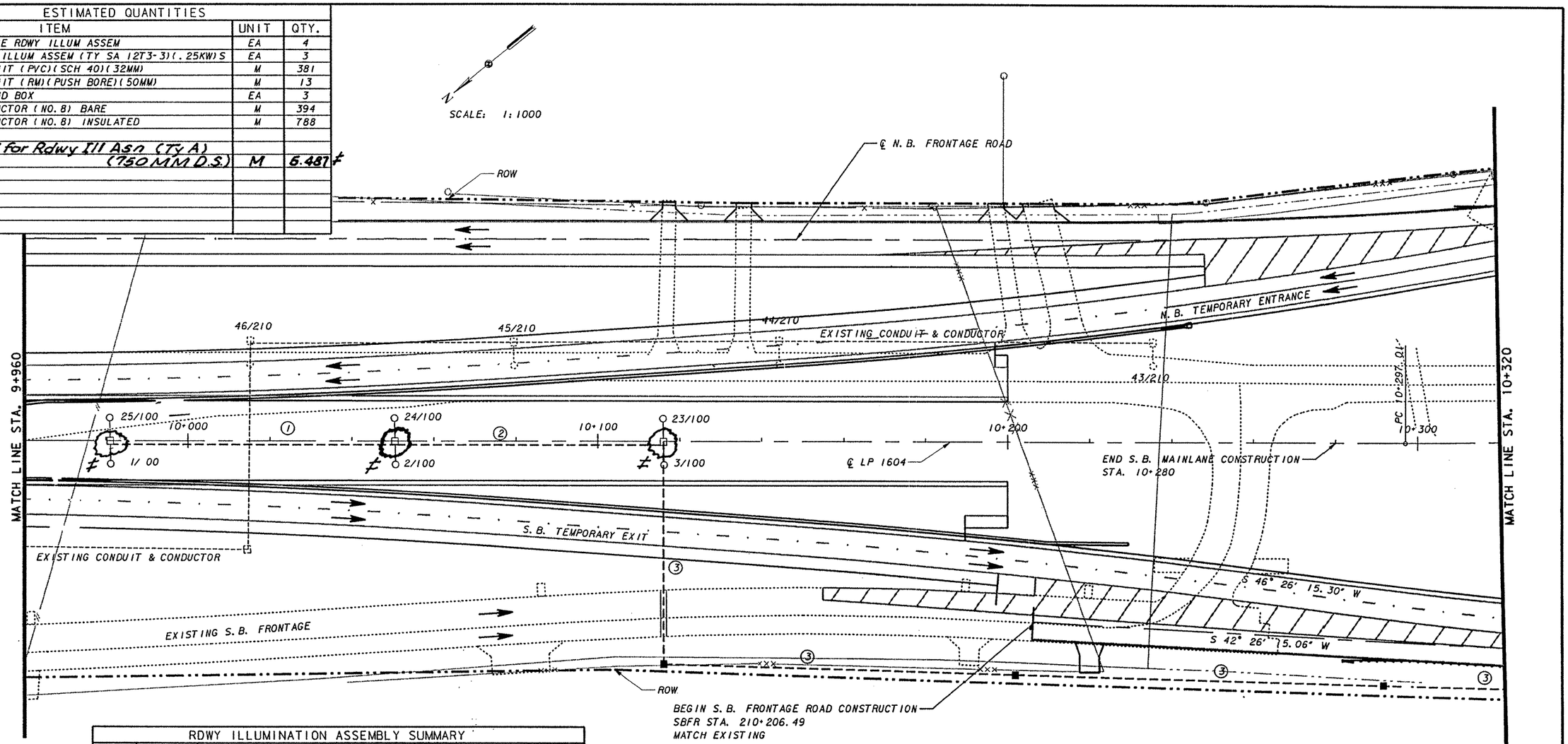

RDWY ILLUMINATION ASSEMBLY SUMMARY			
POLE	STATION	TYPE	REMARKS
1/25	9+982	(TY SA 12T3-3)(.25KW)S	OFFSET=0
2/24	10+049	(TY SA 12T3-3)(.25KW)S	OFFSET=0
3/23	10+116	(TY SA 12T3-3)(.25KW)S	OFFSET=0
	+		
	+		

CONDUIT & CONDUCTOR SUMMARY							
	GROUND LENGTH (M)		CONDUCTOR LENGTH (M)		CONDUIT (M)		
RUN	#6 BARE		#6 INSUL.		32mm PVC SCH 40	50mm PVC BORED	REMARKS
1	-67	-	2-67	-	67		
2	1-67	-	2-67	-	67		
3	1-260	-	2-260	-	247	13	
TOTAL	394		788		381	13	

LEGEND

- EXISTING RDWY ILLUM ASSEM TO BE REMOVED
- EXISTING CONDUIT & CONDUCTOR
- EXISTING POWER POLE WITH LUMINAIRE TO REMAIN
- EXISTING RDWY ILLUM ASSEM TO REMAIN
- EXISTING SERVICE POLE TO REMAIN
- EXISTING GROUND BOX
- RDWY ILLUM ASSEM (TY SA 12T3-3)(.25KW)S
- RDWY ILLUM ASSEM (TY SA 12T3)(.25KW)S
- RDWY ILLUM ASSEM (TY SA 15T3)(.4KW)S
- RDWY ILLUM ASSEM (TY SA 15T3-3)(.4KW)S
- GROUND BOX
- JUNCTION BOX
- PVC & CONDUCTOR (TRENCHED)
- RMC & CONDR (PUSH BORE)
- ② CONDUIT RUN NUMBER
- XX/YYY LIGHT NUMBER/RELAY NUMBER
- DISCONNECT SWITCH
- ELECTRICAL SERVICE
- EXISTING POWER LINES

NOTE: ALL STATIONING REFERENCED IS THAT ALONG THE ℄ OF LOOP 1604

STATE OF TEXAS GREGG A. BLAKE REGISTERED PROFESSIONAL ENGINEER 6/16/97

STATE OF TEXAS BRENT L. CHRISTIAN 73921 REGISTERED PROFESSIONAL ENGINEER

for (≠ CHANGE ORDER NO. 8) Brent L. Christian 6/16/97

NO.	DATE	REVISION	APPROV.

Texas Department of Transportation
LOOP 1604

ILLUMINATION PLAN SHEET
STA. 9+960 TO STA. 10+320

2 OF 11

Kimley-Horn and Associates, Inc.

Designed	JJ	DIST	FED REG	FEDERAL AID PROJECT			HIGHWAY
Checked	BLC	15	6				LP1604
Drawn	HP	COUNTY		CONTROL	SECT	JOB	SHEET
Checked	JJ	BEXAR		2452	01	035	246

LEVELS DISPLAYED

H:\DRAWINGS\6731603\ILLUM\604LPD02.DGN

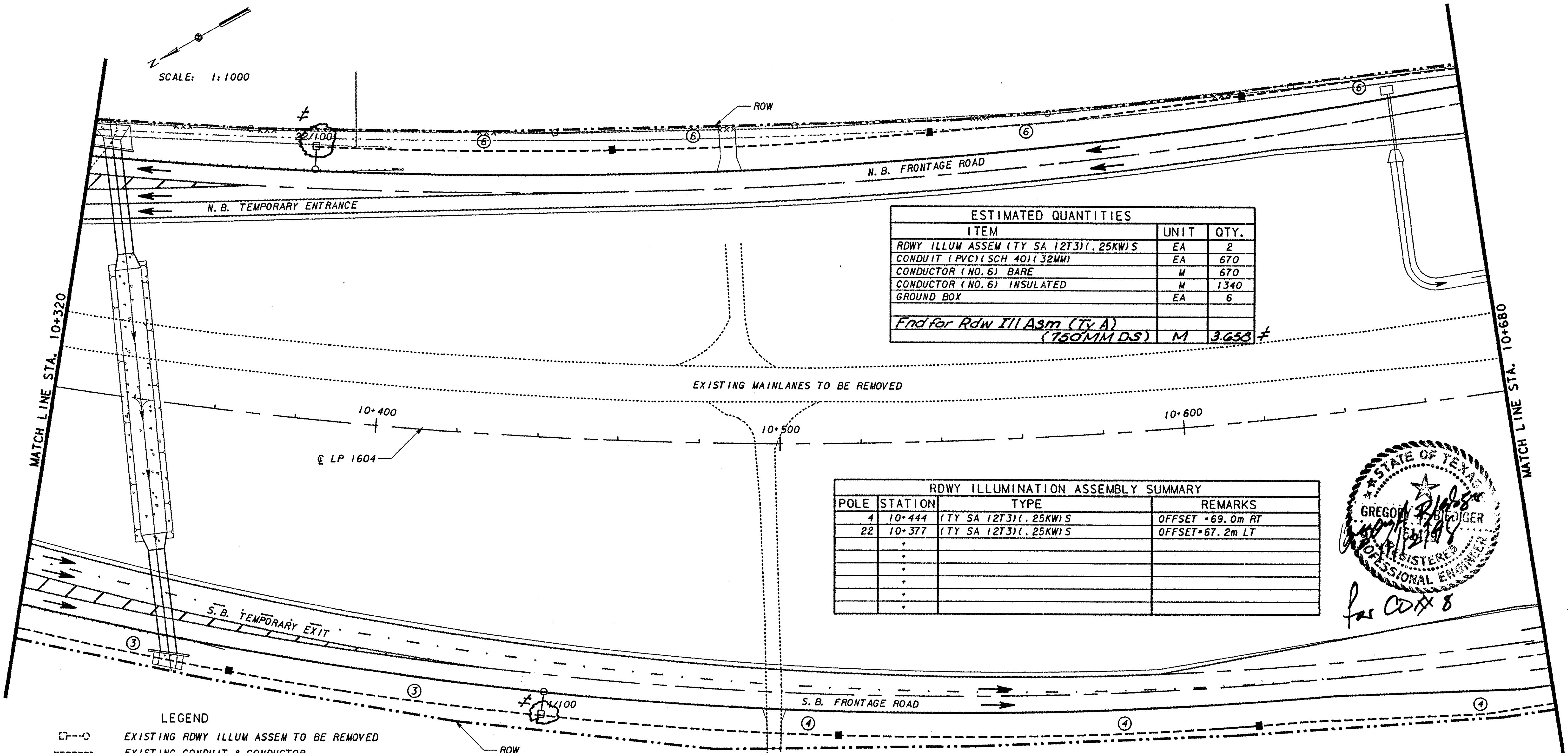

ESTIMATED QUANTITIES		
ITEM	UNIT	QTY.
RDWY ILLUM ASSEM (TY SA 12T3)(.25KW)S	EA	2
CONDUIT (PVC)(SCH 40)(32MM)	EA	670
CONDUCTOR (NO.6) BARE	M	670
CONDUCTOR (NO.6) INSULATED	M	1340
GROUND BOX	EA	6
Fnd for Rdw Ill Asm (Ty A) (750MM DS)	M	3.658 ≠

RDWY ILLUMINATION ASSEMBLY SUMMARY			
POLE	STATION	TYPE	REMARKS
4	10+444	(TY SA 12T3)(.25KW)S	OFFSET =69.0m RT
22	10+377	(TY SA 12T3)(.25KW)S	OFFSET=67.2m LT
	+		
	+		
	+		
	+		
	+		
	+		

STATE OF TEXAS
GREGORY R. BIEDIGER
REGISTERED PROFESSIONAL ENGINEER
Gregory R. Biediger 1/12/98
for CO # 8

LEGEND

⌑--○	EXISTING RDWY ILLUM ASSEM TO BE REMOVED
-------	EXISTING CONDUIT & CONDUCTOR
○--○	EXISTING POWER POLE WITH LUMINAIRE TO REMAIN
* ⌑--○	EXISTING RDWY ILLUM ASSEM TO REMAIN
○	EXISTING SERVICE POLE TO REMAIN
⌑	EXISTING GROUND BOX
○—□—○	RDWY ILLUM ASSEM (TY SA 12T3-3)(.25KW)S
□—○	RDWY ILLUM ASSEM (TY SA 12T3)(.25KW)S
■—●	RDWY ILLUM ASSEM (TY SA 15T3)(.4KW)S
●—■—●	RDWY ILLUM ASSEM (TY SA 15T3-3)(.4KW)S
■	GROUND BOX
⊠	JUNCTION BOX
— — — —	PVC & CONDUCTOR (TRENCHED)
═══	RMC & CONDR (PUSH BORE)
②	CONDUIT RUN NUMBER
XX/YYY	LIGHT NUMBER/RELAY NUMBER
□✓	DISCONNECT SWITCH
⬡	ELECTRICAL SERVICE
—— · · ——	EXISTING POWER LINES

NOTE: ALL STATIONING REFERENCED IS THAT ALONG THE ℄ OF LOOP 1604

CONDUIT & CONDUCTOR SUMMARY								
	GROUND LENGTH (M)		CONDUCTOR LENGTH (M)		CONDUIT (M)			
RUN	#6 BARE		#6 INSUL.		32mm PVC SCH 40	50mm PVC BORED		REMARKS
3	1-132	-	2-132		132			
4	1-252	-	2-252		252			
6	1-286	-	2-286		286			
TOTAL	670		1340		670			

(≠ CHANGE ORDER NO. 8)

STATE OF TEXAS
BRENT L. CHRISTIAN
73921
REGISTERED PROFESSIONAL ENGINEER
Brent L. Christian
6/16/97

NO.	DATE	REVISION	APPROV.

Texas Department of Transportation
LOOP 1604

ILLUMINATION PLAN SHEET
STA. 10+320 TO STA. 10+680

3 OF 11

Kimley-Horn and Associates, Inc.

Designed	JJ	DIST	FED REG	FEDERAL AID PROJECT •				HIGHWAY
Checked	BLC	15	6					LP1604
Drawn	HP	COUNTY			CONTROL	SECT	JOB	SHEET
Checked	JJ	BEXAR			2452	01	035	247

H:\DRAWINGS\6731603\ILLUM604LPD03.DGN

LEVELS DISPLAYED															
1	2	3	4	5	6	7	8	9	10	11	12	13	14	15	16
17	18	19	20	21	22	23	24	25	26	27	28	29	30	31	32
33	34	35	36	37	38	39	40	41	42	43	44	45	46	47	48
49	50	51	52	53	54	55	56	57	58	59	60	61	62	63	

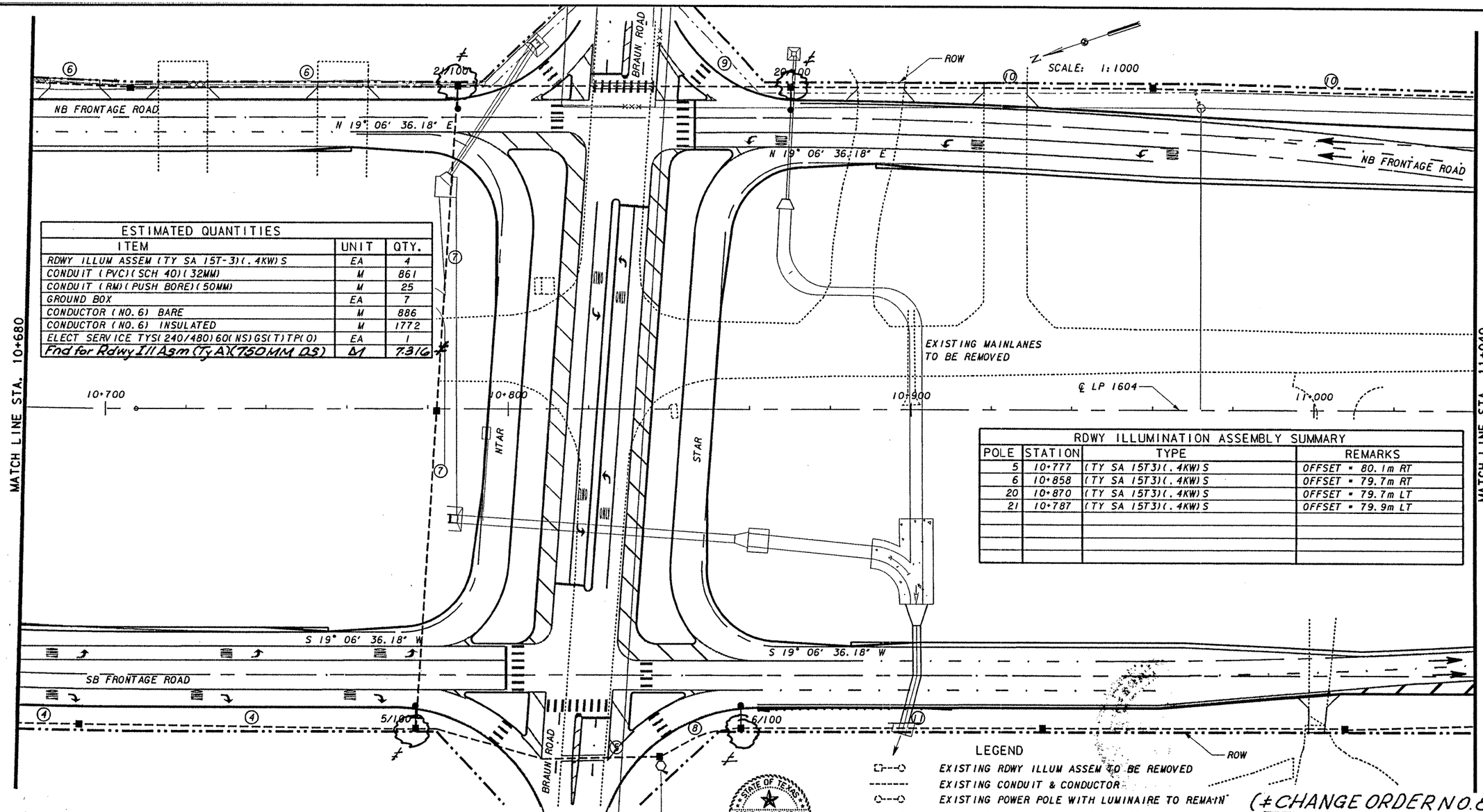

ESTIMATED QUANTITIES		
ITEM	UNIT	QTY.
RDWY ILLUM ASSEM (TY SA 15T-3)(.4KW)S	EA	4
CONDUIT (PVC)(SCH 40)(32MM)	M	861
CONDUIT (RM)(PUSH BORE)(50MM)	M	25
GROUND BOX	EA	7
CONDUCTOR (NO.6) BARE	M	886
CONDUCTOR (NO.6) INSULATED	M	1772
ELECT SERVICE TYS(240/480)60(NS)GS(T)TP(O)	EA	1
Fnd for Rdwy Ill Asm (Ty A)(750MM OS)	M	7.316 ≠

RDWY ILLUMINATION ASSEMBLY SUMMARY			
POLE	STATION	TYPE	REMARKS
5	10+777	(TY SA 15T3)(.4KW)S	OFFSET = 80.1m RT
6	10+858	(TY SA 15T3)(.4KW)S	OFFSET = 79.7m RT
20	10+870	(TY SA 15T3)(.4KW)S	OFFSET = 79.7m LT
21	10+787	(TY SA 15T3)(.4KW)S	OFFSET = 79.9m LT

CONDUIT & CONDUCTOR SUMMARY							
	GROUND LENGTH (M)		CONDUCTOR LENGTH (M)		CONDUIT (M)		
RUN	#6 BARE		#6 INSUL.		32mm PVC SCH 40	50mm PVC BORED	REMARKS
4	1-100	-	2-100	-	100		
5	1-62	-	2-62	-	54	8	
6	1-106	-	2-106	-	106		
7	1-160	-	2-160	-	160		
8	1-22	-	2-22	-	22		
9	1-82	-	2-82	-	65	17	
10	1-171	-	2-171	-	171		
11	1-183		2-183		183		
TOTAL	886		1772		861	25	

ELECT. SERVICE TY S
240/480 THREE WIRE
PHOTO ELECTRIC CONTROL
RELAY 100-13 LIGHTS

RELAY 100
4 @ 1.2 AMPS — 12.3 AMPS
10 @ .75 AMPS — 19.8 IR DROP
4.0%

NOTE: ALL STATIONING REFERENCED IS THAT ALONG THE ℄ OF LOOP 1604

LEGEND

- EXISTING RDWY ILLUM ASSEM TO BE REMOVED
- EXISTING CONDUIT & CONDUCTOR
- EXISTING POWER POLE WITH LUMINAIRE TO REMAIN
- * EXISTING RDWY ILLUM ASSEM TO REMAIN
- EXISTING SERVICE POLE TO REMAIN
- EXISTING GROUND BOX
- RDWY ILLUM ASSEM (TY SA 12T3-3)(.25KW)S
- RDWY ILLUM ASSEM (TY SA 12T3)(.25KW)S
- RDWY ILLUM ASSEM (TY SA 15T3)(.4KW)S
- RDWY ILLUM ASSEM (TY SA 15T3-3)(.4KW)S
- GROUND BOX
- JUNCTION BOX
- PVC & CONDUCTOR (TRENCHED)
- RMC & CONDR (PUSH BORE)
- (2) CONDUIT RUN NUMBER
- XX/YYY LIGHT NUMBER/RELAY NUMBER
- DISCONNECT SWITCH
- ELECTRICAL SERVICE
- EXISTING POWER LINES

STATE OF TEXAS — BRENT L. CHRISTIAN — 73921 — REGISTERED PROFESSIONAL ENGINEER
Brent L. Christian 6/16/97

STATE OF TEXAS — GREGORY A. BIEDIGER — REGISTERED PROFESSIONAL ENGINEER
11/12/98
for CO #8

NO.	DATE	REVISION	APPROV.

Texas Department of Transportation
LOOP 1604

ILLUMINATION PLAN SHEET
STA. 10+680 TO 11+040
4 OF 11

Kimley-Horn and Associates, Inc.

Designed	JJ	DIST	FED REG	FEDERAL AID PROJECT		HIGHWAY
Checked	BLC	15	6			LP1604
Drawn	HP	COUNTY		CONTROL	SECT	JOB	SHEET
Checked	JJ	BEXAR		2452	01	035	248

LEVELS DISPLAYED
1 2 3 4 5 6 7 8 9 10 11 12 13 14 15 16
17 18 19 20 21 22 23 24 25 26 27 28 29 30 31 32
33 34 35 36 37 38 39 40 41 42 43 44 45 46 47 48
49 50 51 52 53 54 55 56 57 58 59 60 61 62 63

H:\DRAWINGS\673\603\ILLUM604LPD04.DGN

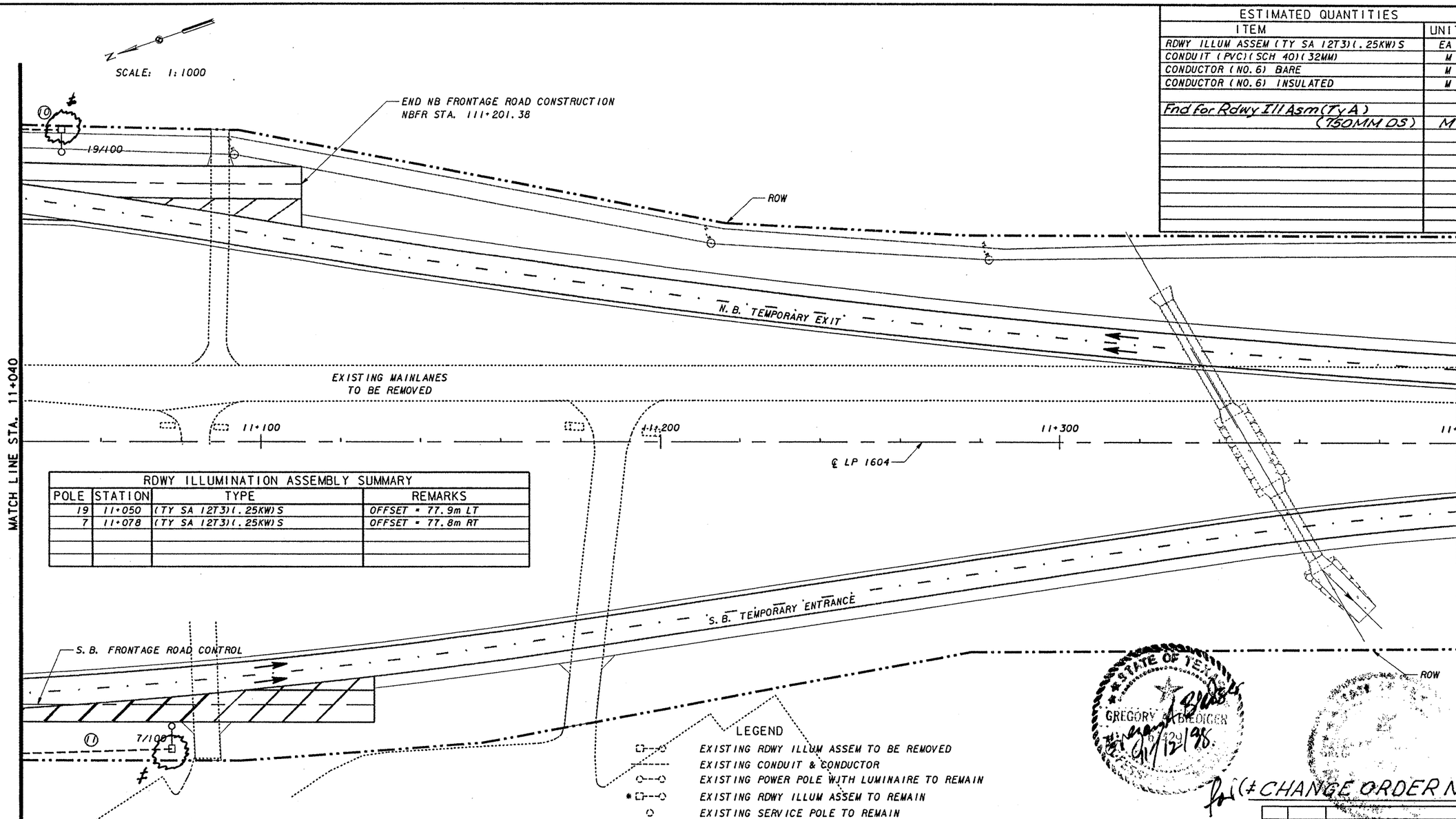

ESTIMATED QUANTITIES		
ITEM	UNIT	QTY.
RDWY ILLUM ASSEM (TY SA 12T3)(.25KW)S	EA	2
CONDUIT (PVC)(SCH 40)(32MM)	M	48
CONDUCTOR (NO. 6) BARE	M	48
CONDUCTOR (NO. 6) INSULATED	M	96
Fnd for Rdwy Ill Asm (Ty A) (750MM DS)	M	3.658 ≠

RDWY ILLUMINATION ASSEMBLY SUMMARY			
POLE	STATION	TYPE	REMARKS
19	11+050	(TY SA 12T3)(.25KW)S	OFFSET = 77.9m LT
7	11+078	(TY SA 12T3)(.25KW)S	OFFSET = 77.8m RT

LEGEND

- EXISTING RDWY ILLUM ASSEM TO BE REMOVED
- EXISTING CONDUIT & CONDUCTOR
- EXISTING POWER POLE WITH LUMINAIRE TO REMAIN
- EXISTING RDWY ILLUM ASSEM TO REMAIN
- EXISTING SERVICE POLE TO REMAIN
- EXISTING GROUND BOX
- RDWY ILLUM ASSEM (TY SA 12T3-3)(.25KW)S
- RDWY ILLUM ASSEM (TY SA 12T3)(.25KW)S
- RDWY ILLUM ASSEM (TY SA 15T3)(.4KW)S
- RDWY ILLUM ASSEM (TY SA 15T3-3)(.4KW)S
- GROUND BOX
- JUNCTION BOX
- PVC & CONDUCTOR (TRENCHED)
- RMC & CONDR (PUSH BORE)
- ② CONDUIT RUN NUMBER
- XX/YYY LIGHT NUMBER/RELAY NUMBER
- DISCONNECT SWITCH
- ELECTRICAL SERVICE
- EXISTING POWER LINES

NOTE: ALL STATIONING REFERENCED IS THAT ALONG THE ℄ OF LOOP 1604

CONDUIT & CONDUCTOR SUMMARY							
	GROUND LENGTH (M)		CONDUCTOR LENGTH (M)		CONDUIT (M)		
RUN	#6 BARE		#6 INSUL.		32mm PVC SCH 40	50mm PVC BORED	REMARKS
10	1-9	-	2-9	-	9		
11	1-39	-	2-39	-	39		
TOTAL	48		96		48		

STATE OF TEXAS
GREGORY A. BIEDIGER
6/12/98

for (≠ CHANGE ORDER NO. 8)

STATE OF TEXAS
BRENT L. CHRISTIAN
73921
REGISTERED PROFESSIONAL ENGINEER

Brent L. Christian
6/16/97

NO.	DATE	REVISION	APPROV.

Texas Department of Transportation
LOOP 1604

ILLUMINATION PLAN SHEET
STA. 11+040 TO STA. 11+400

5 OF 11

Kimley-Horn and Associates, Inc.

Designed JJ	DIST	FED REG	FEDERAL AID PROJECT	HIGHWAY
Checked BLC	15	6		LP1604
Drawn HP	COUNTY		CONTROL SECT JOB	SHEET
Checked JJ	BEXAR		2452 01 035	249

H:\DRAWINGS\6731603\ILLUM\604LPD05.DGN

LEVELS DISPLAYED

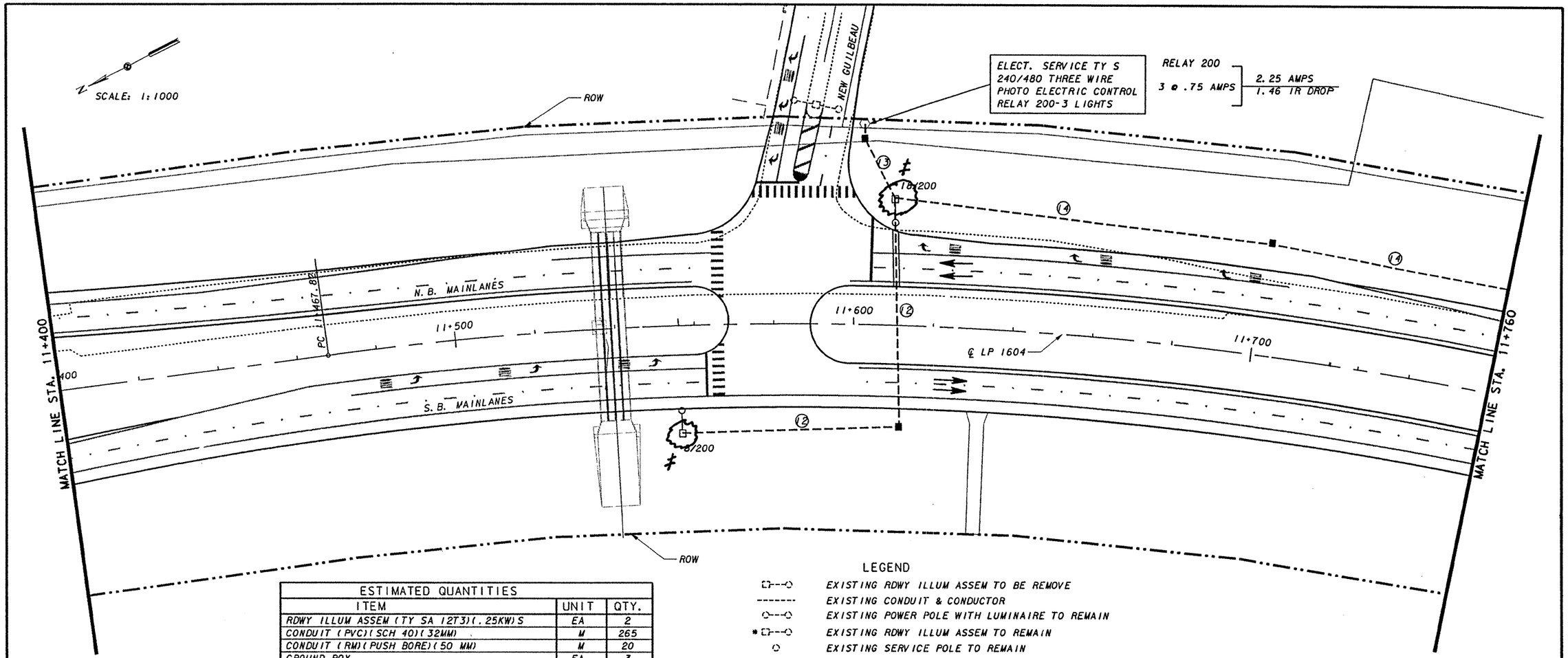

ESTIMATED QUANTITIES		
ITEM	UNIT	QTY.
RDWY ILLUM ASSEM (TY SA 12T3)(.25KW)S	EA	2
CONDUIT (PVC)(SCH 40)(32MM)	M	265
CONDUIT (RM)(PUSH BORE)(50 MM)	M	20
GROUND BOX	EA	3
CONDUCTOR (NO.6) BARE	M	285
CONDUCTOR (NO.6) INSULATED	M	570
ELECT. SERV. TYS(240/480)40(NS)GS(T)TP(0)	EA	1
End for Rdwy Ill Asm (Ty A) (750MM OS)	M	3.658 ≠

LEGEND

- EXISTING RDWY ILLUM ASSEM TO BE REMOVE
- EXISTING CONDUIT & CONDUCTOR
- EXISTING POWER POLE WITH LUMINAIRE TO REMAIN
- * EXISTING RDWY ILLUM ASSEM TO REMAIN
- EXISTING SERVICE POLE TO REMAIN
- EXISTING GROUND BOX
- RDWY ILLUM ASSEM (TY SA 12T3-3)(.25KW)S
- RDWY ILLUM ASSEM (TY SA 12T3)(.25KW)S
- RDWY ILLUM ASSEM (TY SA 15T3)(.4KW)S
- RDWY ILLUM ASSEM (TY SA 15T3-3)(.4KW)S
- GROUND BOX
- JUNCTION BOX
- PVC & CONDUCTOR (TRENCHED)
- RMC & CONDR (PUSH BORE)
- (2) CONDUIT RUN NUMBER
- XX/YYY LIGHT NUMBER/RELAY NUMBER
- DISCONNECT SWITCH
- ELECTRICAL SERVICE
- EXISTING POWER LINES

NOTE: ALL STATIONING REFERENCED IS THAT ALONG THE ℄ OF LOOP 1604

STATE OF TEXAS — BRENT L. CHRISTIAN 73921 — REGISTERED PROFESSIONAL ENGINEER
6/16/97

STATE OF TEXAS — GREGORY T. GLEDIGER 61429 — REGISTERED PROFESSIONAL ENGINEER
6/12/98

for (≠ CHANGE ORDER NO.8)

CONDUIT & CONDUCTOR SUMMARY							
	GROUND LENGTH (M)		CONDUCTOR LENGTH (M)		CONDUIT (M)		
RUN	#6 BARE		#6 INSUL.		32mm PVC SCH 40	50mm PVC BORED	REMARKS
12	1-109		2-109		89	20	
13	1-20		2-20		20		
14	1-156		2-156		156		
TOTAL	285		570		265	20	

RDWY ILLUMINATION ASSEMBLY SUMMARY			
POLE	STATION	TYPE	REMARKS
8	11+556	(TY SA 12T3)(.25KW)S	OFFSET = 27.2m RT
18	11+610	(TY SA 12T3)(.25KW)S	OFFSET = 31.6m LT

Texas Department of Transportation
LOOP 1604

ILLUMINATION PLAN SHEET
STA. 11+400 TO STA. 11+760

6 OF 11

Kimley-Horn and Associates, Inc.

Designed JJ	DIST	FED REG	FEDERAL AID PROJECT		HIGHWAY
Checked BLC	15	6			LP1604
Drawn HP	COUNTY		CONTROL	SECT	JOB	SHEET
Checked JJ	BEXAR		2452	01	035	250

LEVELS DISPLAYED
1 2 3 4 5 6 7 8 9 10 11 12 13 14 15 16
17 18 19 20 21 22 23 24 25 26 27 28 29 30 31 32
33 34 35 36 37 38 39 40 41 42 43 44 45 46 47 48
49 50 51 52 53 54 55 56 57 58 59 60 61 62 63

H:\DRAWINGS\67316031\ILLUM604LPD06.DGN

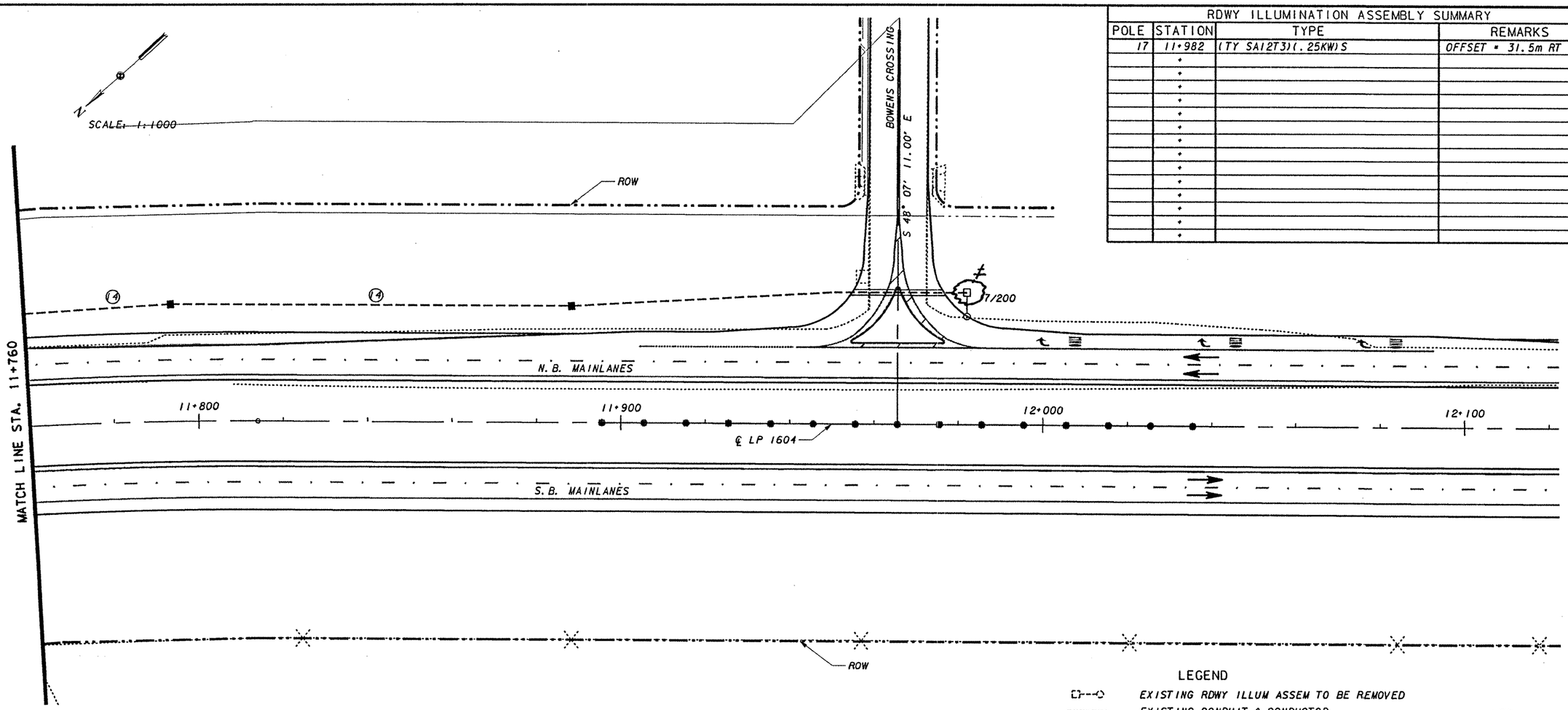

RDWY ILLUMINATION ASSEMBLY SUMMARY			
POLE	STATION	TYPE	REMARKS
17	11+982	(TY SA12T3)(.25KW)S	OFFSET = 31.5m RT

LEGEND

- EXISTING RDWY ILLUM ASSEM TO BE REMOVED
- EXISTING CONDUIT & CONDUCTOR
- EXISTING POWER POLE WITH LUMINAIRE TO REMAIN
- EXISTING RDWY ILLUM ASSEM TO REMAIN
- EXISTING SERVICE POLE TO REMAIN
- EXISTING GROUND BOX
- RDWY ILLUM ASSEM (TY SA 12T3-3)(.25KW)S
- RDWY ILLUM ASSEM (TY SA 12T3)(.25KW)S
- RDWY ILLUM ASSEM (TY SA 15T3)(.4KW)S
- RDWY ILLUM ASSEM (TY SA 15T3-3)(.4KW)S
- GROUND BOX
- JUNCTION BOX
- PVC & CONDUCTOR (TRENCHED)
- RMC & CONDR (PUSH BORE)
- ② CONDUIT RUN NUMBER
- XX/YYY LIGHT NUMBER/RELAY NUMBER
- DISCONNECT SWITCH
- ELECTRICAL SERVICE
- EXISTING POWER LINES

STATE OF TEXAS
BRENT L. CHRISTIAN
73921
REGISTERED PROFESSIONAL ENGINEER

Brent L. Christian
6/16/97

NOTE: ALL STATIONING REFERENCED IS THAT ALONG THE ℄ OF LOOP 1604

STATE OF TEXAS
GREGORY M. BIEDIGER
REGISTERED PROFESSIONAL ENGINEER

(‡ CHANGE ORDER NO. 8)

CONDUIT & CONDUCTOR SUMMARY							
	GROUND LENGTH (M)		CONDUCTOR LENGTH (M)		CONDUIT (M)		
RUN	#6 BARE		#6 INSUL.		32mm PVC SCH 40	50mm PVC BORED	REMARKS
14	1-224	-	2-224	-	209	15	
TOTAL	224		448		209	15	

ESTIMATED QUANTITIES		
ITEM	UNIT	QTY.
RDWY ILLUM ASBY (TY SA 12T3)(.25KW)S	EA	1
CONDUIT (PVC)(SCH 40)(32MM)	M	209
CONDUIT (RM)(PUSH BORE)(50MM)	M	15
GROUND BOX	EA	2
CONDUCTOR (NO. 6) BARE	M	224
CONDUCTOR (NO. 6) INSULATED	M	448
Fnd for Rdwy Ill Asm (Ty A) (750MMDS)	M	1.829 ‡

Texas Department of Transportation
LOOP 1604

ILLUMINATION PLAN SHEET
STA. 11+760.00 TO STA. 12+120.00

7 OF 11

Kimley-Horn and Associates, Inc.

Designed	JJ	DIST	FED REG	FEDERAL AID PROJECT	HIGHWAY
Checked	BLC	15	6		LP1604
Drawn	HP	COUNTY		CONTROL / SECT / JOB	SHEET
Checked	JJ	BEXAR		2452 / 01 / 035	251

LEVELS DISPLAYED

H:\DRAWINGS\6731603\ILLUM\604LPD07.DGN

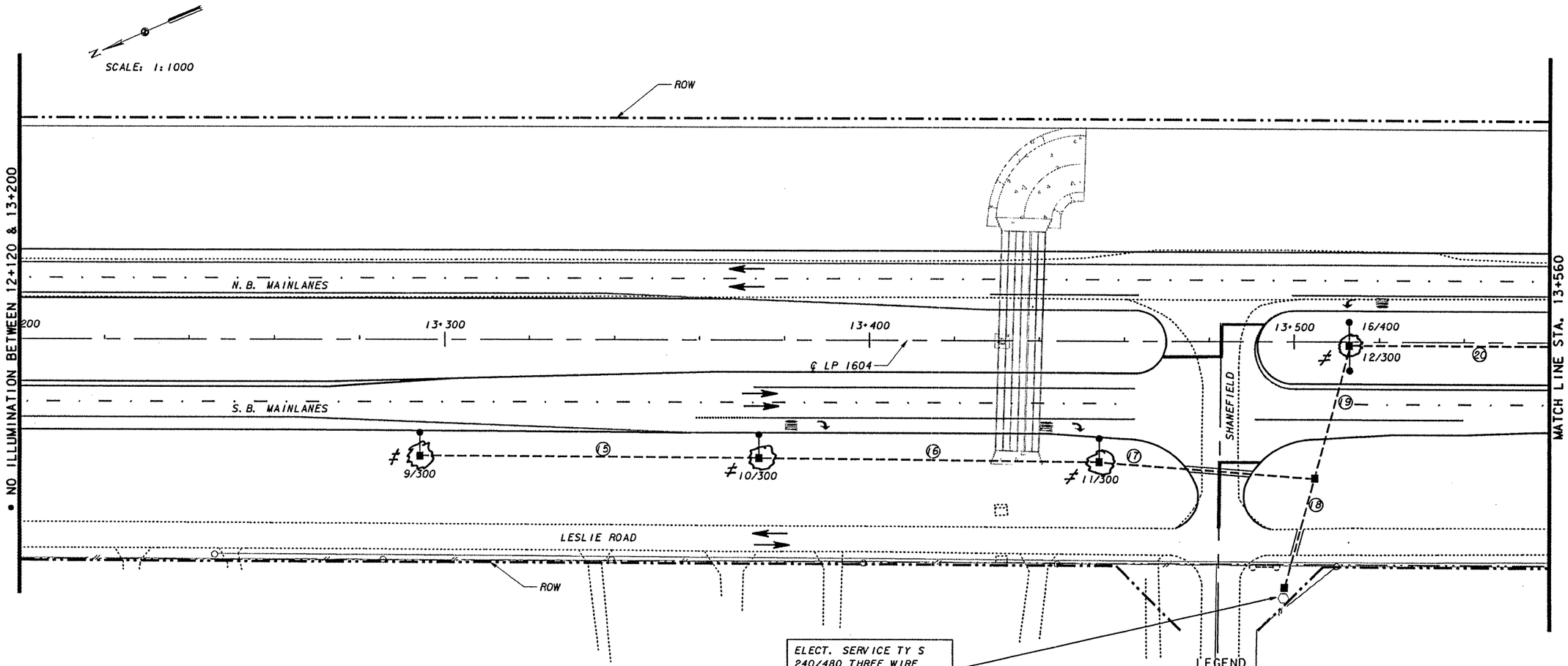

ELECT. SERVICE TY S
240/480 THREE WIRE
PHOTO ELECTRIC CONTROL
RELAY 300-7 LIGHTS

RELAY 300
7 @ 1.2 AMPS — 8.4 AMPS / 3.21 IR DROP

STATE OF TEXAS
BRENT L. CHRISTIAN
73921
REGISTERED PROFESSIONAL ENGINEER
6/16/97

STATE OF TEXAS
GREGORY A. BIEDIGER
61429
REGISTERED PROFESSIONAL ENGINEER

for (# CHANGE ORDER NO.8)

RDWY ILLUMINATION ASSEMBLY SUMMARY			
POLE	STATION	TYPE	REMARKS
9	13+294	(TY SA 15T3)(.4KW)S	OFFSET = 27.5m RT
10	13+374	(TY SA 15T3)(.4KW)S	OFFSET = 28.8m RT
11	13+454	(TY SA 15T3)(.4KW)S	OFFSET = 28.6m RT
12/16	13+513	(TY SA 15T3-3)(.4KW)S	OFFSET = 1m RT

CONDUIT & CONDUCTOR SUMMARY							
	GROUND LENGTH (M)		CONDUCTOR LENGTH (M)		CONDUIT (M)		
RUN	#6 BARE		#6 INSUL.		32mm PVC SCH 40	50mm PVC BORED	REMARKS
15	1-80	-	2-80	-	80		
16	1-80	-	2-80	-	80		
17	1-51	-	2-51	-	39	12	
18	1-30	-	2-30	-	21	9	
19	1-33	-	2-33	-	33		
20	1-46	-	2-46	-	46		
TOTAL	320		640		299	21	

NOTE: ALL STATIONING REFERENCED IS THAT ALONG THE ℄ OF LOOP 1604

Fnd for Rdwy Ill Asm (Ty A)(750MM DS) M 7.316 ±

ESTIMATED QUANTITIES		
ITEM	UNIT	QTY.
RDWY ILLUM ASSEM (TY SA 15T3)(.4KW)S	EA	3
RDWY ILLUM ASSEM (TY SA 15T3-3)(.4KW)S	EA	1
CONDUIT (PVC)(SCH 40)(32MM)	M	299
CONDUIT (RM)(PUSH BORE)(50MM)	M	21
GROUND BOX	EA	2
CONDUCTOR (NO. 6) BARE	M	320
CONDUCTOR (NO. 6) INSULATED	M	640
ELECT SERVICE TYS(240/480)40(NS)GS(T)TP(O)	EA	1

LEGEND

- EXISTING RDWY ILLUM ASSEM TO BE REMOVED
- EXISTING CONDUIT & CONDUCTOR
- EXISTING POWER POLE WITH LUMINAIRE TO REMAIN
- * EXISTING RDWY ILLUM ASSEM TO REMAIN
- EXISTING SERVICE POLE TO REMAIN
- EXISTING GROUND BOX
- RDWY ILLUM ASSEM (TY SA 12T3-3)(.25KW)S
- RDWY ILLUM ASSEM (TY SA 12T3)(.25KW)S
- RDWY ILLUM ASSEM (TY SA 15T3)(.4KW)S
- RDWY ILLUM ASSEM (TY SA 15T3-3)(.4KW)S
- GROUND BOX
- JUNCTION BOX
- PVC & CONDUCTOR (TRENCHED)
- RMC & CONDR (PUSH BORE)
- (2) CONDUIT RUN NUMBER
- XX/YYY LIGHT NUMBER/RELAY NUMBER
- DISCONNECT SWITCH
- ELECTRICAL SERVICE
- EXISTING POWER LINES

Texas Department of Transportation
LOOP 1604

ILLUMINATION PLAN SHEET
STA. 13+200 TO STA. 13+560

8 OF 11

Kimley-Horn and Associates, Inc.

Designed	JJ	DIST	FED REG	FEDERAL AID PROJECT			HIGHWAY
Checked	BLC	15	6				LP1604
Drawn	HP	COUNTY		CONTROL	SECT	JOB	SHEET
Checked	JJ	BEXAR		2452	01	035	252

H:\DRAWINGS\67316O3\ILLUM\604LPD09.DGN

LEVELS DISPLAYED
1 2 3 4 5 6 7 8 9 10 11 12 13 14 15 16
17 18 19 20 21 22 23 24 25 26 27 28 29 30 31 32
33 34 35 36 37 38 39 40 41 42 43 44 45 46 47 48
49 50 51 52 53 54 55 56 57 58 59 60 61 62 63

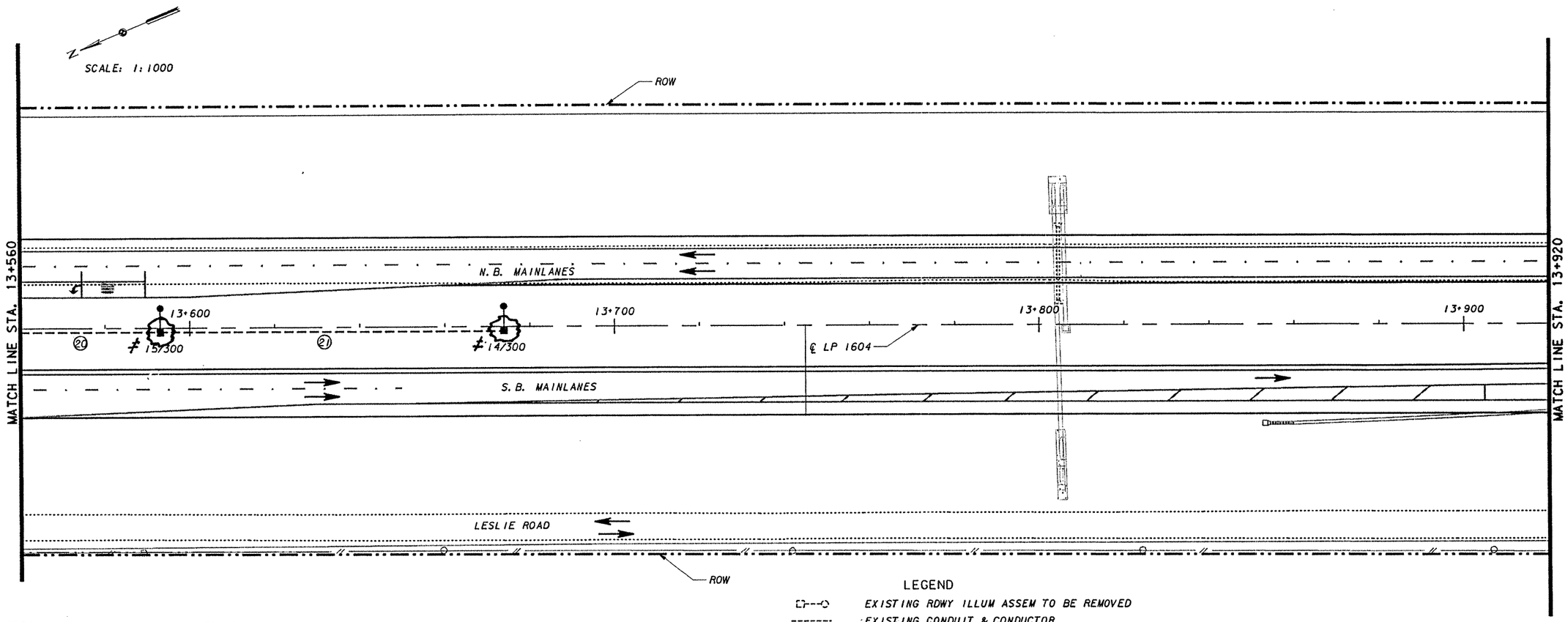

NOTE: ALL STATIONING REFERENCED IS THAT ALONG THE ℄ OF LOOP 1604

LEGEND

- EXISTING RDWY ILLUM ASSEM TO BE REMOVED
- EXISTING CONDUIT & CONDUCTOR
- EXISTING POWER POLE WITH LUMINAIRE TO REMAIN
- EXISTING RDWY ILLUM ASSEM TO REMAIN
- EXISTING SERVICE POLE TO REMAIN
- EXISTING GROUND BOX
- RDWY ILLUM ASSEM (TY SA 12T3-3)(.25KW)S
- RDWY ILLUM ASSEM (TY SA 12T3)(.25KW)S
- RDWY ILLUM ASSEM (TY SA 15T3)(.4KW)S
- RDWY ILLUM ASSEM (TY SA 15T3-3)(.4KW)S
- GROUND BOX
- JUNCTION BOX
- PVC & CONDUCTOR (TRENCHED)
- RMC & CONDR (PUSH BORE)
- ② CONDUIT RUN NUMBER
- XX/YYY LIGHT NUMBER/RELAY NUMBER
- DISCONNECT SWITCH
- ELECTRICAL SERVICE
- EXISTING POWER LINES

RDWY ILLUMINATION ASSEMBLY SUMMARY

POLE	STATION	TYPE	REMARKS
15	13+593	(TY SA 15T3)(.4KW)S	OFFSET = 1m RT
14	13+674	(TY SA 15T3)(.4KW)S	OFFSET 1m RT

CONDUIT & CONDUCTOR SUMMARY

RUN	GROUND LENGTH (M) #6 BARE		CONDUCTOR LENGTH (M) #6 INSUL.		CONDUIT (M) 32mm PVC SCH 40	50mm PVC BORED	REMARKS
20	1-34	-	2-34	-	34		
21	1-80	-	2-80	-	80		
TOTAL	114		228		114		

ESTIMATED QUANTITIES

ITEM	UNIT	QTY.
RDWY ILLUM ASSEM (TY SA 15T3)(.4KW)S	EA	2
CONDU T (PVC)(SCH 40)(32MM)	M	114
CONDUCTOR (NO. 6) BARE	M	114
CONDUCTOR (NO. 6) INSULATED	M	228
Fnd for Rdwy Ill Asm (Ty A) (750MM DS)	M	3.658±

STATE OF TEXAS
GREGORY A. BIEDIGER
61429
REGISTERED PROFESSIONAL ENGINEER
11/12/98

for (± CHANGE ORDER NO.8)

STATE OF TEXAS
BRENT L. CHRISTIAN
73921
REGISTERED PROFESSIONAL ENGINEER

Brent L. Christian
6/16/97

Texas Department of Transportation
LOOP 1604

ILLUMINATION PLAN SHEET
STA. 13+560 TO STA. 13+920

9 OF 11

Kimley-Horn and Associates, Inc.

Designed	JJ	DIST	FED REG	FEDERAL AID PROJECT			HIGHWAY
Checked	BLC	15	6				LP1604
Drawn	HP	COUNTY		CONTROL	SECT	JOB	SHEET
Checked	JJ	BEXAR		2452	01	035	253

LEVELS DISPLAYED

H:\DRAWINGS\6731603\ILLUM\604LPD10.DGN

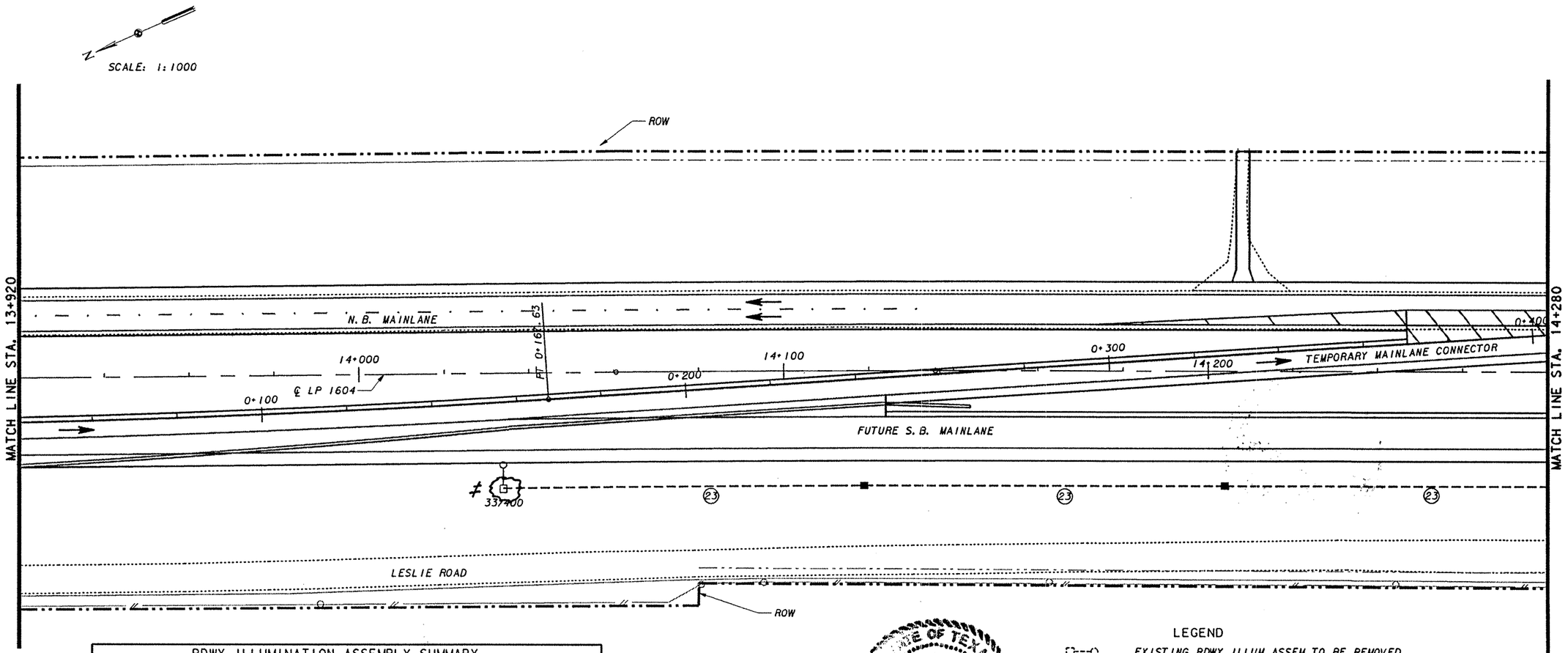

RDWY ILLUMINATION ASSEMBLY SUMMARY			
POLE	STATION	TYPE	REMARKS
33	14+035	(TY SA 12T3)(.25KW)S	OFFSET = 28m RT
	+		
	+		
	+		
	+		
	+		
	+		
	+		
	+		
	+		
	+		

NOTE: ALL STATIONING REFERENCED IS THAT ALONG THE ℄ OF LOOP 1604

STATE OF TEXAS
GREGORY A. BIEDIGER
61429
REGISTERED PROFESSIONAL ENGINEER
11/12/96
for CO #8

LEGEND

- EXISTING RDWY ILLUM ASSEM TO BE REMOVED
- EXISTING CONDUIT & CONDUCTOR
- EXISTING POWER POLE WITH LUMINAIRE TO REMAIN
- EXISTING RDWY ILLUM ASSEM TO REMAIN
- EXISTING SERVICE POLE TO REMAIN
- EXISTING GROUND BOX
- RDWY ILLUM ASSEM (TY SA 12T3-3)(.25KW)S
- RDWY ILLUM ASSEM (TY SA 12T3)(.25KW)S
- RDWY ILLUM ASSEM (TY SA 15T3)(.4KW)S
- RDWY ILLUM ASSEM (TY SA 15T3-3)(.4KW)S
- GROUND BOX
- JUNCTION BOX
- PVC & CONDUCTOR (TRENCHED)
- RMC & CONDR (PUSH BORE)
- (2) CONDUIT RUN NUMBER
- XX/YYY LIGHT NUMBER/RELAY NUMBER
- DISCONNECT SWITCH
- ELECTRICAL SERVICE
- EXISTING POWER LINES

STATE OF TEXAS
BRENT L. CHRISTIAN
73921
REGISTERED PROFESSIONAL ENGINEER
6/16/97

CONDUIT & CONDUCTOR SUMMARY							
	GROUND LENGTH (M)		CONDUCTOR LENGTH (M)		CONDUIT (M)		
RUN	#6 BARE		#6 INSUL.		32mm PVC SCH 40	50mm PVC BORED	REMARKS
23	1-245	-	2-245	-	245		
TOTAL	245		490		245		

ESTIMATED QUANTITIES		
ITEM	UNIT	QTY.
RDWY ILLUM ASSEM (TY SA 12T3)(.25KW)S	EA	1
CONDUIT (PVC)(SCH 40)(32MM)	M	245
GROUND BOX	EA	2
CONDUCTOR (NO. 6) BARE	M	245
CONDUCTOR (NO. 6) INSULATED	M	490
≠ End for Rdy Ill Asm (Ty A) (750MM DS)	M	1.829 ≠

(≠ CHANGE ORDER NO. 8)

Texas Department of Transportation
LOOP 1604

ILLUMINATION PLAN SHEET
STA. 13+920 TO STA. 14+280

10 OF 11

Kimley-Horn and Associates, Inc.

Designed	JJ	DIST	FED REG	FEDERAL AID PROJECT				HIGHWAY
Checked	BLC	15	6					LP1604
Drawn	HP	COUNTY			CONTROL	SECT	JOB	SHEET
Checked	JJ	BEXAR			2452	01	035	254

H:\DRAWINGS\673603\ILLUM604LPD13.DGN

LEVELS DISPLAYED
1 2 3 4 5 6 7 8 9 10 11 12 13 14 15 16
17 18 19 20 21 22 23 24 25 26 27 28 29 30 31 32
33 34 35 36 37 38 39 40 41 42 43 44 45 46 47 48
49 50 51 52 53 54 55 56 57 58 59 60 61 62 63 64

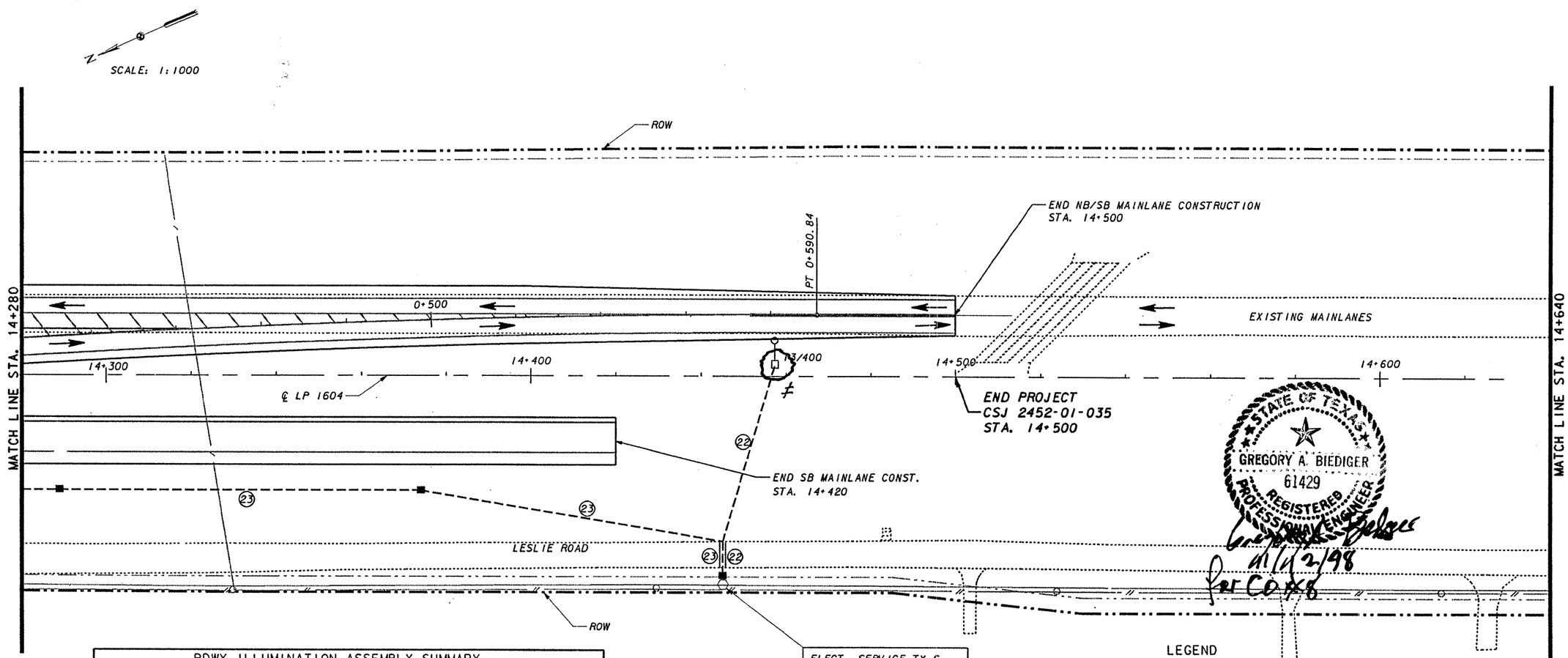

ELECT. SERVICE TY S
240/480 THREE WIRE
PHOTO ELECTRIC CONTROL
RELAY 400-2 LIGHTS

RELAY 400
2 @ .75 AMPS — 1.50 AMPS / 1.61 IR DROP

NOTE: ALL STATIONING REFERENCED IS THAT ALONG THE ℄ OF LOOP 1604

RDWY ILLUMINATION ASSEMBLY SUMMARY			
POLE	STATION	TYPE	REMARKS
13	14+457	(TY SA 12T3)(.25KW)S	OFFSET = 3m LT

CONDUIT & CONDUCTOR SUMMARY							
	GROUND LENGTH (M)		CONDUCTOR LENGTH (M)		CONDUIT (M)		
RUN	#6 BARE		#6 INSUL.		32mm PVC SCH 40	50mm PVC BORED	REMARKS
22	1-55	-	2-55	-	47	8	
23	1-180		2-180		172	8	
TOTAL	235		470		219	16	

ESTIMATED QUANTITIES		
ITEM	UNIT	QTY.
RDWY ILLUM ASSEM (TY SA 12T3)(.25KW)S	EA	1
CONDUIT (PVC)(SCH 40)(32MM)	M	219
CONDUIT (RM)(PUSH BORE)(50MM)	M	16
GROUND BOX	EA	3
CONDUCTOR (NO. 6) BARE	M	235
CONDUCTOR (NO. 6) INSULATED	M	470
ELECT SERV TYS(240/480)40(NS)GS(T)TP(O)	M	1
End for Rdy Ill Asm (Ty A) (750MM DS)	M	1.829 ‡

LEGEND

- EXISTING RDWY ILLUM ASSEM TO BE REMOVED
- EXISTING CONDUIT & CONDUCTOR
- EXISTING POWER POLE WITH LUMINAIRE TO REMAIN
- EXISTING RDWY ILLUM ASSEM TO REMAIN
- EXISTING SERVICE POLE TO REMAIN
- EXISTING GROUND BOX
- RDWY ILLUM ASSEM (TY SA 12T3-3)(.25KW)S
- RDWY ILLUM ASSEM (TY SA 12T3)(.25KW)S
- RDWY ILLUM ASSEM (TY SA 15T3)(.4KW)S
- RDWY ILLUM ASSEM (TY SA 15T3-3)(.4KW)S
- GROUND BOX
- JUNCTION BOX
- PVC & CONDUCTOR (TRENCHED)
- RMC & CONDR (PUSH BORE)
- (2) CONDUIT RUN NUMBER
- XX/YYY LIGHT NUMBER/RELAY NUMBER
- DISCONNECT SWITCH
- ELECTRICAL SERVICE
- EXISTING POWER LINES

STATE OF TEXAS
GREGORY A. BIEDIGER
61429
REGISTERED PROFESSIONAL ENGINEER
11/12/98
for CO #8

STATE OF TEXAS
BRENT L. CHRISTIAN
73921
REGISTERED PROFESSIONAL ENGINEER
6/16/97

(‡ CHANGE ORDER NO.8)

Texas Department of Transportation
LOOP 1604

ILLUMINATION PLAN SHEET
STA. 14+280 TO STA. 14+640

11 OF 11

Kimley-Horn and Associates, Inc.

Designed	JJ	DIST	FED REG	FEDERAL AID PROJECT			HIGHWAY
Checked	BLC	15	6				LP1604
Drawn	HP	COUNTY		CONTROL	SECT	JOB	SHEET
Checked	JJ	BEXAR		2452	01	035	255

LEVELS DISPLAYED

H:\DRAWINGS\6731603\ILLUM\604LPD11.DGN

GENERAL:

I. SCOPE

Details herein apply to roadway lighting installations bid under the following Specification Items: Roadway Illumination Assemblies, Relocate Roadway Illumination Assemblies, Foundations for Signs, Traffic Signals and Roadway Illumination Assemblies, and Special Specifications relating to roadway lighting. All work, materials and services not shown on the plans which may be necessary for complete and proper construction shall be performed, furnished and installed by the Contractor. Faulty fabrication or poor workmanship in any material, equipment or installation will be considered justification for rejection. Material and installation shall comply with the applicable provisions of the National Electrical Code and National Electrical Manufacturers Association standards. Where manufacturer's provide warranties or guarantees as a customary trade practice, Contractor shall furnish to the State such warranties or guarantees.

The location of poles and fixtures are diagrammatic only and may be shifted by the Engineer to accommodate local conditions. Erection and/or removal of poles and luminaires located near overhead electrical lines shall be accomplished using established industry and utility safety practices and in accordance with laws governing such work. The Contractor shall consult with the appropriate utility company prior to beginning such work.

II. ROADWAY ILLUMINATION ASSEMBLIES

A. General

1. Structural Support Design for Luminaires. Lighting standards shall be designed in accordance with the latest issue of the AASHTO "Standard Specifications for Structural Supports for Highway Signs, Luminaires and Traffic Signals." All poles shall be designed for 129 km/h wind loads. An additional 1.3 gust factor shall be applied to the wind loads. For transformer base poles, fabricator shall include transformer base and connecting hardware in design calculations and shop drawing submittals. Manufacturer's shop drawings shall include the ASTM designations for all material to be used. See paragraph II. b. for additional requirements for the transformer base.

2. Slip Joint Poles. Poles may be fabricated in two sections and field-assembled by the lap-joint method. The two sections shall telescope together with a lap length of not less than 1-1/2 times the shaft diameter at the lap joint. The longitudinal seam weld on the outer shaft at the slip joint end shall be a full penetration weld for a minimum of the slip joint length plus 152 mm.

3. Mast Arm Attachments. All poles and attachments shall be structurally designed to support two 3.5 meter mast arms and luminaires. Poles shall be supplied with mast arm combinations as shown in the plans. All mast arms shall be designed for a 25 kg luminaire having an effective projected area of 130 square millimeters.

4. Minor Damage Repair. The finished pole shall have a smooth, uniform finish free of pits, blisters, or other defects. Scratched, chipped, or damaged areas on galvanized poles and mast arms shall be thoroughly cleaned by wire brushing. The cleaned area shall be painted with two coats of zinc rich paint containing a minimum of 84% metallic zinc.

5. Pole Bonding Means. All shoe base poles, including poles on concrete traffic barriers, shall have a grounding lug with 1/2-13 NC female threads inside the pole near the hand hole, minimum of 3 full threads.

6. Hand Holes. All shoe base poles shall have hand holes with reinforcing frames and covers. The openings on all poles shall be approximately 102 mm x 254 mm located approximately 254 mm from the bottom of the pole and, except for poles mounted on concrete traffic barrier, shall be placed 90 degrees to mast arm unless otherwise noted on the plans. For poles mounted on concrete median barrier, all hand holes shall be on the same side of the median.

7. CTB Poles. Poles installed on concrete traffic barrier shall also meet the requirements of CTB details.

8. J-Hooks. All poles shall be equipped with a J-hook inside the pole, near the top for supporting vertical conductors.

9. Base Plate Bolt Circle. Bolt circles for poles mounted on CTB, see CTB1 (4) or SSCB (4). Poles placed on existing bridge brackets or existing foundations, bolt circle shall be coordinated with anchor bolts in place. For other bolt circles, See RID (3).

10. Steel Poles.

a. Steel poles shall be fabricated in accordance with the Item "Steel Structures." Longitudinal seam welds for pole sections shall have 60% minimum penetration, except that weld shall be full penetration within 152 mm of circumferential base plate welds. All welding shall be in accordance with the ANSI AWS Structural Code D1.1. Two-section poles joined by circumferential welds will not be permitted, unless otherwise shown on the plans. Unless otherwise shown on the plans, poles and hardware shall be galvanized in accordance with Item 445, "Galvanizing".

b. Pole components shall be constructed using the following materials:

Shaft: ASTM A-572 Grade 50 or ASTM A-595 Grade A (345 MPa min. yield) or ASTM 36M50.

Base Plate: ASTM A-27 Grade 65-35 or ASTM A-36.

Mast Arm Connector: ASTM A-27 Grade 65-35.

Mast Arms: Steel pipe ASTM A-53 Grade A or B or ASTM A-501 or A-513 TY I with minimum 205 MPa yield and 20% elongation in 51 mm.

Pole Cap: Pole cap shall be zinc die-cast, aluminum, or galvanized metal, secured by three stainless steel or galvanized screws.

Pole Hardware: All bolts except mast arm connection bolts shall be stainless steel or standard steel galvanized ASTM A-153 Class C or D, or B-695 Class 50. Mast arm connection bolts shall be ASTM A-325, ASTM A-321 or ASTM A-193 Grade B-7, galvanized as above. Nuts and washers shall be compatible with the bolts and shall be stainless steel or steel, galvanized as above. Lock washers shall be provided on all bolted connections.

11. Aluminum Poles.

a. Aluminum poles shall be fabricated in accordance with "Structural Welding, Aluminum" ANSI/AWS D1.2.

b. Pole components shall be constructed using the following materials:

Shaft: ASTM B-221 or B-241 Alloy 6063-T6. ASTM B-209 Alloy 5086-H34. ASTM B-221 Alloy 6005-T5.

Base Flange: ASTM B-26 Alloy 356.0-T6 or ASTM B-108 Alloy A356.0-T6 (Structural strength test required).

Mast Arm Fitting: ASTM B-209 Alloy 6061-T6 or ASTM B-221 Alloy 6005-T5.

Mast Arms: ASTM B-241 Alloy 6061-T6 or Alloy 6063-T6.

Pole Cap: ASTM B-209 Alloy 5086-H32 or ASTM B-108 or B-26 Alloy 356.0-T6.

Bolts: Stainless Steel AISI 300. Bolts threading into aluminum threads shall be treated with anti-seize compound: Never-Seez Compound, Permatex 133K or equal.

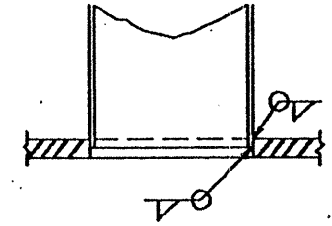

SECTION
POLE SHAFT TO BASE PLATE

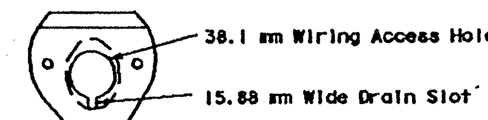

MAST ARM CONNECTOR

Steel Poles Only
Aluminum Pole Connector
Shall Be Clamp-on Type

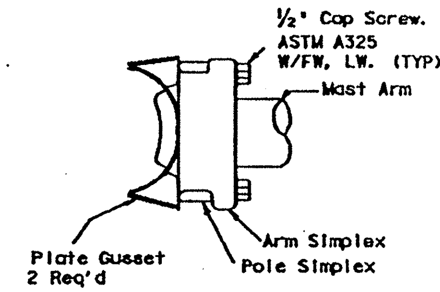

MAST ARM TO POLE
SHAFT CONNECTION

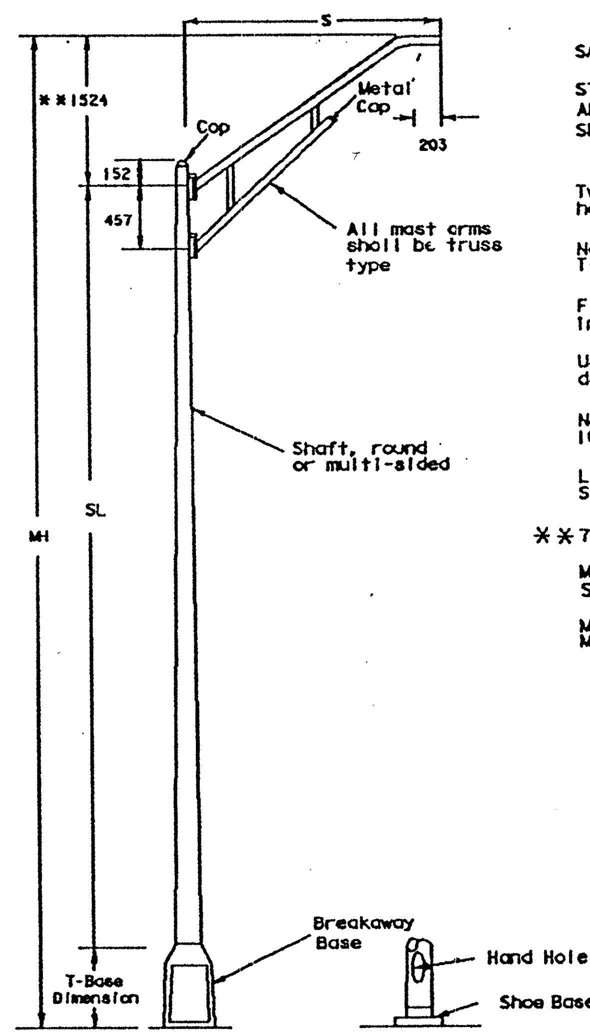

ROADWAY ILLUMINATION ASSEMBLY

EXPLANATION OF ROADWAY ILLUMINAION
ASSEMBLY DESIGNATIONS

(TYPE SA 15 T - 3 - 3) (.4KW) S

SA: Pole and mast arm may be steel or aluminum.
ST: Pole and mast arm must be steel.
AL: Pole and mast arm must be aluminum.
SP: Special (ovalized) steel pole for installing on CTB. See stanard sheet CTB1 (4).

Two numerical digits denote mounting height in meters.

Next letter denotes type of base, (S- Shoe Base, T-Transformer Base or X-Base, B-Shoe Base Bridge Mount)

First number denotes length of mast arm in meters.

Use of second mast arm is indicated by second dashed number which denotes length in meters.

Next three figures indicate luminaire rating (1 KW= 1000 watts, .4 KW= 400 watts, etc.)

Last letter indicates the type of lamp (M- Mercury, S- High Pressure Sodium, L- Low Pressure Sodium).

✱✱762 mm for poles with 1 m mast arms.

MH = Mounting Height
SL = Shaft Length
S = Spread (Mast arm length)
MH = SL + 1524 + (T-Base dimension)
MH = SL + 1524 (Shoe Base)

All dimensions are in millimeters unless otherwise noted.

STANDARD PLANS
TEXAS DEPARTMENT OF TRANSPORTATION
Traffic Operations Division

ROADWAY
ILLUMINATION
DETAILS

RID(1)-93A(M)

January 1992	DN-LR	CK-TB	DW-RS	CK-TB

Revisions: 5-93, 10-93, 1-96

State	Federal	Federal Aid Project	Sheet
15	6	CD 2452-1-35	256

County	Control	Section	Job	Highway
BEXAR	2452	01	035	LP1604

DISCLAIMER
The use of this standard is governed by the "Texas Engineering Practice Act". No warranty of any kind is made by TxDOT for any purpose whatsoever. TxDOT assumes no responsibility for the conversion of this standard to other formats or for incorrect results or damages resulting from its use.

DN: LR CK: CW DW: DN CK: MT
DATE: ACC: d58hpl FILE: /d580504

II. ROADWAY ILLUMINATION ASSEMBLIES (cont.)

A. General (cont.)

12. Alternate material equal to or better than material specified may be substituted with the approval of the Engineer.

13. Installation of high Strength Bolts. The tightening of nuts on high strength bolts shall be in accordance with the item "Structural Bolting."

14. Roadway Illumination Assembly poles shall be erected plumb and true. Top of foundation shall be struck level and shims used to plumb pole, except that for shoe base poles leveling nuts may be used. Leveling nuts shall not be used under transformer bases. Grout shall not be placed between base plate or flange and the foundation.

15. In each pole, continuous color-coded stranded No. 12 AWG copper Type XHHW or other approved XLP conductors shall be connected to the line side of each ballast.

16. Acorn nuts will not be allowed for attaching pole to transformer base or foundation. Nut covers will not be allowed.

17. Fabrication tolerances shall be as shown on Fabrication Tolerances Table.

B. Transformer Base

1. Transformer base shall be cast from aluminum, ASTM B-108 or B-26 Alloy 356.0-T6, or other material approved by the Engineer, and shall be furnished or with four washers or lugs as recommended by the manufacturer. Transformer base bolt circles (Top and Bottom) shall match bolt circles for poles and foundations shown on RID (3).

2. Transformer base shall be approximately 375-500 mm high and shall have a door approximately 330 mm x 203 mm x 235 mm or as otherwise approved by the Engineer. Screw or bolts for attachment of door to base shall be stainless steel. Four machine bolts with four nuts, eight flat washers and four lock washer, galvanized ASTM A-153 Class C or D, or B-695 Class 50, shall be provided with each transformer base for connecting the pole. Bolts shall be ASTM A325 or approved equal. Nuts shall be ASTM A-563 grade DH galvanized. A 1/2-13 NC female threaded grounding lug shall be provided inside the transformer base near the bottom.

3. The X-base shall be made from extruded aluminum channel and aluminum plate. The base breakaway features shall rely on bolt shear and not on bolt torque. Bolt shall have torque controlled break-off hex-head. Bolt shall be Aluminum Association type 2024-T4 aluminum. X-base channel shall be connected with aluminum bolts. Bolt shall be left hand thread and shall not be interchangeable with any other bolt not designed specifically for use with the X-base.

4. All breakaway bases shall meet the breakaway requirements of the AASTHO "Standard Specifications for Structural Supports for Highway Signs, Luminaires and Traffic Signals," latest edition, and shall have been tested by FHWA-approved methods. All bases shall have been structurally tested to meet or exceed the full designed plastic moment capacity of the pole. Certification of the plastic moment load test and FHWA breakaway requirement test of the model of base being furnished shall be submitted with shop drawings. Shop drawings shall show breakaway base model number and manufacturer's name or logo.

5. Bases shall be stamped, incised or by other approved permanent means, marked to show fabricators name or logo, and model number. Such information shall be placed in a readily seen location, inside or outside the base, but shall not be placed on the door.

6. Doors for transformer bases shall be made of plastic, fiberglass or other non-aluminum material approved by the Engineer. Transformer bases shall be cleaned by grit blast cleaning after heat treatment. Certification by the manufacturer of heat treatment shall be furnished with transformer bases. The certification shall show the metal alloy and temper and that the base meets those requirements, chemical and physical. The certification shall also show the material ASTM specification. Transformer bases shall be cast with a removable tab bar for material testing. Some bars may have been removed by the manufacturer for testing.

C. All Luminaires.

1. The luminaire housing shall be cast or drawn from a non-ferrous alloy and shall be free of cracks and excessive porosity. All nuts, crews, clips, washers and attaching hardware shall be made of stainless steel; steel electro-zinc-plated, minimum thickness 0.005 mm with olive green drab or yellow chromate conversion coating; steel coasted with an acidic chromate-phosphate-binder system primer, top coated with a polytetrafluoroethylene modified silicon primer, bright metallic in color, meeting the requirements of General Motors automotive specification GM 164M; or other approved conversion coatings except that brackets may be made from pre-galvanized steel. All threaded surfaces used in the housing shall be lubricated with a silicone grease.

2. The slipfitter shall securely clamp the luminaire to the most arm. A positive means of vertical adjustments shall be provided. The refractor or lens shall be clear glass. The optic assembly shall be provided with resilient gaskets and so constructed that a positive seal against weather and other contaminants will be maintained. The luminaire shall be designed to permit easy removal of the refractor from the luminaire but shall provide a positive means of preventing an unintentional separation. The latch shall provide a positive means of maintaining closure of the luminaire. The socket shell shall be nickel plated and shall be rigidly attached to a high grade porcelain mogul base which shall extend and enclose the metal shell. A locking means shall be incorporated in the shell of the socket to positively resist the removal of the lamp. Reflectors shall be polished aluminum with Alzak or equal coating and shall not be painted.

3. Most-arm mounted luminaires shall be provided with a leveling indicator which is clearly visible from the ground. Leveling indicator shall be sensitive to one (1) degree (maximum) changes in position at any point within five (5) degrees (minimum) level position. Unless otherwise directed by the Engineer, most-arm mounted luminaires will be installed in the level position.

4. Underpass luminaires shall be fused internally. Fuses shall be 10 amp time-delay type.

D. High Pressure Sodium Vapor Luminaires

1. Photometrics

a. The U/P (SPL-CO) (.15KW)S (TY 1) and (TY 2) underpass luminaires shall be 150 watt high pressure sodium. IES TYPE M-C with flat tempered glass lens. The fixtures shall provide a minimum measured intensity of 2.16 lux in a rectangular area measuring 24 meters x 9 meters, when mounted 6 meters above the midpoint of either long side of the surface area

b. The 250-watt most arm mounted luminaire shall be IES Type semi-cutoff or cutoff and, when mounted 12 meters above the midpoint of either long side of a rectangular area 61 meters by 15 meters, shall provide a measured minimum intensity of 2.16 lux at any point on the surface of this area. Light intensities measured in lux along a line parallel to and 6 meters in from the long side of the previously defined rectangular area above which the luminaire is mounted shall decrease at a rate not to exceed 8.64 lux in any 3 meter interval along the aforementioned line from 3 to 21 meters on both sides of the luminaire and shall not be less than 6.48 lux at any point along such line.

The maximum to minimum horizontal illuminance uniformity ratio shall not exceed 20:1 within the above mentioned rectangular area.

c. The 400-watt most arm mounted luminaire shall be IES Type semi-cutoff or cutoff and, when mounted 15 meter above the midpoint of either long side of a rectangular area 73 meters by 21 meters, shall provide a measured minimum intensity of 2.16 lux at any point on the surface of this area. Light intensities measured in lux along a line parallel to and 9 meters in from the long side of the previously defined rectangular area above which the luminaire is mounted shall decrease at a rate not to exceed 8.64 lux in any 3 meter interval along the aforementioned line from 3 to 27 meters on both sides of the luminaire and shall not be less than 6.48 lux at any point along such line.

The maximum to minimum horizontal illuminance uniformity ratio shall not exceed 20:1 within the above mentioned rectangular area.

d. The luminaires shall meet the photometric requirements shown above, when energized at 100 percent of rated line voltage. Test will be run with the fixture in the level position as indicated on leveling indicator.

Fabrication Tolerances Table		
Part	Dimension	Tolerance
Pole Assembly	Shaft length	± 25
	I.D. of outside piece of slip fitting pieces	+ 3.125 - 1.563
	O.D. of inside piece of slip fitting pieces	+ 0.781 - 3.125
	Shaft diameter: other	+ 4.688
	Out of "round"	6.25
	Straightness of shaft	± 6.25 in 3.05 m
	Twist in shaft	4° in 15.24 m
	Perpendicular to baseplate	3.125 in 600
	Pole centered on baseplate	± 6.25
	Location of Attachments	± 6.25
Arm Assembly	Arm Length	± 75
	Arm Rise	± 43.75 in 3.05 m
	Arm Diameter	± 4.688
	Overall length or width	± 6.25
	Thickness	+ 6.25 - 1.563
	Deviation from flat	3.125 in 300
	Spacing between holes	± 2.344
	Anchor bolt hole size	± 1.563
Anchor Bolt	Length	+ 25 - 6.25
	Threaded length	+ 37.5 - 3.125
	Galvanized length (if required)	+ 200 - 6.25
Miscellaneous	Bolt hole spacing	± 1.563
	Strut location in truss arms	± 37.5

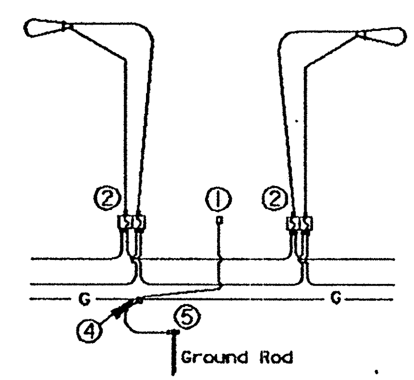

FOR THREE-WIRE CIRCUIT-CENTER GROUNDED

LUMINAIRES SERVED AT 480V ON 240/480 VOLT SERVICE OR LUMINAIRES SERVED AT 240V FOR FOR 120/240 VOLT SERVICE.

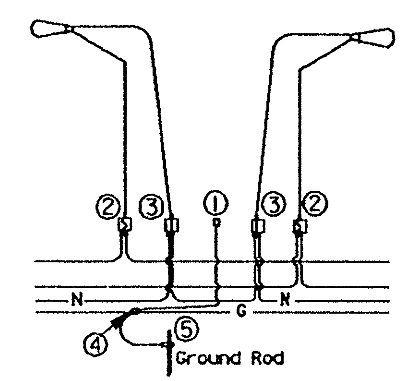

FOUR-WIRE CIRCUIT-CENTER GROUNDED

LUMINAIRES SERVED AT 240V (240/480 VOLT SERVICE)

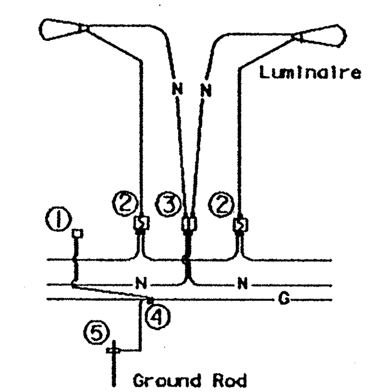

THREE WIRE CIRCUIT-OUTSIDE GROUNDED

LUMINAIRES SERVED AT 480V ON 480 VOLT 2 WIRE SERVICE OR LUMINAIRES SERVED AT 240V ON 240 VOLT 2 WIRE SERVICE.

NOTES:

① Pole Bonding Connector Blackburn TTC3 or Weaver TGC3 or equal.

② Fused Connector- Homac Flood Seal Series; Bussman HEB Series; Gould GEB Series; or equal. All fuses shall be time-delay types, 10 Amp (Littlefuse FLQ, Bussman FNQ or equal).

* ③ Un-fused Connector- Homac Flood Seal Series; Bussman HEB Series; Gould GEB Series; or equal. Dummy / Neutral fuse shall be Bussman NTS-R-30 or equal.

④ Split Bolt or other connector.

⑤ Ground Rod Clamp - Blackburn GG58H, Burndy GKP635, or equal.

*For Transformer Base Poles. On Shoe Base Poles omit un-fused connector for neutral conductor.

All dimensions are in millimeters unless otherwise noted.

STANDARD PLANS
TEXAS DEPARTMENT OF TRANSPORTATION
Traffic Operations Division

ROADWAY ILLUMINATION DETAILS

RID(2)-93A(M)

January 1992 | DN: KB | CK: TB | DW: RS | CK: TB

REVISIONS: 5-93, 10-93, 1-96

15 | 6 | CD 2452-1-35 | 257

BEXAR

DISCLAIMER
The use of this standard is governed by the "Texas Eng[illegible]ring Practice Act". No warranty of any kind is made by TxDOT for any purpose whatsoever. TxDOT [illegible]sumes no responsibility for the conversion of this standard to other formats or for incorrect resu[illegible]s or damages resulting from its use.

DN: LR CK: CW DW: DN CK: MT

DATE: ACC: d58hpl FILE: r/d580504

DISCLAIMER
The use of this standard is governed by the "Texas Engineering Practice Act". No warranty of any kind is made by TxDOT for any purpose whatsoever. TxDOT assumes no responsibility for the conversion of this standard to other formats or for incorrect results or damages resulting from its use.

II. ROADWAY ILLUMINATION ASSEMBLIES (cont.)

D. High pressure Sodium Vapor Luminaires (cont.)

2. Ballasts

a. All ballasts shall be isolated-winding lag-type magnetic regulators designed to operate high pressure sodium lamps unless otherwise shown on the plans.

b. When the circuit voltage indicated on the plans is applied, the ballast input wattage during fluctuations of the test voltage of +10 and -10 percent shall not exceed the following:

Nominal Lamp Rating, Watts	Maximum Wattage Input
150	220
250	440
400	552

c. During fluctuation of the test voltage of +10 and -10 percent, the lamp wattage fluctuation shall not exceed a total of 20 percent and ballast shall maintain lamp wattage within the following limits:

Nominal Lamp Watts	Minimum Lamp Watts	Maximum Lamp Watts
150	110	180
250	175	370
400	280	475

d. The power factor of any ballast when tested at the circuit voltage indicated in the plans shall be not less than 90 percent.

e. The electronic starting aid shall provide a starting pulse with an amplitude of 2500 volts minimum, 4000 volts maximum. The pulse width shall be a minimum of 0.8 microseconds at 2250 volts. The pulse shall occur when the open-circuit voltage is equal to or greater than 90 percent of peak open-circuit voltage. Pulse repetition rate shall be a minimum of one per cycle and pulse current shall be a minimum of 0.18 amperes. Electronic starting aids for mast-arm mounted poles shall be replaceable without the use of tools. The starting aid shall discontinue to pulse when the lamp starts.

f. Luminaires will be tested for satisfactory operation of the starter board under open-circuit (lamp-out) condition for a minimum of 72 hours. Any failures of starter boards will be considered grounds for rejection of the model starter board being supplied.

g. Ballasts shall permanently and clearly indicate the following: lamp type, catalog number, voltage rating, connection diagram, and manufacturer. Capacitors in all luminaires shall be non-PCB type.

3. Lamps

a. All lamps shall be new and shall be of recent manufacture.

b. High pressure sodium vapor lamps in the wattage range of 200 to 400 watts inclusive shall have a lamp voltage not greater than 108 volts when tested after thirty minutes burn-in. 150 watt lamps shall be rated for 55 volts.

c. All lamps shall have nickel plated mogul bases.

4. Testing

a. Ballasts and luminaires will be tested using a lamp furnished for the same project.

b. Luminaires, ballasts, and lamps will be sampled and tested in accordance with the TXDOT Materials and Test Division's Manual of Testing Procedures.

III. ROADWAY ILLUMINATION ASSEMBLY FOUNDATIONS

A. Foundations will be paid for under the item "Foundations for Signs, Traffic Signals and Roadway Illumination Assemblies", unless otherwise shown on the plans. Top 152 mm of foundation shall be formed and struck level.

B. Anchor bolts for all poles, except CTB-mounted poles, shall be A-36M55 Anchor Bolts. Anchor bolts for CTB mounted poles shall be steel, ASTM A-325 or A-321 threaded rod. Nuts for CTB anchor bolts shall be ASTM A-563 Grade D heavy hex, galvanized. The top 203 mm of all anchor bolts shall be galvanized per ASTM A-153. Anchor bolts in foundations shall be 1¼" x 30" for mounting heights 12 meters and greater, 1" x 30" for mounting heights less than 12 meters.* Anchor bolts shall have top end threaded not less than 127 mm and furnished with galvanized hex nuts, flat and lock washers and template. The lower end of the bolt shall be threaded and furnished with nut and template. When bolts with rolled threads are furnished, bolt body need not be full size. See CTB and SSCB details for anchor bolts in concrete traffic barriers. Anchor bolts and nuts shall have Class 2A and 2B fit. Nuts shall be tapped and chased after galvanizing.

C. Concrete shall be Class A or C.

D. A minimum of two conduits shall be installed in each foundation. See lighting layout sheets for locations of foundations with more than two conduits. Any unused conduits in foundations shall be capped on both ends.

E. Unless otherwise dimensioned on the plans, breakaway roadway illumination assemblies should be located as shown in the placement table. Non-breakaway illumination assemblies should be protected from vehicular impact (i.e. 610 mm behind guard rail or mounted atop traffic barrier) or located outside the clear zone, except that 762 mm from curb face is minimum desired for light poles on city streets, 45 mph or less, see design guidelines for further information.

* Except that anchor bolts shall be 25 mm x 762 mm for all X-base poles.

Breakaway Pole Placement, see Para. III. E.	
Roadway Functional Classification	** Pole Offset (distance to transformer base, tolerance + 150 mm)
Freeway mainlanes (roadways with full control of access)	4.5 m (minimum and typical) from lane edge
All curbed, 45 mph or less design speed	750 mm minimum (4.5 m desirable) from curb face
All others	3 m minimum* (4.5 m desirable) from lane edge

*or as close to ROW line as is practical

**all breakaway poles should have 2/5 of the luminaire mounting height behind the pole for "falling area" to prevent encroachment on other travel lanes. See design guidelines.

BOLT CIRCLES AND ANCHOR BOLTS				
MOUNTING HEIGHT	POLE BASE PLATE	BOLT CIRCLE		BOLT SIZE
		SHOE BASE	*T-BASE	
LESS THAN 12 m	330 mm	330 mm	356 mm	1 IN. X 30 IN.
12 m OR GREATER	381 mm	381 mm	438 mm	** 1¼ IN. X 30 IN.

* AND X-BASE
** 1" FOR X-BASE

FOUNDATIONS				
FND. TYPE	DRILL SHAFT		REINFORCING	
	DIA.	LENGTH	BAR	SPIRAL
A	750	1829	6-#4	#2
B	750	2438	6-#5	#2
C	750	3048	6-#6	#3

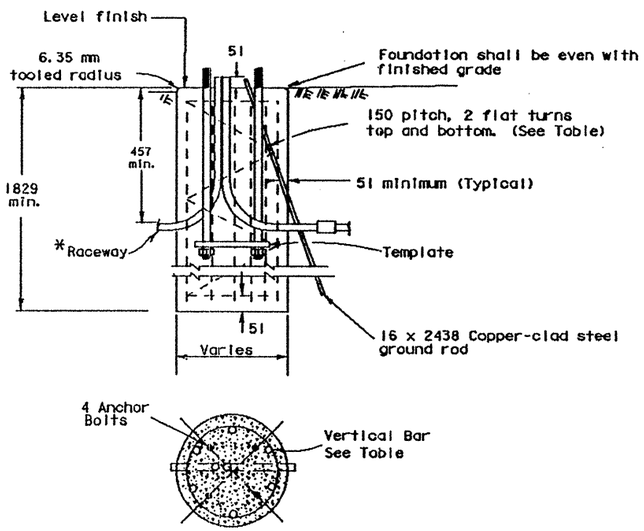

FOUNDATION DETAIL

*Min. 50 Dia. for duct cable, 457 radius bends. For conductor in conduit system, same size as system conduit with standard radius bends.

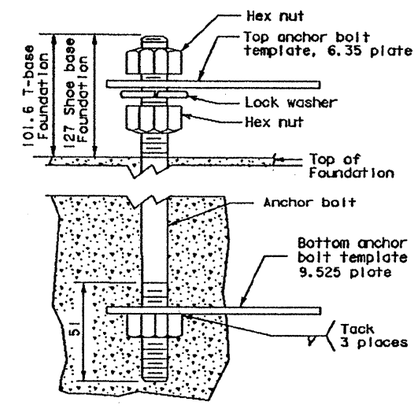

ANCHOR BOLT DETAIL

All dimensions are in millimeters unless otherwise noted.

STANDARD PLANS
TEXAS DEPARTMENT OF TRANSPORTATION
Traffic Operations Division

ROADWAY ILLUMINATION DETAILS

RID(3)-93B(M)

FILE NAME	DATE: January 1992	DN-KB	CK-TB	DW-RS	CK-TB
5-93 10-93 2-94 1-96	4-96	15	6	CD2452-1-35	258
		COUNTY BEXAR		2452	01

LEVELS DIS
DATE:
ACC: d58hpl r/d580504
FILE:
DN: LR
CK: CW
DW: DN
CK: MT

DISCLAIMER
The use of this standard is governed by the "Texas Engineering Practice Act". No warranty of any kind is made by TxDOT for any purpose whatsoever. TxDOT assumes no responsibility for the conversion of this standard to other formats or for incorrect results or damages resulting from its use.

I. GENERAL REQUIREMENTS FOR ALL ELECTRICAL WORK

Faulty fabrication or poor workmanship in any material, equipment, or installation will be considered justification for rejection. Materials and installation shall comply with the applicable provisions of the National Electrical Code (NEC) and National Electrical Manufacturers Association (NEMA) standards. Where manufacturers provide warranties or guarantees as a customary trade practice, Contractor shall furnish to the State such warranties or guarantees. The location of conductors, conduit, junction boxes, duct cable, ground boxes, and electrical services are diagrammatic only and may be shifted by the Engineer to accommodate local conditions.

Grounding shall be as shown on the plans and in accordance with the NEC. Metallic conduit, lighting poles, and luminaires on bridge structures shall be grounded by connection to the grounding conductor and by installing a ground rod in each ground box or junction box, as shown on the plans, at bridge ends and in each ground box installed for underpass lighting. The grounding jumper shall be bare or, if insulated, shall be green. Ground rods, connectors, and bonding jumpers will not be paid or separately, but will be subsidiary to the various bid items.

II. CONDUIT

A. MATERIALS.

1. Conduit must be UL-approved for the intended use shown on plan sheets. Aluminum conduit will not be permitted unless shown elsewhere on the plans. EMT and IMC will not be permitted unless shown on the plans.
2. Fittings for steel conduit shall be steel or malleable iron, threaded or compression type threadless and rain-tight. Die cast, set screw, indenter or push-on (socks) fittings will not be permitted.
3. Expansion joints for metallic conduit shall be provided with a grounding strap. Expansion joints for metallic conduit shall be Appleton UNYL 50 Series, OZ AX Series, or equal.
4. Junction boxes in rigid metal conduit systems shall be cast iron, hot-dipped galvanized, or cast aluminum (surface-mounted only) unless otherwise shown on the plans.
5. Surface-mounted junction boxes for Rigid Metal conduit 32 millimeters and larger shall have a minimum wall thickness of 4.76 mm. Crouse Type WAB, O-Z Type YS, Adalet Type 3R, or approved equal, with mounting lugs, minimum size 150 mm x 150 mm x 100 mm, or as otherwise required by the NEC, or as shown elsewhere on the plans. For conduit 25 millimeters or smaller, surface-mounted boxes may be 114 mm (min.), round, square, or rectangular, and approximately 75 mm deep, Crouse Hinds Type GRFX, Appleton Type JBOX, two-gang FD, or approved equal, unless otherwise required by the NEC or the plans.
6. For rigid metal conduit systems Flush-mounted junction boxes installed in concrete structures shall be minimum 150 mm x 150 mm x 100 mm, or as required by the NEC, Crouse Hinds Type WGB, O-Z Type YR, or approved equal.
7. Unless otherwise shown elsewhere on the plans, junction boxes in EMT conduit systems shall be made from galvanized sheeting and shall be UL listed as approved for outdoor use. Sheet metal junction boxes shall be sized in accordance with the NEC.
8. Unless otherwise shown elsewhere on the plans, junction boxes in PVC conduit systems shall be PVC, UL listed for outdoor use, and sized in accordance with the NEC.

B. CONSTRUCTION METHODS.

1. Continuous runs of conduit in excess of 45 meters attached to structures shall have expansion joints at mid-span or 45 meter intervals. Conduit in structures shall have expansion joints at structure expansion joints or as shown in plans.
2. Conduit hangers or straps shall be spaced at maximum intervals of 1524 millimeters. When shown on the plans, hangers shall be used when hanging conduit from horizontal surfaces (See detail). Conduit spacers shall be used with metal conduit placed on surfaces of concrete structures (See conduit detail).
3. Conduit hangers or straps shall not be attached directly to prestressed concrete beams except as shown in the plans and approved by the Engineer.
4. Conduit placement beneath existing roadways, driveways or sidewalks shall be accomplished by jacking or boring, unless otherwise noted on the plans or directed by the Engineer. The Contractor shall backfill and compact the bore pits to bottom of conduit prior to installing connecting conduit or duct cable, to prevent bending of this connection. Duct cable shall be extended through conduit casings in one continuous length.
5. With approval of the Engineer, conduit placed under new roadways may be trenched in subgrade and backfilled with excavated material. When approved by the Engineer, conduit may be trenched in sub-base but must be backfilled with cement-stabilized base. Conduit placed after base or surfacing operation has begun must be jacked or bored.
6. Open ends of all conduit and raceways shall be fitted with temporary caps or plugs to prevent entry of dirt, debris and rodents during construction.
7. Conduit entry into the top of junction boxes shall be made weathertight using threaded fittings into hubs, or with sealing locknuts inside and out.
8. A bonding jumper shall be installed from grounding bushing to nearest rod, grounding lug, or grounding conductor. At electrical services, bonding jumper shall be AWG Size No. 6. All other jumpers shall be minimum size AWG No. 8. Conduit used as casing under roadways for duct cable need not be grounded if duct extends full length through the casing.
9. Conduit ends shall be sealed with heat shrink boots or tubes with sealant, silicone caulking or shall be sealed by other methods approved by the Engineer. Sealing shall be done after completion of any required pull tests.
10. Where called for on the plans, trenched conduit shall be placed on a 51 mm sand cushion and backfilled with a minimum of 152 mm of additional sand fill.
11. Conduits entering ground boxes shall be placed so that the conduit ends shall be not less than 127 mm nor more than 229 mm from the box cover (See ground box detail).
12. Metal junction boxes shall be bonded to the grounding conductor.

III. ELECTRICAL CONDUCTORS

A. MATERIALS.

1. Insulated conductors NEC Type XHHW or USE (XLP). Conductors in circuits containing two or more insulated conductors shall be color-coded at each accessible point (i.e., ground boxes, pole bases, junction boxes). Color-coding for No. 10 and smaller shall be by continuous jacket color. Color-coding of electrical conductors No. 8 or larger may be by continuous jacket color or colored tape. Colored tape marker shall consist of a half-lap of tape covering a 152 mm length of conductor.
2. Bonding conductor No. 8 or smaller, tied to ground rods, shall be solid. Connection of bonding conductor to ground rod shall be made using UL listed connectors designed for such purpose.

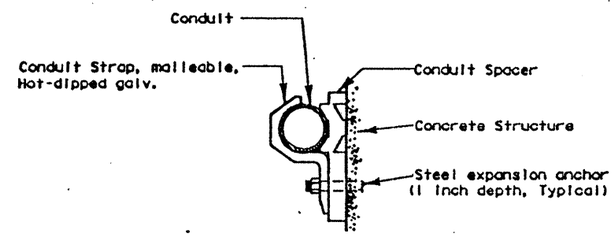

CONDUIT STRAP DETAIL
(Attachment to concrete surfaces)
(See para. II.B.2)

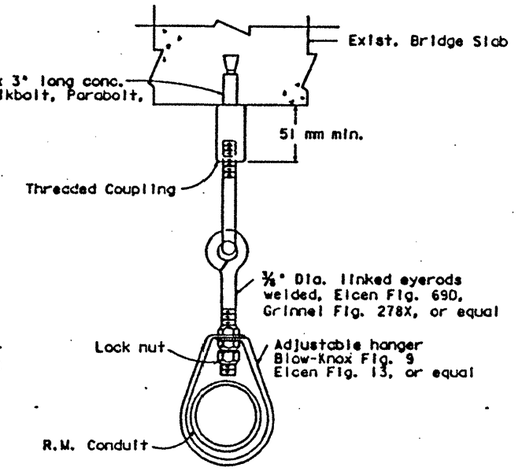

CONDUIT HANGER DETAIL
(Attachment to horizontal surfaces)
(See II.B.2)

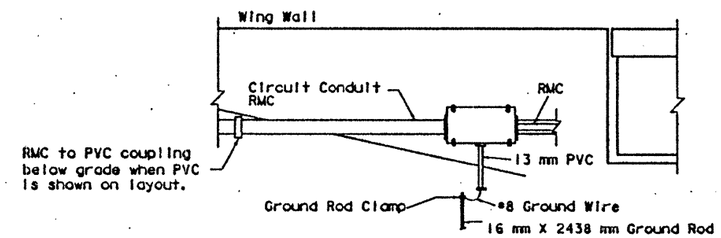

NOTES

1. Conduit shall be 50 mm RMC for duct cable entry to junction box.
2. Ground rod clamp to be Blackburn GG 5/8H, Weaver W5/8 or equal.
3. Surface mounting shown, for conduit to be placed in structure use flush-mounted box.
4. Bond junction box to grounding conductor.

TYPICAL CONDUIT ENTRY TO BRIDGE STRUCTURE DETAIL

All dimensions are in millimeters unless otherwise noted.

STANDARD PLANS
TEXAS DEPARTMENT OF TRANSPORTATION
Traffic Operations Division

ELECTRICAL DETAILS-
CONDUIT, CONDUCTORS

ED(1)-93A(M)

FILE NAME DATE: January 1992	DN: KB	CK: TB	DW: RS	CK: TB	
REVISIONS 5-93 10-93 1-96	15	6	CS 2452-1-35		259

LEVELS DI
DATE
ACC: d58hplo/ ~/d580504
FILE:
DW: LR
CK: CW
DW: DN
CK: MT

DISCLAIMER
The use of this standard is governed by the "Texas Engineering Practice Act". No warranty of any kind is made by TxDOT for any purpose whatsoever. TxDOT assumes no responsibility for the conversion of this standard to other formats or for incorrect results or damages resulting from its use.

B. CONSTRUCTION METHODS.

1. A non-metallic pull rope shall be use in pulling conductor in non-metallic conduit.
2. After conductor is placed in conduit, a pull test will be made on conductors. When any length of conductor cannot be freely pulled the Contractor shall make any needed alterations or repairs at the Contractor's expense.
3. Conductors in illumination poles shall be supported by a J-hook in the top of the pole.
4. A sufficient length of conductor shall be left in ground boxes (610 mm minimum to point of splice, 914 mm minimum when conductor is pulled through with no splice), enclosures, and pole bases (305 mm minimum) for making up connections.
5. Except for overhead wiring, splices shall be made only in junction boxes, ground boxes, pole bases, or electrical enclosures and shall be made with approved compression sleeves or split bolt connectors. Splices shall be insulated with heavy wall heat shrink tubing containing factory applied sealant. Heat shrink sleeves shall lap conductors insulation a minimum of 51 mm on both sides of the splices.
6. When approved by the Engineer, wire nuts may be used for No. 8 and smaller conductors in above-ground junction boxes, but not in pole bases or ground boxes. Wire nuts shall be positioned upright to prevent the accumulation of water.

IX. DUCT CABLE.

A. Duct cable shall be placed by the open trench method, except where otherwise noted, at a minimum depth of 457 mm unless otherwise indicated. Bends in duct cable shall be made in the manner recommended by the manufacturer. Minimum bending radius shall be 381 mm for 25 mm duct and 457 mm for 32 mm duct. Handling of duct cable reels and installation of duct shall be as recommended by the manufacturer. Duct entering ground boxes shall be placed so that the duct ends are not less than 127 mm or more than 229 mm from the box cover. Duct for duct cable is designed as a conduit system and shall be considered as such in NEC interpretations. Duct shall not be spliced. Ends of duct shall be cut neat and straight and shall be reamed to remove sharp edges.

B. After duct cable has been installed, a pull test will be made on conductors. If conductors cannot be freely pulled, Contractor shall replace or otherwise adjust installation to free up the conductors. Duct cable ends shall be sealed with approved compound or with heat-shrink material after pull test is completed.

C. Where noted on plans, duct cable shall be placed on a 51 mm sand cushion and backfilled with a minimum 152 mm of additional sand.

D. Duct cable shall be encased in conduit when shown on the plans. Duct cable shall be extended through the conduit casing in one continuous length.

X. GROUND BOX.

A. MATERIALS.

1. Ground boxes shall be concrete or polymer concrete, as required by the descriptive code shown elsewhere.
2. All precast ground boxes and covers shall be permanently marked with manufacturer's name or logo and manufacturer's model number.
3. Covers shall be bolted down. Bolt holes shall be arranged to drain dirt.
4. When steel covers are required, covers shall be provided with a grounding lug with 1/2 - 13 NC female threads on the underside of the cover.
5. Polymer Concrete boxes shall meet the following requirements:
   a. Boxes shall be manufactured from Reinforced Polymer Concrete (RPM) composed of borosilicate glass fiber, a catalyzed polyester resin and an aggregate. Side walls may be fiber reinforced polymer.
   b. Minimum inside dimensions shall be as follows (width x length x depth):
      Type A shall be 292 mm x 533 mm x 254 mm, (122311)
      Type B shall be 292 mm x 533 mm x 508 mm, (122322)
      Type C shall be 387 mm x 718 mm x 254 mm, (162911)
      Type D shall be 387 mm x 718 mm x 508 mm, (162922)
      Type E shall be 292 mm x 533 mm x 406 mm, (122317)
   c. Bottom edge of box or extension shall be footed with a minimum 32 mm flange.
   d. Ground boxes shall withstand a test loading of 9072 kg over a 254 mm by 254 mm area centered on the lid and 0.029 MPa load applied over the entire side wall. The model of ground box proposed shall have been tested by a laboratory independent of the manufacturer to meet loading requirements. Certification of such tests shall be submitted to the Engineer for approval.
   e. Covers shall be 51 mm (nominal) thick polymer concrete. Cover shall be secured with two 1/2 inch stainless steel bolts. Bolts shall be captive and shall withstand a minimum of 94.9 Nm torque and shall have a minimum 3.336 kN straight pull out strength. Covers shall be skid resistant, minimum 0.5 coefficient of friction. Covers shall be interchangeable between manufacturers and shall conform to the dimensions shown below. Cover shall be legibly imprinted with the words "Danger High Voltage" in minimum 25 mm letters. When required, other cover lettering shall be as shown elsewhere on the plans.

B. CONSTRUCTION METHODS.

1. Steel covers shall be bonded to grounding conductor with a 914 mm jumper.
2. Where indicated on the plans, ground box will be encased in concrete apron as detailed below. Construction of apron including concrete and reinforcing steel shall not be paid for directly but shall be subsidiary to the ground box. Field bending of reinforcing steel will be allowed.
3. A minimum gravel fill of 229 mm shall be placed under each ground box. Gravel shall be coarse aggregate grade No. 1 in accordance with Item 421.
4. The Contractor may cut the necessary conduit holes in box extensions only. Holes must be 457 mm or more below the cover.
5. Concrete for aprons shall be considered miscellaneous concrete for testing purposes.

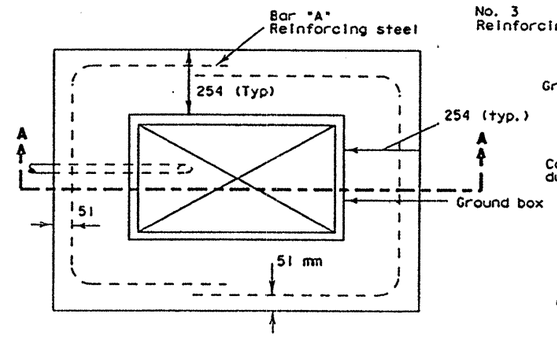

PLAN VIEW

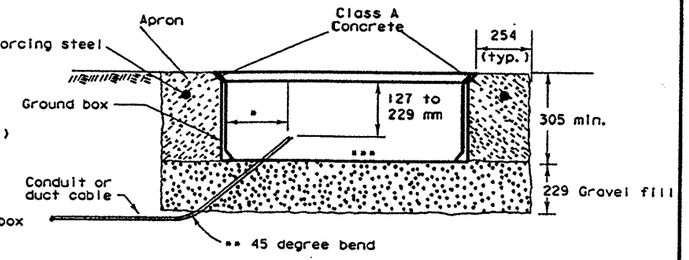

SECTION A - A

* Final position of end of conduit shall not exceed one-half of the distance to the side of the box opposite of the conduit entry.

** 90 degree when approved by the Engineer.

*** Place gravel "under" the box, not "in" the box. Gravel should not encroach on the interior volume of the box.

APRON FOR GROUND BOXES
(Where required)

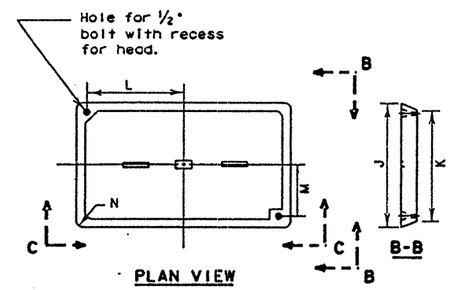

PLAN VIEW

B-B

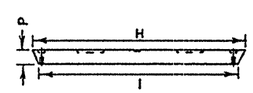

C-C

GROUND BOX COVER

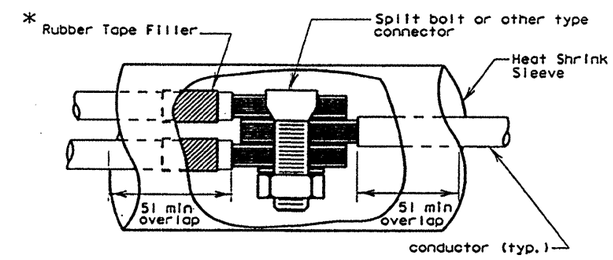

SPLICE DETAIL

* Tape filler required where two or more conductors enter one heat shrink tube to ensure watertight splice.

GROUND BOX COVER DIMENSIONS								
BOX	DIMENSIONS (INCHES)							
SIZE (WXL)	H	I	J	K	L	M	N	P
292 x 533	603.25	584.2	349.25	342.9	250.825	130.175	85.725	50.8
387 x 718	774.7	768.35	444.5	438.15	336.55	171.45	34.925	50.8

All dimensions are in millimeters unless otherwise noted.

STANDARD PLANS
TEXAS DEPARTMENT OF TRANSPORTATION
Traffic Operations Division

ELECTRICAL DETAILS- CONDUCTORS, DUCT CABLE, GROUND BOXES

ED(2)-93A(M)

ORIG. DRAWN DATE: January 1992	DN: KB	CK: TB	DW: RS	CK: TB	REV NO.:
REVISIONS: 5-93, 10-93, 1-96	STATE DISTRICT: 15	FEDERAL REGION: 6	FEDERAL AID PROJECT: CD 2452-135		SHEET: 260
	COUNTY: BEXAR		CONTROL: 2452	SECTION: 01	JOB: 035 HIGHWAY: LP1604

LEVELS DESIGNATED 1 2 3 4 5 6 7 8 9 10 11 12 13 14 15 16 17 18 19 20 21 22 23 24 25 26 27 28 29 30 31 32 33 34 35 36 37 38 39 40 41 42 43 44 45 46 47 48 49 50 51 52 53 54 55 56 57 58 59 60 61 62 63 64 65 66 67 68 69 70 71 72 73 74 75 76 77 78 79 80 81 82 83 84 85 86 87 88 89 90 91 92 93 94 95 96 97 98 99

DATE: 1 2 3 4 5 6
ACC: d58hp1a/~~~/d580504
FILE:

DN: LR
CK: CW
DW: DN
CK: MT

DISCLAIMER
The use of this standard is governed by the "Texas Engineering Practice Act". No warranty of any kind is made by TxDOT for any purpose whatsoever. TxDOT assumes no responsibility for the conversion of this standard to other formats or for incorrect results or damages resulting from its use.

ELECTRICAL SERVICES NOTES

Faulty fabrication or poor workmanship in any material, equipment, or installation will be considered justification for rejection. Materials and installation shall comply with the applicable provisions of the National Electrical Code (NEC) and National Electrical Manufacturers Association (NEMA) standards. Where manufacturers provide warranties and guarantees as a customary trade practice, Contractor shall furnish to the State such warranties or guarantees. The location of conductors, conduit, junction boxes, duct cable, ground boxes, and electrical services are diagrammatic only and may be shifted by the Engineer to accommodate local conditions.

All material shall be new and unused. Alternate material equal to or better than those specified may be substituted with the approval of the Engineer. The Contractor shall contact the utility company for metering requirements and any additional requirements and shall comply with all utility company requirements.

All work, materials, services, and incidentals, whether or not specifically shown on the plans, which may be necessary to obtain electrical power and for a complete and proper electrical service installation as shown on the plans, shall be performed, furnished and installed by the Contractor except that the costs involved in extending primary lines to electrical service locations will be paid for under Force Account work. When primary line extensions are required, the Contractor shall consult with the appropriate utility company to determine costs and requirements and shall coordinate the utility company's work as approved by the Engineer.

Lugs on circuit breakers and contactors shall be large enough to accept branch circuit conductors sized as shown on the plans. Where branch circuit conductors are enlarged to reduce voltage drop beyond the capacity of lugs, the lugs shall be changed or distribution blocks shall be installed in the service enclosure to splice branch circuit conductors to the maximum wire size for which the circuit breaker or lighting contactor is rated to accept.

1. Safety switch. Shall be placed ahead of meter, when switch is required. The switch shall be of the heavy duty type, unfused, NEMA 3R enclosure and equipped with a solid neutral (s/n) assembly. Switch shall be UL listed. Switches shall be rated 480 VAC (min.) for 240/480V services and rated 240 VAC (min.) for 120/240V services. The Contractor shall modify switch to allow padlocking in the "on" position.

2. Meter. Where metering is required, utility company will provide the meter base. The Contractor shall install the meter base.

3. Service Assembly Enclosure for Type A, B, and C. Enclosure shall be sized to provide adequate wiring space in accordance with NEC. All external screws shall be type 302 stainless steel. All enclosures shall be fitted with equipment-mounting panels installed inside enclosure on collar studs or tapped bosses. Panels shall be 2.66 mm-thick steel or 2.54 mm-thick aluminum, primed and painted white. All enclosure doors shall have stainless steel closure clamps and provisions for padlocking. Conduit entries into the top of enclosures shall have threaded hubs. Enclosure disconnect combination shall be UL listed and rated as service entrance equipment. Two 3.125 mm drain holes shall be placed in bottom of enclosure at opposite corners. All enclosures shall be permanently labeled "Danger High Voltage" on the front of the door, minimum one inch letters. The service pole descriptive code specifies that the enclosure shall be one of the following types.

   a. GS: Galvanized steel enclosures shall be NEMA 3R-rated, constructed of 1.9 mm-thick galvanized steel, with *piano hinged door, and drip shield.

   b. SS: Stainless steel enclosure shall be NEMA 3R-rated, with *piano hinged door, constructed of 1.9 mm-thick, Type 304 stainless steel. All hardware, including hinge pin, shall be stainless steel.

   c. AL: Aluminum enclosures shall be NEMA 3R-rated with *piano hinged door, constructed from 2.032 mm-thick aluminum. All hardware, including hinge pin, shall be stainless steel.

   d. NM: Non-metallic enclosures shall conform to NEMA standard for Type 3R enclosures and shall be constructed of molded fiberglass, PVC, or other material approved by the Engineer.

* A two or three point heavy duty hinge with stainless steel hinge pins may be used for load centers when approved by the Engineer.

4. Main Disconnect. Main disconnect device shall be a fusible switch or circuit breaker, as shown on Electrical Service Data Sheet. Switch shall be UL and NEMA-rated Type HD (heavy duty), flange mounted or front mounted in the service assembly enclosure. Switch shall be two pole, rate 240 volts or 480 volts as required. Switch shall have clips for Class R fuses. Circuit breaker shall be UL and NEMA-rated thermal-magnetic circuit breaker, flange-mounted or front mounted in the service assembly enclosure. Breaker shall be two-pole, (one-pole 480V for Ty. B), rated 480 volts or 240 volts as required. Circuit breakers shall have a minimum interrupting rating of 14,000 Amps. Voltage and amperage rating of switches and breakers shall be as shown elsewhere on Electrical Service Data Sheet. Switch and breaker handles shall be capable of padlocking in "On" and in "Off" positions. Main disconnect shall be operable from the outside of the enclosure and shall be interlocked to prevent the service assembly enclosure door from being opened with disconnect in the "On" position. The interlock shall have a manual override such that the main disconnect is capable of being turned "On" with the enclosure door open.

5. Lightning Arrester. Arresters shall be MOV-type secondary surge arresters rated 600 volts for 480V services and 175 volts for 120/240V services and shall meet ANSI, IEEE, UL, and NEMA Standards. Mounting brackets shall be provided for mounting the arresters inside the service assembly enclosures. Lightning arrester leads shall be run as straight and short as practical.

6. Fuse Blocks. Fuse blocks shall be rated 600 volts (min.) and shall accept a 10.3 mm x 38 mm fuse. Fuse blocks shall be furnished with integral insulated fusepuller and be suitable for mounting to the back panel of the enclosure. Fuse for 120/240 volt service shall be rated 250 volts (min.) and fuses for 480 volt service shall be rated 500 volts (min.). Fuses shall be 3 amp, dual-element (time-delay) fuses.

7. Control Transformer. Control transformer shall be rated 250 sealed VA and a minimum inrush rating of 1200 VA at 30 percent power factor. Voltage rating shall be 480-120 volts.

8. Control Station ("H-O-A" Switch). Control station shall be a maintained-contact, three position selector switch in a NEMA 1 enclosure. Switch shall be rated 600 volts and shall be fitted with "Hand-Off-Auto" legend.

9. Photo Electric Control. Photo electric control shall consist of a photocell, internal lightning arrester and relay mounted inside a weatherproof enclosure with standard 3-prong twist lock photocell plug and receptacle. The enclosure shall be made of poly-acrylic with clear acrylic window. Enclosure chassis shall be molded phenolic plastic. The photocell shall have a polyethylene gasket, and shall have a hermetically sealed cadmium sulfide cell. The arrester shall have an enclosed type expulsion arrester rated 2.0 KV sparkover with 10,000 amps follow-through. Relay shall be time delay type with normally closed contacts. Photo electric control shall be rated 1800 VA, 105-285 volts. Enclosure mounted photocells shall be the same as above except that the photocell shall be mounted inside the enclosure. The enclosure shall have two acrylic windows, or other material approved by the Engineer, one on each side of the enclosure. Each window shall be approximately 25 mm by 51 mm or as otherwise approved by the Engineer. The photocell shall be mounted in a position to receive light from one window.

   The Contractor shall be responsible for proper operation of the photo-electric control. The Contractor shall move and/or adjust or shield the photocell from stray or ambient nighttime light or shall make any other adjustments required for proper operation. The photocell shall face North when practicable. The photocell shall turn on the illumination system at 10.8 +(-) 5.4 lux and turn off the illumination system at twenty lux higher than turn on.

10. Lighting Contactor. Lighting contactor shall be a NEMA lighting contactor, two-pole, electrically held type designed to control high pressure sodium lighting loads, with silver alloy double break contacts rated at 480 volts or 600 volts.

11. Power Distribution Terminal Blocks. Power distribution terminal blocks shall be rated for 600 volts and shall be used for line side connections to branch circuit breakers where more than one circuit breaker is required. Lugs on blocks shall be properly sized for conductors being used. Only on conductor shall be placed under each lug.

12. Neutral/Ground Bus. Neutral/ground bus shall be a factory-made insulated, groundable bus with properly sized lugs for grounding and neutral conductors.

13. Branch Circuit Breakers. Unless otherwise shown on the plans, circuit breakers shall be the molded case thermal-magnetic type. Circuit breaker voltage shall be compatible with their use. Single pole circuit breakers mounted on high voltage (600V min.) insulating fabric shall be used for 480 volt type B service. Circuit breakers shall have a minimum interrupting capacity of 10,000 amps.

14. Circuit Breaker Panelboard. Panelboard shall be a commercial/industrial type with bolt-on branch circuit breakers in a NEMA 3R enclosure. Panelboard for Type C service shall be a MLO (Main Lugs Only) three-wire single phase, S/N panelboard. Panelboards shall be UL-listed and shall meet Federal Specification W-P-115b, Type I, Class I requirements and shall have a minimum of 12 one-pole spaces. Tandem and half-width breakers will not be allowed. Conduit entries into the top of enclosure shall have threaded hubs. Panelboards shall have dead front trim.

15. Load Center. Load center shall be a circuit breaker panelboard rated 120/240 volts three wire, single phase, S/N in NEMA 3R enclosure with main breaker. Load center shall have a minimum rating of 70 amps and shall have space for a minimum of six full size breakers. Tandem and half-width breakers will not be allowed. Load centers shall be UL listed, and shall meet Federal Specification W-P-115c, Type I, Class 2 requirements. Load center shall have a threaded hub conduit entry for conduit entering the top of the enclosure. Load centers shall have dead front trim and shall be rated as service entrance equipment. Load center enclosures shall meet the requirements of Note 3 paragraph a, b, c, or d above. External operating handle shall not be installed. Closure clamps will not be required.

EXPLANATION OF ELECTRICAL SERVICE DESCRIPTIVE CODE

ELEC SERV TY X (XXX/XXX) XXX (XX) XX (X) XX (X)

Schematic Type

Service Voltage (V_1, V_2)

Main Disconnect Amp Rating

SS= Safety switch ahead of meter
NS= No switch ahead of meter and/or no meter required

Enclosure Type
GS= Galvanized steel
SS= Stainless steel
AL= Aluminum
NM= Non-metallic

⚠ Photocell Location (when req'd) and Lightning Arrester Location
T= Top of pole
E= Enclosure mounted

Service Support Type
TP= Timber pole
SP= Steel pole
SF= Steel frame
OT= Pole by others or paid for separately
EX= Existing pole
TS= Switch gear to be placed on traffic signal pole
RT= Rectangular structural tubing

O= Overhead service
U= Underground service

Example: ELEC SERV TYD(120/240)070(NS)GS(T)TP(O)

All dimensions are in millimeters unless otherwise noted.

STANDARD PLANS
TEXAS DEPARTMENT OF TRANSPORTATION
Traffic Operations Division

ELECTRICAL DETAILS-ELECTRICAL SERVICES NOTES

ED(3)-93A(M)

Date: January 1992	DN-XS	CK-TB	DW-RS	CK-TB	
Revisions: 5-93, 10-93, 1-96	15	6	CD 2452-1-35		261
	BEXAR	2452	01	035	SPUR 604

DN: LR CK: CW DW: DN CK: MT
DATE:
ACC: d58hpic/us /30504
FILE:

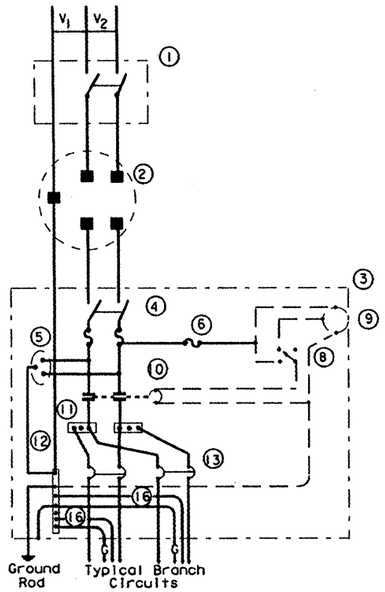

SCHEMATIC TYPE A

THREE WIRE

Maximum branch circuit size: 100 amps for two pole 480V, 125 amps for one or two pole 120V or 240V.

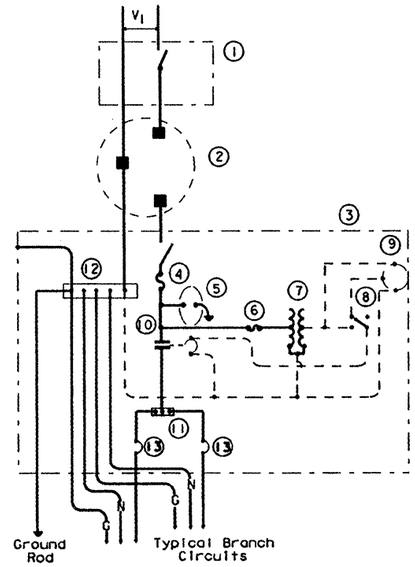

SCHEMATIC TYPE B

TWO WIRE

Maximum branch circuit size: 50 amps for one pole 480V, 125 amps for one pole 120V or 240V.

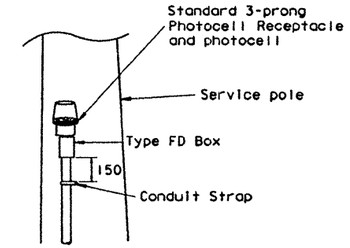

TOP MOUNTED PHOTOCELL

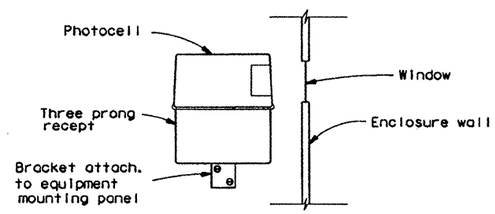

ENCLOSURE MOUNTED PHOTOCELL

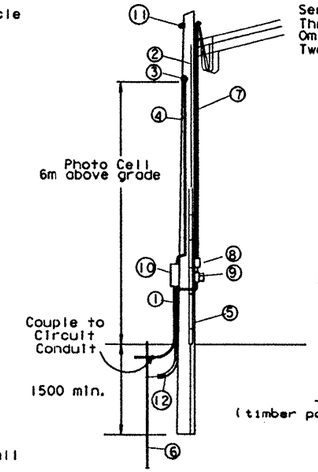

Service Drop from Utility
Three Wire Service Shown - Omit One Conductor for Two Wire Service

1 - RM conduit -same size as branch circuit conduit
2 - No. 6 bare ground wire to butt-wrap ground
3 - Photo Electric Control and 13 RM conduit - See detail
4 - Class 5 pole, 9.1m minimum or as otherwise required by NESC and utility company
5 - Ground wire moulding - 2.4m min.
6 - 16 X 2438 Copper clad ground rod
7 - Service conduit and conductors - See Electrical Service Data Sheet
8 - Safety switch (when required)
9 - Meter (when required)
10 - Service enclosure
11 - Lightning arrestor (top mounted)
12 - No. 6 bare grounding electrode conductor in 13 PVC to ground rod

SERVICE SUPPORT TYPE TP (O)

(timber pole, overhead service, typical arrangement)

TIMBER POLE NOTES

1. Conduit and conductors attached to service pole and underground within 305 mm of service pole shall not be paid for directly but shall be subsidiary to the service pole.
2. Install photo electric control on North side of pole or in service enclosure as required.
3. Attach service enclosure with galvanized channel (Unistrut, Kindorf, or equal). Gain pole two places to provide flat surfaces. Paint ends of channel with zinc rich paint.

SCHEMATIC LEGEND

1. Safety Switch (when required)
2. Meter (when required)
3. Service Assembly Enclosure
4. Main Disconnect (Switch or Breaker, See Electrical Service Data Sheet)
5. Lightning Arrestor
6. Fuse Block
7. Control Transformer (480-120 Volts) (for Type B only)
8. Control Station ("H-O-A" Switch)
9. Photo Electric Control (enclosure-mounted shown)
10. Lighting Contactor
11. Power Distribution Terminal Blocks
12. Neutral/Ground Bus
13. Branch Circuit Breaker (See Electrical Service Data Sheet)
14. Circuit Breaker Panelboard (See Electrical Service Data Sheet)
15. Load Center
16. Neutral conductor (when required)
    ——— Power Wiring
    - - - - Control Wiring
17. Surge Capacitor Westinghouse No 1N02180A05 General Electric No 9L18BAB301 Or Equal
18. See Detail 1

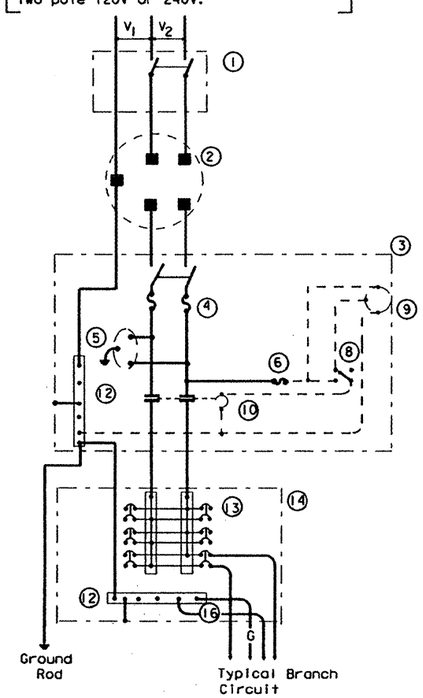

SCHEMATIC TYPE C

THREE WIRE

Maximum branch circuit size: 100 amps for two pole 480V, 125 amps for two pole 120V or 240V.

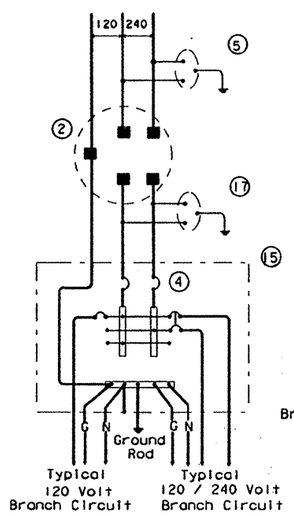

SCHEMATIC TYPE D

120/240 VOLTS - THREE WIRE

Install photocell and lighting contactor when shown on service pole summary.

TYPICAL SERVICE FOR OVERHEAD SIGN BRIDGE

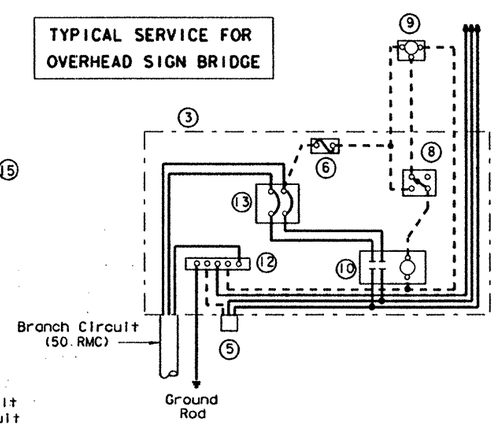

SERVICE ASSEMBLY ENCLOSURE

120 / 240 VOLTS - THREE WIRE

(To be mounted on Overhead Sign Bridge Leg)

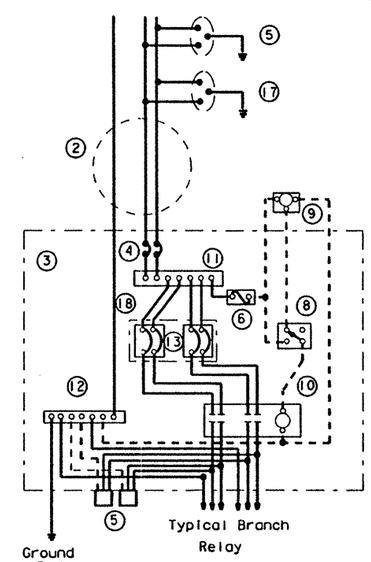

SCHEMATIC TYPE S

240/480 VOLTS - THREE WIRE

12/95

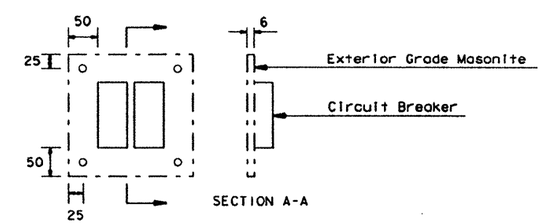

DETAIL 1

The attachment of the masonite to the enclosure shall be as approved by the Engineer.

ELECTRICAL SERVICE SCHEMATICS
ELECTRICAL SERVICE SUPPORT TYPE TP (OVERHEAD)

All dimensions are in millimeter unless otherwise noted.

STANDARD PLANS
TEXAS DEPARTMENT OF TRANSPORTATION

ELECTRICAL DETAILS
ED (4) - 93A(M)
SAN ANTONIO DISTRICT

ORIGINAL DRAWING DATE: DECEMBER 1995	STATE DISTRICT	FEDERAL REGION	FEDERAL AID PROJECT				SHEET
REVISIONS	SAT	6	CD 2452 01 035				262
	COUNTY		CONTROL	SECTION	JOB	HIGHWAY	
	BEXAR		2452	01	035	I.P. 1604	

STRUCTURAL DESIGN
/BRIDGE/STDS/ed493a15.dgn

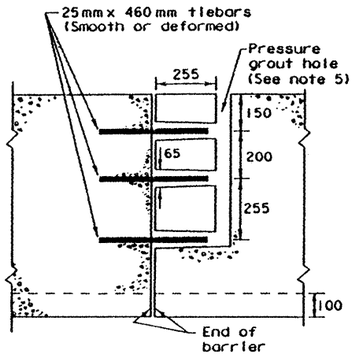

SECTION THROUGH ℄ AT JOINT
MALE-FEMALE DESIGN OPTION

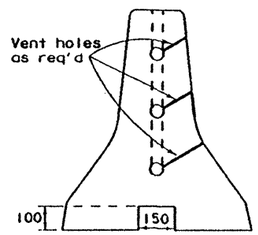

END VIEW
MALE-FEMALE DESIGN OPTION

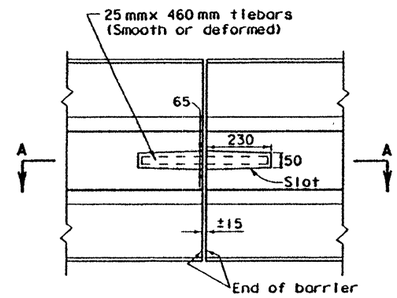

PLAN
SLOTTED DESIGN OPTION

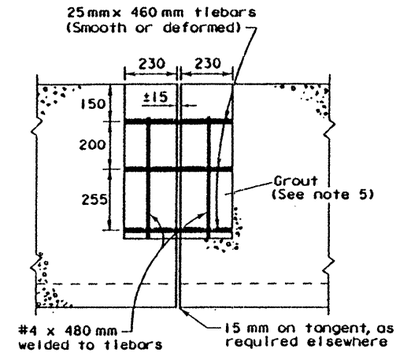

SECTION A-A (THROUGH ℄ AT JOINT)
SLOTTED DESIGN OPTION

JOINT TYPE A

GENERAL NOTES

1. Where illumination is to be placed on concrete traffic barrier, a 3050 mm cast-in-place section shall be provided at each light pole location as shown on sheet CTB1(3). Pole, anchor bolt, and other illumination details are shown on sheet CTB1(4).
2. Concrete shall be class C or H.
3. Regardless of the method of handling, barrier section lifting points shall be 1905 mm from the ends of the barrier. Lifting devices and attachments to barrier sections shall be as approved by the Engineer.
4. For Joint Type A barrier that is installed in a temporary location, tiebars should be placed in the slot when the slot design option is used or, for the male-female design option, the male-female connections should be mated. Neither of the optional joint types should be grouted for temporary locations of barrier.
5. When installed in a permanent roadway location, end connections of the Joint Type A barrier shall be grouted with a mixture of two parts sand and one part cement with enough water to make the mixture plastic. Grouting shall be done in a manner that will assure a smoth surface at the joint.
6. Surface finishing and grouting (where required) shall be considered subsidiary to the various bid items involved.
7. All steel fittings for Type B barrier shall be galvanized after fabrication.
8. Barrier length shall be 9140 mm ± unless specified elsewhere in the plans.
9. Forms shall be constructed of steel. Edges of barrier shall be rounded or chamfered as shown on sheet PCTB(2).
10. The contractor has the option of placing precast (Joint Type A or B) or cast-in-place Type 2 Concrete Traffic Barrier as shown on sheet CTB(2) unless otherwise shown in the plans.

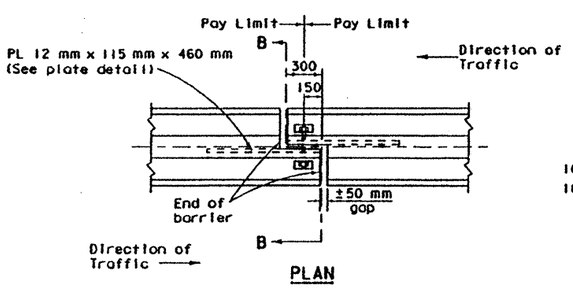

PLAN
END DETAIL

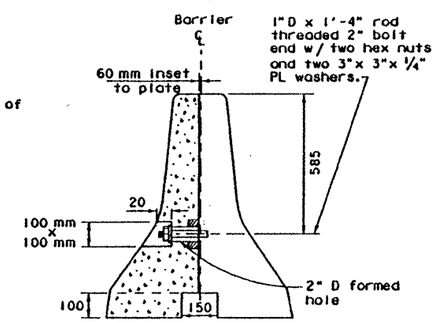

SECTION B-B

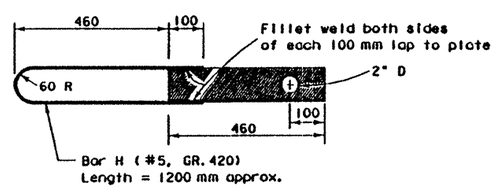

Note: Plates conform to ASTM A36 steel

PLATE DETAIL

JOINT TYPE B

R = Radius
D = Diameter

All unit-less dimensions are millimeters

Texas Department of Transportation
Design Division (Roadway)

PRECAST CONCRETE TRAFFIC BARRIER TYPE 2

PCTB(1)-95(M)

FILE: PCTB195M.DGN	DN: GTH	CK: GTH	DW: BCD	CK: TGM	FED. RD. DIV. NO.
ORIG. DATE:	DIST	FED. RD.	PROJECT		SHEET
REVISIONS	15	6	CD2452-1-35		263
	COUNTY		CONTROL	SECT	JOB	HIGHWAY
	BEXAR		2452	01	035	UP1604

DISCLAIMER:
The use of this standard is governed by the "Texas Engineering Practice Act". No warranty of any kind is made by TxDOT for any purpose whatsoever. TxDOT assumes no responsibility for the conversion of this standard to other formats or for incorrect results or damages resulting from its use.

LEVELS DISPLAYED

Configurations of welded wire fabric other than as shown in the WWF Detail will be permitted when the conditions tabulated below are satisfied.

DESCRIPTION	LONGITUDINAL WIRES	VERTICAL WIRES
1. Wire type	Deformed	Smooth or Deformed
2. Minimum (cumulative total) wire area	800 sq. mm	80 sq. mm per longitudinal 305 mm (req'd only in end 1015 mm of precast sections)
3. No. of wires Minimum Maximum	 6 14	 4 at 305 mm CC ea. precast end 12 at 102 mm CC ea. precast end
4. Bending radius	n/a	Minimum radius = two vertical wire diameters
5. Wire placement a. Top wire	Not less than 4 nor more than 5 vertical wire dia. from the upper bends in the vertical wires	n/a
b. Bottom wire	100 mm (±10 mm) from bottom of barrier	n/a
c. Other wires	Uniformly and symmetrically spaced along faces of barrier	Minimum spacing 102 mm Maximum spacing 305 mm
6. Maximum wire size differential	The smaller wire shall have an area of 40% or more of the larger wire.	

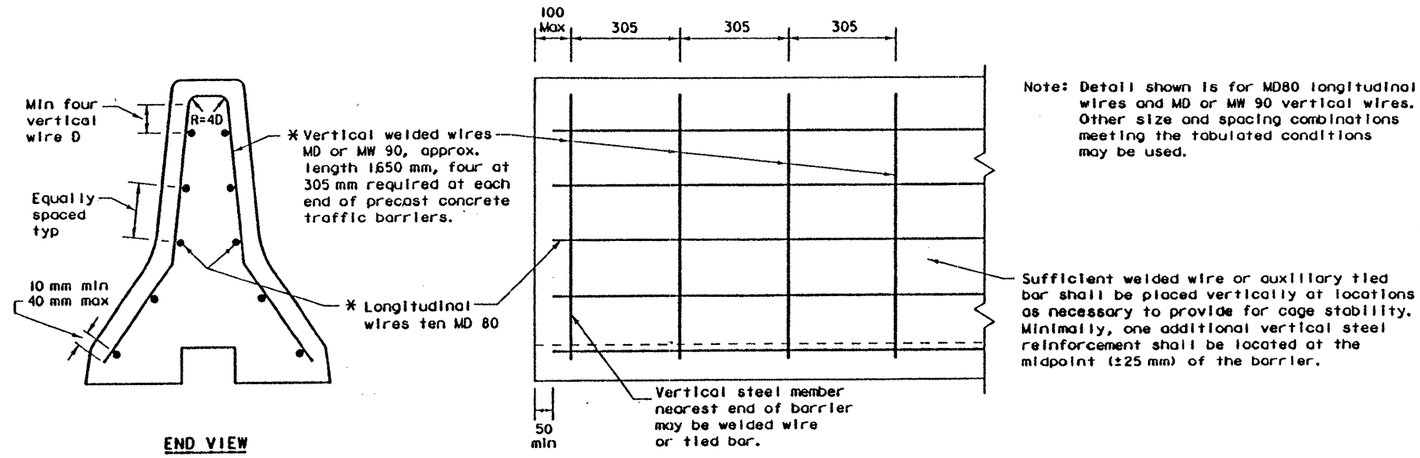

END VIEW

ELEVATION VIEW

Note: Detail shown is for MD80 longitudinal wires and MD or MW 90 vertical wires. Other size and spacing combinations meeting the tabulated conditions may be used.

Sufficient welded wire or auxiliary tied bar shall be placed vertically at locations as necessary to provide for cage stability. Minimally, one additional vertical steel reinforcement shall be located at the midpoint (±25 mm) of the barrier.

DETAILS OF WELDED WIRE FABRIC OPTION

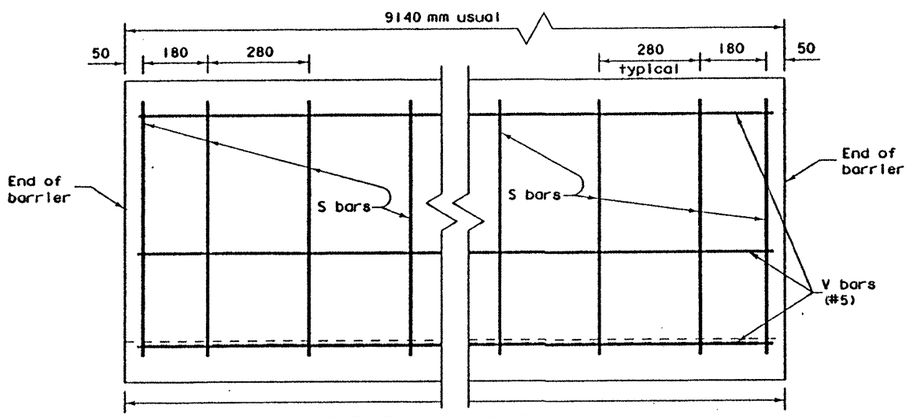

ELEVATION OF BARRIER

Additional vertical steel shall be provided as necessary to properly position steel and stabilize rebar cage.

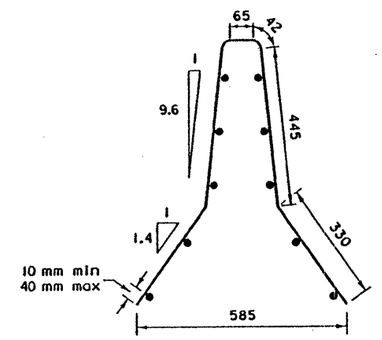

VERTICAL WIRE DETAILS

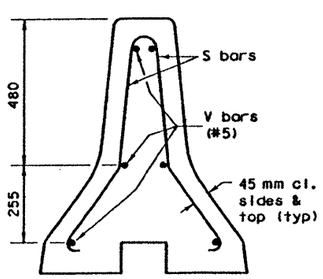

SECTION NEAR END OF BARRIER

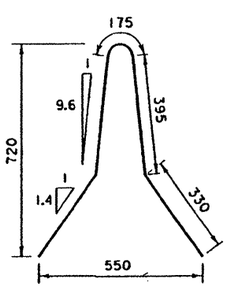

BARS S (#4) (Grade 300)

DETAILS OF REBAR OPTION

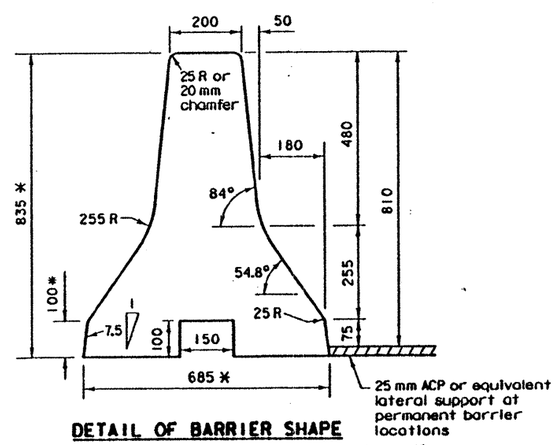

DETAIL OF BARRIER SHAPE

* When 25 mm ACP is not used for lateral support, these dimensions shall be adjusted accordingly.

R = Radius
D = Diameter

All unit-less dimensions are millimeters

GENERAL NOTES

1. Where used, rebar reinforcement shall conform to ASTM A-615 (Grade 300).
2. Barrier length shall be 9140 mm ± unless otherwise specified in plans.
3. All concrete, reinforcement, joint connection systems, grout, and etc. as shown are considered as part of the barrier for payment.

# Approximate P.L.M. quantities		
Concrete	m^3	0.3
Rebar	kg	10
Welded wire fabric	kg	7

For Contractor's information only
Weight of one 9140 mm unit = approximately 6500 kg

Texas Department of Transportation
Design Division (Roadway)

PRECAST CONCRETE TRAFFIC BARRIER TYPE 2

PCTB(2)-95(M)

FILE: PCTB295M.DGN	DN: GTH	CK: GTH	DW: RAR	CK: TGM	NEG:
ORIG DATE:	DIST	FED REG	[redacted] PROJECT #		SHEET
REVISIONS	15	6	CD 2452-1-35		263A
	COUNTY		CONTROL	SECT	JOB	HIGHWAY
	BEXAR		2452	01	035	L1604

DISCLAIMER:
The use of this standard is governed by the "Texas Engineering Practice Act". No warranty of any kind is made by TxDOT for any purpose whatsoever. TxDOT assumes no responsibility for the conversion of this standard to other formats or for incorrect results or damages resulting from its use.

LEVELS DISPLAYED

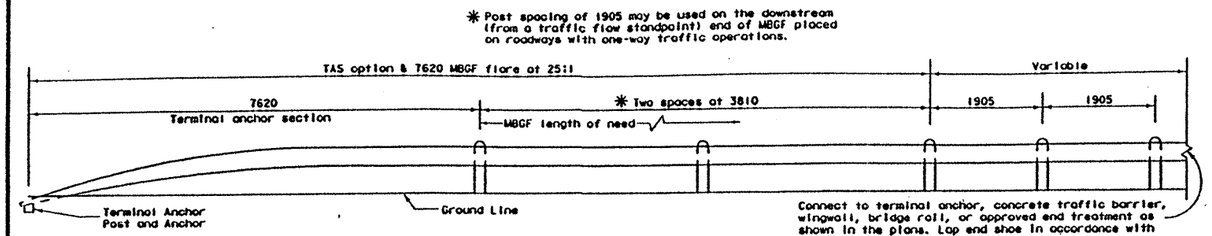

ELEVATION

Note ①: Where a nominal length of 1830 is specified as acceptable elsewhere in the plans, these dimensions shall be increased by 135. The additional length should be specified only on roadways where future ACP overlays and adjustments of the rail height on the same posts are likely.

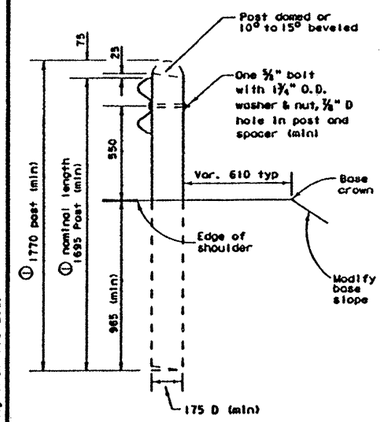

WOOD POST

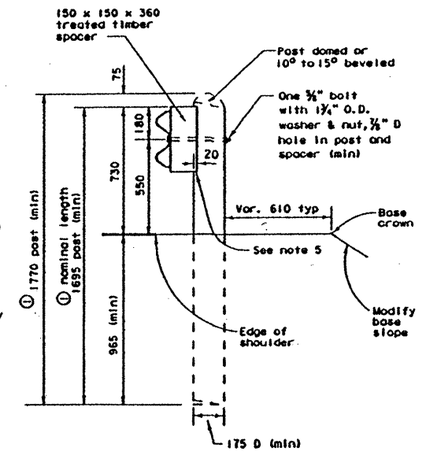

WOOD POST
(Blockout)

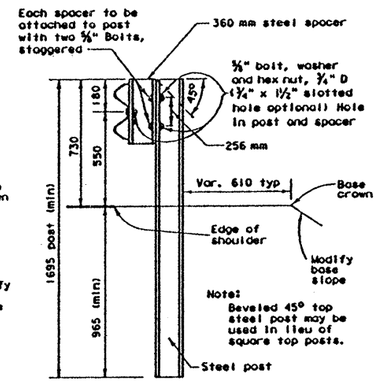

STEEL POST
(Blockout)

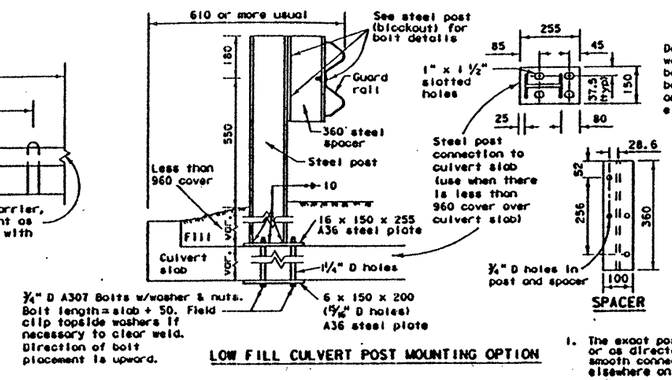

LOW FILL CULVERT POST MOUNTING OPTION

SPACER

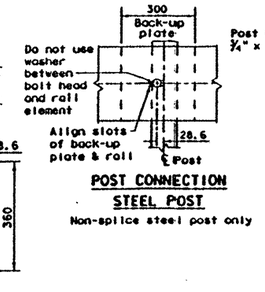

POST CONNECTION
STEEL POST
Non-splice steel post only

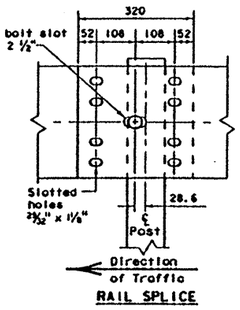

RAIL SPLICE

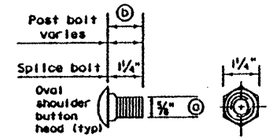

CONNECTOR DETAIL

ⓐ ⅝" hex bolts required for terminal connector

ⓑ 1¼" spacer to steel post hex bolt. 2" rail to spacer button head bolt.

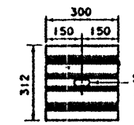

BACK-UP PLATE

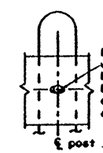

POST CONNECTION
WOOD POST

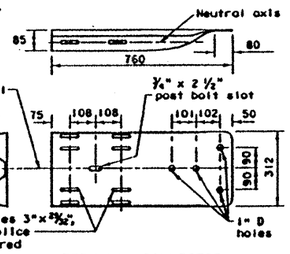

TERMINAL CONNECTOR
(3.43 Section Width)

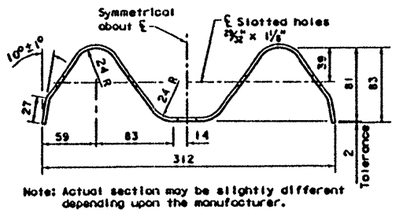

Note: Actual section may be slightly different depending upon the manufacturer.

SECTION THRU GUARD RAIL

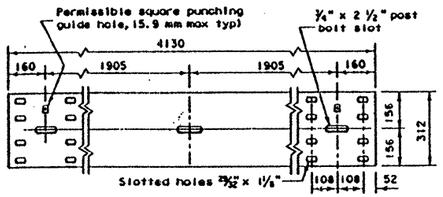

ELEVATION OF NOMINAL
3810 mm GUARD RAIL

(7620 mm sections may also be supplied)

GENERAL NOTES

1. The exact position of guard fence shall be as shown elsewhere on the plans or as directed by the Engineer. Guard fence shall be transitioned to a smooth connection with other guard fence or structure railing as shown elsewhere on plans.
2. Unless otherwise shown in the plans, guard fence placed in the vicinity of curbs shall be blocked out so that the face of curb is located directly below or behind the face of rail. Rail placed over curbs shall be installed so that the post bolt is located approximately 550 mm above the gutter pan or roadway surface.
3. Unless otherwise shown in the plans, MBGF shall be placed with the face of rail directly above the shoulder edge (or curbface) except the 7620 mm Terminal Anchor Section and adjacent 7620 mm of MBGF shall be flared at 25:1 (longitudinal:lateral) to provide a 600 mm offset between buried anchor and shoulder edge (or curbface). Flaring the 7620 mm Terminal Anchor and adjacent 7620 mm MBGF is optional for one-way traffic conditions on the downstream end of guard fence.
4. At the option of the Contractor, the rail elements for the guard fence may be be furnished in either 3810 mm or 7620 mm nominal lengths with post bolt slots for connection to posts.
5. Timber posts may be beveled from 10 to 15 degrees on the top of both ends with high side of top of post placed toward the roadway or they may be domed. When blockout guard fence is specified elsewhere in the plans, a 150 mm x 150 mm x 360 mm treated timber spacer of yellow pine shall be used with wood posts. When "blocked out", the upper portion of the post shall be notched 20 mm to provide flat surface for timber spacer. A tolerance of ±3 mm will be permitted on the notched portion of the post. Routing the timber spacer may be used in lieu of notching the post. The depth of routing shall be 20 mm at the center of radius ±3 mm.
6. Steel posts shall be blocked out. Steel posts and spacers shall meet the requirements of ASTM A-36 (W150 x 13.5 or W150 x 12.6). Bolt holes shall be placed as indicated on Spacer detail.
7. Post spacing will be 1905 mm except that the first post will be 7620 mm from the terminal anchor post and the next two posts spaced at 3810 mm with a minimum of 8 posts adjacent to structures spaced at 952.5 mm and posts adjacent to Type T6 bridge rail are spaced at 1905 mm. Post spacing adjacent to structures may vary as shown on bridge rail details or as directed by the Engineer.
8. The upper 250 mm (minimum) of the terminal anchor post and all steel fittings thereon shall be galvanized.
9. The terminal anchor post shall be set in Class "A" concrete (unless otherwise shown on plans) in accordance with item, "Portland Cement Concrete". Concrete shall be subsidiary to the bid item requiring construction of the terminal rail section and anchorage system.
10. An anchor other than to a terminal anchor post shall consist of a connection similar to the rail splice or similar to the terminal connector.
11. Back-up plates shall be provided at intermediate (non-splice) steel posts. Back-up plates shall conform to the materials and galvanizing requirements specified for the rail element, and shall be of the same nominal thickness as the rail element used.
12. Washers used with the eight ⅝" splice bolts and nuts that are provided for terminal connectors and/or anchor posts shall be ¾" x 3" x ⅜" rectangular washers (ASTM A 36) or as designated by the Engineer.
13. The 10 Gauge terminal connectors must be used with the optional terminal anchor post. Either anchor post may be used with either concrete anchor.
14. Welded steel posts and spacers shall meet the requirements of ASTM A-36. The flange width and thickness, web thickness, and depth of welded posts and spacers shall equal or exceed the dimensions of a standard rolled W150 x 13.5 or W150 x 12.6.
15. Special fabrication will be required at installations having a curvature of less than 45 meter radius.
16. Bolts shall be of sufficient length to extend through the full thickness of the nut and no more than 20 mm beyond it. (Button head bolts may be used instead of hex bolts when specified by the Engineer.) Fittings (bolts, nuts, and washers) shall be in accordance with item, "Metal For Structures". Fittings shall be subsidiary to the bid item requiring construction of MBGF or Terminal Anchor Section.
17. Crown will be widened to accommodate guard fence.
18. Where solid rock is encountered or where shown on the plans, the diameter of the holes shall be approximately 305 mm, the backfilling shall be with a cohesionless material, and embedment depth shall be 460 mm or more as directed by the Engineer. Timber posts shall not be set in concrete.

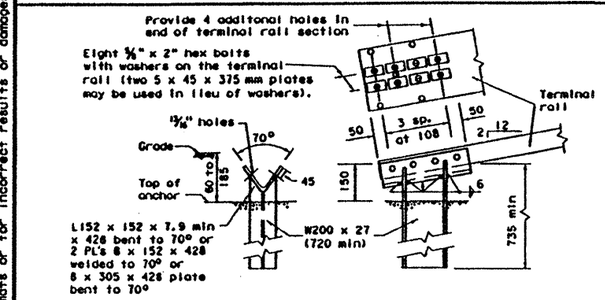

Note: This post requires four additional holes (shop or field) in the terminal rail member with eight ⅝" bolts and washer plates as shown for attachment.

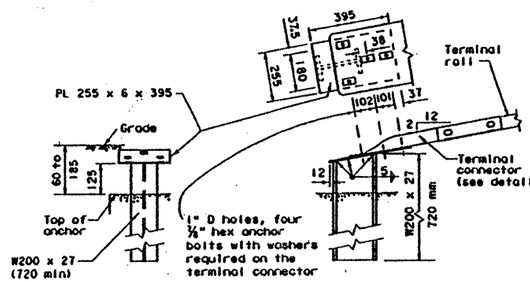

Note: This optional post requires the use of the 10 gauge terminal connector with four ⅛" hex bolts for attachment to the anchor post.

TERMINAL ANCHOR POST OPTIONS

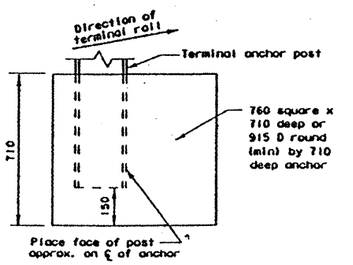

Notes: Either post may be used with either anchor.

No construction joint is allowed in the concrete anchor.

Terminal rail may be bolted to post and in twist position prior to placing concrete anchor.

If concrete anchor is precast, the area should be compacted as directed by the Engineer, when placed in the field.

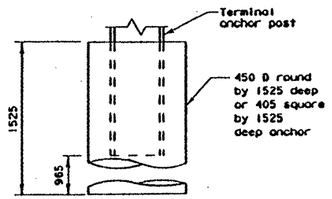

TERMINAL CONCRETE ANCHOR OPTIONS

R = Radius
D = Diameter

All unit-less dimensions are millimeters

Texas Department of Transportation
Design Division (Roadway)

METAL BEAM GUARD FENCE

MBGF-95A (M)

FILE: MBGF95AM.DGN	DN: GTH	CK: GTH	DW: RAR	CK: TGM	MEG:	
ORIG DATE:	DIST	FED REG	[redacted]	PROJECT #		SHEET
REVISIONS	15	6	CD 2452-1-35			264
	COUNTY		CONTROL	SECT	JOB	HIGHWAY
	BEXAR		2452	01	056	LI604

DISCLAIMER:
The use of this standard is governed by the "Texas Engineering Practice Act". No warranty of any kind is made by TxDOT for any purpose whatsoever. TxDOT assumes no responsibility for the conversion of this standard to other formats or for incorrect results or damages resulting from its use.

LEVELS DISPLAYED

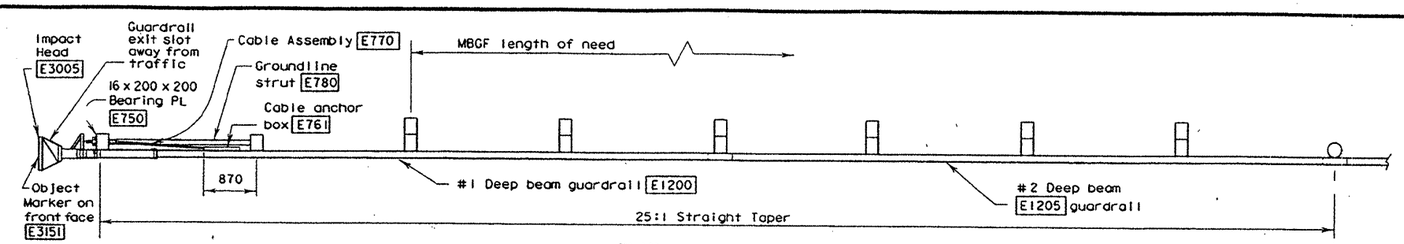

PLAN

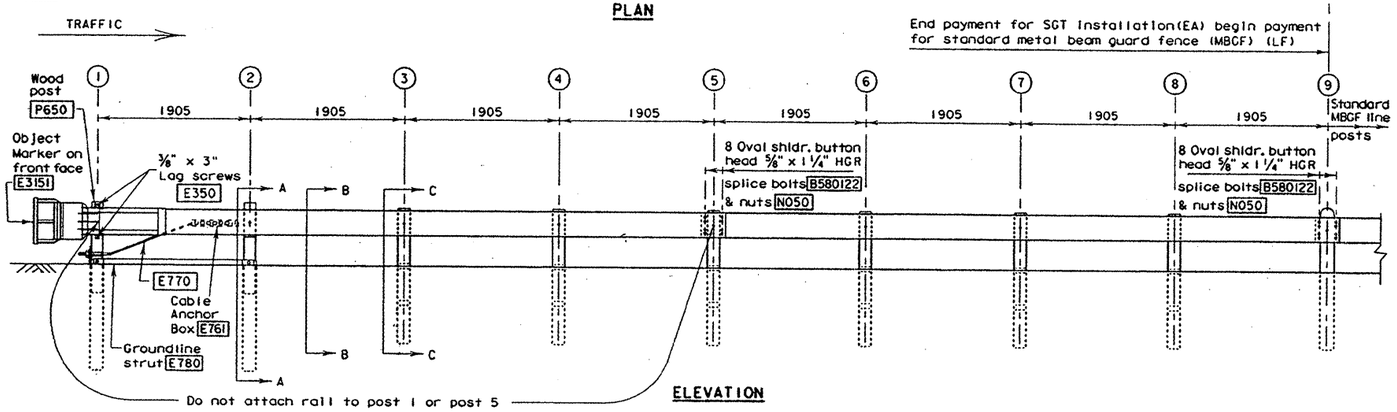

ELEVATION

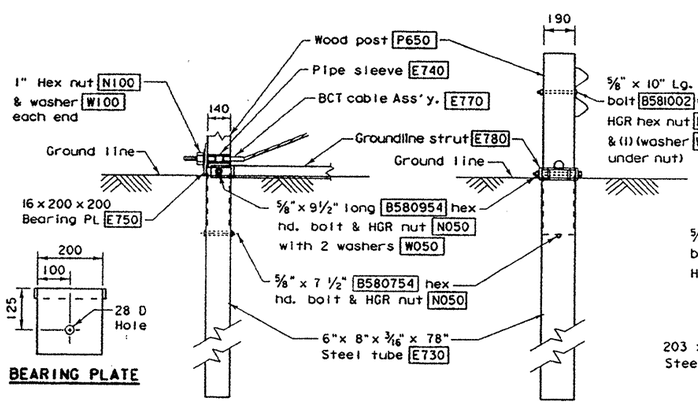

BEARING PLATE

PARTIAL VIEW AT POST #1

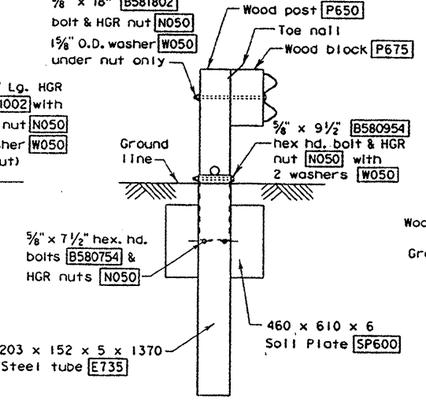

SECTION A-A
(at post #2)

SECTION B-B
(Typ. at post and tube positions)

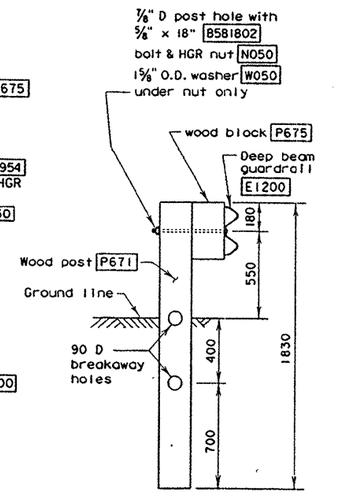

SECTION C-C
(Typ. at post only positions)

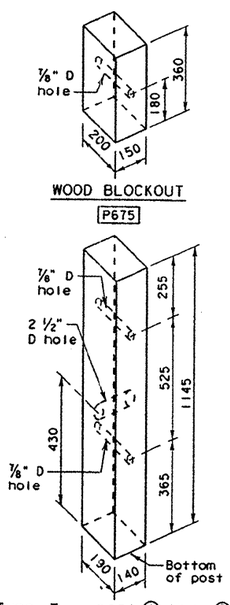

Type I - post ① thru ②
Type II - post ① thru ④
Type III - post ① thru ⑧
All measurements should be taken from bottom of posts.

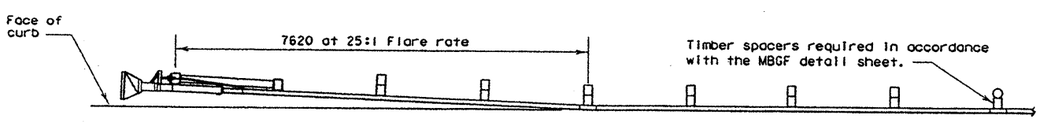

DETAIL A
Placement at curbed locations

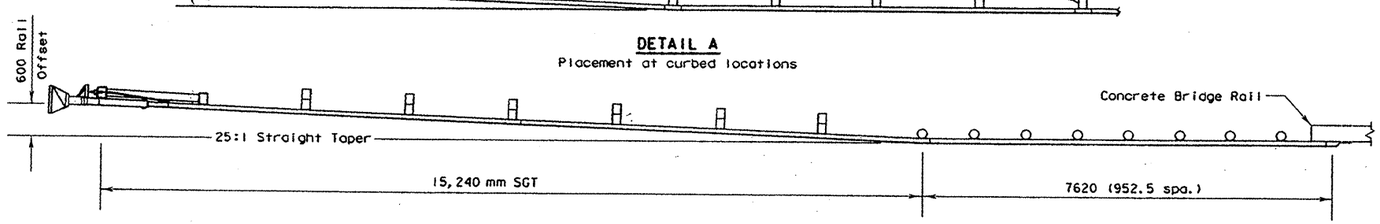

DETAIL B
Usual minimum placement to protect concrete bridge ends

GENERAL NOTES

1. The type of SGT unit will be specified elsewhere in the plans. (Numbers in circles indicate post position.)

	Post & Tube	Post Only
Type I	Posts ① thru ②	Posts ③ thru ⑧
Type II	Posts ① thru ④	Posts ⑤ thru ⑧
Type III	Posts ① thru ⑧	None

2. Wood posts are required with this guardrail end treatment.
3. All bolts, nuts cable assemblies, cable anchors, steel tubes & bearing plates shall be galvanized.
4. For non-curb installations, the MBGF will be flared at a rate of 25:1 over the first 15240 mm of the system to prevent the terminal head from encroaching on the shoulder. The flare may be decreased or eliminated for specific installations if directed by the Engineer. A 25:1 flare rate will be used at curb sections, beginning at post number 5 and ending at post number one.
5. The steel tubes shall not protrude more than 100 mm above ground. Site grading may be necessary to meet this requirement.
6. The steel tubes may be driven with an approved driving head. They shall not be driven with the wood post in the tube. If the steel tubes are placed in drilled holes, the backfill material must be satisfactorily compacted to prevent tube settlement.
7. When rock excavation is encountered, a 305 mm diameter post hole, 510 mm deep may be used if approved by the Engineer. Granular material will be placed in the bottom of the hole approximately 65 mm deep to provide drainage. The steel tube sleeves will be field cut to 510 mm in length, placed in the hole and backfilled with adequately compacted material excavated from the hole.
8. The breakaway cable assembly must be taut. A locking device, (vice grips or channel lock pliers) should be used to prevent the cable from twisting when tightening the nuts.
9. The wood blockouts shall be "toe nailed" to the rectangular wood posts to prevent them from turning when the wood shrinks.
10. For curb installations, the soil tubes and posts shall be installed at the proper ground elevation behind the curb. The posts will then require field drilling new holes to accommodate the rail to post connection bolt to maintain the proper height of the rail above the gutter pan. The excess post length above the rail will be removed if directed by the Engineer.
11. An object marker shall be installed on the front of the impact head as detailed on D&OM(VIA).
12. A special site evaluation should be considered, prior to using this end treatment where there is less than 7620 mm between the outlet side of the end treatment and any adjacent driving lane.

BILL OF MATERIAL

Code #	Type I Qty.	Type II Qty.	Type III Qty.	DESCRIPTION
E1200	1	1	1	#1 Deep Beam Guardrail (8090 mm)(12 Ga.)
E1205	1	1	1	#2 Deep Beam Guardrail (7938 mm)(12 Ga.)
E730	2	2	2	Steel Tube - 203 x 152 x 5 x 1980
E735	0	2	6	Steel Tube - 203 x 152 x 5 x 1370
SP600	0	2	6	Soil Plate - 460 x 610 x 6
P650	2	4	8	Wood Posts - 140 x 190 x 1145
P671	6	4	0	Wood CRT Posts - 150 x 200 x 1830
P675	6	6	6	Wood Blockouts - 150 x 200 x 360
E740	1	1	1	Pipe Sleeve - 50 mm Std. Pipe x 140 mm
E750	1	1	1	Bearing Plate - 16 x 200 x 200
E761	1	1	1	Cable Anchor Box
E770	1	1	1	Cable Assembly
E780	1	1	1	Groundline Strut
E3005	1	1	1	Impact Head
HARDWARE				
B580754	2	6	14	5/8" x 7 1/2" Hex Hd. Bolt
B580954	2	4	8	5/8" x 9 1/2" Hex Hd. Bolt (Top of Tubes)
W050	11	15	23	5/8" Washers
B581002	1	1	1	5/8" x 10" HGR Post Bolt (Post 2)
B580122	16	16	16	5/8" x 1 1/4" HGR Splice Bolt
B581802	6	6	6	7/8" x 18" HGR Post Bolt (Posts ③ thru ⑧)
N050	27	33	45	5/8" HGR Nut (16-Spl, 7-Posts, 2-Strut, 2 ea. at Tube ③ thru ⑧)
E350	2	2	2	3/8" x 3" Lag Screw
N100	2	2	2	1" Hex Nut (Anchor Cable)
W100	2	2	2	1" Washer (Anchor Cable)
E3151	1	1	1	Object Marker - (450 x 450)

R = Radius
D = Diameter
All unit-less dimensions are millimeters

Texas Department of Transportation
Design Division (Roadway)

SINGLE GUARDRAIL TERMINAL
(BEST 350)

SGT(5)-97(M)

FILE: SGT597M.dgn	DN: MAM	CK: MAM	DW: BR	CK: MAM	NEG:
ORIG DATE: FEBURARY 1997	DIST	FED REG	PROJECT #		SHEET
REVISIONS	15	6	CD2452-1-35		265
	COUNTY		CONTROL	SECT	JOB	HIGHWAY
	BEXAR		2452	01	035	1604

DISCLAIMER
The use of this standard is governed by the "Texas Engineering Practice Act". No warranty of any kind is made by TxDOT for any purpose whatsoever. TxDOT assumes no responsibility for the conversion of this standard to other formats or for incorrect results or damages resulting from its use.

LEVELS DISPLAYED

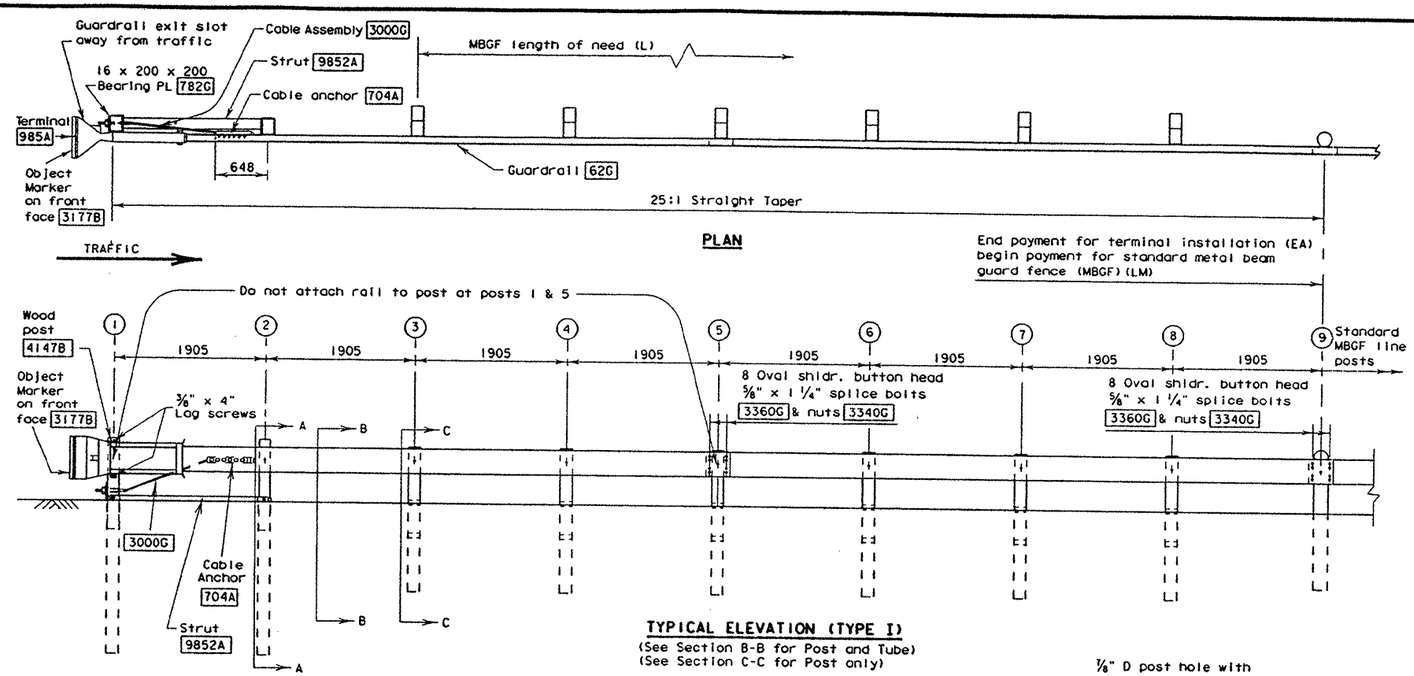

TYPICAL ELEVATION (TYPE I)
(See Section B-B for Post and Tube)
(See Section C-C for Post only)

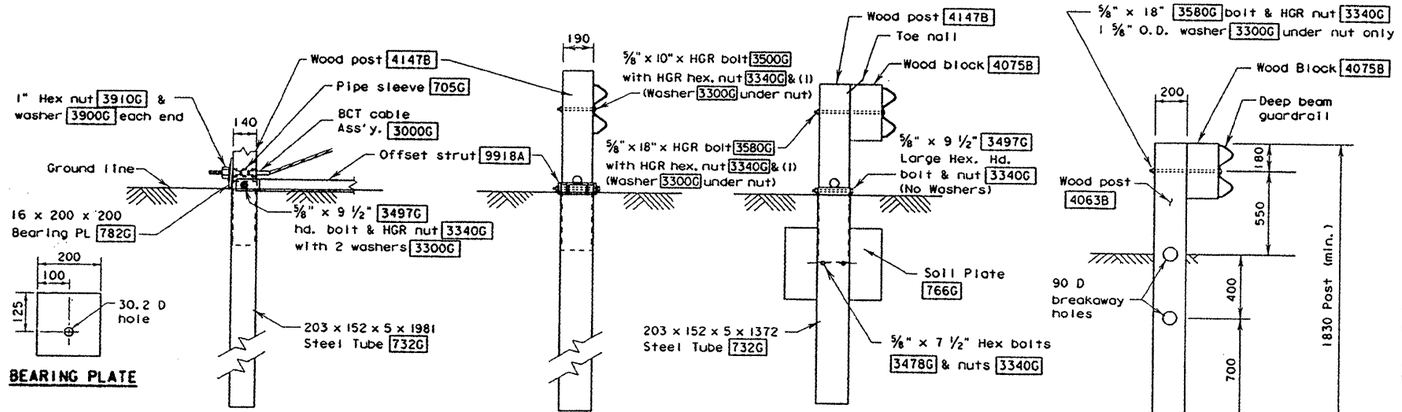

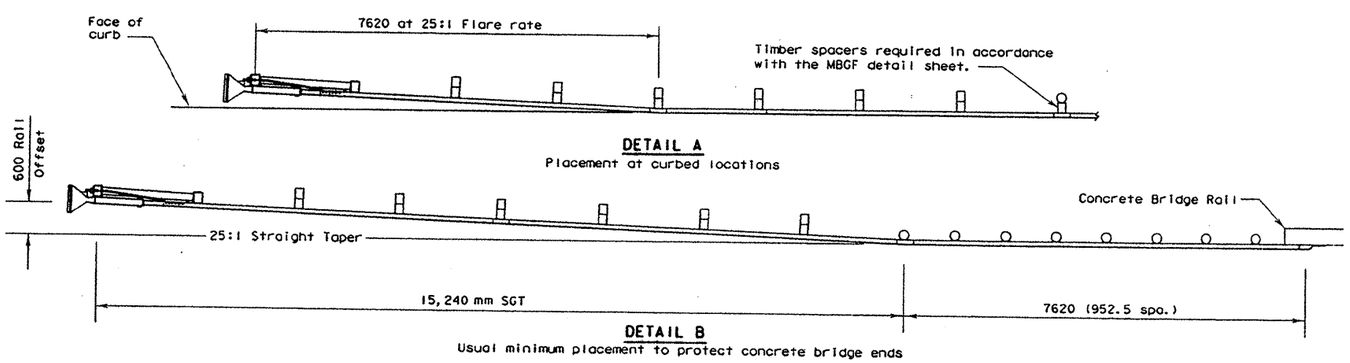

GENERAL NOTES

1. The type of SGT unit will be specified elsewhere in the plans. (Numbers in circles indicate post position.)

	Post & Tube	Post Only
Type I	Posts ① thru ②	Posts ③ thru ⑧
Type II	Posts ① thru ④	Posts ⑤ thru ⑧
Type III	Posts ① thru ⑧	None

2. Wood posts are required with this guardrail end treatment.
3. All bolts, nuts cable assemblies, cable anchors, steel tubes & bearing plates shall be galvanized.
4. For non-curb installations, the MBGF will be flared at a rate of 25:1 over the first 15240 mm of the system to prevent the terminal head from encroaching on the shoulder. The flare may be decreased or eliminated for specific installations if directed by the Engineer. A 25:1 flare rate will be used at curb sections, beginning at post number 5 and ending at post number one.
5. The steel tubes shall not protrude more than 100 mm above ground. Site grading may be necessary to meet this requirement.
6. The steel tubes may be driven with an approved driving head. They shall not be driven with the wood post in the tube. If the steel tubes are placed in drilled holes, the backfill material must be satisfactorily compacted to prevent tube settlement.
7. When rock excavation is encountered, a 305 mm diameter post hole, 510 mm deep may be used if approved by the Engineer. Granular material will be placed in the bottom of the hole approximately 65 mm deep to provide drainage. The steel tube sleeves will be field cut to 510 mm in length, placed in the hole and backfilled with adequately compacted material excavated from the hole.
8. The breakaway cable assembly must be taut. A locking device, (vice grips or channel lock pliers) should be used to prevent the cable from twisting when tightening the nuts.
9. The wood blockouts shall be "toe nailed" to the rectangular wood posts to prevent them from turning when the wood shrinks.
10. For curb installations, the soil tubes and posts shall be installed at the proper ground elevation behind the curb. The posts will then require field drilling new holes to accommodate the rail to post connection bolt to maintain the proper height of the rail above the gutter pan. The excess post length above the rail will be removed if directed by the Engineer.
11. An object marker shall be installed on the front of the impact head as detailed on D&OM(VIA).
12. A special site evaluation should be considered, prior to using this end treatment where there is less than 7620 mm between the extrusion side of the end treatment and any adjacent driving lane.

Type I - post ① thru ②
Type II - post ① thru ④
Type III - post ① thru ⑧
All measurements should be taken from bottom of posts.

BILL OF MATERIAL

Code #	Type I Qty.	Type II Qty.	Type III Qty.	DESCRIPTION
62G	1	1	1	#1 Deep Beam Guardrail (12 Ga) at 7620 mm
60G	1	1	1	#2 Deep Beam Guardrail (12 Ga) at 7620 mm
732G	2	2	2	Steel Tube - 203 x 152 x 5 x 1981
740G	0	2	6	Steel Tube - 203 x 152 x 5 x 1372
766G	0	2	6	Soil Plate - 460 x 610 x 6
4147B	2	4	8	Wood Posts - 140 x 190 x 1145
4063B	6	4	0	Wood CRT Posts - 150 x 200 x 1830
4075B	6	6	6	Wood Block - 150 x 200 x 360
705G	1	1	1	Pipe Sleeve - 50 mm std. pipe x 140 mm
782G	1	1	1	Bearing Plate - 16 x 200 x 200
704A	1	1	1	Cable Anchor
3000G	1	1	1	Cable Assembly (19 x 1981)
9852A	1	1	1	Inline Strut
985A	1	1	1	ET-2000 Guardrail Terminal
HARDWARE				
3497G	2	4	8	⅝" x 9 ½" Hex Hd. Bolt (Top of tubes)
3300G	11	15	23	⅝" Washers
3478G	2	6	14	⅝" x 7 ½" Hex Bolt
3500G	1	1	1	⅝" x 10" Post Bolt (post 2)
3580G	6	6	6	⅝" x 18" HGR Post Bolt (posts ③ thru ⑧)
3360G	16	16	16	⅝" x 1 ¼" HGR Splice Bolt
3340G	27	33	45	⅝" HGR Nut (16-spl, 7-posts, 2-strut, 2 each at tube ③ thru ⑧)
4228G	2	2	2	⅜" x 4" Lag Screw
3910G	2	2	2	1" Hex Nut (Anchor Cable)
3900G	2	2	2	1" Washer (Anchor Cable)
3177B	1	1	1	Object Marker (450 x 450)

R = Radius
D = Diameter
All unit-less dimensions are millimeters

Texas Department of Transportation
Design Division (Roadway)

SINGLE GUARDRAIL TERMINAL

(ET-2000 & ET-2000 LET)

SGT(6)-97(M)

FILE: sgt697m.dgn	DN: GTH	CK: GTH	DW: BGD	CK: MAM	NEC:
ORIG DATE: MAY 1991	DIST	FED REG	[redacted] PROJECT		SHEET
REVISIONS	15	6	CD2452-1-35		266
	COUNTY		CONTROL	SECT	JOB	HIGHWAY
	BEXAR		2452	01	035	L1604

LEVELS DISPLAYED

DISCLAIMER:
The use of this standard is governed by the "Texas Engineering Practice Act". No warranty of any kind is made by TxDOT for any purpose whatsoever. TxDOT assumes no responsibility for the conversion of this standard to other formats or for incorrect results or damages resulting from its use.

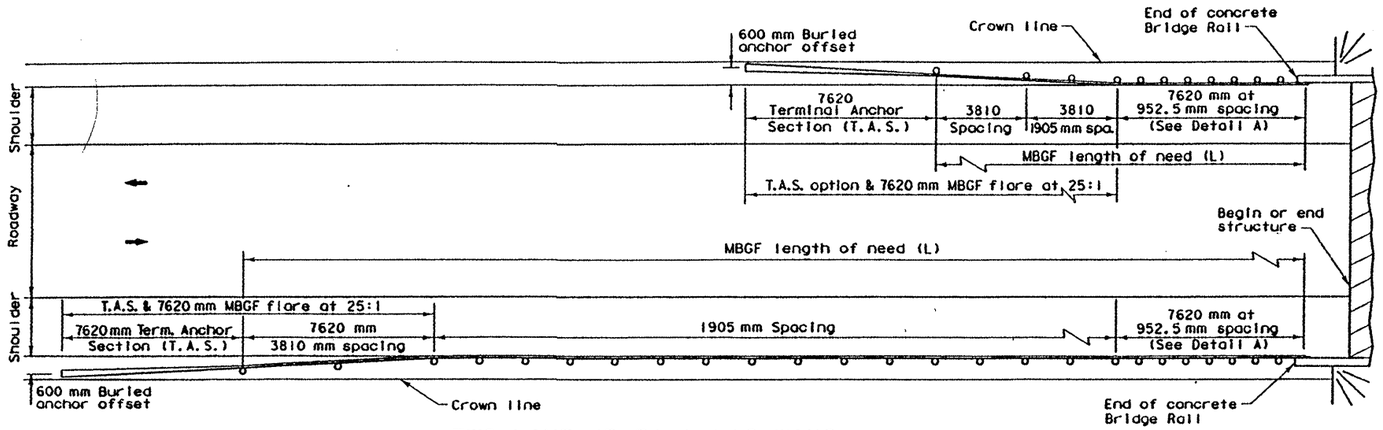

TWO LANE (RURAL) HIGHWAYS

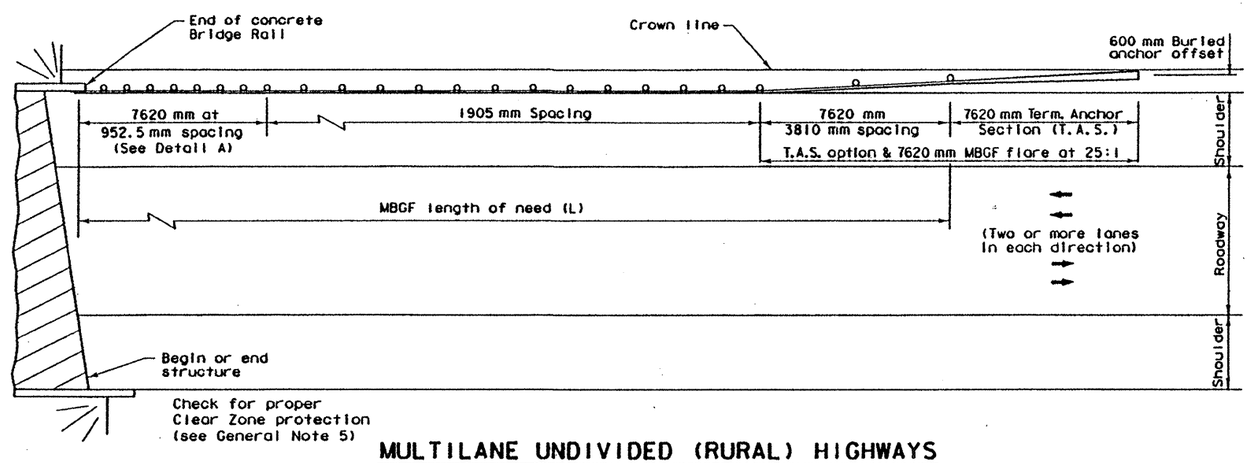

MULTILANE UNDIVIDED (RURAL) HIGHWAYS

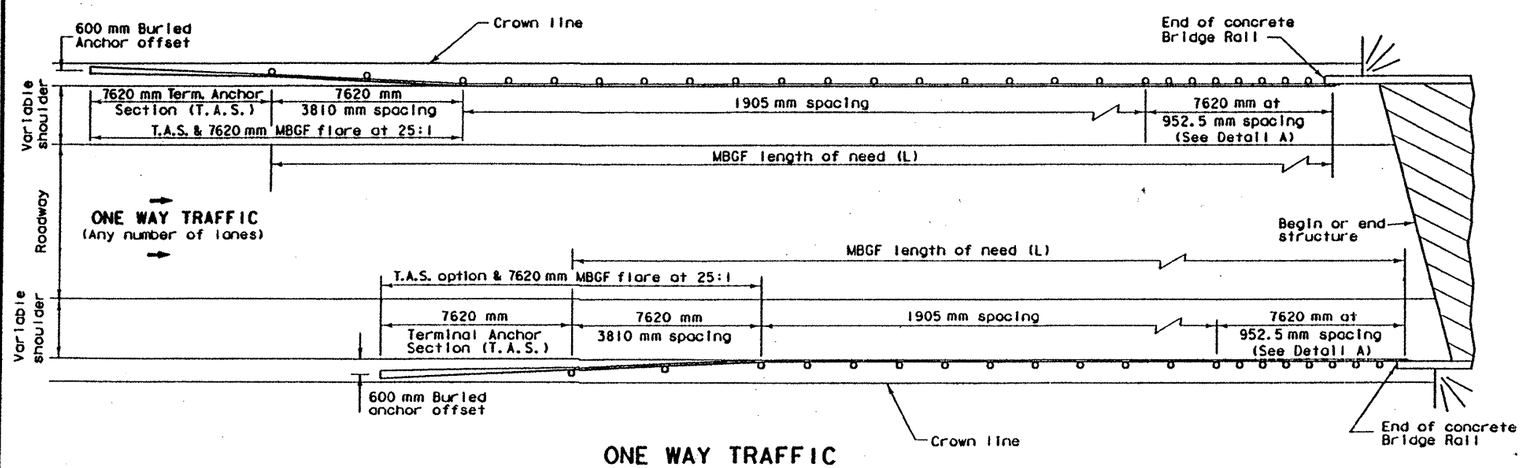

ONE WAY TRAFFIC

GENERAL NOTES

1. For metal beam guard fence details, see MBGF plan sheet.
2. Quantities of metal beam guard fence (MBGF) at individual bridge ends are shown elsewhere in plans.
3. Use average daily traffic (ADT) for the current year to determine MBGF length of need in accordance with the Operations and Procedures (Design) Manual unless otherwise specified. Where significant traffic volume growth is anticipated on low volume (0-750 ADT) highways use length determinations for the higher volume category.
4. Where length (L) of MBGF used is 15,240 mm, post spacing shall be as detailed hereon (See plan layout for two lane (rural) highways, left side of traffic approaching bridge). Where length (L) of MBGF is 22,860 mm or more, post spacing shall be 952.5 mm for the 7620 mm section adjacent to the bridge, 3810 mm for the 7620 mm section ajacent to the T.A.S., and 1905 mm for the remaining intervening length. When T6 bridge rail is used, the min. MBGF post spacing shall be 1905 mm.
5. MBGF may not be required to shield departure end of bridge unless other hazards within the clear zone warrant MBGF. Where installed on the departure end, 1905 mm post spacing is acceptable throughout the placement length including adjacent to bridge end.
6. When specified, the T.A.S. and typically adjacent 7620 mm MBGF should be flared from the shoulder edge at 25:1 (longitudinal:lateral) to provide a 600 mm usual offset to buried anchor.
7. When end treatments other than T.A.S. are used, post spacing shall be 952.5 mm for the 7620 mm section adjacent to the bridge and 1905 mm for the remaining length of need. See the end treatment detail sheet(s) for additional information.
8. The crown will be widened to accommodate MBGF. Typically the crown line should be 610 mm from the back of the MBGF post. This applies to new construction on new alignment or where existing roadway cross section is to be widened to increase roadway width. This does not apply to rehabilitation work where existing roadway crown width is to be retained (See Typical Cross Section).
9. For restrictive width bridges, a 7620 mm tangent section of MBGF should connect to the wingwall. The adjoining MBGF that lies within the roadway (Lanes & Shoulder area) crown should be flared at the rate of 25:1 (Longitudinal : Lateral). Length at these bridges should be determined as stated above or the length necessary to locate the buried anchor at a 600 mm offset from shoulder edge, whichever is greater.
10. Variations in post spacings and/or the use of spacer blocks or shims may be required by the Engineer in order to accommodate the required rail connection to existing structures.

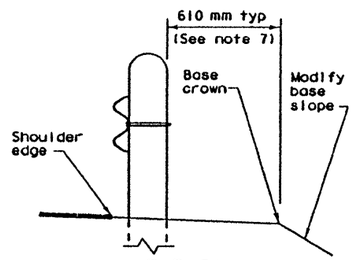

TYPICAL CROSS SECTION

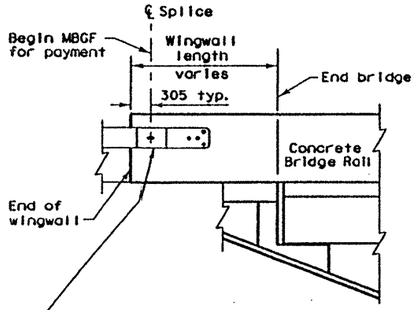

Typical connection, use 7/8" hex head bolts with washers under nut and bolt head (See Bridge Rail or other plansheets for details of MBGF to Bridge Rail connection).

DETAIL A

R = Radius
D = Diameter

All unit-less dimensions are millimeters

Texas Department of Transportation
Design Division (Roadway)

BRIDGE END DETAILS

BED-95 (M)

FILE: BED95M.DGN	DN: GTH	CK: GTH	DW: BCD	CK: TCM	NEG:	
ORIG DATE: SEPT. 1991	DIST	FED REG	PROJECT			SHEET
REVISIONS	15	6	CD2452-1-35			267
	COUNTY		CONTROL	SECT	JOB	HIGHWAY
	BEXAR		2452	01	035	L1604

DISCLAIMER:
The use of this standard is governed by the "Texas Engineering Practice Act". No warranty of any kind is made by TxDOT for any purpose whatsoever. TxDOT assumes no responsibility for the conversion of this standard to other formats or for incorrect results or damages resulting from its use.

LEVELS DISPLAYED

DISCLAIMER
The use of this standard is governed by the "Texas Engineering Practice Act". No warranty of any kind is made by TxDOT for any purpose whatsoever. TxDOT assumes no responsibility for the conversion of this standard to other formats or for incorrect results or damages resulting from its use.

PROJECT LIMIT TRAFFIC CONTROL DEVICES

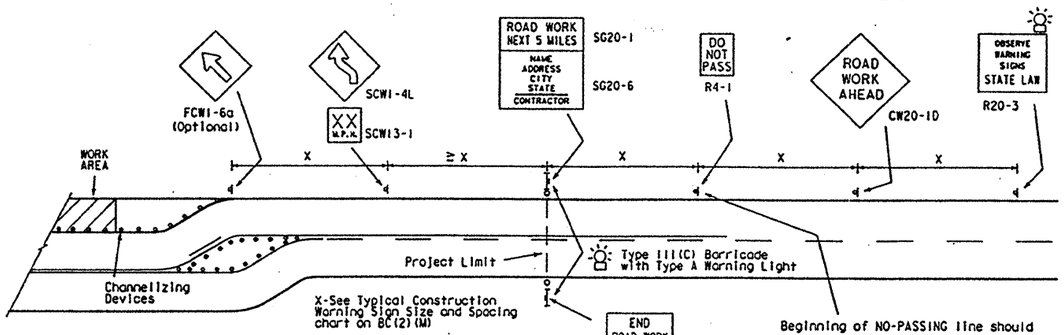

PROJECT LIMITS ADJACENT TO WORK AREA

(Less than 600 meters between project limits and work area)

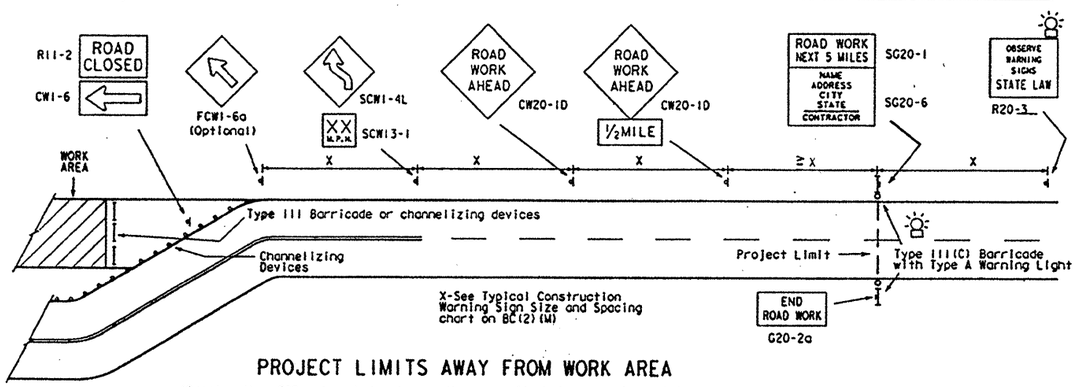

PROJECT LIMITS AWAY FROM WORK AREA

(Greater than 600 meters but not more than one mile between project limits and work area)

PROJECT LIMIT GENERAL NOTES

SIGNS AND WARNING LIGHTS

1. Except when specified elsewhere in the plans, a warning light for a sign may be attached to the sign support.
2. Appropriate standard traffic control devices shall be used as required by the plans. Any variation in the plans shall be documented by written agreement between the Engineer and the contractor's responsible person.
3. As a general rule, additional traffic control devices in advance of the project limits should only be used in those cases where a work area, a detour, or a potentially hazardous location is less than 600 meters inside the project limits.
4. The traffic control devices used in the above illustrations are examples only. Field conditions should dictate the most appropriate traffic control devices to be used.
5. As detailed above and on sheet BC(2)(M), the ROAD WORK NEXT X MILES, CONTRACTOR and END ROAD WORK signs shall be erected at or near the project limits and the OBSERVE WARNING SIGNS STATE LAW sign shall be erected in advance of the project limits. These signs should be adjusted to provide adequate spacing to other signs.
6. With the agreement of an adjacent project Engineer, the Engineer(s) may allow the omission of END ROAD WORK, OBSERVE WARNING SIGNS, and other advance warning signs if the signing would be redundant and the work areas appear continuous to the motorists. If the adjacent project is completed first, the contractor will erect the necessary warning signs as shown on these sheets, the TCP sheets or as directed by the Engineer.
7. Duplicate construction warning signs should be erected on the median side of divided highways where median width will permit and traffic density justifies the signing.
8. Except for devices required by Note 5, traffic control devices should be in place only while work is actually in progress or a definite need exists.
9. Sign size should be based on the "Texas Manual on Uniform Traffic Control Devices for Streets and Highways" (TMUTCD).

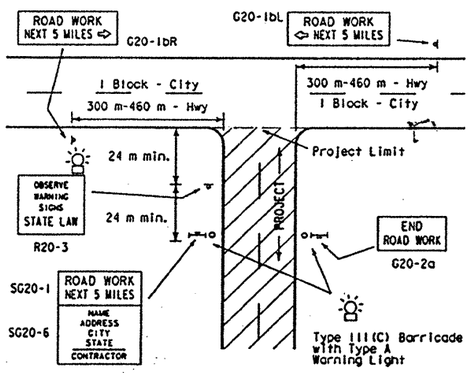

PROJECT LIMITS AT T-INTERSECTION

1. The ROAD WORK NEXT X MILES sign should be erected on the intersected highway as detailed above.
2. On the intersected roadway, additional traffic control devices, such as a flagger and accompanying signs or other signs, should be used when work is being performed at or near the intersection.

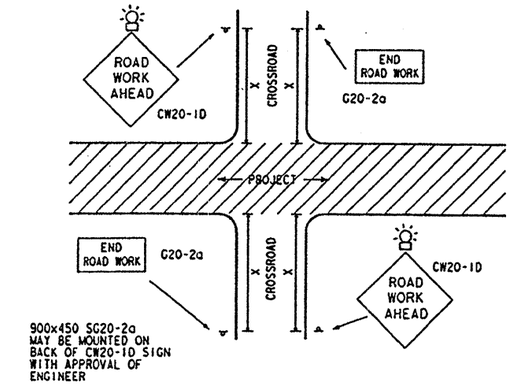

CROSSROAD SIGNING AND BARRICADING

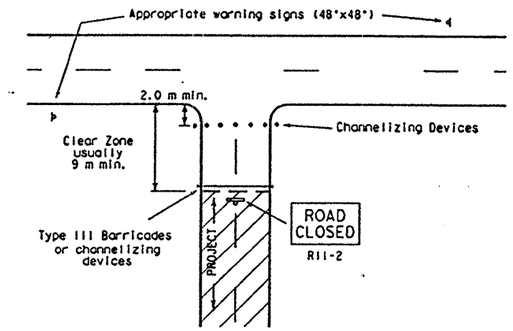

PROJECT LIMITS FOR CLOSED ROADWAY

Barricades shall be erected completely across roadway. Channelizing Devices may be drums, vertical panels or cones as specified in the plans.

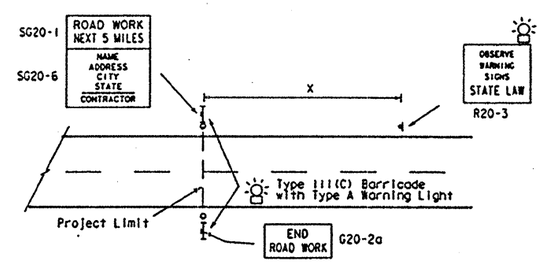

PROJECT LIMITS AWAY FROM WORK AREA

(Greater than 1.6 km between project limits and work area)

It is the intent of these plans to provide positive guidance to motorists throughout the project limits by the use of signs, pavement markings, delineation devices and/or channelizing devices. All traffic control devices shall conform with the "Texas Manual on Uniform Traffic Control Devices for Streets and Highways."

Required Warning Lights unless otherwise specified in the plans, or as directed by the Engineer.

CROSSROAD SIGNING AND BARRICADING

1. Except as noted elsewhere in plans, the usual minimum signing on a crossroad approach should be one CW20-1D ROAD WORK AHEAD sign and G20-2a END ROAD WORK sign. Where speeds and volumes are relatively low, a smaller ROAD WORK AHEAD sign may be used.

When approved by the Engineer, on low volume crossroads, advance warning signs may be the reduced size 900 x 900 "ROAD WORK AHEAD" (CW20-1D) sign mounted back to back with the reduced size 600 x 450 "END ROAD WORK" (SG20-2a) sign. See the SHSD manual and BC(6)(M) for sign design details. Advance signing may be omitted if approved by the Engineer.

Additional signs such as FLAGGER AHEAD, LOOSE GRAVEL, or other appropriate signs may be required. When additional signs are required, such signs will be considered part of the minimum requirements.

2. The G20-1a sign shall be required on major crossroads to advise motorists of the length of construction in either direction from the intersection.
3. On higher volume crossroads additional traffic control devices may be noted elsewhere in the plans.
4. When work occurs in the intersection area, appropriate traffic control devices shall be in place.

WARNING LIGHTS

Flashing and steady burn warning light usage shall be as specified elsewhere in the plans, these standard sheets or as directed by the Engineer. Warning lights shall meet the requirements of the "Texas Manual on Uniform Traffic Control Devices for Streets and Highways."

Type A-Low Intensity Flashing Warning Lights are commonly mounted on signs and/or barricades. They are intended to warn of an approaching potentially hazardous area. Flashing warning lights shall not be used in a series.

Type B-High Intensity Flashing Warning Lights are normally used at/or approaching potentially hazardous site conditions within the construction area. As these lights are effective in daylight as well as dark, they are designed to operate 24 hours per day. Flashing warning lights shall not be used in a series.

Type-C Steady Burn Lights are intended to be used in a series for delineation to supplement other traffic control devices.

When required by the Engineer the Contractor shall furnish a copy of the warning lights certification. The certification will be by the manufacturer, stating the lights meet the requirements of the latest ITE Purchase Specifications for Flashing and Steady-Burn Warning Lights.

TYPICAL MINIMUM SIGN CLEARANCES FIXED SIGN SUPPORTS

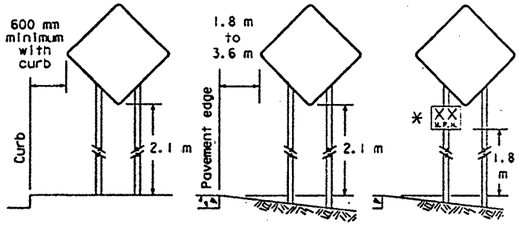

* Supplemental plaque shall be same color as parent sign. (See BC(4)(M)).

All dimensions are in millimeters unless otherwise noted.

STANDARD PLANS
TEXAS DEPARTMENT OF TRANSPORTATION
Traffic Operations Division

BARRICADE AND CONSTRUCTION STANDARDS

ADVANCE SIGNING
CROSSROAD SIGNING
WARNING LIGHTS

BC(1)-97(M)

ORIG. STAND. DATE: APRIL 1988	DN:	CK:	DW: DN	CK: CW	MSC. NO.:
REVISIONS: 6-88 1-97, 7-89, 4-92, 2-94	STATE DISTRICT: 15	FEDERAL REGION: 6	FEDERAL AID PROJECT: CH 2452 - I-35		SHEET: 248
	COUNTY: BEXAR		CONTROL: 0015	SECTION: 01	JOB: 025

DISCLAIMER
The use of this standard is governed by the "Texas Engineering Practice Act". No warranty of any kind is made by TxDOT for any purpose whatsoever. TxDOT assumes no responsibility for the conversion of this standard to other formats or for incorrect results or damages resulting from its use.

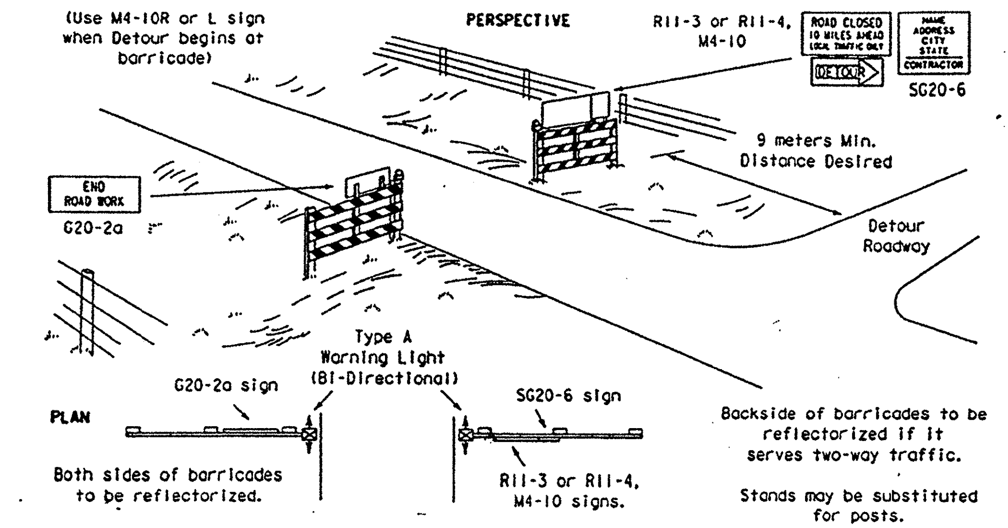

TYPE III(A) BARRICADE

1). The plan shown above is to be used when local traffic is permitted inside project or permitted to use the road beyond the intersection with the detour roadway. Other signs and barricades (Type I, II or III) may be required inside the project limits based upon the contractor's sequence of work and other conditions.

2). Where conditions will permit, minimum length of barricade on each side of roadway should be 3.6 meters.

3). First barricade panel on each side of roadway should be approximately level.

4). Advance signing, including construction warning signs, and detour signing shall be as specified elsewhere in the plans.

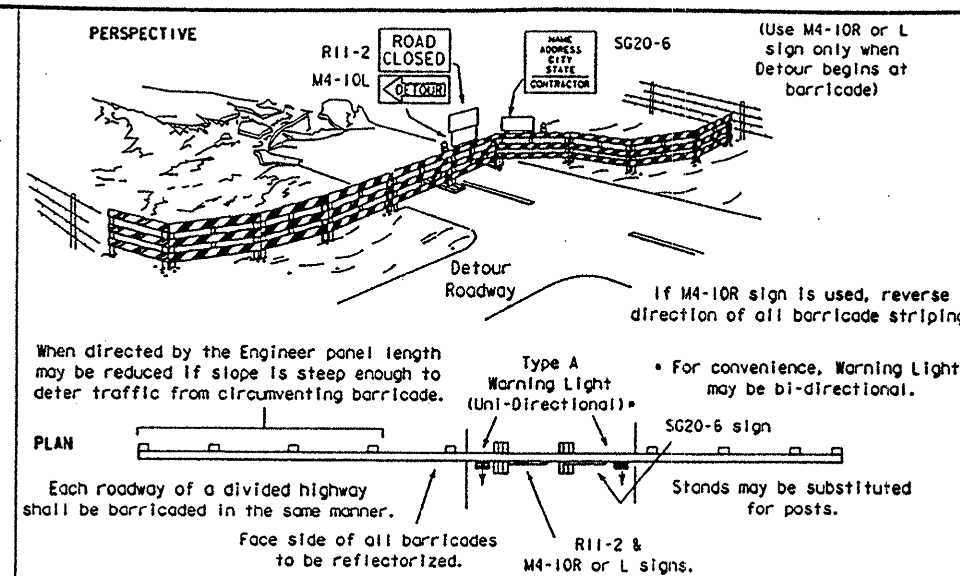

TYPE III(B) BARRICADE

1). The plan shown above is to be used when local traffic is not permitted inside the project. Contractor may locate his access gate anywhere in barricade except at center of roadway, where R11-2 and M4-10 signs should be mounted on fixed barricade section.

2). Advance signing, including construction warning signs, and detour signing shall be as specified elsewhere in the plans.

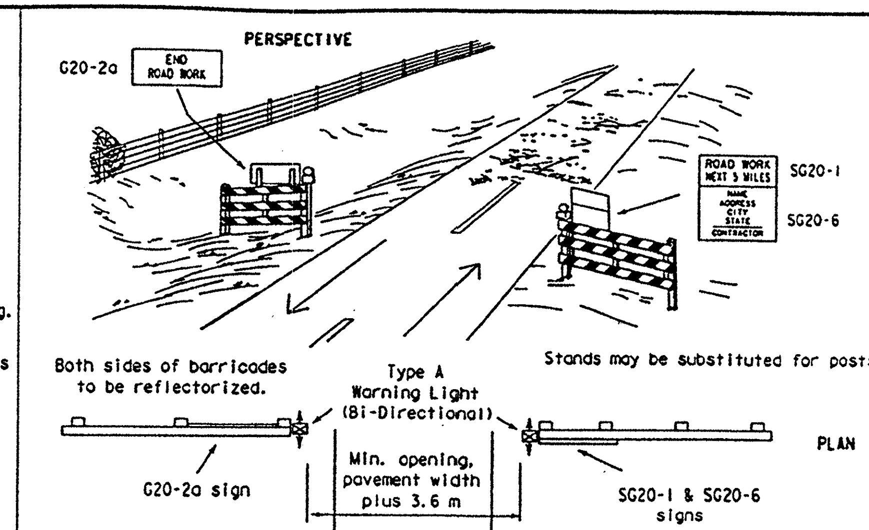

TYPE III(C) BARRICADE FOR TWO-WAY UNDIVIDED ROADWAY

TYPE III(D) BARRICADE

FOR CULVERT WIDENING OR OTHER ISOLATED WORK WITHIN THE PROJECT LIMITS

1). Where positive redirectional capability is provided, drums and barricades may be omitted.

2). Plastic construction fencing may be used with barrels for safety as required in the plans.

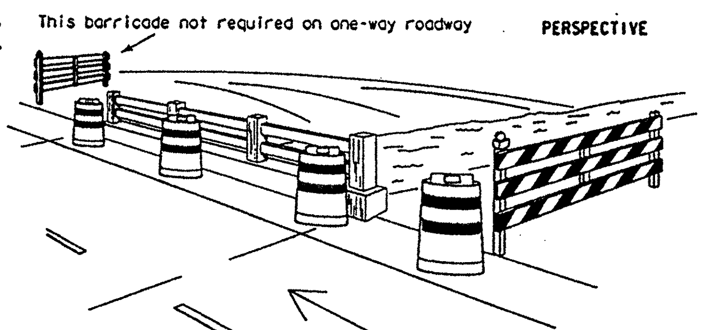

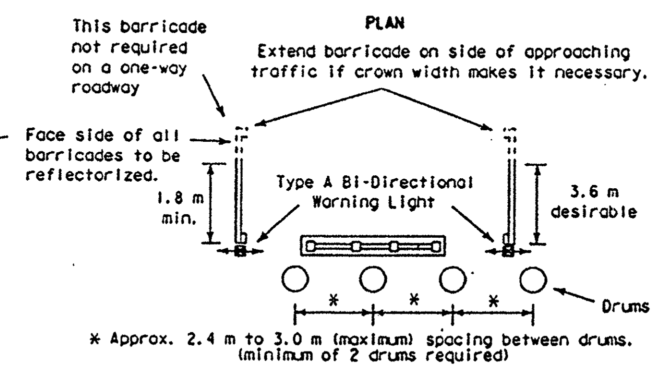

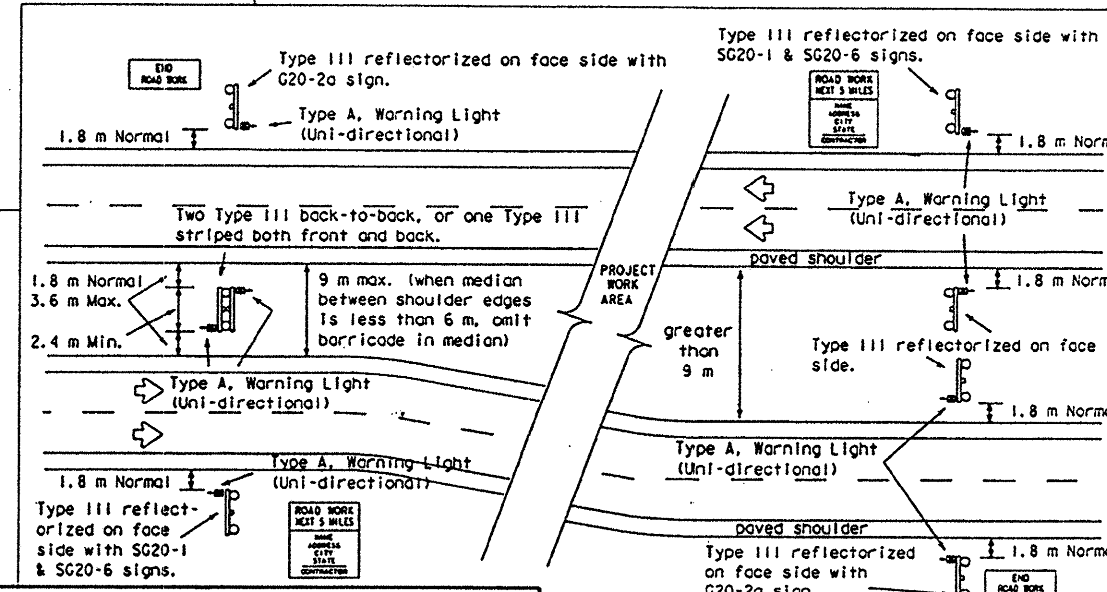

TYPE III(C) BARRICADE FOR DIVIDED HIGHWAYS

1). The plans shown above are to be used when all traffic is maintained through the project. The signs shown apply to the first and last barricades of a project. Other signs and barricades (Types I, II or III) may be required inside the project limits based upon the contractor's sequence of work and other conditions.
2). Where conditions will permit, minimum and usual length of barricade on each side of roadway should be 3.6 meters except as noted.
3). Barricade panel on each side of roadway should be approximately level.

GENERAL NOTES FOR TYPES I, II & III BARRICADES

Type I or II Barricades (see BC(3)(M)) are for temporary use to control traffic within the limits of a project whenever it is necessary to confine traffic to a specific area because of a particular construction operation. Type I Barricades should normally be used on conventional roads or urban streets and arterials. Type II Barricades have more reflective area, and are intended for use on expressways, freeways or other high speed roadways.

Type III(A) Barricades and accompanying signs are to be used at each end of construction projects closed to all but local traffic.

Type III(B) Barricades and accompanying signs are to be used at each end of construction projects closed to all traffic.

Type III(C) Barricades and accompanying signs are to be used at each end of construction project where traffic is maintained through the project. Type III(C) Barricades may also be used where traffic from other highways, county roads or city streets is permitted to enter the project area. Typical signing for Type III(C) Barricades is shown on Sheet BC(1)(M).

Type III(D) Barricades are to be used on culvert widening projects where traffic is routed over the structure. They shall be erected so as to provide the maximum roadway width for traffic and to allow sufficient space for construction operations behind the barricades.

For dimensions of barricade panels see Sheet BC(3)(M).

Warning Lights placed on Type III(A), (B) or (C) barricades should be mounted to the top, left side of the rail facing traffic. Barricades used at each end of the project shall be supplemented with warning lights as detailed on this sheet.

Warning Lights placed on Type III(A), (B), (C) or (D) barricades should be mounted at a minimum mounting height of 1.5 m and may be attached to the barricade.

Warning lights on barricades will be installed by the Contractor as determined in the plans, or as directed by the Engineer.

Warning lights will be maintained as directed by the Engineer.

All dimensions are in millimeters unless otherwise noted.

TYPICAL CONSTRUCTION WARNING SIGN SIZE AND SPACING 1,5,6

Roadway Classification	Posted Speed	Sign Spacing "X" ▲	Long-term Or Intermediate-term Stationary Approach Warning Signs CW20 Series And CW22-1 Sign		Short-term Stationary Or Short Duration Approach Warning Signs CW21 Series		Other Warning Signs
	MPH	Meters (Apprx.)	Standard mm	Minimum[4] mm	Standard mm [7]	Minimum[4] mm [7]	Standard mm [7]
Conven.	30	40	1200x1200	900x900	750x750 or 900x900	600x600 or 750x750	750x750 or 900x900
↓	35	50	↓	↓	↓	↓	↓
	40	75					
	45	100		Use Standard Size		Use Standard Size	
	50	120					
	55	150[2]					
	60	180[2]			1200x1200		1200x1200
	65	210[2]			↓		↓
	70	240[2]					
Exp or Frwy	*	* [3]	↓	↓	**	**	**

* For typical sign spacings on expressways and freeways, see TMUTCD typical application diagrams or TCP Standard Sheets.
▲ Minimum distance from work area to 1st Advance Warning sign and/or distance between each additional sign.
** Smaller sign sizes may be used where sign designs have not been included in the "Standard Highway Sign Design for Texas" manual.

General Notes:

1. Special or larger size signs may be used as may be necessary.
2. Distance between signs should be increased as required to have 460 meters advance warning.
3. Distance between signs should be increased as required to have 810 meters or more advance warning.
4. For use only on secondary roads or city streets where speeds are low.
5. Only diamond shaped warning sign sizes are indicated.
6. See sign size listing in TMUTCD, Appendix A for complete list of all available sign design sizes.
7. Where two sizes are listed, see sign size listing in TMUTCD, Appendix A for proper size.

STANDARD PLANS
TEXAS DEPARTMENT OF TRANSPORTATION
Traffic Operations Division

BARRICADE AND CONSTRUCTION STANDARDS

BARRICADES
SIGN SIZE AND SPACING

BC(2)-97(M)

ORIG DRAW DATE: APRIL 1988	DN:	CK:	DW: DN	CK: CW
REVISIONS 6-88 7-89 4-92 2-94 1-97	STATE DISTRICT 15	FEDERAL REGION 6	FEDERAL AID PROJECT CD2452-1-35	SHEET 269
	COUNTY BEXAR	CONTROL 2452	SECTION 01	JOB 035 HIGHWAY LP1604

LEVELS DISPLAYED | DATE: | ACC: | FILE: | DN: | CK: | DW: | CK:

DISCLAIMER
The use of this standard is governed by the "Texas Engineering Practice Act". No warranty of any kind is made by TxDOT for any purpose whatsoever. TxDOT assumes no responsibility for the conversion of this standard to other formats or for incorrect results or damages resulting from its use.

STRIPING

TYPICAL DETAIL FOR BARRICADE RAIL

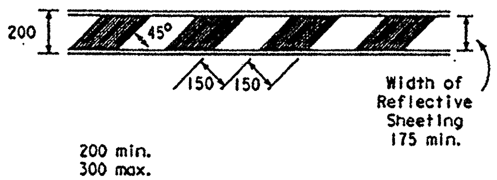

TYPICAL DETAIL FOR VERTICAL PANEL

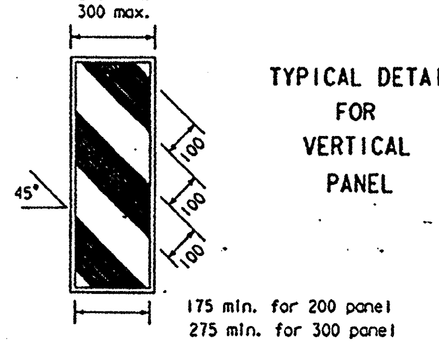

BARRICADES

TYPE III

The three (3) rails on Type III barricades shall be reflective orange and reflective white stripes on one side facing one-way traffic and both sides for two-way traffic.

PANEL

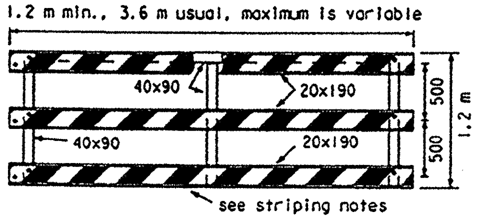

STAND

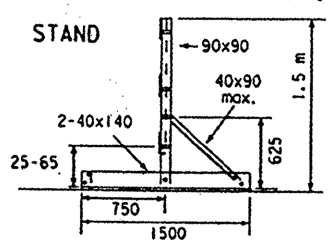

Typical fasteners are ⅜", ½" or ⅝" bolt with washers or lag screws.

POST

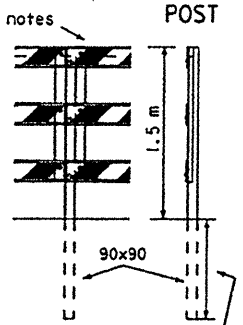

GATE

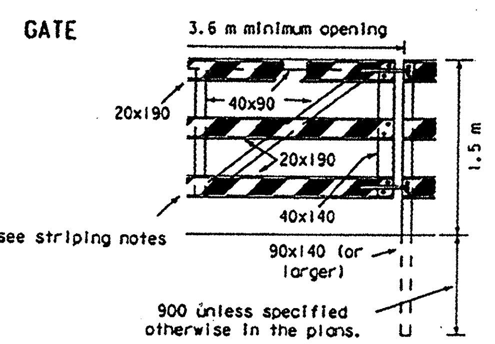

CONES

Cones shall have a minimum weight of 4.3 kg.

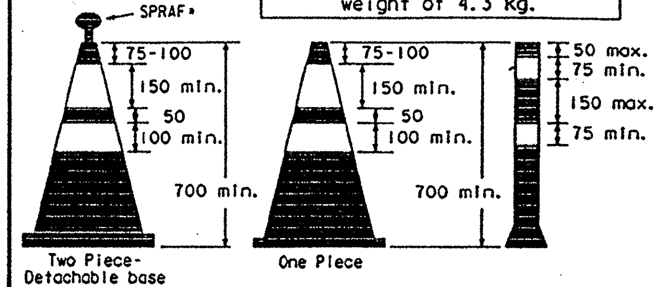

Traffic cones and tubular markers shall be a minimum 700 mm in height. Orange shall be the predominant color on cones and tubular markers. They should be kept clean and bright for maximum visibility.

For nighttime use they shall be reflectorized or equipped with lighting devices for maximum visibility. Reflectorized material shall have a smooth, sealed outer surface which will display the same approximate color day and night.

Reflectorization of tubular markers shall be a minimum of two 75 mm bands placed a maximum of 50 mm from the top with a maximum of 150 mm between bands. Reflectorization of cones shall be provided by a minimum 150 mm band placed a maximum of 75 mm from the top, supplemented by a 100 mm band spaced a minimum of 50 mm below the 150 mm band.

Cones or tubular markers are generally suitable for temporary usage (up to 8 hours) with other channelization devices such as vertical panels or drums for long term usage. Care should be taken to insure that they remain in their proper location and in an upright position.

The weight of a two piece cone and detachable base may be combined to meet the 4.3 kg minimum weight. Detachable base shall be fabricated from non-rigid materials such as rubber or plastic.

*-SPRAF (stacking/placement/removal assistance feature) may be designed as a handle, hook or other shape, fabricated from non-rigid materials similar to the cone material, and may extend up to a maximum of 200 mm above the top of cone. The length of SPRAF shall not be considered with regard to the 700 mm minimum height.

TYPE I

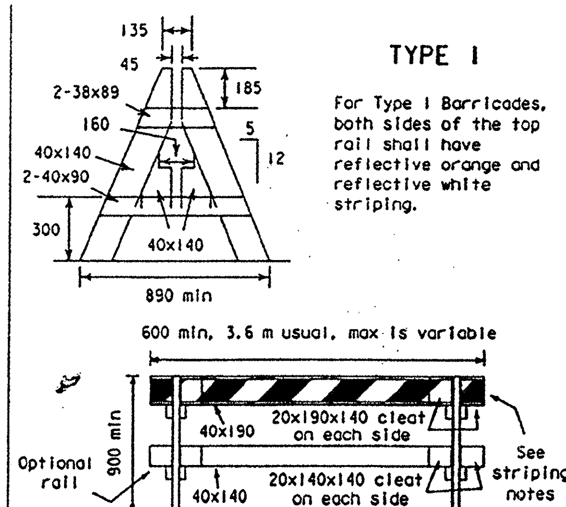

For Type I Barricades, both sides of the top rail shall have reflective orange and reflective white striping.

TYPE II

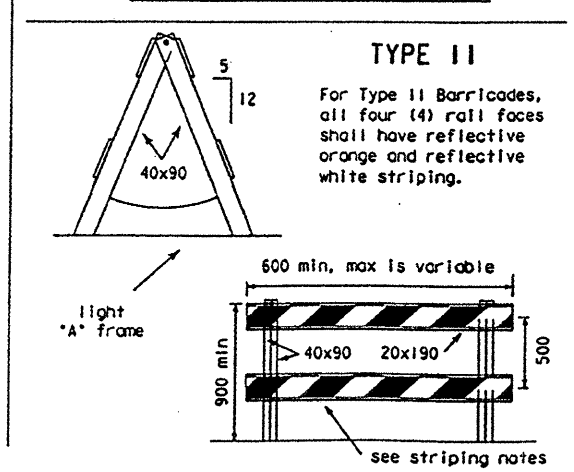

For Type II Barricades, all four (4) rail faces shall have reflective orange and reflective white striping.

VERTICAL PANELS (VP)

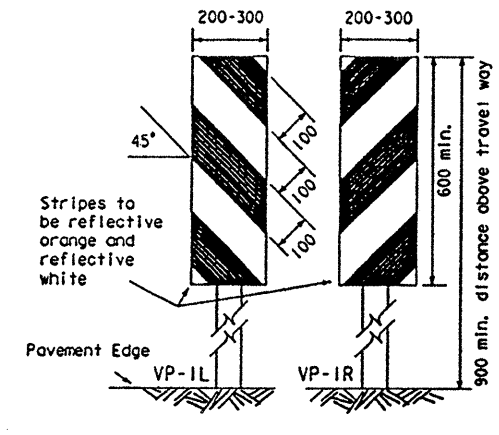

Base and support may be made of various materials such as plastic, fiberglass, recycled rubber and/or wood.

Vertical Panels are normally used as channelizing devices to indicate tangent or nearly tangent roadway alignment where good target value of a device is needed in daytime as well as the nighttime. In addition, vertical panels should be used at the edge of shoulder drop-offs and other areas such as lane transitions where positive daytime and nighttime delineation may be required. Vertical panels should be mounted back to back if used at the edge of cuts adjacent to two-way two lane roadways. Stripes should always slope downward toward the traveled way. Material used to weight devices shall be sand. Nails may be used in the final construction of VP support. Vertical Panels used on expressways, freeways, and other high speed roadways shall have a minimum of .18 square meters of retroreflective area facing traffic.

BARRICADE NOTES

Barricades extending across a roadway, should have stripes slope downward in the direction toward which traffic must turn in detouring. When both right and left turns are provided for, the chevron striping may slope downward in both directions from the center of the barricade.

Striping of rails, panels and gates for the right side of the roadway, is illustrated. For the left side of the roadway, striping should slope downward to the right.

Identification markings may be shown only on back side of barricade rails. Maximum height of letters shall be 25 mm.

Barricades shall not be placed parallel to traffic unless an adequate clear zone is provided (see BC(1)(M)).

Barricades may be designed and constructed from wood, or any other suitable material in a manner approved by the Engineer.

When signs are placed on barricades, a maximum number of 2 signs per barricade section will be permitted.

Barricades are to be constructed in a first-class workmanship manner of clean sound material. All surfaces above ground, which are not striped, shall be white except the unpainted galvanized metal or aluminum components. Components made of lumber shall be painted with a minimum of two coats of an approved brand of white paint to insure thorough coverage and a uniform white color.

Barricades inside the project shall be removed upon completion of the work and/or the elimination of the hazard on any section.

When Wood Barricades are used and when orange and white stripes are required on the backside, a 40 x 190 rail may be used in lieu of the 20 x 190 rail and 40 x 90 stiffener. Otherwise the rail should be fabricated as detailed.

BARRICADE DETAILS

All lumber sizes are nominal dimensions. Fabrication details are plus or minus 10 mm.

Nails may be used in the construction of the barricade; however, all connections will have an approved fastener.

PLASTIC DRUMS

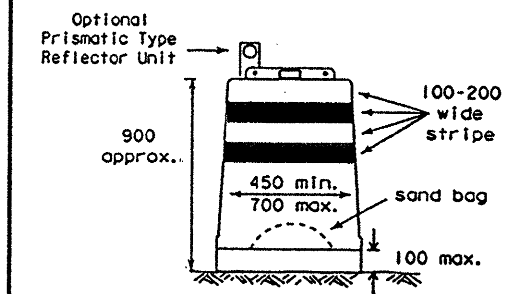

Metal drums used as a channelizing device or sign support shall not be allowed.

Drums used for traffic warning or channelization shall be constructed of lightweight, flexible and deformable materials and be a minimum of 900 mm in height; and have at least an 450 mm minimum width, regardless of orientation. The markings on drums shall be horizontal, circumferential, alternating orange retroreflective and white retroreflective stripes 100 to 200 mm wide. The first stripe should start within 100 mm of top of the drum. Each drum shall have a minimum of two orange and two white stripes. Any non-retroreflective space between stripes shall not exceed 50 mm in width. Color of drums before retroreflective materials are added shall be orange.

Drums shall have closed tops that will not allow collection of water, trash or other debris. Tops may have a hand grip.

Delineators may be placed on drums used in series for traffic channelization as specified in the plans or as directed by the Engineer. Color of delineators shall conform to the TMUTCD requirements.

When warning lights are attached to drums, they shall be attached as per the manufacturer's recommendations.

Signs or chevrons attached to the top of drums shall be a maximum size of 450 mm by 600 mm, and shall be fabricated from 2.0 mm thick aluminum, 5 mm fiberglass reinforced plastic, or lightweight plastic.

Drums should be ballasted or weighted with a minimum of 13.6 kg and a maximum of 34 kg of sand placed in one or two sand bags or a sand filled or crumb rubber base. Other ballasting devices may be used as approved by the Engineer. Drums should not be weighted with heavy objects or water. Ballast for drums should not be any material that would make them hazardous to motorists, pedestrians, or workers. When they are used in regions susceptible to freezing, they should have drainage holes in the bottom so water will not accumulate and freeze, causing a hazard if struck by a motorist. Ballast shall not be placed on top of the drum.

Adhesives may be used to secure base of drums to pavement.

BARRICADE CHARACTERISTICS

TYPE*	I	II
Width of Rail	200 min-300 max	200 min-300 max
Length of Rail	600 mm min	600 mm min
Width of Stripes**	150 mm	150 mm
Height	900 mm min	900 mm min
Number of Reflectorized Rail Faces	2 (one each direction)	4 (two each direction)

TYPE*	III
Width of Rail	200 min-300 max
Length of Rail	1200 mm min
Width of Stripes	150 mm
Height	1500 mm min
Number of Reflectorized Rail Faces	3 if facing traffic in one direction; 6 if facing traffic in two directions

* For wooden barricades nominal lumber dimension will be satisfactory

** For rails less than 900 mm long, 100 mm wide stripes stripes shall be used

RETROREFLECTIVE SHEETING

Type A = Engineer Grade
Type B = Super Engineer Grade
Type C = High Specific Intensity

as defined in Material Specification D-9-8300

GENERAL NOTES

REFLECTORIZATION

The reflectorized white and reflectorized orange stripes for channelizing devices such as barricades, drums and vertical panels shall be constructed of retroreflective sheeting meeting the color and reflectivity requirements of Material Specification, D-9-8300, Type C, unless otherwise specified in the plans. Channelizing devices used only during daylight hours, may use any type sheeting meeting the color and reflectivity requirements of Material Specification, D-9-8300.

All dimensions are in millimeters unless otherwise noted.

STANDARD PLANS
TEXAS DEPARTMENT OF TRANSPORTATION
Traffic Operations Division

BARRICADE AND CONSTRUCTION STANDARDS

CHANNELIZING DEVICES — BC(3)-97(M)

ORIG DRAW DATE: APRIL 1988	DN:	CK:	DW: DN	CK: CW	HEC NO.:

REVISIONS	STATE DISTRICT	FEDERAL REGION	FEDERAL AID PROJECT	SHEET
6-88 1-97; 7-89; 4-92; 2-94	15	6	CD 2452-1-35	2570
	COUNTY: BEXAR		CONTROL 2452, SECTION 01, JOB 035	HIGHWAY: [illegible]

DN:	CK:	DW:	CK:	DATE:	ACC:	FILE:

DISCLAIMER
The use of this standard is governed by the "Texas Engineering Practice Act". No warranty of any kind is made by TxDOT for any purpose whatsoever. TxDOT assumes no responsibility for the conversion of this standard to other formats or for incorrect results or damages resulting from its use.

WORK ZONE SIGNS

GENERAL

Standard signs shall be used as required by the BC Standard sheets, the plans, or as directed by the Engineer to regulate, warn, and guide traffic. All sign usage and erection shall be in strict accordance with the "Texas Manual on Uniform Traffic Control Devices for Streets and Highways" (TMUTCD). The Contractor shall maintain each sign as directed by the Engineer.

The Contractor may use either the sign designs shown on the BC Standard Sheets, or those sign designs shown in the "Standard Highway Sign Designs for Texas " (SHSD). All work zone signs provided for in the TMUTCD but not detailed in the plans may be used when directed by the Engineer.

SIZE OF SIGNS

On secondary roads or city streets where speeds are low, smaller size construction warning signs may be used with the written approval of the Engineer and if the sign size is in accordance with the "Typical Construction Warning Sign Size and Spacing Chart" shown on page 6C-11 of the TMUTCD, Part VI.

MATERIALS

Contruction signs shall be made from wood, metal, fiberglass, plastic, vinyl or other approved materials. The designation of metal, fiberglass, plastic, vinyl and wood as primary materials for signs shall not be interpreted to exclude other suitable rigid materials. Mesh materials will not be allowed. Non-rigid materials shall not be allowed for nighttime usage unless approved by the Engineer.

SIGN BLANK THICKNESS

Wood for signs shall be minimum 13 mm, medium density, outdoor grade plywood. Aluminum sign blanks shall have a minimum thickness of 2.0 mm, for sign areas up to 1.5 sq. meters. Sign areas greater than 1.5 square meters should use a minimum thickness of 2.5 mm.

SPLICES

All wood signs fabricated from 2 or more pieces shall have one or more plywood cleats, 13 mm thick by 150 mm wide, fastened to the back of the sign and extending fully across the sign.

Wood Sign posts shall not be spliced.

REFLECTIVE SHEETING

Reflectorized signs shall be constructed of retroreflective sheeting meeting the color and reflectivity requirements of Material Specification, D-9-8300 or D-9-8310. Day only is defined as a device that is used only during daylight hours.

Type A, B or C sheeting may be used for all, day only, applications. Type A sheeting should be used for all, white background, regulatory signs. Type C sheeting shall be used for all other applications.

The above applications of sheeting grades to different type signs will apply unless otherwise specified in the plans.

TYPE A = Engineer Grade
TYPE B = Super Engineer Grade
TYPE C = High Specific Intensity

SIGN LETTERS

All sign lettering shall be clear, open rounded type capital letters as approved by and as published by the Federal Highway Administration (FHWA). Signs and lettering shall be of first class workmanship equivalent to that of the Department standard signs.

SUPPLEMENTAL PLAQUES

Supplemental plaques erected in conjunction with regulatory, warning, construction warning or guide signs shall be the same color as the parent sign unless specified elsewhere in the plans. Supplemental plaques for nighttime use shall be the same Type reflective sheeting (A, B, or C) as parent sign.

SUPPORTS AND MOUNTING HEIGHT

Regardless of the type of support used, or duration of work, regulatory signs should not be erected at heights less than 2.1 m above the pavement surface.

Wood sign post supports shall be painted white.

Signs may be erected on portable or fixed supports for use on construction projects to warn or guide traffic through and/or around the actual construction area.

PORTABLE - Signs erected on portable supports for use on construction projects normally mean signs which are used during the daytime to warn or guide traffic through and/or around the actual construction area, but at the end of the workday such signs are removed.

Portable supports shall be as shown on this sheet. Signs with portable supports may be used for short term, short duration and mobile operations. The bottom of the sign shall be a minimum of one 300 mm above the pavement surface.

FIXED - Signs erected on fixed supports for use on construction projects normally mean signs that are to remain in place for both daytime and nighttime usage to requiate, warn and guide traffic in advance of and within the limits of the project including the crossroad approaches. Signs erected on fixed supports should be at a minimum height of 2.1 meters.

SIGN SUPPORT WEIGHTS

Where sign supports require the use of weights to keep from turning over, the use of some type of sandbag is recommended. The use of pieces of rock, concrete, iron, steel or other solid objects will not be permitted. Sandbags shall only be placed along or upon the base supports of the device and shall not be suspended above ground level or hung with rope, wire, chains or other fasteners.

REMOVING OR COVERING

When sign messages may be confusing or no longer apply, the signs and supports shall be removed from roadway and shoulder, or the signs shall be completely covered. Turning signs from motorists view will not be allowed. When signs are covered the material used shall be opaque, such as heavy mil black plastic. Burlap shall not be used to cover signs. Signs shall be removed upon completion of the work.

Duct tape or other adhesive material shall not be affixed to sign face.

TYPICAL SIGN SUPPORTS

FIXED SUPPORTS

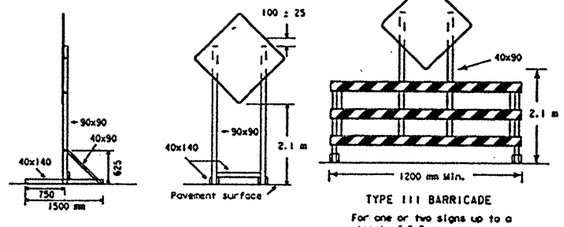

SKID MOUNT SIGN SUPPORT
For sign up to 2 square meters, barricade rails optional

TYPE III BARRICADE
For one or two signs up to a total of 3.7 square meters.

See BC(3) for barricade construction details for stand or post type barricade sign support and typical fasteners that may be used to attach sign support.

ATTACHMENT DETAILS

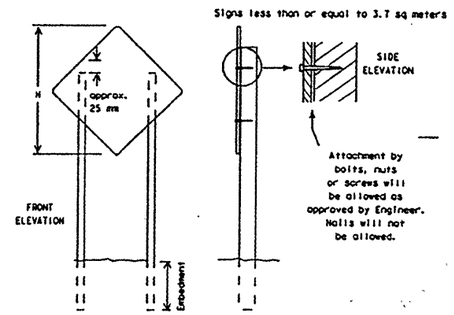

Nominal Size	No. of Posts	Sq. m of Sign Face	Minimum Soil Embedment	Drilled Hole(s) Required	Hole Dia. (A) and Vertical Spacings (B & C)
90 x 90	1	1.1	900 mm	no	n/a
90 x 90	2	2.0	900 mm	no	n/a
90 x 140	1	2.0	900 mm	YES	35 mm @ 100 & 450

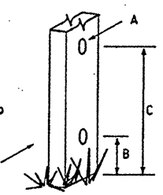

PORTABLE SUPPORTS

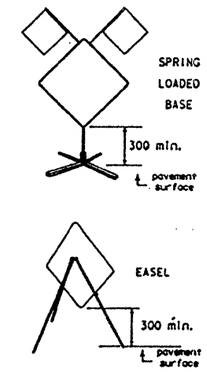

Sand bags may be used only if bag is resting on the ground. Other weights are not to be used. Other forms of attachment of weights to easel or sign shall not be used unless approved by the Engineer in writing.

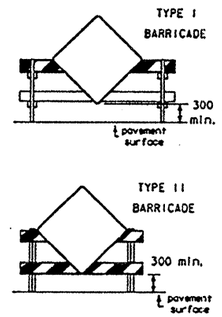

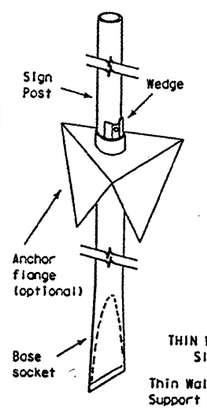

FIXED SIGN SUPPORT

THIN WALL TUBE TYPE SIGN SUPPORT

Thin Wall Tube Type Sign Support as manufactured by Southwestern Pipe, Inc., Houston, Tx.

NOTES:
Installation requirements will be as recommended by manufactorer.

USAGE OF CWI-6, ECWI-6a AND CWI-8 SIGNS

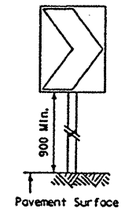

CWI-8

The CHEVRON sign (CWI-8) may be used to replace roadside delineation on curves or used in transitions or tapers.

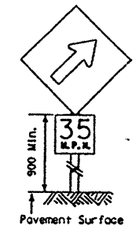

ECWI-6a

An UPWARD SLOPING ARROW sign (ECWI-6a) is intended to be used to indicate the beginning of a curve or transition. It should be preceded with an appropriate curve sign when needed, and should not be used throughout the curve or transition. Advisory speed plaque is optional.

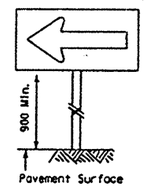

CWI-6

A LARGE ARROW sign (CWI-6) is intended to be used to give notice of a sharp change in alignment (turn) in the direction of travel. It should be preceded with an appropriate advance construction warning turn sign.

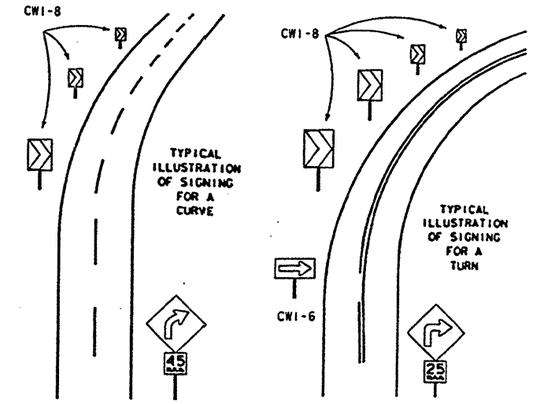

NOTES:

1. CWI-6, ECWI-6a & CWI-8 Signs may be mounted on temporary supports.
2. CHEVRON alignment signs, when used, are erected on the outside of a curve, sharp turn or on the far side of an intersection, in line with and at right angles to approaching traffic. Spacing of the signs should be such that three are visible throughout the change in horizontal alignment.
3. For two-way traffic, use same arrangement of signs on outside of curve for each direction of travel.
4. Appropriate advance warning CURVE or TURN sign with Advisory Speed plaque should be used when needed.

TYPICAL FLASHING ARROW PANEL

For traffic to move right.

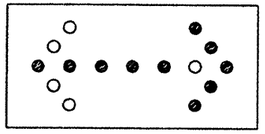

REQUIREMENTS

TYPE	MINIMUM SIZE	MINIMUM NUMBER OF PANEL LAMPS	MINIMUM VISIBILITY DISTANCE
B	750 x 1500	13	1.2 km
C	1200 x 2400	15	1.6 km

ATTENTION: All arrow panels shall be equipped with automatic dimming devices.

1. The Advance Warning Flashing Arrow Panel should be used for all lane closures (multilane roadway), or slow moving maintenance or construction activities on the traveled way. Arrow panels should not be used on two-lane roadways, detours, diversions or work on shoulders unless the CAUTION mode is used.
2. Necessary signs, barricades or other traffic control devices should be used in conjunction with the Advance Warning Arrow Panel.
3. The Arrow panel should have the capability of the following mode selections: LEFT ARROW, RIGHT ARROW, LEFT and RIGHT ARROW and CAUTION. The CAUTION mode consists of four corner lamps flashing simultaneously.
4. The Arrow panel shall be capable of minimum 50 percent dimming from rated lamp voltage. The flashing rate of the lamps shall not be less than 25 times per minute nor more than 40 flashes per minute. The Advance Warning Flashing Arrow Panel shall be mounted on a vehicle, trailer or other suitable support.
5. Minimum lamp "on time" shall be approximately 50 percent for the flashing arrow and 25 percent for the sequential chevron.
6. The TxDOT standard is the flashing arrow, however the sequential chevron may be used. The sequential arrow should NOT be used.

All dimensions are in millimeters unless otherwise noted.

STANDARD PLANS
TEXAS DEPARTMENT OF TRANSPORTATION
Traffic Operations Division

BARRICADE AND CONSTRUCTION STANDARDS

SIGN FABRICATION DETAILS
TYPICAL SIGN SUPPORTS
FLASHING ARROW PANELS

BC(4)-97(M)

ORIG. STANDARD DATE: APRIL 1988	DN:	CK:	DW: DN	CK: CW	MSG NO.:
REVISIONS: 6-88 1-97, 7-89, 4-92, 2-94	STATE DISTRICT: 15	FEDERAL REGION: 6	FEDERAL AID PROJECT: CD2452-1235		SHEET: 271
	COUNTY: BEXAR		CONTROL / SECTION / JOB: 2452 01 035		HIGHWAY: LP1604

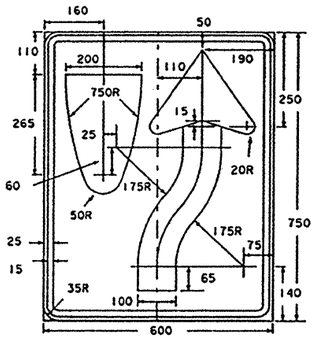

R4-7
600x750

Symbol - Black
Border - Black
Background - White Refl.

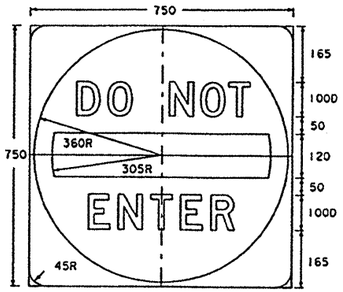

R5-1
750x750

Letters - White Refl.
Bar - White Refl.
Border - White Refl.
Background - Red Refl.

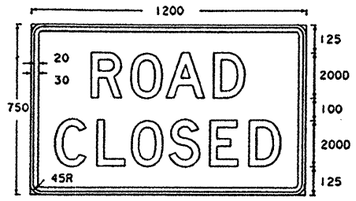

R11-2
1200x750

Letters - Black
Border - Black
Background - White Refl.

Alternate 1st line legend

STREET I 200D R11-2S
RAMP I 200D R11-2R
BRIDGE I 200D R11-2B

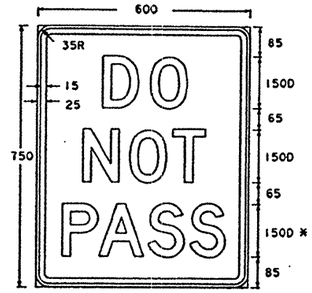

* reduce spacing 40%

R4-1
600x750

Letters - Black
Border - Black
Background - White Refl.

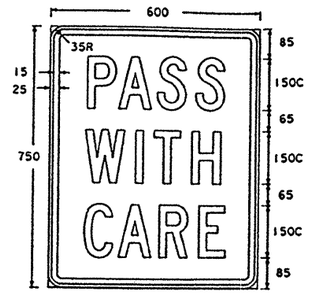

R4-2
600x750

Letters - Black
Border - Black
Background - White Refl.

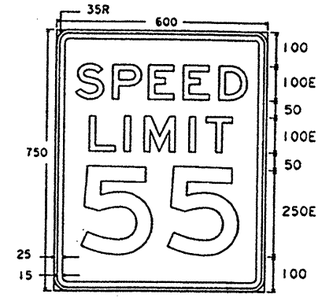

R2-1
600x750

Letters - Black
Border - Black
Background - White Refl.

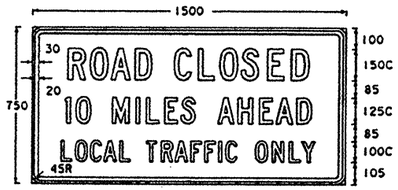

R11-3a
1500x750

Letters - Black
Numerals - Black
Border - Black
Background - White Refl.

Alternate 1st line legend

BRIDGE OUT I 150C R11-3b

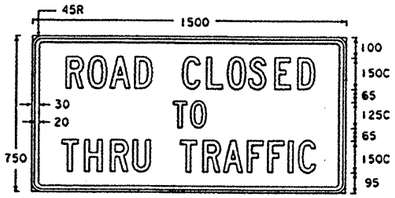

R11-4
1500x750

Letters - Black
Border - Black
Background - White Refl.

R20-3
1200x1050

Letters - Black
Border - Black
Background - White Refl.

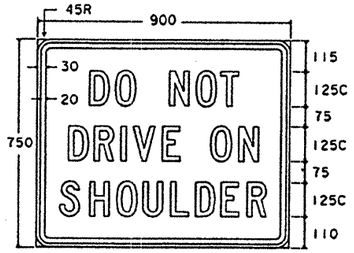

R4-3A
900x750

Letters - Black
Border - Black
Background - White Refl.

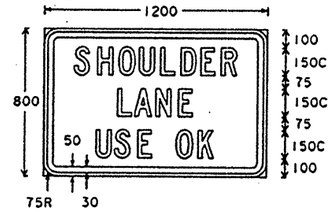

R4-3d
1200x800

Letters - Black
Border - Black
Background - White Refl.

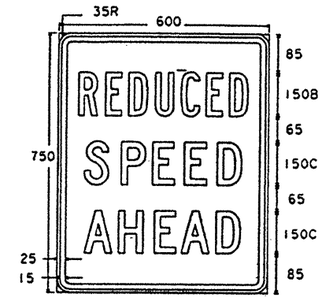

R2-5a
600x750

Letters - Black
Border - Black
Background - White Refl.

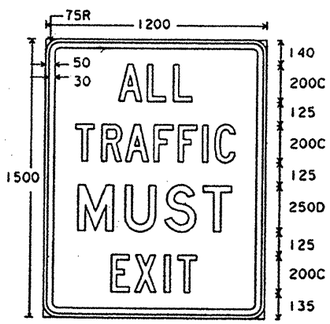

R3-22
1200x1500

Letters - Black
Border - Black
Background - White Refl.

R5-7
600x300

Letters - Black
Border - Black
Background - White Refl.

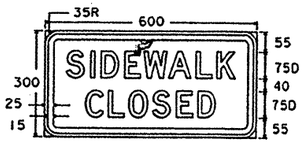

R5-8
600x300

Letters - Black
Border - Black
Background - White Refl.

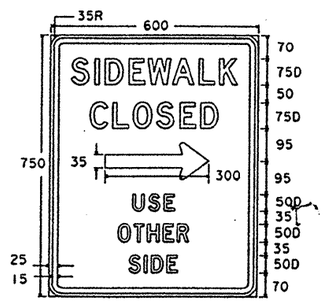

R5-8T
600x750

Letters - Black
Symbol - Black
Border - Black
Background - White Refl.

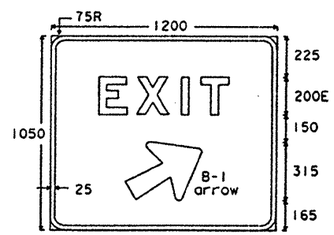

E5-1a
1200x1050

Letters - White Refl.
Numerals - White Refl.
Symbol - White Refl.
Background - Green Refl.

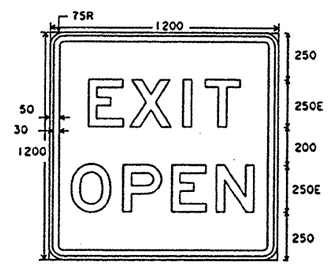

E5-2
1200x1200

Letters - Black
Border - Black
Background - Orange Refl.

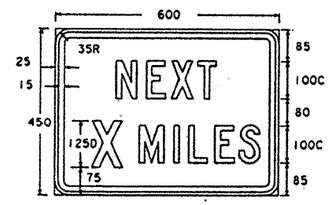

R20-1
600x450

Letters - Black
Border - Black
Background - White Refl.

All dimensions are in millimeters unless otherwise noted.

Signs E5-1a, E5-2 and R5-1 - letters, border and symbol may be fabricated from FLAT REFLECTIVE SHEETING, TYPE C.

R5-9a
600x375

Letters - Black
Symbol - Black
Border - Black
Background - White Refl.

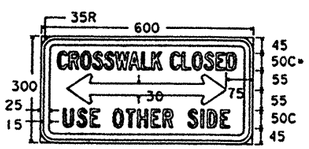

* reduce spacing 40%

R5-9
600x300

Letters - Black
Symbol - Black
Border - Black
Background - White Refl.

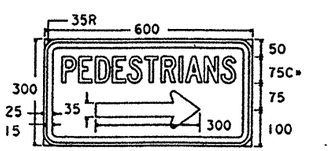

* reduce spacing 40%

R5-7T
600x300

Letters - Black
Symbol - Black
Border - Black
Background - White Refl.

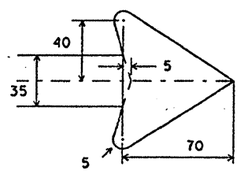

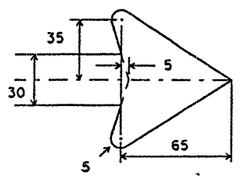

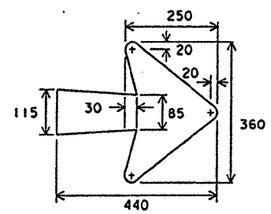

B-1 Arrow Detail

STANDARD PLANS
TEXAS DEPARTMENT OF TRANSPORTATION
Traffic Operations Division

BARRICADE AND CONSTRUCTION STANDARDS

REGULATORY AND GUIDE SIGNS BC(5)-97(M)

ORIG. GRAD DATE: 1996	DN: MT	CK:	DW: ON	CK:	REG. NO.:
REVISIONS 1-97	STATE DISTRICT 15	FEDERAL REGION 6	FEDERAL AID PROJECT: CBA 82-1-35		SHEET 272
	COUNTY REVOR		CONTROL / SECTION / JOB		HIGHWAY

DISCLAIMER
The use of this standard is governed by the "Texas Engineering Practice Act". No warranty of any kind is made by TxDOT for any purpose whatsoever. TxDOT assumes no responsibility for the conversion of this standard to other formats or for incorrect results or damages resulting from its use.

LEVELS DISP: 1 2 3 4 5 6 7 8 9 F
DATE: 21 31 41 51 61
ACC: 82 93 03 13 23
FILE: 33 43 53 63 73 83 93 04 14 24 34 44 54 64 74 84
95 05 15 25 35 45 55 65 75 85 95 06 16 26 36
DN: CK: DW: CK:

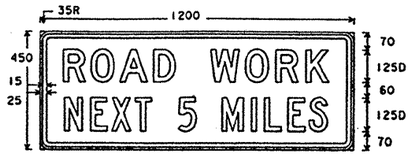

SG20-1
1200x450

Letters - Black
Numbers - Black
Border - Black
Background - Orange Refl.

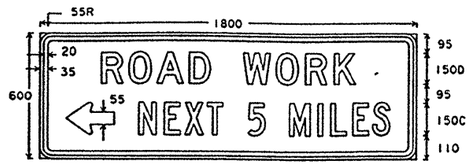

G20-1bL
1800x600

Letters - Black
Numbers - Black
Border - Black
Background - Orange Refl.

NOTE:
G20-1 Series signs shall show distances rounded to nearest whole mile. Fractions and decimal miles will not be used.

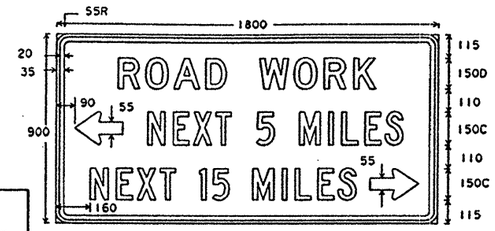

G20-1a
1800x900

Letters - Black
Numbers - Black
Border - Black
Background - Orange Refl.

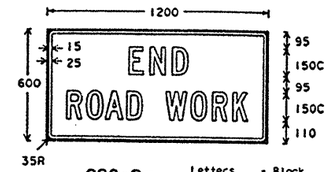

G20-2a
1200x600

Letters - Black
Border - Black
Background - Orange Refl.

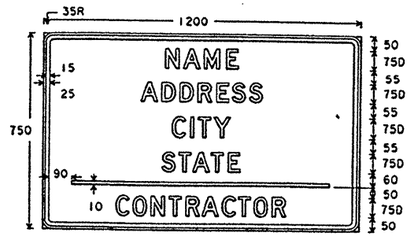

SG20-6
1200x750

Letters - Black
Border - Black
Background - Orange Refl. or White Refl. (optional)

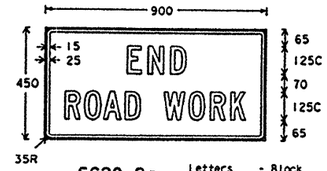

SG20-2a
900x450

Letters - Black
Border - Black
Background - Orange Refl.

CW22-2a
1500x900

Letters - Black
Number - Black
Border - Black
Background - Orange Refl.

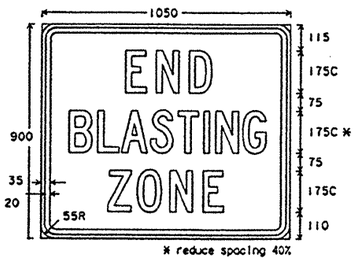

* reduce spacing 40%

CW22-3
1050x900

Letters - Black
Border - Black
Background - Orange Refl.

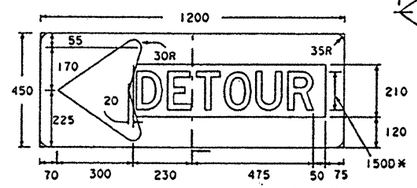

* reduce spacing 40%

M4-10R
M4-10L
48" X 18"

Letters - Black
Arrow - Orange Refl.
Background - Black

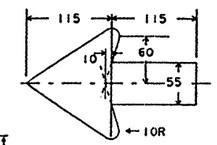

* reduce spacing 40%

G20-4
900x450

Letters - Black
Border - Black
Background - Orange (Refl. Optional)

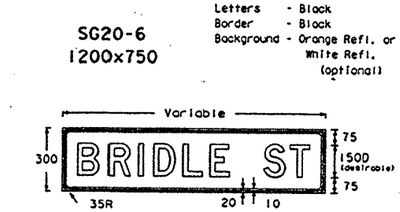

M4-9N
Variable X 300

Letters - Black
Border - Black
Background - Orange Refl.

The M4-9R,L or S sign is to be used to detour local streets or roads that are not a State or Federal numbered highway; however, it should not be used in lieu of the M4-10 sign at the beginning of the detour or to detour State or Federal numbered routes.

Also, when the M4-9R,L or S sign is used, a sign (M4-9N) with the name of the street being detoured may be mounted above it.

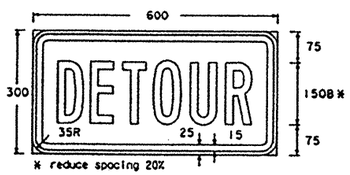

* reduce spacing 20%

M4-8
600x300

Letters - Black
Border - Black
Background - Orange Refl.

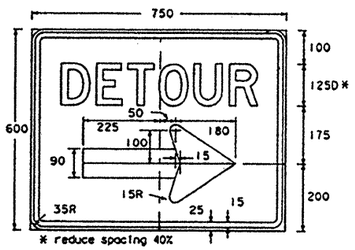

* reduce spacing 40%

M4-9R
M4-9L
750x600

Letters - Black
Symbol - Black
Border - Black
Background - Orange Refl.

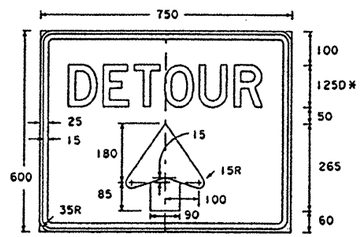

* reduce spacing 40%

M4-9S
750x600

Letters - Black
Symbol - Black
Border - Black
Background - Orange Refl.

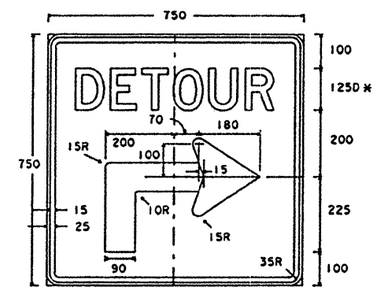

* reduce spacing 40%

M4-9AR
M4-9AL
750x750

Letters - Black
Symbol - Black
Border - Black
Background - Orange Refl.

* Alternate first line legend

RESTAURANT D70R 100C
BUSINESS D70B 100C
MOTEL D70M 100C
GAS D70G 100C

D70S
1050x350

Letters - White Refl.
Symbol - White Refl.
Border - White Refl.
Background - Blue Refl.

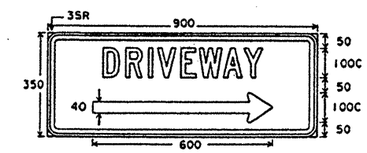

D-70
900x350

Letters - White Refl.
Symbol - White Refl.
Border - White Refl.
Background - Blue Refl.

All dimensions are in millimeters unless otherwise noted.

NOTE:
STOP, YIELD, and SIGNAL AHEAD symbol signs should be yellow background. Orange background signs will be considered acceptable until BC-98 becomes effective.

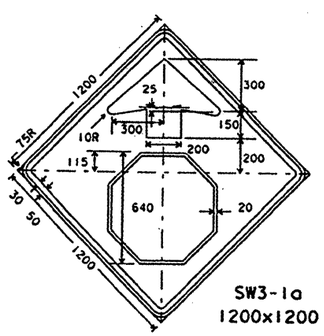

SW3-1a
1200x1200

Border and Arrow - Black
Symbol - White Border on Red Background (Refl)
Background - Yellow Reflective

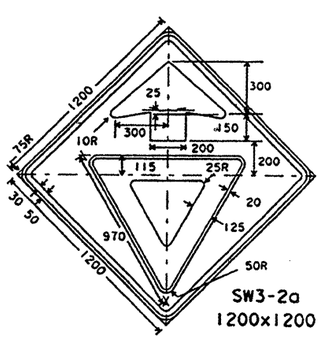

SW3-2a
1200x1200

Border and Arrow - Black
Symbol - Red Border Band on White Background (Refl)
Background - Yellow Reflective

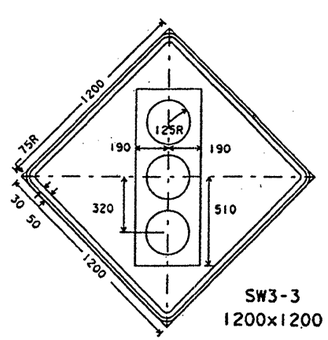

SW3-3
1200x1200

Symbol and Border - Black
Top Circle - Red Reflective
Bottom Circle - Green Reflective
Background - Yellow Reflective

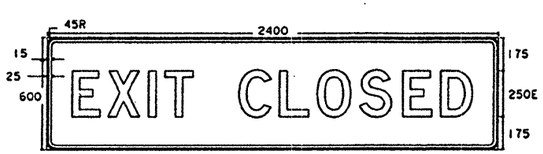

CW26-1T
2400x600

Letters - Black
Border - Black
Background - Orange Refl.

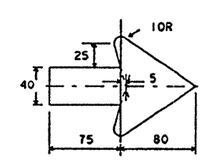

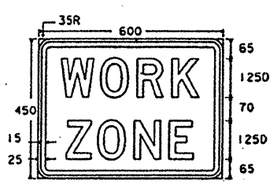

G20-9
600x450

Letters - Black
Border - Black
Background - Orange Refl.

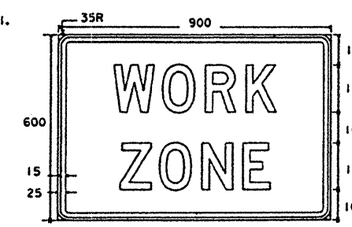

EG20-9
900x600

Letters - Black
Border - Black
Background - Orange Refl.

STANDARD PLANS
TEXAS DEPARTMENT OF TRANSPORTATION
Traffic Operations Division

BARRICADE AND CONSTRUCTION STANDARDS

CONTRACTOR INFORMATION, DETOURS & WARNING SIGNS

BC(6)-97(M)

ORIG. BRIDGE DATE: 1996	DN: MT	CK:	DW: DN	CK: MT	MSG. NO.:
REVISIONS 1-97	STATE DISTRICT 15	FEDERAL REGION 6	FEDERAL AID PROJECT NH 2452-1-35		SHEET 223
	COUNTY REVOR		CONTROL 2452	SECTION 01	JOB	HIGHWAY NH 277

DISCLAIMER
The use of this standard is governed by the "Texas Engineering Practice Act". No warranty of any kind is made by TxDOT for any purpose whatsoever. TxDOT assumes no responsibility for the conversion of this standard to other formats or for incorrect results or damages resulting from its use.

LEVELS DISP	DATE:	DN:
	ACC:	CK:
	FILE:	DW:
		CK:

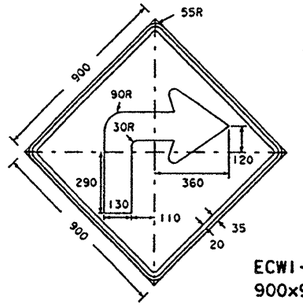

ECW1-1R
900x900

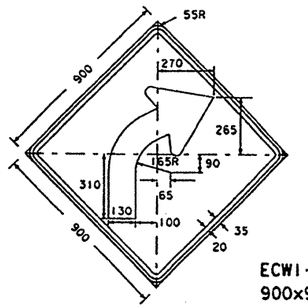

ECW1-2R
900x900

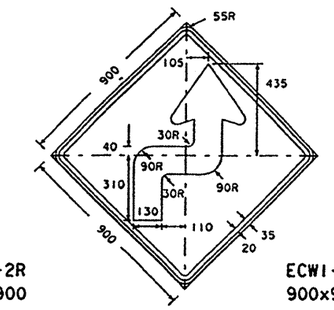

ECW1-3R
900x900

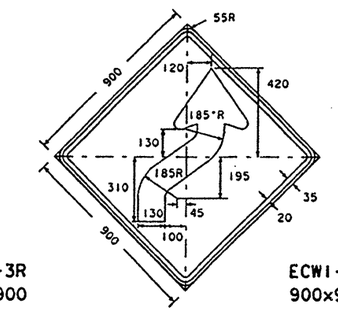

ECW1-4R
900x900

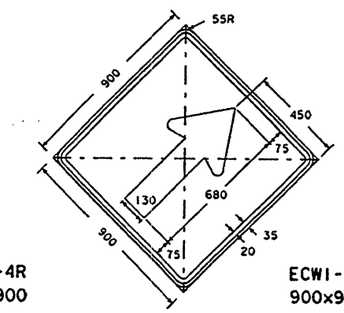

ECW1-6a
900x900

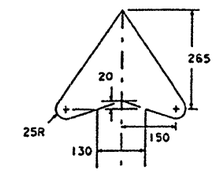

ARROW DETAIL FOR
ECW1-1, ECW1-2, ECW1-3,
ECW1-4 AND ECW1-6a.

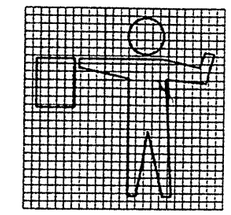

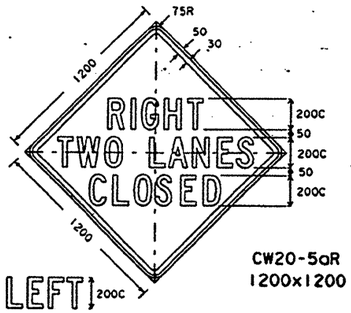

CW20-5aR
1200x1200

CW20-5aL

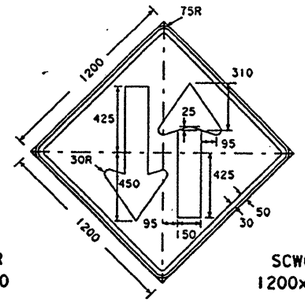

SCW6-3
1200x1200

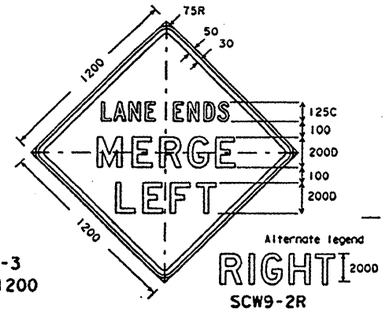

SCW9-2R

SCW9-2L
1200x1200

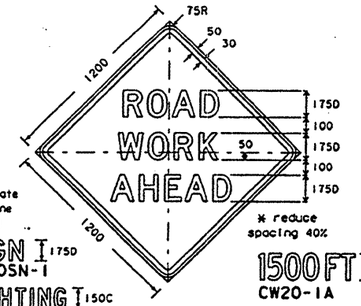

SIGN 175D
CW20SN-1
LIGHTING 150C
CW20LT-1
BRIDGE 150C
CW20BR-1
RAMP 175D
CW20RP-1

CW20-1D
1200x1200

SIGNAL 150C
CW20SG-1

1500FT 175C*
CW20-1A
1000FT 175C*
CW20-1B
500FT 175C
CW20-1C

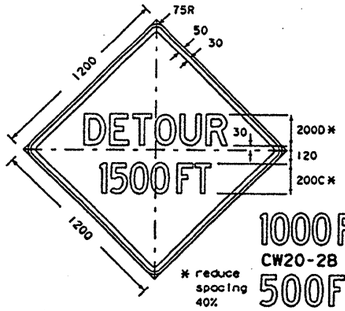

CW20-2A
1200x1200

1000FT 200C*
CW20-2B
500FT 200C
CW20-2C
AHEAD 200D
CW20-2D

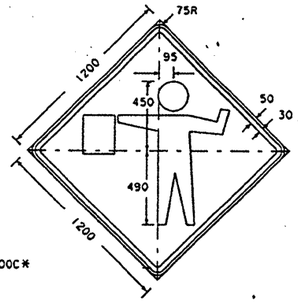

FCW20-7a
1200x1200

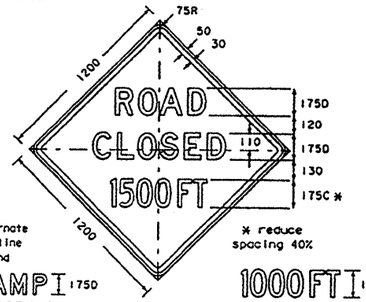

RAMP 175D
CW20RP-3
FRWY 175D
CW20FY-3
STREET 175C
CW20ST-3

CW20-3A
1200x1200

1000FT 175C*
CW20-3B
500FT 175C
CW20-3C
AHEAD 175D
CW20-3D

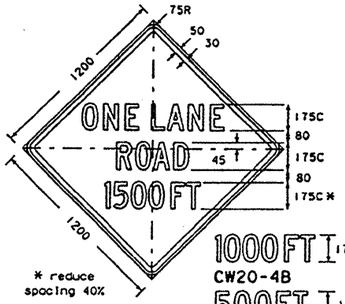

CW20-4A
1200x1200

1000FT 175C*
CW20-4B
500FT 175C
CW20-4C
AHEAD 175C
CW20-4D

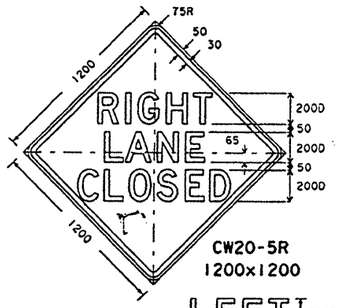

CW20-5R
1200x1200

LEFT 200D
CW20-5L

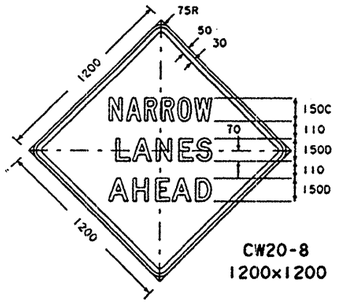

CW20-8
1200x1200

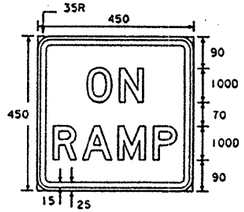

CW13-4
450x450

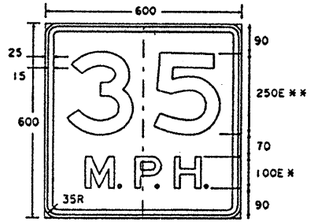

* Increase spacing 100%
** optically space numerals about vert. centerline

SCW13-1
600x600

Speed value to be determined at the site by the Engineer.

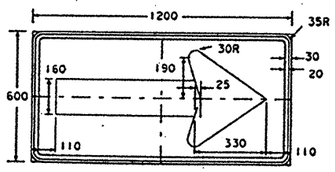

CW1-6
1200x600

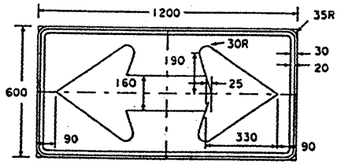

CW1-7
1200x600

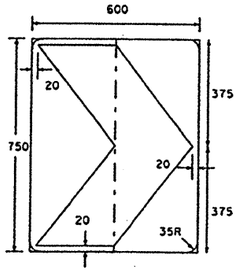

SCW1-8
600x750

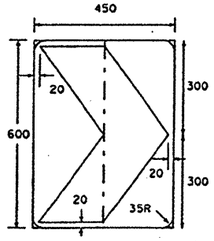

CW1-8
18" X 24"

GENERAL NOTES:
All signs detailed on this sheet shall have Black border, legend and/or symbol on an orange Type C reflective background.

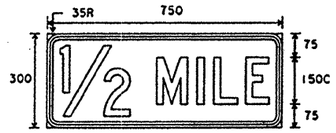

Distance Plaque
750x300

Alternate legends

1 MILE 150C 1000 FT 150C
1500 FT 150C 500 FT 150C

All dimensions are in millimeters unless otherwise noted.

STANDARD PLANS
TEXAS DEPARTMENT OF TRANSPORTATION
Traffic Operations Division

BARRICADE AND CONSTRUCTION STANDARDS

CONSTRUCTION WARNING SIGNS BC(7)-97(M)

DRIG. DRAW DATE: APRIL 1983	DN:	CK: CW	DW: ON	CK: MT	HEC NO.:
REVISIONS	STATE DISTRICT	FEDERAL REGION	FEDERAL AID PROJECT		SHEET
7-89	15	6	CD245Z-1-35		274
4-92	COUNTY			CONTROL	SECTION	JOB	HIGHWAY
2-94	BEXAR			2452	01	035	LP1604
1-97							

DISCLAIMER
The use of this standard is governed by the "Texas Engineering Practice Act". No warranty of any kind is made by TxDOT for any purpose whatsoever. TxDOT assumes no responsibility for the conversion of this standard to other formats or for incorrect results or damages resulting from its use.

LEVELS DIT	DATE:	DN:
1 2 3 4 5 6 7 8	ACC:	CK:
1 7 8 9 20 21 22 23 24	FILE:	DW:
33 34 35 36 37 38 39 40 41		CK:
49 50 51 52 53 54 55 56 57 58 59 60 61 62 63		

DISCLAIMER
The use of this standard is governed by the "Texas Eng ing Practice Act". No warranty of any kind is made by TxDOT for any purpose whatsoever. TxDOT assumes no responsibility for the conversion of this standard to other formats or for incorrect results or damages resulting from its use.

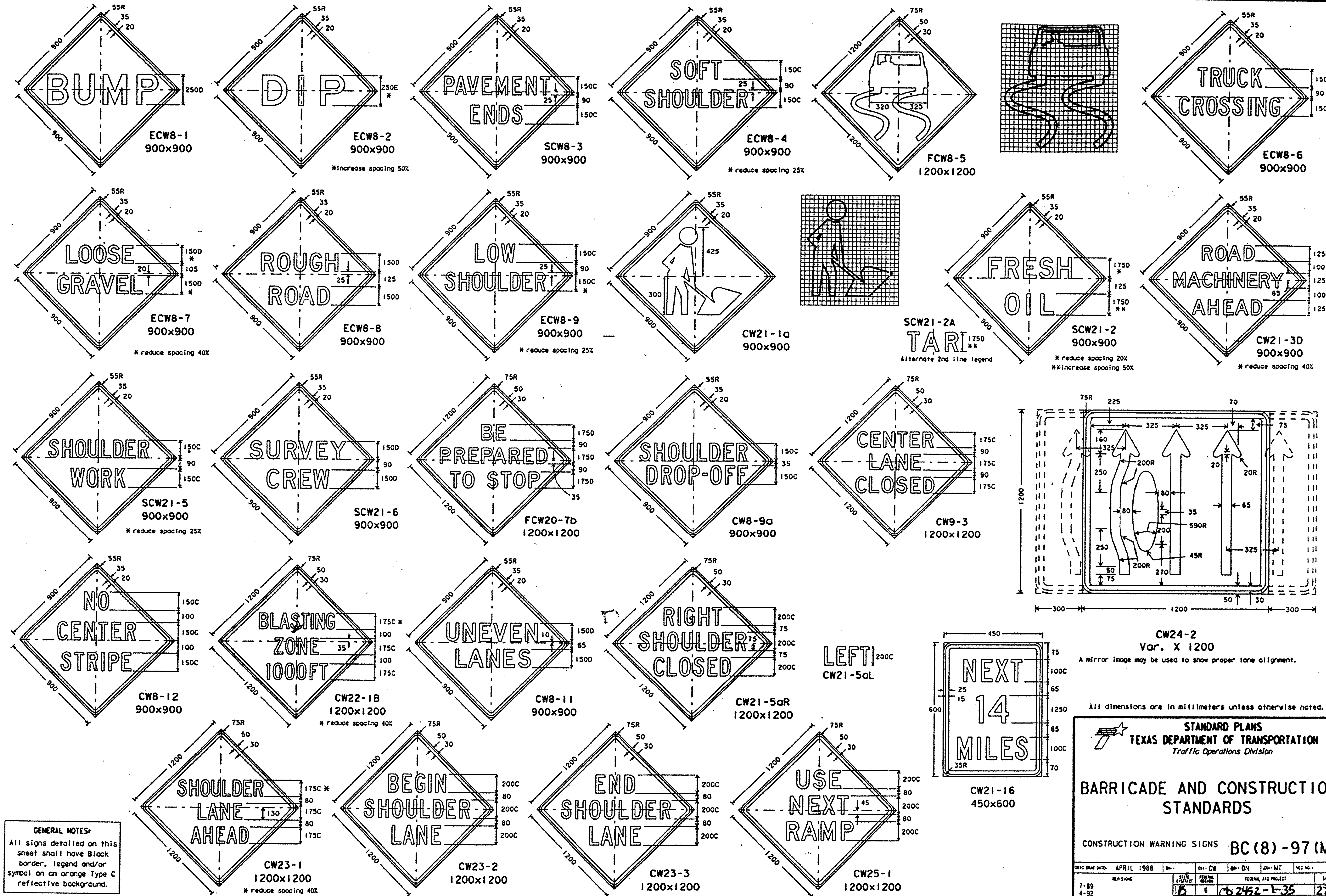

GENERAL NOTES:
All signs detailed on this sheet shall have Black border, legend and/or symbol on an orange Type C reflective background.

All dimensions are in millimeters unless otherwise noted.

STANDARD PLANS
TEXAS DEPARTMENT OF TRANSPORTATION
Traffic Operations Division

BARRICADE AND CONSTRUCTION STANDARDS

CONSTRUCTION WARNING SIGNS BC(8)-97(M)

ORIG DRAW DATE: APRIL 1988	DN:	CK: CW	DW: DN	CK: MT	REC NO.:
REVISIONS 7-89, 4-92, 2-94, 1-97	STATE DISTRICT: 15	FEDERAL REGION: 6	FEDERAL AID PROJECT: CD 2452-1-35		SHEET: 275
	COUNTY: BEXAR		CONTROL / SECTION / JOB / HIGHWAY: 2452 01 035 LP1604		

LEVELS DI...								DATE:
1	2	3	4	5	6	7	8	
17	18	19	20	21	22	23	24	ACC:
33	34	35	36	37	38	39	40	
49	50	51	52	53	54	55	56	FILE:

DN:
CK:
DW:
CK:

DISCLAIMER
The use of this standard is governed by the "Texas Engineering Practice Act". No warranty of any kind is made by TxDOT for any purpose whatsoever. TxDOT assumes no responsibility for the conversion of this standard to other formats or for incorrect results or damages resulting from its use.

WORK ZONE PAVEMENT MARKINGS

GENERAL

The Contractor shall be responsible for maintaining work zone and existing pavement markings on all roadways open to traffic within the project limits unless otherwise stated in the plans. Color, patterns, and dimensions shall be in conformance with the Texas Manual on Uniform Traffic Control Devices (TMUTCD). Additional supplemental pavement marking details may be found in the plans or specifications.

Work zone pavement markings shall consist of guidemarks, short term markings and/or standard pavement markings. Unless otherwise shown in the plans, materials used for work zone pavement markings shall be paint and beads, thermoplastic, raised pavement markers, prefabricated pavement marking material, temporary flexible-reflective roadway marker tabs or other materials approved by the Engineer. Paint and beads shall not be used for removable markings.

All roadways to be opened to traffic shall be marked with short term markings or standard markings as shown in the plans, at the end of each day's operation. Unless otherwise shown in the plans or approved in writing by the Engineer, all concrete surfaces shall have standard markings in place prior to opening to traffic.

Standard pavement markings shall be installed in accordance with the TMUTCD and as shown on the plans. When short term markings are required on the plans, short term markings shall comform with the TMUTCD, the plans and details as shown on the Standard WZ(STPM)(M).

All asphaltic surfaces which are to be opened to traffic shall be marked with guidemarks immediately following placement and final rolling of any course. Guidemarks shall consist of a single temporary flexible-reflective roadway marker tab or a single temporary construction raised pavement marker at 12 meter spacing.

Guidemarks shall be placed in proper alignment with the final location of future pavement markings. Any guidemarks not in alignment with pavement markings shall be removed by the Contractor at the Contractor's expense. Guidemarks shall not be used to simulate edgelines.

When inclement weather prohibits the application of short term markings or standard markings as called for on the plans, upon approval of the Engineer, guidemarks may be considered as temporary short term markings for asphaltic surfaces. The placement of pavement markings as shown on the plans may be delayed until such time that weather permits application of pavement markings.

When standard pavement markings are not in place and the roadway is opened to traffic, DO NOT PASS signs shall be erected to mark the beginning of the sections where passing is prohibited and PASS WITH CARE signs shall be erected to mark the beginning of the sections where passing is permitted.

RAISED PAVEMENT MARKERS

Raised pavement markers are to be placed according to the patterns on BC(10)(M). Raised pavement markers used as standard pavement markings or to supplement removable markings shall meet the requirements of Item "RAISED PAVEMENT MARKERS".

Unless otherwise shown on the plans, raised pavement markers will not be allowed for words, symbols, and shapes, diagonal or transverse lines.

PREFABRICATED PAVEMENT MARKINGS

Removable prefabricated pavement markings shall be a material of manufacture and product code or designation shown on the list of approved materials covered by the Department Materials Specification D-9-8241.

Non-removable prefabricated pavement markings (foil back) shall be a material of manufacture and product code or designation shown on the list of approved materials covered by the Specification TxDOT 550-74-01.

The lists of approved prefabricated work zone pavement marking materials may be obtained from TxDOT General Services Division.

MAINTENANCE

The Contractor will be responsible for maintaining work zone pavement markings within the project limits. Work Zone Pavement Markings shall be inspected in accordance with the frequency and reporting requirements of work zone traffic control device inspections. The markings should provide a visible reference for a minimum distance of 90 meters during normal daylight hours and 50 meters when illuminated by automobile low-beam headlights at night, unless sight distance is restricted by roadway geometrics. Markings failing to meet this criteria shall be replaced as required by the Engineer.

REMOVAL OF PAVEMENT MARKINGS

Removal of pavement markings includes centerline, channelizing lines, lane lines, edge lines, words, arrows, symbols and raised pavement markers.

Pavement markings that are no longer applicable and which may create confusion or direct a motorist toward or into the closed portion of the roadway, shall be removed or obliterated before the roadway is open to traffic. The above shall not apply to detours of a short duration of a few hours, where flagmen and/or sufficient channelizing devices are used in lieu of markings to outline the detour route and the detour is not to be maintained during nighttime.

Pavement markings shall be removed to the fullest extent possible, so as not to leave a discernible marking, by any method that does not materially damage the surface or texture of the pavement. The removal of pavement markings may require resurfacing or seal coating portions of the roadway, normally full lane widths. Subject to the approval of the Engineer, any method that proves to be successful on a particular type pavement may be used. Blast cleaning may be used but will not be required unless specifically shown in the plans. Over-painting of the markings SHALL NOT BE permitted. Removal of raised pavement markers shall be as directed by the Engineer.

Removal of existing pavement markings and markers will be paid for directly in accordance with the Item "ELIMINATING EXISTING PAVEMENT MARKINGS AND MARKERS" unless otherwise stated elsewhere in the plans.

SPECIFICATION REFERENCE TABLE

MATERIALS AND TESTS DIVISION SPECIFICATIONS	
JIGGLE BAR TILE	D-9-4100
PAVEMENT MARKERS (REFLECTORIZED)	D-9-4200
TRAFFIC BUTTONS	D-9-4300
EPOXY	D-9-6100
BITUMINOUS ADHESIVE FOR PAVEMENT MARKERS	D-9-6130
PREFABRICATED PAVEMENT MARKINGS - REMOVABLE	D-9-8241
TEMPORARY FLEXIBLE-REFLECTIVE ROADWAY MARKER TABS	D-9-8242

PREQUALIFICATION PROCEDURES MAY BE OBTAINED BY WRITING:

GENERAL SERVICES DIVISION
TEXAS DEPARTMENT OF TRANSPORTATION (TxDOT)
125 EAST 11th STREET
AUSTIN, TX 78701-2483

Temporary Construction Raised Pavement Markers used as Guidemarks:

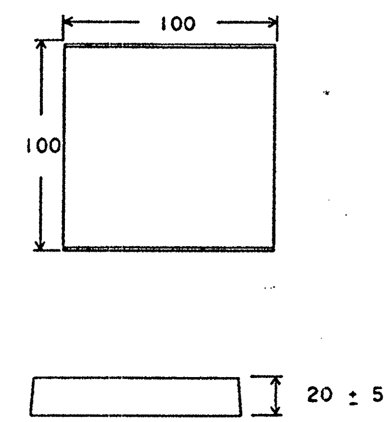

The above temporary construction raised pavement marker is shown for illustration purposes only and not intended to specify any particular product.

Temporary construction raised pavement markers used as guidemarks shall be of design and manufacture approved by the Engineer.

All temporary construction raised pavement markers provided on a project shall be of the same manufacturer.

Adhesive for guidemarks shall be bituminous material hot applied or butyl rubber pad for all surfaces, or thermoplastic for concrete surfaces.

Temporary Flexible-Reflective Roadway Marker Tabs

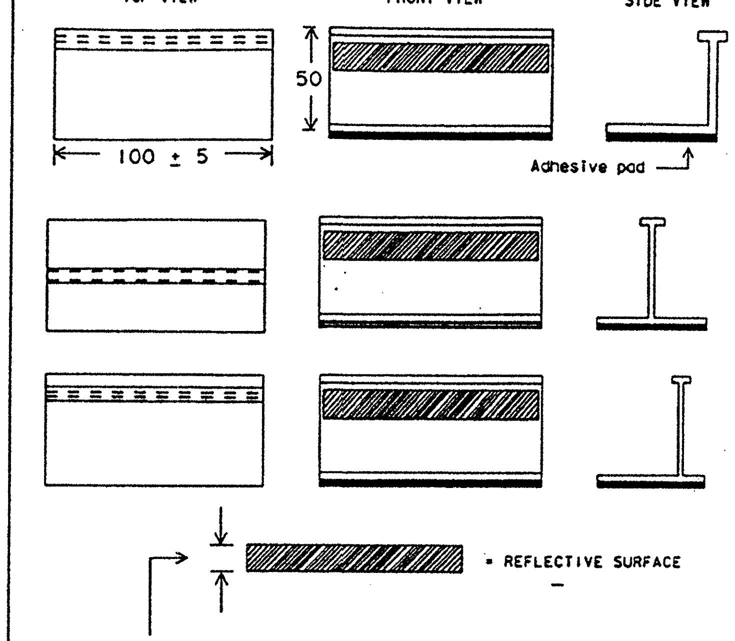

Height of sheeting will be determined by notes under MAINTENANCE.
(Usually more than 5 millimeters and less than 25 millimeters.)

STAPLES OR NAILS SHALL NOT BE USED TO SECURE TEMPORARY FLEXIBLE-REFLECTIVE ROADWAY MARKERS TABS TO THE PAVEMENT SURFACE

Temporary flexible-reflective roadway marker tabs used as guidemarks shall meet the requirements of Departmental Material Specification D-9-8242.

Tabs detailed on this sheet are to be inspected and accepted by the Engineer or designated representative. Sampling and testing is not normally required, however at the option of the Engineer, either "A" or "B" below may be imposed to assure quality before placement on the roadway.

A) Select five (5) or more tabs at random from each lot or shipment and submit to the Materials and Tests Division to determine specification compliance.
B) Select five (5) tabs and submit to the following test. Affix five (5) tabs at 600 mm intervals on an asphaltic pavement in a straight line. Using a medium size passenger vehicle or pickup, run over the markers with front and rear wheels at a speed of 35 to 40 miles per hour, four times in each direction. No more than one (1) out of five reflective surfaces shall be lost or displaced as a result of this test.

Guidemarks shall be designated as:
YELLOW - (two amber reflective surfaces with yellow body).
WHITE - (one silver reflective surface with white body).

Dimensions indicated on this sheet are typical and approximate. Variations in size and height may occur between markers or devices made by manufacturers, by as much as 5 millimeters, unless otherwise noted.

All dimensions are in millimeters unless otherwise noted.

STANDARD PLANS
TEXAS DEPARTMENT OF TRANSPORTATION
Traffic Operations Division

BARRICADE AND CONSTRUCTION STANDARDS

PAVEMENT MARKINGS — BC(9)-97(M)

ORIG DRAW DATE: APRIL 1992	DN:	CK: CW	DW: DN	CK: MT	ACC NO.:
REVISIONS: 2-94, 1-97	STATE DISTRICT: 15	FEDERAL REGION: 6	FEDERAL AID PROJECT: CB2452-1-35		SHEET: 276
	COUNTY: BEXAR	CONTROL: 2452 / 01	SECTION:	JOB: 035	HIGHWAY: IP1604

DN: CK: DW: CK: DATE: ACC: FILE:

PAVEMENT MARKING PATTERNS

CENTER LINE & NO-PASSING ZONE BARRIER LINES FOR TWO LANE TWO-WAY HIGHWAYS

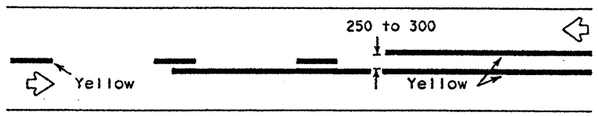

PAINT & BEAD - PATTERN A

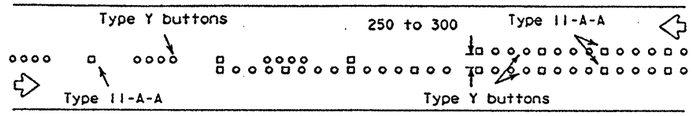

RAISED MARKERS - PATTERN A

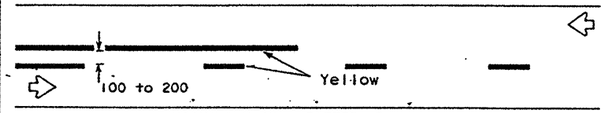

PAINT & BEAD - PATTERN B

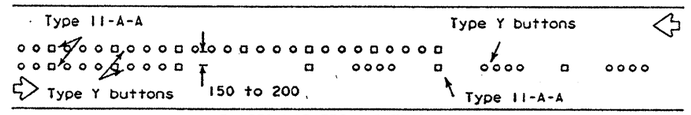

RAISED MARKERS - PATTERN B

EDGE & LANE LINES FOR DIVIDED HIGHWAY

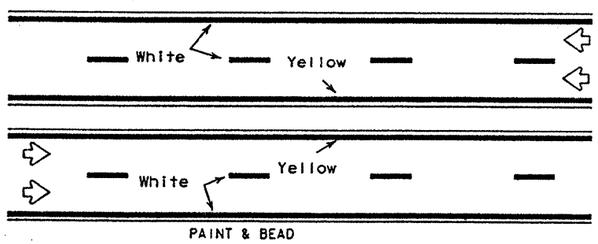

PAINT & BEAD

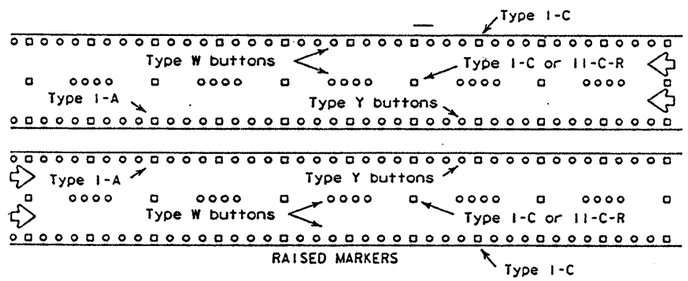

RAISED MARKERS

LANE & CENTER LINES FOR MULTILANE UNDIVIDED HIGHWAYS

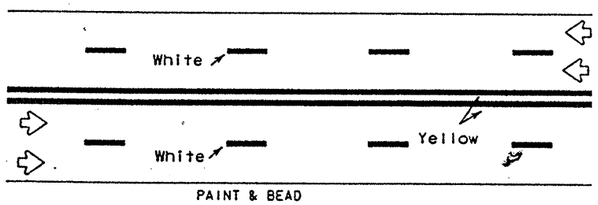

PAINT & BEAD

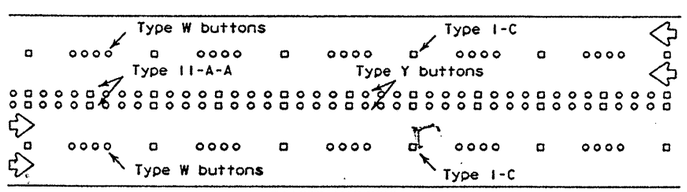

RAISED MARKERS

TWO-WAY LEFT TURN LANE

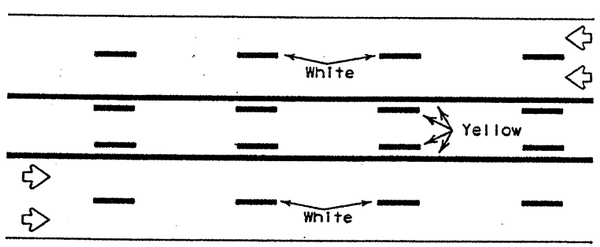

PAINT & BEAD

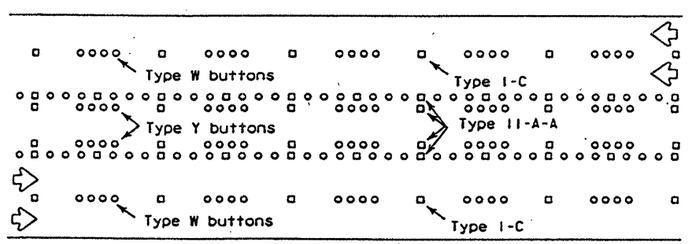

RAISED MARKERS

STANDARD WORK ZONE PAVEMENT MARKINGS DETAILS

SOLID LINES

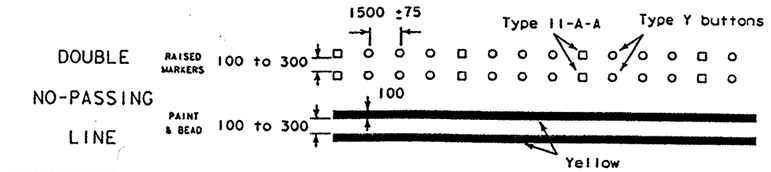

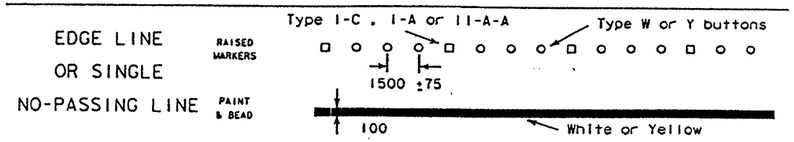

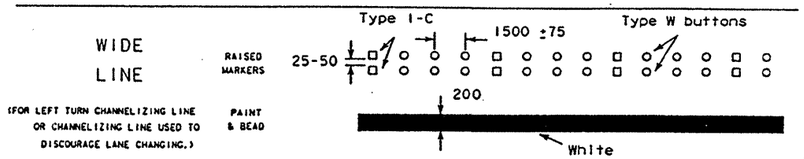

BROKEN LINE

(FOR CENTER LINE OR LANE LINE.)

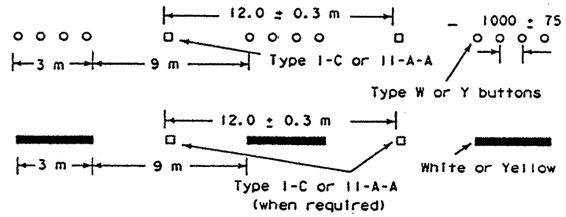

REMOVABLE MARKINGS WITH RAISED PAVEMENT MARKERS

If raised pavement markers are used to supplement REMOVABLE markings, the markers shall be applied to the top of the tape at the approximate mid length of tape used for broken lines and at approximately 6 meters spacing for solid lines. This allows an easier removal of raised markers and tape.

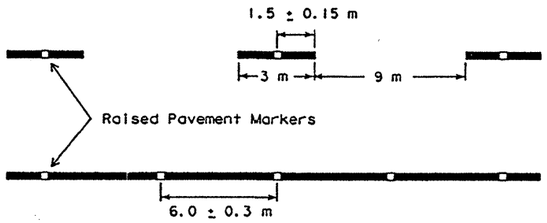

NOTES:
Pattern A is the Department Standard, however Pattern B may be used if approved by the Engineer.
Prefabricated markings may be subsitituted for paint and beads.

Raised pavement markers used as standard pavement markings shall meet the requirements of items "RAISED PAVEMENT MARKERS" and "EPOXY."

All dimensions are in millimeters unless otherwise noted.

STANDARD PLANS
TEXAS DEPARTMENT OF TRANSPORTATION
Traffic Operations Division

BARRICADE AND CONSTRUCTION STANDARDS

PAVEMENT MARKINGS — BC(10)-97(M)

ORIG. DRAW. DATE: APRIL 1992	DN: LR	CK:	DW: DN	CK: MT	MES NO.:
REVISIONS: 2-94, 1-97	STATE DISTRICT: 15	FEDERAL REGION: 6	FEDERAL A/D PROJECT: CH 2452-1-35		SHEET: 77
	COUNTY: BEXAR		CONTROL: 34801	SECTION: 1035LP1604	JOB: HIGHWAY:

DISCLAIMER
The use of this standard is governed by the "Texas Engineering Practice Act". No warranty of any kind is made by TxDOT for any purpose whatsoever. TxDOT assumes no responsibility for the conversion of this standard to other formats or for incorrect results or damages resulting from its use.

LEVELS DISPLAYED
DATE:
ACC:
FILE:
DN:
CK:
DW:
CK:

SPECIAL NOTICE TO TxDOT PROJECT ENGINEERS & CONTRACTORS:

TxDOT WILL IMPLEMENT SIGNIFICANT CHANGES TO WORK ZONE DEVICES BEGINNING WITH CONTRACTS AWARDED IN 1998. (exact date to be announced.)

SIGNS

1) Until BC-98 is issued and becomes effective, it is the contractor's option to substitute previous sign designs for the signs listed below.

TMUTCD Part VI (January 1996 edition)		Previous Sign Designation & Design	
W3-1a	STOP AHEAD symbol (yellow bkgd)	CW3-1a	STOP AHEAD symbol (orange bkgd)
W3-2a	YIELD AHEAD symbol (yellow bkgd)	CW3-2a	YIELD AHEAD symbol (orange bkgd)
W3-3	SIGNAL AHEAD symbol (yellow bkgd)	CW3-3	SIGNAL AHEAD symbol (orange bkgd)
CW8-9a	SHOULDER DROP OFF	CW21-13	SHOULDER DROP OFF (symbol & word message plaque)
CW8-11	UNEVEN LANES	CW21-14	UNEVEN LANES (symbol & word message plaque)
CW20-1D	ROAD WORK AHEAD	CW21-4D	ROAD CONSTRUCTION AHEAD*
CW20-5	RIGHT (or LEFT) TWO LANES CLOSED with distance plague	CW20-5	RIGHT (or LEFT) LANE CLOSED* with distances within sign border
		and/or CW4-2	RIGHT (or LEFT) LANE CLOSED symbol**
CW20-5a	RIGHT (or LEFT) TWO LANES CLOSED	CW23-7	TWO RIGHT (or LEFT) LANES CLOSED*
CW20-7b	BE PREPARED TO STOP	CW21-8	BE PREPARED TO STOP
CW21-7D	UTILITY WORK AHEAD	CW20-UT-1D	UTILITY WORK AHEAD
CW22-2a	TURN OFF 2-WAY RADIOS & TELEPHONES	CW22-2a	TURN OFF 2-WAY RADIOS
G20-1	ROAD WORK NEXT 5 MILES	G20-1	ROAD CONSTRUCTION NEXT 5 MILES
SG20-1	ROAD WORK NEXT 5 MILES (1200 x 450 with orange bkgd as detailed on BC(6)-97(M))	G20-1	ROAD CONSTRUCTION NEXT 5 MILES
G20-1a	ROAD WORK ⇦ NEXT 5 MILES NEXT 3 MILES ⇨	G20-1a	ROAD CONSTRUCTION ⇦ NEXT 5 MILES NEXT 3 MILES ⇨
G20-1bL	ROAD WORK ⇦ NEXT 5 MILES	G20-1bL	ROAD CONSTRUCTION ⇦ NEXT 5 MILES
SG20-6	CONTRACTOR NAME & ADDRESS (1200 x 750 with orange bkgd as detailed on BC(6)-97(M))	G20-6	CONTRACTOR NAME & ADDRESS

* - When used in a series, all signs should have consistent text, design and message. EXAMPLE: ROAD WORK AHEAD and ROAD CONSTRUCTION AHEAD signs should not be used in sequence.

** - CW4-2 LANE CLOSED symbol sign may only be used as the last sign in the lane closure signing sequence.

PROPOSED CHANGES TO: BARRICADES

2) Type II and Type III wood barricade designs will no longer be allowed. New Type II and Type III barricade designs will be fabricated from tubular steel, plastic, and other lightweight materials.
3) Barricades will not be required at the project limits. Signs erected at the project limits will be independently mounted.
4) Type I, II and III Barricades will not be allowed as sign supports.

PROPOSED CHANGES TO: SIGN SUPPORTS

5) Sign supports must be tested and approved as crashworthy.
6) Barricades, tripods and "easels" will not be allowed as sign supports.

To receive a free copy of the proposed BC-98 standards, please write or FAX:

Standards Engineer
Traffic Operations Division-TE
TxDOT
125 East 11th Street
Austin, Texas 78701-2483

FAX (512)416-3161

All dimensions are in millimeters unless otherwise noted.

STANDARD PLANS
TEXAS DEPARTMENT OF TRANSPORTATION
Traffic Operations Division

BARRICADE AND CONSTRUCTION NOTES

BC NOTES-97(M)

ORIG. GRAD DATE: January 1997	DN: MT	CK:	DW: DN	CK: MT	HCC NO.:
REVISIONS	STATE DISTRICT	FEDERAL REGION	FEDERAL AID PROJECT		SHEET
	15	6	CD 2452-1-35		227A
	COUNTY		CONTROL	SECTION	JOB	HIGHWAY
	BE X AR		2452	01	035	LP 1604

DISCLAIMER
The use of this standard is governed by the "Texas Engineering Practice Act". No warranty of any kind is made by TxDOT for any purpose whatsoever. TxDOT assumes no responsibility for the conversion of this standard to other formats or for incorrect results or damages resulting from its use.

LEVELS DISPLAYED

1	2	3	4	5	6	7	8
17	18	19	20	21	22	23	24
33	34	35	36	37	38	39	40
49	50	51	52	53	54	55	56
65	66	67	68	69	70	71	72
81	82	83	84	85	86	87	88
97	98	99	100	101	102	103	104
113	114	115	116	117	118	119	120

1	2	3	4	5	6		
17	18	19	20	21	22	23	24
33	34	35	36	37	38	39	40
49	50	51	52	53	54	55	56
65	66	67	68	69	70	71	72
81	82	83	84	85	86	87	88
97	98	99	100	101	102	103	104
113	114	115	116	117	118	119	120

DATE:
ACC:
FILE:

DN:
CK:
DW:
CK:

WORK ZONE SHORT TERM PAVEMENT MARKINGS DETAILS

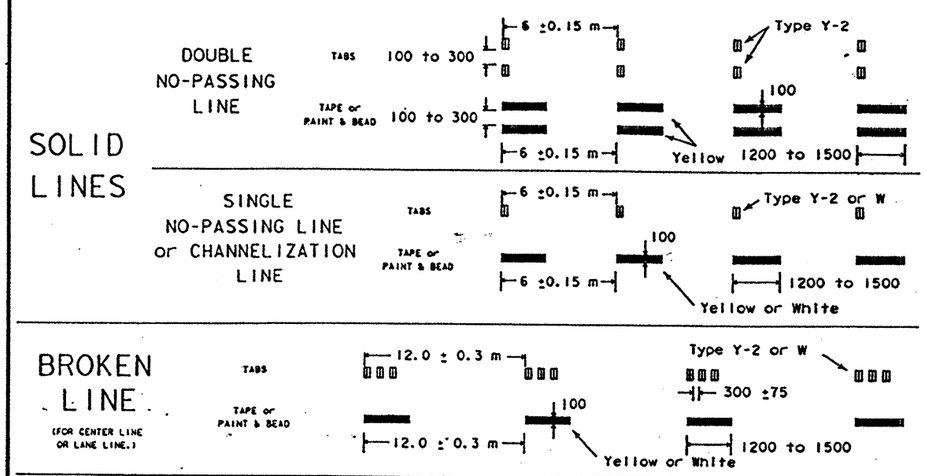

NOTES:

1. Short term pavement markings may be paint and beads, prefabricated markings (stick down tape) or temporary flexible-reflective roadway marker tabs unless otherwise specified elsewhere in plans. Paint and beads shall not be used as removable short term pavement markings.
2. Short term pavement markings shall NOT be used to simulate edge lines.
3. Dimensions indicated on this sheet are typical and approximate. Variations in size and height may occur between markers or devices made by manufacturers, by as much as 6 mm, unless otherwise noted.
4. Temporary flexible-reflective roadway marker tabs will require normal maintenance replacement when used on roadways with an ADT per lane of up to 7500 vehicles with no more than 10% truck mix. When roadways exceed these values, additional maintenance replacement of devices should be planned.
5. No segment of roadway open to traffic shall remain without standard pavement markings for a period greater than 14 calendar days. The Contractor will be responsible for maintaining short term pavement markings until standard pavement markings are in place. When the Contractor is responsible for placement of standard pavement markings, no segment of roadway shall remain without standard pavement markings for a period greater than 14 calendar days unless weather conditions prohibit placement. Standard pavement markings shall be placed as soon as weather permits.
6. For two lane, two-way roadways, DO NOT PASS signs shall be erected to mark the beginning of sections where passing is prohibited and PASS WITH CARE signs shall be erected to mark the beginning of sections where passing is permitted. Signs shall be in accordance with the TMUTCD and may be used to indicate the limits of no-passing zones for up to 14 calendar days. Standard pavement markings should then be placed.
7. For low volume two lane, two-way roadways of 4000 ADT or less, no-passing lines may be omitted when approved by the Engineer. DO NOT PASS and PASS WITH CARE signs shall be erected (see note 6).

TEMPORARY FLEXIBLE-REFLECTIVE ROADWAY MARKER TABS (TABS)

1. Temporary flexible-reflective roadway marker tabs detailed on this sheet will be designated Type Y-2 (two amber reflective surfaces with yellow body); Type Y (one amber reflective surface with yellow body); and Type W (one silver reflective surface with white body). Additional details may be found on BC(8).
2. Tabs shall meet requirements of Department Material Specification D-9-8242.
3. The body of Tabs shall consist of a base and vertical wall made of polyurethane, polyester elastomer or other material approved by the Materials and Tests Division.
4. The reflective material shall be protected with an easily removable heat resistant transparent cover capable of withstanding and protecting reflective material from application of 205 degree Celsius asphalt. Stapling or clipping devices used to retain the protective cover shall not protrude through reflective material.
5. Tabs detailed on this sheet are to be inspected and accepted by the Engineer or designated representative. Sampling and testing is not normally required, however at the option of the Engineer, either "A" or "B" below may be imposed to assure quality before placement on the roadway.
   A) Select five (5) or more tabs at random from each lot or shipment and submit to the Materials and Tests Division to determine specification compliance.
   B) Select five (5) tabs and submit to the following test. Affix five (5) tabs at 600 millimeter intervals on an asphaltic pavement in a straight line. Using a medium size passenger vehicle or pickup, run over the markers with front and rear wheels at a speed of 35 to 40 miles per hour, four times in each direction. No more than one (1) out of five reflective surfaces shall be lost or displaced as a result of this test.
6. When dry, tabs shall be visible for a minimum distance of 60 meters during normal daylight hours and when illuminated by automobile low-beam headlight at night, unless sight distance is restricted by roadway geometrics.
7. No two consecutive tabs nor four tabs per 300 meters of line shall be missing or fail to meet the visual performance requirements of note 6.

REMOVABLE - PREFABRICATED PAVEMENT MARKINGS

1. Prefabricated Pavement Markings shall be a material of manufacture and product code or designation shown on list of approved materials covered by Materials and Tests Divisions Specification: D-9-8241.

NON REMOVABLE - PREFABRICATED PAVEMENT MARKINGS (FOIL BACK)

1. Prefabricated Pavement Markings shall be a material of manufacture and product code or designation shown on list of approved material covered by Specification TxDOT- 550-74-01.

RAISED PAVEMENT MARKERS

1. Raised pavement markers used to supplement short term removable pavement markings shall meet the requirements of item "RAISED PAVEMENT MARKERS".

WORK ZONE SHORT TERM PAVEMENT MARKINGS PATTERNS

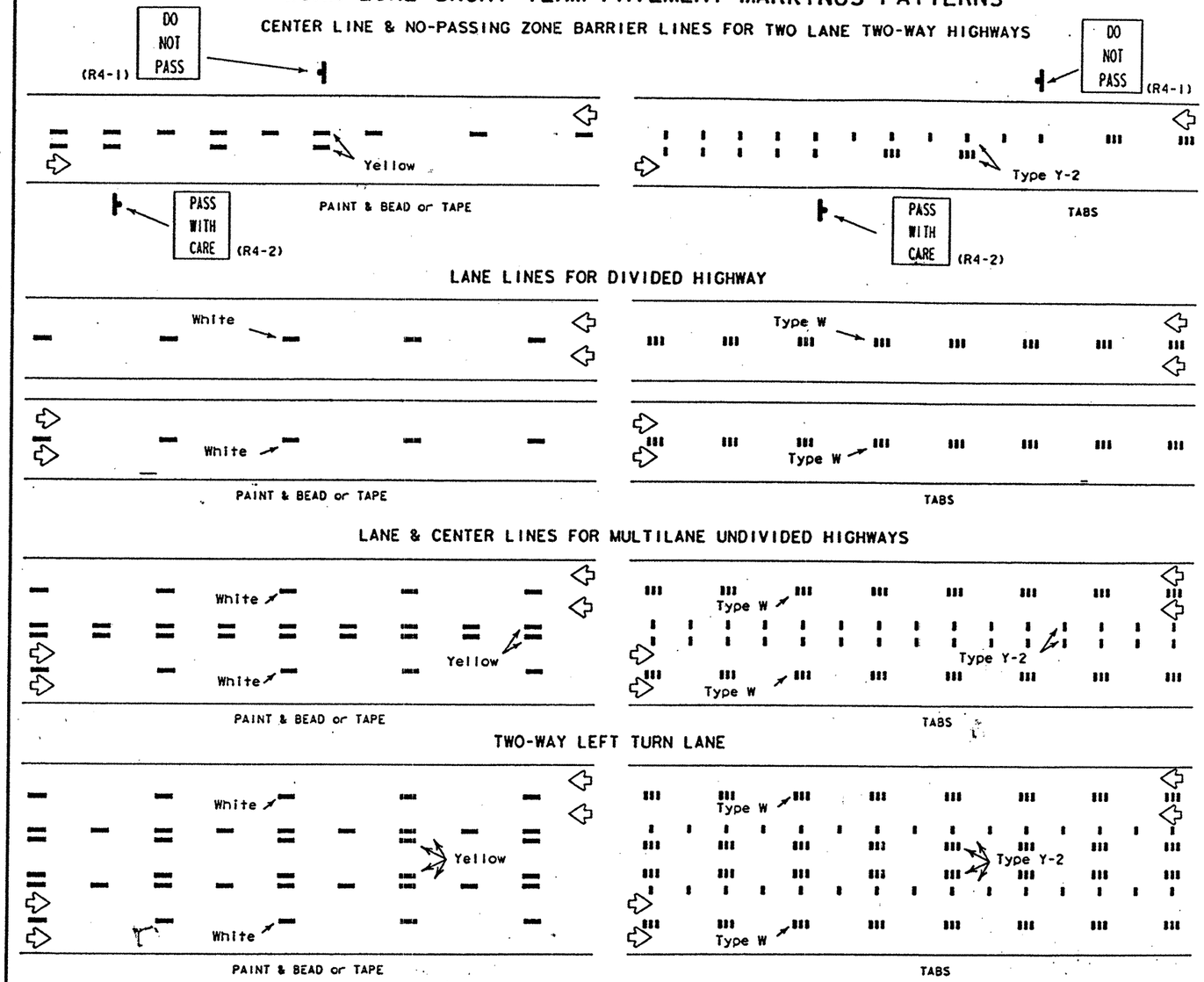

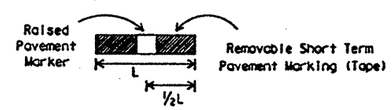

If raised pavement markers are used to supplement REMOVABLE short term markings, the markers shall be applied to the top of the tape at the approximate mid length of the tape. This allows an easier removal of raised markers and tape.

All dimensions are in millimeters unless otherwise noted.

SPECIFICATION REFERENCE TABLE

MATERIALS AND TESTS DIVISION SPECIFICATIONS	
PREFABRICATED PAVEMENT MARKINGS-REMOVABLE	D-9-8241
TEMPORARY FLEXIBLE-REFLECTIVE ROADWAY MARKER TABS	D-9-8242
PAVEMENT MARKERS (REFLECTORIZED)	D-9-4200

STANDARD PLANS
TEXAS DEPARTMENT OF TRANSPORTATION
Traffic Operations Division

WORK ZONE SHORT TERM PAVEMENT MARKINGS

WZ(STPM)-97(M)

ORIG. GRAND DATE: APRIL 1992	DN: LR	CK:	DW: ON	CK: MT	HEC NO.:	
REVISIONS	STATE DISTRICT	FEDERAL REGION	FEDERAL AID PROJECT			SHEET
1-97	15	6	CBS 2452-1-35			278
	COUNTY			CONTROL	SECTION	JOB	HIGHWAY
	BEXAR			2452	01	036	LP1604

DISCLAIMER:
The use of this standard is governed by the "Texas Engineering Practice Act". No warranty of any kind is made by TxDOT for any purpose whatsoever. TxDOT assumes no responsibility for the conversion of this standard to other formats or for incorrect results or damages resulting from its use.

DISCLAIMER
The use of this standard is governed by the "Texas Engineering Practice Act". No warranty of any kind is made by TxDOT for any purpose whatsoever. TxDOT assumes no responsibility for the conversion of this standard to other formats or for incorrect results or damages resulting from its use.

DELINEATION OF SAFETY END TREATMENTS

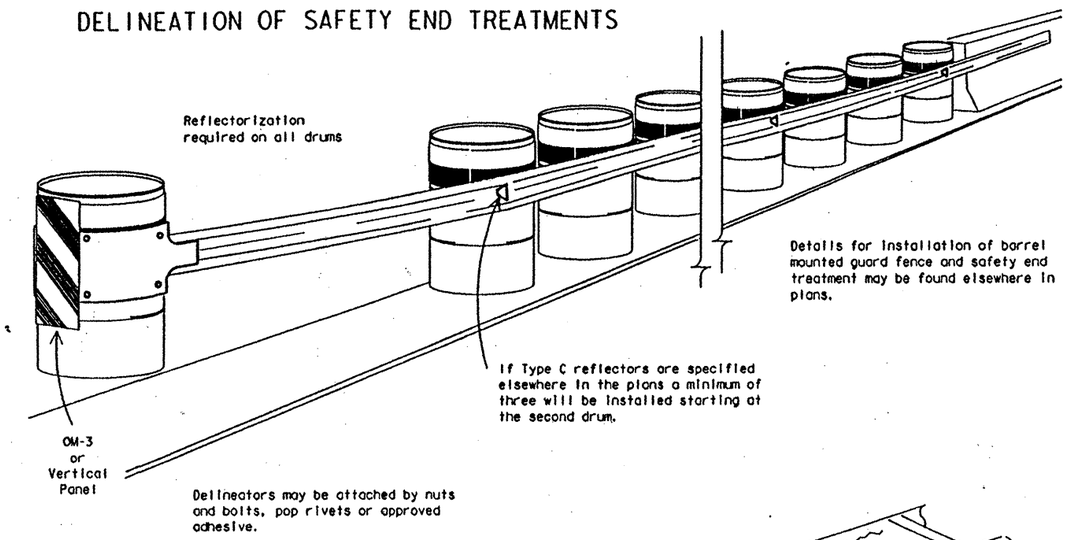

	APPROACHING TRAFFIC	
	BOTH SIDES	ONE SIDE
DELINEATION	OM-1	OM-3 or Vertical Panel

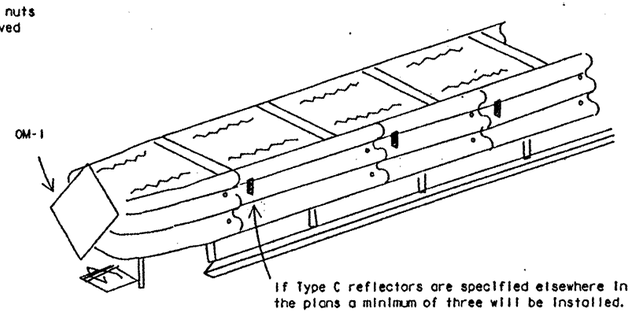

BARRIER DELINEATION WITH SAFETY GLARE FENCE

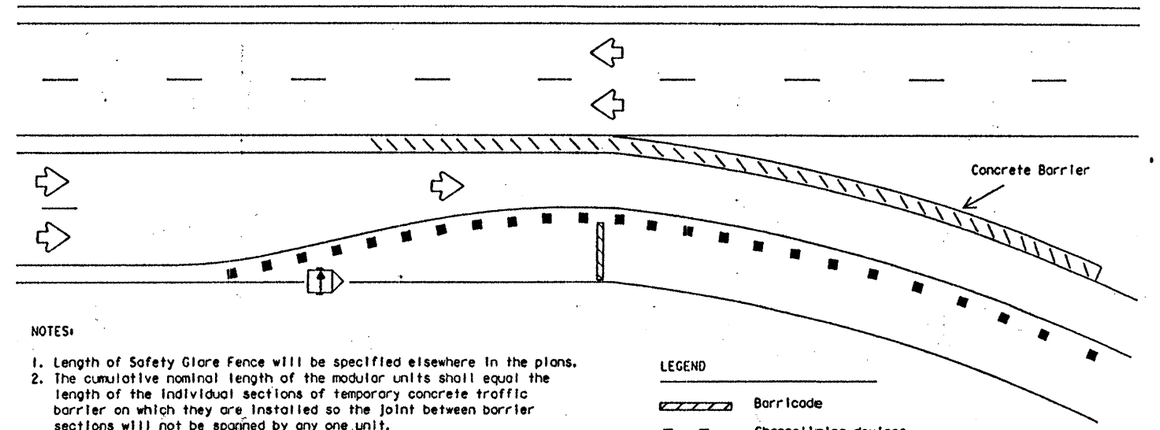

NOTES:

1. Length of Safety Glare Fence will be specified elsewhere in the plans.
2. The cumulative nominal length of the modular units shall equal the length of the individual sections of temporary concrete traffic barrier on which they are installed so the joint between barrier sections will not be spanned by any one unit.
3. Panel/blades will be designed such that reflective sheeting conforming with Departmental Specification D-9-8300, Type C, minimum size of 50 mm by 300 mm can be attached to the edge of the panel/blade. The sheeting shall be attached to one panel/blade per section of concrete barrier not to exceed a spacing of 9 meters. Barrier reflectors are not necessary when panel/blades are installed.

LEGEND

- Barricade
- Channelizing devices
- Trailer mounted flashing arrow panel
- Safety glare fence

REFLECTORS FOR CONCRETE TRAFFIC BARRIER, BARREL MOUNTED GUARD FENCE, AND ATTENUATORS

Type C reflectors may be installed using pop rivets, nuts and bolts, construction adhesive or butyl rubber adhesive.

Type C reflectors shall be prequalified and shall conform to the color and reflectivity requirements of Specification D-9-8600.

Color of Type C reflector will be the same as the nearest edge line, gore pavement marking or as directed by the Engineer.

Unless stated elsewhere in the plans, reflectorization of metal drums, delineation and reflectors shown on this standard shall be considered subsidiary to the various bid items.

PREQUALIFICATION PROCEDURES ARE OBTAINED FROM:

MATERIALS AND TESTS DIVISION
TEXAS DEPARTMENT OF TRANSPORTATION (TxDOT)
125 EAST 11th STREET
AUSTIN, TX 78701-2483

SPECIFICATION REFERENCE TABLE

MATERIALS AND TESTS DIVISION SPECIFICATIONS	
EPOXY	D-9-6100
BITUMINOUS ADHESIVE	D-9-6130
ALUMINUM SIGN BLANKS	D-9-7110
FLAT SURFACE REFLECTIVE SHEETING, TYPE C (HIGH SPECIFIC INTENSITY)	D-9-8300
DELINEATOR AND OBJECT MARKER	D-9-8600

All dimensions are in millimeters unless otherwise noted.

REFLECTORIZATION OF METAL DRUMS FOR BARREL MOUNTED GUARD FENCE

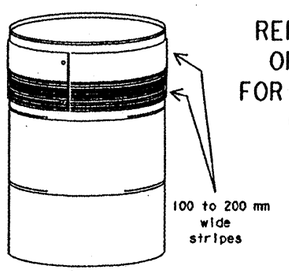

The following specification is intended to detail the reflectorization of metal drums used to support barrel mounted guard fence. Metal drums shall not be used as a standalone channelizing device or sign support.

Markings on drums shall be horizontal, circumferential, reflectorized orange and reflectorized white stripes, 100 to 200 mm wide. The first reflectorized stripe should start within four inches of the top of the drum. There shall be at least one orange and one white stripe on each drum. If there is a non reflectorized space between the horizontal orange and white stripes, it shall be no more than 50 mm wide. Reflectorized material shall conform with Specification D-9-8300 Type C (High Specific Intensity).

All drums on project will be orange.

CONCRETE TRAFFIC BARRIER (CTB)

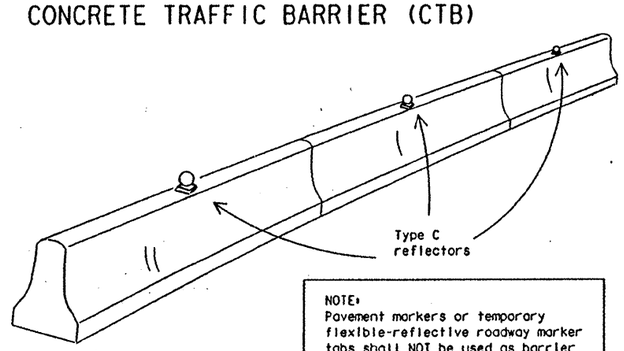

NOTE:
Pavement markers or temporary flexible-reflective roadway marker tabs shall NOT be used as barrier delineation.

LOW PROFILE CONCRETE BARRIER (LPCB)

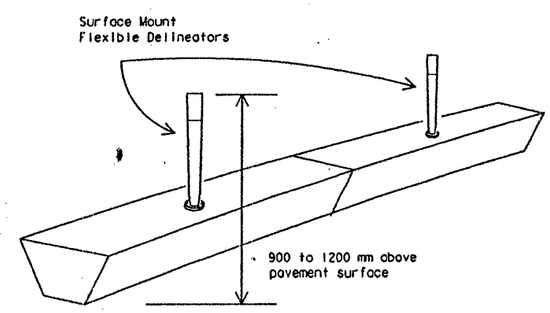

Barrier reflectors will be installed only on barriers designated for reflectorization as required elsewhere in the plans.

Reflectors should be mounted one reflector per section of barrier, preferably in the center.

Maximum spacing of reflectors is 12 meters for CTB and 6 meters for LPCB. Mount reflectors to barrier with construction adhesive or butyl rubber adhesive.

Color of barrier reflectors will conform to the Texas "Manual on Uniform Traffic Control Devices", (TMUTCD).

STANDARD PLANS
TEXAS DEPARTMENT OF TRANSPORTATION
Traffic Operations Division

WORK ZONE BARRIER DELINEATION

WZ(BD)-97(M)

ORIG. GRAD DATE: APRIL 1992	DN: LR/MT	CK:	DW: DN	CK: MT	REV. NO.:
REVISIONS: 8-95, 1-97	STATE DISTRICT: 15	FEDERAL REGION: 6	FEDERAL AID PROJECT: CD 2452-1-35		SHEET: 279
COUNTY: BEXAR	CONTROL: 2452	SECTION: 01	JOB: 035	HIGHWAY: LP1604	

Metric 113

LEVELS DISPLAYED	DATE:	DN:
	ACC:	CK:
	FILE:	DW:
		CK:

DISCLAIMER
The use of this s...dard is governed by the "Texas En...ering Practice Act". No warranty of any kind is made by TxDOT for any purpose whatsoever. TxD... assumes no responsibility for the conversion of this standard to other formats or for incorrect results or damages resulting from its use.

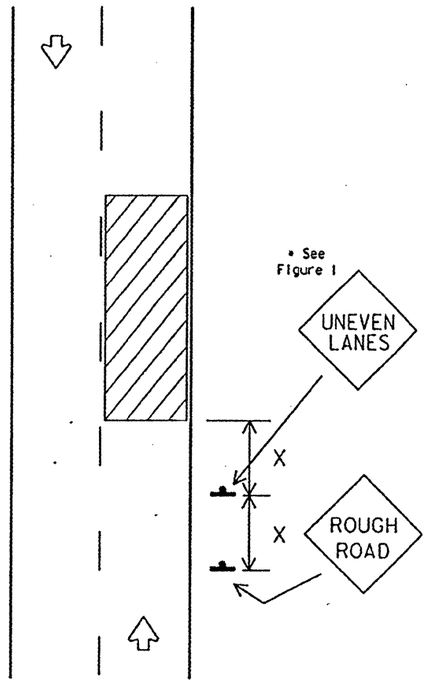

Signing shown for one direction.

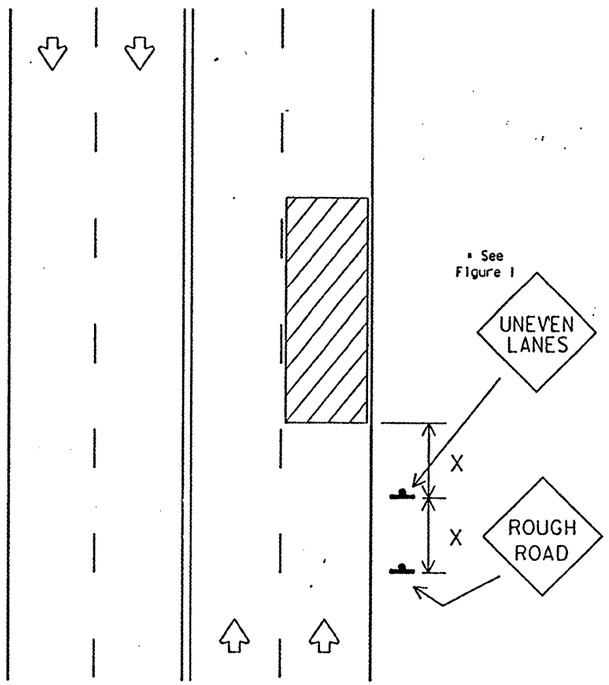

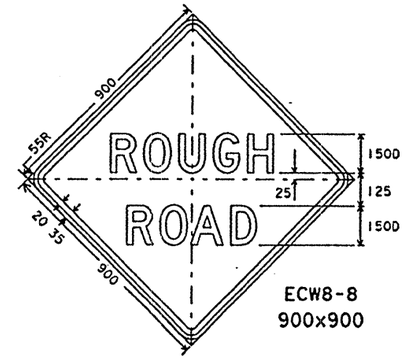

ECW8-8
900x900

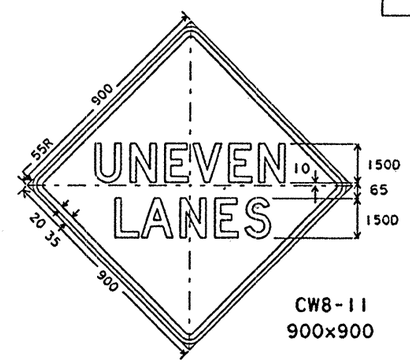

CW8-11
900x900

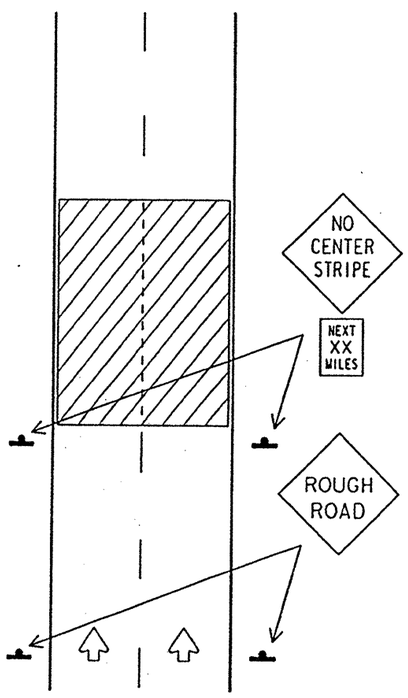

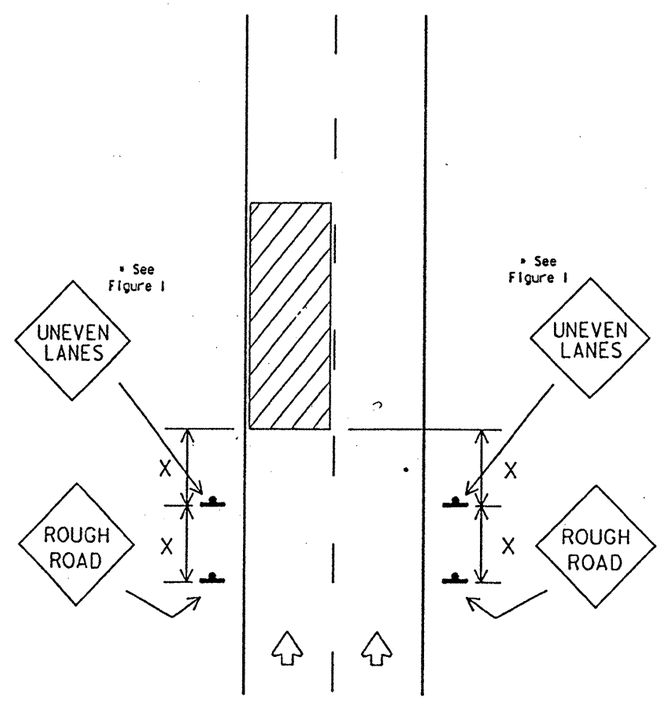

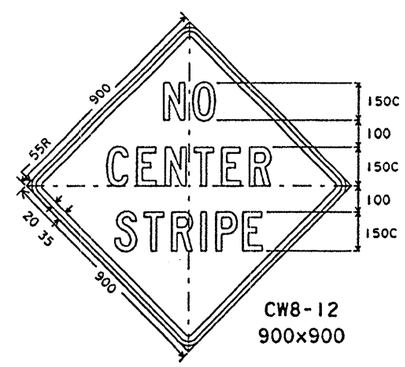

CW8-12
900x900

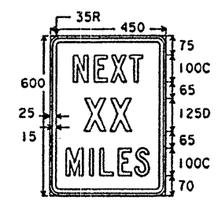

CW21-16
450x600

TRAFFIC CONTROL DURING PLANING, OVERLAY AND LEVELING OPERATIONS ARE SHOWN ELSEWHERE IN THE PLANS.

FIGURE 1

Edge Condition	Edge Height (D)	Warning Devices
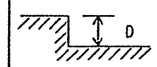	less than or equal to 25 mm	Signs: ECW8-8
	greater than 25 to: 30 mm (maximum-planing) 35 mm (maximum-overlay)	Signs: CW8-11, ECW8-8

Distance "D" may be a maximum of 30 mm for planing operations and 35 mm for overlay operations if uneven lanes are open to traffic after work operations cease.

SPECIFICATION REFERENCE TABLE
MATERIALS AND TESTS DIVISION SPECIFICATIONS

PLYWOOD SIGN BLANKS	D-9-7100
ALUMINUM SIGN BLANKS	D-9-7110
SIGN HARDWARE	D-9-7120
PREFABRICATED PAVEMENT MARKINGS-PERMANENT	D-9-8240
PREFABRICATED PAVEMENT MARKINGS-REMOVABLE	D-9-8241
REFLECTIVE SHEETING, TYPE A (ENGINEER GRADE) (FOR WHITE SERIES SIGNS ON THIS SHEET)	D-9-8300
REFLECTIVE SHEETING, TYPE C (HIGH SPECIFIC INTENSITY) (FOR ORANGE SERIES SIGNS ON THIS SHEET)	D-9-8300

GENERAL NOTES:

1. If spalling or holes occur, ROUGH ROAD signs should be placed in advance of the condition and may be repeated throughout the project.
2. UNEVEN LANES sign (CW8-11) should be installed in advance of the condition and repeated every 1.6 km. Signs installed along the uneven lane condition may be supplemented with the NEXT XX MILES sign (CW21-16) or Advisory Speed sign (CW13-1).
3. NO CENTER STRIPE signs (CW8-12) should be installed if centerlines or lane lines are obscured or obliterated. The signs should remain in place until standard pavement markings are installed.
4. Signs shall be spaced at the distances recommended as per BC standards.
5. When operations are completed and final surface treatment will not be applied as part of this project, advance signs shall be left in place and become the property of the State. These signs shall be installed on driveable sign supports as per Department standards. Additional signs may be required as directed by the Engineer. Minimum mounting height of signs is 2.1 meters minimum. Signs shall remain in place until final surface is applied. Signs shall be considered subsidiary to the item "BARRICADES, SIGNS AND TRAFFIC HANDLING."
6. Pavement markings shall be replaced as operations proceed. Raised reflective pavement markers or prefabricated foil backed tape should be used.
7. Short term markings shall not be used to simulate edge lines.

All dimensions are in millimeters unless otherwise noted.

GENERAL NOTES:
All signs detailed on this sheet shall have black border, legend and/or symbol on an orange reflective background.

STANDARD PLANS
TEXAS DEPARTMENT OF TRANSPORTATION
Traffic Operations Division

SIGNING FOR UNEVEN LANES

WZ(UL)-97(M)

DWG DRAW DATE: APRIL 1992	CK: MT	CK:	DN: DN	CK: MT	NEG NO.:
REVISIONS 8-95 1-97	STATE DISTRICT 15	FEDERAL REGION 6	FEDERAL AID PROJECT CD2452-1-35		SHEET 280
	COUNTY REXRO		CONTROL 2452	SECTION 01	JOB 035 / HIGHWAY PLAN

DISCLAIMER
The use of this standard is governed by the "Texas Engineering Practice Act". No warranty of any kind is made by TxDOT for any purpose whatsoever. TxDOT assumes no responsibility for the conversion of this standard to other formats or for incorrect results or damages resulting from its use.

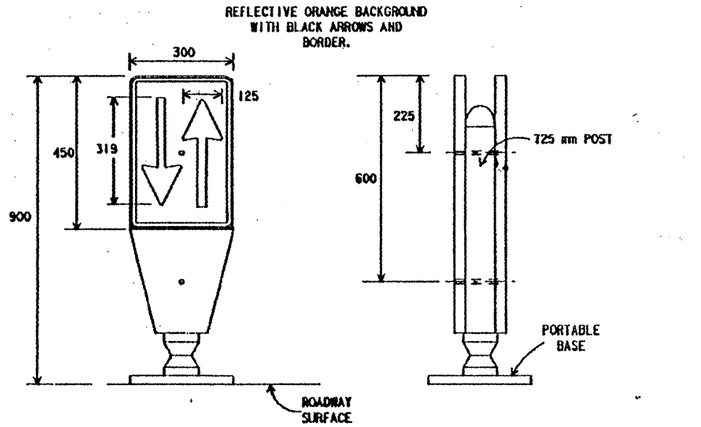

PORTABLE BASE SUPPORT
for Opposing Lane Divider

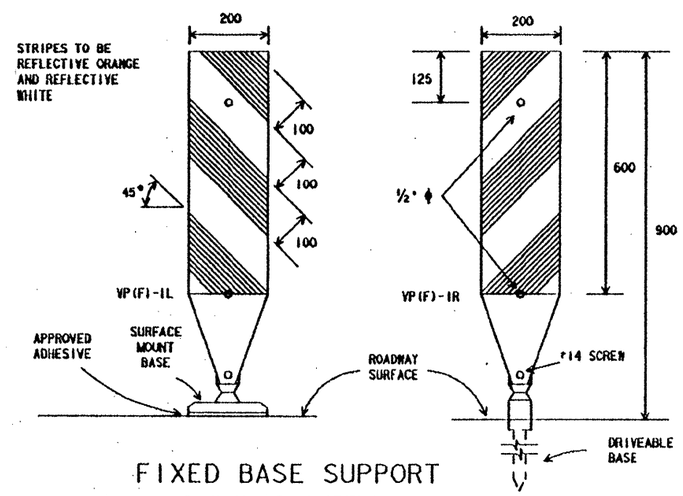

FIXED BASE SUPPORT
for Vertical Panels VP(F)-1

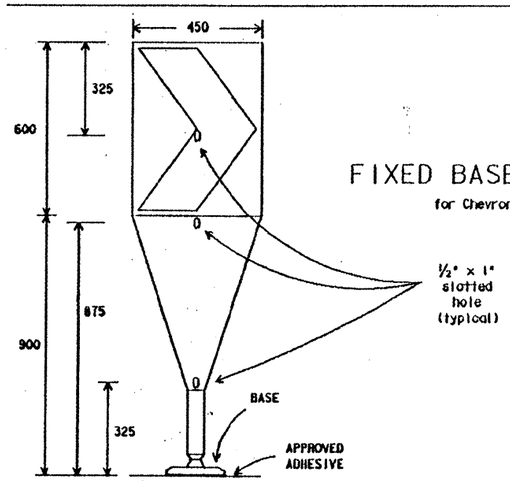

FIXED BASE SUPPORT
for Chevrons CWI-8(F)

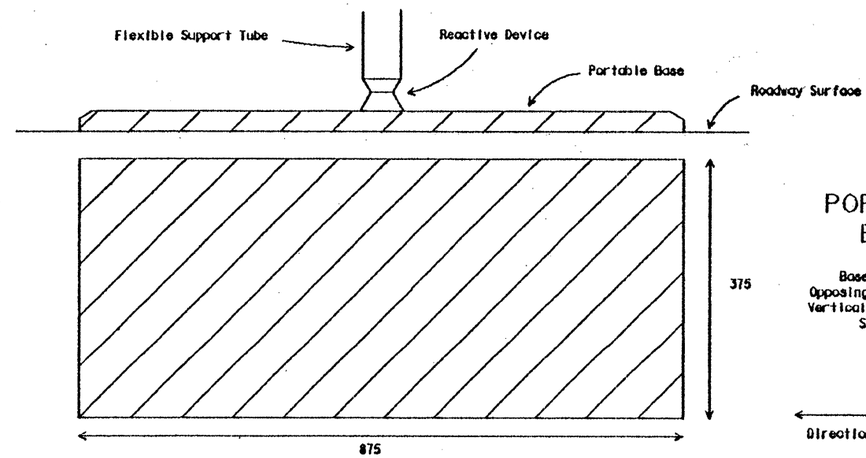

PORTABLE BASE

Base Support for Opposing Lane Divider or Vertical Panel (VP(F)-1). See Note 5.

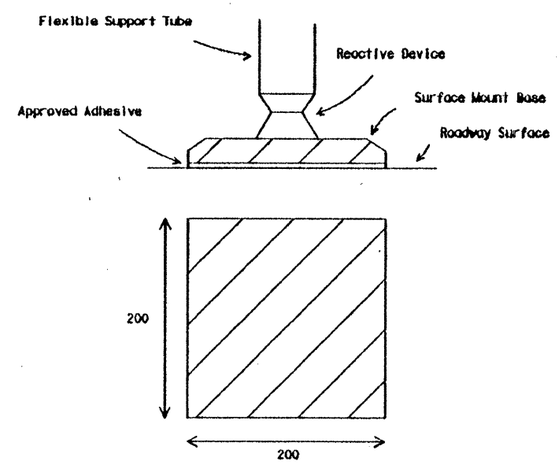

SURFACE MOUNT BASE

Fixed Base Support for Chevron CWI-8(F), Vertical Panels VP(F)-1 or Opposing Lane Divider.

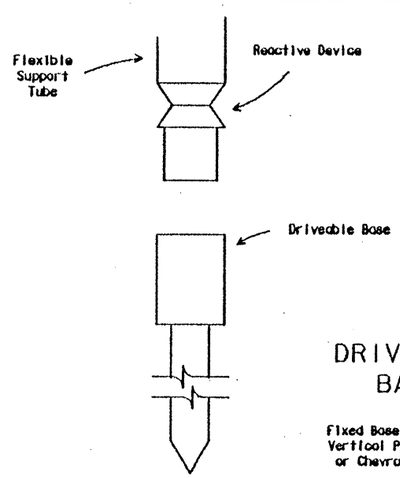

DRIVEABLE BASE

Fixed Base Support for Vertical Panel VP(F)-1 or Chevron CWI-8(F).

GENERAL NOTES:

1. Channelizing devices on flexible supports shall be used at locations detailed elsewhere in the plans. These devices shall conform to the Texas MUTCD.
2. Channelizing devices on flexible supports may be used in work zone areas where channelizing devices are frequently impacted by errant vehicles. Work zone channelizing devices illustrated on this sheet may be installed in close proximity to traffic and are suitable for use on high or low speed roadways. Spacing and placement shall be uniform and in accordance with the Texas MUTCD.
3. The contractor shall maintain devices in a clean condition and replace damaged, non-reflective, faded, or broken devices and bases as necessary.
4. Devices shall be fabricated to withstand repeated impacts with minimal maintenance to devices and damage to vehicles. When devices are impacted, they should not adversely affect worker or vehicle safety.
5. Devices shall be erected on a fixed, portable, or driveable base as approved by the Engineer.
6. Portable bases shall be fabricated from a flexible material such as virgin and/or recycled rubber. Approximate weight of portable bases should be 16 kg.
7. Fixed bases may be surface mount or driveable type.
8. Pavement surfaces shall be prepared in a manner that will insure proper bonding of adhesives and surface mount bases to the pavement surfaces. Adhesives shall be prepared and applied as per manufacturer's recommendations.
9. Application and removal of devices shall not cause detrimental effects to the final pavement surfaces, including pavement surface discoloration or surface intregity. Driveable bases shall not be permitted on final pavement surfaces. All application and removal procedures of fixed bases shall be approved by the Engineer.
10. These devices shall not be paid for directly but shall be considered subsidiary to the item "Barricades, Signs, and Traffic Handling."

PREQUALIFICATION PROCEDURES MAY BE OBTAINED BY WRITING:

TRAFFIC OPERATIONS DIVISION
TEXAS DEPARTMENT OF TRANSPORTATION (TxDOT)
125 EAST 11th STREET
AUSTIN, TX 78701-2483

SPECIFICATION REFERENCE TABLE
MATERIALS AND TEST DIVISION SPECIFICATIONS

FLAT SURFACE REFLECTIVE SHEETING, TYPE C (HIGH SPECIFIC INTENSITY) D-9-8300

All dimensions are in millimeters unless otherwise noted.

STANDARD PLANS
TEXAS DEPARTMENT OF TRANSPORTATION
Traffic Operations Division

WORK ZONE CHANNELIZING DEVICES ON FLEXIBLE SUPPORTS

WZ(CD)-94(M)

FILE: dsbpio/wzr/d580504	DN: DN	CK: MT			
9-94	Jan 1992	RB		DN	
15	6	Cb 2452-1-35			281
BEXAR		2452	01	03	

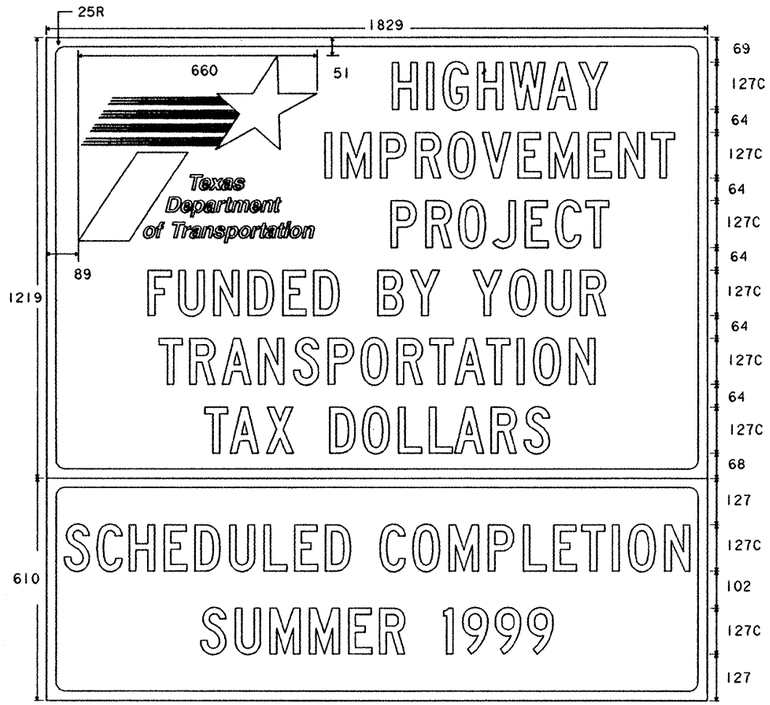

G20-8

1829 x 1219 sign
TxDOT logo - standard red & blue
Background - white
Legend & border - blue

1829 x 610 plaque
Background - blue
Legend & border - white

SPECIFICATION REFERENCE TABLE
MATERIALS AND TESTS DIVISION SPECIFICATIONS

PLYWOOD SIGN BLANKS	D-9-7100
ALUMINUM SIGN BLANKS	D-9-7110
REFLECTIVE SHEETING, TYPE A (ENGINEER GRADE)	D-9-8300
REFLECTIVE SHEETING, TYPE C (HIGH SPECIFIC INTENSITY)	D-9-8300
SIGN HARDWARE	D-9-7120

COLOR	USAGE	REFLECTIVE SHEETING OR OTHER MATERIAL
BLUE	BACKGROUND	TYPE C (HIGH SPECIFIC INTENSITY)
WHITE	BACKGROUND	TYPE A (ENGINEER GRADE)
BLUE	LEGEND & BORDER	TYPE C (HIGH SPECIFIC INTENSITY)
WHITE	LEGEND & BORDER	TYPE A (ENGINEER GRADE)

GENERAL NOTES:

The alphabets and lateral spacing between letters and numerals shall conform with the Texas 'Manual on Uniform Traffic Control Devices for Streets and Highways', latest edition, and any approved changes thereto. Lateral spacing of text shall provide a balanced appearance. All materials shall conform to Department Specifications.

Legend and border may be applied by reverse screening process with transparent colored ink, cut-out white reflective sheeting applied to colored background or combination thereof. Background shall be reflective sheeting (Type A).

Sign blanks for roadside mounted guide signs shall be 16 mm thick plywood (Type A) or extruded aluminum, unless otherwise noted elsewhere in the plans. Dimensions shown for borders and corner radii are nominal. Borders may vary in width as much as 13 mm. Borders and corner radii must be of matching widths. The sign area outside the corner radius need not be trimmed or rounded. Panels attached below the parent sign shall be made of the same material as the parent sign, or as specified on the sign tabulation sheet.

Mounting details are shown on Standard Plan Sheets SMD series.

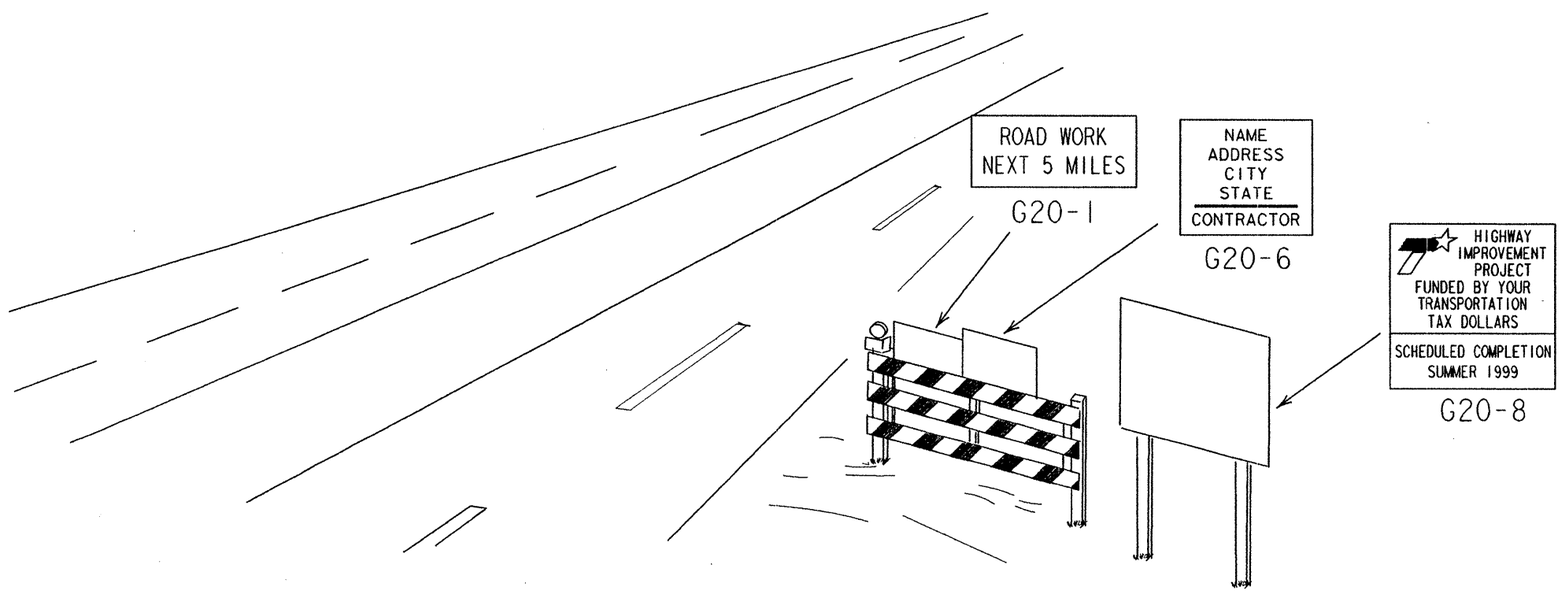

The TxDOT logo is a registered trademark of the Texas Department of Transportation.

SIGN AND SUPPORTS SHALL BE CONSIDERED SUBSIDIARY TO ITEM 502, "BARRICADES, SIGNS AND TRAFFIC HANDLING."

All dimensions are in millimeters unless otherwise noted.

STANDARD PLANS
TEXAS DEPARTMENT OF TRANSPORTATION
Traffic Operations Division

SPECIAL PUBLIC INFORMATION SIGN

WZ(SPIS)-96(M)

ORIG DRAW DATE: May 1996	DN: MT	CK: -	DN: DN	CK: -	NEG NO.:
REVISIONS	STATE DISTRICT: 15	FEDERAL REGION: 6	FEDERAL AID PROJECT: CD2452-1-35		SHEET: 28a
	COUNTY: Bexar		CONTROL	SECTION	JOB	HIGHWAY: 1P1604

CO#1

DISCLAIMER
The use of this standard is governed by the "Texas Engineering Practice Act". No warranty of any kind is made by TxDOT for any purpose whatsoever. TxDOT assumes no responsibility for the conversion of this standard to other formats or for incorrect results or damages resulting from its use.

LEVELS DISPLAYED
DATE:
ACC: d58hp
FILE:
DN: LR
CK: CW
DW: DN
CK: MT

DISCLAIMER
The use of this standard is governed by the "Texas Engi , Practice Act". No warranty of any kind is made by TxDOT for any purpose whatsoever. TxDOT assumes no responsibility for the conversion of this standard to other formats or for incorrect results or damages resulting from its use.

Two Lane, two-way roadway

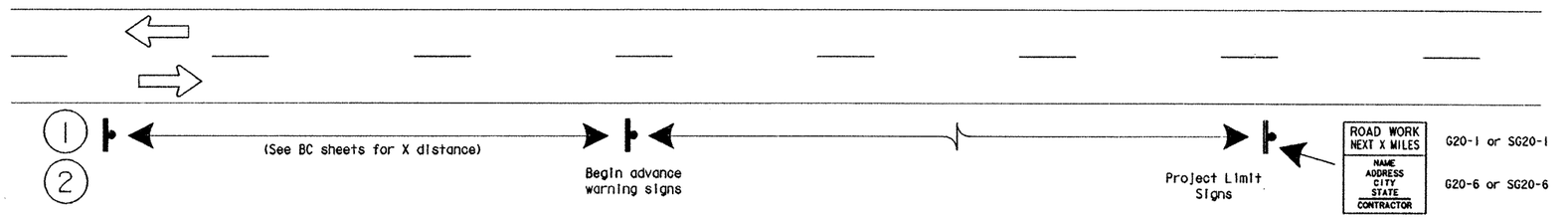

Divided roadways

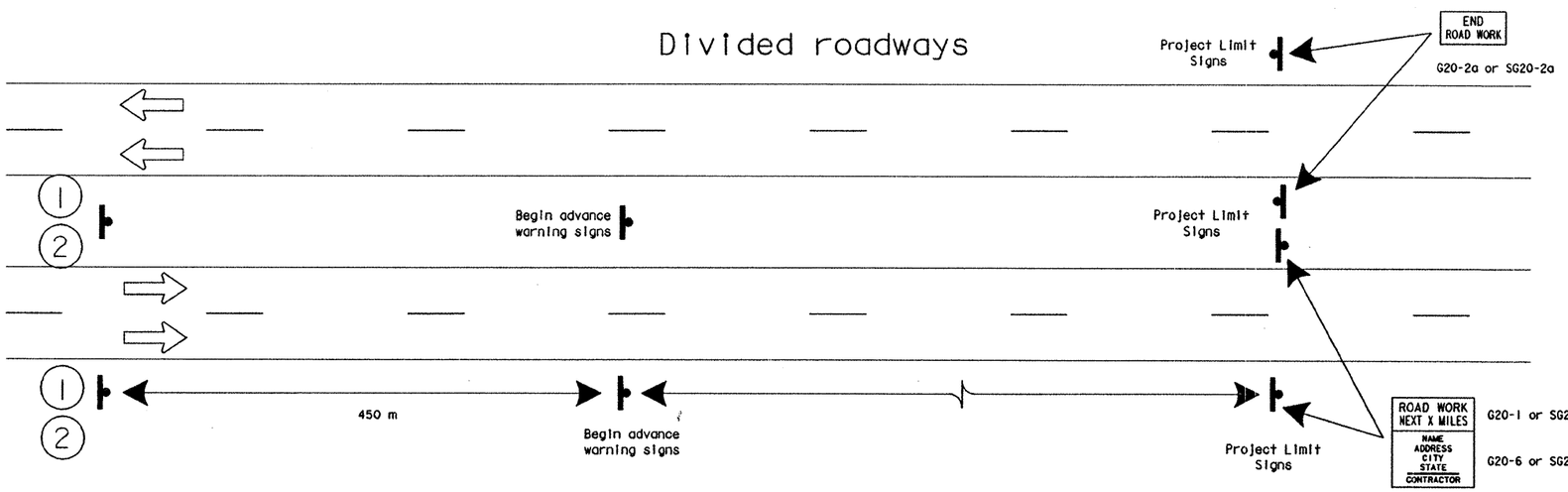

1. OBSERVE WARNING SIGNS - STATE LAW is removed.
2. TRAFFIC FINES DOUBLE sign is installed at previous position of 1.

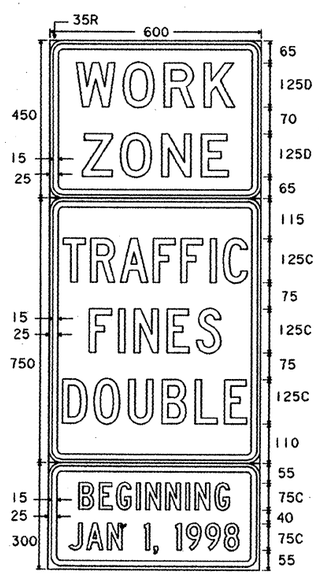

G20-9
LEGEND - BLACK (NON-REFL)
BACKGROUND - ORANGE (REFL)

R20-5
LEGEND - BLACK (NON-REFL)
BACKGROUND - WHITE (REFL)

R20-5 Plaque
LEGEND - BLACK (NON-REFL)
BACKGROUND - ORANGE (REFL)

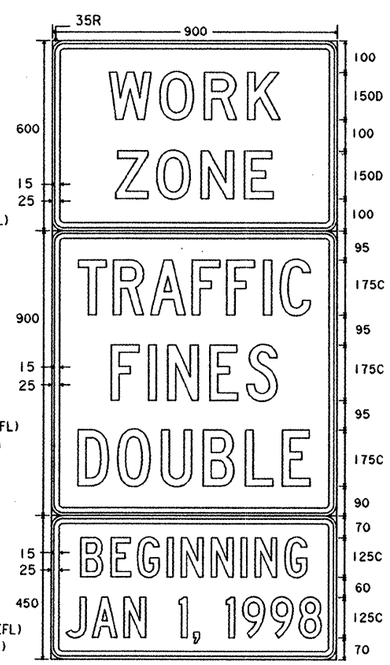

EG20-9
LEGEND - BLACK (NON-REFL)
BACKGROUND - ORANGE (REFL)

ER20-5
LEGEND - BLACK (NON-REFL)
BACKGROUND - WHITE (REFL)

ER20-5 Plaque
LEGEND - BLACK (NON-REFL)
BACKGROUND - ORANGE (REFL)

GENERAL NOTES:

AUTHORITY

HB 981, passed by the 75th Texas Legislature and signed by Governor George W. Bush in June, 1997, allows judicial authorities to double the fines for traffic violations in work zones. The legislation becomes effective January 1, 1998, and applies to all work zones along all state, county and city public roadways.

DISPLAY

The Traffic Fines Double Sign Assembly (TFDSA) shall consist of the WORK ZONE (G20-9) sign, TRAFFIC FINES DOUBLE (R20-5) sign, BEGINNING JAN. 1, 1998 plaque and supports. Orange warning flags may be attached at the top of the TFDSA as required by the Engineer.

After April 1, 1998, the BEGINNING JAN. 1, 1998 plaque should be removed and discarded; however, the WORK ZONE and TRAFFIC FINES DOUBLE signs shall remain for the duration of the project.

FABRICATION AND ERECTION

The TFDSA shall be fabricated and erected in accordance with Department and BC-97 Standards.

PLACEMENT

The TFDSA shall be placed as an integral part of the advance warning signs along major roadway approaches. Typical placement locations are illustrated. The preferred method is to remove and replace the OBSERVE WARNING SIGN-STATE LAW sign with the TFDSA. The Engineer may use alternate locations as necessary.

MEASUREMENT AND PAYMENT

Existing projects shall issue a Change Order to include TFDSA within the project. Removal of the OBSERVE WARNING SIGN-STATE LAW sign shall not be paid for directly, but shall be considered subsidiary to ITEM 502, "Barricades, Signs and Traffic Handling."

For purposes of measurement and payment, the WORK ZONE (G20-9) sign, TRAFFIC FINES DOUBLE (R20-5) sign, BEGINNING JAN. 1, 1998 plaque and supports shall be considered as components of the TFDSA. The TFDSA shall be measured and paid for by the each as small (SM) or large (LG) under ITEM 644, "Small Roadside Sign Assemblies" with the following bid codes:

0644 5036 SMALL RDSD SGN ASSM (TY SPL)(DBL FN) SM	EA
0644 5037 SMALL RDSD SGN ASSM (TY SPL)(DBL FN) LG	EA

EXPIRATION DATE

When the BC-98 Standards become effective (exact date to be announced), the TFDSA will become part of the BC-98 Standards and then be considered subsidiary to ITEM 502, "Barricades, Signs and Traffic Handling." WZ (TFDS)-97 Standard will no longer be needed nor included in projects awarded after the effective date of the BC-98 Standards.

The metric dimensions shown on this sheet have been rounded, and should be considered equivalent to the English dimensions in the "1980 Standard Highway Sign Designs for Texas" manual. All dimensions are in millimeters unless otherwise noted.

STANDARD PLANS
TEXAS DEPARTMENT OF TRANSPORTATION
Traffic Operations Division

TRAFFIC FINES DOUBLE SIGNS

WZ(TFDS)-97(M)

ORIG DRAW DATE: June 1997	DW: MT	CK:	DW: DN	CK: MT	MSG NO.:
REVISIONS	STATE DISTRICT	FEDERAL REGION	FEDERAL AID PROJECT		SHEET
	15	6	CD1452-1-35		28
	COUNTY			CONTROL / SECTION / JOB	HIGHWAY
	Bexar				CP1204

CO#1

LEVELS DISPLAYED
1 2 3 4 5 6 7 8 9 10 11 12 13 14 15 16
17 18 19 20 21 22 23 24 25 26 27 28 29 30 31 32
33 34 35 36 37 38 39 40 41 42 43 44 45 46 47 48
49 50 51 52 53 54 55 56 57 58 59 60 61 62 63

DATE:
ACC:
FILE:

DN:
CK:
DW:
CK:

DISCLAIMER
The use of this standard is governed by the "Texas Engineering Practice Act". No warranty of any kind is made by TxDOT for any purpose whatsoever. TxDOT assumes no responsibility for the conversion of this standard to other formats or for incorrect results or damages resulting from its use.

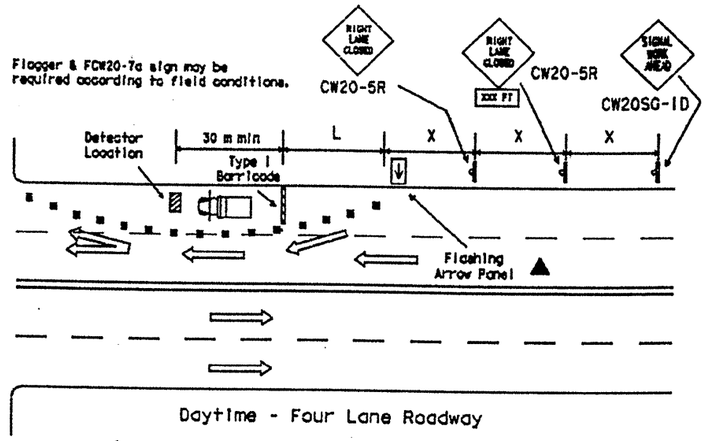

Daytime - Four Lane Roadway

Posted Speed	Formula	Minimum Desirable Taper Lengths ** 3.0 m Offset (meters)	3.3 m Offset (meters)	3.6 m Offset (meters)	Suggested Maximum Spacing of Devices On a Taper (meters)	On a Tangent (meters)	Minimum Sign Spacing X Distance (meters)
30	$L=\frac{WS^2}{60}$	45	50	55	9	15-20	40
35		65	70	75	10	20-25	50
40		80	90	100	12	25-30	75
45	L=WS	135	150	165	13	25-30	100
50		150	165	180	15	30-35	120
55		165	185	200	16	35-40	* 150
60		180	200	220	18	40-45	* 180
65		195	215	235	19	40-50	* 210
70		210	235	255	20	40-50	* 240

* Conventional Roads Only

** Taper lengths have been rounded off.
L=Length of Taper (m) W=Width of Offset (m) S=Posted Speed (MPH)

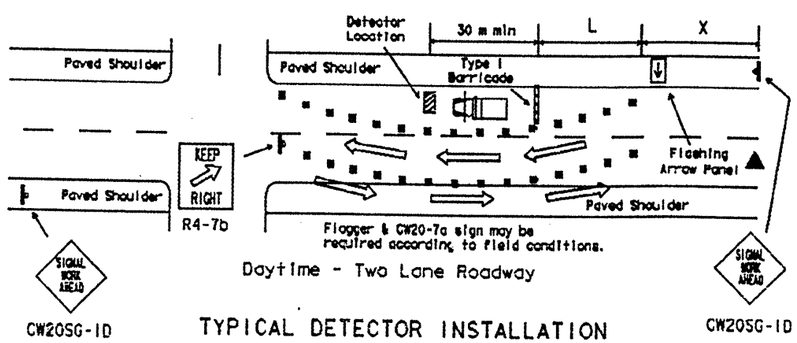

Daytime - Two Lane Roadway

TYPICAL DETECTOR INSTALLATION

Nighttime - 1. Channelizing Devices shall be reflectorized.
2. Barricades shall have Flashing Warning Lights.

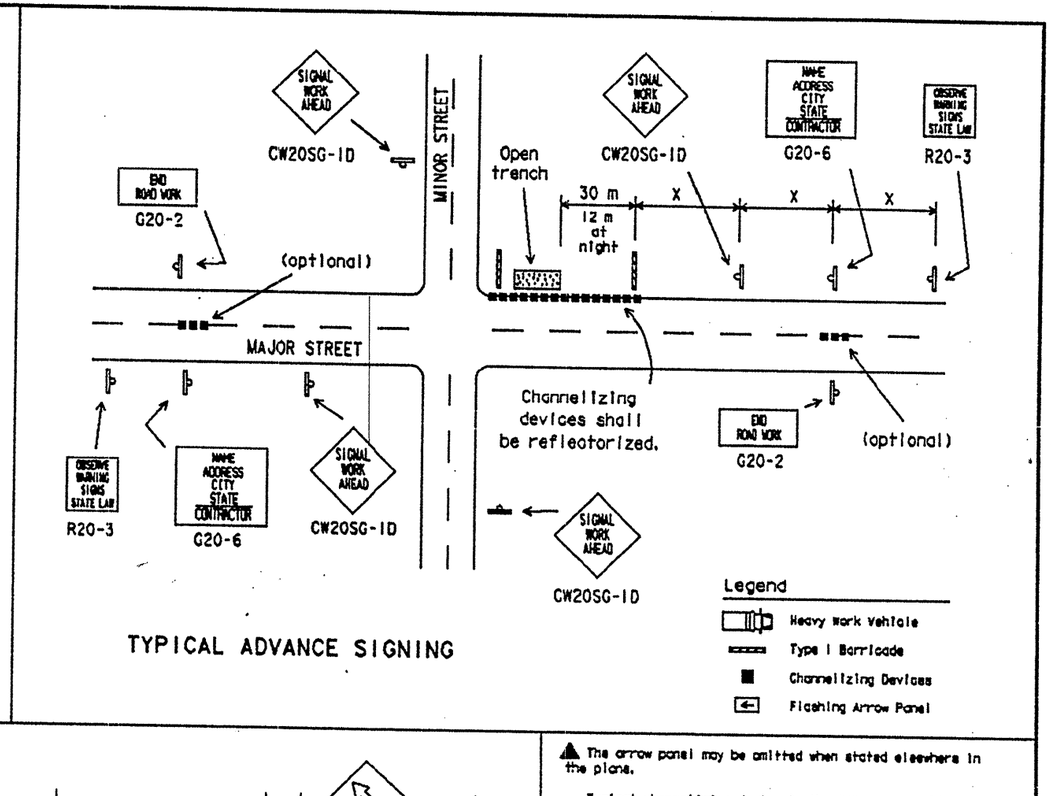

TYPICAL ADVANCE SIGNING

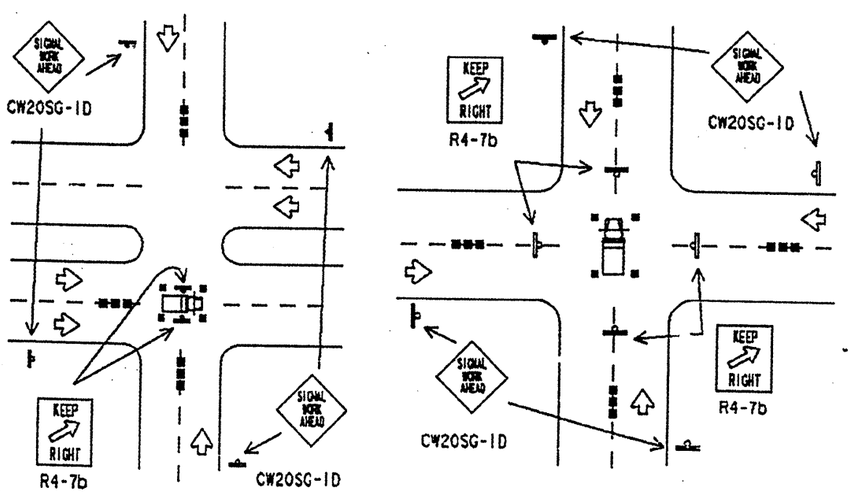

TYPICAL HANGING SIGNAL INSTALLATIONS

Advance warning channelizing devices are optional.

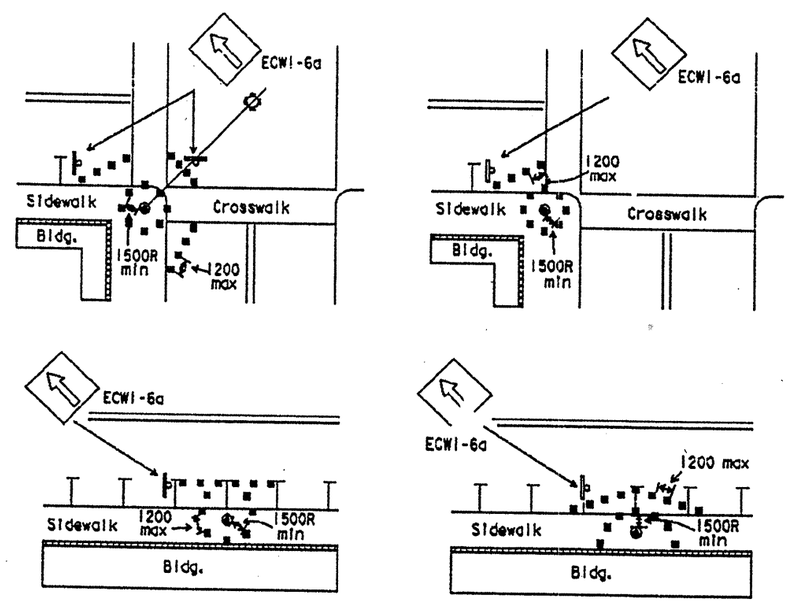

Channelizing devices should not be placed closer than 1500 mm radius (minimum) to signal poles.
Parking may be eliminated by placing channelizing devices in spaces.
If pedestrian walkways are blocked, refer to TMUTCD.

TYPICAL RESTRICTED PEDESTRIAN MOVEMENTS

The arrow panel may be omitted when stated elsewhere in the plans.

Typical channelizing device is the 700 mm cone. Plastic drums may be used if approved by the Engineer. Metal drums shall NOT be used as a channelizing device or sign support.

For several closely adjoining projects, advance signing may not be required in advance of each intersection, but only in advance of the intersections at the project limits. See details elsewhere in the plans for advance signing requirements.

Advance signs and barricades shall be in place when signal construction operations are in progress. The contractor may remove advance signs and barricades when no construction operations are underway if permitted elsewhere in the plans. Obstructions or hazards at the work area shall be clearly marked and delineated at all times.

All holes, trenches or other hazardous areas shall be adequately protected by barricades, lights or other protective devices. Trenches shall be covered or surrounded with orange plastic construction fence as directed by the Engineer.

Flagger and FCW20-7a sign may be required according to field conditions. Vehicles parked in roadway shall be equipped with two strobes. High level flags at corners of vehicle may also be used. Work operations that require work vehicle in traveled way 20 minutes or less may use cones, high level flags and strobes as advance warning devices. Cones should only be placed around vehicle. Flaggers may be used on high speed rural intersections.

All dimensions are in millimeters unless otherwise noted.

STANDARD PLANS
TEXAS DEPARTMENT OF TRANSPORTATION
Traffic Operations Division

TRAFFIC SIGNAL INSTALLATION TYPICAL DETAILS

SHEET 1 OF 2 WZ(BTS-1)-97(M)

DATE	FILE	DN: LR	CK: CW	DW: DN	CK: MT

LEVELS DIS	1	2	3	4	5	6	7	8	9
	10	11	12	13	14	15	16	17	18
	19	20	21	22	23	24	25	26	27
	28	29	30	31	32	33	34	35	36
	37	38	39	40	41	42	43	44	45
	46	47	48	49	50	51	52	53	54
	55	56	57	58	59	60	61	62	63
	64	65	66	67	68	69	70	71	72

DATE SHOWN DATED	April 1992	DN: LR	CK: MT	DW: DN	CK: MT	HES NO.
REVISIONS 2-94 1-97	DISTRICT 15	COUNTY 6	FEDERAL AID PROJECT CH 2162-1-35			SHEET 222
	COUNTY		CONTROL	SECTION	JOB	HIGHWAY

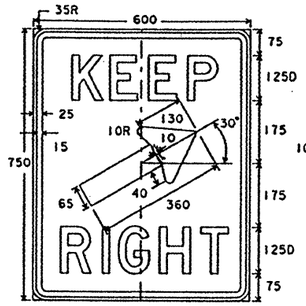

R4-7b
600x750

Letters - Black
Symbol - Black
Border - Black
Background - White Refl.

R20-3
1200x1050

Letters - Black
Border - Black
Background - White Refl.

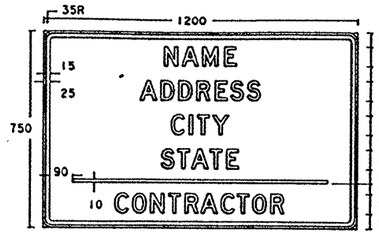

G20-6
1200x750

Letters - Black
Border - Black
Background - Orange or White Refl.

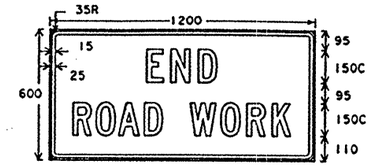

G20-2a
1200x600

Letters - Black
Border - Black
Background - Orange Refl.

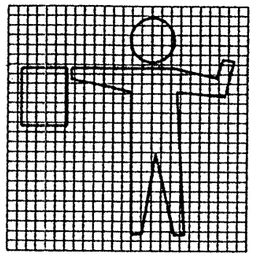

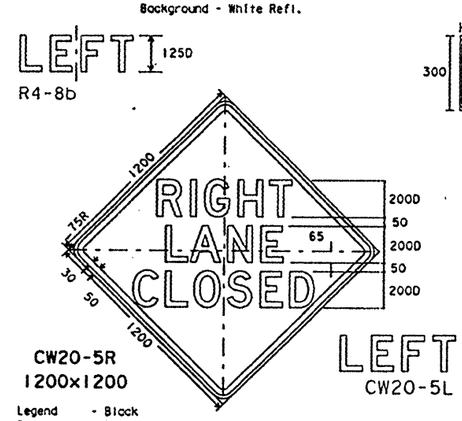

CW20-5R
1200x1200

Legend - Black
Border - Black
Background - Orange Refl.

LEFT 1250
R4-8b

LEFT 2000
CW20-5L

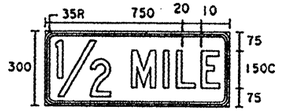

Distance Plaque
750x300

Alternate legends

1 MILE 150C
1500 FT 150C
1000 FT 150C
500 FT 150C

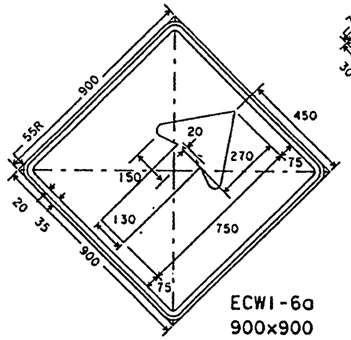

ECW1-6a
900x900

Legend - Black
Border - Black
Background - Orange Refl.

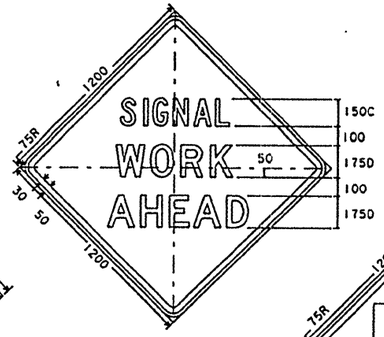

CW20SG-1D
1200x1200

Letters - Black
Border - Black
Background - Orange Refl.

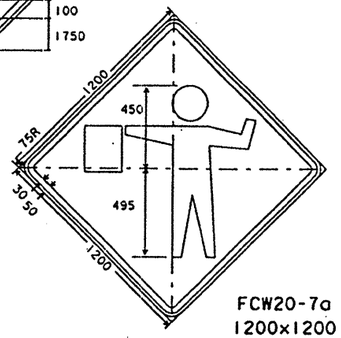

FCW20-7a
1200x1200

Legend - Black
Border - Black
Background - Orange Refl.

TYPICAL SIGNS USED IN TRAFFIC SIGNAL CONSTRUCTION AREAS

TYPE I BARRICADES

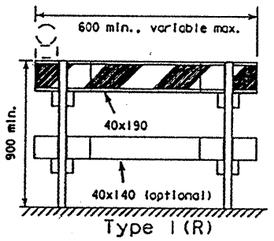

Type I (R)

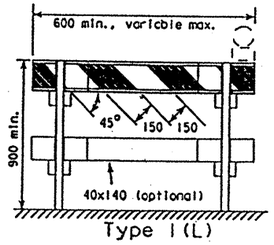

Type I (L)

For Type I and II Barricades, both sides of the rails shall have reflective orange and reflective white striping.

TYPICAL SIGN SUPPORTS

FIXED SUPPORTS

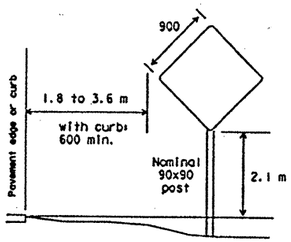

WOOD POST SIGN SUPPORT: for 900 x 900 and smaller warning signs, and other signs having an area not exceeding 0.9 sq.m.

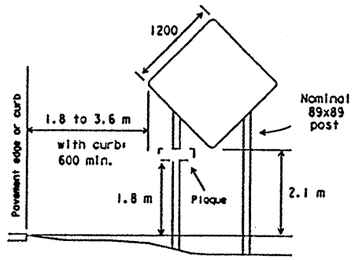

WOOD POST SIGN SUPPORT: for 1200 x 1200 warning sign.

Signs erected on fixed supports shall be at a minimum height of 2.1 meters.

Embedment depth for wood sign supports and post type barricades should be 0.9 meter minimum, unless specified elsewhere in the plans.

Driveable sign supports may be used and shall be installed in accordance with the manufacturers recommendations.

PORTABLE SUPPORTS

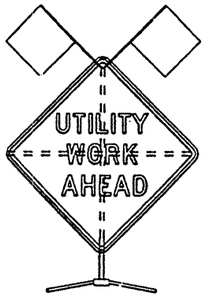

SPECIFICATION REFERENCE TABLE

MATERIALS AND TESTS DIVISION SPECIFICATIONS	
PLYWOOD SIGN BLANKS	D-9-7100
ALUMINUM SIGN BLANKS	D-9-7110
FLAT SURFACE REFLECTIVE SHEETING, TYPE A (ENGINEER GRADE)	D-9-8300
FLAT SURFACE REFLECTIVE SHEETING, TYPE B (SUPER ENGINEER GRADE)	D-9-8300
FLAT SURFACE REFLECTIVE SHEETING, TYPE C (HIGH SPECIFIC INTENSITY)	D-9-8300

GENERAL

Standard signs shall be used as required by the BC Standard sheets, the plans, or as directed by the Engineer to regulate, warn, and guide traffic. All sign usage and erection shall be in strict accordance with the "Texas Manual on Uniform Traffic Control Devices for Streets and Highways" (TMUTCD). The Contractor shall maintain each sign as directed by the Engineer.

The Contractor may use either the sign designs shown on the BC Standard Sheets, or those sign designs shown in the "Standard Highway Sign Designs for Texas " (SHSD). All work zone signs provided for in the TMUTCD but not detailed in the plans may be used when directed by the Engineer.

WARNING LIGHTS

When required by the Engineer the Contractor shall furnish a copy of the warning light certification. Ten certification will be by the manufacturer, stating the lights meet the requirements of the latest ITE Purchase Specification for Flashing and Steady-Burn Warning Lights.

REFLECTIVE SHEETING

Reflectorized signs shall be constructed of retroreflective sheeting meeting the color and reflectivity requirements of Material Specification, D-9-8300 or D-9-8310. Day only is defined as a device that is used only during daylight hours.

Type A, B or C sheeting may be used for all, day only, applications. Type A sheeting should be used for all, white background, regulatory signs. Type C sheeting shall be used for all other applications.

The above applications of sheeting grades to different type signs will apply unless otherwise specified in the plans.

TYPE A = Engineer Grade
TYPE B = Super Engineer Grade
TYPE C = High Specific Intensity

SUPPORTS AND MOUNTING HEIGHT

Regardless of the type of support used, or duration of work, regulatory signs should not be erected at heights less than 2.1 m above the pavement surface.

Wood sign post supports shall be painted white.

Signs may be erected on portable or fixed supports for use on construction projects to warn or guide traffic through and/or around the actual construction area.

PORTABLE - Signs erected on portable supports for use on construction projects normally mean signs which are used during the daytime to warn or guide traffic through and/or around the actual construction area, but at the end of the workday such signs are removed.

Portable supports shall be as shown on this sheet. Signs with portable supports may be used for short term, short duration and mobile operations.

The bottom of the sign shall be a minimum of 300 mm above the pavement surface.

FIXED - Signs erected on fixed supports for use on construction projects normally mean signs that are to remain in place for both daytime and nighttime usage to regulate, warn and guide traffic in advance of and within the limits of the project including the crossroad approaches. Signs erected on fixed supports should be at a minimum height of 2.1 meters.

SIGN SUPPORT WEIGHTS

Where sign supports require the use of weights to keep from turning over, the use of some type of sandbag is recommended. The use of pieces of rock, concrete, iron, steel or other solid objects will not be permitted. Sandbags shall only be placed along or upon the base supports of the device and shall not be suspended above ground level or hung with rope, wire, chains or other fasteners.

REMOVING OR COVERING

When sign messages may be confusing or no longer apply, the signs and supports shall be removed from roadway and shoulder, or the signs shall be completely covered. Turning signs from motorists view will not be allowed. When signs are covered the material used shall be opaque, such as heavy mil black plastic. Burlap shall not be used to cover signs. Signs shall be removed upon completion of the work.

Duct tape or other adhesive material shall not be affixed to sign face.

All dimensions are in millimeters unless otherwise noted.

STANDARD PLANS
TEXAS DEPARTMENT OF TRANSPORTATION
Traffic Operations Division

TRAFFIC SIGNAL INSTALLATION BARRICADES AND SIGNS

SHEET 2 OF 2 WZ(BTS-2)-97(M)

ORIG. DRAW DATE: April 1992	DN: LR	CK: MT	DW: DN	CK:	REV. NO.:
REVISIONS 2-94 1-97	STATE DISTRICT 15	FEDERAL REG. CN 6	FEDERAL AID PROJECT CD 2452-1-35		SHEET 283
	COUNTY BEXAR		CONTROL 2452	SECTION 01	JOB 026 HIGHWAY LP

DISCLAIMER
The use of this standard is governed by the "Texas Engineering Practice Act". No warranty of any kind is made by TxDOT for any purpose whatsoever. TxDOT assumes no responsibility for the conversion of this standard to other formats or for incorrect results or damages resulting from its use.

CK: CW
DW: DN
CK: MT

FILE:

SPECIAL NOTICE TO TxDOT PROJECT ENGINEERS & CONTRACTORS:

TxDOT WILL IMPLEMENT SIGNIFICANT CHANGES TO WORK ZONE DEVICES BEGINNING WITH CONTRACTS AWARDED IN 1998. (exact date to be announced.)

SIGNS

1) Until BC-98 is issued and becomes effective, it is the contractor's option to substitute previous sign designs for the signs listed below.

TMUTCD Part VI (January 1996 edition)		Previous Sign Designation & Design	
W3-1a	STOP AHEAD symbol (yellow bkgd)	CW3-1a	STOP AHEAD symbol (orange bkgd)
W3-2a	YIELD AHEAD symbol (yellow bkgd)	CW3-2a	YIELD AHEAD symbol (orange bkgd)
W3-3	SIGNAL AHEAD symbol (yellow bkgd)	CW3-3	SIGNAL AHEAD symbol (orange bkgd)
CW8-9a	SHOULDER DROP OFF	CW21-13	SHOULDER DROP OFF (symbol & word message plaque)
CW8-11	UNEVEN LANES	CW21-14	UNEVEN LANES (symbol & word message plaque)
CW20SG-1D	SIGNAL WORK AHEAD	CW21SG-1D	SIGNAL CONSTRUCTION AHEAD*
CW20-5	RIGHT (or LEFT) TWO LANES CLOSED with distance plague	CW20-5	RIGHT (or LEFT) LANE CLOSED* with distances within sign border
		and/or CW4-2	RIGHT (or LEFT) LANE CLOSED symbol**
CW20-5a	RIGHT (or LEFT) TWO LANES CLOSED	CW23-7	TWO RIGHT (or LEFT) LANES CLOSED*
CW20-7b	BE PREPARED TO STOP	CW21-8	BE PREPARED TO STOP
CW21-7D	UTILITY WORK AHEAD	CW20-UT-1D	UTILITY WORK AHEAD
CW22-2a	TURN OFF 2-WAY RADIOS & TELEPHONES	CW22-2a	TURN OFF 2-WAY RADIOS
G20-1	ROAD WORK NEXT 5 MILES	G20-1	ROAD CONSTRUCTION NEXT 5 MILES
SG20-1	ROAD WORK NEXT 5 MILES (1200 x 450 with orange bkgd as detailed on BC(6)-97(M))	G20-1	ROAD CONSTRUCTION NEXT 5 MILES
G20-1a	ROAD WORK ⇦ NEXT 5 MILES NEXT 3 MILES ⇨	G20-1a	ROAD CONSTRUCTION ⇦ NEXT 5 MILES NEXT 3 MILES ⇨
G20-1bL	ROAD WORK ⇦ NEXT 5 MILES	G20-1bL	ROAD CONSTRUCTION ⇦ NEXT 5 MILES
SG20-6	CONTRACTOR NAME & ADDRESS (1200 x 750 with orange bkgd as detailed on BC(6)-97(M))	G20-6	CONTRACTOR NAME & ADDRESS

* - When used in a series, all signs should have consistent text, design and message. EXAMPLE: SIGNAL WORK AHEAD and SIGNAL CONSTRUCTION AHEAD signs should not be used in sequence.

** - CW4-2 LANE CLOSED symbol sign may only be used as the last sign in the lane closure signing sequence.

PROPOSED CHANGES TO: BARRICADES

2) Type II and Type III wood barricade designs will no longer be allowed. New Type II and Type III barricade designs will be fabricated from tubular steel, plastic, and other lightweight materials.
3) Barricades will not be required at the project limits. Signs erected at the project limits will be independently mounted.
4) Type I, II and III Barricades will not be allowed as sign supports.

PROPOSED CHANGES TO: SIGN SUPPORTS

5) Sign supports must be tested and approved as crashworthy.
6) Barricades, tripods and "easels" will not be allowed as sign supports.

To receive a free copy of the proposed BC-98 standards, please write or FAX:

Standards Engineer
Traffic Operations Division-TE
TxDOT
125 East 11th Street
Austin, Texas 78701-2483

FAX (512)416-3161

All dimensions are in millimeters unless otherwise noted.

STANDARD PLANS
TEXAS DEPARTMENT OF TRANSPORTATION
Traffic Operations Division

TRAFFIC SIGNAL INSTALLATION NOTES

WZ(BTS-NOTES)-97(M)

ORIG. GRAD DATE: January 1997	DN: MT	CK:	DW: DN	CK: MT	REG NO.:
REVISIONS	STATE DISTRICT 15	FEDERAL REGION 6	FEDERAL AID PROJECT CD 2452-1-35		SHEET 28A
	COUNTY BEXAR		CONTROL 2452	SECTION 01	JOB

DISCLAIMER
The use of this standard is governed by the "Texas Engineering Practice Act". No warranty of any kind is made by TxDOT for any purpose whatsoever. TxDOT assumes no responsibility for the conversion of this standard to other formats or for incorrect results or damages resulting from its use.

DISCLAIMER
The use of this standard is governed by the "Texas Engineering Practice Act". No warranty of any kind is made by TxDOT for any purpose whatsoever. TxDOT assumes no responsibility for the conversion of this standard to other formats or for incorrect results or damages resulting from its use.

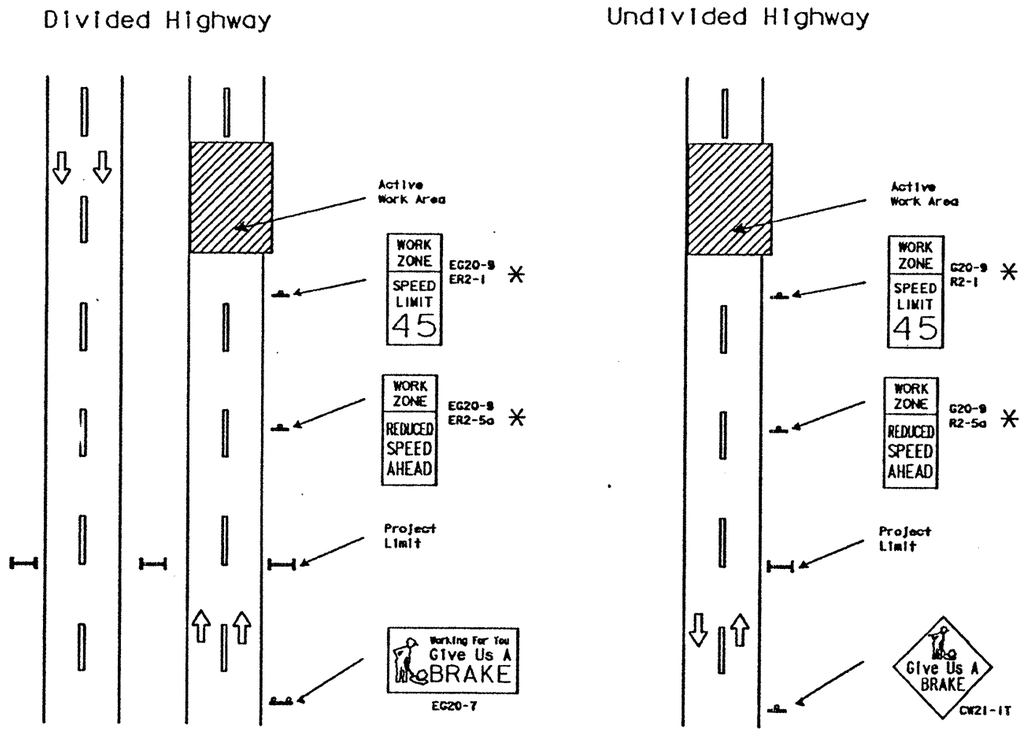

* Posted only when reduced speed is directed by the Engineer

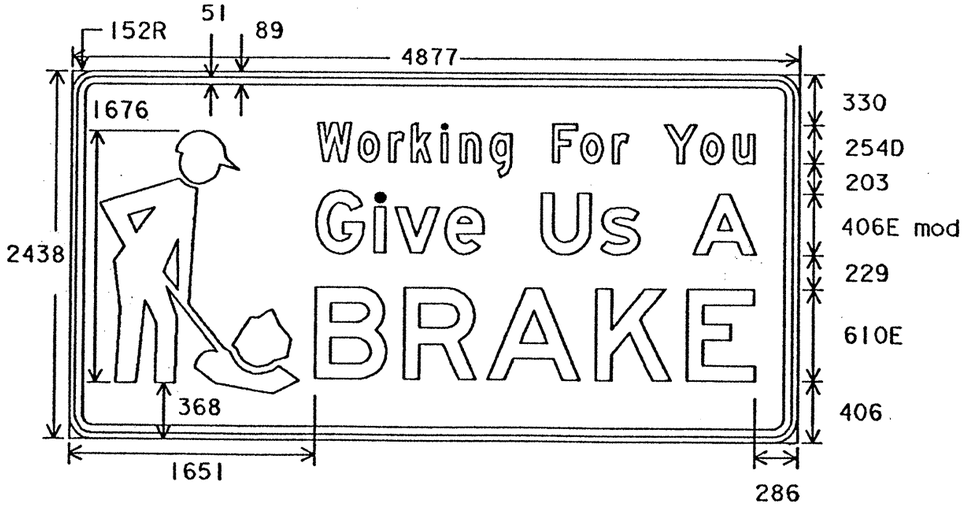

Letters - Black
Symbol - Black
Border - Black
Background - Orange Refl.

EG20-7

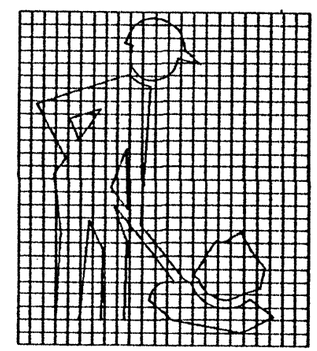

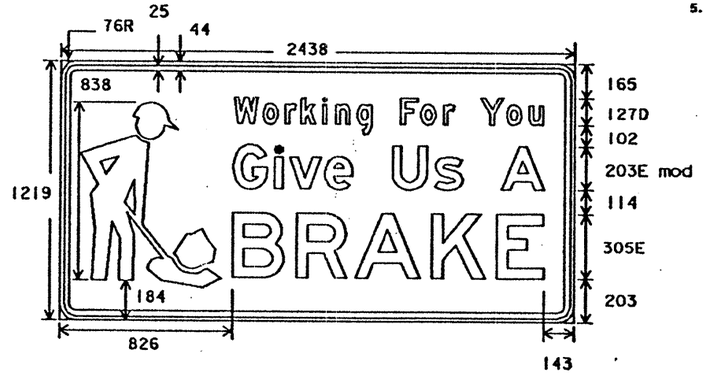

Letters - Black
Symbol - Black
Border - Black
Background - Orange Refl.

G20-7

SUMMARY OF LARGE SIGNS

BACKGROUND COLOR	SIGN DESIGNATION	SIGN TEXT	SIGN DIMENSIONS (METERS)	REFLECTIVE SHEETING	PLY TY A (SQ METERS)	GALVANIZED STRUCT STEEL Size	(Lm) ①	(Lm) ②	DRILLED SHAFT 610 mm (Lm)
Orange	EG20-7	Give Us A BRAKE	4.88 x 2.44	Type C	11.89	W8x18	4.88	5.18	3.65
Orange	G20-7	Give Us A BRAKE	2.44 x 1.22	Type C	2.97	S4x7.7	3.66	3.96	2.13 *

* 305 mm Non-reinforced Concrete Footing (Lm)

SUMMARY OF SMALL SIGNS

BACKGROUND COLOR	SIGN DESIGNATION	SIGN TEXT	SIGN DIMENSIONS	REFLECTIVE SHEETING	PLY TY A (SQ METERS)
Orange	EG20-9	WORK ZONE	914 x 610	Type C	0.56
Orange	G20-9	WORK ZONE	610 x 457	Type C	0.28
White	ER2-1	SPEED LIMIT	914 x 1219	Type A	1.11
White	ER2-5a	REDUCED SPEED AHEAD	914 x 1219	Type A	1.11
Orange	CW21-1T	GIVE US A BRAKE	1219 x 1219	Type C	1.49

SPECIFICATION REFERENCE TABLE
MATERIALS AND TESTS DIVISION SPECIFICATIONS

PLYWOOD SIGN BLANKS	D-9-7100
ALUMINUM SIGN BLANKS	D-9-7110
FLAT SURFACE REFLECTIVE SHEETING, TYPE A (ENGINEER GRADE)	D-9-8300
FLAT SURFACE REFLECTIVE SHEETING, TYPE C (HIGH SPECIFIC INTENSITY)	D-9-8300
VINYL NON-REFLECTIVE DECAL SHEETING	D-9-8320

GENERAL NOTES:

1. See SMD(2-1)(M), (2-2)(M) and (2-3)(M) for additional sign support details.
2. Sign locations shall be approved by the Engineer.
3. For projects more than two miles in length, Give Us A BRAKE and WORK ZONE SPEED LIMIT signs should be repeated halfway through the project. Projects less than two miles generally do not require repeated Give Us A BRAKE signs.
4. Signs are illustrated for one direction of travel.
5. G20-7, EG20-7 and CW21-1T signs detailed on this sheet shall be paid for under the following bid items:

Item 634	Plywood Signs Type A
Item 647	Large Roadside Sign Supports
Item 656	Foundations for Signs, Traffic Signals and Roadway Illumination Assemblies
Item 644	Small Roadside Sign Assemblies

All dimensions are in millimeters unless otherwise noted.

STANDARD PLANS
TEXAS DEPARTMENT OF TRANSPORTATION
Traffic Operations Division

WORK ZONE
"GIVE US A BRAKE"
SIGNS

SHEET 1 OF 2 WZ(BRK-1)-96A(M)

August 1995 | LR | DN

12-95
6-96
9-96

15 | 6 | CD 2452-1-35 | 285

DISCLAIMER
The use of this standard is governed by the "Texas Engineering Practice Act". No warranty of any kind is made by TxDOT for any purpose whatsoever. TxDOT assumes no responsibility for the conversion of this standard to other formats or for incorrect results or damages resulting from its use.

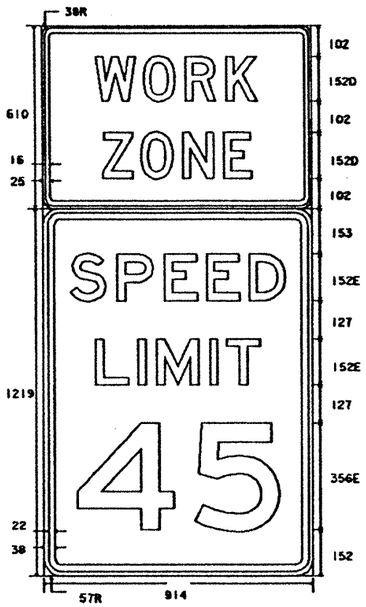

Letters - Black
Background - Orange Refl.

EG20-9

Letters - Black
Background - White Refl.

ER2-1

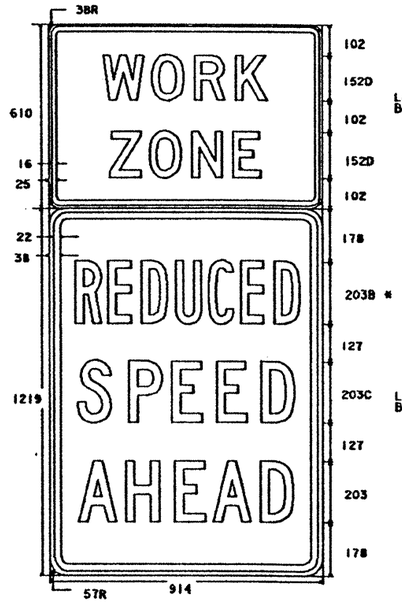

Letters - Black
Background - Orange Refl.

EG20-9

Letters - Black
Background - White Refl.

ER2-5a

* spacing reduced 40%

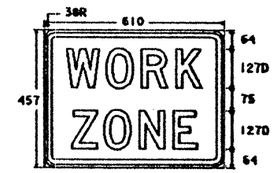

Letters - Black
Background - Orange Refl.

G20-9

SUMMARY OF SMALL SIGNS

BACKGROUND COLOR	SIGN DESIGNATION	SIGN TEXT	SIGN DIMENSIONS	REFLECTIVE SHEETING	PLY TY A (SQ METERS)
Orange	EG20-9	WORK ZONE	914 x 610	Type C	0.56
Orange	G20-9	WORK ZONE	610 x 457	Type C	0.28
White	ER2-1	SPEED LIMIT	914 x 1219	Type A	1.11
White	ER2-5a	REDUCED SPEED AHEAD	914 x 1219	Type A	1.11
Orange	CW21-1T	GIVE US A BRAKE	1219 x 1219	Type C	1.49

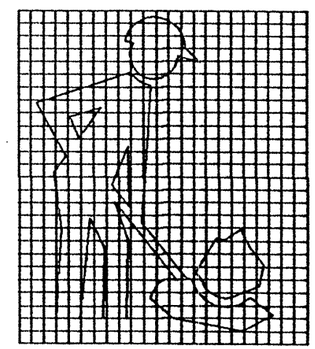

SPECIFICATION REFERENCE TABLE
MATERIALS AND TESTS DIVISION SPECIFICATIONS

PLYWOOD SIGN BLANKS	D-9-7100
FLAT SURFACE REFLECTIVE SHEETING, TYPE A (ENGINEER GRADE)	D-9-8300
FLAT SURFACE REFLECTIVE SHEETING, TYPE C (HIGH SPECIFIC INTENSITY)	D-9-8300
VINYL NON-REFLECTIVE DECAL SHEETING	D-9-8320

GENERAL NOTES:

1. See BC(W) sheets for additional sign support details.
2. The WORK ZONE (EG20-9) sign is to be installed in combination with a SPEED LIMIT (ER2-1) sign or REDUCED SPEED AHEAD (ER2-5a) sign.
3. Signs shall be placed at the minimum advance distances listed below

MINIMUM ADVANCE DISTANCE

SIGNS	DIVIDED HIGHWAY	UNDIVIDED HIGHWAY	FROM
WORK ZONE SPEED LIMIT	335 meters	244 meters	active work area
WORK ZONE REDUCED SPEED AHEAD	488 meters	305 meters	WORK ZONE SPEED LIMIT sign(s)

4. The WORK ZONE REDUCED SPEED AHEAD and WORK ZONE SPEED LIMIT signs should only be visible to motorists when workers are actually present in the work area.
5. Speed limits shall be regulatory and approved by the Texas Transportation Commission.
6. EG20-9, G20-9, ER2-1, R2-1, ER2-5a and R2-5a signs and sign supports shall be considered subsidiary to Item 502, "Barricades, Signs and Traffic Handling."
7. Give Us A BRAKE (1219 x 1219, CW21-1T) signs shall be paid for (each) under Item 644, "Small Roadside Sign Assemblies."

All dimensions are in millimeters unless otherwise noted.

FIXED SUPPORTS REQUIRED FOR ER2-1 AND ER2-5a

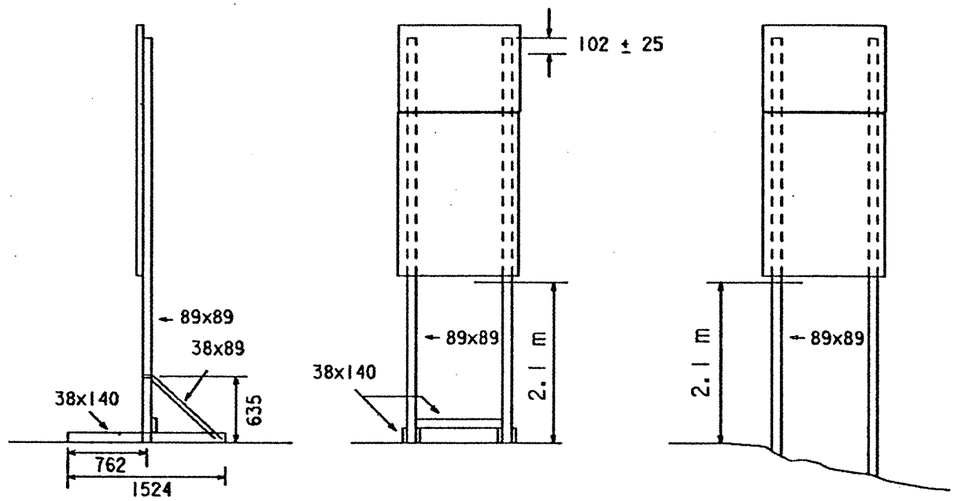

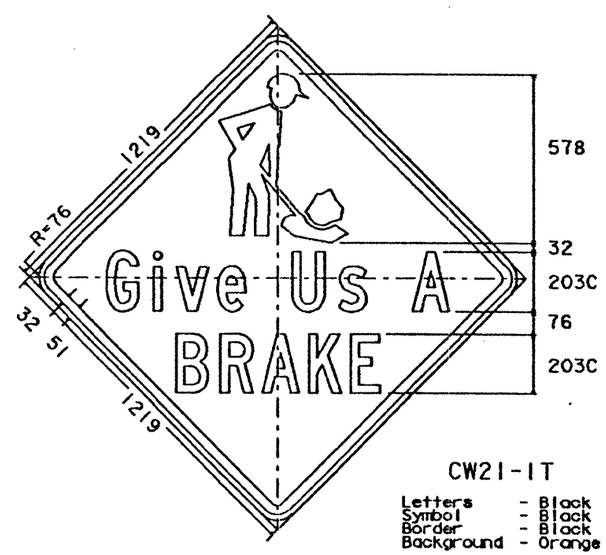

CW21-1T

Letters - Black
Symbol - Black
Border - Black
Background - Orange Refl.

STANDARD PLANS
TEXAS DEPARTMENT OF TRANSPORTATION
Traffic Operations Division

WORK ZONE
"GIVE US A BRAKE"
SIGNS

SHEET 2 OF 2 WZ(BRK-2)-96A(M)

August 1995 | LR | DN

12-95
6-96
9-96

15 | 6 | CB2452-135 | 286

OBJECT MARKER TYPES 1 and 4

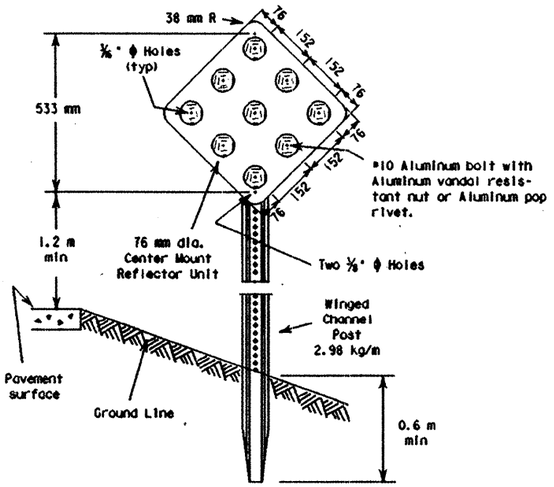

TYPE 1 and 4 Object Markers shall consist of Type (B) Center Mount Reflector Units mounted on 2 mm thick sheet aluminum conforming with ASTM B-209 Alloy 6061-T6.

TYPE 1 OM-1R

457x457
Reflector Unit - YELLOW
Background - (YELLOW - Non-Reflective)

TYPE 4 OM-4R

457x457
Reflector Unit - RED
Background - (RED - Non-Reflective)

OBJECT MARKER TYPE 3

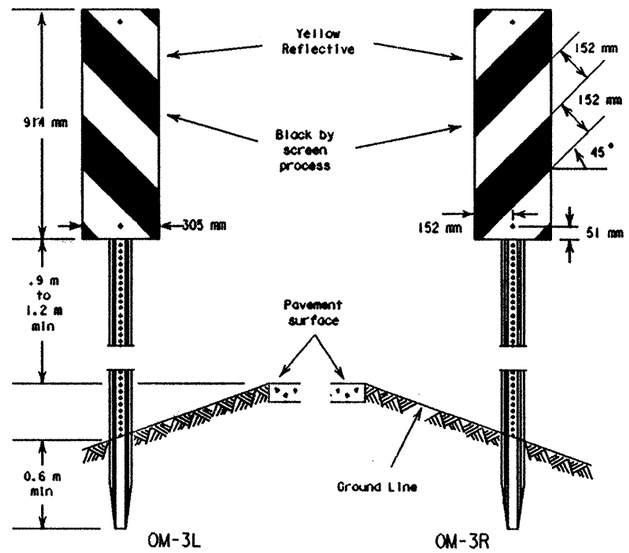

Sign blank to be 2 mm thick sheet aluminum conforming to ASTM B-209 Alloy 6061-T6.

Reflective sheeting shall be in accordance with Departmental Material Specification, D-9-8300, Type C.

TYPICAL REFLECTOR UNITS

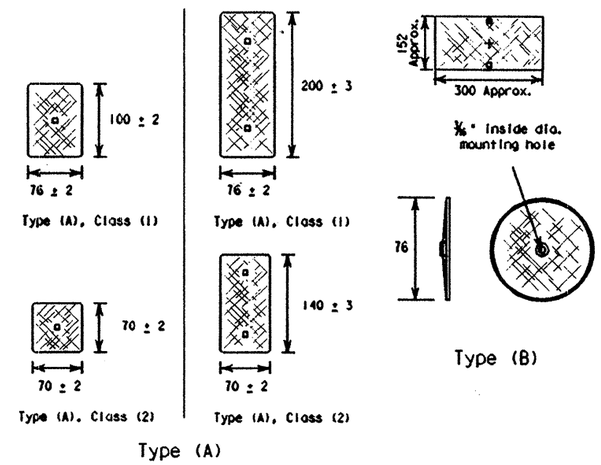

Type (A)

Type (A) - Reflective sheeting with pressure sensitive backing. For certain (non-flexible post) applications, reflective sheeting may be directly applied to approved metal, plastic or fiberglass backplate with 17/64" square mounting hole.

It is the contractor's option to provide Class (1) or Class (2) reflective sheeting in accordance with Departmental Material Specification D-9-8600. All reflector units per delineator or object marker shall be of the same type and class of reflective sheeting.

Type (B) - Centermount acrylic plastic prismatic reflector.

SPECIFICATION REFERENCE TABLE

MATERIALS AND TESTS DIVISION SPECIFICATIONS	
FLEXIBLE DELINEATOR & OBJECT MARKER POSTS (DRIVEABLE & SURFACE MOUNT TYPES)	D-9-4400
FLAT SURFACE REFLECTIVE SHEETING, TYPE C (HIGH SPECIFIC INTENSITY)	D-9-8300
NON-REFLECTIVE BACKGROUND COATING	D-9-8500
DELINEATOR AND OBJECT MARKER	D-9-8600

GENERAL NOTES:

1) Delineators shall be uniformily placed not less than 0.6 m nor more than 2.4 m from the edge of shoulder or the face of unmountable curb. They may be placed in line with guardrail where guardrail is used.
2) Object markers shall be located at points designated on the plan.
   When used for marking objects in the roadway or 2.4 m or less from the shoulder or curb, the mounting height to the bottom of the object marker should normally be 1.2 m above the surface of the nearest traffic lane. When used to mark objects more than 2.4 m from the shoulder or curb, the mounting height to the bottom of the object marker may be 1.2 m above the ground line.
   When object markers or markings are applied to a hazardous object which by its nature required a lower or higher mounting, the vertical mounting height may vary according to need.
3) Hardware shall be galvanized steel, stainless steel, or aluminum, except as noted.
4) Posts for supporting delineators and Type 2 object markers shall be 1.67 kg/m winged channel.
5) Type 1, 3 and 4 object marker posts shall be 2.98 kg/m winged channel.
6) Delineator and object markers shall be in accordance with Department Material Specification D-9-8600.

All dimensions are in millimeters unless otherwise noted.

OBJECT MARKERS TYPE 2

YELLOW (R-reflector unit, P-panel)

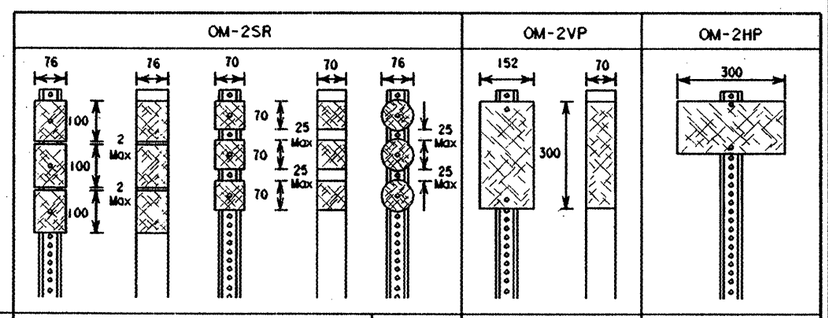

Type	A				B	A		A
Class	1	1	2	2	n/a	1	2	1
Post	WC	FLEX	WC	FLEX	WC	WC	FLEX	WC

ALL REFLECTOR UNITS ARE YELLOW
WC-wing channel post (1.67 kg/m)
FLEX-flexible post (driveable and semi-driveable)

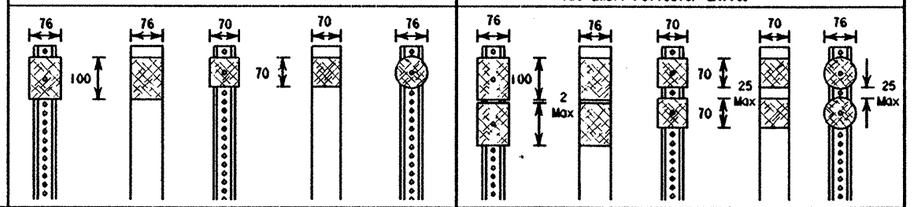

Type	A				B	A				B
Class	1	1	2	2	n/a	1	1	2	2	n/a
Post	WC	FLEX	WC	FLEX	WC	WC	FLEX	WC	FLEX	WC

Length of post may vary to meet field conditions.

REFLECTOR UNITS: W-white, Y-yellow, R-red
WC-wing channel post (1.67 kg/m)
FLEX-flexible post (driveable and semi-driveable)

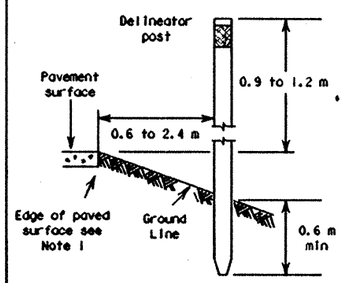

TYPICAL INSTALLATION

STANDARD PLANS
TEXAS DEPARTMENT OF TRANSPORTATION
Traffic Operations Division

DELINEATORS & OBJECT MARKERS SAN ANTONIO STANDARD

(1 of 2) D & OM(1)-95(M)

ORIG CAUS DATE: JAN. 1981	DN-LR	CK-	DW-DN	CK-	REQ NO.
REVISIONS: 1-32, 4-32, 8-95	STATE DISTRICT: SAT	FEDERAL REGION: 6	FEDERAL AID PROJECT: CD 2457-01-35		SHEET: 287
	COUNTY: BEXAR	CONTROL: 2457	SECTION: 01	JOB: 056	HIGHWAY: LP 1604

REV. 3-97

Metric 20A

DISCLAIMER
The use of this standard is governed by the "Texas Engineering Practice Act". No warranty of any kind is made by TxDOT for any purpose whatsoever. TxDOT assumes no responsibility for the conversion of this standard to other formats or for incorrect results or damages resulting from its use.

LEVELS DISPLAYED
DATE:
ACC: d58mpio/usr/d580504
FILE:
DN: LR CK: CW DW: DN CK: MT

DISCLAIMER
The use of this standard is governed by the "Texas Engineering Practice Act". No warranty of any kind is made by TxDOT for any purpose whatsoever. TxDOT assumes no responsibility for the conversion of this standard to other formats or for incorrect results or damages resulting from its use.

PLAN VIEW OF BIDIRECTIONAL MOUNTING

For Single Delineators Only

Post oriented as directed by Engineer

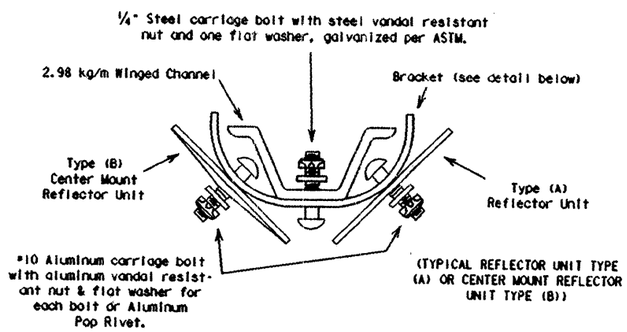

BIDIRECTIONAL BRACKET

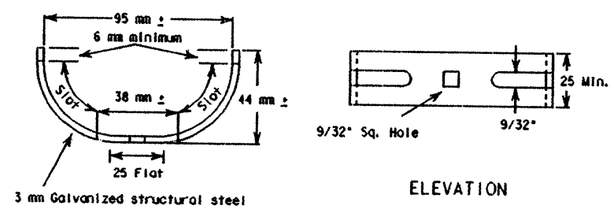

PLAN VIEW

ELEVATION

Strap Length = 152 mm Min.

DELINEATORS FOR CURVES OR TANGENT SECTIONS

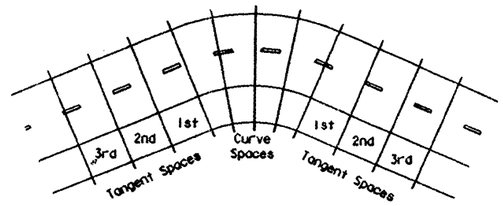

The delineator spacing, S, on the curve is found from the formula $S=1.64\sqrt{R-5}$, where R is the radius of the curve in meters. The first spaces immediately in advance of and beyond the curve are 2.0xS, the second spaces are 3.0xS, and the third spaces are 6.0xS but not to exceed 90 m. Distance for spaces rounded to nearest 1.0 m.

Spacing for Highway Delineators on Horizontal Curve

Degree of Curve	Radius on Curve	Spacing on Curve	Spacing in Advance of and Beyond Curves		
			First Space	Second Space	Third Space
	Meters	Meters	Meters	Meters	Meters
1	1746	68	90	90	90
2	873	48			
3	582	39	79		
4	437	34	68		
5	349	30	61		
6	291	28	56	84	
7	249	26	52	78	
8	218	24	48	72	
9	194	23	46	69	
10	174	21	42	63	
11	159	20	40	60	
12	145	19	38	57	

FLEXIBLE POSTS

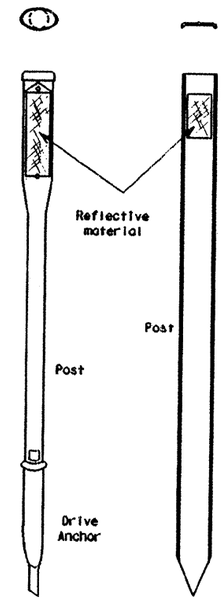

Driveable or Semi-Driveable Delineator Posts

Install to manufacturer's recommendations

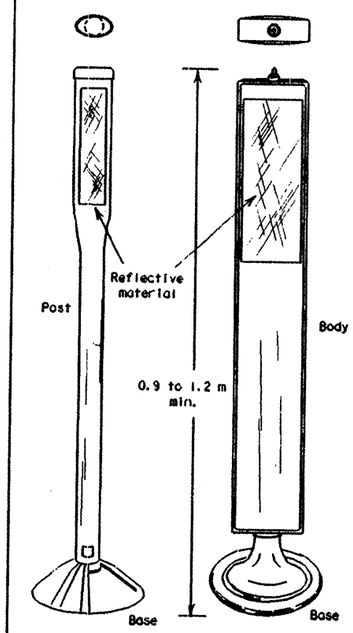

Pavement Surface Mount

Surface mounted delineator posts may use epoxy, or hot bituminous adhesive to mount post to flat surface.

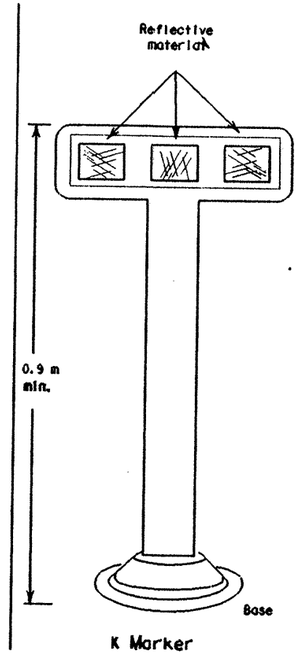

K Marker

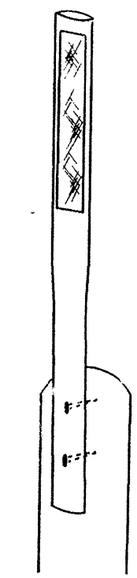

Guardrail Post Surface Mount

PLAN VIEW OF MONODIRECTIONAL MOUNTINGS

For Single and Double Delineators and Object Marker types OM-2YP(a) & OM-2SR

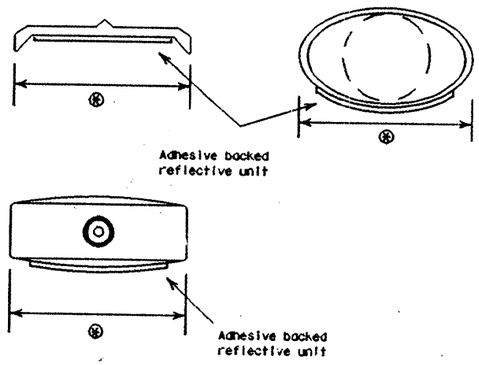

⊛ Not less than 82 mm.

Various Cross Sections may be furnished if projected width of reflective unit appears to be 76 ± 10 mm.

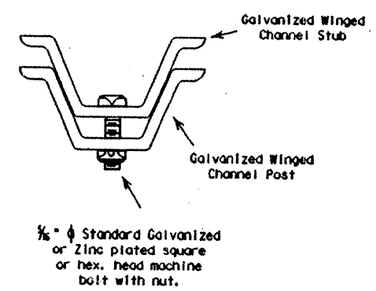

PLAN VIEW

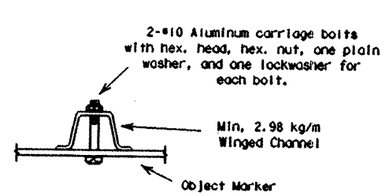

Length of post may vary to meet field conditions.

PLAN VIEW

BREAK AWAY CHANNEL POST

For Object Marker Types 1, 3 and 4

(where specified in the plans)

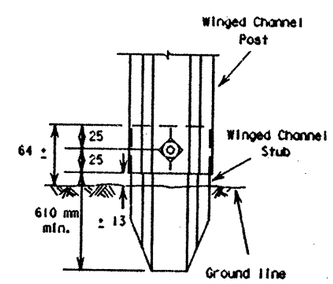

PARTIAL ELEVATION

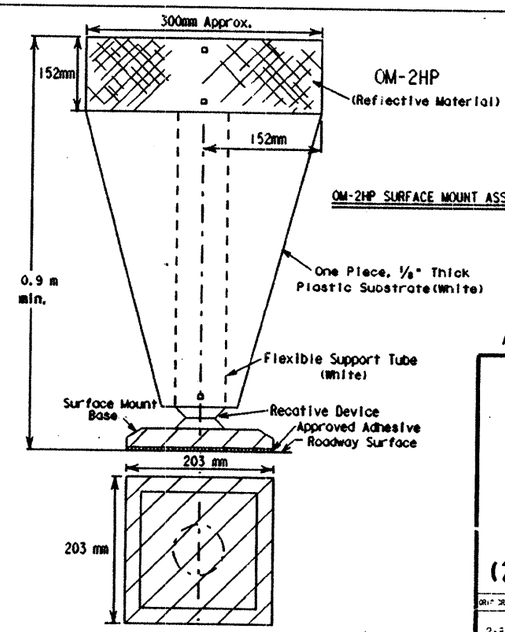

SURFACE MOUNT BASE

Flexed Base Support For OM-2HP

REV. 3-97

All dimensions are in millimeters unless otherwise noted.

STANDARD PLANS
TEXAS DEPARTMENT OF TRANSPORTATION
Traffic Operations Division

DELINEATORS & OBJECT MARKERS SAN ANTONIO STANDARD

(2 of 2) D & OM(2)-95(M)

DN: LR	CK: CW	DN: DN	CK: MT

DATE: ACC: d58hplc/usr/d580504 FILE:

LEVELS DISPLAYED

DN: TxDOT	DATE: JAN. 1981	CK: -	DW: DN	CK: -	MSG NO.:
REVISIONS 2-82 4-92 8-95	STATE DISTRICT: SAT	FEDERAL REGION: 6	FEDERAL AID PROJECT: CD 2452.01-035	SHEET: 288	
	COUNTY: BEXAR	CONTROL: 2452	SECTION: 01	JOB: 035	HIGHWAY: LP1604

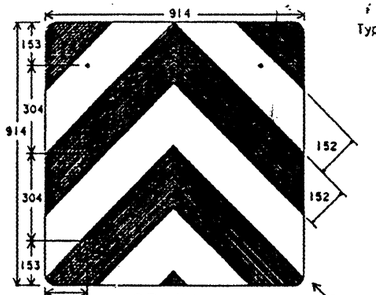

OB-3A

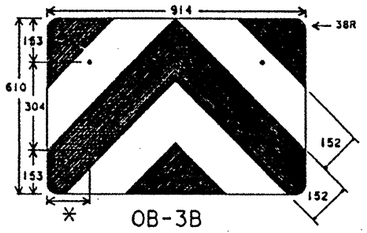

OB-3B

* adjust to fit attenuator per manufacturer's recommendation, or as directed by the Engineer.

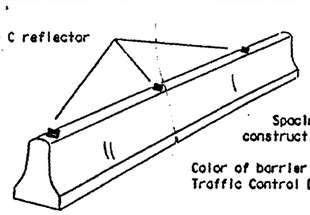

Barrier Reflectors will be installed only on barriers designated for reflectorization as required elsewhere in the plans.

Spacing of reflectors is 12 meters. Mount reflectors to barrier by construction adhesive or butyl rubber adhesive.

Color of barrier reflectors will conform to the Texas "Manual on Uniform Traffic Control Devices", (TMUTCD).

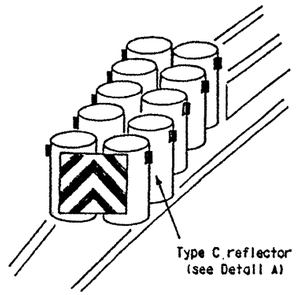

Object Marker blank to be 16 mm Plywood (Type A) in accordance with item "PLYWOOD SIGNS (TYPE A)" or 2.0 mm thick Aluminum as per Specification D-9-7110.

Mounting should be flush with top of VIA.
Minimum size 914x610 mm.

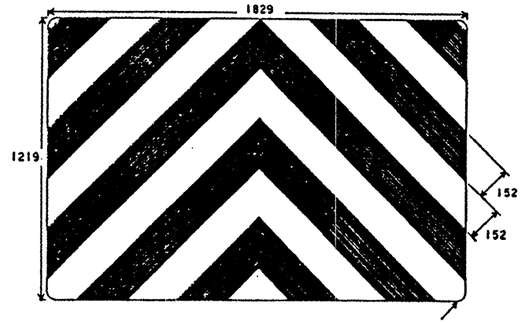

OB-3E

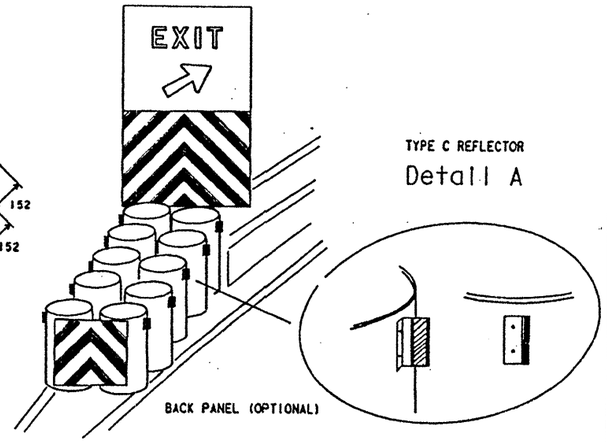

GENERAL NOTES:

1. Back Panel (OB-3E) shall be made of 16 mm plywood (Type A) panels unless otherwise noted in the plans.
2. Back panel will be mounted independent of the attenuator. The minimum mounting height is flush with the top of the attenuator.
3. Alternating flashing yellow lights may be added. Lights should be mounted minimum 1.8 m above pavement.
4. Attenuator may have additional yellow reflective and black striping, and/or reflectors placed on sides. CHEVRONS (W1-8) may be erected to delineate roadway curvature beyond the attenuator. These additional devices will be installed if required elsewhere in the plans.
5. Mount Back Panel per details on SMD Standards, or as detailed elsewhere in the plans.

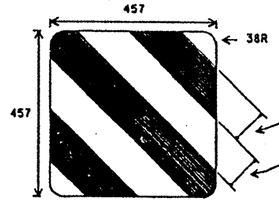

76 minimum to 102 maximum. Black stripes may be wider than yellow.

OB-3F

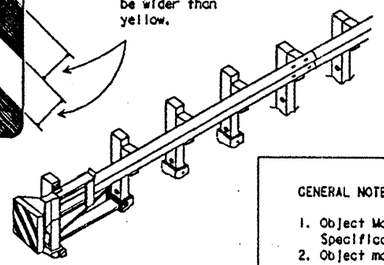

TYPICAL GUARDRAIL END TREATMENT

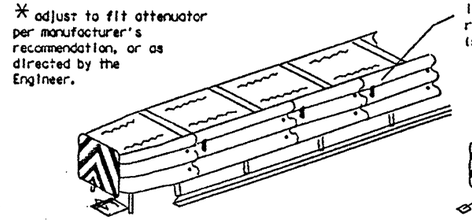

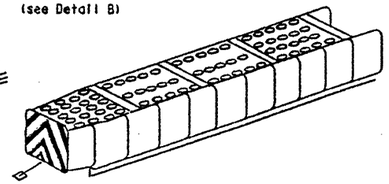

GENERAL NOTES: OBJECT MARKERS

1. Object Markers shall conform to the Texas MUTCD and meet the color and reflectivity requirement of Department Material Specification D-9-8300, Type C. Background shall be yellow reflective and Chevron shall be black.
2. Object markers OB-3C, OB-3D and OB-3F may be fabricated from reflective sheeting applied to:
   (a) galvanized sheet metal gage 0.7 to 0.8 mm per ASTM A366.025 nominal, aluminum sheet of 6061-T6 or 5052-H38 alloy approximately 1.6 mm thickness,
   (b) low or medium density polyetheylene approximately 2.0 mm thickness, or
   (c) other material as specified in the plans or approved by the Engineer.
3. OB-3F is intended for use only with guardrail end treatments (i.e. GET, CAT, BEST, BRAKEMASTER, SENTRE, etc.). OM-8F may be fabricated from adhesive backed reflective sheeting applied directly to guardrail end treatment, or applied directly to an "end cap" as per the manufacturer's recommendation. Direct applied sheeting shall provide a smooth surface and have no wrinkles, air bubbles, cuts or tears.
4. Size may be reduced to fit smaller devices, however, the minimum size shall be:
   (a) 610x610 mm for attenuators, and
   (b) 457x457 mm for guardrail end treatments.
5. Pop rivets, screws, or nuts and bolts may be used to attach object markers and reflectors. Holes, slots or other openings may be cut or drilled through ob'ect markers to allow cable or other attachments.
6. When traffic passes only on one side of attenuator, only the OM-3 marker should be installed. OM-3 should be installed per the requirements of D & OM Standards with a minimum mounting height of 450 mm.

TYPE C REFLECTORS

1. Type C reflectors shall consist of a reflector unit attached to a bracket to facilitate delineator mounting on attenuators, guardrails and concrete traffic barriers.
2. Type C reflectors may also be used to delineate side of attenuator, guardrail and concrete traffic barrier.

TRAFFIC FLOW	BOTH SIDES						ONE SIDE
ATTENUATOR TYPE	OB-3A	OB-3B	OB-3C	OB-3D	L	OM-1	
GREAT	NR	✓	NR	✓	2438	✓	
Steel Drum	✓	✓	✓	✓	2896	✓	
Hydraulic	✓	✓	NR	NR	NR	✓	
Hex Foam	✓	✓	NR	NR	NR	✓	OM-3
Low Maintenance	NR	✓	NR	✓	2438	✓	
Sand Filled Plastic Modules	NR	NR	NR	NR	NR	✓	
Sand Tire	NR	NR	NR	NR	NR	✓	

NR - Not Recommended

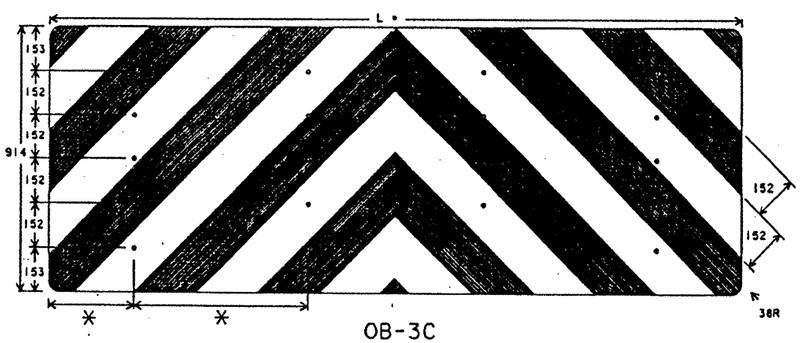

OB-3C

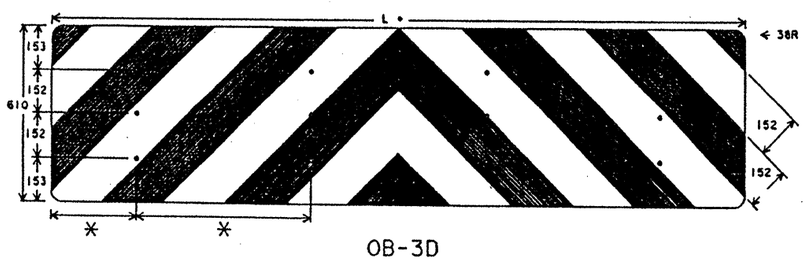

OB-3D

* spacing adjusted to attach through centerline of drum, per attenuator manufacturers recommendation, or as directed by the Engineer.

Mounting should be flush with top of attenuator.
Minimum size 2438x610 mm.

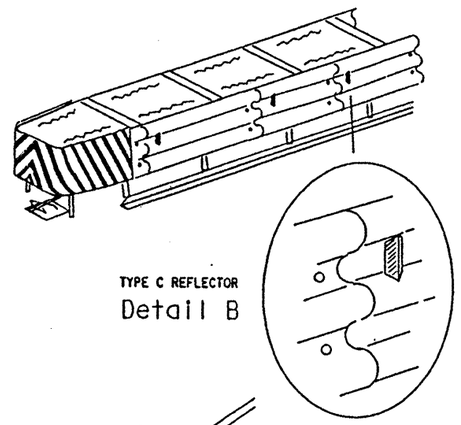

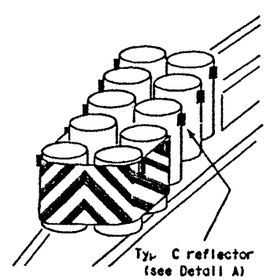

All dimensions are in millimeters unless otherwise noted.

STANDARD PLANS
TEXAS DEPARTMENT OF TRANSPORTATION
Traffic Operations Division

DELINEATORS & OBJECT MARKERS FOR VEHICLE IMPACT ATTENUATORS

D & OM(VIA)-95(M)

1996 DRAW DATE: DEC. 1989	DN-LR	CK-	DW-DN	CK-	HCS VOL-
REVISIONS 4-90 4-92 8-95	STATE DISTRICT 15	FEDERAL REGION 6	FEDERAL AID PROJECT CD2452-1-35		SHEET 289
	COUNTY		CONTROL	SECTION	JOB / HIGHWAY

DISCLAIMER
The use of this st. ard is governed by the "Texas E... ering Practice Act". No warranty of any kind is made by TxDOT for any purpose whatsoever. TxDOT assumes no responsibility for the conversion of this standard to other formats or for incorrect results or damages resulting from its use.

DN: CK: DW: CK:

DATE: ACC: FILE:

GENERAL NOTES

1. Additional details may be provided in the plans concerning sign size, type of channelization devices, sequence of work details, and required measures needed to control traffic during changes in the sequence of work.
2. All traffic control devices shall conform with the Texas "Manual on Uniform Traffic Control Devices for Streets and Highways" (TMUTCD), and shall be maintained as directed by the Engineer. Additional guidelines for traffic control devices may be found in the TMUTCD.
3. All distance and spacing shown on the TCP(M) Standards are approximate.
4. All traffic control devices used during nighttime shall be reflectorized, illuminated from within or externally illuminated.
5. Additional information for fabrication, erection and usage of the following traffic control devices is found in the (TMUTCD) and Barricade and Construction (BC)(M) Standards:

BARRICADES	BC(2)(M) and BC(3)(M)
CONES	BC(3)(M)
BARRIER DELINEATION	WZ(BD)(M)
DRUMS	BC(3)(M)
PAVEMENT MARKINGS	BC(9)(M) and BC(10)(M) WZ(STPM)(M) or TCP(7-1)(M) if applicable
SIGNS	BC(1)(M), BC(2)(M), BC(4)(M), BC(5)(M), BC(6)(M), BC(7)(M), BC(8)(M)

6. Work area operations are defined as follows:
   Long-term stationary - Work that occupies a location more than 3 days.
   Intermediate-term stationary - Work that occupies a location overnight to 3 days.
   Short-term stationary - Daytime work that occupies a location from 1 to 12 hours.
   Short Duration - Work that occupies a location up to 1 hour.
   Mobile - Work that moves intermittently or continuously.

SIGNS

1. Selection of sign size should be based on Table I.
2. Flashing warning lights, channelizing devices and/or flags may be required to call attention to the advance warning signs.
3. The words UTILITY, SIGNAL, BRIDGE, LIGHTING, SIGN, STREET or RAMP may be substituted for ROAD in all signs where applicable.
4. Advisory speed plaques, if used in conjunction with warning signs, speeds shall be determined in the field by the Engineer.
5. Regulatory signs shall be mounted at 2.1 meter minimum mounting height.
6. Warning signs may be mounted on the approved types of supports at the minimum mounting heights as stated on BC(4)(M):

   Portable (300 mm)
   Fixed (2.1 meters)

CHANNELIZING DEVICES

1. The maximum spacing between channelizing devices in a taper should be approximately equal in meters to the speed limit (S) x 0.3.
2. For intermediate term situations, when it is not feasible to remove and restore pavement markings, the channelization must be made dominant by using a very close spacing. This is especially important in locations of conflicting information, such as where traffic is directed over a double yellow centerline. In such locations a maximum channelizing device spacing of 3 meters is recommended. The 3 meter channelizing device spacing recommendation is intended for the area of conflicting information and not the entire work zone.
3. Channelizing device spacing should be reduced when placed on curves, hills or next to potential hazards. At least three channelizing devices should be in view at all times.
4. MERGING taper (lane closure with merging traffic) =L
   SHIFTING taper (traffic diverted to adjacent lane) =1/2 L
   SHOULDER taper (shoulder closed to traffic) =1/3 L
5. DOWNSTREAM taper usage is optional. When used it should be 30 meter minimum length per lane. Devices should be spaced at approximately 6 meter intervals.
6. ONE LANE, TWO-WAY taper is intended for a portion of the road controlled by STOP, YIELD traffic signals or flagger and used alternately by traffic in each direction. It should be 15-30 meter length with devices spaced at approximately 6 meter intervals.
7. The selection of channelizing devices should be based on degree of hazard associated with the work area. The selection priority of channelizing devices, in the order of increasing hazard recognition are:

   portable mounted delineators
   700 mm cones
   900 mm or more tubular cones
   portable mounted vertical panels
   900 mm cones
   Type I Barricade
   Type II Barricade
   plastic drums
   MBGF, fixed or barrel mounted
   concrete traffic barrier

8. Arrow panels used on two-way, two-lane roadways should flash in the four corner CAUTION display.

FLAGGER CONTROL

1. Flagger shall wear orange safety vests. Flaggers should wear saftey hats to provide a professional image to the motorist and to protect the head from flying objects.
2. STOP/SLOW paddles shall be used as the primary method to control traffic by flaggers. The STOP/SLOW paddle minimum size is 450x450 mm. Paddles may be attached to a 1500 mm staff for easier handling. The larger size (600x600 mm) should be attached to a 1500 mm staff.
3. The 600 mm paddle should be used when the posted speed is 45 MPH or greater.
4. Flags are only used to control traffic for emergency situations and the STOP/SLOW paddles are not available. Flags shall be 600 mm square and securely fastened to a staff approximately 900 mm long.
5. Flaggers may carry hand held air horns to alert workers of an emergency condition.
6. For one lane two-way traffic control, one or more flaggers should be used where traffic density, road conditions or motorists' sight distance justify their use. If flaggers are used, the taper should be reduced to 15-30 meters. When flaggers are used to control traffic, the FLAGGER symbol sign (FCW20-7a) shall be used. When flaggers are used, the BE PREPARED TO STOP sign (CW20-7b) should be used. Proper spacing between signs should be maintained.
7. When flaggers are used to draw attention to traffic control devices, the FLAGGER symbol sign should be used. Proper spacing should be maintained.
8. When more than one flagger is used, a chief flagger should be assigned the responsibility of making decisions concerning traffic control.
9. The contractor has the option to use a flashing Stop/Slow Paddle conforming to Departmental Materials Specification D-9-8620.

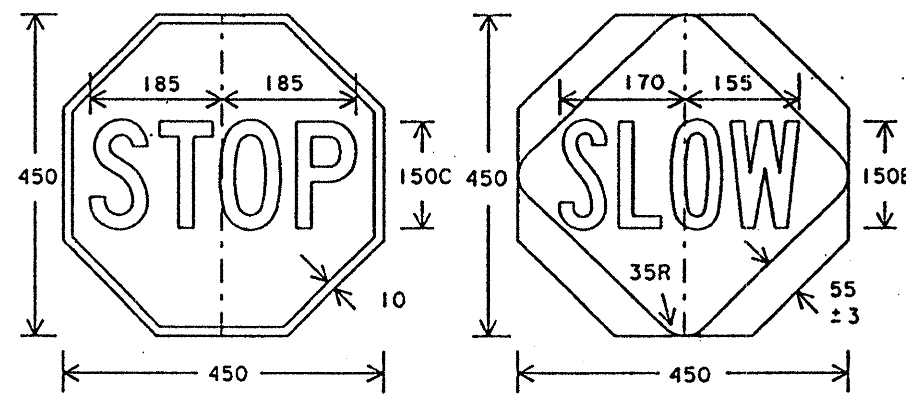

Background - Red
Legend & Border - White

Background - Orange
Legend & Border - Black

450 STOP-SLOW PADDLE

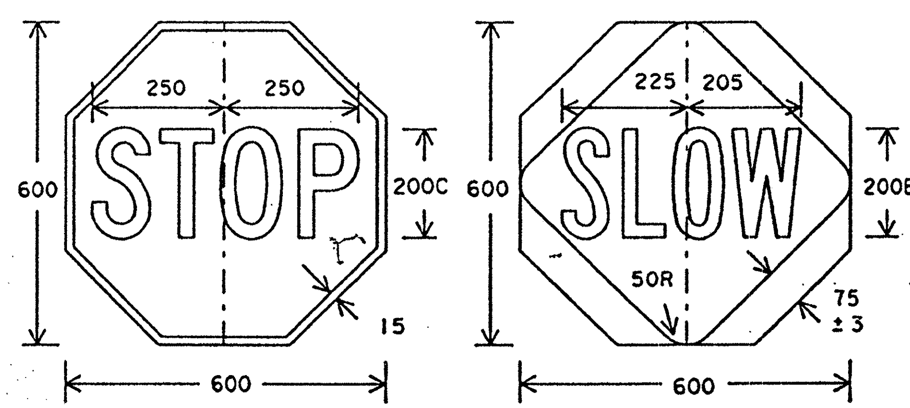

Background - Red
Legend & Border - White

Background - Orange
Legend & Border - Black

600 STOP-SLOW PADDLE

WORKER SAFETY

1. Workers exposed to traffic should wear orange safety vests.
2. Work vehicles within 9 meters of the traveled way should have strobe lights or rotating beacons in use.
3. When work vehicles are used to shadow the work area, the vehicle should be parked 9 meters or more from the work area, transmission in gear (or set in PARK), emergency brake set on, and front wheels turned away from work area. Shadow vehicles shall be equipped with truck mounted atteauators.
4. Inactive work vehicles, including workers' private vehicles, should be parked away from the work area and as close to the right-of-way line as possible.

Table I

TYPICAL CONSTRUCTION WARNING SIGN SIZE [1,5,6] AND SPACING

Roadway Classification	Posted Speed	Sign Spacing "X" ▲	Long-term Stationary Or Intermediate-term Stationary Approach Warning Signs CW20 Series And CW22-1 Sign		Short-term Stationary Or Short Duration Approach Warning Signs CW21 Series		Other Warning Signs
	MPH	Meters (Apprx.)	Standard mm	Minimum[4] mm	Standard mm [7]	Minimum[4] mm [7]	Standard mm [7]
Conven.	30	40	1200x1200	900x900	750x750 or 900x900	600x600 or 750x750	750x750 or 900x900
↓	35	50	↓	↓	↓	↓	↓
↓	40	75	↓	↓	↓	↓	↓
↓	45	100	↓	Use Standard Size	↓	Use Standard Size	↓
↓	50	120	↓		↓		↓
↓	55	150[2]	↓		↓		↓
↓	60	180[2]	↓		1200x1200		1200x1200
↓	65	210[2]	↓		↓		↓
↓	70	240[2]	↓		↓		↓
Exp or Frwy	*	* [3]	↓		**	**	**

* For typical sign spacings on expressways and freeways, see TMUTCD typical application diagrams or TCP(M) Standard Sheets.

▲ Minimum distance from work area to 1st Advance Warning sign and/or distance between each additional sign.

** Smaller sign sizes may be used where sign designs have not been included in the "Standard Highway Sign Design for Texas" manual.

General Notes:

1. Special or larger size signs may be used as may be necessary.
2. Distance between signs should be increased as required to have 460 meters advance warning.
3. Distance between signs should be increased as required to have 800 meters or more advance warning.
4. For use only on secondary roads or city streets where speeds are low.
5. Only diamond shaped warning sign sizes are indicated.
6. See sign size listing in TMUTCD, Appendix A for complete list of all available sign design sizes.
7. Where two sizes are listed, see sign size listing in TMUTCD, Appendix A for proper size.

All dimensions are in millimeters unless otherwise noted.

STANDARD PLANS
TEXAS DEPARTMENT OF TRANSPORTATION
Traffic Operations Division

TRAFFIC CONTROL PLAN

TCP NOTES-97 (M)

ORIG DRAW DATE: Febuary 1994	DN-MT	CK-	DW-ON	CK-CM	
REVISIONS	STATE DISTRICT	FEDERAL REGION	FEDERAL AID PROJECT		SHEET
8-95 1-97	15	6	Cb 2452-1-35		1290

DISCLAIMER
The use of this standard is governed by the "Texas Engineering Practice Act". No warranty of any kind is made by TxDOT for any purpose whatsoever. TxDOT assumes no responsibility for the conversion of this standard to other formats or for incorrect results or damages resulting from its use.

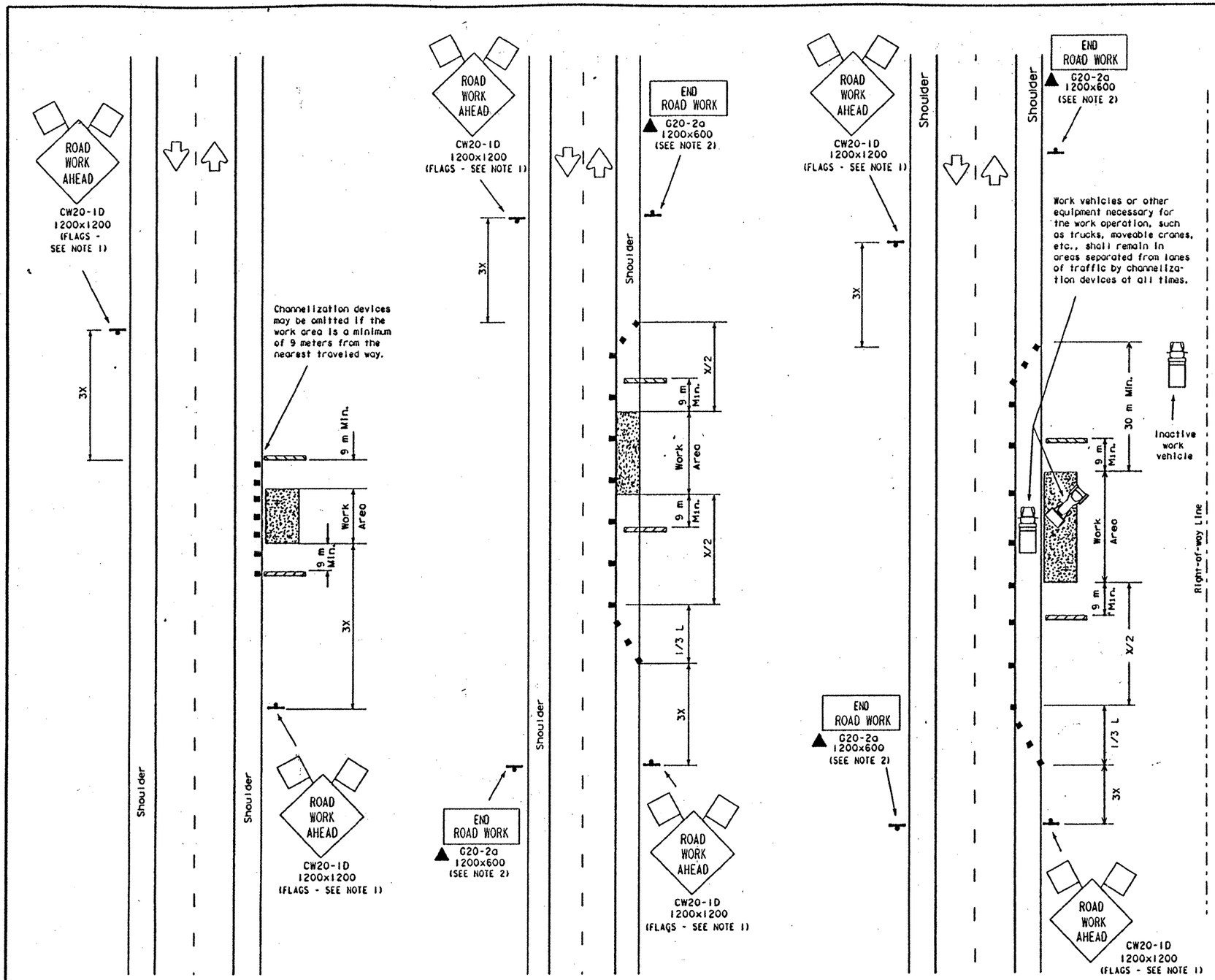

TCP (2-1a) (M)

Work Area Near Shoulder

TCP (2-1b) (M)

Work Area on Shoulder

TCP (2-1c) (M)

Work Vehicles on Shoulder

LEGEND

- Type III Barricade
- Channelizing Devices
- Flag
- Heavy Work Vehicle
- Truck Mounted Attenuator
- Trailer Mounted Flashing Arrow Panel
- Portable Changeable Message Sign
- Flagger
- Sign Post

Posted Speed *	Formula	Minimum Desirable Taper Lengths ** 3.0 m Offset (meters)	3.3 m Offset (meters)	3.6 m Offset (meters)	Suggested Maximum Spacing of Device On a Taper (meters)	On a Tangent (meters)	Minimum Sign Spacing X Distance (meters)
30	$L = \frac{WS^2}{60}$	45	50	55	9	15-20	40
35		65	70	75	10	20-25	50
40		80	90	100	12	25-30	75
45	L=WS	135	150	165	13	25-30	100
50		150	165	180	15	30-35	120
55		165	185	200	16	35-40	150
60		180	200	220	18	40-45	* 180
65		195	215	235	19	40-50	* 210
70		210	235	255	20	40-50	* 240

* Conventional Roads Only

** Taper lengths have been rounded off.
L=Length of Taper (m) W=Width of Offset (m) S=Posted Speed (MPH)

TYPICAL USAGE:

MOBILE	SHORT DURATION	SHORT TERM STATIONARY	INTERMEDIATE TERM STATIONARY	LONG TERM STATIONARY
	✓	✓	✓	✓

GENERAL NOTES:

1. Unless otherwise stated in the plans, flags attached to signs are REQUIRED.
2. All traffic control devices illustrated are REQUIRED, except those denoted with the triangle symbol may be omitted when stated elsewhere in the plans.
3. Type III (D) barricades are required on both sides of work area at all times.
4. Stockpiled material should be placed a minimum 9 m from nearest traveled way.
5. On high speed facilities advance warning signs should be installed approximately 3X from the work area or from the beginning of a lane or shoulder taper. On low speed facilities the advance warning sign should be placed on the "X" minimum distance.

All dimensions are in millimeters unless otherwise noted.

STANDARD PLANS
TEXAS DEPARTMENT OF TRANSPORTATION
Traffic Operations Division

TRAFFIC CONTROL PLAN

TCP(2-1)-97(M)

ORIG DRAW DATE: December 1985	DN: LR	CK: MT	DN: DN	CK: MT	REG NO.
REVISIONS 2-94 8-95 1-97	STATE DISTRICT 15	FEDERAL REGION 6	FEDERAL AID PROJECT CD2452-1-35		SHEET 291
	COUNTY BEXAR		CONTROL 242	SECTION 01	JOB 035

LEVELS DISPLAYED
DATE:
ACC:
FILE:
DN:
CK:
DW:
CK:

DISCLAIMER
The use of this st ard is governed by the "Texas Eng ing Practice Act". No warrant any kind is made by TxDOT for any purpose whatsoever. TxDOT umes no responsibility for the conversion of this standard to other formats or for incorrect results or damages resulting from its use.

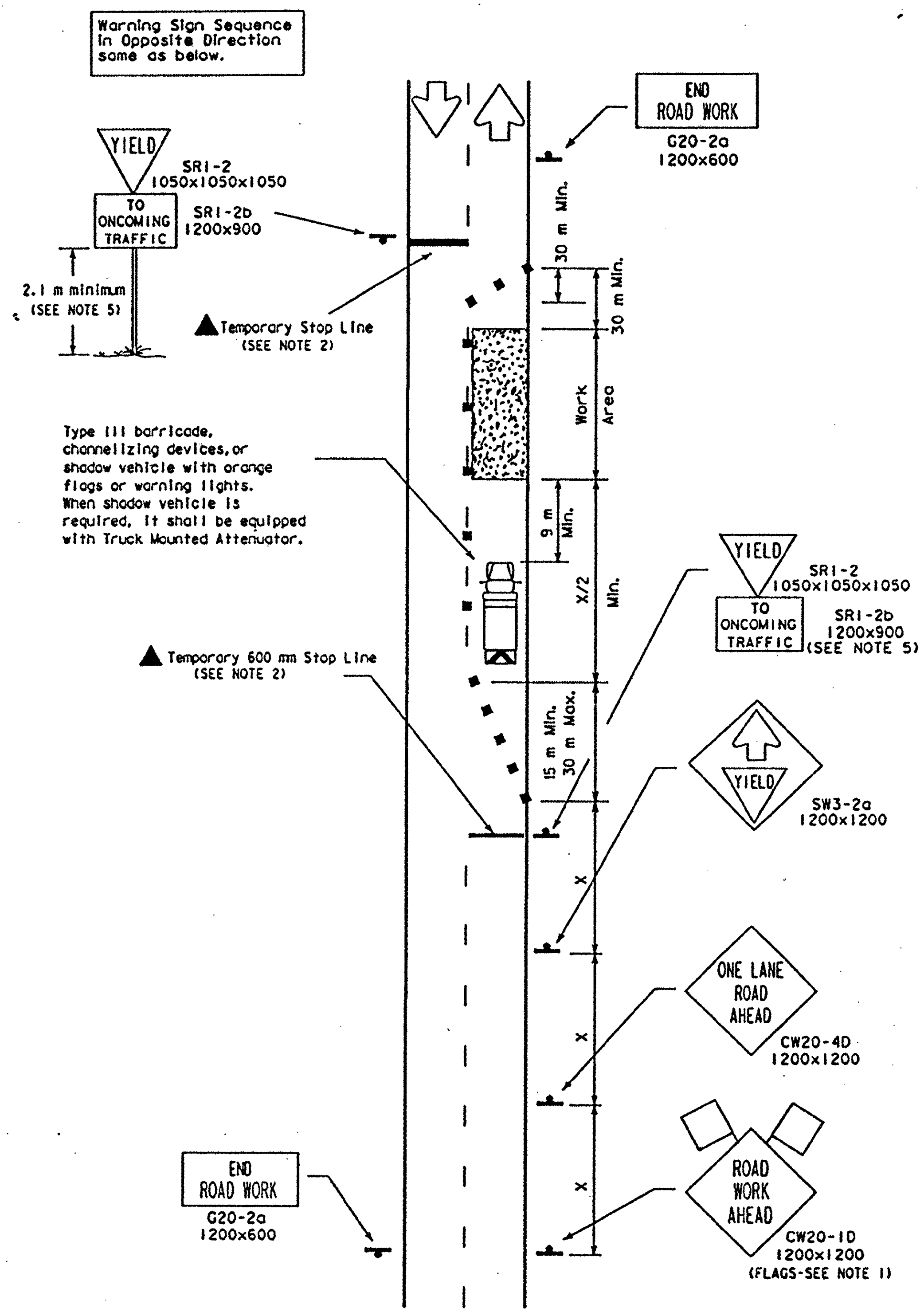

TCP (2-2a) (M)

2-Lane Roadway Without Paved Shoulders
One Lane Closed
Adequate Field of View

The requirement for shadow vehicles will be listed in the project GENERAL NOTES, Item 502, Barricades, Signs and Traffic Handling.

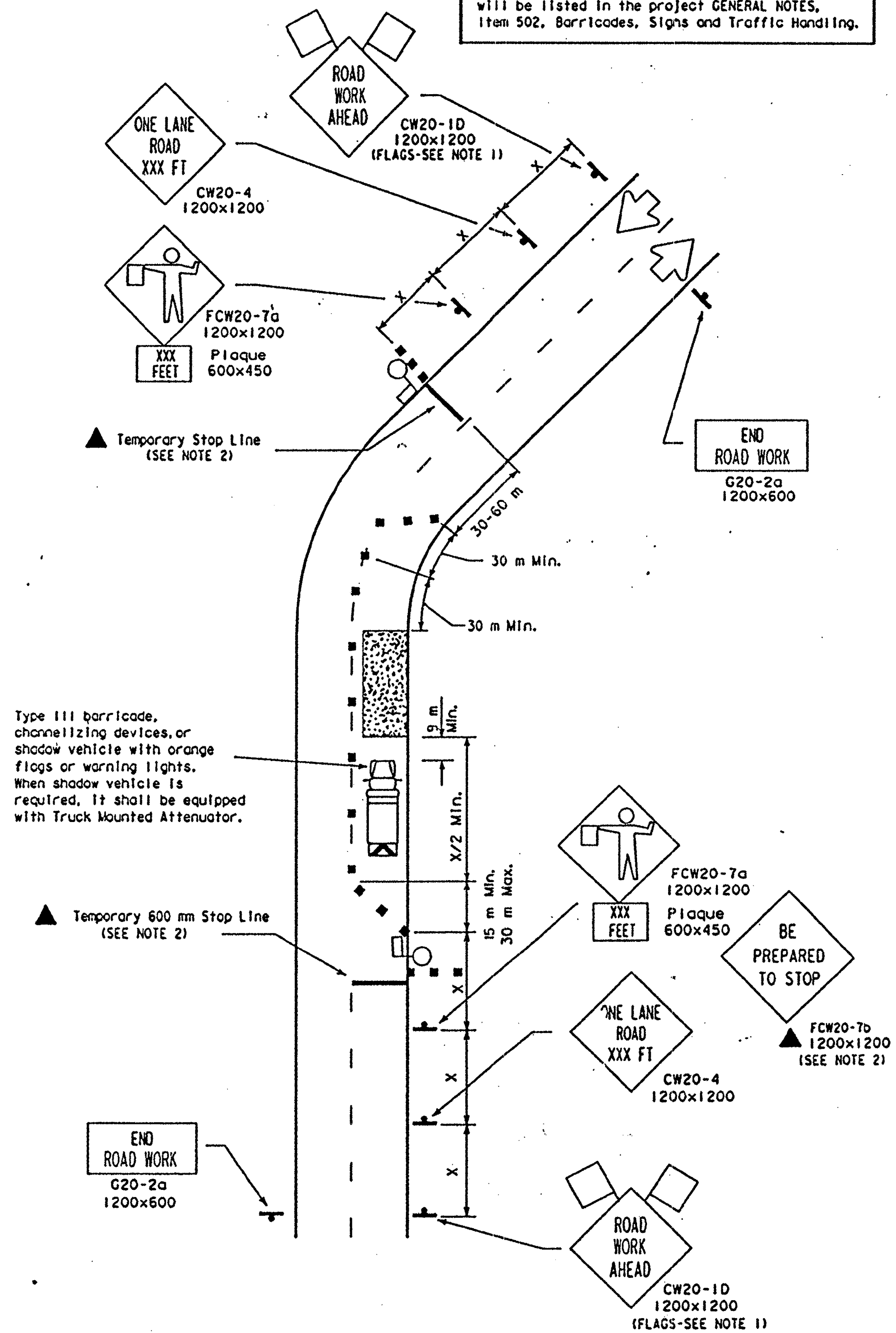

TCP (2-2b) (M)

2-Lane Roadway Without Paved Shoulders
One Lane Closed
Inadequate Field of View

LEGEND

Type III Barricade — Channelizing Devices — Flag
Heavy Work Vehicle — Truck Mounted Attenuator
Trailer Mounted Flashing Arrow Panel — Portable Changeable Message Sign
Flagger — Sign Post

Posted Speed *	Formula	Minimum Desirable Taper Lengths ** 3.0 m Offset (meters)	3.3 m Offset (meters)	3.6 m Offset (meters)	Suggested Maximum Spacing of Device On a Taper (meters)	On a Tangent (meters)	Minimum Sign Spacing X Distance (meters)
30	$L=\frac{WS^2}{60}$	45	50	55	9	15-20	40
35		65	70	75	10	20-25	50
40		80	90	100	12	25-30	75
45	L=WS	135	150	165	13	25-30	100
50		150	165	180	15	30-35	120
55		165	185	200	16	35-40	150
60		180	200	220	18	40-45	* 180
65		195	215	235	19	40-50	* 210
70		210	235	255	20	40-50	* 240

* Conventional Roads Only

** Taper lengths have been rounded off.
L=Length of Taper (m) W=Width of Offset (m) S=Posted Speed (MPH)

TYPICAL USAGE:				
MOBILE	SHORT DURATION	SHORT TERM STATIONARY	INTERMEDIATE TERM STATIONARY	LONG TERM STATIONARY
	✓	✓	✓	

GENERAL NOTES:

1. Flags attached to signs are REQUIRED.
2. All traffic control devices illustrated are REQUIRED, except those denoted with the triangle symbol may be omitted when stated elsewhere in the plans.
3. The BE PREPARED TO STOP sign may be installed after the ONE LANE ROAD XXX FT sign, but proper sign spacing shall be maintained.
4. YIELD sign traffic control may be used on projects with approaches that have adequate sight distance. For projects in urban areas, work zones should be no longer than one half city block. In rural areas on roadways with less than 4000 ADT and work areas should be no longer than 120 meters.
5. YIELD TO ONCOMING TRAFFIC sign shall be placed on a support at a 2.1 m minimum mounting height.
6. Flaggers should use two-way radios or other methods of communication to control traffic.
7. Length of work area should be based on the ability of flaggers to communicate.
8. See TCP(NOTES)(M), CHANNELIZING DEVICES, note #2 for recommended 3 meter channelizing device spacing.

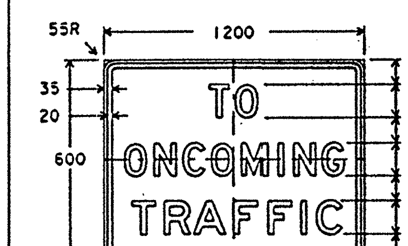

SR1-2b
1200x900

Legend & Boarder - Black
Background - White Reflective

All dimensions are in millimeters unless otherwise noted.

STANDARD PLANS
TEXAS DEPARTMENT OF TRANSPORTATION
Traffic Operations Division

TRAFFIC CONTROL PLAN

TCP(2-2)-97(M)

ORIG DRAW DATE: December 1985	DN: LR	CK: MT	DW: DN	CK: MT	REC NO.:
REVISIONS	STATE DISTRICT	FEDERAL REGION	FEDERAL AID PROJECT		SHEET
4-90 2-94 8-95	15	6	Cb2452-1-35		292
	COUNTY		CONTROL / SECTION / JOB		HIGHWAY

DN: CK: DW: CK:

LEVELS DISPLAYED / DATE: / ACC: / FILE:

DISCLAIMER
The use of this standard is governed by the "Texas Engineering Practice Act". No warranty of any kind is made by TxDOT for any purpose whatsoever. TxDOT assumes no responsibility for the conversion of this standard to other formats or for incorrect results or damages resulting from its use.

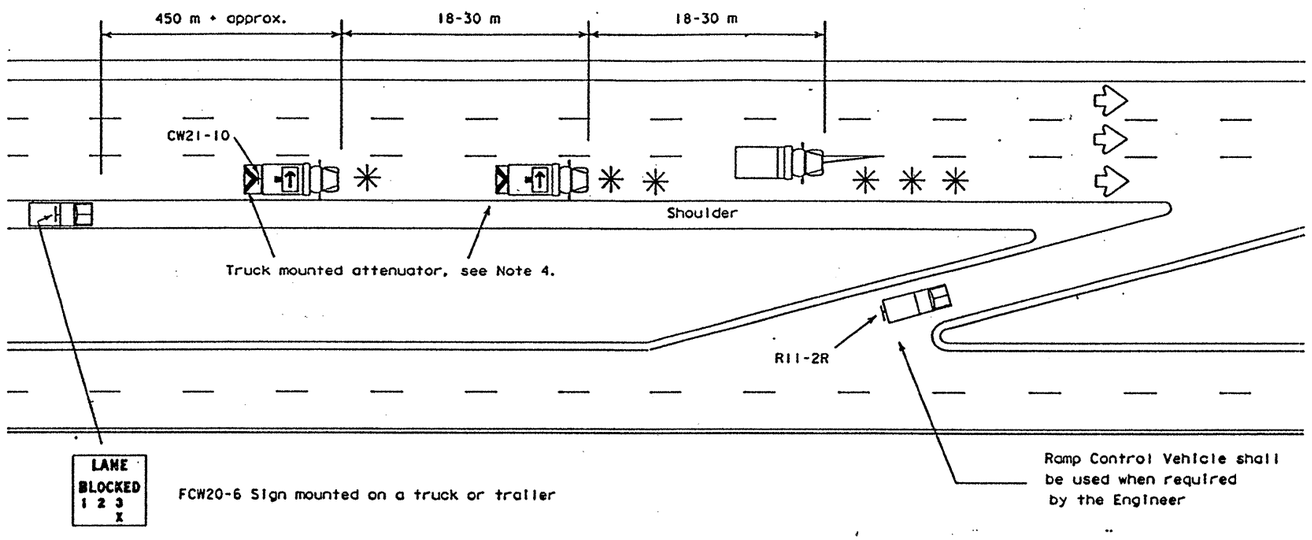

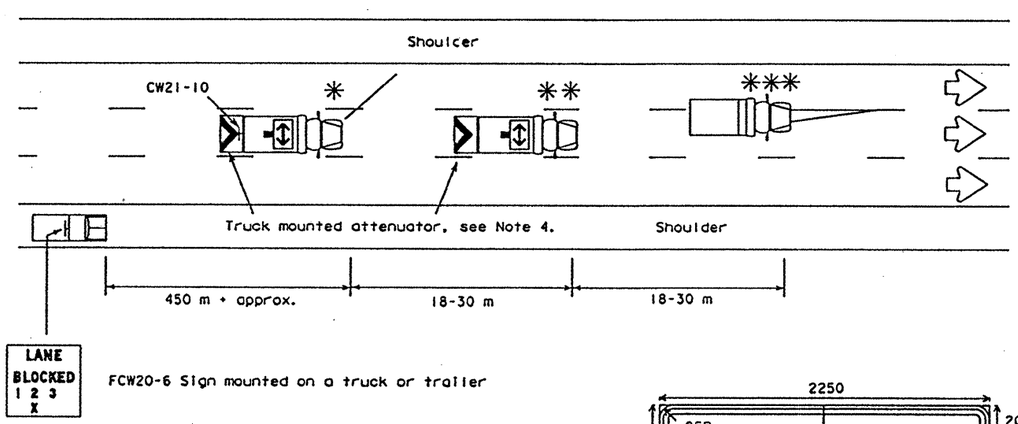

Shadow and trail vehicle shall be equipped with Truck Mounted Attenuator.

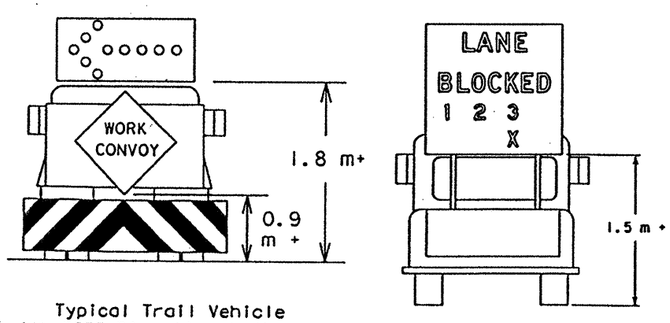

Typical Trail Vehicle with LEFT Directional display Flashing Arrow Panel

Typical Advance Warning Vehicle

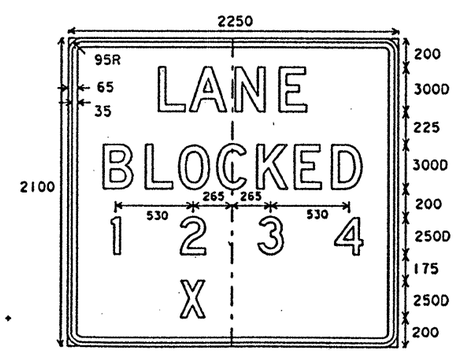

FCW20-6

LETTERS = BLACK
BORDER = BLACK
BACKGROUND = ORANGE

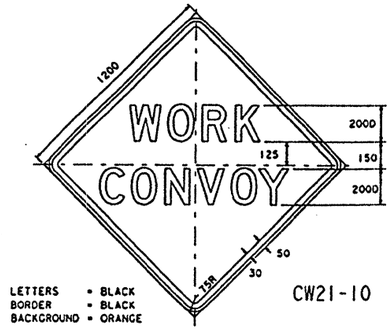

LETTERS = BLACK
BORDER = BLACK
BACKGROUND = ORANGE

CW21-10

Legend:

- * TRAIL VEHICLE
- ** SHADOW VEHICLE
- *** WORK VEHICLE
- Truck mounted attenuator
- HEAVY WORK VEHICLE

Arrow Panel Displays

- RIGHT Directional
- LEFT Directional
- RIGHT or LEFT Directional
- CAUTION mode

GENERAL NOTES:

1. TRAIL, SHADOW, LEAD, and work vehicles shall be equipped with arrow panels as illustrated. The Engineer will determine if the LEAD VEHICLE and/or TRAIL VEHICLE are required based on prevailing roadway conditions, traffic volume, and sight distance restrictions.
2. All traffic control devices shall be in accordance with the "Texas Manual on Uniform Traffic Control Devices" (TMUTCD), latest edition.
3. The use of yellow rotating beacons or strobe lights on vehicles are required unless otherwise stated elsewhere in the plans.
4. The use of truck mounted attenuators (TMA) on the SHADOW VEHICLE and the TRAIL VEHICLE are required.
5. Optional striping on the back panel of all truck mounted attenuators shall be 200 mm red and white reflective sheeting placed in an inverted "V" design. Reflective sheeting shall meet or exceed the reflectivity and color requirements of DEPARTMENTAL MATERIAL SPECIFICATION D-9-8300, TYPE C.
6. Flashing Arrow Panels shall be Type B or Type C as per BC Standards. The panel operation shall be controlled from inside the vehicle.
7. Each vehicle shall have two-way radio communication capability.
8. When work convoys must change lanes, the TRAIL VEHICLE should change lanes first to shadow the other convoy vehicles.
9. Vehicle spacing between TRAIL VEHICLE and SHADOW VEHICLE will vary depending on sight distance restrictions. Motorists approaching the work convoy should be able to see the TRAIL VEHICLE in time to slow down and/or change lanes as they approach the TRAIL VEHICLE.
10. The LANE BLOCKED sign (FCW20-6) shall be used on divided highways and may be mounted on a truck or trailer. For divided highways with two lanes in each direction, the RIGHT or LEFT LANE CLOSED sign (CW20-5, 1200x1200) may be substituted for the LANE BLOCKED sign (FCW20-6).

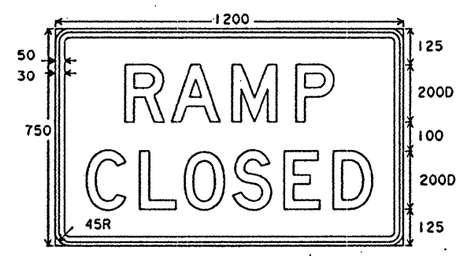

R11-2R

LETTERS = BLACK
BORDER = BLACK
BACKGROUND = WHITE

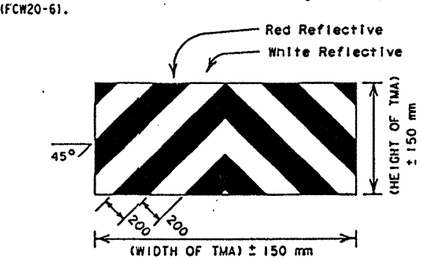

OPTIONAL STRIPING FOR TMA

STRIPING FOR TMA WILL BE REQUIRED ON ALL PROJECTS AWARDED AFTER JANUARY 1, 2000

All dimensions are in millimeters unless otherwise noted.

STANDARD PLANS
TEXAS DEPARTMENT OF TRANSPORTATION
Traffic Operations Division

TRAFFIC CONTROL PLAN MOBILE OPERATIONS DIVIDED HIGHWAYS

TCP(3-2)-97(M)

ORIG. DRAW DATE: December 1985	DN: LR	CK:	DW: DN	CK: DM	MS NO.		
REVISIONS 9-87 8-95 6-88 1-97 3-91 2-94	STATE DISTRICT	FEDERAL REGION	FEDERAL AID PROJECT			SHEET	
	15	6	CBI 2452-1-35			293	
	COUNTY			CONTROL	SECTION	JOB	HIGHWAY
				2401	01	035	

DN: CK: DW: CK:

LEVELS DT: 1 2 3 4 5 6 7 8 9 10 11 12 13 14 15 16 17 18 19 20 21 22 23 24 25 26 27 28 29 30 31 32 33 34 35 36 37 38 39 40 41 42 43 44 45 46 47 48 49 50 51 52 53 54 55 56 57 58 59 60 61 62 63

CD: 1 2 3 4 5 6 7 8 9 10 11 12 13 14 15 16 17 18 19 20 21 22 23 24 25 26 27 28 29 30 31 32 33 34 35 36 37 38 39 40 41 42 43 44 45 46 47 48 49 50 51 52 53 54 55 56 57 58 59 60 61 62 63

DATE: ACC: FILE:

DISCLAIMER:
The use of this standard is governed by the "Texas Engineering Practice Act". No warranty of any kind is made by TxDOT for any purpose whatsoever. TxDOT assumes no responsibility for the conversion of this standard to other formats or for incorrect results or damages resulting from its use.

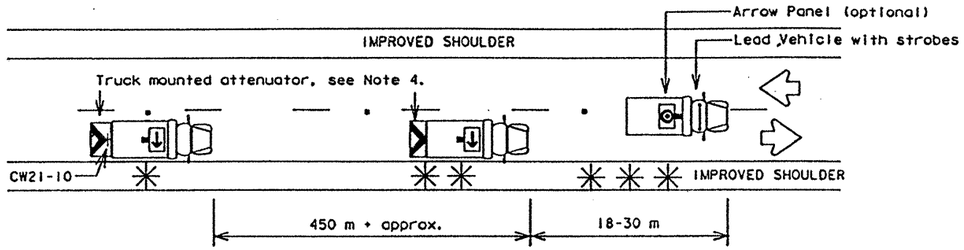

Two Lane Highway With Paved Shoulders (work on travel lane)

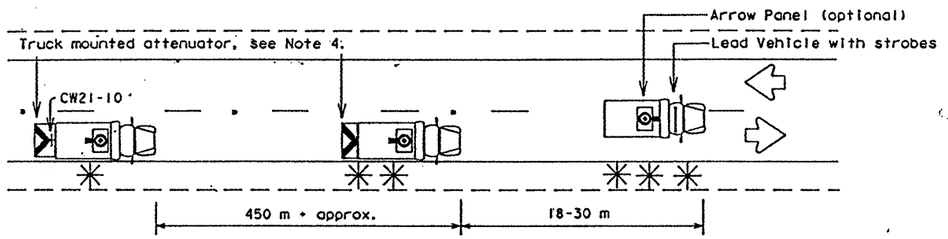

Two Lane Highway Without Paved Shoulders (work on travel lane)

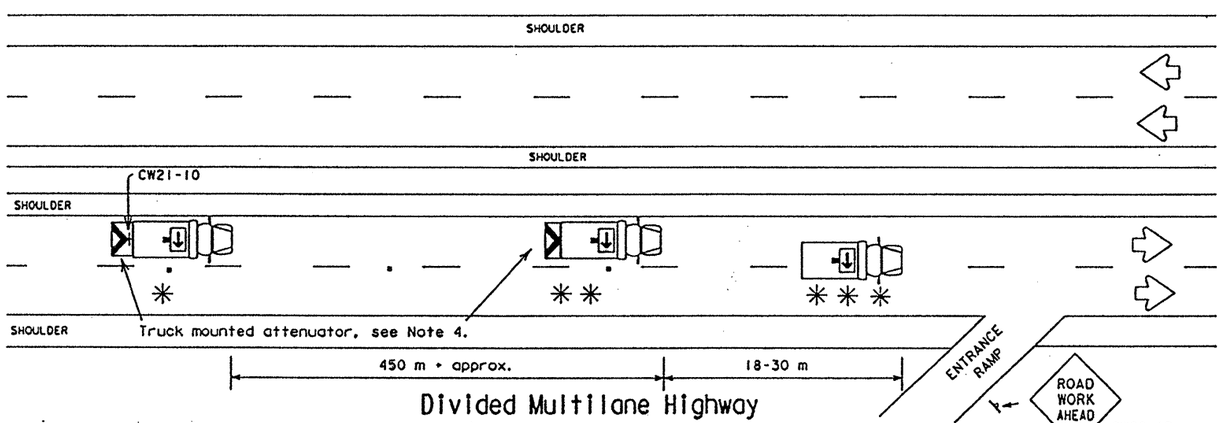

Divided Multilane Highway

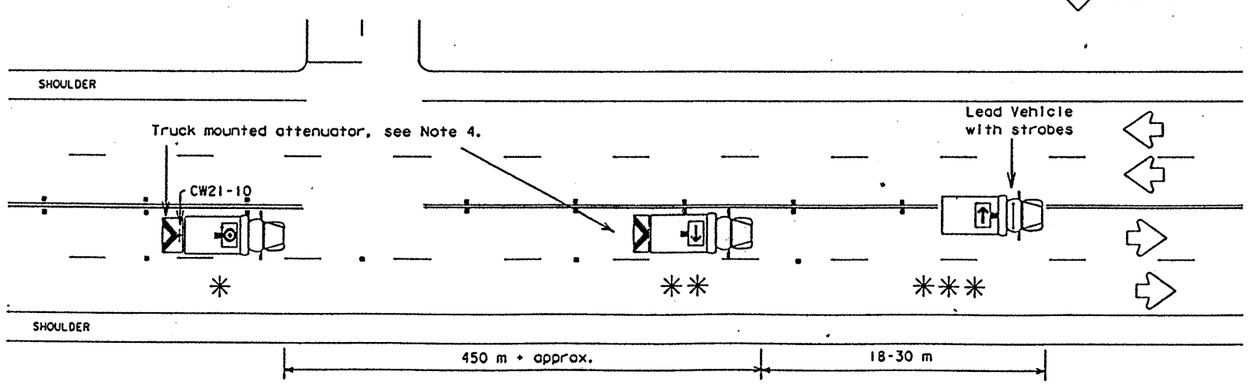

Undivided Multilane Highway

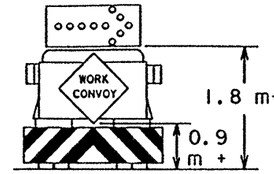

TYPICAL TRAIL VEHICLE
RIGHT Directional display
Flashing Arrow Panel

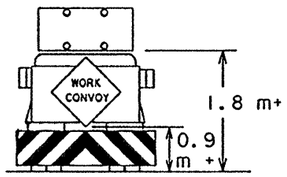

TYPICAL TRAIL VEHICLE
with (four corner flash)
CAUTION display
Flashing Arrow Panel

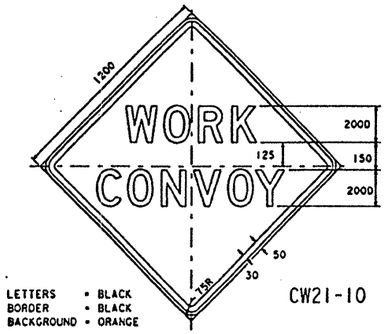

Legend:

- * TRAIL VEHICLE
- ** SHADOW VEHICLE
- *** WORK VEHICLE
- Truck mounted attenuator
- HEAVY WORK VEHICLE

Arrow Panel Displays

- RIGHT Directional
- LEFT Directional
- RIGHT or LEFT Directional
- CAUTION mode

GENERAL NOTES:

1. TRAIL, SHADOW, LEAD, and work vehicles shall be equipped with arrow panels as illustrated. The Engineer will determine if the LEAD VEHICLE and/or TRAIL VEHICLE are required based on prevailing roadway conditions, traffic volume, and sight distance restrictions.
2. All traffic control devices shall be in accordance with the "Texas Manual on Uniform Traffic Control Devices" (TMUTCD), latest edition.
3. The use of yellow rotating beacons or strobe lights on vehicles are required unless otherwise stated elsewhere in the plans.
4. The use of truck mounted attenuators (TMA) on the SHADOW VEHICLE and the TRAIL VEHICLE are required.
5. Optional striping on the back panel of all truck mounted attenuators shall be 200 mm red and white reflective sheeting placed in an inverted "V" design. Reflective sheeting shall meet or exceed the reflectivity and color requirements of DEPARTMENTAL MATERIAL SPECIFICATION D-9-8300, TYPE C.
6. Flashing Arrow Panels shall be Type B or Type C as per BC Standards. The panel operation shall be controlled from inside the vehicle.
7. Each vehicle shall have two-way radio communication capability.
8. When work convoys must change lanes, the TRAIL VEHICLE should change lanes first to shadow the other convoy vehicles.
9. Vehicle spacing between TRAIL VEHICLE and SHADOW VEHICLE will vary depending on sight distance restrictions. Motorists approaching the work convoy should be able to see the TRAIL VEHICLE in time to slow down and/or change lanes as they approach the TRAIL VEHICLE.

Shadow and trail vehicle shall be equipped with Truck Mounted Attenuator.

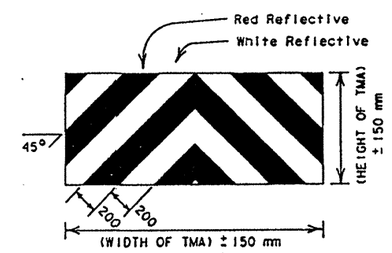

OPTIONAL STRIPING FOR TMA

STRIPING FOR TMA WILL BE REQUIRED ON ALL PROJECTS AWARDED AFTER JANUARY 1, 2000

All dimensions are in millimeters unless otherwise noted.

STANDARD PLANS
TEXAS DEPARTMENT OF TRANSPORTATION
Traffic Operations Division

TRAFFIC CONTROL PLAN MOBILE OPERATIONS RAISED PAVEMENT MARKER INSTALLATION

TCP(3-3)-97(M)

DATE:	FILE:
1 2 3 4 5 6 7 8 9 10 11 12 13 14 15 16	ACC:
17 18 19 20 21 22 23 24 25 26 27 28 29 30 31 32	
33 34 35 36 37 38 39 40 41 42 43 44 45 46 47 48	
49 50 51 52 53 54 55 56 57 58 59 60 61 62 63	

DN: CK: DW: CK:

DWG DRAB DATE: September 1987	DN: LR	CK:	DN: DN	CK: DW	WG NO.:
REVISIONS 6-88 3-91 2-94 8-95 1-97	STATE DISTRICT 15	FEDERAL REGION 6	FEDERAL AID PROJECT CL2452-1-35		SHEET 294
	COUNTY BEXAR		CONTROL 2452	SECTION 01	JOB 035

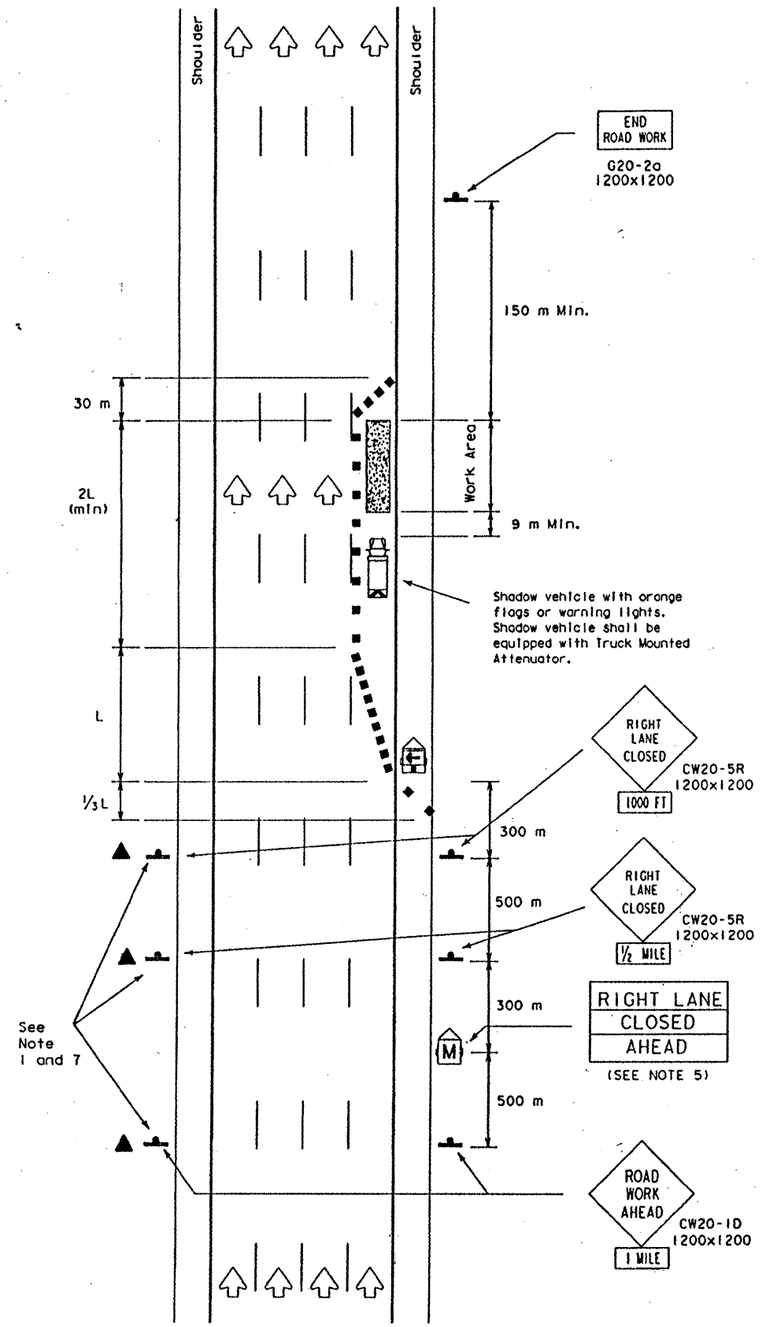

TCP (6-1a) (M)
Typical Freeway
One Lane Closure

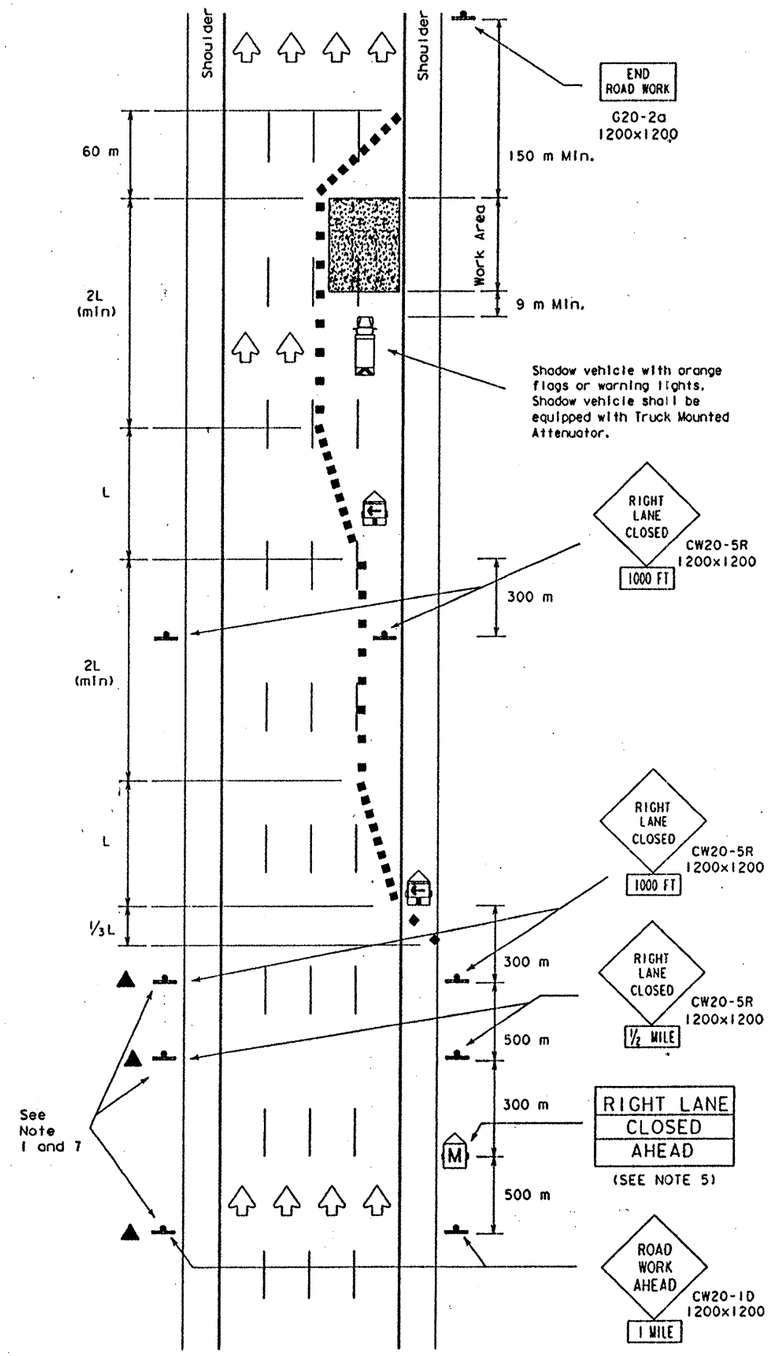

TCP (6-1b) (M)
Typical Freeway
Two Lane Closure

Shadow vehicle equipped with Truck Mounted Attenuator is required.

LEGEND

- Type III Barricade
- Channelizing Devices
- Flag
- Heavy Work Vehicle
- Truck Mounted Attenuator
- Trailer Mounted Flashing Arrow Panel
- Portable Changeable Message Sign
- Flagger
- Sign Post

Posted Speed	Formula	Minimum Desirable Taper Lengths ** 3.0 m Offset (meters)	3.3 m Offset (meters)	3.6 m Offset (meters)	Suggested Maximum Spacing of Device On a Taper (meters)	On a Tangent (meters)
30	$L = \frac{WS^2}{60}$	45	50	55	9	15-20
35		65	70	75	10	20-25
40		80	90	100	12	25-30
45	L=WS	135	150	165	13	25-30
50		150	165	180	15	30-35
55		165	185	200	16	35-40
60		180	200	220	18	40-45
65		195	215	235	19	40-50
70		210	235	255	20	40-50

** Taper lengths have been rounded off.
L=Length of Taper (m) W=Width of Offset (m) S=Posted Speed (MPH)

TYPICAL USAGE: MOBILE	SHORT DURATION	SHORT TERM STATIONARY	INTERMEDIATE TERM STATIONARY	LONG TERM STATIONARY
	✓	✓		

GENERAL NOTES:

1. All traffic control devices illustrated are REQUIRED, except those denoted with the triangle symbol may be omitted when stated elsewhere in the plans.
2. Drums are the typical channelizing device. Cones or other devices may be used if approved by the Engineer. Drums shall be used during nighttime operations.
3. All construction signs and barricades placed during any phase of work shall remain in place until removal is approved by the Engineer.
4. The Engineer may direct the Contractor to furnish additional signs and barricades as required to maintain traffic flow and motorist safety during construction.
5. Static message board or changeable message signs stating the date and duration of ramp or freeway closure shall be placed a minimum of seven (7) calendar days in advance of actual closure.
6. High level warning flags should be used on advance warning signs during daytime operations. Warning lights may be used to add emphasis to advance warning signs during nighttime operations.
7. Duplicate construction warning signs should be erected on the median side of freeways where median width will permit and traffic volume justifies the signing.
8. The number of closed lanes may be increased provided the spacings of traffic control devices, taper lengths and tangent lengths meet the requirements of the TMUTCD.
9. Warning signs shown shall be appropriately altered for left lane closures.
10. The TCP details may require additional and/or relocation of route shields, guide signs, etc. to guide motorists along entire length of detour due to ramp and freeway closures.
11. See BC Standards for additional sign details.
12. When possible, changeable message signs should be located 150 meters in advance of the last available exit ramp prior to the lane closure to allow motorists an alternate route.

All dimensions are in millimeters unless otherwise noted.

STANDARD PLANS
TEXAS DEPARTMENT OF TRANSPORTATION
Traffic Operations Division

TRAFFIC CONTROL PLAN
FREEWAY LANE CLOSURE

TCP (6-1)-97 (M)

DRIG. DRAW. DATE: Feburary 1994	DN: LR	CK: CW	DW: DN	CK: MT	REV. NO.:
REVISIONS 1-97	STATE DISTRICT 15	FEDERAL REGION 6	FEDERAL AID PROJECT CD2452-1-35		SHEET 295
	COUNTY BEXAR		CONTROL 2452	SECTION 01	JOB 035
			HIGHWAY IH 1604		

Metric 201

DISCLAIMER
The use of this standard is governed by the "Texas Engin... ...ng Practice Act". No warranty of any kind is made by TxDOT for any purpose whatsoever. TxDOT assumes no responsibility for the conversion of this standard to other formats or for incorrect results or damages resulting from its use.

LEVELS DISPLAYED
DATE:
ACC:
FILE:
DN:
CK:
DW:
CK:

DISCLAIMER
The use of this standard is governed by the "Texas Engin... ...g Practice Act". No warranty of any kind is made by TxDOT for any purpose whatsoever. TxDOT assumes no responsibility for the conversion of this standard to other formats or for incorrect results or damages resulting from its use.

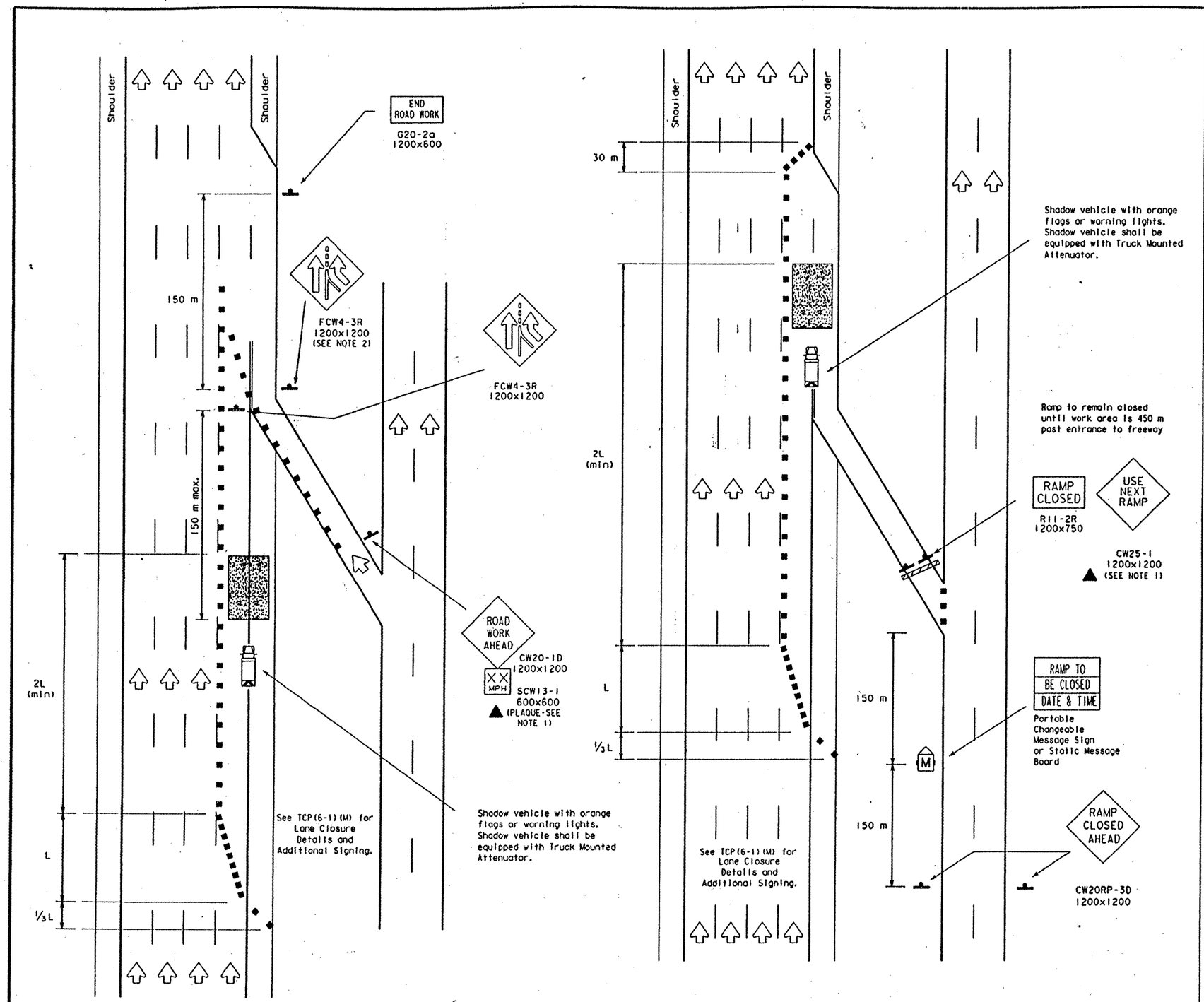

TCP (6-2a) (M)
Entrance Ramp Open
Work Within 150 Meters of Ramp

TCP (6-2b) (M)
Entrance Ramp Closed

LEGEND

- Type III Barricade
- Channelizing Devices
- Flag
- Heavy Work Vehicle
- Truck Mounted Attenuator
- Trailer Mounted Flashing Arrow Panel
- Portable Changeable Message Sign
- Flagger
- Sign Post

Posted Speed	Formula	Minimum Desirable Taper Lengths ** 3.0 m Offset (meters)	3.3 m Offset (meters)	3.6 m Offset (meters)	Suggested Maximum Spacing of Device On a Taper (meters)	On a Tangent (meters)
30	$L = \frac{WS^2}{60}$	45	50	55	9	15-20
35		65	70	75	10	20-25
40		80	90	100	12	25-30
45	L=WS	135	150	165	13	25-30
50		150	165	180	15	30-35
55		165	185	200	16	35-40
60		180	200	220	18	40-45
65		195	215	235	19	40-50
70		210	235	255	20	40-50

** Taper lengths have been rounded off.
L=Length of Taper (m) W=Width of Offset (m) S=Posted Speed (MPH)

TYPICAL USAGE:				
MOBILE	SHORT DURATION	SHORT TERM STATIONARY	INTERMEDIATE TERM STATIONARY	LONG TERM STATIONARY
	✓	✓		

GENERAL NOTES:

1. All traffic control devices illustrated are REQUIRED, except those denoted with the triangle symbol may be omitted when stated elsewhere in the plans.
2. ADDED LANE Symbol (FCW4-3R) sign may be omitted when sign between ramp and mainlane can be seen from both roadways.

ADDITIONAL REQUIREMENTS FOR LANE CLOSURES AND ADVANCE SIGNING SHALL BE AS SHOWN ON TCP (6-1)(M) OR AS DIRECTED BY THE ENGINEER.

Shadow vehicle equipped with Truck Mounted Attenuator is required.

All dimensions are in millimeters unless otherwise noted.

STANDARD PLANS
TEXAS DEPARTMENT OF TRANSPORTATION
Traffic Operations Division

TRAFFIC CONTROL PLAN
WORK AREA NEAR RAMP

TCP(6-2)-97(M)

DRIG DRAW DATE: Feburary 1994	DN: LR	CK: CW	DN: DN	CK: MT	NEG NO.:
REVISIONS 1-97	STATE DISTRICT 15	FEDERAL REGION 6	FEDERAL AID PROJECT CD2452-1-35		SHEET 296
	COUNTY BEXAR		CONTROL 2452	SECTION 01	JOB 035 HIGHWAY LP1604

DN: CK: DW: CK:
DATE: ACC: FILE:
LEVELS DISPLAYED

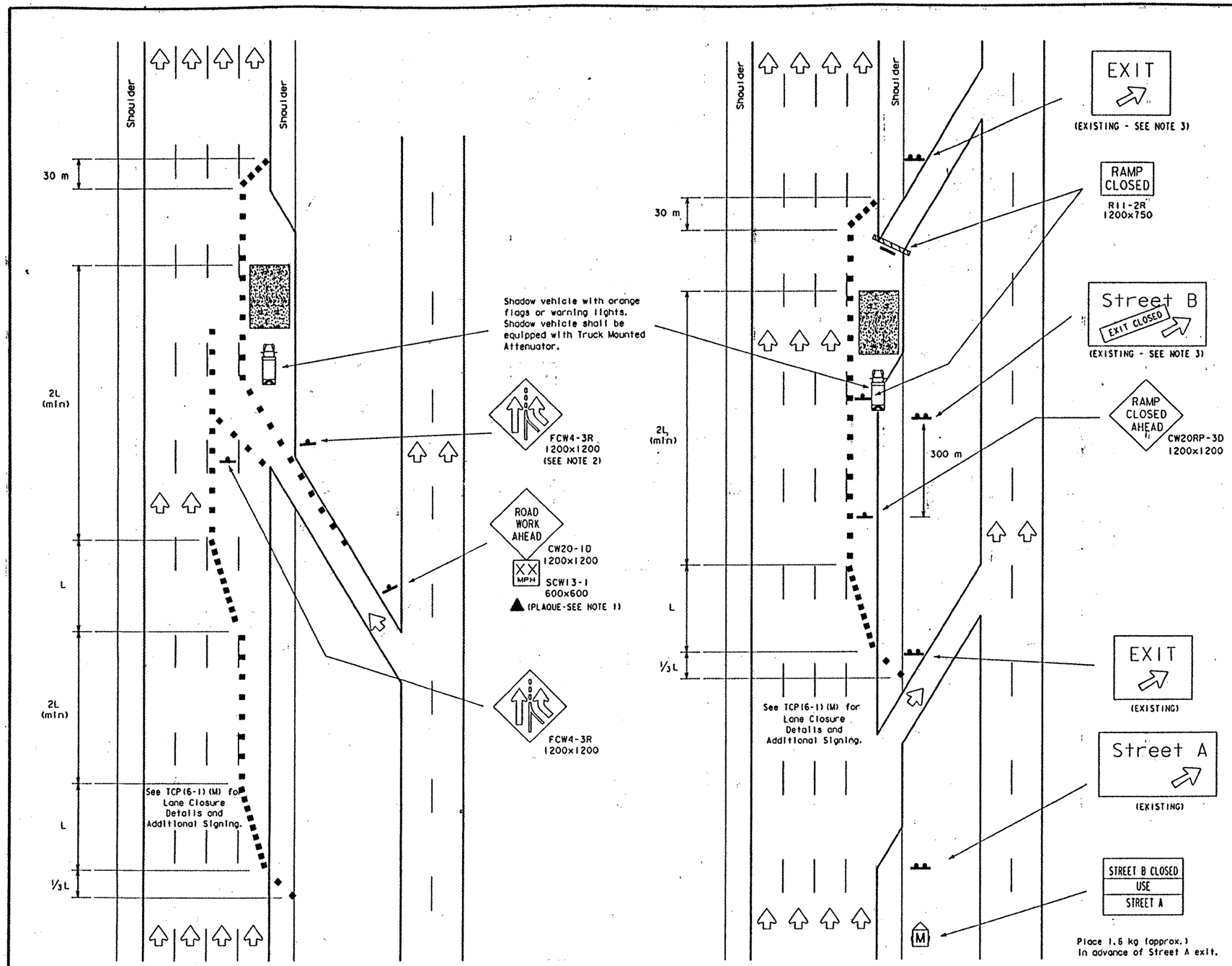

TCP (6-3a) (M)
Entrance Ramp Open

TCP (6-3b) (M)
Exit Ramp Closed
Traffic Exits Prior to Closed Ramp

LEGEND

- Type III Barricade
- Channelizing Devices
- Flag
- Heavy Work Vehicle
- Truck Mounted Attenuator
- Trailer Mounted Flashing Arrow Panel
- Portable Changeable Message Sign
- Flagger
- Sign Post

Posted Speed	Formula	Minimum Desirable Taper Lengths ✱✱ 3.0 m Offset (meters)	3.3 m Offset (meters)	3.6 m Offset (meters)	Suggested Maximum Spacing of Device On a Taper (meters)	On a Tangent (meters)
30	$L = \frac{WS^2}{60}$	45	50	55	9	15-20
35		65	70	75	10	20-25
40		80	90	100	12	25-30
45	L=WS	135	150	165	13	25-30
50		150	165	180	15	30-35
55		165	185	200	16	35-40
60		180	200	220	18	40-45
65		195	215	235	19	40-50
70		210	235	255	20	40-50

✱✱ Taper lengths have been rounded off.
L=Length of Taper (m) W=Width of Offset (m) S=Posted Speed (MPH)

TYPICAL USAGE:				
MOBILE	SHORT DURATION	SHORT TERM STATIONARY	INTERMEDIATE TERM STATIONARY	LONG TERM STATIONARY
	✓	✓		

GENERAL NOTES:

1. All traffic control devices illustrated are REQUIRED, except those denoted with the triangle symbol may be omitted when stated elsewhere in the plans.
2. ADDED LANE (FCW4-3R) sign may be omitted when sign between ramp and mainlane can be seen from both roadways.
3. Existing exit gore, exit direction, and advance guide signs not in use should be covered, removed or EXIT CLOSED (CW26-1T) sign attached. See BC(6)(M) for sign details.

ADDITIONAL REQUIREMENTS FOR LANE CLOSURES AND ADVANCE SIGNING SHALL BE AS SHOWN ON TCP (6-1)(M) OR AS DIRECTED BY THE ENGINEER.

Shadow vehicle equipped with Truck Mounted Attenuator is required.

All dimensions are in millimeters unless otherwise noted.

STANDARD PLANS
TEXAS DEPARTMENT OF TRANSPORTATION
Traffic Operations Division

TRAFFIC CONTROL PLAN

TCP(6-3)-97(M)

ORIG. DRAW DATE: Feburary 1994	DN: LR	CK: CW	DN: DN	CK: MT	MCS NO:
REVISIONS: 1-97	STATE DISTRICT: 15	FEDERAL REGION: 6	FEDERAL AID PROJECT: CD2452-1-35		SHEET: 297
	COUNTY: BEXAR		CONTROL: 2452	SECTION: 01	JOB: 035

Metric | 203

DISCLAIMER
The use of this standard is governed by the "Texas Engineering Practice Act". No warranty of any kind is made by TxDOT for any purpose whatsoever. TxDOT assumes no responsibility for the conversion of this standard to other formats or for incorrect results or damages resulting from its use.

LEVELS DISPLAYED
DATE:
ACC:
FILE:
DN:
CK:
DW:
CK:

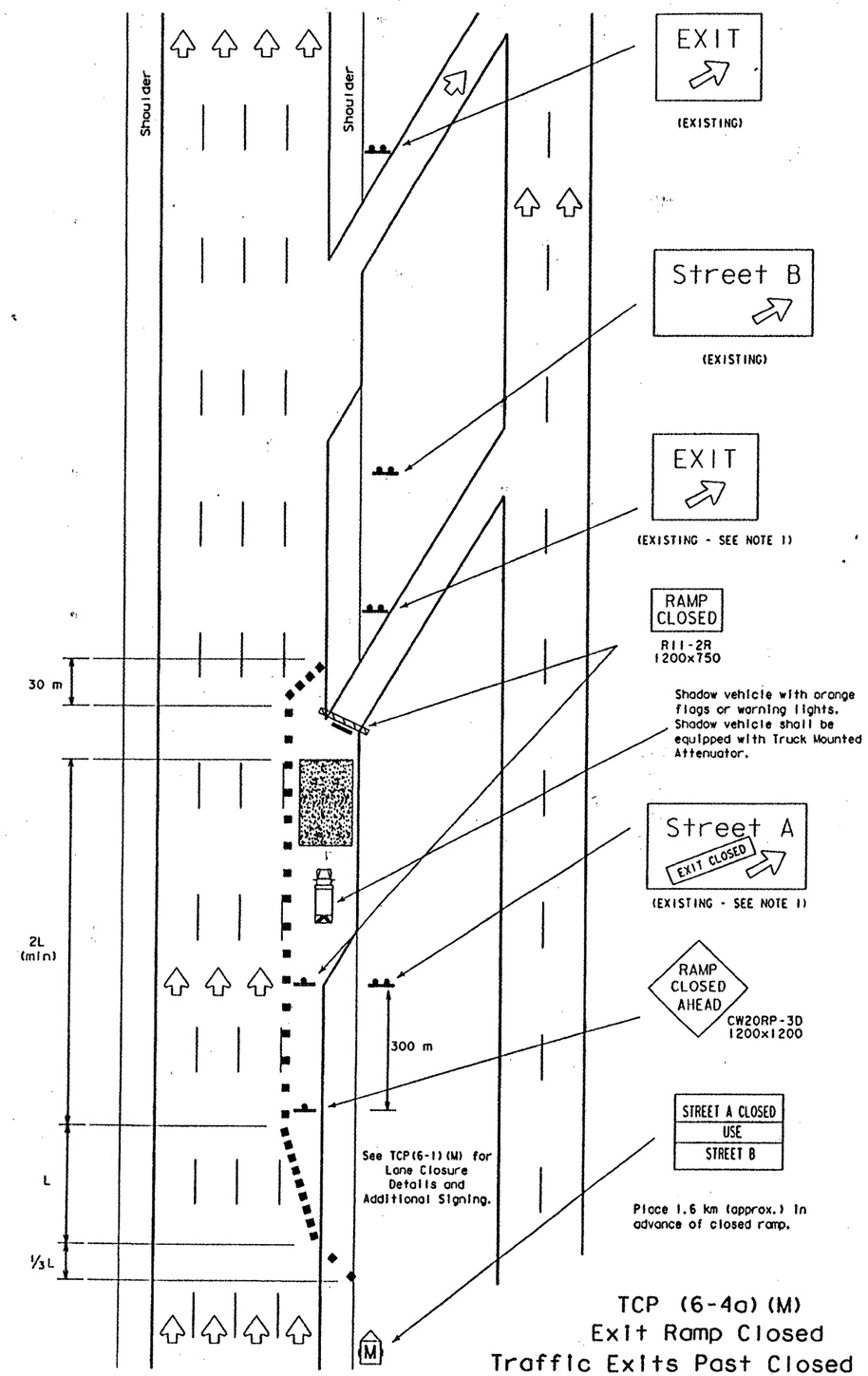

TCP (6-4a) (M)
Exit Ramp Closed
Traffic Exits Past Closed Ramp

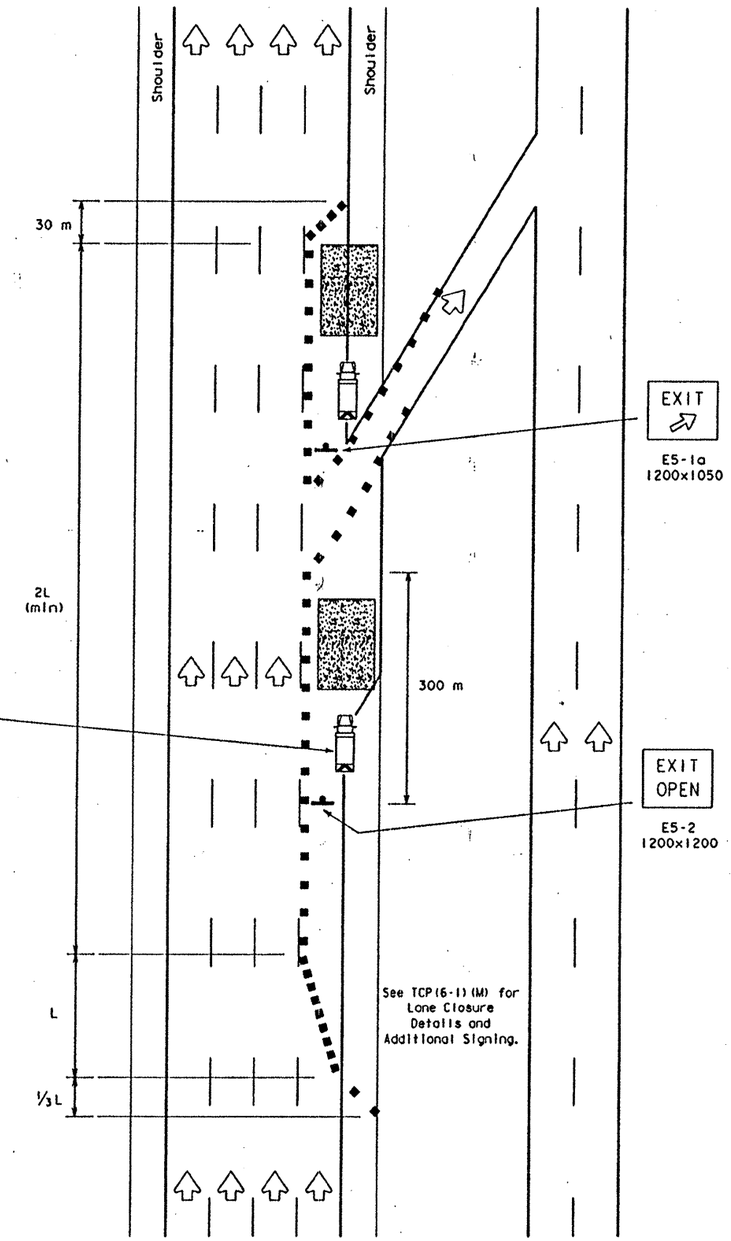

TCP (6-4b) (M)
Exit Ramp Open

LEGEND

- Type III Barricade
- Channelizing Devices
- Flag
- Heavy Work Vehicle
- Truck Mounted Attenuator
- Trailer Mounted Flashing Arrow Panel
- Portable Changeable Message Sign
- Flagger
- Sign Post

Posted Speed	Formula	Minimum Desirable Taper Lengths ** 3.0 m Offset (meters)	3.3 m Offset (meters)	3.6 m Offset (meters)	Suggested Maximum Spacing of Device On a Taper (meters)	On a Tangent (meters)
30	$L = \frac{WS^2}{60}$	45	50	55	9	15-20
35		65	70	75	10	20-25
40		80	90	100	12	25-30
45	L=WS	135	150	165	13	25-30
50		150	165	180	15	30-35
55		165	185	200	16	35-40
60		180	200	220	18	40-45
65		195	215	235	19	40-50
70		210	235	255	20	40-50

** Taper lengths have been rounded off.
L=Length of Taper (m) W=Width of Offset (m) S=Posted Speed (MPH)

TYPICAL USAGE: MOBILE	SHORT DURATION	SHORT TERM STATIONARY	INTERMEDIATE TERM STATIONARY	LONG TERM STATIONARY
	✓	✓		

GENERAL NOTES:

1. Existing exit gore, exit direction, and advance guide signs not in use should be covered, removed or EXIT CLOSED (CW26-1T) sign attached. See BC(6)(M) for sign details.
2. See BC(5)(M) for EXIT OPEN (E5-2) sign details.

ADDITIONAL REQUIREMENTS FOR LANE CLOSURES AND ADVANCE SIGNING SHALL BE AS SHOWN ON TCP (6-1)(M) OR AS DIRECTED BY THE ENGINEER.

Shadow vehicle equipped with Truck Mounted Attenuator is required.

All dimensions are in millimeters unless otherwise noted.

STANDARD PLANS
TEXAS DEPARTMENT OF TRANSPORTATION
Traffic Operations Division

TRAFFIC CONTROL PLAN

TCP(6-4)-97(M)

ORIG. DRAW DATE: Feburary 1994	DN: LR	CK: CW	DW: DN	CK: MT	SHEET NO.:
REVISIONS 1-97	STATE DISTRICT 15	FEDERAL REGION 6	FEDERAL AID PROJECT: NDS 452-1-35		SHEET 29
	COUNTY BEXAR		CONTROL 462	SECTION 01	JOB 035

DISCLAIMER
The use of this standard is governed by the "Texas Engineering Practice Act". No warranty of any kind is made by TxDOT for any purpose whatsoever. TxDOT assumes no responsibility for the conversion of this standard to other formats or for incorrect results or damages resulting from its use.

LEVELS DISPLAYED
DATE:
ACC:
FILE:
DN:
CK:
DW:
CK:

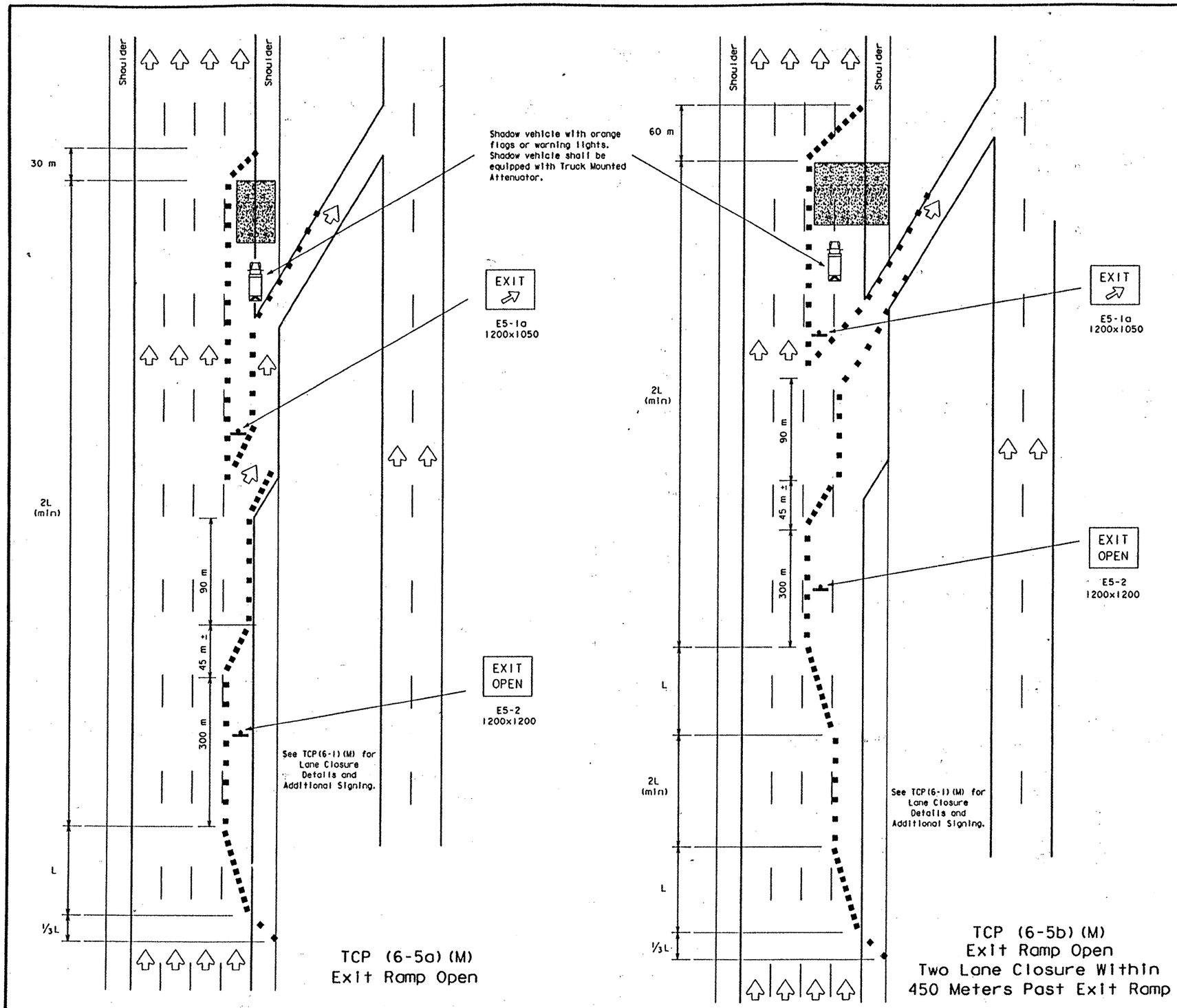

TCP (6-5a) (M)
Exit Ramp Open

TCP (6-5b) (M)
Exit Ramp Open
Two Lane Closure Within
450 Meters Past Exit Ramp

LEGEND

- Type III Barricade
- Channelizing Devices
- Flag
- Heavy Work Vehicle
- Truck Mounted Attenuator
- Trailer Mounted Flashing Arrow Panel
- Portable Changeable Message Sign
- Flagger
- Sign Post

Posted Speed	Formula	Minimum Desirable Taper Lengths ** 3.0 m Offset (meters)	3.3 m Offset (meters)	3.6 m Offset (meters)	Suggested Maximum Spacing of Device On a Taper (meters)	On a Tangent (meters)
30	$L = \frac{WS^2}{60}$	45	50	55	9	15-20
35		65	70	75	10	20-25
40		80	90	100	12	25-30
45	L=WS	135	150	165	13	25-30
50		150	165	180	15	30-35
55		165	185	200	16	35-40
60		180	200	220	18	40-45
65		195	215	235	19	40-50
70		210	235	255	20	40-50

** Taper lengths have been rounded off.
L=Length of Taper (m) W=Width of Offset (m) S=Posted Speed (MPH)

TYPICAL USAGE:				
MOBILE	SHORT DURATION	SHORT TERM STATIONARY	INTERMEDIATE TERM STATIONARY	LONG TERM STATIONARY
	✓	✓		

GENERAL NOTES

1. See BC(5)(M) for EXIT OPEN (E5-2) sign details.

ADDITIONAL REQUIREMENTS FOR LANE CLOSURES AND ADVANCE SIGNING SHALL BE AS SHOWN ON TCP (6-1)(M) OR AS DIRECTED BY THE ENGINEER.

Shadow vehicle equipped with Truck Mounted Attenuator is required.

All dimensions are in millimeters unless otherwise noted.

STANDARD PLANS
TEXAS DEPARTMENT OF TRANSPORTATION
Traffic Operations Division

TRAFFIC CONTROL PLAN

TCP(6-5)-97(M)

ORIG DRAW DATE: Feburary 1994 | DN: LR | CK: CW | DW: DN | CK: MT | NEG NO.:

REVISIONS: 1-97

STATE DISTRICT	FEDERAL REGION	FEDERAL AID PROJECT	SHEET
15	6	CD 2452-1-35	299

COUNTY	CONTROL	SECTION	JOB	HIGHWAY
BEXAR	2452	01	035	LP1604

Metric 205

DISCLAIMER
The use of this standard is governed by the "Texas Engineering Practice Act". No warranty of any kind is made by TxDOT for any purpose whatsoever. TxDOT assumes no responsibility for the conversion of this standard to other formats or for incorrect results or damages resulting from its use.

LEVELS DISPLAYED: 1 2 3 4 5 6 7 8 9 10 11 12 13 14 15 16 17 18 19 20 21 22 23 24 25 26 27 28 29 30 31 32 33 34 35 36 37 38 39 40 41 42 43 44 45 46 47 48 49 50 51 52 53 54 55 56 57 58 59 60 61 62 63

DATE: | ACC: | FILE:
DN: | CK: | DW: | CK:

DISCLAIMER
The use of this standard is governed by the "Texas Engineering Practice Act". No warranty of any kind is made by TxDOT for any purpose whatsoever. TxDOT assumes no responsibility for the conversion of this standard to other formats or for incorrect results or damages resulting from its use.

1 STARTING POSITIONS

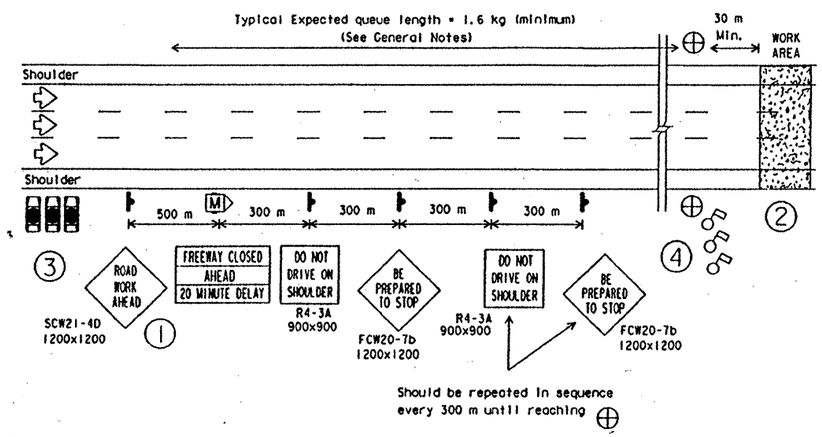

STARTING POSITION

① Traffic control devices should be installed or located near their intended position prior to beginning temporary roadway closure sequence. Duplicate signs should be erected on the median side of the roadway when median width permits and traffic density justifies the signing. To allow movement of workers, equipment, and law enforcement officer vehicles (LEOV), warning signs should not be placed on the shoulders.

② Prior to beginning the roadway closure sequence, all equipment, materials, personnel, and other items necessary to complete the work should be gathered near the work area. Entrance ramps located in area where queue is expected to build should be closed.

③ A minimum number of uniformed law enforcement officers and vehicles (LEOV) should be present:

Number of Lanes	Minimum LEOV
2	2
3	2
4	3
5	4
6	5

④ A minimum of one (1) flagger per lane is typically required for each lane of roadway to be closed. Flaggers should be placed at the CONTROL POSITION (CP) approximately 30 meters or more in advance of the work area. Use of the SLOW/STOP paddle is recommended. Flaggers should typically be at the CP as shown before the LEOV proceeds onto the roadway.

2 REDUCING SPEED OPERATIONS

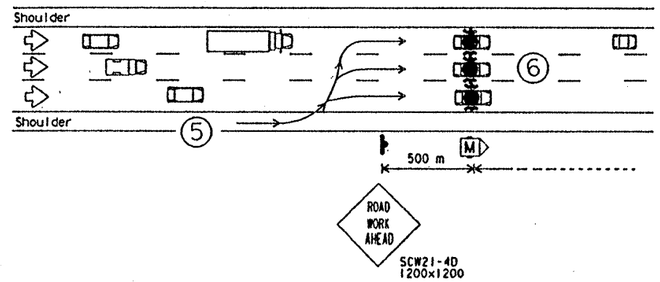

REDUCING SPEED OPERATION

⑤ Starting position of the LEOV should be in advance of the most distant warning sign(s).

⑥ Once the LEOV has achieved an abreast blocking formation while traveling toward the CP, emergency lights and headlights should be turned "ON". LEOV should maintain formation, not allow any traffic to pass, and begin to decelerate. LEOV should continue forward, gradually decelerating until all traffic is stopped at the CP as indicated by the flaggers.

3 ALL TRAFFIC STOPPED AT CP

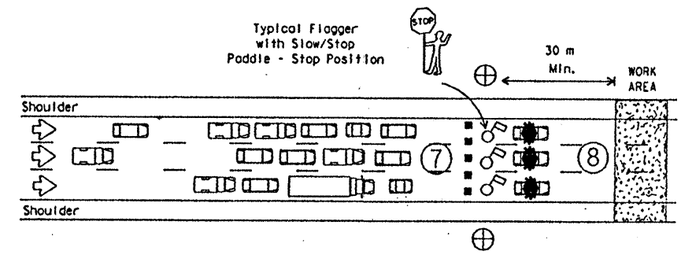

ALL TRAFFIC STOPPED AT THE CONTROL POSITION

⑦ Once the lead vehicles of traffic have stopped, CP flaggers may enter the roadway behind the LEOV and instruct traffic to remain stopped until further notice. Channelization devices may be placed in the travel lanes to prevent forward movement of traffic. Flaggers should face traffic and use the STOP paddle.

⑧ One LEOV should remain in the roadway at the CP, with emergency lights and headlights "ON", and maintain radio contact with WARNING LEOV.

LEGEND

- Channelization Device
- Flagger
- Control Position (CP)
- Portable Changeable Message Sign
- Law Enforcement Officer's Vehicle (LEOV)

TYPICAL USAGE:				
MOBILE	SHORT DURATION	SHORT TERM STATIONARY	INTERMEDIATE TERM STATIONARY	LONG TERM STATIONARY
	✓	✓		

GENERAL NOTES

All traffic control devices shall conform with the Texas "Manual on Uniform Traffic Control Devices for Streets and Highways" (TMUTCD), latest edition, and any approved changes thereto. Additional guidelines for traffic control devices may be found in the TMUTCD. Signs conflicting with the roadway closure sequence should be completely covered or removed. Additional traffic control devices may be required for closure of access roads, cross streets, exit and entrance ramps as directed by the Engineer.

Flaggers, law enforcement officers, and workers should review and understand all procedures before roadway closure sequence begins. Local emergency services and media should have advance notification of roadway closure, expected dates and approximate times of closure(s).

Law enforcement officers shall be in uniform and have jurisdiction in the locale of the work area. An additional WARNING LEOV may be used on the median side of the roadway when median shoulder width permits (see ⑨).

Work should be limited to 20 minutes maximum duration. Roadway closure should be during off-peak hours, as shown in the plans, or as directed by the Engineer. If work is not complete within 20 minutes, or if the end of the traffic queue extends past the most distant advance warning sign, the work area should be cleared of all equipment, materials, personnel, and other items, and the roadway reopened. When the queue has dissipated and traffic flow appears normal, the roadway closure sequence may be repeated.

For traffic volumes greater than 1000 Passenger Car Per Hour Per Lane (PCPHPL), or for roadway closures that exceed the 20 minute maximum, see detail elsewhere in the plans.

When possible, changeable message signs should be located in advance of the last available exit prior to the lane closure to allow motorists the choice of an alternate route.

All dimensions are in millimeters unless otherwise noted.

4 WARNING THE TRAFFIC QUEUE

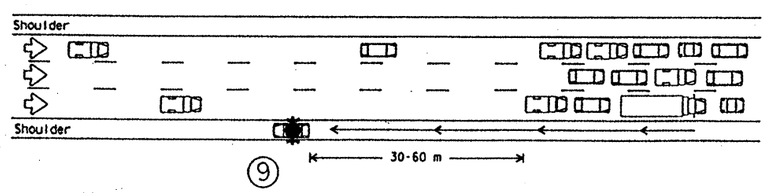

WARNING THE TRAFFIC QUEUE

⑨ The WARNING LEOV should proceed to the right shoulder of the roadway, with emergency lights and headlights "ON", and proceed 30-60 meters in advance of the traffic queue (stopped traffic) as the queue develops. When determined that limited sight distance situations may occur to motorists approaching the queue (crest of hills, sharp roadway curvatures, etc.), the WARNING LEOV may proceed 150-300 meters in advance of the queue.

5 RELEASING STOPPED TRAFFIC

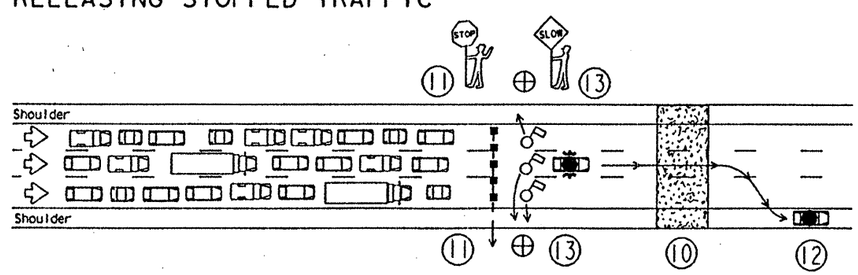

RELEASING THE STOPPED TRAFFIC

⑩ All equipment, materials, personnel, and other items should be removed from the roadway and maintain an adequate clear zone.

⑪ CP flaggers should remove channelization devices from the roadway, and remain on the shoulders with the STOP paddle facing traffic.

⑫ CP LEOV should move to the shoulder with emergency light and headlights "OFF".

⑬ CP flaggers should motion the traffic to proceed with the SLOW paddle facing traffic.

⑭ LEOV and flaggers should re-group at starting positions if necessary.

STANDARD PLANS
TEXAS DEPARTMENT OF TRANSPORTATION
Traffic Operations Division

TRAFFIC CONTROL PLAN FREEWAY (DAYTIME ONLY) CLOSURE SEQUENCE

TCP (6-8)-97 (M)

ORIG. DRAW. DATE: Feburary 1994	DN: LR	CK: CW	DN: DN	CK: MT	REG. NO.:
REVISIONS 1-97	STATE DISTRICT 15	FEDERAL REGION 6	FEDERAL AID PROJECT CD2452-1-35		SHEET 300
	COUNTY BEXAR		CONTROL 2401	SECTION 035	JOB (P)1604

Metric | 208

LEVELS DISPLAYED 1 2 3 4 5 6 7 8 9 10 11 12 13 14 15 16 17 18 19 20 21 22 23 24 25 26 27 28 29 30 31 32 33 34 35 36 37 38 39 40 41 42 43 44 45 46 47 48 49 50 51 52 53 54 55 56 57 58 59 60 61 62 63

DATE: ACC: FILE:

DN: CK: DW: CK:

DISCLAIMER
The use of this standard is governed by the "Texas Engineering Practice Act". No warranty of any kind is made by TxDOT for any purpose whatsoever. TxDOT assumes no responsibility for the conversion of this standard to other formats or for incorrect results or damages resulting from its use.

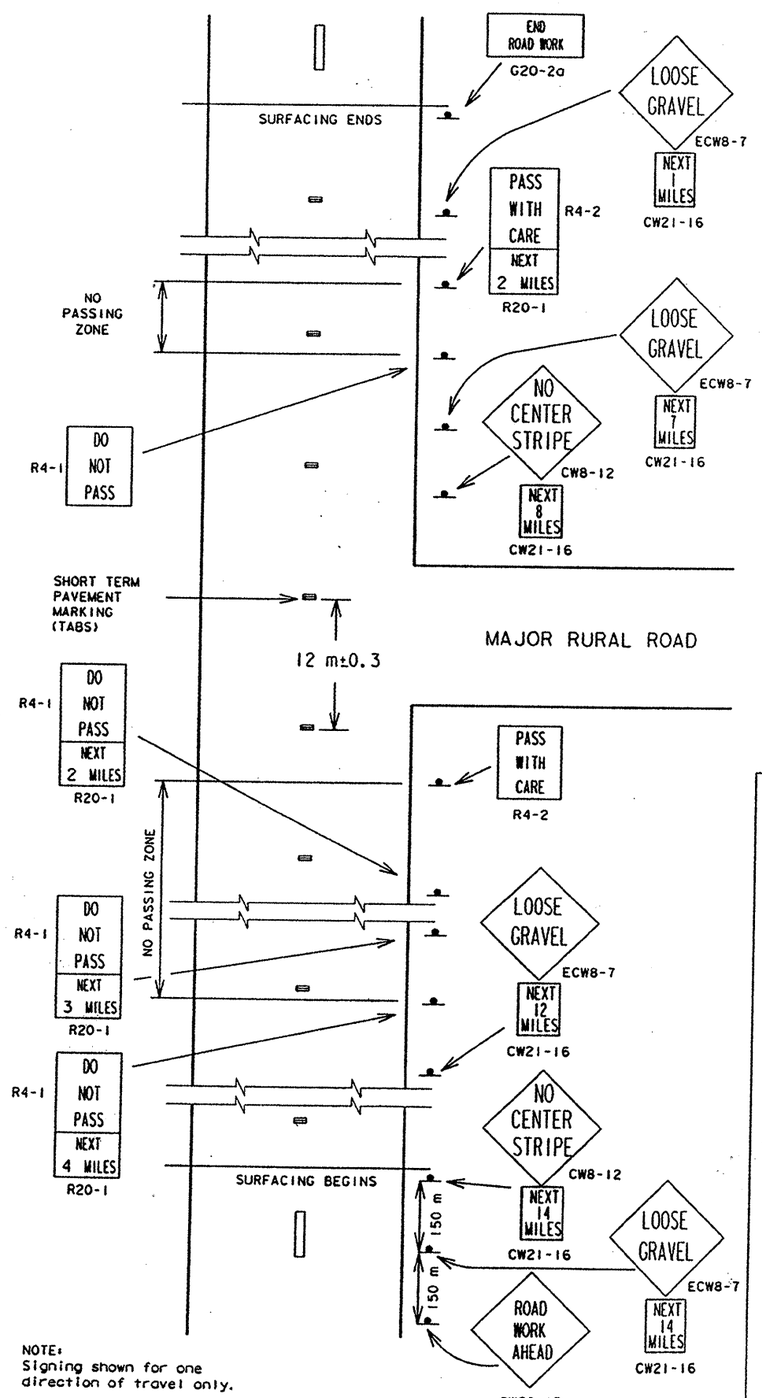

NOTE:
Signing shown for one direction of travel only.

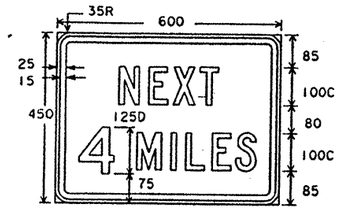

R20-1
600x450

Legend - Black
Border - Black
Background - White Refl.

FOR USE WITH REGULATORY SIGNS ONLY

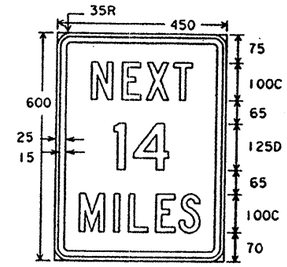

CW21-16
450x600

Legend - Black
Border - Black
Background - Orange Refl.

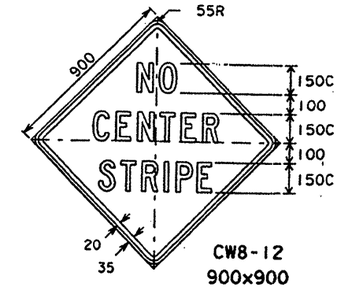

CW8-12
900x900

Legend - Black
Border - Black
Background - Orange Refl.

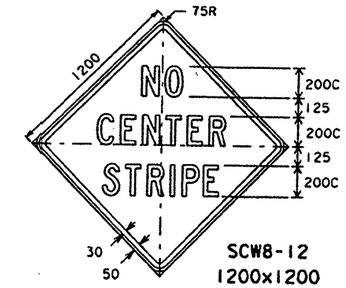

SCW8-12
1200x1200

Legend - Black
Border - Black
Background - Orange Refl.

FOR USE WITH CONSTRUCTION WARNING SIGNS ONLY

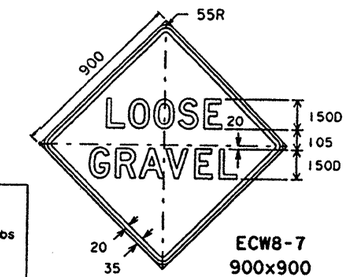

ECW8-7
900x900

Legend - Black
Border - Black
Background - Orange Refl.

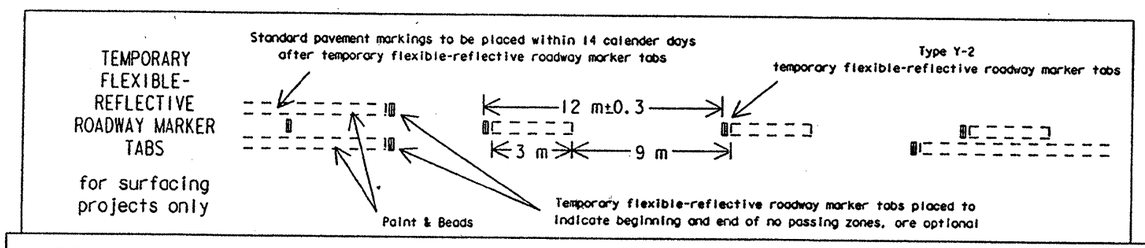

GENERAL NOTES

The traffic control devices detailed on this sheet will be furnished and erected as directed by the Engineer on sections of roadway where the surfacing operation has covered or obliterated existing pavement markings. These traffic control devices are to be used to supplement those required by BC Standards.

"DO NOT PASS" SIGN (R4-1) and NO-PASSING ZONES

Prior to the beginning of construction, all currently striped no-passing zones should be signed with the DO NOT PASS sign (R4-1) and PASS WITH CARE sign (R4-2) placed at the beginning and end of each zone for each direction of travel except as otherwise provided herein. Signs marking these individual no-passing zones need not be covered prior to construction if the signs supplement the existing pavement markings.

At the discretion of the Engineer, in areas of numerous no-passing zones, several zones may be combined and signed as a single zone. If passing is to be prohibited over one or more lengthy sections, a DO NOT PASS sign and a NEXT XX MILES sign (R20-1) may be used at the beginning of such zones. The DO NOT PASS and NEXT XX MILES signs should be repeated every 1.6 km to the end of the no-passing zone. In areas where there is considerable distance between no-passing zones, the end of a no-passing zone may be signed with a PASS WITH CARE and NEXT XX MILES sign.

Depending on traffic volumes and length of sections, it may be desirable to prohibit passing throughout the project to prevent damage to windshields and lights. The DO NOT PASS and NEXT XX MILES sign should be used and repeated as often as necessary for this purpose. Where several existing zones are to be combined into one individual no-passing zone, the sign at the beginning of the zone should be covered until the surfacing operation has passed this location so as not to have the DO NOT PASS sign conflict with existing pavement markings. Also, unless one days operation completes the entire length of such combined zones, care must be taken to place DO NOT PASS and PASS WITH CARE signs in order to sign the beginning and end of the no-passing zones in the area where the surfacing operation has stopped for the day.

R4-1 and R4-2 signs should be mounted on fixed supports as detailed on BC Standards. These signs are to remain in place until standard pavement markings are placed.

"NO CENTER STRIPE" SIGN (CW21-15)

At the time construction activity obliterates the existing centerline (low volume roads may not have an existing centerline), a NO CENTER STRIPE sign (CW8-12) should be erected at each end of the work area and just beyond major rural intersections and other location deemed necessary by the Engineer. Where possible, the signs erected at each end of the work area should be located in such a manner that drivers can read the sign and immediately see the change to no centerline. The NO CENTER STRIPE sign should be supplemented with the NEXT XX MILES sign (CW21-16) mounted below it.

The NO CENTER STRIPE sign should be erected as detailed on BC Standards. These signs are to remain in place until standard pavement markings are placed.

"LOOSE GRAVEL" SIGN (ECW8-7)

When construction begins, a LOOSE GRAVEL sign (ECW8-7) should be erected at each end of the work area and repeated at intervals of approximately 3.2 km in rural areas and closer in urban areas. The LOOSE GRAVEL sign should be supplemented with the NEXT XX MILES sign (CW21-16) mounted below it.

The LOOSE GRAVEL sign should be erected as detailed on BC Standards. They should remain in place until the loose gravel condition no longer exists.

PAVEMENT MARKINGS

Short term pavement markings for surfacing projects shall use Temporary Flexible-reflective Roadway Marker Tabs. Tabs are to be installed to provide true alignment for striping crews or as directed by the Engineer. Tabs will be placed at the spacing indicated. Tabs should be applied to the pavement no more than two (2) days before the surfacing is applied. After the surfacing is rolled and swept the cover over the reflective strip shall be removed. Tabs shall NOT be used to simulate edge lines.

TYPICAL USAGE:				
MOBILE	SHORT DURATION	SHORT TERM STATIONARY	INTERMEDIATE TERM STATIONARY	LONG TERM STATIONARY
	✓	✓	✓	✓

All dimensions are in millimeters unless otherwise noted.

STANDARD PLANS
TEXAS DEPARTMENT OF TRANSPORTATION
Traffic Operations Division

TRAFFIC CONTROL DETAILS for SURFACING OPERATIONS

TCP(7-1)-97(M)

DATE DRAWN DATE: MARCH 1991	DN: LR	CK: MT	DW: DN	CK:	MCC NO.:
REVISIONS 4-92 1-97	STATE DISTRICT 15	FEDERAL REGION 6	PROJECT CD2452-1-35		SHEET 300A
	COUNTY BEXAR		CONTROL 2452	SECTION 01	JOB 635 HIGHWAY LU604

LEVELS DETAILED 1 2 3 4 5 6 7 8 9 10 11 12 13 14 15 16 17 18 19 20 21 22 23 24 25 26 27 28 29 30 31 32 33 34 35 36 37 38 39 40 41 42 43 44 45 46 47 48 49 50 51 52 53 54 55 56 57 58 59 60 61 62 63

DATE: ACC: FILE:

DN: CK: DW: CK:

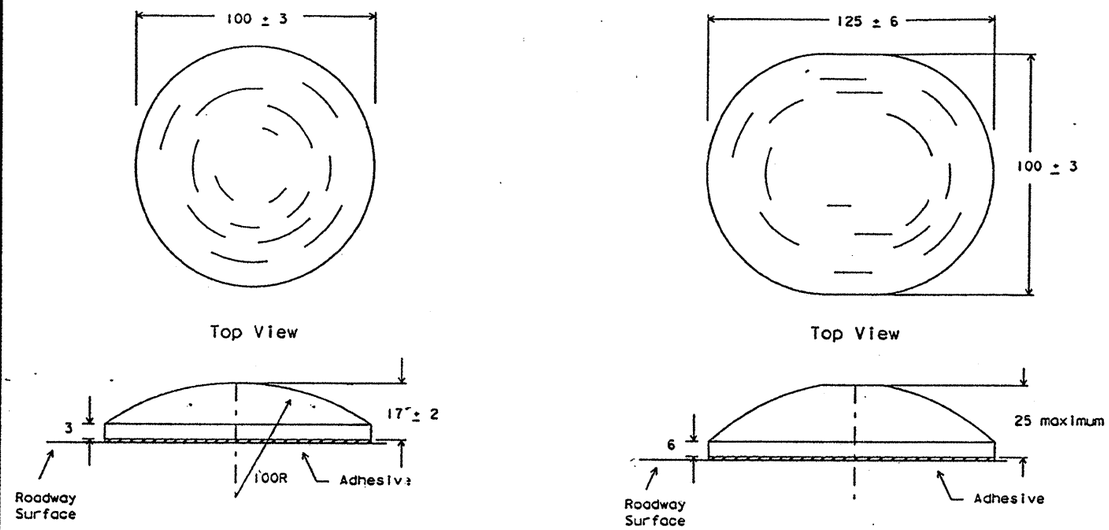

TRAFFIC BUTTONS

(NON-REFLECTORIZED)

NOTE: Minimum area of markers shall be not less than 8050 square mm.
Either shape may be used but the same shape shall be used through out the project.

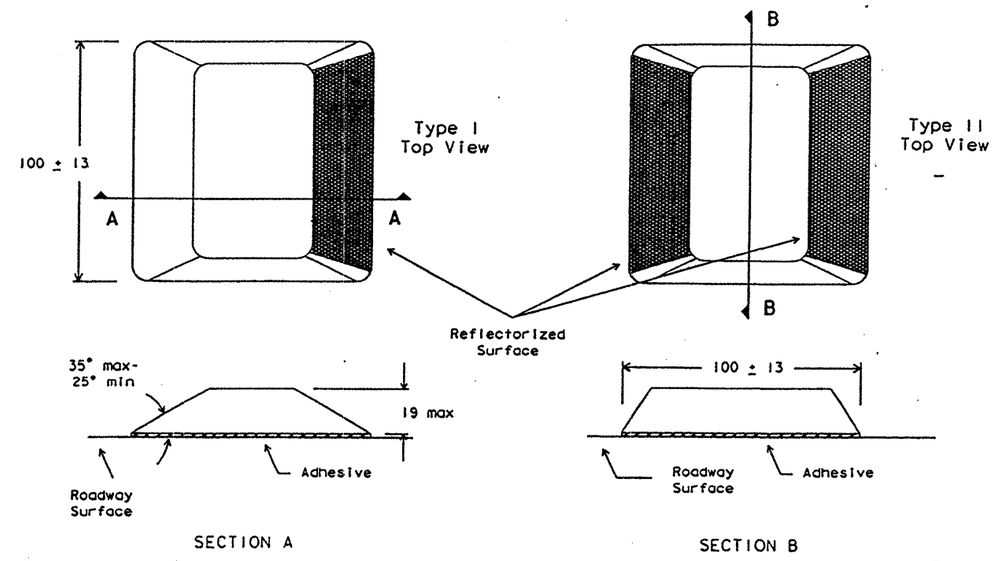

RAISED PAVEMENT MARKERS

(REFLECTORIZED)

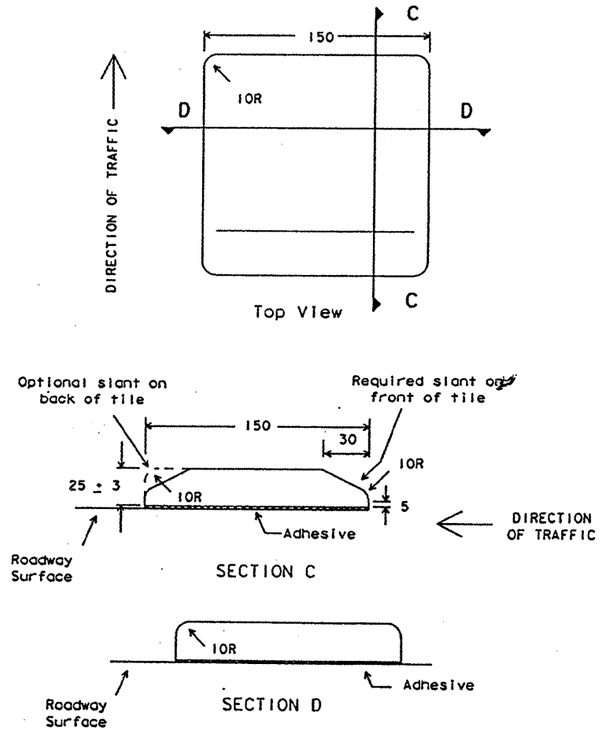

JIGGLE BAR TILES

(NON-REFLECTORIZED)

"Jiggle Bars" consist of a number of Jiggle Bar Tiles placed in a linear configuration.

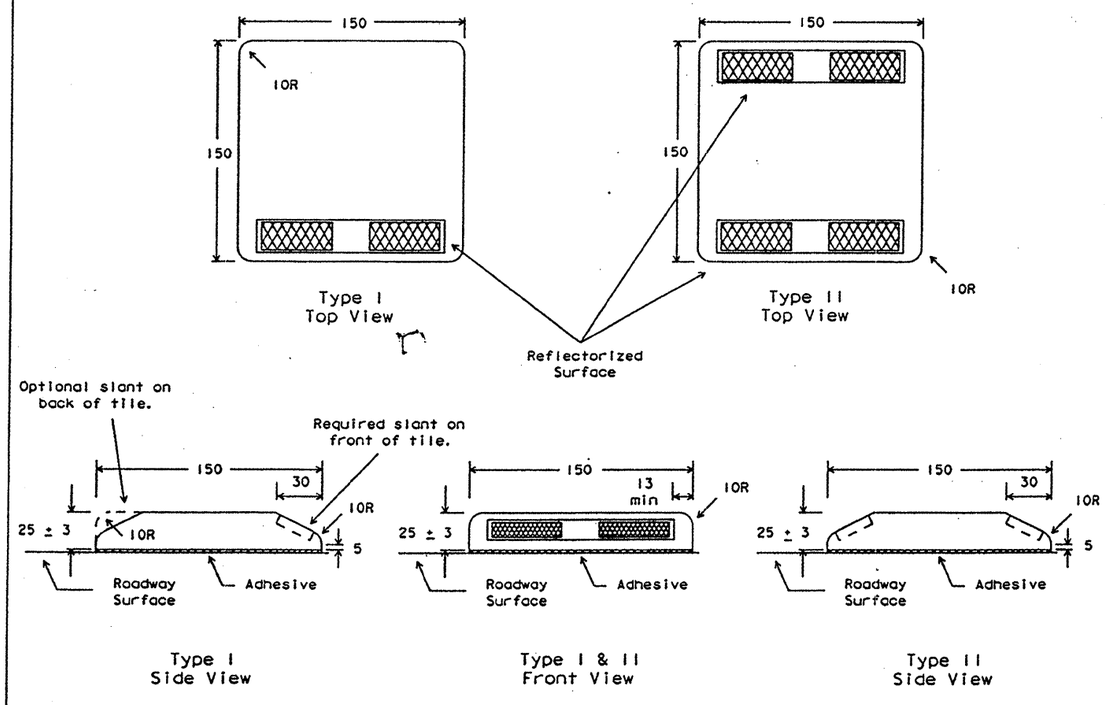

JIGGLE BAR TILES

(REFLECTORIZED)

SPECIFICATION REFERENCE TABLE	
MATERIALS AND TEST SPECIFICATIONS (D-9)	
JIGGLE BAR TILE	D-9-4100
PAVEMENT MARKERS (REFLECTORIZED)	D-9-4200
TRAFFIC BUTTONS	D-9-4300
BITUMINOUS ADHESIVE	D-9-6130

GENERAL NOTES:

RAISED PAVEMENT MARKERS (RPMs) MAY CONSIST OF TRAFFIC BUTTONS, PAVEMENT MARKERS AND/OR JIGGLE BAR TILES. PAVEMENT SURFACE SHALL BE PREPARED AND CLEANED SUBJECT TO APPROVAL OF THE ENGINEER BEFORE ADHESIVE AND RPMs ARE PLACED.

JIGGLE BARS SHALL BE ORIENTED PERPENDICULAR TO ROADWAY. JIGGLE BARS SHALL ALSO BE PLACED AT SUCH OTHER LOCATIONS AS SHOWN IN PLANS OR AS DIRECTED BY THE ENGINEER.

MARKERS, BUTTONS AND JIGGLE BAR TILES SHOWN ARE FOR ILLUSTRATION PURPOSES ONLY AND NOT INTENDED TO SPECIFY ANY PARTICULAR PRODUCT. ALL PAVEMENT MARKERS PROVIDED SHALL BE OF THE SAME MANUFACTURER.

All dimensions are ±3 mm unless otherwise noted.

All dimensions are in millimeters unless otherwise noted.

STANDARD PLANS
TEXAS DEPARTMENT OF TRANSPORTATION
Traffic Operations Division

RAISED PAVEMENT MARKERS REFLECTIVE PAVEMENT MARKERS, TRAFFIC BUTTONS & JIGGLE BAR TILE

RPM(1)-92(M)

ORIG. STAND. DATE: JANUARY 1981	DN: LR	CK:	DW: DN	CK:	REV. NO.:

REVISIONS	STATE DISTRICT	FEDERAL REGION	FEDERAL AID PROJECT	SHEET
2-82 10-86	15	6	CD2453-1-35	301
7-85 12-90	COUNTY		CONTROL SECTION JOB	HIGHWAY
11-85 4-92	BEXAR		2452 01 025	LP1669
7-86				

DISCLAIMER
The use of this standard is governed by the "Texas Engineering Practice Act". No warranty of any kind is made by TxDOT for any purpose whatsoever. TxDOT assumes no responsibility for the conversion of this standard to other formats or for incorrect results or damages resulting from its use.

LEVELS DISPLAYED 1 2 3 4 5 6 7 8 9 10 11 12 13 14 15 16 17 18 19 20 21 22 23 24 25 26 27 28 29 30 31 32 33 34 35 36 37 38 39 40 41 42 43 44 45 46 47 48 49 50 51 52 53 54 55 56 57 58 59 60 61 62 63

DATE: ACC: FILE:

DN: CK: DW: CK:

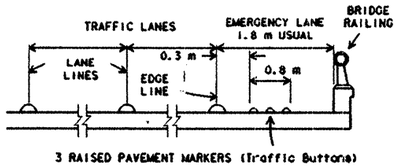

ON 1.8 m EMERGENCY LANE

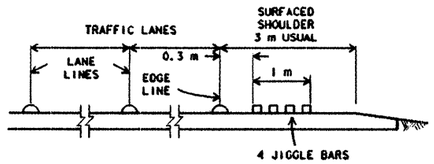

ON 3 m SURFACED SHOULDER

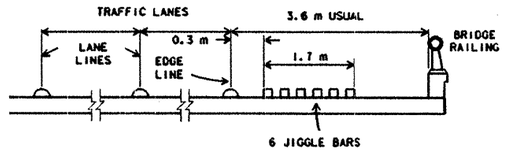

ON 3.6 m SURFACED SHOULDER

TYPICAL SECTIONS SHOWING JIGGLE BAR LOCATIONS

(RAISED PAVEMENT MARKING EDGE LINES NORMALLY USED ONLY WITH EMERGENCY LANES)

LANE LINES AND EDGE LINES MAY CONSIST OF VARIOUS MATERIALS AS CALLED FOR ELSEWHERE IN THE PLANS.

IF BICYCLES ARE PROHIBITED, JIGGLE BARS MAY EXTEND FULL WIDTH OF SHOULDERS.

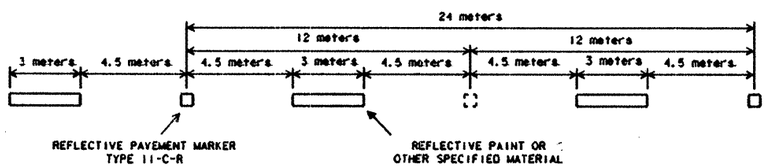

PAVEMENT MARKERS (REFLECTORIZED) TYPE II-C-R SHALL BE SPACED ON 24 METER CENTERS WITH THE CLEAR FACE TOWARD NORMAL TRAFFIC AND THE RED FACE TOWARD WRONG WAY TRAFFIC. SPACING MAY ALSO BE EITHER 12 OR 48 METER CENTERS WHEN SHOWN ELSEWHERE IN THE PLANS.

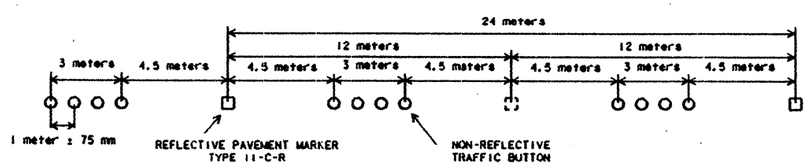

PAVEMENT MARKERS (REFLECTORIZED) TYPE II-C-R SHALL BE SPACED ON 24 METER CENTERS WITH THE CLEAR FACE TOWARD NORMAL TRAFFIC AND THE RED FACE TOWARD WRONG WAY TRAFFIC. SPACING MAY ALSO BE EITHER 12 OR 48 METER CENTERS WHEN SHOWN ELSEWHERE IN THE PLANS.

BUTTONS FOR LANE LINES MAY BE PLACED AT 1.5 METER SPACING IF SPECIFIED ELSEWHERE IN PLANS OR AS DIRECTED BY THE ENGINEER.

TRAFFIC LANE LINES PAVEMENT MARKING DETAILS

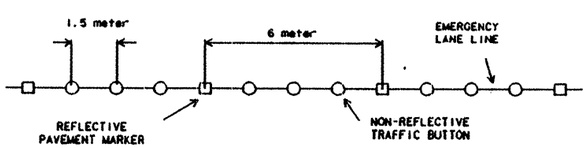

TRAFFIC BUTTONS FOR EMERGENCY LANE & SHOULDER EDGE LINES

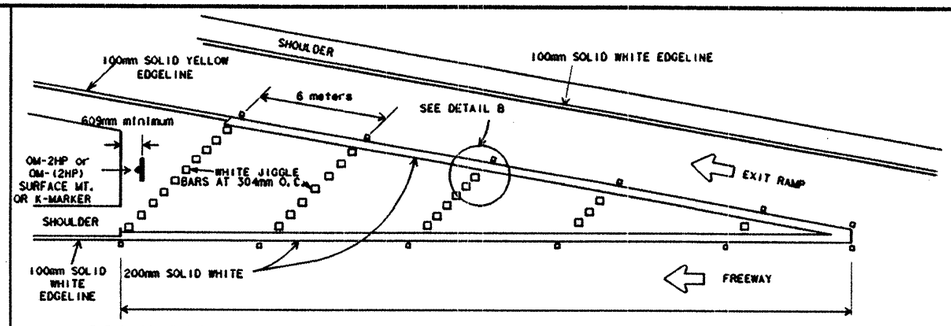

THE SHAPE OF THE GORE MARKING WILL VARY DEPENDING ON THE RAMP DESIGN AND WILL BE AS SHOWN IN THE PLANS. THE OM-2HP OR SURFACE MOUNT OBJECT MARKER MOUNTING HEIGHT IS .9 METER. THE SURFACE MOUNT MARKER MAY BE CARSONITE, "K-MARKER", SAFE-HIT OR EQUAL.

TYPICAL EXIT RAMP GORE MARKING

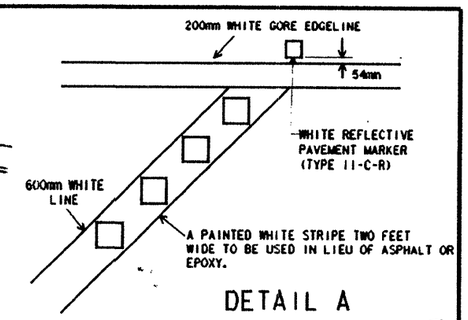

DETAIL A

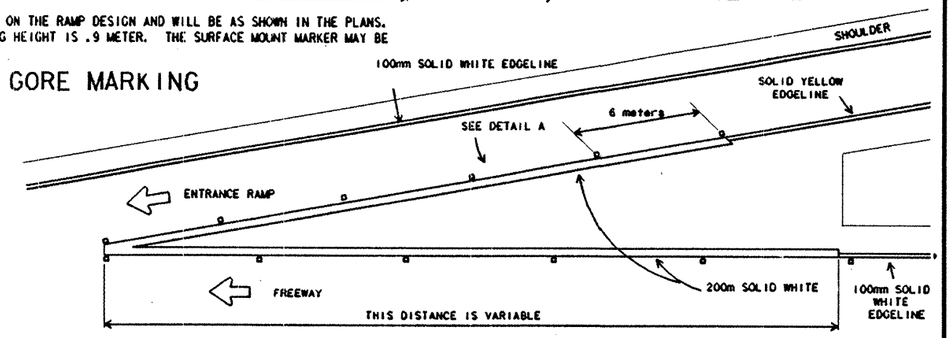

TYPICAL ENTRANCE RAMP GORE MARKING

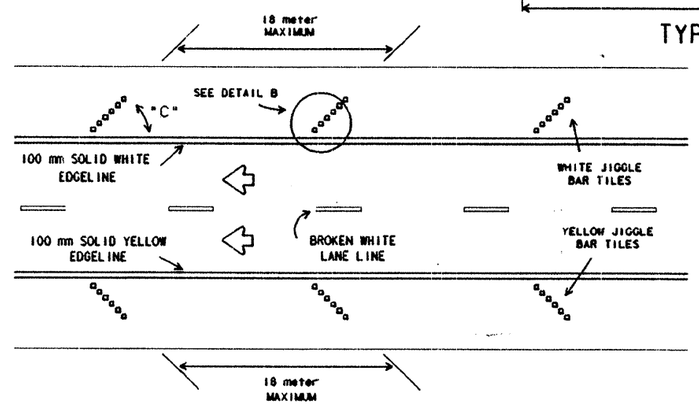

FOR TANGENT ROADWAYS, "C" ANGLE OF JIGGLE BAR TILE TO EDGE LINE IS USUALLY 45°. FOR EMERGENCY LANES, STRUCTURES AND RAMPS, "C" IS USUALLY 90°. "C" MAY BE SPECIFIED ELSEWHERE IN THE PLANS.

TYPICAL JIGGLE BAR TILE PLACEMENT

A RAISED ASPHALT OR EPOXY STRIPE, ONE FOOT WIDE, COVERED WITH REFLECTORIZED WHITE PAINT, MAY BE USED IN LIEU OF PAVEMENT MARKINGS WHEN SPECIFIED IN THE PLANS.

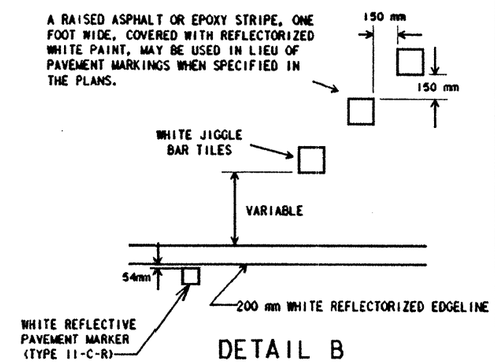

DETAIL B

All dimensions are in millimeters unless otherwise noted.

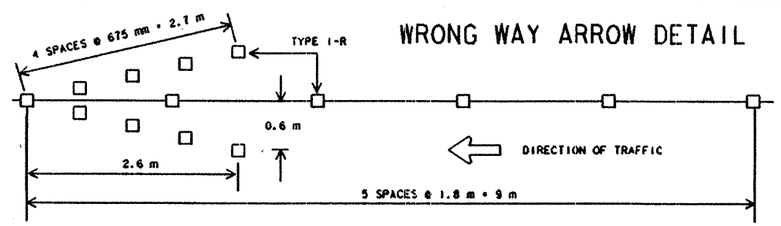

WRONG WAY ARROW DETAIL

ALL RAISED MARKERS IN THE WRONG WAY ARROW SHALL BE TYPE I-R REFLECTORIZED PAVEMENT MARKERS WITH THE REFLECTORIZED SURFACE FACING THE WRONG WAY TRAFFIC. TYPE II-C-R SHALL NOT BE USED.

REFLECTORIZED WRONG WAY ARROWS, NOT TO EXCEED TWO, SHOULD BE PLACED ON ALL EXIT RAMPS WITHIN THE LIMITS OF THE PROJECT. LOCATION OF THE ARROWS SHALL BE AS SHOWN IN THE PLANS OR AS DIRECTED BY THE ENGINEER.

12/95

STANDARD PLANS
TEXAS DEPARTMENT OF TRANSPORTATION
Traffic Operations Division

TYPICAL STANDARD FREEWAY PAVEMENT MARKINGS WITH RAISED PAVEMENT MARKERS FPM(1)(M) SAN ANTONIO DISTRICT

ORIG. DRAW DATE: May 1974	DN: LR	CK: -	DW: DN	CK: -	NEG NO.:
REVISIONS 7-86 2-90 4-92 0-95	DISTRICT SAT	FEDERAL REGION 6	PROJECT NO. CD2452-01-035		SHEET # 3022
	COUNTY BEXAR		CONTROL 2452-01-035	SECTION	JOB CD 1604

Metric 23A

DISCLAIMER
The use of this standard is governed by the "Texas Engi... ing Practice Act". No warranty of any kind is made by TxDOT for any purpose whatsoever. TxDOT assumes no responsibility for the conversion of this standard to other formats or for incorrect results or damages resulting from its use.

DN: LR CK: CW DW: DN CK: MT

DATE: FILE: ACC: d58r asr/d580504

LEVELS DISPLAYED

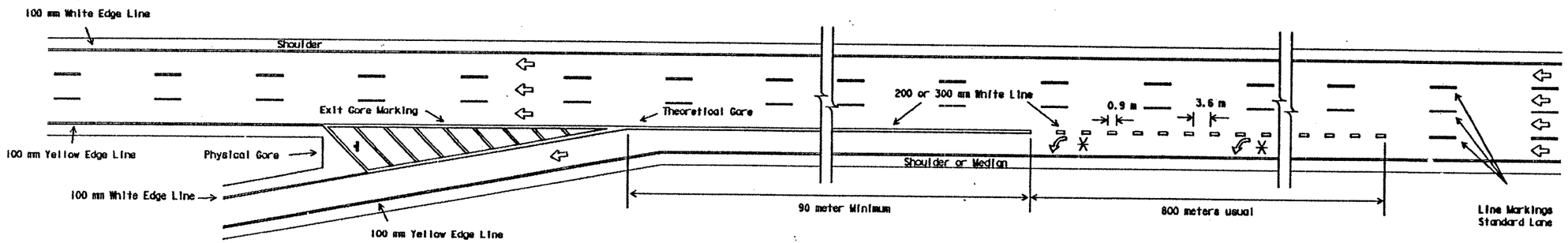

SINGLE LANE EXIT - LANE DROP OR EXIT ONLY (LEFTHAND)

ARROW DETAILS

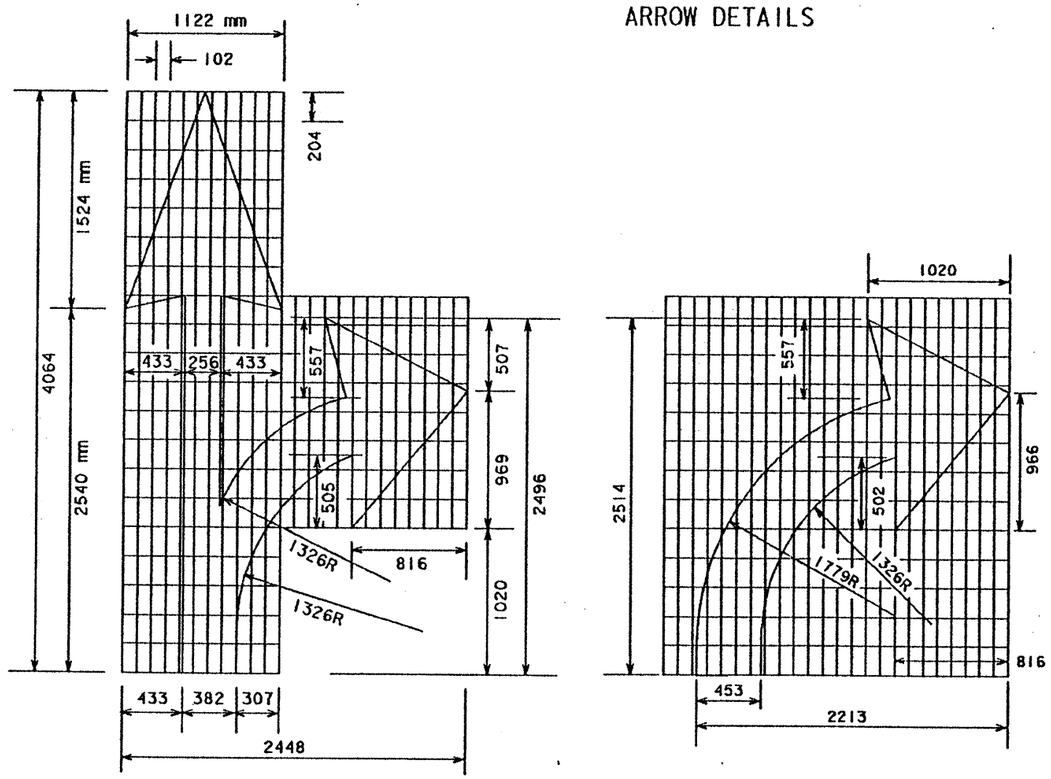

LANE DROP PAVEMENT MARKING DETAILS

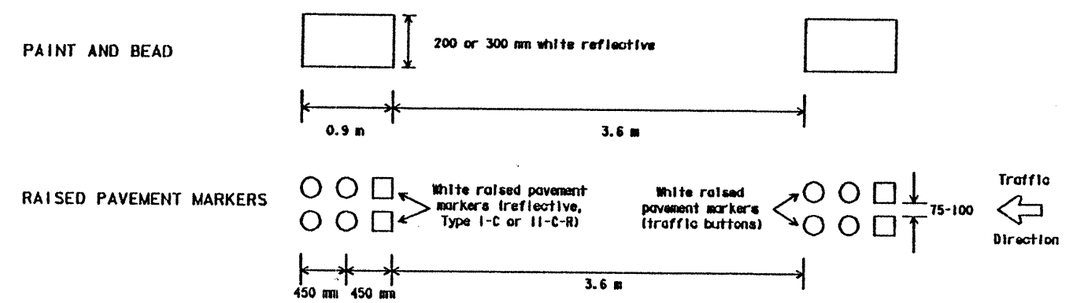

LEGEND

- OM-2HR, OM-2HP or surface mount object marker (K-Marker) installed 0.6 to 3 meter from Physical Gore. Mounting height is approximately 450 mm. K-Marker may be Carsonite, Safe-Hit or equal.
- Denotes direction of traffic.
- Pavement marking arrows (white).
- Optional

NOTES:

1. Pavement markings shall be white except as otherwise noted.
2. Pavement marking arrows to be located as specified elsewhere in the plans.
3. Length of 200-300 mm white line may vary depending on location.
4. Lane drop markings are to be used to separate lanes that are required to go in different directions.
5. A lane drop (EXIT ONLY) condition is typically when the nearest entrance ramp is greater than 600 meters upstream of the exit ramp, measured from theoretical gore of entrance ramp to theoretical gore of exit ramp.

All dimensions are in millimeters unless otherwise noted.

STANDARD PLANS
TEXAS DEPARTMENT OF TRANSPORTATION
Traffic Operations Division

TYPICAL STANDARD FREEWAY PAVEMENT MARKINGS LANE DROP (EXIT ONLY) DETAILS

FPM(4)-92(M)

April 1992	LR		DN		
15	6	CD2452-1-35			303
BEXAR		2452	01	035	

DISCLAIMER
The use of this standard is governed by the "Texas Engineering Practice Act". No warranty of any kind is made by TxDOT for any purpose whatsoever. TxDOT assumes no responsibility for the conversion of this standard to other formats or for incorrect results or damages resulting from its use.

LEVELS DIS...
DATE:
ACC: d58hpl...er/d580504
FILE:
DN: LR
CK: CW
DW: DN
CK: MT

DISCLAIMER
The use of this standard is governed by the "Texas Engineer Practice Act". No warranty of any kind is made by TxDOT for any purpose whatsoever. TxDOT does not be responsibility for the conversion of this standard to other formats or for incorrect results or damages resulting from its use.

TWO LANE TWO-WAY ROADWAY

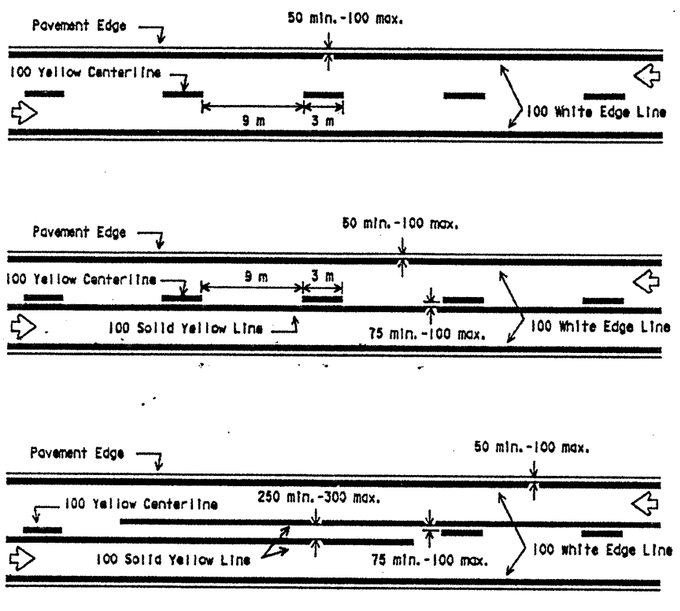

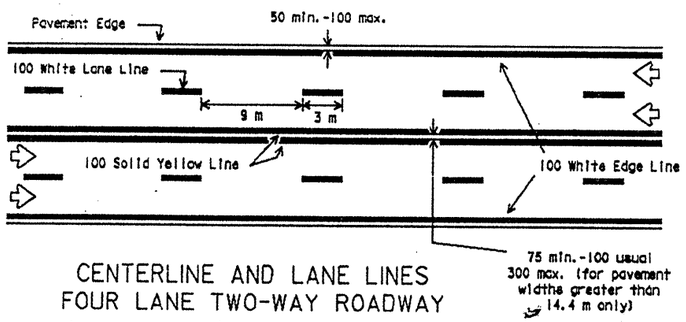

CENTERLINE AND LANE LINES
FOUR LANE TWO-WAY ROADWAY

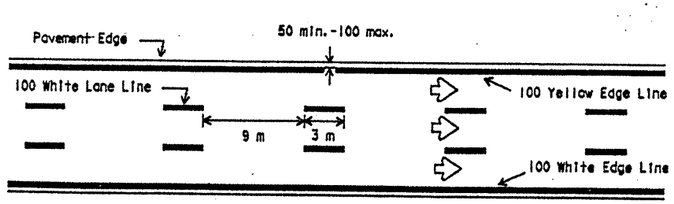

EDGE LINE AND LANE LINES
ONE-WAY ROADWAY

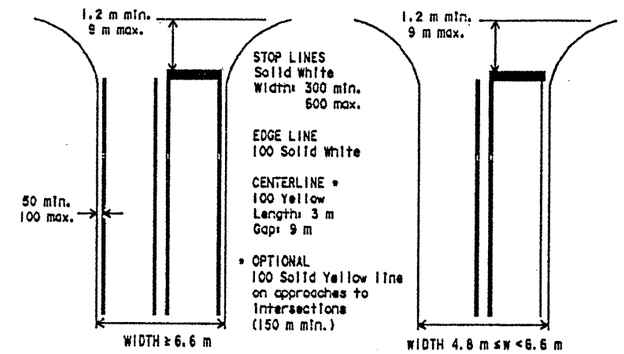

GUIDE FOR PLACEMENT OF STOP LINES,
EDGE LINE & CENTERLINE

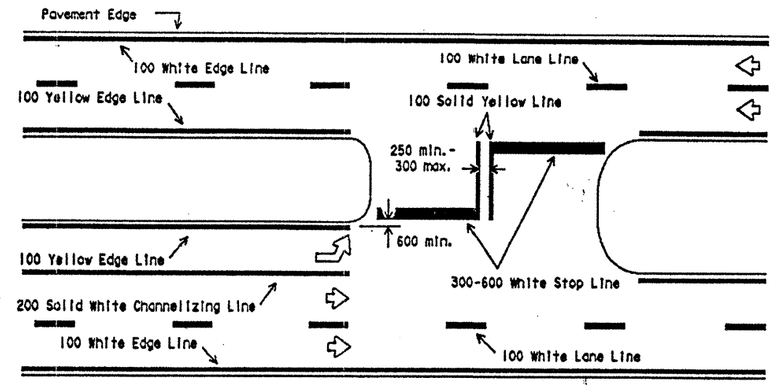

FOUR LANE DIVIDED ROADWAY INTERSECTIONS
MEDIAN WIDTH GREATER THAN 9.14 METERS
(median width measured between crossover stop lines)

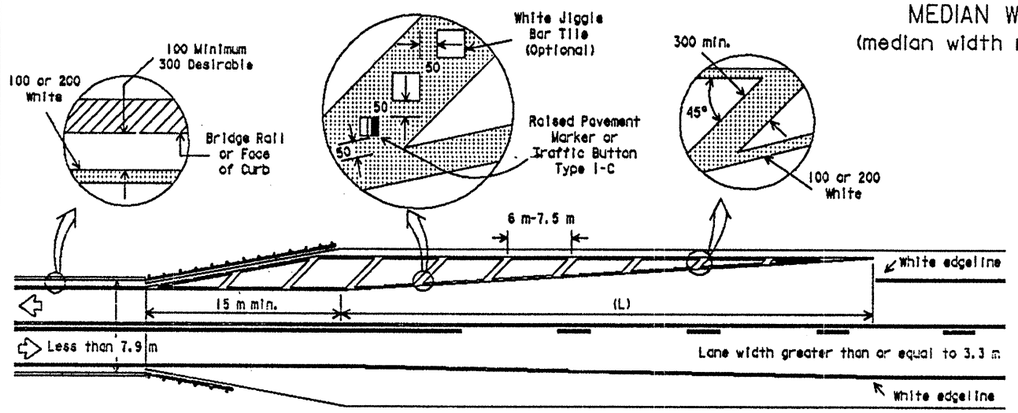

NOTES:

1. No-passing zone on bridge approach is optional but if used, it shall be a minimum 150 m long.
2. 300 mm crosshatching is optional. See plan quantities.
3. For taper length (L) see Table I.

NARROW BRIDGES (less than 7.9 m)
TWO LANE TWO-WAY ROADWAY

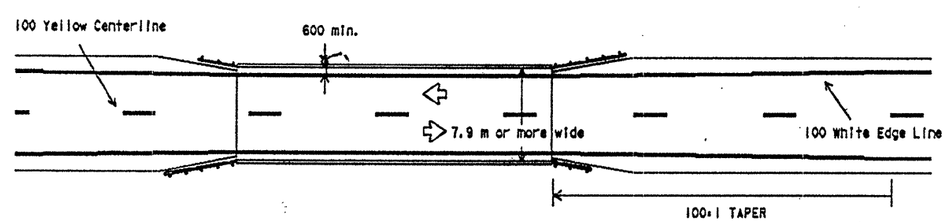

BRIDGES (7.9 m or greater in width)
TWO LANE TWO-WAY ROADWAY

TABLE I
TYPICAL TRANSITION LENGTHS
(METERS)

Posted Speed *	Formula	Minimum Desirable Taper Lengths ** 3.0 m Offset	3.3 m Offset	3.6 m Offset
30	$L = \frac{WS^2}{60}$	45	50	55
35		65	70	75
40		80	90	100
45	L=WS	135	150	165
50		150	165	180
55		165	185	200
60		180	200	220
65		195	215	235

* 85th Percentile Speed may be used on roads where traffic speeds normally exceed the posted speed limit. (MPH)
** Taper lengths have been rounded.

All dimensions are in millimeters unless otherwise noted.

STANDARD PLANS
TEXAS DEPARTMENT OF TRANSPORTATION
Traffic Operations Division

TYPICAL STANDARD PAVEMENT MARKINGS

PM(1)-95A(M)

FILE NO.	DGN	CK	DW	CK	DN	CK	MD	MD NO.

FILE DRAWN DATE	REVISIONS	STATE	DISTRICT	FEDERAL AID PROJECT	SHEET
NOV. 1978	2-82 7-92	15	6	CL2452-1-35	304
DN-LR	11-85 8-95				
CK-	7-86 1-96				

DISCLAIMER
The use of this standard is governed by the "Texas Engi... ng Practice Act". No warran... of any kind is made by TxDOT for any purpose whatsoever. TxDOT assumes no responsibility for the conversion of this standard to other formats or for incorrect results or damages resulting from its use.

ACC: d58npio/usr/d580504
FILE:
DW: DN
CK: NT

Raised pavement markers supplement painted lines

CENTERLINE & NO-PASSING LINES FOR TWO LANE TWO-WAY HIGHWAYS

Raised pavement markers as vehicle positioning guides

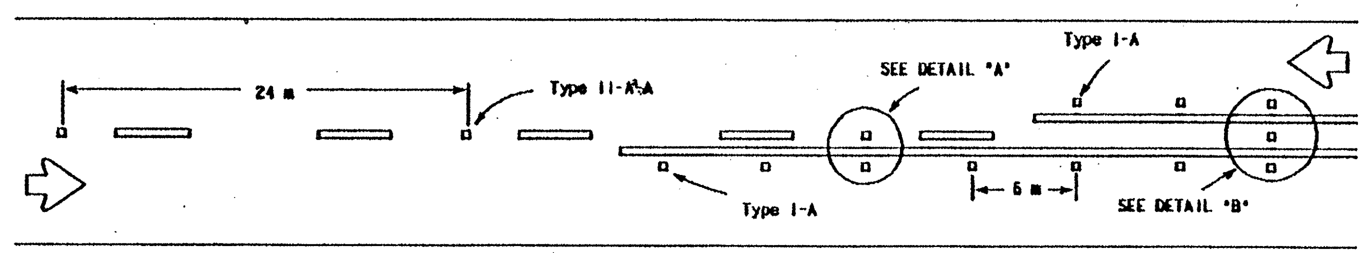

(FOR ROADWAYS 7.2 m OR WIDER)

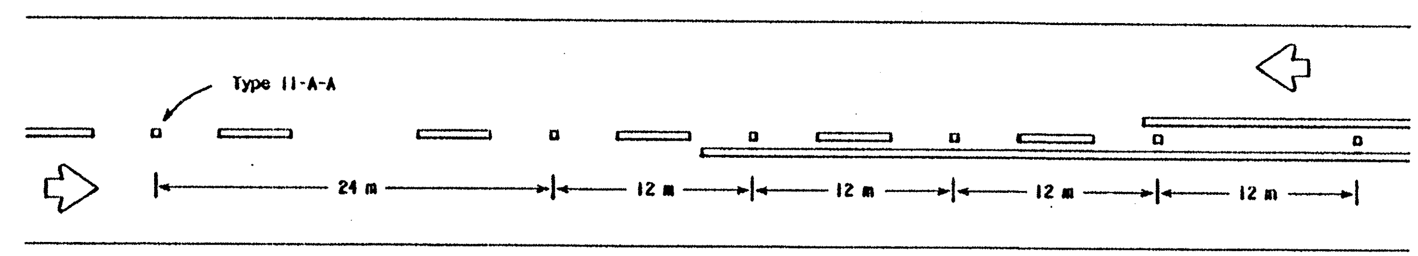

(FOR ALL ROADWAYS)

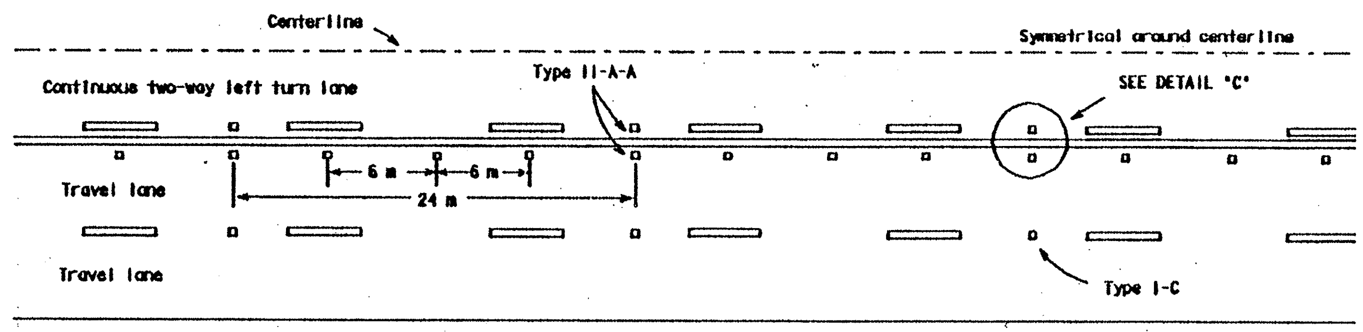

TWO-WAY LEFT TURN LANE

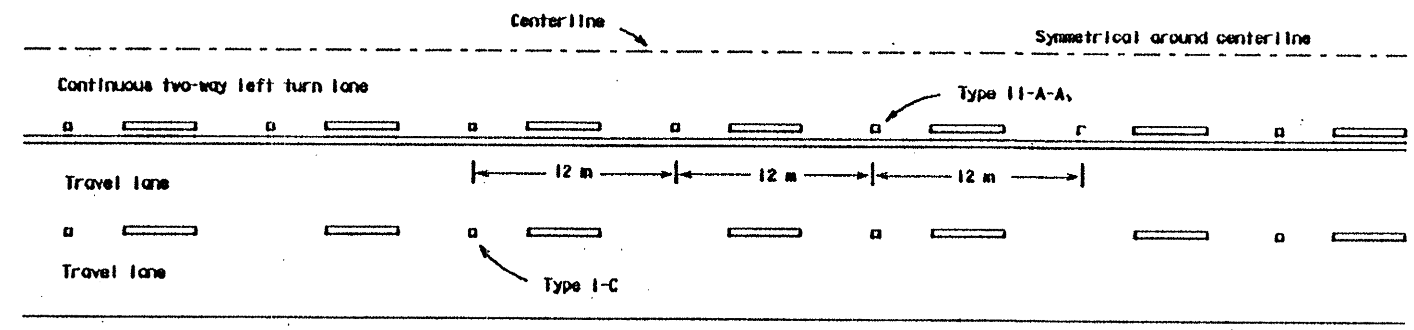

TWO-WAY LEFT TURN LANE

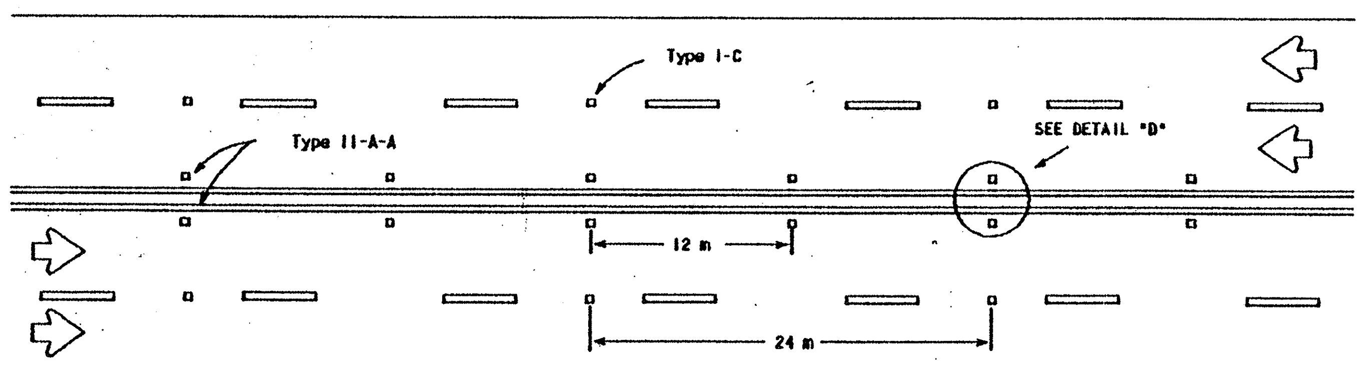

CENTERLINE & LANE LINES FOR FOUR LANE TWO-WAY HIGHWAYS

Raised pavement marker Type I-C, clear face toward normal traffic, shall be placed on 24 m centers.

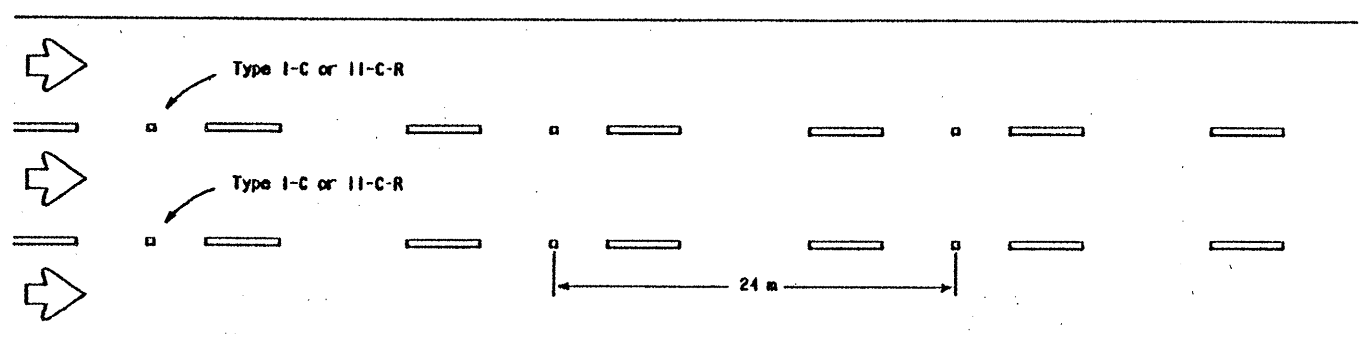

LANE LINES FOR ONE-WAY ROADWAY

Raised pavement markers Type II-C-R, clear face toward normal traffic and red face toward wrong-way traffic, shall be spaced on 24 m centers.

As required by the Engineer or shown elsewhere in the plans, Type II-C-R markers shall be placed on 12 m centers for the below listed conditions:

1. Vertical curves with grades over 2 percent and less than 300 m long,
2. horizontal curves,
3. or continously illuminated sections.

DETAIL "A"

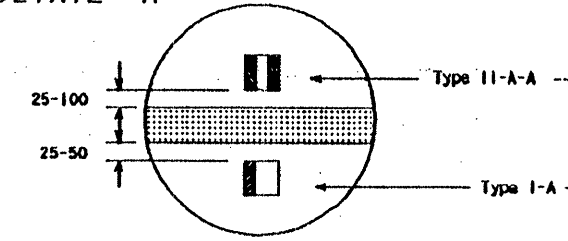

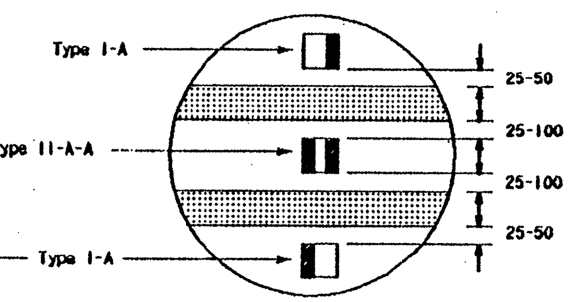

DETAIL "B"

DETAIL "C" DETAIL "D"

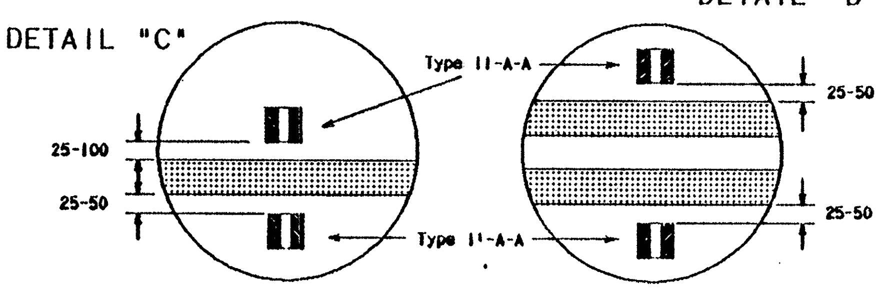

GENERAL NOTES:

All raised pavement markers placed in broken lines shall be placed in line with and midway between the stripes.

First and last raised pavement markers in a no-passing line are to be located adjacent to either the midpoint of the gap of the centerline marking or the midpoint of the broken line of the centerline marking.

On concrete pavements the raised pavement markers should be placed to one side of the longitudinal joints.

All dimensions are in millimeters unless otherwise noted.

STANDARD PLANS
TEXAS DEPARTMENT OF TRANSPORTATION
Traffic Operations Division

TYPICAL STANDARD PAVEMENT MARKINGS WITH RAISED PAVEMENT MARKERS

PM(2)-95(M)

APRIL 1977	LR		DN			
REVISIONS	STATE DISTRICT	FEDERAL REGION	FEDERAL AID PROJECT			SHEET
2-82 4-92	15	6	CD2452-1-35			305
11-85 10-95	COUNTY		CONT.	SECT.	JOB	HIGHWAY
7-86 10-86	BEXAR		2452	01	035	LP 1604

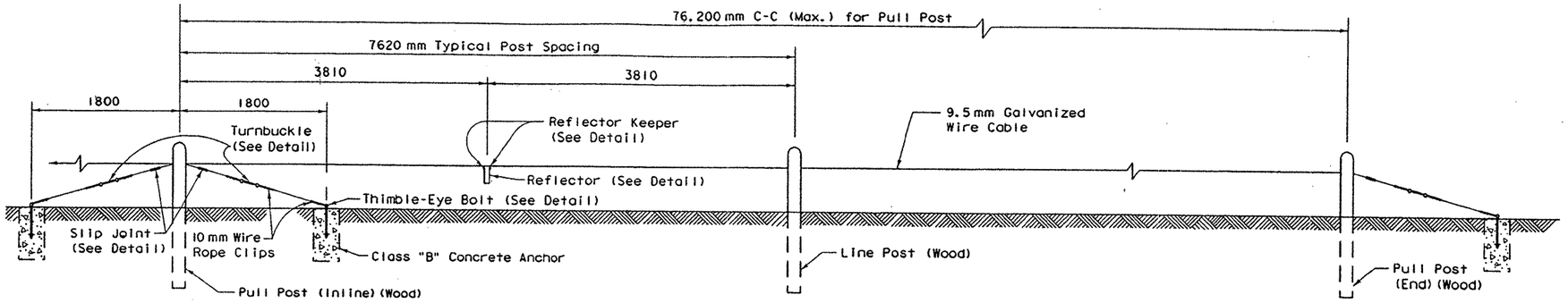

WOOD POST & CABLE UNIT

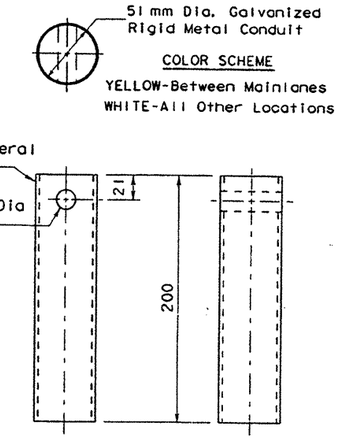

REFLECTOR DETAIL

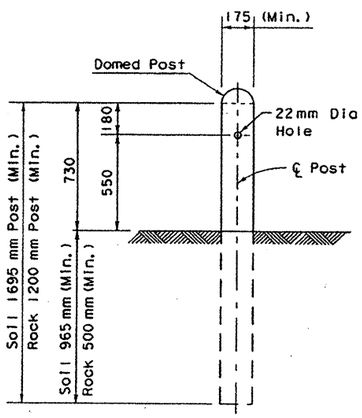

WOOD POST DETAIL

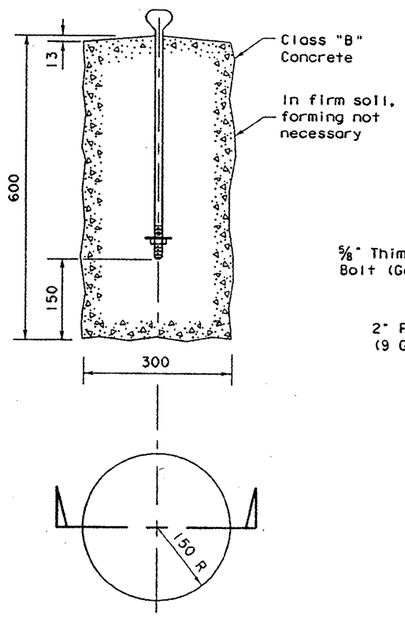

CONCRETE ANCHOR DETAILS

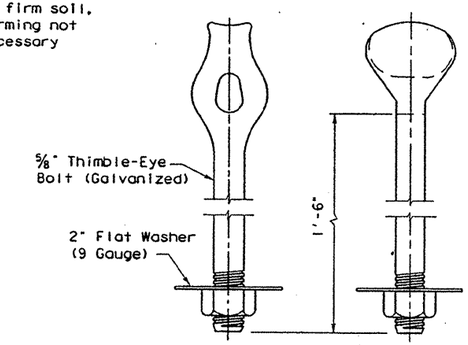

THIMBLE-EYE BOLT DETAILS

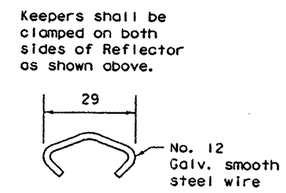

REFLECTOR KEEPER DETAIL

GENERAL NOTES

1. All concrete shall be Class "A", "B" or "C" concrete in accordance with Item, "Concrete for Structures", or concrete in accordance with Item, "Concrete Pavement". Concrete anchors shall cure at least five (5) days before the cable is placed.
2. All cable fittings shall be hot-dip galvanized in accordance with A.S.T.M. designation A153.
3. All posts shall conform to "Timber Post" as described in the Item "Metal Beam Guard Fence". Timber Posts shall not be painted.
4. Entire surface of reflector shall be covered with a reflectorized sheeting material conforming to Departmental Specification D-9-8300 "Flat Surface Reflective Sheeting", Type D.
5. Cable shall conform to A.S.T.M. designation A475.

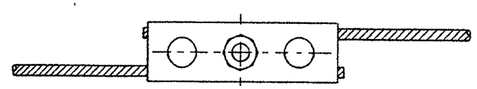

TOP VIEW

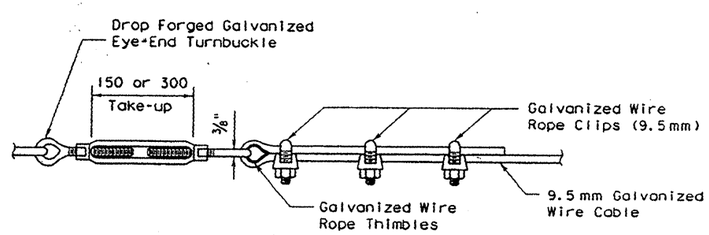

WIRE CABLE CONNECTION (at turnbuckles & eyebolts) DETAIL

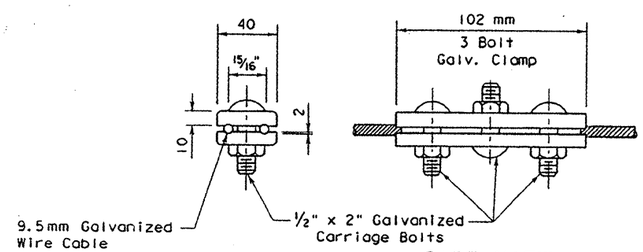

SIDE VIEW

SLIP JOINT DETAIL

R = Radius
D = Diameter
All unit-less dimensions are millimeters

Texas Department of Transportation
Design Division (Roadway)

POST & CABLE FENCE

PCF-97(M)

FILE: pcf97m.dgn	DN:	CK:	DW: RAR	CK: MAM	NEG:	
ORIG DATE: MAY 1997	DIST	FED REG	PROJECT			SHEET
REVISIONS	15	6	CD2452-1-35			306
	COUNTY		CONTROL	SECT	JOB	HIGHWAY
	BEXAR		2452	01	035	1604

DISCLAIMER:
The use of this standard is governed by the "Texas Engineering Practice Act". No warranty of any kind is made by TxDOT for any purpose whatsoever. TxDOT assumes no responsibility for the conversion of this standard to other formats or for incorrect results or damages resulting from its use.

LEVELS DISPLAYED

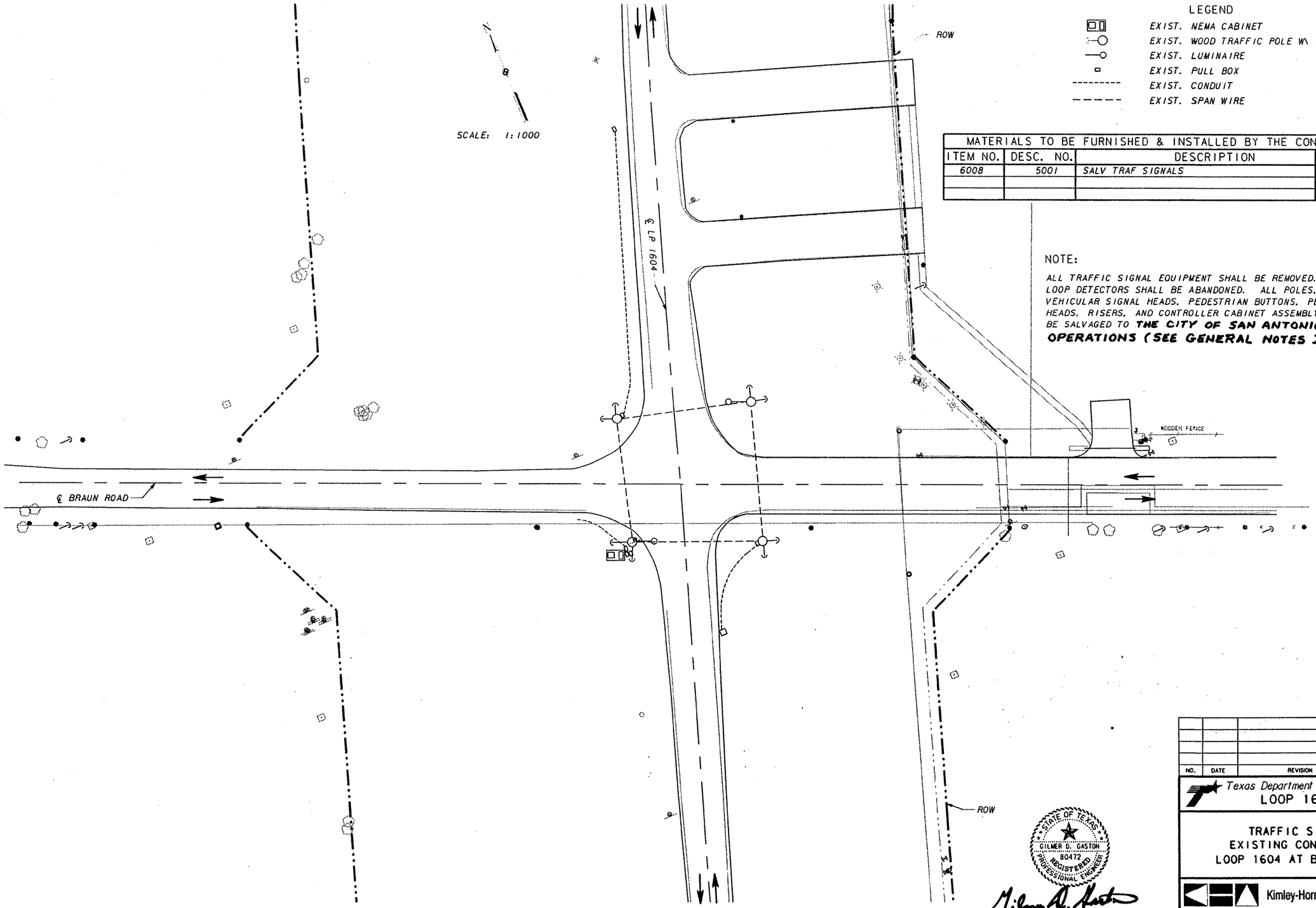

LEGEND

- EXIST. NEMA CABINET
- EXIST. WOOD TRAFFIC POLE W\ GUY WIRE
- EXIST. LUMINAIRE
- EXIST. PULL BOX
- EXIST. CONDUIT
- EXIST. SPAN WIRE

MATERIALS TO BE FURNISHED & INSTALLED BY THE CONTRACTOR				
ITEM NO.	DESC. NO.	DESCRIPTION	UNIT	QTY.
6008	5001	SALV TRAF SIGNALS	EA	1

NOTE:

ALL TRAFFIC SIGNAL EQUIPMENT SHALL BE REMOVED. EXISTING LOOP DETECTORS SHALL BE ABANDONED. ALL POLES, CABLE, WIRE, VEHICULAR SIGNAL HEADS, PEDESTRIAN BUTTONS, PEDESTRIAN HEADS, RISERS, AND CONTROLLER CABINET ASSEMBLY, SHALL BE SALVAGED TO **THE CITY OF SAN ANTONIO TRAFFIC OPERATIONS (SEE GENERAL NOTES ITEM 6008).**

STATE OF TEXAS
GILMER D. GASTON
80472
REGISTERED
PROFESSIONAL ENGINEER

Gilmer D. Gaston
5/6/97

NO.	DATE	REVISION	APPROV.

Texas Department of Transportation
LOOP 1604

TRAFFIC SIGNAL
EXISTING CONDITIONS
LOOP 1604 AT BRAUN ROAD

Kimley-Horn and Associates, Inc.

Designed	HP	DIST	FED REG	FEDERAL AID PROJECT				HIGHWAY
Checked	JJ	15	6					LP1604
Drawn	HP	COUNTY			CONTROL	SECT	JOB	SHEET
Checked	GDG	BEXAR			2452	01	035	307

LEVELS DISPLAYED

1	2	3	4	5	6	7	8	9	10	11	12	13	14	15	16	
17	18	19	20	21	22	23	24	25	26	27	28	29	30	31	32	
33	34	35	36	37	38	39	40	41	42	43	44	45	46	47	48	
49	50	51	52	53	54	55	56	57	58	59	60	61	62	63		

H:\DRAWINGS\673160 3\SIGNALS\XBRAUN.DGN

LEGEND

- PROP. CONTROLLER FOUNDATION AND SLAB
- PROP. MAST ARM POLE AND FOUNDATION
- PROP. PEDESTAL POLE AND FOUNDATION
- PROP. SIGNAL FACE
- PROP. PEDESTRIAN SIGNAL, PUSH BUTTON, AND SIGN
- PROP. SCH 80 PVC CONDUIT (SEE CONDUIT AND CABLE SCHEDULE FOR CONDUIT SIZE)
- PROP. POWER SERVICE POLE
- PROP. LOOP DETECTOR
- PROP. TYPE 'A' GROUND BOX
- PROP. TYPE 'D' GROUND BOX

SIGNAL FACES

SIGNAL NO. 1 — SIGNAL NO. 2 — SIGNAL NO. 3

SCALE: 1:500

NOTES:

1. THE CONTRACTOR SHALL CONTACT THE CITY OF SAN ANTONIO TRAFFIC OPERATIONS ENGINEER AT (210) 207-7720 96 HOURS PRIOR TO CONSTRUCTION. PRIOR TO PICKING UP CITY FURNISHED MATERIALS, AND PRIOR TO SIGNAL TURN ON. ALL CITY FURNISHED EQUIPMENT MAY BE PICKED UP FROM THE TRAFFIC OPERATIONS SHOP LOCATED AT 223 SOUTH CHERRY STREET.
2. ALL DIMENSIONS SHOWN ARE IN METERS UNLESS SPECIFIED OTHERWISE.
3. PROPOSED LOOP DETECTORS SHALL BE INSTALLED PRIOR TO THE FINAL ASPHALT MAT.
4. ALL PVC SHALL BE SCHEDULE 80 UNLESS SPECIFIED OTHERWISE.
5. PROPOSED LOOP DETECTOR PLACEMENTS ARE EXAGERATED TO SHOW OVERALL LOOP LAYOUT.
6. ALL SIGNAL FOUNDATIONS SHALL BE INSTALLED ACCORDING TO TS-FD STANDARD SHEET.
7. INSTALLATION OF SIGNS TO BE CONSIDERED SUBSIDIARY TO BID ITEM 680.
8. SEE SHEET 184 FOR INTERSECTION DETAILS

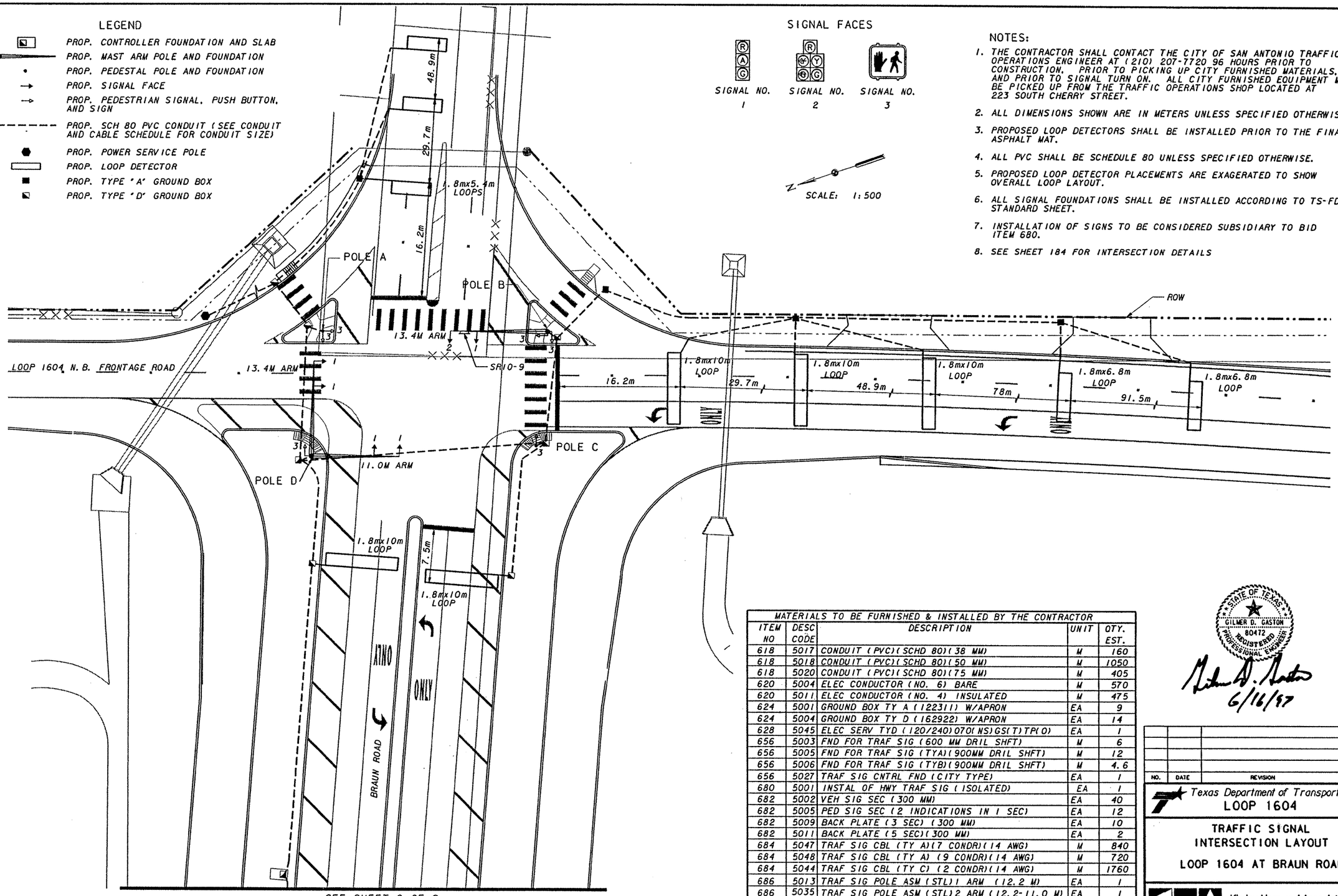

MATERIALS TO BE FURNISHED & INSTALLED BY THE CONTRACTOR				
ITEM NO	DESC CODE	DESCRIPTION	UNIT	QTY. EST.
618	5017	CONDUIT (PVC)(SCHD 80)(38 MM)	M	160
618	5018	CONDUIT (PVC)(SCHD 80)(50 MM)	M	1050
618	5020	CONDUIT (PVC)(SCHD 80)(75 MM)	M	405
620	5004	ELEC CONDUCTOR (NO. 6) BARE	M	570
620	5011	ELEC CONDUCTOR (NO. 4) INSULATED	M	475
624	5001	GROUND BOX TY A (122311) W/APRON	EA	9
624	5004	GROUND BOX TY D (162922) W/APRON	EA	14
628	5045	ELEC SERV TYD (120/240)070(NS)GS(T)TP(O)	EA	1
656	5003	FND FOR TRAF SIG (600 MM DRIL SHFT)	M	6
656	5005	FND FOR TRAF SIG (TYA)(900MM DRIL SHFT)	M	12
656	5006	FND FOR TRAF SIG (TYB)(900MM DRIL SHFT)	M	4.6
656	5027	TRAF SIG CNTRL FND (CITY TYPE)	EA	1
680	5001	INSTAL OF HWY TRAF SIG (ISOLATED)	EA	1
682	5002	VEH SIG SEC (300 MM)	EA	40
682	5005	PED SIG SEC (2 INDICATIONS IN 1 SEC)	EA	12
682	5009	BACK PLATE (3 SEC) (300 MM)	EA	10
682	5011	BACK PLATE (5 SEC)(300 MM)	EA	2
684	5047	TRAF SIG CBL (TY A)(7 CONDR)(14 AWG)	M	840
684	5048	TRAF SIG CBL (TY A) (9 CONDR)(14 AWG)	M	720
684	5044	TRAF SIG CBL (TY C) (2 CONDR)(14 AWG)	M	1760
686	5013	TRAF SIG POLE ASM (STL)1 ARM (12.2 M)	EA	1
686	5035	TRAF SIG POLE ASM (STL)2 ARM (12.2-11.0 M)	EA	1
686	5040	TRAF SIG POLE ASM (STL)2 ARM (13.4-11.0 M)	EA	1
686	5014	TRAF SIG POLE ASM (STL)1 ARM (13.4 M)	EA	1
688	5001	PED DETECT (PUSH BTN)	EA	12
688	5011	VEH DETECT (14 AWG)(SAWCUT LOOPS)	M	432
6006	5001	PEDESTAL POLE ASSEM	EA	4

STATE OF TEXAS — GILMER D. GASTON — 80472 — REGISTERED PROFESSIONAL ENGINEER

6/16/97

NO.	DATE	REVISION	APPROV.

Texas Department of Transportation
LOOP 1604

TRAFFIC SIGNAL
INTERSECTION LAYOUT

LOOP 1604 AT BRAUN ROAD

1 OF 2

Kimley-Horn and Associates, Inc.

Designed	HP	DIST	FED REG	FEDERAL AID PROJECT			HIGHWAY
Checked	JJ	15	6				LP1604
Drawn	HP	COUNTY		CONTROL	SECT	JOB	SHEET
Checked	GDG	BEXAR		2452	01	035	308

LEVELS DISPLAYED

1	2	3	4	5	6	7	8	9	10	11	12	13	14	15	16	
17	18	19	20	21	22	23	24	25	26	27	28	29	30	31	32	
33	34	35	36	37	38	39	40	41	42	43	44	45	46	47	48	
49	50	51	52	53	54	55	56	57	58	59	60	61	62	63		

\DRAWINGS\673160 3\SIGNALS\BRAUS1G1.DGN

NOTES:

1. THE CONTRACTOR SHALL CONTACT THE CITY OF SAN ANTONIO TRAFFIC OPERATIONS ENGINEER AT (210) 207-7720 96 HOURS PRIOR TO CONSTRUCTION. PRIOR TO PICKING UP CITY FURNISHED MATERIALS, AND PRIOR TO SIGNAL TURN ON. ALL CITY FURNISHED EQUIPMENT MAY BE PICKED UP FROM THE TRAFFIC OPERATIONS SHOP LOCATED AT 223 SOUTH CHERRY STREET.
2. ALL DIMENSIONS SHOWN ARE IN METERS UNLESS SPECIFIED OTHERWISE.
3. PROPOSED LOOP DETECTORS SHALL BE INSTALLED PRIOR TO THE FINAL ASPHALT MAT.
4. ALL PVC SHALL BE SCHEDULE 80 UNLESS SPECIFIED OTHERWISE.
5. PROPOSED LOOP DETECTOR PLACEMENTS ARE EXAGERATED TO SHOW OVERALL LOOP LAYOUT.
6. ALL SIGNAL FOUNDATIONS SHALL BE INSTALLED ACCORDING TO TS-FD STANDARD SHEET.
7. INSTALLATION OF SIGNS TO BE CONSIDERED SUBSIDIARY TO BID ITEM 680.
8. SEE SHEET 184 FOR INTERSECTION DETAILS

SIGNAL FACES

SIGNAL NO. 1 — SIGNAL NO. 2 — SIGNAL NO. 3

SCALE: 1:500

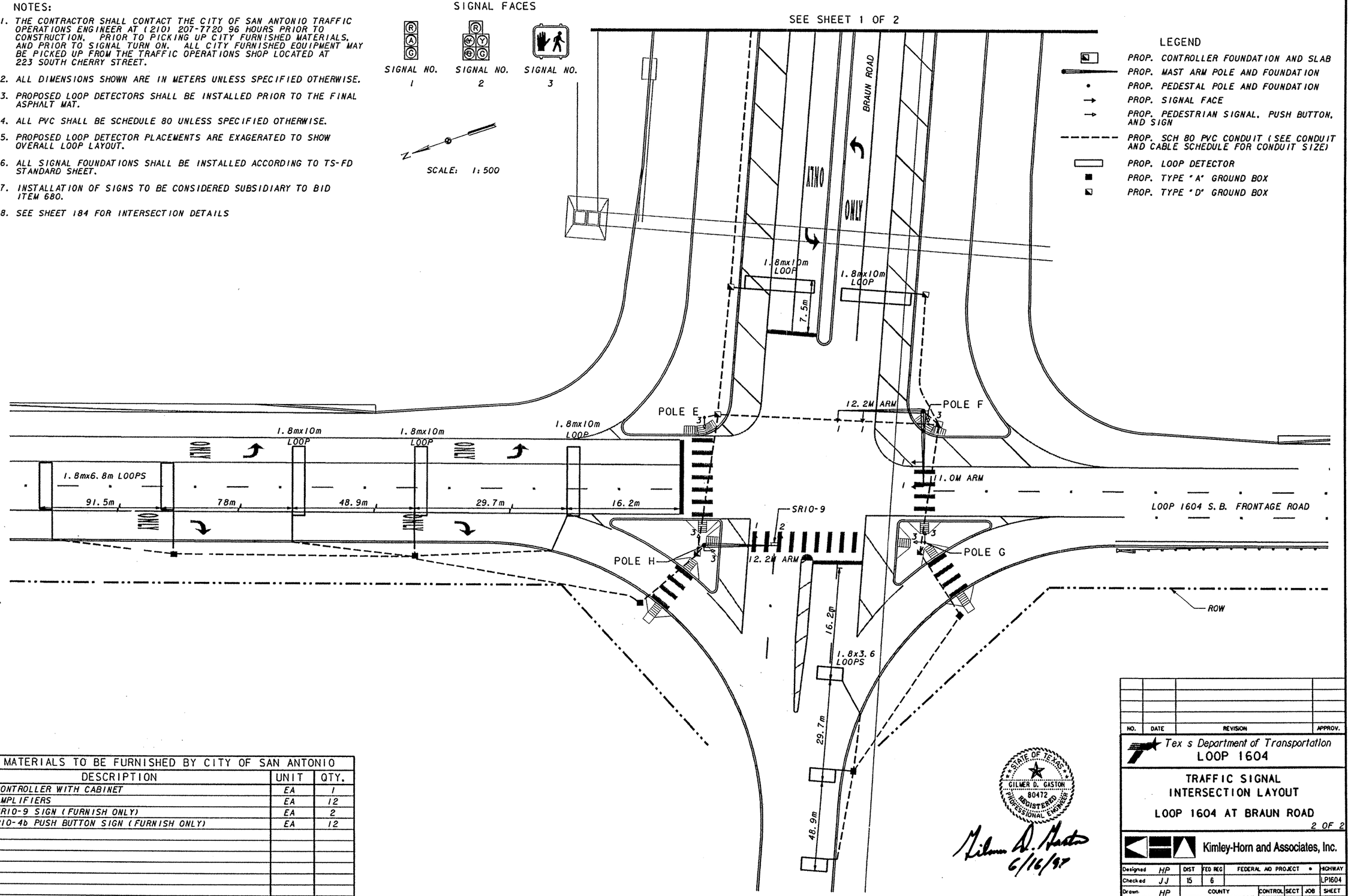

LEGEND

- PROP. CONTROLLER FOUNDATION AND SLAB
- PROP. MAST ARM POLE AND FOUNDATION
- PROP. PEDESTAL POLE AND FOUNDATION
- PROP. SIGNAL FACE
- PROP. PEDESTRIAN SIGNAL, PUSH BUTTON, AND SIGN
- PROP. SCH 80 PVC CONDUIT (SEE CONDUIT AND CABLE SCHEDULE FOR CONDUIT SIZE)
- PROP. LOOP DETECTOR
- PROP. TYPE "A" GROUND BOX
- PROP. TYPE "D" GROUND BOX

MATERIALS TO BE FURNISHED BY CITY OF SAN ANTONIO

DESCRIPTION	UNIT	QTY.
CONTROLLER WITH CABINET	EA	1
AMPLIFIERS	EA	12
SR10-9 SIGN (FURNISH ONLY)	EA	2
R10-4b PUSH BUTTON SIGN (FURNISH ONLY)	EA	12

LEVELS DISPLAYED	
1 2 3 4 5 6 7 8 9 10 11 12 13 14 15 16	
17 18 19 20 21 22 23 24 25 26 27 28 29 30 31 32	
33 34 35 36 37 38 39 40 41 42 43 44 45 46 47 48	
49 50 51 52 53 54 55 56 57 58 59 60 61 62 63	

H:\DRAWINGS\673160 3\SIGNALS\BRAUS162.DGN

STATE OF TEXAS — GILMER D. GASTON — 80472 — REGISTERED PROFESSIONAL ENGINEER

Gilmer D. Gaston 6/16/97

NO.	DATE	REVISION	APPROV.

Tex s Department of Transportation
LOOP 1604

TRAFFIC SIGNAL
INTERSECTION LAYOUT

LOOP 1604 AT BRAUN ROAD

2 OF 2

Kimley-Horn and Associates, Inc.

Designed	HP	DIST	FED REG	FEDERAL AID PROJECT •				HIGHWAY
Checked	JJ	15	6					LP1604
Drawn	HP	COUNTY		CONTROL	SECT	JOB		SHEET
Checked	GDG	BEXAR		2452	01	035		309

CONDUIT AND CABLE SCHEDULE

RUN/ POLE NO.	CONDUIT NO. - SIZE (mm)	CONDUIT LENGTH (m)	SIGNAL CABLE 9/C#14	7/C#14	2/C#14	1/C#14 *	1/C#4	1/C#6 BARE
1	1 - 50	80				2		
2	1 - 50	30				2		
3	1 - 50	1				2		
4	1 - 50	18			2			
5	1 - 38	60					3	1
6	1 - 50	13			2			1
7	1 - 75	2	1					2
8	1 - 75	20	1		2			1
9	1 - 75	2	1	2				2
10	1 - 50	95				2		
11	1 - 50	4				2		
12	1 - 50	130			1			
13	1 - 50	50				2		
14	1 - 50	3				2		
15	1 - 50	30				2		
16	1 - 50	40			2			
17	1 - 50	10			2			
18	1 - 75	2	1	2				1
19	1 - 75	15	1	2	2			1
20	1 - 75	2	1					2
21	1 - 50	20			1			
22	1 - 50	2				2		
23	1 - 75	35	2	2	3			1
24	2 - 75	20	4	4	5			1
25	1 - 50	2				2		
26	2 - 75	45	4	4	6			1
27	2 - 75	40	3	4	6			1
28	1 - 50	2				2		
29	2 - 75	19	3	4	5	2		1
30	1 - 75	2						2
31	1 - 50	50				2		
32	1 - 50	2				2		
33	1 - 50	15				2		
34	1 - 50	45			2			
35	1 - 50	12			2			
36	1 - 75	2	1					1
37	1 - 75	18	1		2			1
38	1 - 75	2	1	2				2
39	1 - 50	20			1			1
40	1 - 50	2				2		
41	1 - 75	32	2	2	3	2		1
42	1 - 75	21	1	2	2			1
43	1 - 75	2	1	2				1
44	1 - 50	16			2			
45	1 - 50	45			2			
46	1 - 50	30				2		
47	1 - 50	3				2		
48	1 - 50	50				2		
49	1 - 50	130			1			
50	1 - 50	3				2		
51	1 - 50	95				2		
52	1 - 38	13					3	1
53	1 - 38	20					3	1
54	1 - 38	20					3	1
55	1 - 38	45					3	1
A			1					2
B			1	2				1
C			1					2
D			1	4				2
E			1					2
F			1	4				2
G			1					1
H			1	2				1

* 1/C#14 LOOP WIRE SHOWN FOR CONTRACTOR'S INFORMATION ONLY.

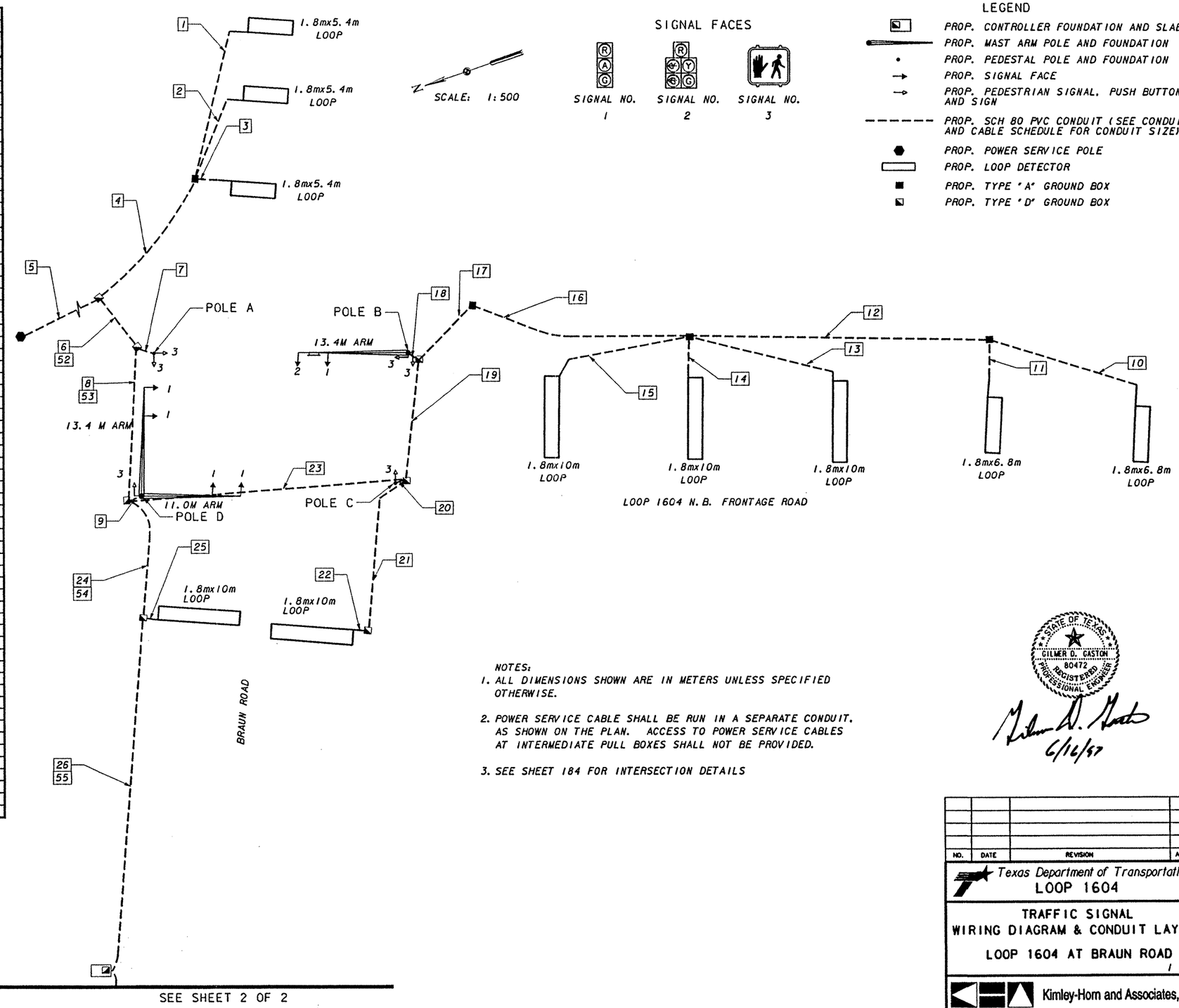

NOTES:

1. ALL DIMENSIONS SHOWN ARE IN METERS UNLESS SPECIFIED OTHERWISE.
2. POWER SERVICE CABLE SHALL BE RUN IN A SEPARATE CONDUIT, AS SHOWN ON THE PLAN. ACCESS TO POWER SERVICE CABLES AT INTERMEDIATE PULL BOXES SHALL NOT BE PROVIDED.
3. SEE SHEET 184 FOR INTERSECTION DETAILS

STATE OF TEXAS
GILMER D. GASTON
80472
REGISTERED PROFESSIONAL ENGINEER

6/16/97

NO.	DATE	REVISION	APPROV.

Texas Department of Transportation
LOOP 1604

TRAFFIC SIGNAL
WIRING DIAGRAM & CONDUIT LAYOUT
LOOP 1604 AT BRAUN ROAD
1 OF 2

Kimley-Horn and Associates, Inc.

Designed	HP	DIST	FED REG	FEDERAL AID PROJECT				HIGHWAY
Checked	JJ	15	6					LP1604
Drawn	HP	COUNTY			CONTROL	SECT	JOB	SHEET
Checked	GDG	BEXAR			2452	01	035	310

LEVELS DISPLAYED
1 2 3 4 5 6 7 8 9 10 11 12 13 14 15 16
17 18 19 20 21 22 23 24 25 26 27 28 29 30 31 32
33 34 35 36 37 38 39 40 41 42 43 44 45 46 47 48
49 50 51 52 53 54 55 56 57 58 59 60 61 62 63

H:\DRAWINGS\67316031\SIGNALS\BRNDETS1.DGN

LEGEND

- PROP. CONTROLLER FOUNDATION AND SLAB
- PROP. MAST ARM POLE AND FOUNDATION
- PROP. PEDESTAL POLE AND FOUNDATION
- PROP. SIGNAL FACE
- PROP. PEDESTRIAN SIGNAL, PUSH BUTTON, AND SIGN
- PROP. SCH 80 PVC CONDUIT (SEE CONDUIT AND CABLE SCHEDULE FOR CONDUIT SIZE)
- PROP. POWER SERVICE POLE
- PROP. LOOP DETECTOR
- PROP. TYPE "A" GROUND BOX
- PROP. TYPE "D" GROUND BOX

SIGNAL FACES

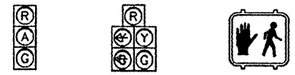

SIGNAL NO. 1 SIGNAL NO. 2 SIGNAL NO. 3

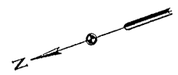

SCALE: 1:500

NOTES:

1. ALL DIMENSIONS SHOWN ARE IN METERS UNLESS SPECIFIED OTHERWISE.
2. POWER SERVICE CABLE SHALL BE RUN IN A SEPARATE CONDUIT, AS SHOWN ON THE PLAN. ACCESS TO POWER SERVICE CABLES AT INTERMEDIATE PULL BOXES SHALL NOT BE PROVIDED.
3. SEE SHEET 184 FOR INTERSECTION DETAILS

SEE SHEET 1 OF 2

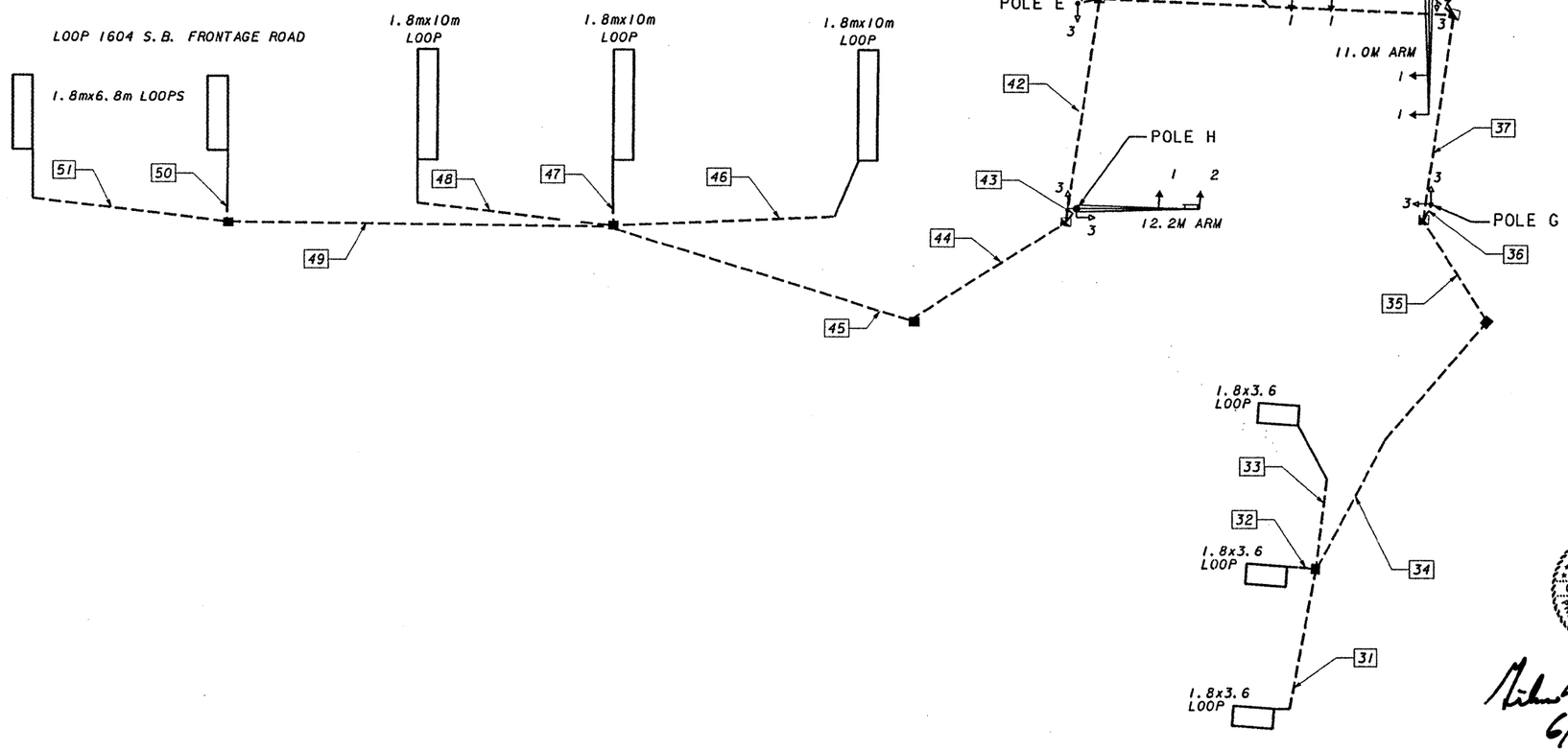

CONDUIT AND CABLE SCHEDULE								
RUN/ POLE NO.	CONDUIT NO. - SIZE (mm)	CONDUIT LENGTH (m)	SIGNAL CABLE 9/C#14	7/C#14	2/C#14	1/C#14 *	1/C#4	1/C#6 BARE
1	1 - 50	80				2		
2	1 - 50	30				2		
3	1 - 50	1				2		
4	1 - 50	18			2			
5	1 - 38	60					3	1
6	1 - 50	13			2			1
7	1 - 75	2	1					2
8	1 - 75	20	1		2			1
9	1 - 75	2	1	2				2
10	1 - 50	95				2		
11	1 - 50	4				2		
12	1 - 50	130			1			
13	1 - 50	50				2		
14	1 - 50	3				2		
15	1 - 50	30				2		
16	1 - 50	40			2			
17	1 - 50	10			2			
18	1 - 75	2	1	2				1
19	1 - 75	15	1	2	2			1
20	1 - 75	2	1					2
21	1 - 50	20			1			
22	1 - 50	2				2		
23	1 - 75	35	2	2	3			1
24	2 - 75	20	4	4	5			1
25	1 - 50	2				2		
26	2 - 75	45	4	4	6			1
27	2 - 75	40	3	4	6			1
28	1 - 50	2				2		
29	2 - 75	19	3	4	5	2		1
30	1 - 75	2						2
31	1 - 50	50				2		
32	1 - 50	2				2		
33	1 - 50	15				2		
34	1 - 50	45			2			
35	1 - 50	12			2			
36	1 - 75	2	1					1
37	1 - 75	18	1		2			1
38	1 - 75	2	1	2				2
39	1 - 50	20			1			1
40	1 - 50	2				2		
41	1 - 75	32	2	2	3	2		1
42	1 - 75	21	1	2	2			1
43	1 - 75	2	1	2				1
44	1 - 50	16						
45	1 - 50	45			2			
46	1 - 50	30				2		
47	1 - 50	3				2		
48	1 - 50	50				2		
49	1 - 50	130			1			
50	1 - 50	3				2		
51	1 - 50	95				2		
52	1 - 38	13					3	1
53	1 - 38	20					3	1
54	1 - 38	20					3	1
55	1 - 38	45					3	1
A			1					2
B			1	2				1
C			1					2
D			1	4				2
E			1					2
F			1	4				2
G			1					1
H			1	2				1

* 1/C#14 LOOP WIRE SHOWN FOR CONTRACT R'S INFORMATION ONLY.

STATE OF TEXAS
GILMER D. GASTON
80472
REGISTERED PROFESSIONAL ENGINEER

6/16/97

Texas Department of Transportation
LOOP 1604

TRAFFIC SIGNAL
WIRING DIAGRAM & CONDUIT LAYOUT
LOOP 1604 AT BRAUN ROAD

2 OF 2

Kimley-Horn and Associates, Inc.

Designed	HP	DIST	FED REG	FEDERAL AID PROJECT			HIGHWAY
Checked	JJ	15	6				LP1604
Drawn	HP	COUNTY		CONTROL	SECT	JOB	SHEET
Checked	GDG	BEXAR		2452	01	035	311

LEVELS DISPLAYED

1	2	3	4	5	6	7	8	9	10	11	12	13	14	15	16
17	18	19	20	21	22	23	24	25	26	27	28	29	30	31	32
33	34	35	36	37	38	39	40	41	42	43	44	45	46	47	48
49	50	51	52	53	54	55	56	57	58	59	60	61	62	63	

H:\DRAWINGS\6731603\SIGNALS\BRNDETS2.DGN

NOTES:

1. THE CONTRACTOR SHALL CONTACT THE CITY OF SAN ANTONIO TRAFFIC OPERATIONS ENGINEER AT (210) 207-7720 96 HOURS PRIOR TO CONSTRUCTION. PRIOR TO PICKING UP CITY FURNISHED MATERIALS, AND PRIOR TO SIGNAL TURN ON. ALL CITY FURNISHED EQUIPMENT MAY BE PICKED UP FROM THE TRAFFIC OPERATIONS SHOP LOCATED AT 223 SOUTH CHERRY STREET.
2. ALL DIMENSIONS SHOWN ARE IN METERS UNLESS SPECIFIED OTHERWISE.
3. PROPOSED LOOP DETECTORS SHALL BE INSTALLED PRIOR TO THE FINAL ASPHALT MAT.
4. ALL PVC SHALL BE SCHEDULE 80 UNLESS SPECIFIED OTHERWISE.
5. PROPOSED LOOP DETECTOR PLACEMENTS ARE EXAGERATED TO SHOW OVERALL LOOP LAYOUT.
6. ALL SIGNAL FOUNDATIONS SHALL BE INSTALLED ACCORDING TO TS-FD STANDARD SHEET.
7. INSTALLATION OF SIGNS TO BE CONSIDERED SUBSIDIARY TO BID ITEM 680.
8. TRAFFIC SIGNAL AND ILLUMINATION CONDUITS SHALL BE PLACED IN SAME TRENCH AND SHALL BE INSTALLED BEFORE PLACEMENT OF NEW PAVEMENT.
9. SEE SHEET 313 FOR INTERSECTION DETAILS

LEGEND

- PROP. CONTROLLER FOUNDATION AND SLAB
- PROP. STEEL STRAIN POLE
- PROP. PEDESTAL POLE AND FOUNDATION
- PROP. SIGNAL FACE
- PROP. PEDESTRIAN SIGNAL, PUSH BUTTON, AND SIGN
- PROP. SCH 80 PVC CONDUIT (SEE CONDUIT AND CABLE SCHEDULE FOR CONDUIT SIZE)
- BORING FOR CONDUIT INSTALLATION
- PROP. POWER SERVICE POLE
- PROP. LOOP DETECTOR
- PROP. TYPE "A" GROUND BOX
- PROP. TYPE "D" GROUND BOX

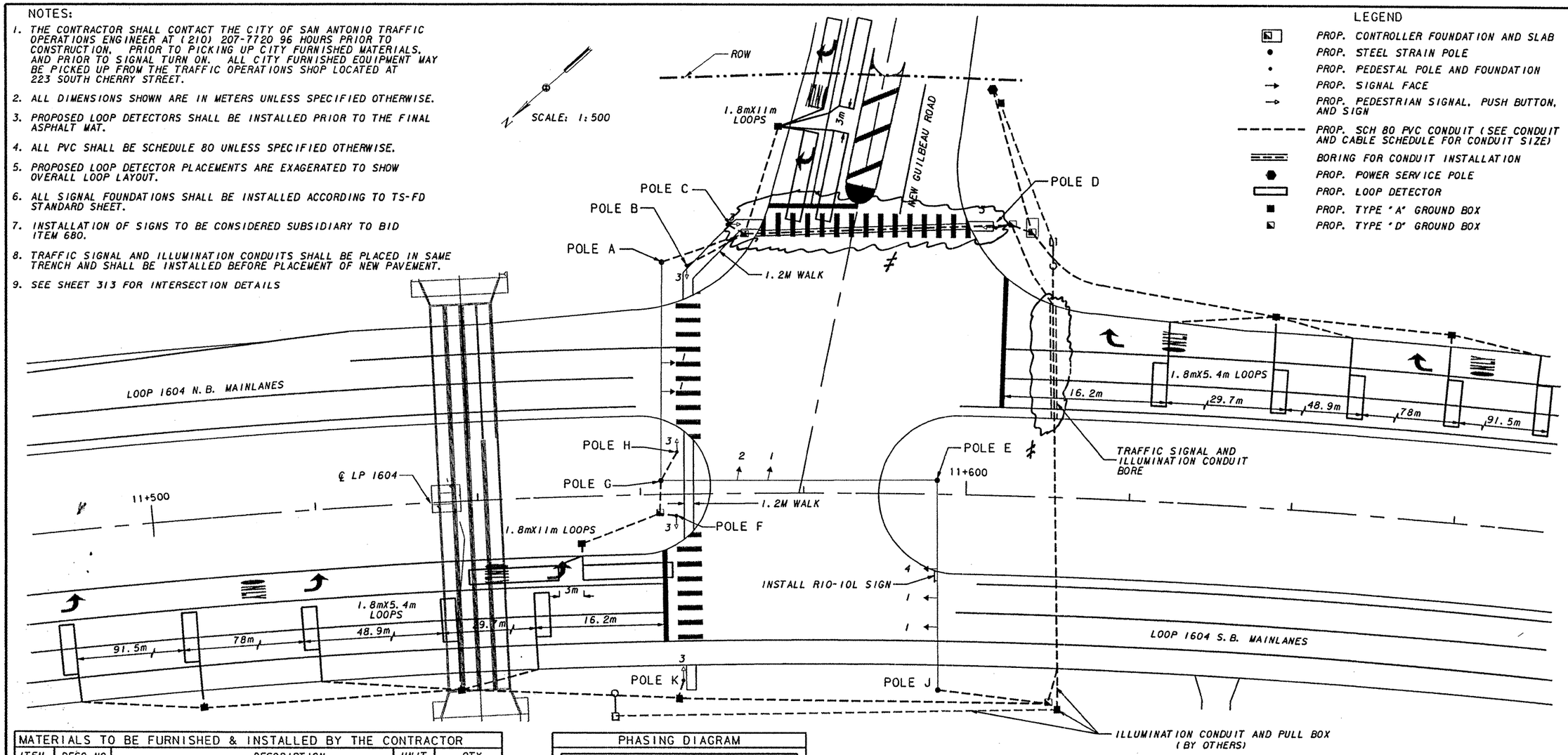

SIGNAL FACES

SIGNAL NO. 1 SIGNAL NO. 2 SIGNAL NO. 3 SIGNAL NO. 4

MATERIALS TO BE FURNISHED & INSTALLED BY THE CONTRACTOR

ITEM	DESC. NO.	DESCRIPTION	UNIT	QTY.
618	5016	CONDUIT (PVC)(SCHD 80)(38 MM)	M	50
618	5018	CONDUIT (PVC)(SCHD 80)(50 MM)	M	820
618	5020	CONDUIT (PVC)(SCHD 80)(75 MM)	M	165
620	5004	ELEC CONDUCTOR (NO. 6) BARE	M	380
620	5011	ELEC CONDUCTOR (NO. 4) INSULATED	M	180
624	5001	GROUND BOX TY A (122311) W/APRON	EA	7
624	5004	GROUND BOX TY D (162922) W/APRON	EA	5
628	5045	ELEC SERV TY D (120/240)070(NS)GS(T)TP(O)	EA	1
656	5003	FND FOR TRAF SIG (600 MM DRIL SHFT)	M	5
656	5006	FND FOR TRAF SIG (TYB)(900MM DRIL SHFT)	M	18.4
656	5027	TRAF SIG CNTRL FND (CITY TYPE)	EA	1
680	5001	INSTAL OF HWY TRAF SIG (ISOLATED)	EA	1
682	5002	VEH SIG SEC (300 MM)	EA	23
682	5005	PED SIG SEC (2 INDICATIONS IN 1 SEC)	EA	6
682	5009	BACK PLATE (3 SEC)(300 MM)	EA	6
682	5011	BACK PLATE (5 SEC)(300 MM)	EA	1
684	5047	TRAF SIG CBL (TY A)(7 CONDR)(14 AWG)	M	400
684	5048	TRAF SIG CBL (TY A)(9 CONDR)(14 AWG)	M	380
684	5044	TRAF SIG CBL (TY C)(2 CONDR)(14 AWG)	M	870
686	5004	TRAF SIG POLE ASM STL STR(TYD)10.4M	EA	4
688	5001	PED DETECT (PUSH BTN)	EA	6
688	5011	VEH DETECT (14 AWG)(SAWCUT LOOPS)	M	360
6006	5001	PEDESTAL POLE ASSEM	EA	6

PHASING DIAGRAM

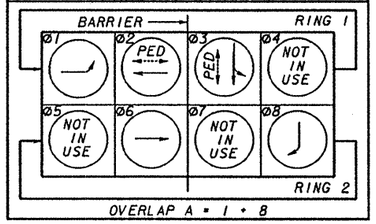

MATERIALS TO BE FURNISHED BY CITY OF SAN ANTONIO

DESCRIPTION	UNIT	QTY.
CONTROLLER WITH CABINET	EA.	1
AMPLIFIERS	EA.	7
R10-10L SIGN (FURNISH ONLY)	EA.	1
R10-4b PEDESTRIAN PUSH BUTTON SIGN (FURNISH ONLY)	EA.	6

‡ Conduit (PVC)(Schd 80)(Bore)(75MM) M 94‡

(‡CHANGE ORDER NO8) 6/16/97

GREGORY A. BRADDOCK 11/12/98

STATE OF TEXAS GILMER D. GASTON 80472 REGISTERED PROFESSIONAL ENGINEER

Texas Department of Transportation
LOOP 1604

TRAFFIC SIGNAL
INTERSECTION LAYOUT

LOOP 1604 AT NEW GUILBEAU ROAD

Kimley-Horn and Associates, Inc.

Designed GDG	DIST	FED REG	FEDERAL AID PROJECT			HIGHWAY
Checked JJ	15	6				LP1604
Drawn HP	COUNTY		CONTROL	SECT	JOB	SHEET
Checked GDG	BEXAR		2452	01	035	312

LEVELS DISPLAYED

H:\DRAWINGS\6731603\SIGNALS\GILBOSIG.DGN

LEGEND

- PROP. CONTROLLER FOUNDATION AND SLAB
- PROP. STEEL STRAIN POLE
- PROP. PEDESTAL POLE AND FOUNDATION
- ILLUMINATION ASSEMBLY (BY OTHERS)
- PROP. SIGNAL FACE
- PROP. PEDESTRIAN SIGNAL, PUSH BUTTON, AND SIGN
- PROP. SCH 80 PVC CONDUIT (SEE CONDUIT AND CABLE SCHEDULE FOR CONDUIT SIZE)
- ILLUMINATION CONDUIT (BY OTHERS)
- PROP. POWER SERVICE POLE
- PROP. LOOP DETECTOR
- ILLUMINATION GROUND BOX (BY OTHERS)
- PROP. TYPE "A" GROUND BOX
- PROP. TYPE "D" GROUND BOX

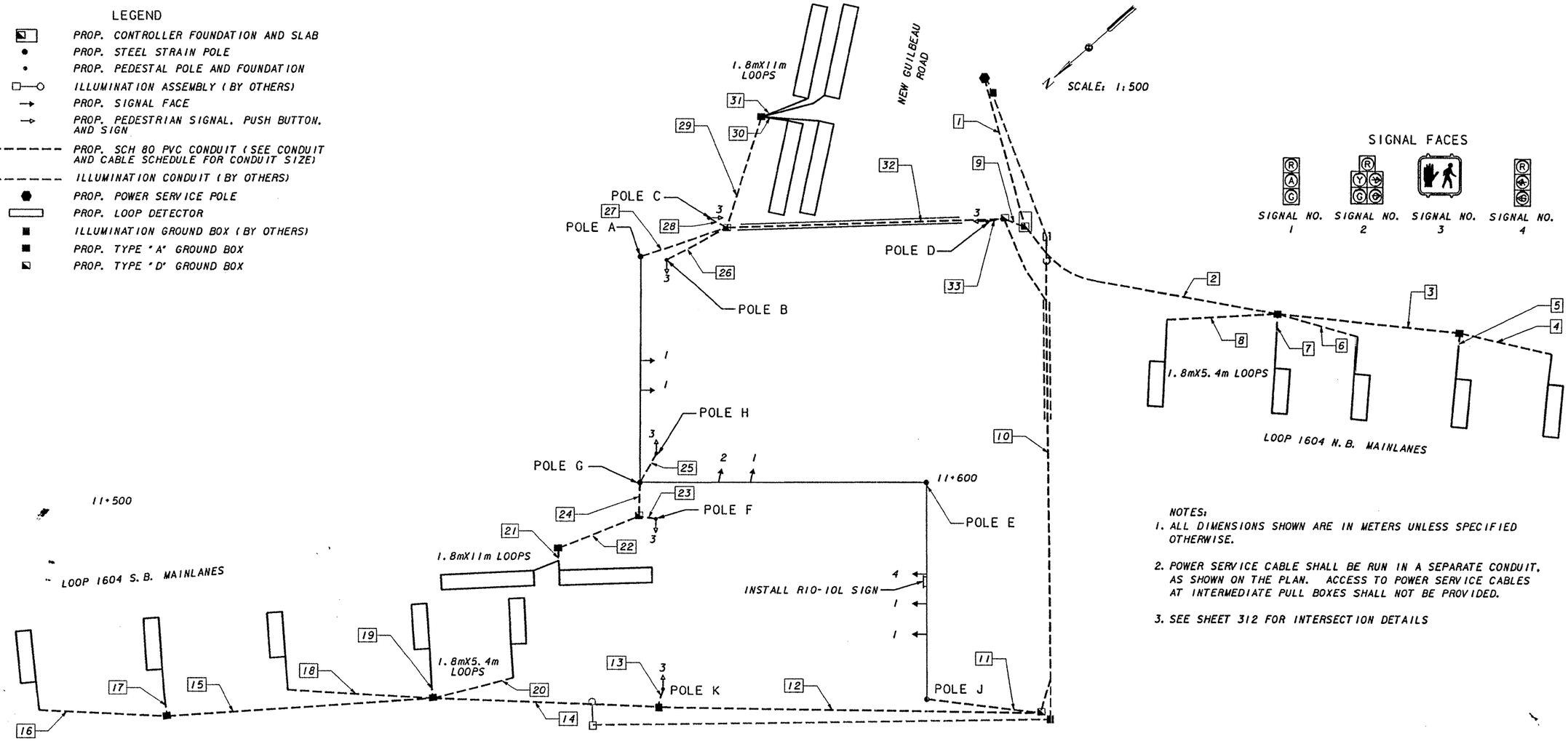

NOTES:

1. ALL DIMENSIONS SHOWN ARE IN METERS UNLESS SPECIFIED OTHERWISE.
2. POWER SERVICE CABLE SHALL BE RUN IN A SEPARATE CONDUIT, AS SHOWN ON THE PLAN. ACCESS TO POWER SERVICE CABLES AT INTERMEDIATE PULL BOXES SHALL NOT BE PROVIDED.
3. SEE SHEET 312 FOR INTERSECTION DETAILS

CONDUIT AND CABLE SCHEDULE

RUN/ POLE NO.	CONDUIT NO. - SIZE (mm)	CONDUIT LENGTH (m)	SIGNAL CABLE 9/C#14	7/C#14	2/C#14	1/C#14 *	1/C#4	1/C#6 BARE
1	1 - 38	60					3	1
2	1 - 50	50			2			
3	1 - 50	130			1			
4	1 - 50	92				2		
5	1 - 50	2				2		
6	1 - 50	50				2		
7	1 - 50	2				2		
8	1 - 50	30				2		
9	2 - 75	3	6	4	5			1
10	1 - 75	65	1	2	2			1
11	1 - 75	14		2				1
12	1 - 50	45	1		2			1
13	1 - 50	3	1					1
14	1 - 50	50			2			
15	1 - 50	130			1			
16	1 - 50	92				2		
17	1 - 50	2				2		
18	1 - 50	50				2		
19	1 - 50	2				2		
20	1 - 50	30				2		
21	1 - 50	2				4		
22	1 - 50	10			1			

CONDUIT AND CABLE SCHEDULE

RUN/ POLE NO.	CONDUIT NO. - SIZE (mm)	CONDUIT LENGTH (m)	SIGNAL CABLE 9/C#14	7/C#14	2/C#14	1/C#14 *	1/C#4	1/C#6 BARE
23	1 - 50	2	1					2
24	1 - 50	4	1		1			1
25	1 - 50	4	1					2
26	1 - 50	10	1					2
27	1 - 75	10	2	2	1			1
28	1 - 50	2	1					2
29	1 - 50	13			2			
30	1 - 50	2				4		
31	1 - 50	2				4		1
32	2 - 75	33	4	2	3			1
33	1 - 50	2	1					2
A			2	2	1			2
B			1					2
C			1					2
D			1					2
E		—						1
F		—	1					2
G		—	2		1			1
H		—	1					2
J		—		2				1
K		—	1					2

* 1/C#14 LOOP WIRE SHOWN FOR CONTRACTOR'S INFORMATION ONLY.

STATE OF TEXAS
GILMER D. GASTON
80472
REGISTERED PROFESSIONAL ENGINEER

Gilmer D. Gaston
6/16/97

Texas Department of Transportation
LOOP 1604

TRAFFIC SIGNAL
WIRING DIAGRAM & CONDUIT LAYOUT
LOOP 1604 AT NEW GUILBEAU ROAD

Kimley-Horn and Associates, Inc.

Designed GDG	DIST	FED REG	FEDERAL AID PROJECT			HIGHWAY
Checked JJ	15	6				LP1604
Drawn HP	COUNTY		CONTROL	SECT	JOB	SHEET
Checked GDG	BEXAR		2452	01	035	313

H:\DRAWINGS\67316031\SIGNALS\GILDETS.DGN

LEVELS DISPLAYED
1 2 3 4 5 6 7 8 9 10 11 12 13 14 15 16
17 18 19 20 21 22 23 24 25 26 27 28 29 30 31 32
33 34 35 36 37 38 39 40 41 42 43 44 45 46 47 48
49 50 51 52 53 54 55 56 57 58 59 60 61 62 63

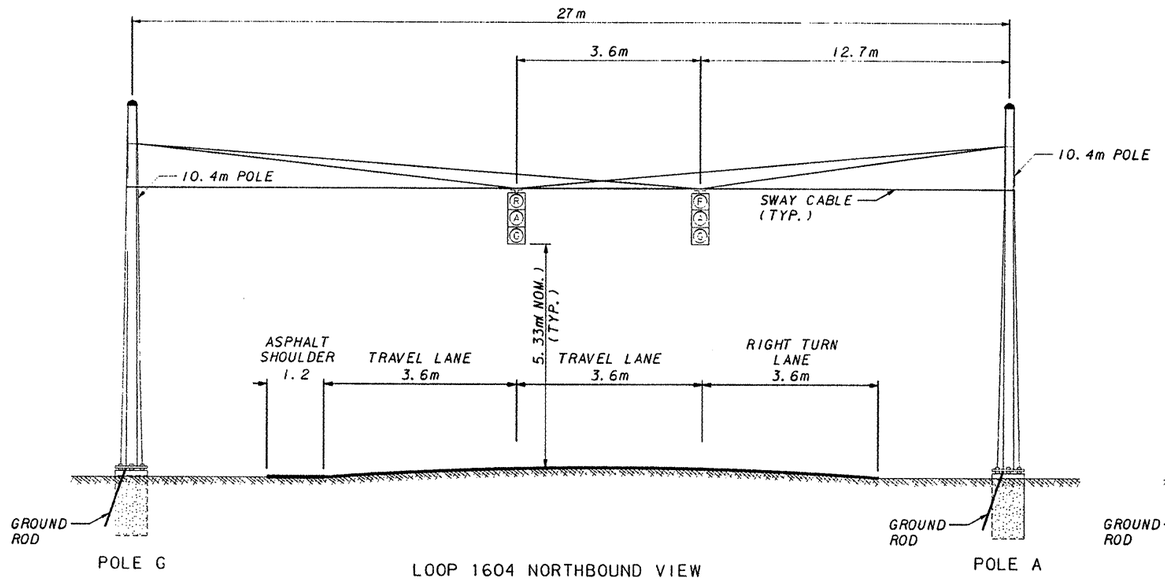

LOOP 1604 NORTHBOUND VIEW

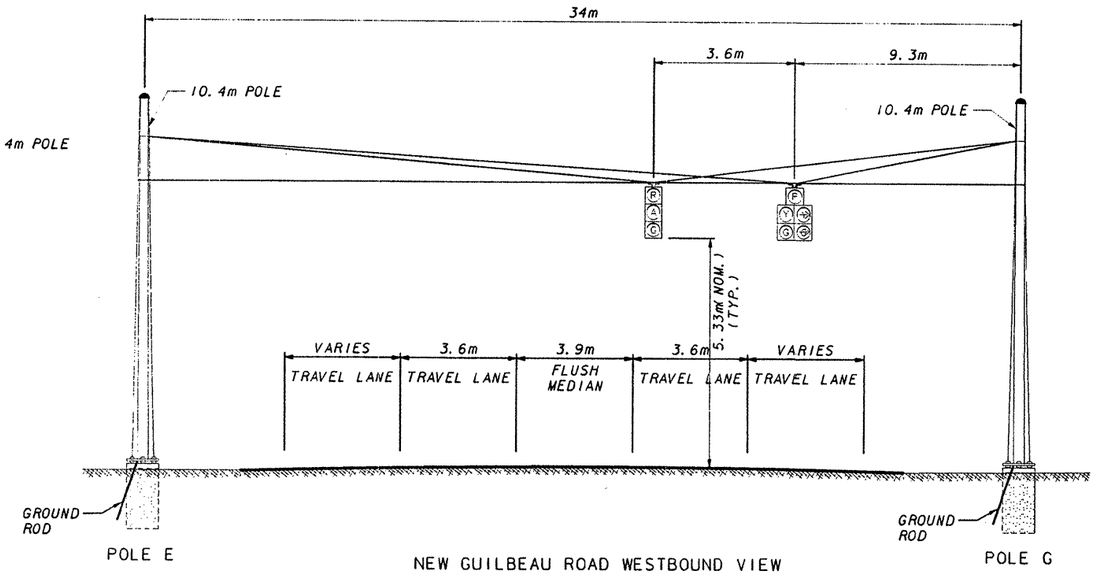

NEW GUILBEAU ROAD WESTBOUND VIEW

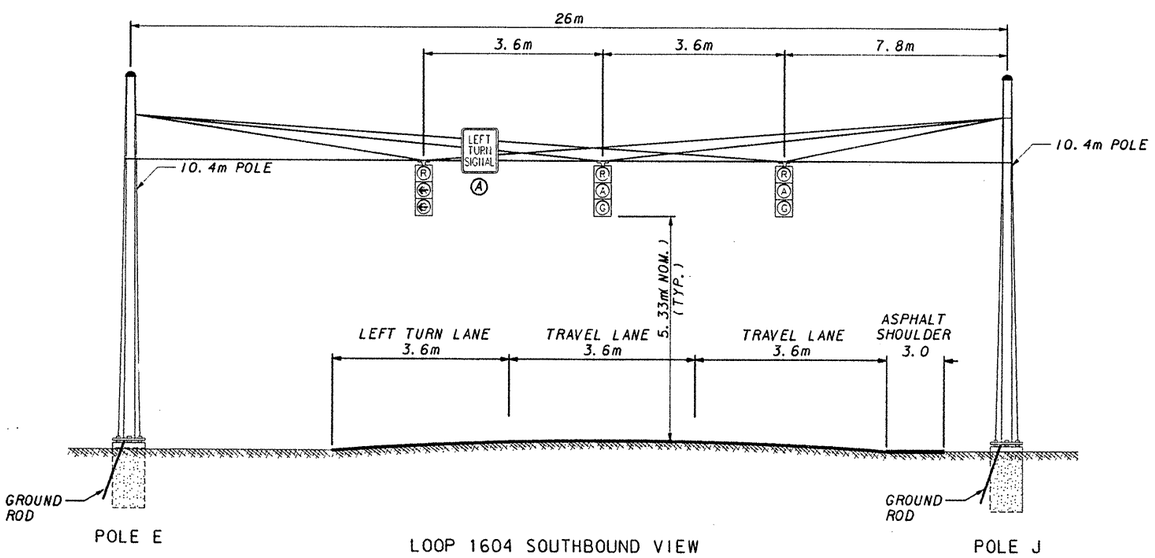

LOOP 1604 SOUTHBOUND VIEW

SIGN DETAILS

R10-10L
(24" x 30")
Ⓐ

STATE OF TEXAS
GILMER D. GASTON
80472
REGISTERED PROFESSIONAL ENGINEER

5/6/97

NO.	DATE	REVISION	APPROV.

Texas Department of Transportation
LOOP 1604

TRAFFIC SIGNAL ELEVATIONS
LOOP 1604 AT NEW GUILBEAU ROAD

Kimley-Horn and Associates, Inc.

Designed	HP	DIST	FED REG	FEDERAL AID PROJECT #				HIGHWAY
Checked	JJ	15	6					LP1604
Drawn	HP	COUNTY			CONTROL	SECT	JOB	SHEET
Checked	GDG	BEXAR			2452	01	035	314

LEVELS DISPLAYED
1 2 3 4 5 6 7 8 9 10 11 12 13 14 15 16
17 18 19 20 21 22 23 24 25 26 27 28 29 30 31 32
33 34 35 36 37 38 39 40 41 42 43 44 45 46 47 48
49 50 51 52 53 54 55 56 57 58 59 60 61 62 63

H:\DRAWINGS\67316031\SIGNAL\ELEVATES.DGN

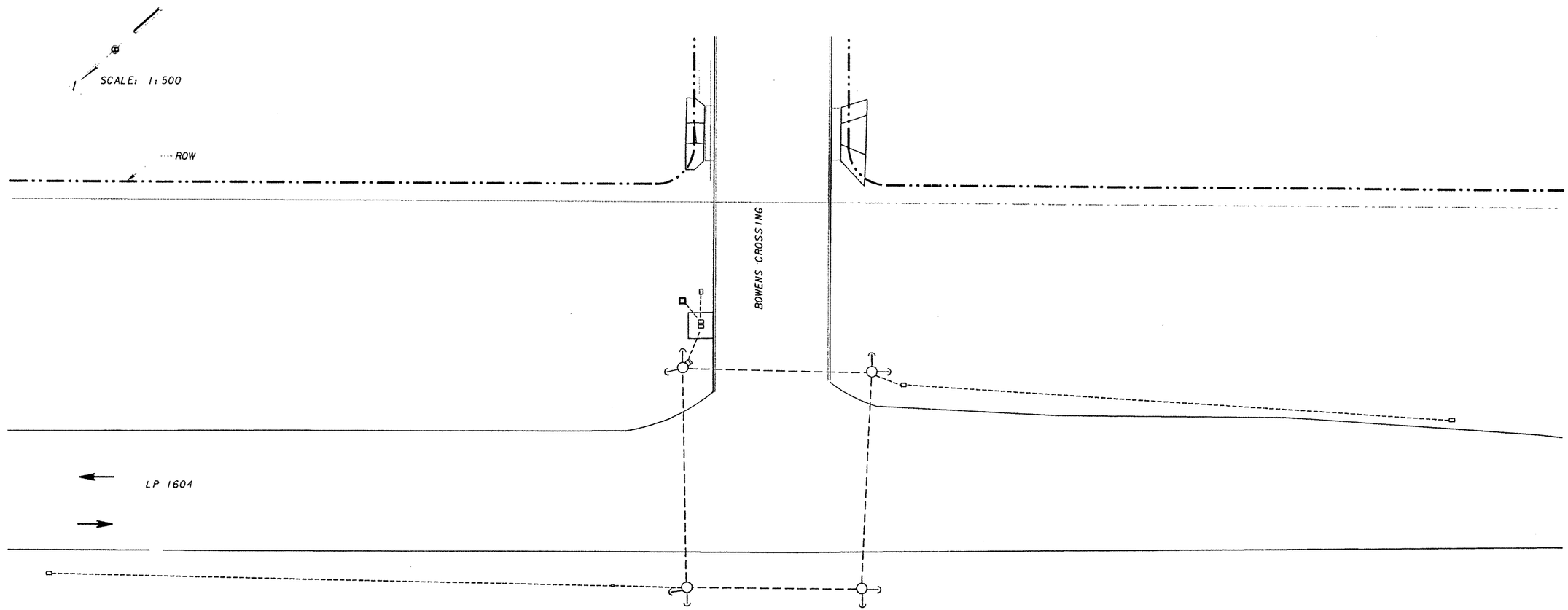

MATERIALS TO BE FURNISHED & INSTALLED BY THE CONTRACTOR				
ITEM NO.	DESC. NO.	DESCRIPTION	UNIT	QTY.
6008	5001	SALV TRAF SIGNALS	EA	1

LEGEND

- EXIST. PEDESTAL MOUNT CONTROLLER CABINER
- EXIST. POWER SERVICE
- EXIST. WOOD TRAFFIC POLE W\ GUY WIRE
- EXIST. LUMINAIRE
- EXIST. PULL BOX
- EXIST. CONDUIT
- EXIST. SPAN WIRE

NOTE:

ALL TRAFFIC SIGNAL EQUIPMENT SHALL BE REMOVED. EXISTING LOOP DETECTORS SHALL BE ABANDONED. ALL POLES, CABLE, WIRE, VEHICULAR SIGNAL HEADS, PEDESTRIAN BUTTONS, PEDESTRIAN HEADS, RIGID METAL CONDUIT, RISERS, AND CONTROLLER CABINET ASSEMBLY, SHALL BE SALVAGED TO **THE CITY OF SAN ANTONIO TRAFFIC OPERATIONS (SEE GENERL NOTES ITEM 6008).**

STATE OF TEXAS
GILMER D. GASTON
80472
REGISTERED PROFESSIONAL ENGINEER

5/6/97

Texas Department of Transportation
LOOP 1604

TRAFFIC SIGNAL
EXISTING CONDITIONS
LOOP 1604 AT BOWENS CROSSING

Kimley-Horn and Associates, Inc.

Designed	HP	DIST	FED REG	FEDERAL AID PROJECT				HIGHWAY
Checked	JJ	15	6					LP1604
Drawn	HP	COUNTY			CONTROL	SECT	JOB	SHEET
Checked	GDG	BEXAR			2452	01	035	315

H:\DRAWINGS\6731603\SIGNALS\XBOWEN.DGN

LEVELS DISPLAYED
1 2 3 4 5 6 7 8 9 10 11 12 13 14 15 16
17 18 19 20 21 22 23 24 25 26 27 28 29 30 31 32
33 34 35 36 37 38 39 40 41 42 43 44 45 46 47 48
49 51 52 53 54 55 56 57 58 59 60 61 62 63

NOTES:

VIVDS DETECTION ZONES SHALL BE PROVIDED ON EACH APPROACH TO DETECT VEHICLES ON A PER LANE BASIS.

ACTUAL PLACEMENT OF THE SENSOR UNITS AND DETECTION ZONES WILL BE VERIFIED BY THE ENGINEER PRIOR TO INSTALLATION.

SEE SHEET 59 FOR TRAFFIC SIGNAL SUMMARY QUANTITIES.

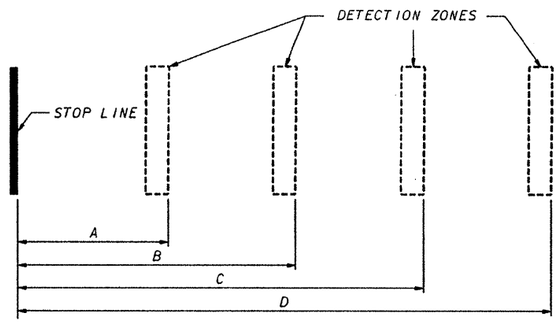

TYPE II, III & IV VIVDS DETECTION

NOT TO SCALE

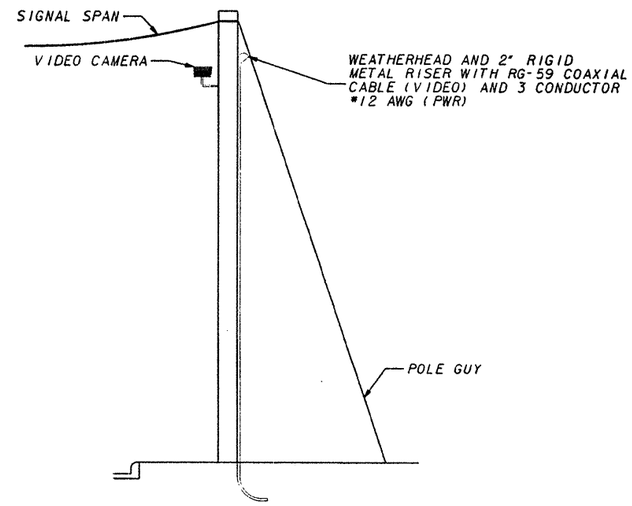

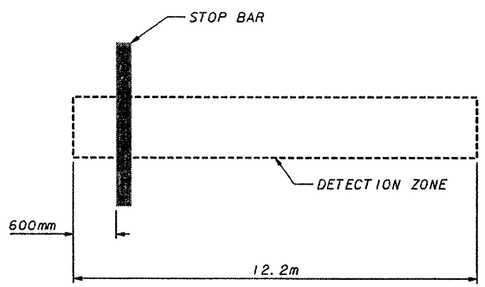

TYPE I VIVDS DETECTION

NOT TO SCALE

VIVDS DETECTION ZONES						
DETECTION TYPE	APPROACH SPEED	A	B	C	D	E
TYPE I	N/A	(STOP LINE PRESENCE)				
TYPE II	45 MPH	26m	42m	67m	-	-
TYPE III	50 MPH	17m	34m	55m	82m	-
TYPE IV	55 MPH	26m	42m	67m	98m	-

STATE OF TEXAS
GILMER D. GASTON
80472
REGISTERED PROFESSIONAL ENGINEER

Gilmer D. Gaston
5/6/97

NO.	DATE	REVISION	APPROV.

Texas Department of Transportation
LOOP 1604

VIVDS DETAILS

Kimley-Horn and Associates, Inc.

Designed	HP	DIST	FED REG	FEDERAL AID PROJECT				HIGHWAY
Checked	GDG	15	6					LP1604
Drawn	HP	COUNTY			CONTROL	SECT	JOB	SHEET
Checked	GDG	BEXAR			2452	01	035	316

\DRAWINGS\67316O3\SIGNALS\VIVDDET.DGN

LEVELS DISPLAYED
1 2 3 4 5 6 7 8 9 10 11 12 13 14 15 16
17 18 19 20 21 22 23 24 25 26 27 28 29 30 31 32
33 34 35 36 37 38 39 40 41 42 43 44 45 46 47 48
49 50 51 52 53 54 55 56 57 58 59 60 61 62 63

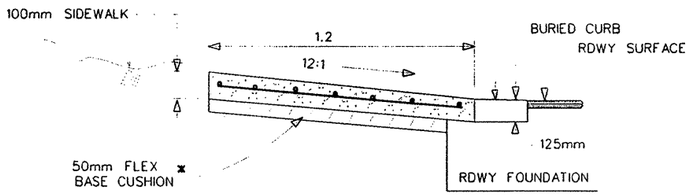

SECTION AT WHEELCHAIR RAMP

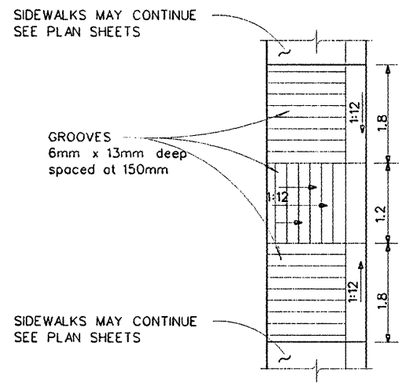

WHEELCHAIR RAMP LAYOUT

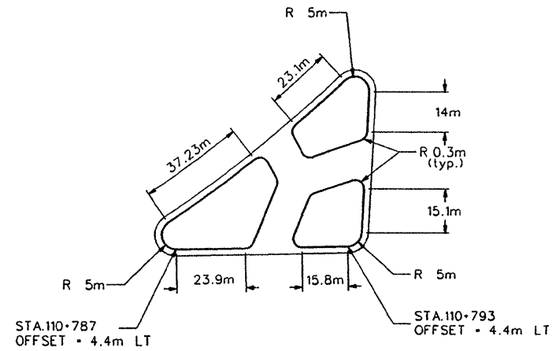

NORTHEAST ISLAND
LOOP 1604 AT BRAUN ROAD

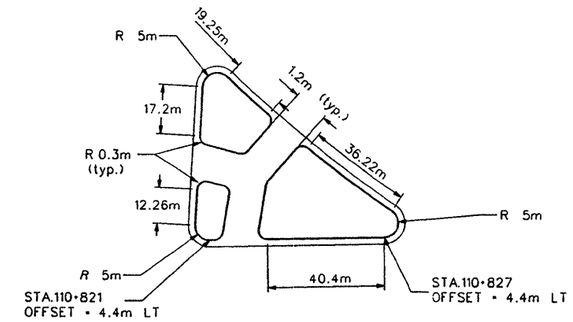

SOUTHEAST ISLAND
LOOP 1604 AT BRAUN ROAD

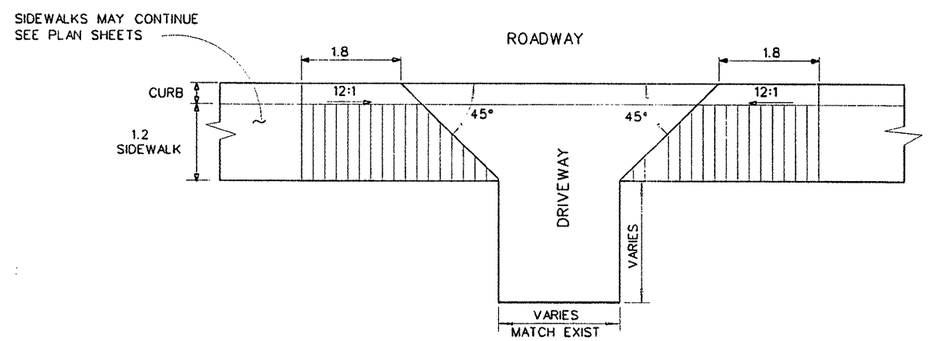

DRIVEWAY LAYOUT
W/ WHEELCHAIR RAMP

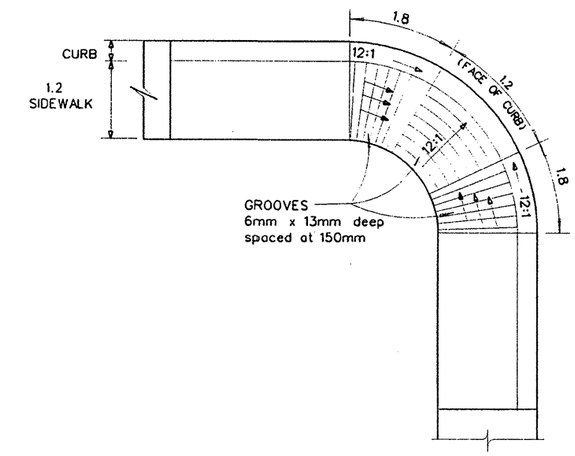

WHEELCHAIR RAMP LAYOUT
(WITHIN RADIUS)

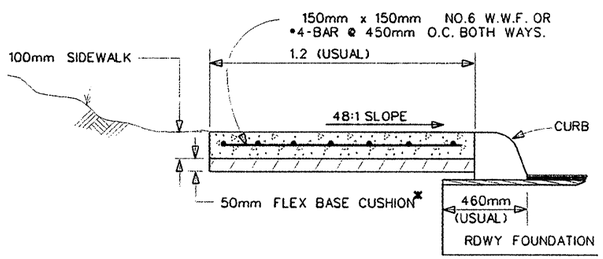

TYPICAL SIDEWALK SECTION

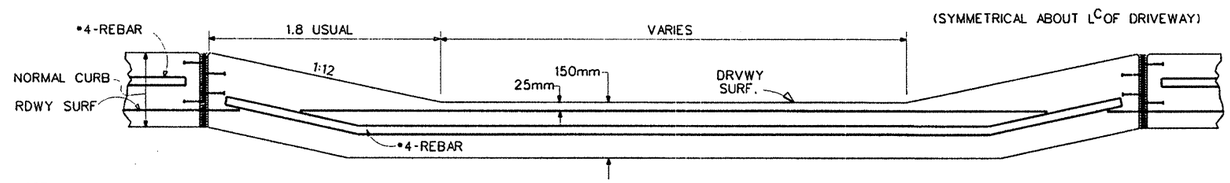

TYPICAL CONCRETE DRIVEWAY
ELEVATION @ DEPRESSED CURB

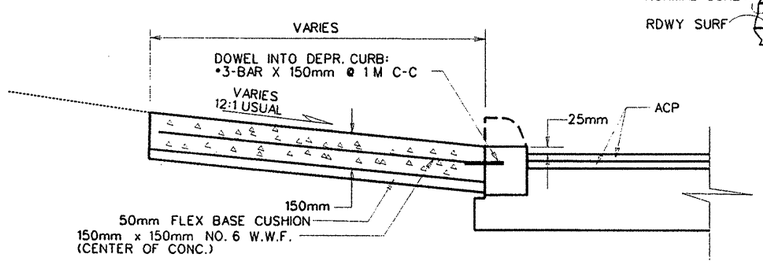

TYPICAL CONCRETE DRIVEWAY SECTION

* THE FLEX BASE CUSHION UNDER CONCRETE SIDEWALKS AND DRIVEWAYS MAY BE OF ANY TYPE AND GRADE APPROVED BY THE ENGINEER.

THE FLEX BASE WILL BE SPRINKLED AND ROLLED / TAMPED AS APPROVED BY THE ENGINEER. FURNISHING AND PLACING THE BASE CUSHION WILL BE SUBSIDIARY TO THE SIDEWALK AND DRIVEWAY ITEMS.

WHEELCHAIR RAMP LOCATIONS SHOWN ON THESE DETAILS ARE FOR REFERENCE ONLY. ACTUAL LOCATIONS OF WHEELCHAIR RAMPS ARE SHOWN BY SYMBOL ⊗ ON THE PLAN SHEETS, OR AS DIRECTED BY THE ENGINEER.

THE CONSTRUCTION OF ALL WHEELCHAIR RAMPS SHALL BE INCLUDED IN THE UNIT PRICE BID FOR CONCRETE SIDEWALKS, CONCRETE CURBS AND CONCRETE DRIVEWAY.

ALL DIMENSIONS ARE IN METERS UNLESS OTHERWISE SPECIFIED.

STATE OF TEXAS
BRENT L. CHRISTIAN
73921
REGISTERED
PROFESSIONAL ENGINEER

Brent L. Christian
5/5/97

MISCELLANEOUS ROADWAY DETAILS

Texas Department of Transportation

FED.RD. DIV.NO.	FEDERAL AID PROJECT NO.		SHEET NO.
6			317
STATE	DIST.	COUNTY	
TEXAS	15	BEXAR	
CONT.	SECT.	JOB	HIGHWAY NO.
2452	01	035	LP1604

LEVELS DISPLAYED
1 2 3 4 5 6 7 8 9 10 11 12 13 14 15 16
17 18 19 20 21 22 23 24 25 26 27 28 29 30 31 32
33 34 35 36 37 38 39 40 41 42 43 44 45 46 47 48
49 50 51 52 53 54 55 56 57 58 59 60 61 62 63

H:\DRAWINGS\6731603\BAMCWH-1.DGN

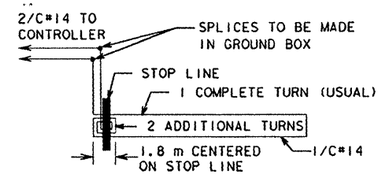

APPROACH WITH LONG LOOP

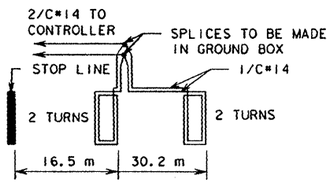

APPROACH WITH 2 LOOPS

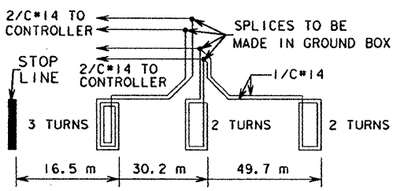

APPROACH WITH 3 LOOPS

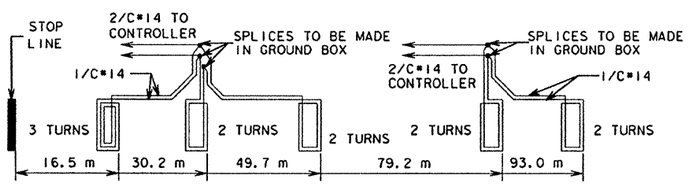

APPROACH WITH 5 LOOPS (FRONTAGE ROAD APPROACH)

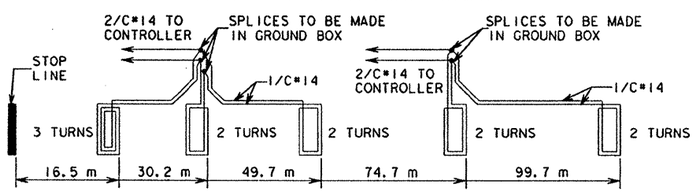

APPROACH WITH 5 LOOPS

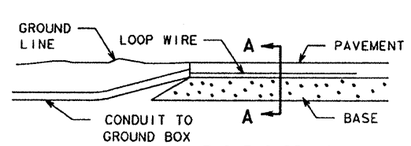

WITHOUT CURBING

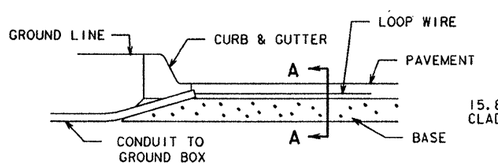

WITH CURBING

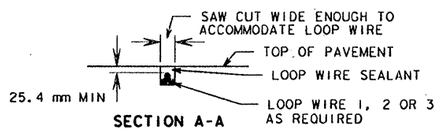

SECTION A-A

TYPICAL LOOP DETECTOR DETAILS

LOOP DETECTOR NOTES :

1. THE PAVEMENT CUT IS TO BE MADE WITH ANY EQUIPMENT THAT WILL PRODUCE A NEAT STRAIGHT LINE OF THE SIZE INDICATED. ALL LOOSE MATERIAL SHALL BE REMOVED. THE CUT SHALL BE CLEAN AND DRY WHEN THE WIRE AND THE SEALANT IS PLACED
2. WHERE MORE THAN ONE LOOP IS PLACED ON AN INTERSECTION APPROACH, THE WIRE FROM LOOP TO GROUND BOX SHALL NOT BE PLACED IN A SAW CUT WITH WIRE FROM OTHER LOOPS UNLESS OTHERWISE SHOWN IN THE PLANS
3. THE LOOP WIRE SHALL BE TWISTED A MINIMUM OF FIVE TURNS PER 305 mm FROM THE EDGE OF THE ROAD TO THE GROUND BOX AND NO SPLICES SHALL BE PERMITTED IN THE LOOP OR IN THE RUN TO THE PULL BOX
4. THE 1/C#14 LOOP WIRE SHALL BE SINGLE CONDUCTOR CROSSLINKED POLYETHYLENE (0.045) INSULATED WIRE, TYPE: USE, RHH, RHW, 14 AWG STRANDED COPPER RATED AT 600 VOLTS
5. THE 2/C#14 LOOP CABLE SHALL BE TWO CONDUCTOR SHIELDED CABLE, 14 AWG, 19 X 27 STRANDED , 600 VOLT TINNED COPPER, POLYETHYLENE INSULATED, TWISTED PAIR, TWISTED A MINIMUM OF FIVE TWISTS PER FOOT, ALUMINUM-POLYESTER SHIELD, 16 AWG STRANDED TINNED COPPER DRAIN WIRE, CHROME VINYL JACKET, 100 % SHIELD COVERAGE THE LOOP CABLE SHALL BE CONTINUOUS WITHOUT SPLICES
6. THE LOOP WIRE SHALL BE SPLICED TO THE LOOP CABLE BY SOLDERING CONDUCTORS, SECURING WITH A WIRE NUT AND FULLY ENCAPSULATING INTO A WATER TIGHT COMMERCIAL SPLICING KIT
7. ALL LOOP WIRE PLACED IN A SAW CUT SHALL BE SEALED BY FULLY ENCAPSULATING IT WITH LOOP WIRE SEALANT
8. ALL LOOP WIRE AND LOOP CABLE SHALL BE TESTED. WIRE AND CABLE TESTING LESS THAN 50 MEGAOHMS INSULATION RESISTANCE AT 500 VOLTS SHALL BE REPLACED BY THE CONTRACTOR AT HIS EXPENSE. THIS TEST SHOULD BE MADE BEFORE, DURING AND AFTER EACH COMPLETE LOOP DETECTOR INSTALLATION
9. UPON COMPLETION OF THE COMPLETE LOOP DETECTOR SYSTEM, THE FINAL TEST WILL BE MADE AT ITS TERMINATION AT THE CONTROLLER BY THE ENGINEER. ANY LOOP DETECTOR NOT MEETING THE REQUIREMENTS OF NOTE 8 SHALL BE REPLACED BY THE CONTRACTOR AT THEIR EXPENSE. THE FINAL TEST SHALL BE MADE PRIOR TO THE FINAL MAT OF A. C. P.

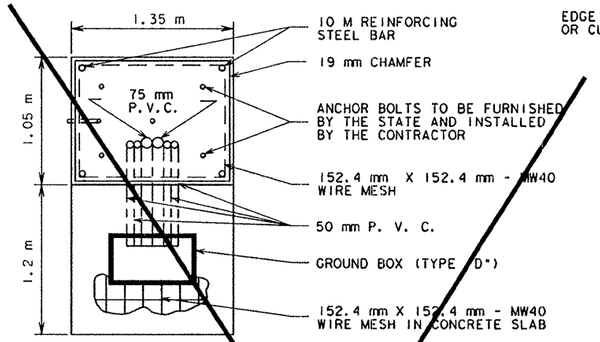

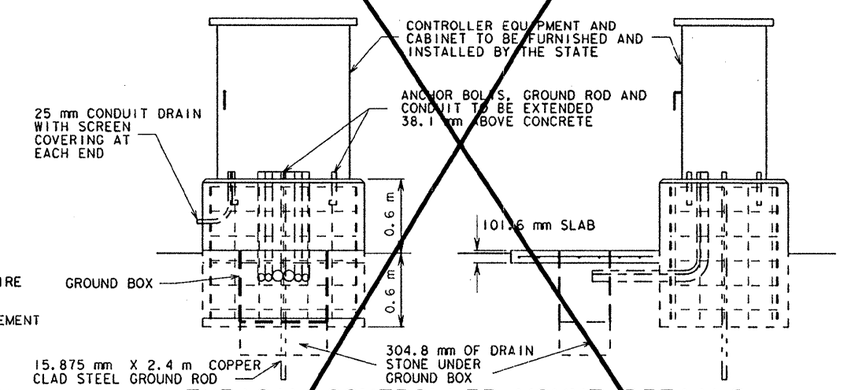

TYPICAL CONTROLLER MOUNT DETAILS

CONTROLLER MOUNT NOTES :

ALL WIRING TERMINATING IN THE CONTROLLER SHALL BE LABELLED IN A MANNER THAT CAN BE IDENTIFIED BY THE ENGINEER WHEN THE CONTROLLER IS INSTALLED

ONE 50 mm PVC SHALL REMAIN EMPTY FOR FUTURE USE

CLASS "A" CONCRETE SHALL BE USED FOR CONTROLLER FOUNDATION AND SLAB

CONCRETE SHALL BE TESTED AS MISCELLANEOUS CONCRETE

ALL MATERIALS AND LABOR TO INSTALL THE CONTROLLER FOUNDATION SHALL BE CONSIDERED SUBSIDIARY TO BID ITEM 656

CONTROLLER FOUNDATION MAY BE ALTERED TO ACCOMODATE FIELD CONDITIONS AS DIRECTED BY THE ENGINEER.

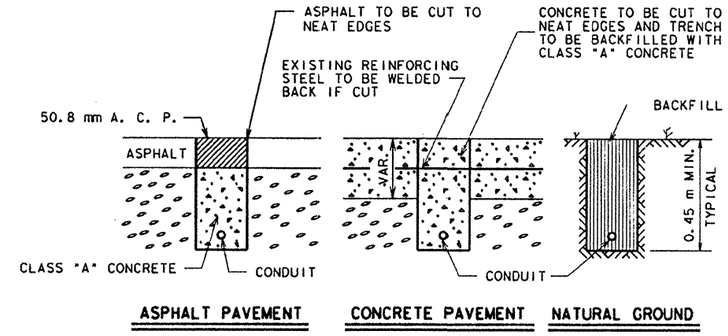

ASPHALT PAVEMENT | CONCRETE PAVEMENT | NATURAL GROUND

TRENCH DETAILS

CONCRETE TO BE TESTED AS MISCELLANEOUS CONCRETE
WIDTH OF TRENCH SHALL BE WIDE ENOUGH TO ACCOMODATE CONDUIT

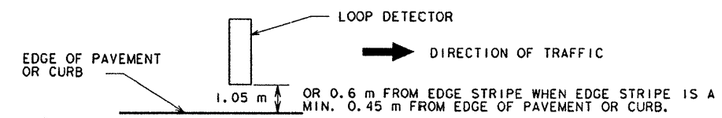

LOOP DETECTOR PLACEMENT

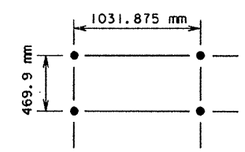

ANCHOR BOLT PATTERN

LOOP DETECTOR CONTROLLER FOUNDATION AND CONDUIT TRENCH DETAILS

SAN ANTONIO DISTRICT STANDARD

METRIC

OCTOBER, 1995

FED. RD. DIV. NO.	PROJECT NO.		SHEET NO.
6	CD2452-1-35		318
STATE	STATE DIST. NO.	COUNTY	
TEXAS	SAT	BEXAR	
CONT.	SECT.	JOB	HIGHWAY NO.
2452	01	035	LP1604

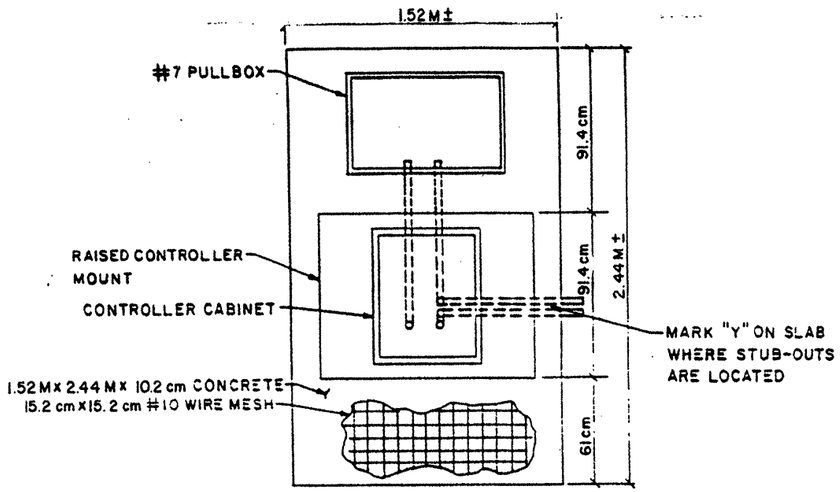

TOP VIEW

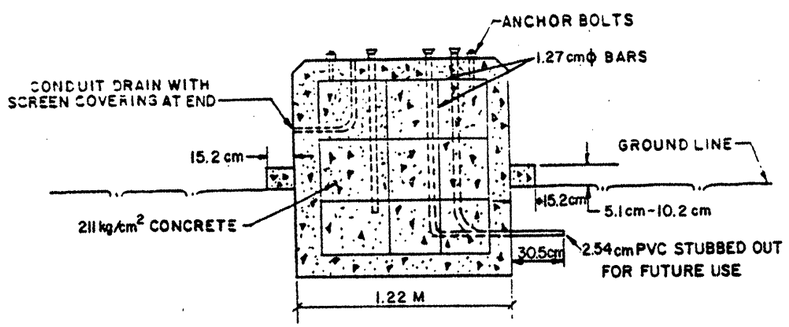

FRONT VIEW

CONTROLLER FOUNDATION DETAIL

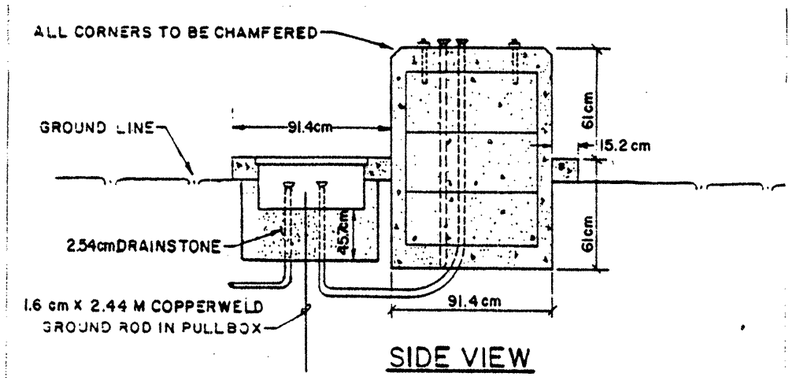

SIDE VIEW

NOTE: CONTRACTOR TO INSTALL PULLBOX, CONDUIT, CONTROLLER FOUNDATION, CONCRETE SLAB AND CONDUIT FROM PULLBOX TO CABINET.

CONTROLLER FOUNDATION DETAIL

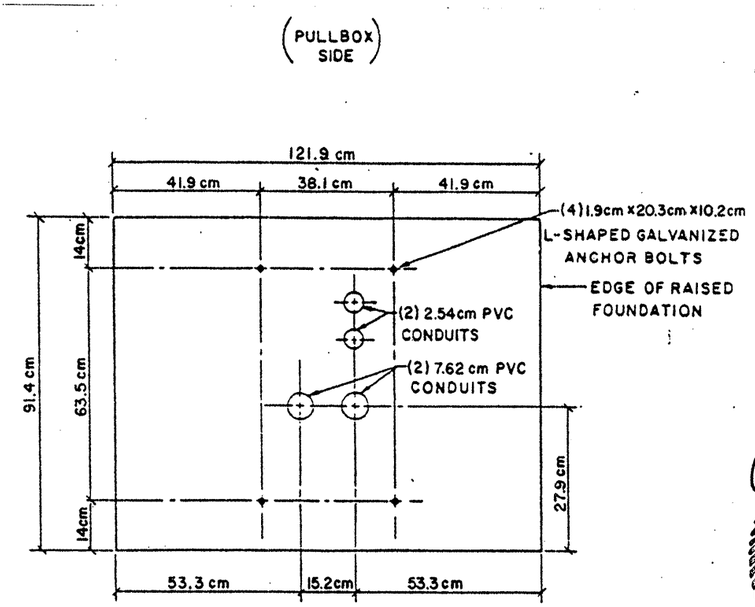

TOP VIEW
FOR ANCHOR BOLT LOCATION

STATE OF TEXAS
JOHN D. FRIEBELE
46394
REGISTERED PROFESSIONAL ENGINEER

6-11-97

FED. RD. DIV. NO.	FEDERAL AID PROJECT NO.		SHEET NO.
6	CD 2452-01-035		318A
STATE	STATE DIST. NO.	COUNTY	
TEXAS	15	BEXAR	
CONT.	SECT	JOB	HIGHWAY NO.
2452	01	035	LP 1604

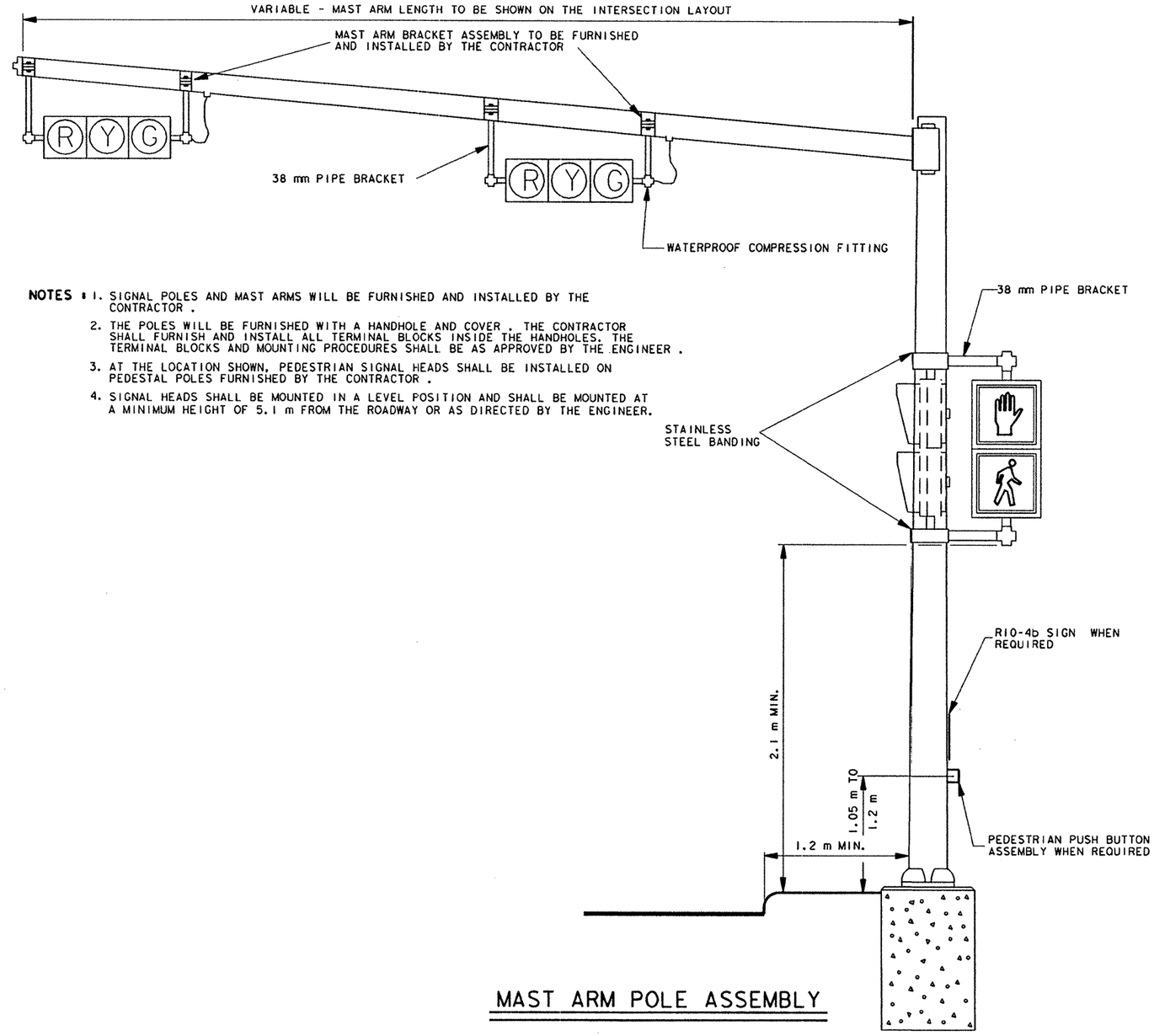

NOTES :

1. SIGNAL POLES AND MAST ARMS WILL BE FURNISHED AND INSTALLED BY THE CONTRACTOR .
2. THE POLES WILL BE FURNISHED WITH A HANDHOLE AND COVER . THE CONTRACTOR SHALL FURNISH AND INSTALL ALL TERMINAL BLOCKS INSIDE THE HANDHOLES. THE TERMINAL BLOCKS AND MOUNTING PROCEDURES SHALL BE AS APPROVED BY THE ENGINEER .
3. AT THE LOCATION SHOWN, PEDESTRIAN SIGNAL HEADS SHALL BE INSTALLED ON PEDESTAL POLES FURNISHED BY THE CONTRACTOR .
4. SIGNAL HEADS SHALL BE MOUNTED IN A LEVEL POSITION AND SHALL BE MOUNTED AT A MINIMUM HEIGHT OF 5.1 m FROM THE ROADWAY OR AS DIRECTED BY THE ENGINEER.

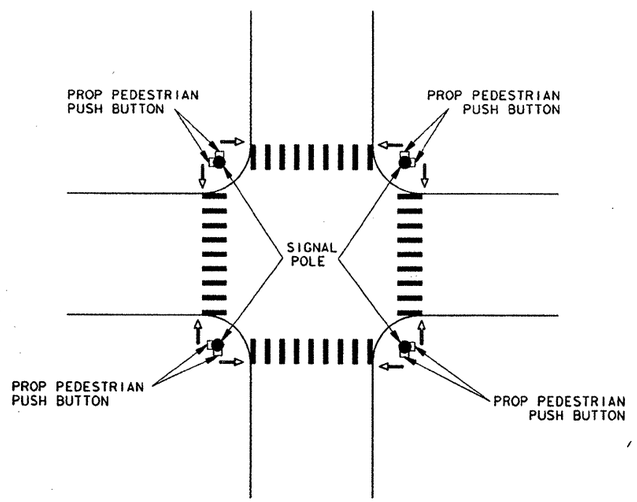

TYPICAL PED PUSH BUTTON LOCATION

THE ENGINEER SHALL VERIFY ALL PEDESTRIAN SIGNAL AND PEDESTRIAN PUSH BUTTON LOCATIONS PRIOR TO THEIR INSTALLATION.

MAST ARM POLE ASSEMBLY

MAST ARM POLE ELEVATION DETAILS

SAN ANTONIO DISTRICT STANDARD
METRIC

FED.RD. DIV.NO.	[redacted] PROJECT NO.		SHEET NO.
6	CD 2452-1-35		319
STATE	STATE DIST.NO.	COUNTY	
TEXAS	SAT	BEXAR	
CONT.	SECT.	JOB	HIGHWAY NO.
2452	01	035	LP 1604

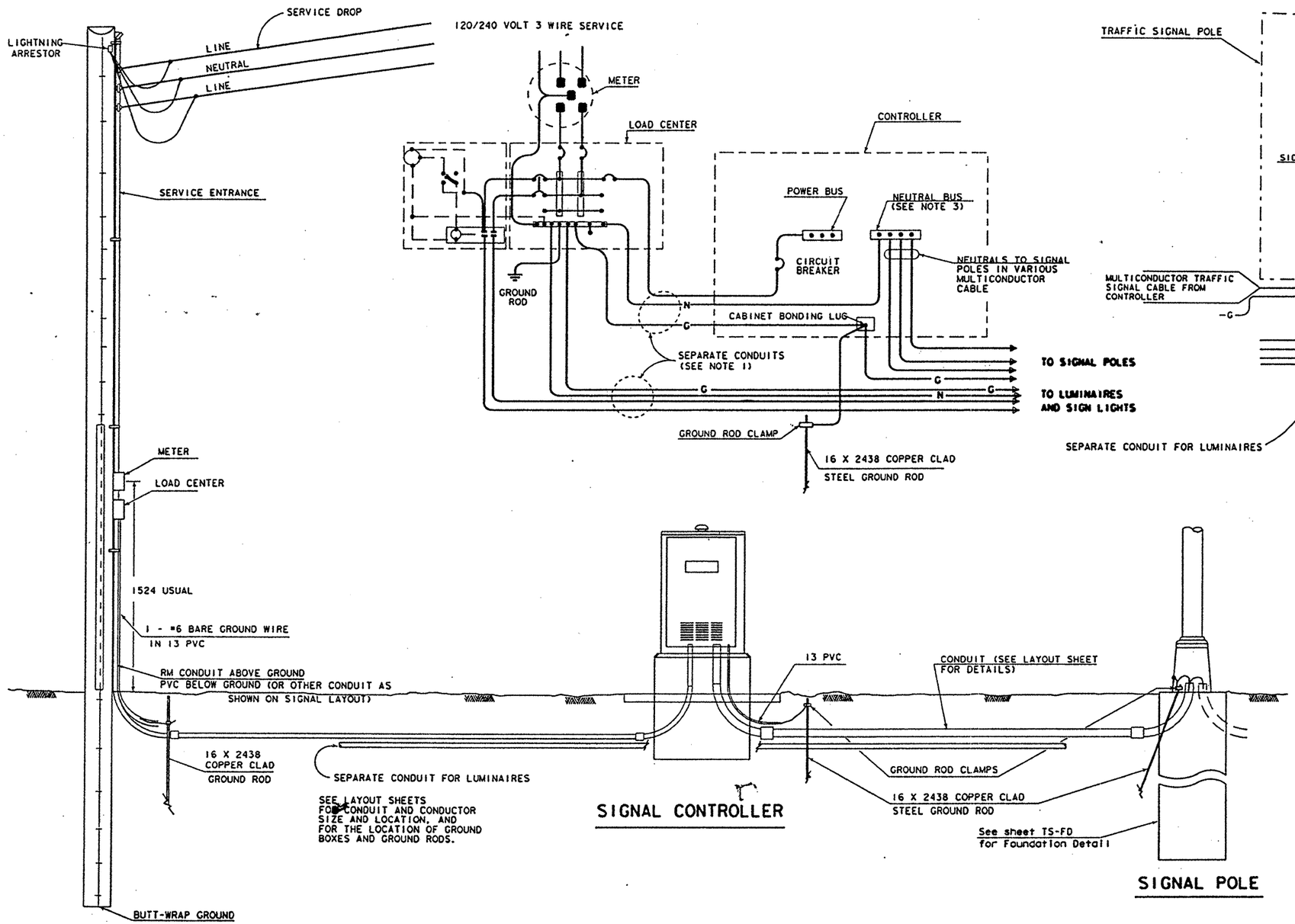

TYPE D SERVICE POLE

(TIMBER POLE SHOWN, SEE ELECTRICAL DETAILS, LAYOUT SHEETS, AND ELECTRICAL SERVICE DATA SHEET FOR SERVICE REQUIRED AND FOR DETAILS.)

NOTES:

1. Luminaire conductors should not be looped through controller cabinet.
2. Electrical system to include an equipment grounding conductor noted here as "G". All exposed metal parts, lightning arrestors and surge protectors are to be bonded to grounding conductor.
3. Bond neutral bus to cabinet bonding lug when required elsewhere on the plans or when required by the Engineer.
4. Install lighting contactor and photo electric control in separate NEMA 3R enclosure mounted on service support. Photocell shall be mounted at top of pole or in enclosure as required by ED(3)M and ED(4)M.
5. Roadway lighting fixtures, when required, shall be in accordance with the material and construction methods of the item, "Roadway Illumination Assemblies" except for the test period for proper operation of the luminaires. Installed roadway lighting luminaires and internally lighted street name signs shall be tested for proper operation as a part of the associated traffic signal system.
6. Internally lighted street name signs (ILSN), when required, shall be in accordance with the item "Internally Lighted Street Name Signs".

All dimensions are in millimeters unless otherwise noted.

STANDARD PLANS
TEXAS DEPARTMENT OF TRANSPORTATION
Traffic Operations Division

ELECTRICAL DETAILS- TYPICAL TRAFFIC SIGNAL SYSTEM DETAILS

ED(7)-93A(M)

ORIG DRAW DATE: January 1992	DN: KB	CK: TB	DW: RS	CK: TB	REG NO:
REVISIONS: 5-93, 10-93, 1-96	STATE DISTRICT: 15	FEDERAL REGION: 6	FEDERAL AID PROJECT: OD 2452-1-35		SHEET: 320
	COUNTY: BEXAR		CONTROL: 2452	SECTION: 01	JOB: 025	HIGHWAY: LP1604

DISCLAIMER
The use of this standard is governed by the "Texas Engineering Practice Act". No warranty of any kind is made by TxDOT for any purpose whatsoever. TxDOT assumes no responsibility for the conversion of this standard to other formats or for incorrect results or damages resulting from its use.

LEVELS DISPLAYED: 1 2 3 4 5 6 7 8 9 10 11 12 13 14 15 16 17 18 19 20 21 22 23 24 25 26 27 28 29 30 31 32 33 34 35 36 37 38 39 40 41 42 43 44 45 46 47 48 49 50 51 52 53 54 55 56 57 58 59 60 61 62 63

DATE: ACC: d58hplc/ d580504 FILE:

DN: LR CK: CW DW: DN CK: MT

STRAIN POLE DESCRIPTION	Pole Type	Foundation Type	Maximum Permissible Span Wire Load (N)
7,930 mm Pole	A	900-A	23,100
9,150 mm Pole	B	900-A	20,500
9,150 mm Pole with Lum.	B	900-A	19,600
9,150 mm Pole with 6,100 mm Mast Arm	C	900-B	24,900
9,150 mm Pole with 7,300 mm Mast Arm	C	900-B	24,500
9,150 mm Pole with 8,500 mm Mast Arm	C	900-B	23,600
9,150 mm Pole with 9,800 mm Mast Arm	C	900-B	22,700
9,150 mm Pole with 11,000 mm Mast Arm	C	900-B	21,400
9,150 mm Pole with 6,100 mm Mast Arm & Lum.	C	900-B	23,600
9,150 mm Pole with 7,300 mm Mast Arm & Lum.	C	900-B	23,100
9,150 mm Pole with 8,500 mm Mast Arm & Lum.	C	900-B	22,200
9,150 mm Pole with 9,800 mm Mast Arm & Lum.	C	900-B	21,400
9,150 mm Pole with 11,000 mm Mast Arm & Lum.	C	900-B	20,000
10,360 mm Pole	D	900-B	24,900
10,360 mm Pole with Lum.	D	900-B	24,000

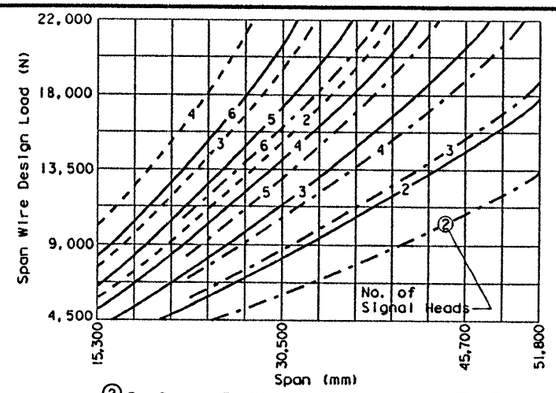

② SIGNALS WITH 300 mm LENS

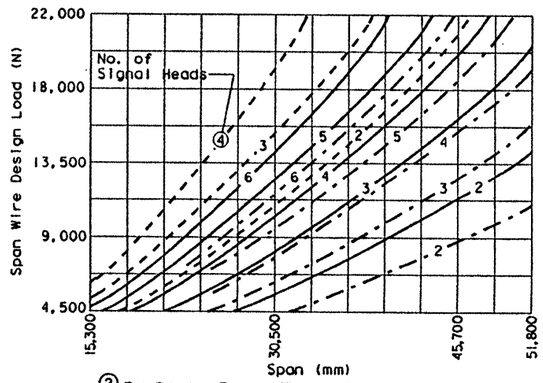

② SIGNALS WITH 200 mm LENS

② Numbers on charts indicate the number of signal heads on the span. The total span wire design load is based on one 5-section head and one or more additional 3-section head(s). Design wind pressures on cables are assumed as 15 N/m. Weight of span wire cables (one per signal head) is assumed as 9.5 N/m which includes an allowance for conductor cables and miscellaneous hardware. The effect of the sway cable on load distribution is ignored as it is assumed to break at design wind conditions. When a pole supports 2 spans, the span wire design loads for both spans should be added vectorially to determine the design load for that pole.

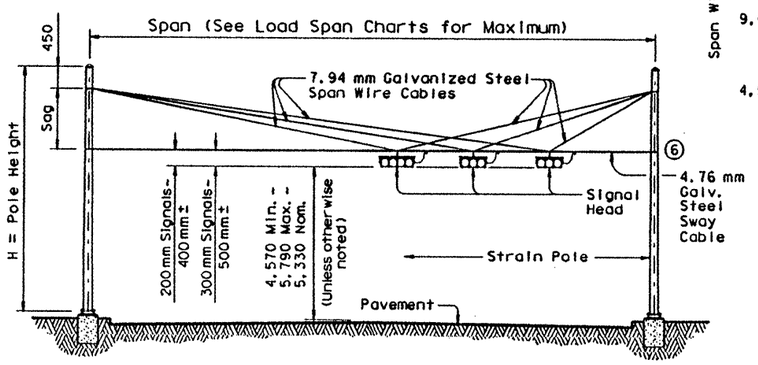

STRAIN POLE ELEVATIONS
HORIZONTAL SIGNALS

Signal Head Type	Mass Per Head	Wind Area ◆
5-Section, 300 mm Lens	57 kg	.892 m²
5-Section, 200 mm Lens	32 kg	.446 m²
3-Section, 300 mm Lens	34 kg	.524 m²
3-Section, 200 mm Lens	20 kg	.279 m²

◆ Effective projected design wind area (actual area times drag coefficient)

- - - - - - - - Sag = 1,370 mm (7,930 mm or 9,150 mm Pole)
———— Sag = 2,440 mm (9,150 mm or 10,360 mm Pole)
— · — · — · Sag = 3,500 mm (10,360 mm Pole)

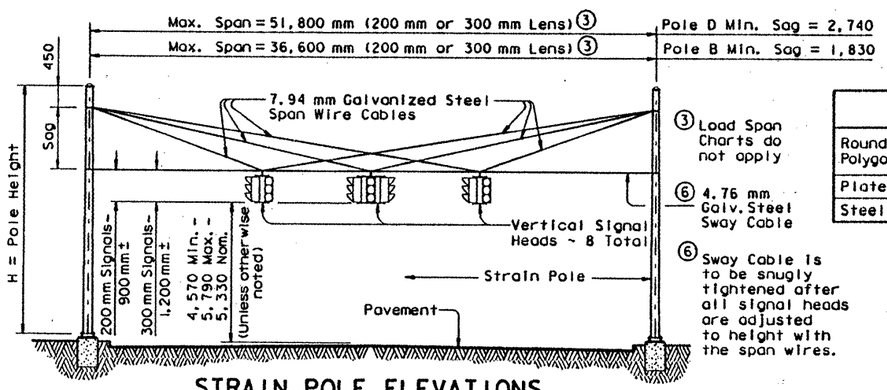

STRAIN POLE ELEVATIONS
VERTICAL SIGNALS
(Most arms are not used with vertical signals)

SHIPPING PARTS LIST

Poles (Without Traffic Signal Arm)

Pole Type	Strain poles with Luminaire: Ship each pole with the following hardware attached: handhole at base, pole cap, 2 clamp-on simplex and 1 pipe plug.			Strain poles without Luminaire: Ship each pole with the following hardware attached: handhole at base, pole cap and 1 pipe plug.		
	Description	Designation	Quantity	Description	Designation	Quantity
A				7,930 mm Strain Pole	SP 7,930 A-130	
B	9,150 mm Strain Pole	SPL 9,150 B-130		9,150 mm Strain Pole	SP 9,150 B-130	
D	10,360 mm Strain Pole	SPL 10,360 D-130		10,360 mm Strain Pole	SP 10,360 D-130	

Poles (With Traffic Signal Arm)

Pole Type	Strain poles with Luminaire: Ship each pole with the following hardware attached: handhole at base, pole cap, clamp-on simplex and 3 pipe plugs.			Strain poles without Luminaire: Ship each pole with the following hardware attached: handhole at base, pole cap and 3 pipe plugs.		
	Description	Designation	Quantity	Description	Designation	Quantity
C	9,150 mm SPw/TS Arm	SPL 9,150 C-130		9,150 mm SPw/TS Arm	SP 9,150 C-130	

Traffic Signal Arms (For Type C poles)

Nominal Arm Length	Type I Arm (1 Signal): Ship each Type I Arm with the following hardware attached: 2 CGB Connectors, 1 clamp with bolts and washers		Type II Arm (2 Signals): Ship each Type II Arm with the following hardware attached: 1 Bracket Assembly ①, 3 CGB Connectors and 1 clamp with bolts and washers		Type III Arm (3 Signals): Ship each Type III Arm with the following hardware attached: 2 Bracket Assemblies ①, 4 CGB Connectors and 1 clamp with bolts and washers	
mm	Designation	Quantity	Designation	Quantity	Designation	Quantity
6,100	6,100 I-130					
7,300	7,300 I-130		7,300 II-130			
8,500	8,500 I-130		8,500 II-130			
9,800			9,800 II-130		9,800 III-130	
11,000			11,000 II-130		11,000 III-130	

Anchor Bolt Assemblies (1 per pole)

Templates may be removed for shipment.

Anchor Bolt Diameter	Anchor Bolt Length	Quantity
1 ¾"	3'-10"	
2"	4'-3"	

Each Anchor Bolt Assembly consists of the following: Top and Bottom templates, 4 anchor bolts, 8 nuts, 8 flat washers, 4 lock washers and 4 nut anchor devices (Type 2) per Standard Drawing "TS-FD"(M).

Luminaire Arms

Nominal Arm Length	Quantity
2,440 mm Arm	

① Supply Option "A" unless otherwise noted. See Sheet "DMA-130(M)"

MATERIALS

Round Shafts or Polygonal Shafts	ASTM A595 GR A, ASTM A570M GR 345, ASTM A607 GR 50, ASTM A572M GR 345 or A36M MOD345
Plates ⑦	ASTM A36M OR A572M GR 345 OR A595 GR A OR A36M MOD345
Steel Cable	ASTM A475, 7 Wire, Utilities Grade

⑦ Any of the materials listed for plates may be used where the drawings do not specify a particular ASTM designation.

Pole Type	ROUND POLES D_B mm	ROUND POLES D_T mm	ROUND POLES (5)thk mm	ROUND POLES H mm	POLYGONAL POLES D_B mm	POLYGONAL POLES D_T mm	POLYGONAL POLES (5)thk mm	POLYGONAL POLES H mm
A	318	226	6.07	7,930	330	229	6.07	7,930
B	343	336	6.07	9,150	356	229	6.07	9,150
C	394	287	6.07	9,150	406	279	6.07	9,150
D	394	272	6.07	10,360	406	279	6.07	10,360

D_B = Pole Base O.D. D_T = Pole Top O.D. H = Pole Height

⑤ Thickness shown are minimum, thicker materials may be used.

Note: All dimensions are in millimeters (mm) except as noted.

SHEET 1 OF 2

Texas Department of Transportation
Traffic Operations Division

TRAFFIC SIGNAL SUPPORT STRUCTURES STRAIN POLE ASSEMBLIES

(130 km/h WIND ZONE)

SP-130(1)96(M)

FILE: SP80.DGN	DN: MS	CK: JSY	DW: BR	CK: JSY	NEG:
ORIG DATE: MARCH 1996	DIST	FED REG	FEDERAL AID PROJECT #		SHEET
REVISIONS JUNE 1996	15	6	CS2452-1-35		321
	COUNTY		CONTROL	SECT	JOB	HIGHWAY
	BEXAR		2452	101	035	LP1604

DISCLAIMER: Use of this standard is governed by the "Texas Engineering Practice Act". No warranty of any kind is made by TxDOT for any purpose whatsoever. TxDOT assumes no responsibility for the conversion of this standard to other formats or for incorrect results or damages resulting from its use.

LEVELS DISC

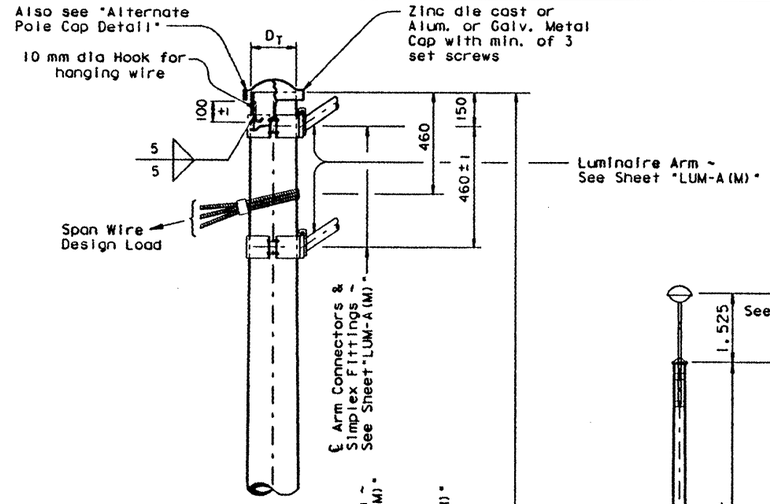

DETAIL A

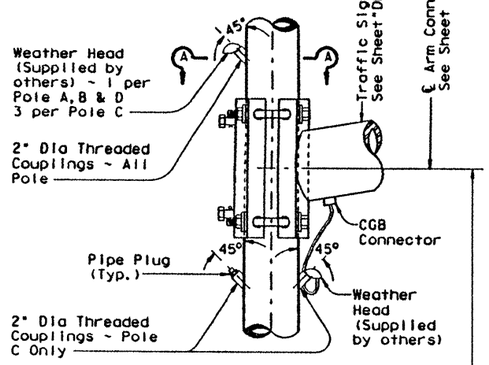

DETAIL B

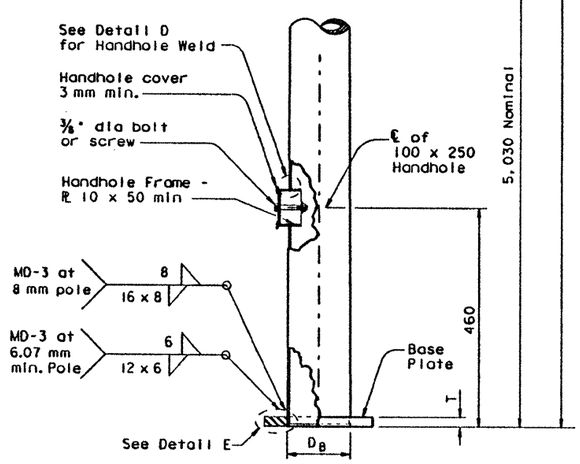

DETAIL C

POLE ELEVATION

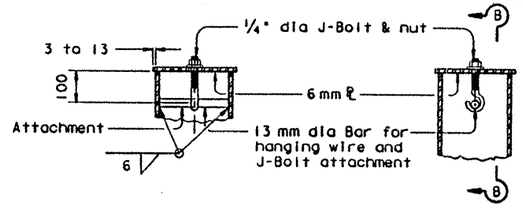

SECTION B-B

ALTERNATE POLE CAP DETAIL

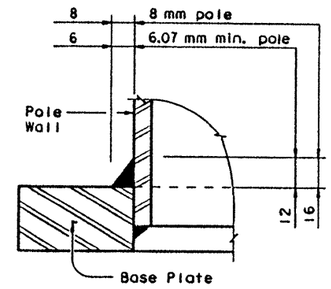

DETAIL E

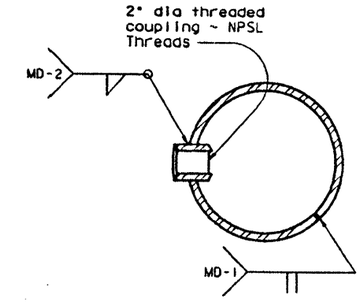

SECTION A-A

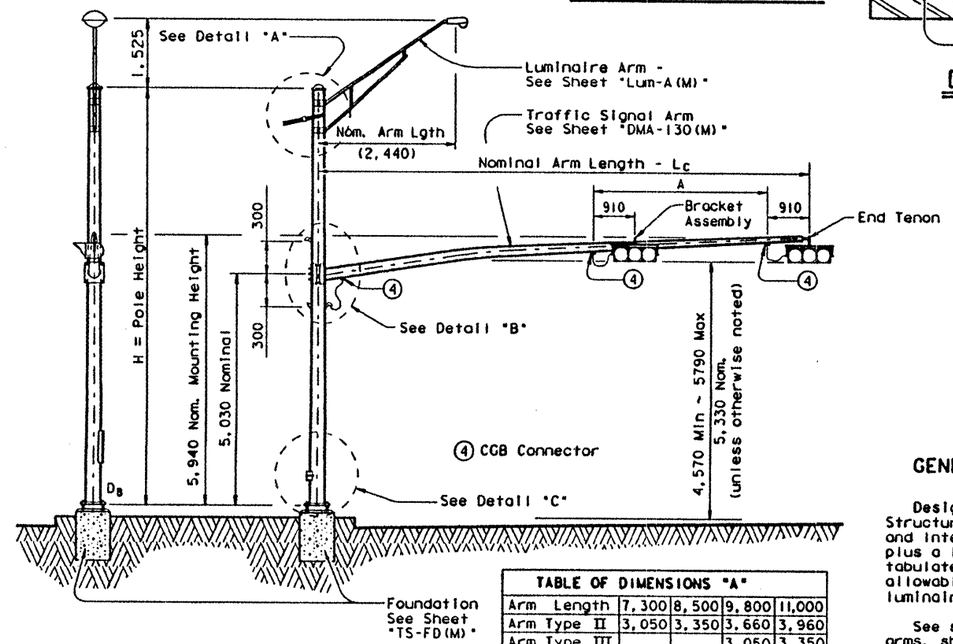

STRUCTURE ASSEMBLY

TABLE OF DIMENSIONS "A"				
Arm Length	7,300	8,500	9,800	11,000
Arm Type II	3,050	3,350	3,660	3,960
Arm Type III			3,050	3,350

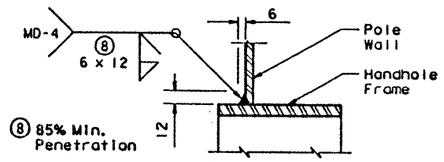

DETAIL D

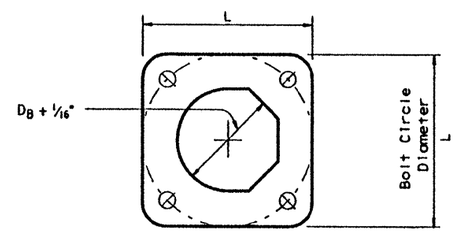

BASE PLATE PLAN

Foundation Type	Anchor Bolt Diameter	Bolt Hole Diameter	Bolt Circle Diameter	Base ℞ Dim. L x T
900-A	1 3/4"	2"	483	480 x 45
900-B	2"	2 1/4"	533	530 x 50

GENERAL NOTES:

Design conforms to 1994 AASHTO Standard Specifications for Structural Supports for Highway Signs, Luminaires, and Traffic Signals and Interim Specifications thereto. Design Wind Speed equals 130 km/h plus a 1.3 gust factor. The maximum permissible span wire design loads tabulated are calculated at a stress load of 1.4 times the basic allowable stress. A simultaneous wind on the pole, mast arm, and luminaire is also included.

See standard sheet "DMA-130(M)" for details of clamp-on traffic signal arms, sheet "MA-C(M)" for traffic signal arm connection details, sheet "LUM-A(M)" for luminaire arm and connection details, and sheet "TS-FD(M)" for anchor bolt and foundation details.

Fabrication shall be in accordance with the Specifications and with the details, dimensions, and weld procedures shown herein. Weld references call for preapproved weld procedures which the Fabricator must obtain prior to fabrication. Materials, fabrication tolerances, and shipping practices shall meet the requirements of this sheet and the Specifications.

Unless otherwise noted, all parts shall be galvanized in accordance with the Specifications.

Special designs require submission of shop drawings in accordance with the item "Steel Structures".

Note: All dimensions are in millimeters (mm) except as noted.

DISCLAIMER
The use of this standard is governed by the "Texas Engineering Practice Act". No warranty of any kind is made by TxDOT for any purpose whatsoever. TxDOT assumes no responsibility for the conversion of this standard to other formats or for incorrect results or damages resulting from its use.

LEVELS DISP

SHEET 2 OF 2

Texas Department of Transportation
Traffic Operations Division

TRAFFIC SIGNAL SUPPORT STRUCTURES STRAIN POLE ASSEMBLIES

(130 km/h WIND ZONE)

SP-130(2)96(M)

FILE: SP80.DGN	DN: WS	CK: JSY	DW: BR	CK: JSY	NEG:
ORIG DATE: MARCH 1996	DIST 15	FED REG 6	FEDERAL AID PROJECT CB2452-1-35		SHEET 322
REVISIONS JUNE 1996	COUNTY			CONTROL	SECT JOB HIGHWAY

Arm Length	ROUND POLES					POLYGONAL POLES					Foundation Type
	D_B	D_{19}	D_{24}	D_{30}	① thk	D_B	D_{19}	D_{24}	D_{30}	① thk	
mm	mm	mm	mm	mm	mm	mm	mm	mm	mm	mm	
6,100	267	198	180	160	4.55	292	216	196	173	4.55	750-A
7,300	279	211	193	173	4.55	305	229	208	185	4.55	750-A
8,500	292	224	206	185	4.55	318	241	221	198	4.55	750-A
9,800	318	249	231	211	4.55	305	229	208	185	6.07	750-A
11,000	292	224	206	185	6.07	318	241	221	198	6.07	750-A
12,200	305	236	218	198	6.07	343	267	246	224	6.07	900-A
13,400	318	249	231	211	6.07	356	279	259	236	6.07	900-A
14,600	330	262	244	224	6.07	381	305	285	262	6.07	900-A

Arm Length	ROUND ARMS					POLYGONAL ARMS				
	L_1	D_1	D_2	① thk	Rise	L_1	D_1	② D_2	① thk	Rise
mm	mm	mm	mm	mm	mm	mm	mm	mm	mm	mm
6,100	5,822	165	97	4.55	533	5,822	180	89	4.55	508
7,300	7,041	190	109	4.55	559	7,041	190	89	4.55	533
8,500	8,260	205	107	4.55	584	8,260	205	89	4.55	559
9,800	9,449	230	119	4.55	635	9,449	230	89	4.55	610
11,000	10,668	245	117	4.55	711	10,668	255	89	4.55	635
12,200	11,887	245	104	6.07	813	11,887	245	89	6.07	686
13,400	13,106	255	104	6.07	889	13,106	255	89	6.07	762
14,600	14,326	270	104	6.07	1,016	14,326	280	89	6.07	838

D_B = Pole Base O.D.
D_{19} = Pole Top O.D. with no Luminaire and no ILSN
D_{24} = Pole Top O.D. with ILSN w/out Luminaire
D_{30} = Pole Top O.D. with Luminaire
D_1 = Arm Base O.D.
D_2 = Arm End O.D.
L_1 = Short Length
L = Nominal Arm Length

① Thickness shown are minimums, thicker materials may be used.

② D_2 may be increased by up to 25 mm for polygonal arms.

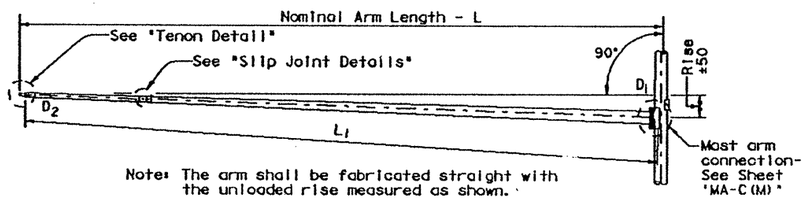

Note: The arm shall be fabricated straight with the unloaded rise measured as shown.

TRAFFIC SIGNAL ARM

(Fixed Mount)

VIBRATION WARNING

Mast Arms of approximately 12,200 mm or longer are subject to possible harmonic vertical vibrations in light wind conditions due to unusual combinations of signal numbers, weights or positions, arm-wind orientation, and arm-pole stiffness. Arms shall be visually inspected in 8 to 32 kmph wind conditions after signal head installation and, if vertical movements with a total excursion (max positive to max negative) of more than approximately 200 mm are observed at arm tip, damping devices or other means shall be fitted to the arm(s). The necessary damping device(s) or other remedial measures shall be as recommended by the fabricator. Excessive vibrations shall not be allowed to continue for more than two days.

TABLE OF DIMENSIONS "A"							
Arm Length	7,300	8,500	9,800	11,000	12,200	13,400	14,600
Arm Type II	3,050	3,350	3,660	3,960			
Arm Type III			3,050	3,350	3,660	3,660	3,660

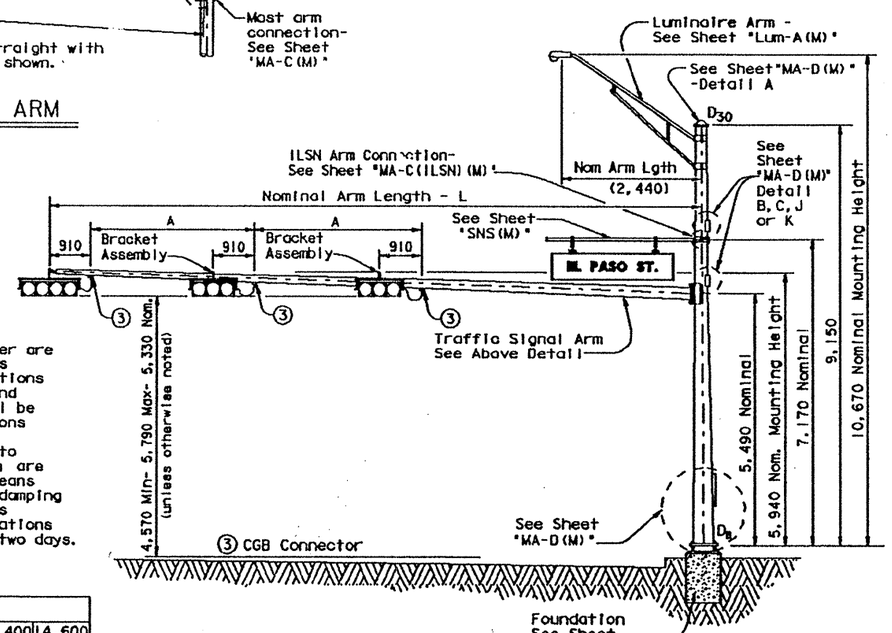

STRUCTURE ASSEMBLY

SHIPPING PARTS LIST

Ship each pole with the following attached: enlarged hand hole, pole cap, fixed-arm connection bolts and washers and any additional hardware listed in the table.

Nominal Arm Length	9,150 mm Poles With Luminaire		7,320 mm Poles With ILSN		5,800 mm Poles With No Luminaire and No ILSN	
	Above hardware plus: One (or two if ILSN attached) small hand hole, clamp-on simplex		Above hardware plus one small hand hole		See note above	
mm	Designation	Quantity	Designation	Quantity	Designation	Quantity
6,100	6,100L-130		6,100S-130		6,100-130	
7,300	7,300L-130		7,300S-130		7,300-130	
8,500	8,500L-130		8,500S-130		8,500-130	
9,800	9,800L-130		9,800S-130		9,800-130	
11,000	11,000L-130		11,000S-130		11,000-130	
12,200	12,200L-130		12,200S-130		12,200-130	
13,400	13,400L-130		13,400S-130		13,400-130	
14,600	14,600L-130		14,600S-130		14,600-130	

Traffic Signal Arms (1 per Pole) — Ship each arm with the listed equipment attached

Nominal Arm Length	Type I Arm (1 Signal)		Type II Arm (2 Signals)		Type III Arm (3 Signals)	
	1 CGB connector		1 Bracket Assembly and 2 CGB Connectors ④		2 Bracket Assemblies and 3 CGB Connectors ④	
mm	Designation	Quantity	Designation	Quantity	Designation	Quantity
6,100	6,100I-130					
7,300	7,300I-130		7,300II-130			
8,500	8,500I-130		8,500II-130			
9,800			9,800II-130		9,800III-130	
11,000			11,000II-130		11,000III-130	
12,200					12,200III-130	
13,400					13,400III-130	
14,600					14,600III-130	

Luminaire Arms (1 per 9,150 mm pole)

Nominal Arm Length	Quantity
2,440 mm Arm	

④ Supply Option "A" unless otherwise noted

ILSN Arm (Max. 2 per pole) Ship with clamps, bolts and washers

Nominal Arm Length	Quantity
2,140 mm Arm	
2,750 mm Arm	

Anchor Bolt Assemblies (1 per pole)

Anchor Bolt Diameter	Anchor Bolt Length	Quantity
1 ½"	3'-4"	
1 ¾"	3'-10"	

Each anchor bolt assembly consists of the following: Top and Bottom templates, 4 anchor bolts, 8 nuts, 8 flat washers, 4 lock washers and 4 nut anchor devices (Type 2) per Standard Drawing "TS-FD(M)".

Templates may be removed for shipment.

Note: All dimensions are in millimeters (mm) except as noted.

SHEET 1 OF 2

Texas Department of Transportation
Traffic Operations Division

TRAFFIC SIGNAL SUPPORT STRUCTURES

SINGLE MAST ARM ASSEMBLY

(130 KMPH WIND ZONE)

SMA-130(1)-96(M)

FILE: SMA-80.DGN	DN: MS	CK: JST	DW: MWF	CK: JST
ORIG DATE: AUGUST, 1995	DIST	FED REG	FEDERAL AID PROJECT #	SHEET
REVISIONS 5-96	15	6	CD2452-1-35	323
	COUNTY		CONTROL SECT JOB	HIGHWAY
	BEXAR		2452 01 035	LP1604

DISCLAIMER: The use of this standard is governed by the "Texas Engineering Practice Act". No warranty of any kind is made by TxDOT for any purpose whatsoever. TxDOT assumes no responsibility for the conversion of this standard to other formats or for incorrect results or damages resulting from its use.

LEVEL 1 2 3 4 5 6 7 8 9 | JAYED FOLDER 1 2 3 4 5 6 7 8 9 10 11 12 13 14 15 16 17 18 19 20 21 22 23 24 25 26 27 28 29 30 31 32 33 34 35 36 37 38 39 40 41 42 43 44 45 46 47 48 49 50 51 52 53 54 55 56 57 58 59 60 61 62 63 | ACC: d48r | uar/d482517 | LV=1.2 for English 1:3 for Metric

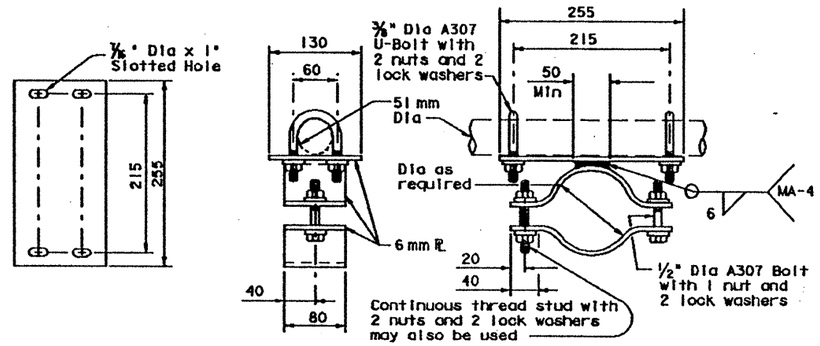

BRACKET ASSEMBLY DETAILS OPTION A

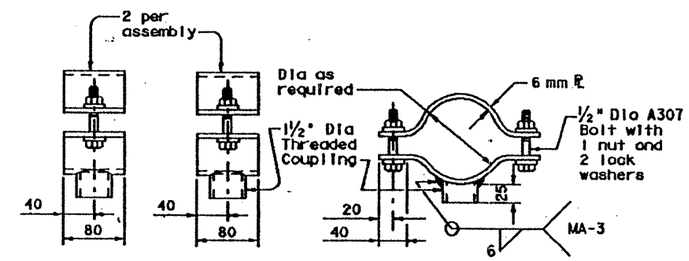

BRACKET ASSEMBLY DETAILS OPTION B

Stainless steel bands and cast bracket as in "Astro-Brac" with 1 1/2" Dia Threaded Coupling.

BRACKET ASSEMBLY OPTION C

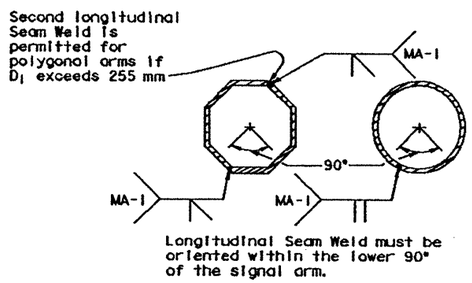

ARM WELD DETAIL

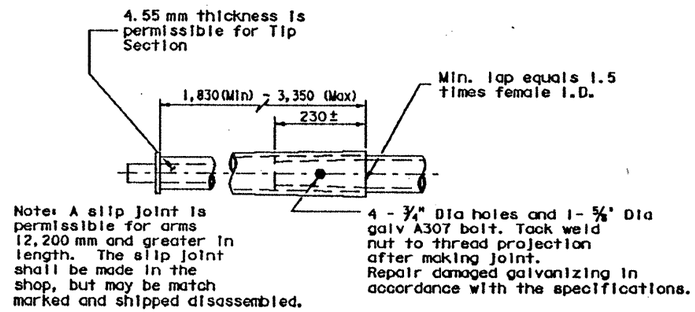

SLIP JOINT DETAIL

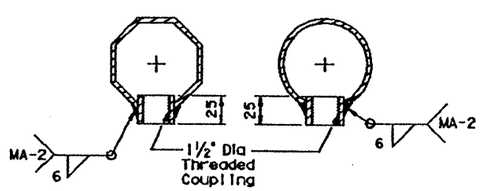

COUPLING DETAILS

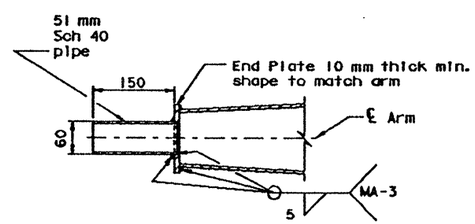

TENON DETAIL

GENERAL NOTES:

Design conforms to 1994 AASHTO Standard Specifications for Structural Supports for Highway Signs, Luminaires, and Traffic Signals and Interim Specifications thereto. Design Wind Speed equals 130 kmph plus a 1.3 gust factor.

Poles are designed to support one 2,440mm luminaire arm, one 2,750 mm internally lighted street name sign and one traffic signal arm with a length as tabulated. The specified luminaire load applied at the end of the luminaire arm equals 335 N vertical dead load plus the horizontal wind load on an effective projected area of 0.14 sq meter. The specified internally lighted street name sign load applied 1,400 mm from the centerline of the pole equals 378 N vertical dead load plus horizontal wind load on an effective projected area of 1.07 sq meter. The specified signal load applied at the end of the traffic signal arm equals 800 N vertical dead load plus the horizontal wind load on an effective projected area of 3.0 sq meter (actual area times drag coefficient).

See Standard Sheet "MA-D(M)" for pole details, "MA-C(M)" for traffic signal arm connection details, "MA-C (ILSN)(M)" for internally lighted street name sign arm connection details, "LUM-A(M)" for luminaire arm and connection details, "SNS(M)" for internally lighted street name sign details, and "TS-FD(M)" for anchor bolt and foundation details. See "MA-C(M)" for material specifications.

Fabrication shall be in accordance with the Specifications and with the details, dimensions, and weld procedures shown herein. Weld references call for preapproved weld procedures which the Fabricator must obtain prior to fabrication. Miscellaneous welds which do not call for preapproved weld procedures are nevertheless subject to rejection for poor workmanship. Materials, fabrication tolerances, and shipping practices shall meet the requirements of this sheet and the Specifications.

Unless otherwise noted, all parts shall be galvanized in accordance with the Specifications.

Special design require submission of shop drawings in accordance with the item 'Steel Structures'.

Note: All dimensions are in millimeters (mm) except as noted.

SHEET 2 OF 2

Texas Department of Transportation
Traffic Operations Division

TRAFFIC SIGNAL SUPPORT STRUCTURES

SINGLE MAST ARM ASSEMBLY

(130 KMPH WIND ZONE)

SMA-130(2)-96(M)

FILE: SMA-80.DGN	DN: MS	CK: JSY	DW: MAF	CK: JSY
ORIG DATE: AUGUST, 1995	DIST	FED RD	FEDERAL AID PROJECT	SHEET
REVISIONS 5-96	15	6	CD2452-1-35	324
	COUNTY		CONTROL / SECT / JOB	HIGHWAY
	BEXAR		2452 / 01 / 025	SP164

DISCLAIMER: The use of this standard is governed by the "Texas Engineering Practice Act". No warranty of any kind is made by TxDOT for any purpose whatsoever. TxDOT assumes no responsibility for the conversion of this standard to other formats or for incorrect results or damages resulting from its use.

LEVELS: 1 2 3 4 5 6 7 8 9 10 11 12 13 14 15 16 17 18 19 20 21 22 23 24 25 26 27 28 29 30 31 32 33 34 35 36 37 38 39 40 41 42 43 44 45 46 47 48 49 50 51 52 53 54 55 56 57 58 59 60 61 62 63

FED: 01 02 03 04 05 06 07 08 09 10 11 12 13 14 15 16 17 18 19 20 21 22 23 24 25 26 27 28 29 30 31 32 33 34 35 36 37 38 39 40 41 42 43 44 45 46 47 48 49 50 51 52 53 54 55 56 57 58 59 60 61 62 63

ACC: d48hpl(/d482517

LV=1.2 for English 1.3 for Metric

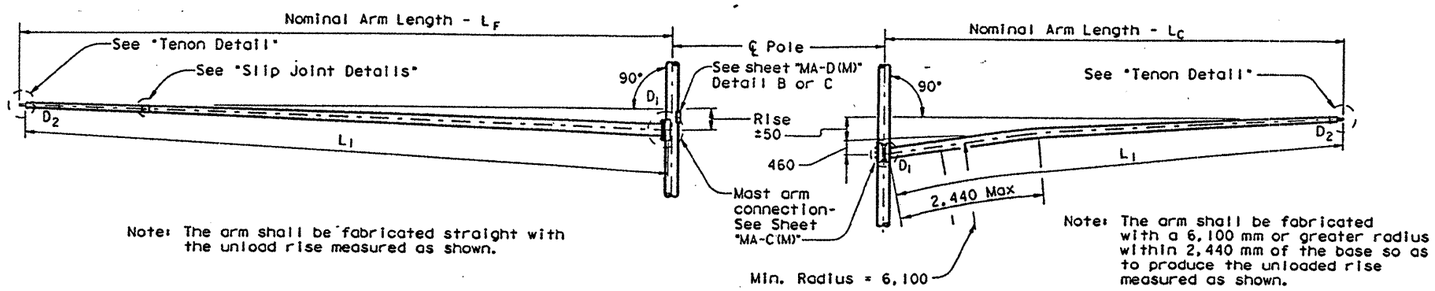

Note: The arm shall be fabricated straight with the unload rise measured as shown.

Note: The arm shall be fabricated with a 6,100 mm or greater radius within 2,440 mm of the base so as to produce the unloaded rise measured as shown.

FIXED MOUNT TRAFFIC SIGNAL ARM

CLAMP-ON TRAFFIC SIGNAL ARM

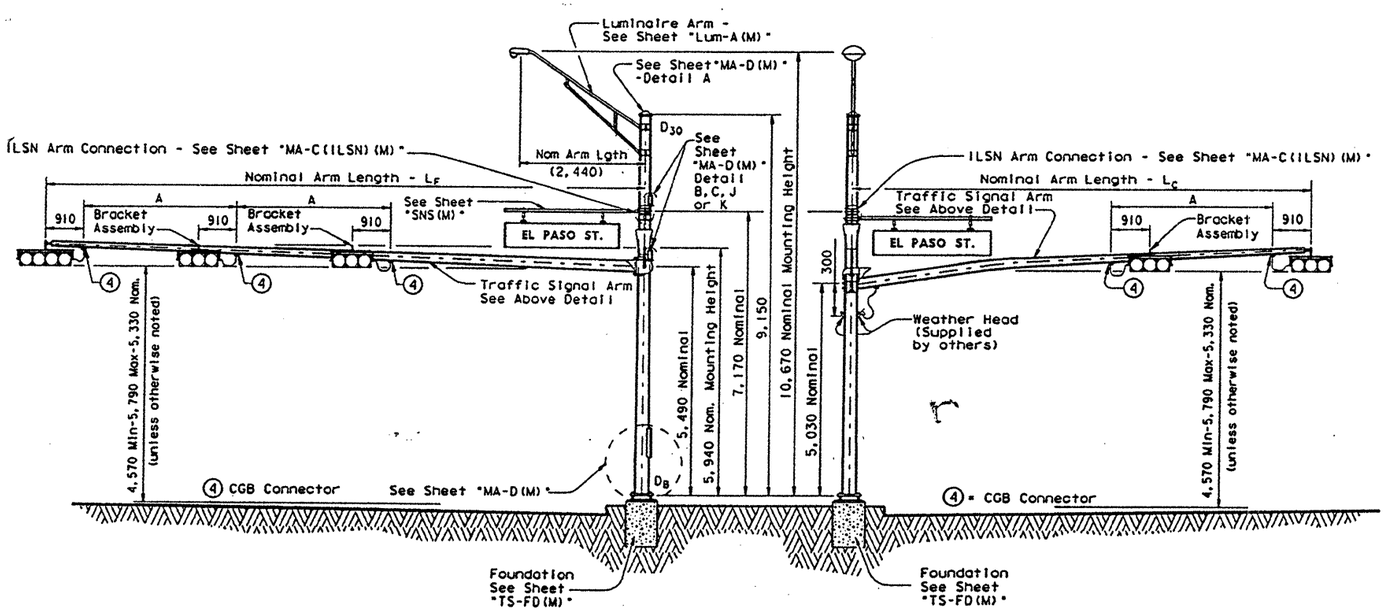

ELEVATION
(Showing fixed mount arm)

STRUCTURE ASSEMBLY

ELEVATION
(Showing clamp mount arm)

TABLE OF DIMENSIONS "A"						
Arm Length	7,300	8,500	9,800	11,000	12,200	13,400
Arm Type II	3,050	3,350	3,660	3,960		
Arm Type III			3,050	3,350	3,660	3,660

Note: All dimensions are in millimeters (mm) except as noted.

VIBRATION WARNING

Mast Arms of approximately 12,200 mm or longer are subject to possible harmonic vertical vibrations in light wind conditions due to unusual combinations of signal numbers, weights or positions, arm-wind orientation, and arm-pole stiffness.

Arms shall be visually inspected in 8 to 32 kmph wind conditions after signal head installation and, if vertical movements with a total excursion (max. positive to max. negative) of more than approximately 200 mm are observed at arm tip, damping devices or other means shall be fitted to the arm(s).

The necessary damping device(s) or other remedial measures shall be as recommended by the fabricator. Excessive vibrations shall not be allowed to continue for more than two days.

GENERAL NOTES:

Design conforms to 1994 AASHTO Standard Specifications for Structural Supports for Highway Signs, Luminaires, and Traffic Signals and Interim Specifications thereto. Design Wind Speed equals 130 kmph plus a 1.3 gust factor. Designs are based on an arm included angle of 90 degrees or more. Angles of less than approximately 75 degrees will require a special design.

Poles are designed to support one 2,440 mm luminaire arm, two 2,750 mm internally lighted street name signs and two traffic signal arms with length combinations as tabulated. The specified luminaire load applied at the end of luminaire arm equals 335 N vertical dead load plus the horizontal wind load on an effective projected area of 0.14 sq meter. The specified internally lighted street name sign applied 1,400 mm from the centerline of the pole equals 378 N vertical dead load plus the horizontal wind load on an effective projected area of 1.07 sq meter. The specified signal load applied at the end of the traffic signal arm equals 800 N vertical dead load plus the horizontal wind load on an effective projected area of 3.0 sq meter (actual area times drag coefficient).

See Standard Sheet "MA-D(M)" for pole details, "MA-C(M)" for traffic signal arm connection details, "MA-C (ILSN)(M)" for internally lighted street name sign arm connection details, "LUM-A(M)" for luminaire arm and connection details, "SNS(M)" for internally lighted street name sign details, and "TS-FD(M)" for anchor bolt and foundation details. See "MA-C(M)" for material specifications.

Fabrication shall be in accordance with the Specifications and with the details, dimensions, and weld procedures shown herein. Weld references call for preapproved weld procedures which the Fabricator must obtain prior to fabrication. Miscellaneous welds which do not call for preapproved weld procedures are nevertheless subject to rejection for poor workmanship. Material, fabrication tolerances, and shipping practices shall meet the requirements of this sheet and the Specifications.

Unless otherwise noted, all parts shall be galvanized in accordance with the Specifications.

Special designs require submission of shop drawings in accordance with the item "Steel Structures".

DISCLAIMER:
The use of this standard is governed by the "Texas Engineering Practice Act". No warranty of any kind is made by TxDOT for any purpose whatsoever. TxDOT assumes no responsibility for the conversion of this standard to other formats or for incorrect results or damages resulting from its use.

LEVELS

ACC: d48hp \sr/d482517

LV-1.2 for English 1.3 for Metric

SHEET 1 OF 3

Texas Department of Transportation
Traffic Operations Division

TRAFFIC SIGNAL SUPPORT STRUCTURES

DUAL MAST ARM ASSEMBLY

(130 KMPH WIND ZONE)

DMA-130 (1)-96 (M)

FILE: DMA-80.DGN	DN: MS	CK: JSY	DW: MMF	CK: JSY
ORIG DATE: AUGUST, 1995	DIST	FED REG	FEDERAL AID PROJECT	SHEET
REVISIONS 5-96	15	6		325
	COUNTY		CONTROL	SECT	JOB	HIGHWAY
	BEXAR		2452			

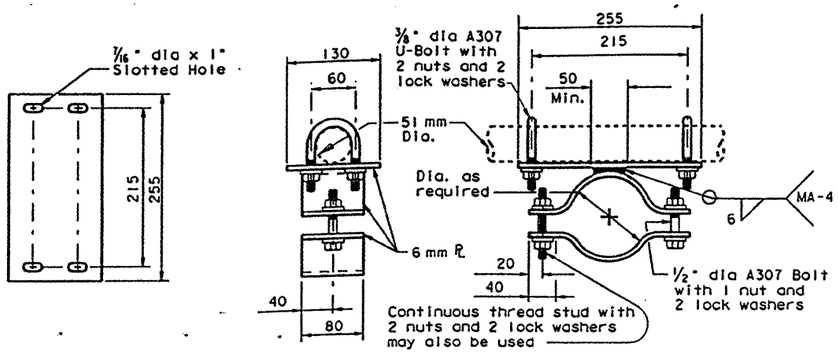

BRACKET ASSEMBLY DETAILS OPTION A

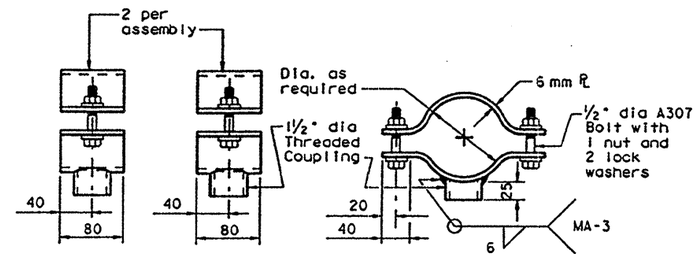

BRACKET ASSEMBLY DETAILS OPTION B

Stainless steel bands and cast bracket as in "Astro-Brac" with 1 1/2" dia Threaded Coupling.

BRACKET ASSEMBLY DETAILS OPTION C

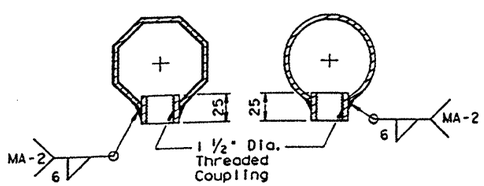

COUPLING DETAILS

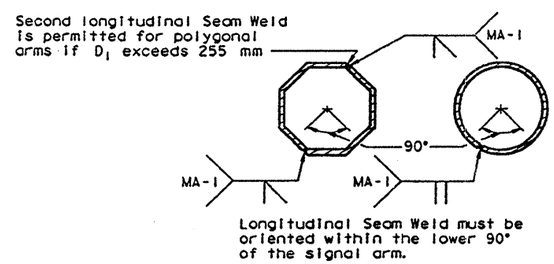

ARM WELD DETAIL

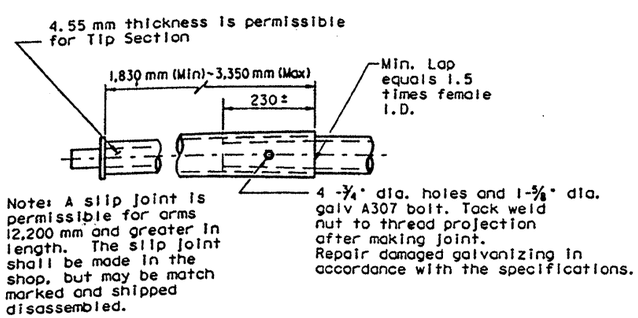

Note: A slip joint is permissible for arms 12,200 mm and greater in length. The slip joint shall be made in the shop, but may be match marked and shipped disassembled.

SLIP JOINT DETAIL

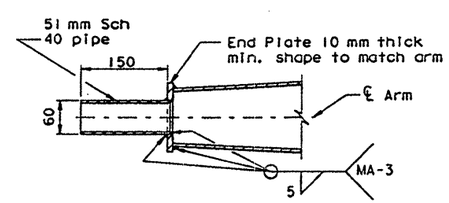

TENON DETAIL

Note: All dimensions are in millimeters (mm) except as noted.

SHEET 2 OF 3

Texas Department of Transportation
Traffic Operations Division

TRAFFIC SIGNAL SUPPORT STRUCTURES

DUAL MAST ARM ASSEMBLY (130 KMPH WIND ZONE)

DMA-130 (2)-96 (M)

FILE: DMA-80.DGN	DN: MS	CK: JSY	DW: MMF	CK: JSY			
ORIG DATE: AUGUST, 1995	DIST	FED REG	FEDERAL AID PROJECT				SHEET
REVISIONS 5-96	15	6					326
	COUNTY		CONTROL	SECT	JOB	HIGHWAY	

DISCLAIMER: The use of this standard is governed by the "Texas Engineering Practice Act". No warranty of any kind is made by TxDOT for any purpose whatsoever. TxDOT assumes no responsibility for the conversion of this standard to other formats or for incorrect results or damages resulting from its use.

ACC: d48hplq-/ /d482517
LV-1.2 for English for Metric

SHIPPING PARTS LIST

Ship each pole with the following attached: enlarged hand hole, pole cap, fixed arm connection bolts and washers and any additional hardware listed in the table.

Nominal Arm Length		9,150 mm Poles with Luminaire		7,320 mm Poles with ILSN		5,800 mm Poles with no Luminaire and no ILSN	
		See note above plus: one (or two if ILSN attached) small hand hole, clamp-on simplex		See note above plus one small hand hole		See note above	
LF	Lc						
mm	mm	Designation	Quantity	Designation	Quantity	Designation	Quantity
6,100	6,100	61006100L-130		61006100S-130		61006100-130	
7,300	6,100	73006100L-130		73006100S-130		73006100-130	
	7,300	73007300L-130		73007300S-130		73007300-130	
8,500	6,100	85006100L-130		85006100S-130		85006100-130	
	7,300	85007300L-130		85007300S-130		85007300-130	
	8,500	85008500L-130		85008500S-130		85008500-130	
9,800	6,100	98006100L-130		98006100S-130		98006100-130	
	7,300	98007300L-130		98007300S-130		98007300-130	
	8,500	98008500L-130		98008500S-130		98008500-130	
	9,800	98009800L-130		98009800S-130		98009800-130	
11,000	6,100	110006100L-130		110006100S-130		110006100-130	
	7,300	110007300L-130		110007300S-130		110007300-130	
	8,500	110008500L-130		110008500S-130		110008500-130	
	9,800	110009800L-130		110009800S-130		110009800-130	
	11,000	1100011000L-130		1100011000S-130		1100011000-130	
12,200	6,100	122006100L-130		122006100S-130		122006100-130	
	7,300	122007300L-130		122007300S-130		122007300-130	
	8,500	122008500L-130		122008500S-130		122008500-130	
	9,800	122009800L-130		122009800S-130		122009800-130	
	11,000	1220011000L-130		1220011000S-130		1220011000-130	
13,400	6,100	134006100L-130		134006100S-130		134006100-130	
	7,300	134007300L-130		134007300S-130		134007300-130	
	8,500	134008500L-130		134008500S-130		134008500-130	
	9,800	134009800L-130		134009800S-130		134009800-130	
	11,000	1340011000L-130		1340011000S-130		1340011000-130	

Traffic Signal Arms (Fixed Mount) (1 per pole) Ship each arm w/ the listed equipment attached

Nominal Arm Length	Type I Arm (1 Signal)		Type II Arm (2 Signals)		Type III Arm (3 Signals)	
	1 CGB connector		1 Bracket Assembly (1) and 2 CGB Connectors		2 Bracket Assemblies (1) and 3 CGB Connectors	
mm	Designation	Quantity	Designation	Quantity	Designation	Quantity
6,100	6,100I-130					
7,300	7,300I-130		7,300 II-130			
8,500	8,500I-130		8,500 II-130			
9,800			9,800 II-130		9,800 III-130	
11,000			11,000 II-130		11,000 III-130	
12,200					12,200 III-130	
13,400					13,400 III-130	

Traffic Signal Arms (Clamp-On Mount) (1 per pole) Ship each arm w/ the listed equipment attached

Nominal Arm Length	Type I Arm (1 Signal)		Type II Arm (2 Signals)		Type III Arm (3 Signals)	
	2 CGB connector and 1 clamp w/bolts and washers		1 Bracket Assembly (1), 3 CGB Connectors, and 1 clamp w/bolts and washers		2 Bracket Assemblies (1), 4 CGB Connectors, and 1 clamp w/bolts and washers	
mm	Designation	Quantity	Designation	Quantity	Designation	Quantity
6,100	6,100I-130					
7,300	7,300I-130		7,300 II-130			
8,500	8,500I-130		8,500 II-130			
9,800			9,800 II-130		9,800 III-130	
11,000			11,000 II-130		11,000 III-130	

Luminaire Arms (1 per 9,150 mm pole)

Nominal Arm Length	Quantity
2,440 mm Arm	

ILSN Arm (1 or 2 per pole) ship with clamps, bolts and washers

Nominal Arm Length	Quantity
2,140 mm Arm	
2,750 mm Arm	

Anchor Bolt Assemblies (1 per pole)

Anchor Bolt Diameter	Anchor Bolt Length	Quantity
1 ½"	3'-4"	
1 ¾"	3'-10"	
2"	4'-3"	

Each anchor bolt assembly consists of the following: Top and Bottom templates, 4 anchor bolts, 8 nuts, 8 flat washers, 4 lock washers and 4 nut anchor devices (Type 2) per Standard Drawing "TS-FD(M)".

Templates may be removed for shipment.

(1) Supply Option "A" unless otherwise noted

ARMS		ROUND POLES					POLYGONAL POLES					Foundation Type
LF	Lc	D_8	D_{19}	D_{24}	D_{30}	(2) thk	D_8	D_{19}	D_{24}	D_{30}	(2) thk	
mm	mm	mm	mm	mm	mm	mm	mm	mm	mm	mm	mm	
6,100	6,100	292	225	206	185	4.55	318	242	221	198	4.55	750-A
7,300	6,100	305	237	218	198	4.55	330	255	234	211	4.55	750-A
	7,300	305	237	218	198	4.55	330	255	234	211	6.07	750-A
8,500	6,100	318	250	231	211	4.55	305	229	208	185	6.07	750-A
	7,300	318	250	231	211	4.55	305	229	208	185	6.07	750-A
	8,500	330	263	244	224	4.55	318	242	221	198	6.07	750-A
9,800	6,100	330	263	244	224	4.55	318	242	221	198	6.07	750-A
	7,300	330	263	244	224	4.55	318	242	221	198	6.07	750-A
	8,500	305	237	218	198	6.07	330	255	234	211	6.07	750-A
	9,800	305	237	218	198	6.07	343	267	246	224	6.07	900-A
11,000	6,100	305	237	218	198	6.07	343	267	246	224	6.07	900-A
	7,300	305	237	218	198	6.07	343	267	246	224	6.07	900-A
	8,500	318	250	231	211	6.07	343	267	246	224	6.07	900-A
	9,800	318	250	231	211	6.07	343	267	246	224	6.07	900-A
	11,000	318	250	231	211	6.07	356	280	259	236	6.07	900-A
12,200	6,100	318	250	231	211	6.07	356	280	259	236	6.07	900-A
	7,300	318	250	231	211	6.07	356	280	259	236	6.07	900-A
	8,500	330	263	244	224	6.07	356	280	259	236	6.07	900-A
	9,800	330	263	244	224	6.07	381	305	285	262	6.07	900-A
	11,000	343	275	257	236	6.07	381	305	285	262	6.07	900-A
13,400	6,100	343	275	257	236	6.07	381	305	285	262	6.07	900-A
	7,300	343	275	257	236	6.07	381	305	285	262	6.07	900-A
	8,500	343	275	257	236	6.07	381	305	285	262	6.07	900-A
	9,800	356	288	269	249	6.07	394	318	297	274	6.07	900-B
	11,000	356	288	269	249	6.07	394	318	297	274	6.07	900-B

Arm LF or Lc	ROUND ARMS					POLYGONAL ARMS				
	L_1	D_1	D_2	(2) thk	Rise	L_1	D_1	(3) D_2	(2) thk	Rise
mm	mm	mm	mm	mm		mm	mm	mm	mm	
6,100	5,822	165	97	4.55	533	5,822	180	89	4.55	508
7,300	7,041	190	109	4.55	559	7,041	190	89	4.55	533
8,500	8,260	205	107	4.55	584	8,260	205	89	4.55	559
9,800	9,449	230	119	4.55	635	9,449	230	89	4.55	610
11,000	10,668	245	117	4.55	711	10,668	255	89	4.55	635
12,200	11,887	245	104	6.07	813	11,887	245	89	6.07	686
13,400	13,106	255	104	6.07	889	13,106	255	89	6.07	762

D_8 = Pole Base O.D.
D_{19} = Pole Top O.D. with no Luminaire and no ILSN
D_{24} = Pole Top O.D. with ILSN w/out Luminaire
D_{30} = Pole Top O.D. with Luminaire

D_1 = Arm Base O.D.
D_2 = Arm End O.D.
L_1 = Shaft Length
L_F = Fixed Arm Length
L_C = Clamp-on Arm Length (11,000 mm max)

(2) Thickness shown are minimums, thicker materials may be used.

(3) D_2 may be increased by up to 25 mm for polygonal arms.

Note: All dimensions are in millimeters (mm) except as noted.

SHEET 3 OF 3

Texas Department of Transportation
Traffic Operations Division

TRAFFIC SIGNAL SUPPORT STRUCTURES

DUAL MAST ARM ASSEMBLY

(130 KMPH WIND ZONE)

DMA-130 (3)-96 (M)

FILE: DMA-80.DGN	DN: MS	CK: JSY	DW: WMF	CK: JSY
ORIG DATE: AUGUST, 1995	DIST	FED REG	FEDERAL AID PROJECT	SHEET
REVISIONS 5-96	15	6	0.2452-1-35	327
	COUNTY		CONTROL / SECT / JOB	HIGHWAY
	DEWITT		2452 / 01 / 035	VARIOUS

DISCLAIMER:
The use of this standard is governed by the "Texas Engineering Practice Act". No warranty of any kind is made by TxDOT for any purpose whatsoever. TxDOT assumes no responsibility for the conversion of this standard to other formats or for incorrect results or damages resulting from its use.

LEVELS 1 2 3 4 5 6 7 8 9 10 11 12 13 14 15 16 17 18 19 20 21 22 23 24 25 26 27 28 29 30 31 32 33 34 35 36 37 38 39 40 41 42 43 44 45 46 47 48 49 50 51 52 53 54 55 56 57 58 59
TO 1 2 3 4 5 6 7 8 9 10 11 12 13 14 15 16
ACC: d48hpl /d482517
LV=1.2 for English, ..3 for Metric

ARM SIZE D_1 mm	‡ mm	A mm	B mm	C mm	D mm	E mm	CONN BOLT DIA in.
165	4.55	305	229	229	152	25	1
190	4.55	330	229	254	152	25	1
205	4.55	356	254	279	178	32	1 1/4
230	4.55	406	279	330	203	32	1 1/4
240	4.55	432	305	356	229	32	1 1/4
240	6.07	457	305	381	229	32	1 1/4
255	6.07	457	305	381	229	32	1 1/4
265	6.07	457	330	381	254	38	1 1/2
280	6.07	457	330	381	254	38	1 1/2

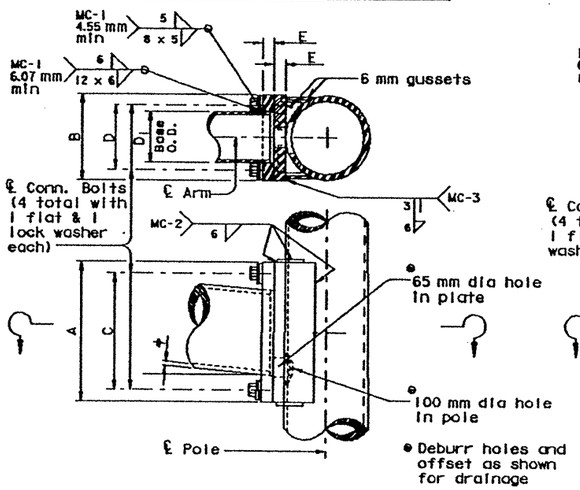

FIXED MOUNT DETAIL 1

ARM SIZE D_1 mm	‡ mm	A mm	F mm	CONN. BOLTS No. ea.	CONN. BOLTS Dia in.	PIN BOLTS No. ea.	PIN BOLTS Dia in.
165	4.55	305	203	4	*7/8	2	5/8
190	4.55	356	203	4	1	2	5/8
205	4.55	356	203	4	1	2	5/8
230	4.55	406	254	4	1	2	5/8
240	4.55	457	305	4	1 1/4	3	5/8
240	6.07	457	305	4	1 1/4	3	5/8
255	6.07	457	305	4	1 1/4	3	5/8

*1" Dia connection bolts are permissible

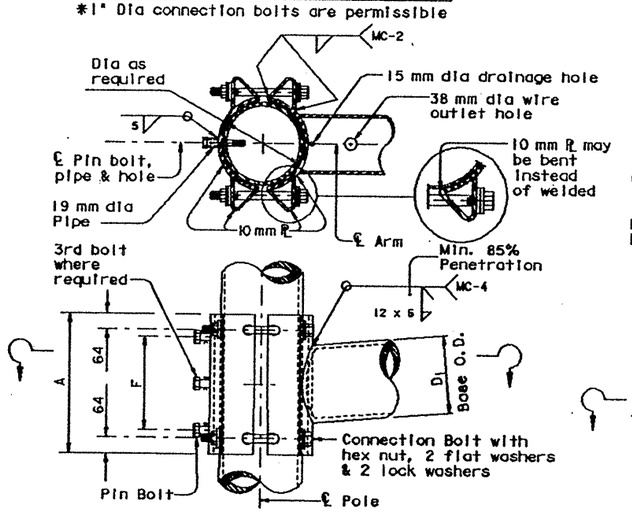

CLAMP-ON DETAIL 1

ARM SIZE D_1 mm	‡ mm	A mm	B mm	C mm	D mm	E mm	CONN BOLT DIA in.
180	4.55	279	279	203	203	32	1 1/4
190	4.55	279	279	203	203	32	1 1/4
205	4.55	279	279	203	203	32	1 1/4
230	4.55	330	330	254	254	32	1 1/4
255	4.55	330	330	254	254	32	1 1/4
240	6.07	330	330	254	254	32	1 1/4
255	6.07	356	356	279	279	38	1 1/2
280	6.07	356	356	279	279	38	1 1/2
290	6.07	356	356	279	279	38	1 1/2

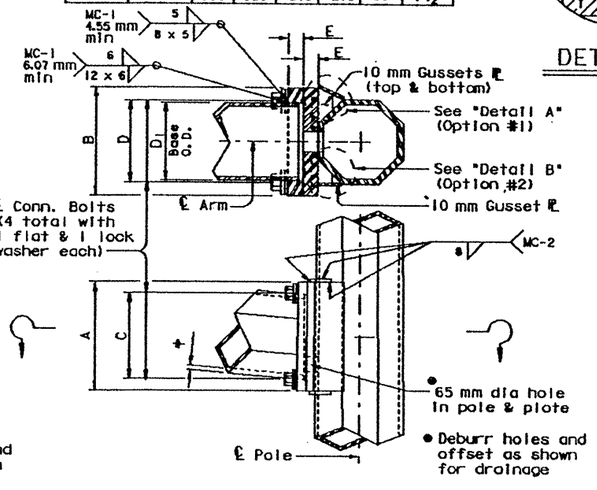

FIXED MOUNT DETAIL 2

ARM SIZE D_1 mm	‡ mm	A mm	F mm	T mm	CONN. BOLTS No. ea.	CONN. BOLTS Dia in.	PIN BOLTS No. ea.	PIN BOLTS Dia in.
180	4.55	305	203	19	4	3/4	2	5/8
190	4.55	356	203	19	4	3/4	2	5/8
205	4.55	356	203	19	4	3/4	2	5/8
230	4.55	406	254	22	4	1	2	5/8
255	4.55	457	254	22	4	1	2	5/8
240	6.07	457	254	25	6	1	3	5/8
255	6.07	457	254	25	6	1	3	5/8

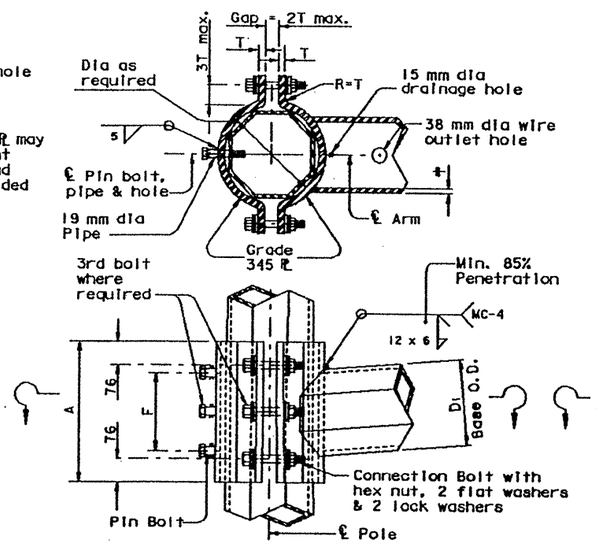

CLAMP-ON DETAIL 2

ARM SIZE D_1 mm	‡ mm	A mm	F mm	CONN. BOLTS No. ea.	CONN. BOLTS Dia in.	PIN BOLTS No. ea.	PIN BOLTS Dia in.
165	4.55	305	203	4	1	2	5/8
190	4.55	356	203	4	1	2	5/8
205	4.55	356	203	4	1	2	5/8
230	4.55	406	254	4	1	2	5/8
240	4.55	457	305	6	1	3	5/8
240	6.07	457	305	6	1	3	5/8
255	6.07	457	305	6	1	3	5/8

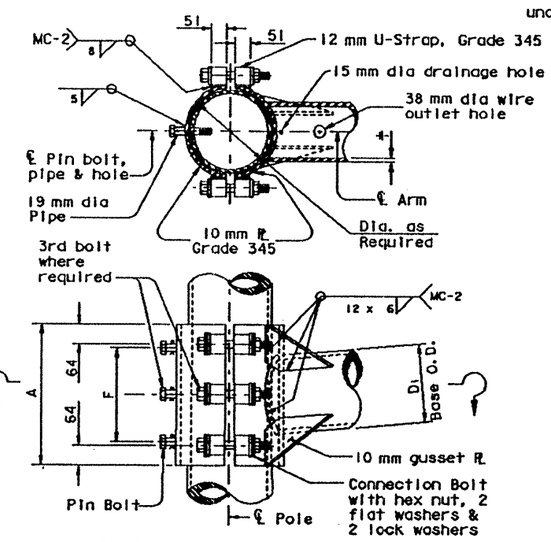

CLAMP-ON DETAIL 3

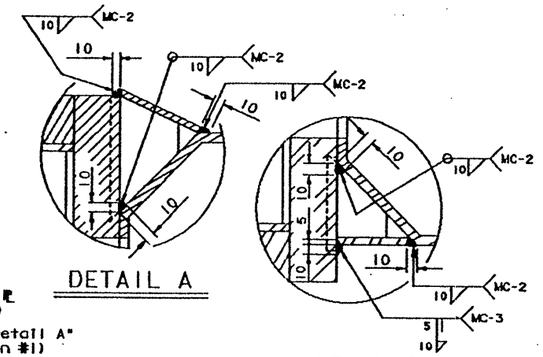

DETAIL A

DETAIL B

MATERIALS	
Round Shafts or Polygonal Shafts	ASTM A595 GR A, ASTM A570M GR 345, ASTM A607 GR 50, ASTM A572M GR 345 or A36M MOD345
Plates (1)	ASTM A36M OR A572M GR345 OR A595(2) OR A36M MOD345
Connection Bolts	ASTM A325M except where noted
Pin Bolts	ASTM A325M
Pipe	ASTM A53 GR A or B, OR A501
Misc. Hardware	Galvanized steel or stainless steel or as noted

(1) Any of the materials listed for plates may be used where the drawings do not specify a particular Grade designation.

(2) If A 595 material is used, it need not be cold worked to A 595 requirments, but material must have 276 MPa minimum yield prior to fabrication.

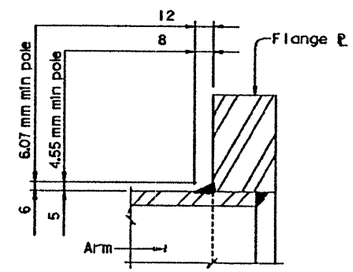

FIXED MOUNT ARM

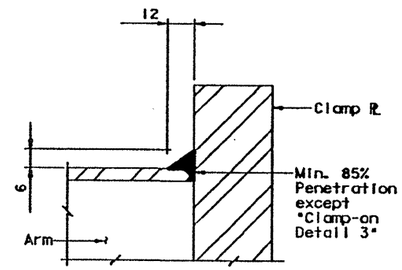

CLAMP-ON ARM

ARM BASE WELD DETAILS

GENERAL NOTES:

Clamp-on details are used for the second arm on dual mast arm assemblies. A Maximum 38 mm wide vertical slotted hole may be cut in the front clamp plate to facilitate drainage during galvanizing. The slot shall be centered behind the arm and shall be no longer than the arm diameter minus 25 mm.

Fixed mount details are used for single mast arm assemblies and for the first arm on dual mast arm assemblies.

Where duplicate parts occur on a detail, welds shown for one part shall apply to all similar parts on the detail.

Pin bolts are required to prevent rotation of clamp-on arms under design wind forces.

NOTE:

Pin bolts shall be A325M with threads excluded from the shear plane. Pin bolt and 19 mm dia pipe shall have 5 mm dia holes for a 3 mm dia galvanized cotter pin. Back clamp plate shall be furnished with a 7/4" dia hole for each pin bolt. An 11/16" dia hole for each pin bolt shall be field drilled through the pole after arm orientations have been approved by the Engineer.

NOTE: All dimensions are in millimeters (mm) except as noted.

DISCLAIMER:
The use of this standard is governed by the "Texas Engineering Practice Act". No warranty of any kind is made by TxDOT for any purpose whatsoever. TxDOT assumes no responsibility for the conversion of this standard to other formats or for incorrect results or damages resulting from its use.

Texas Department of Transportation
Traffic Operations Division

STANDARD ASSEMBLY FOR TRAFFIC SIGNAL SUPPORT STRUCTURES

MAST ARM CONNECTIONS

MA-C-96 (M)

FILE: MA-C.DGN	DN: MS	CK: JSY	DW: MAF	CK: JSY
©1998 DATE: AUGUST, 1995	DIST	FED. RD.	FEDERAL AID PROJECT	SHEET
REVISIONS 5-96	15	6	CD2452-1-35	328
	COUNTY		CONTROL / SECT / JOB	HIGHWAY
	BEXAR		2452 / 01 / 035	LP1604

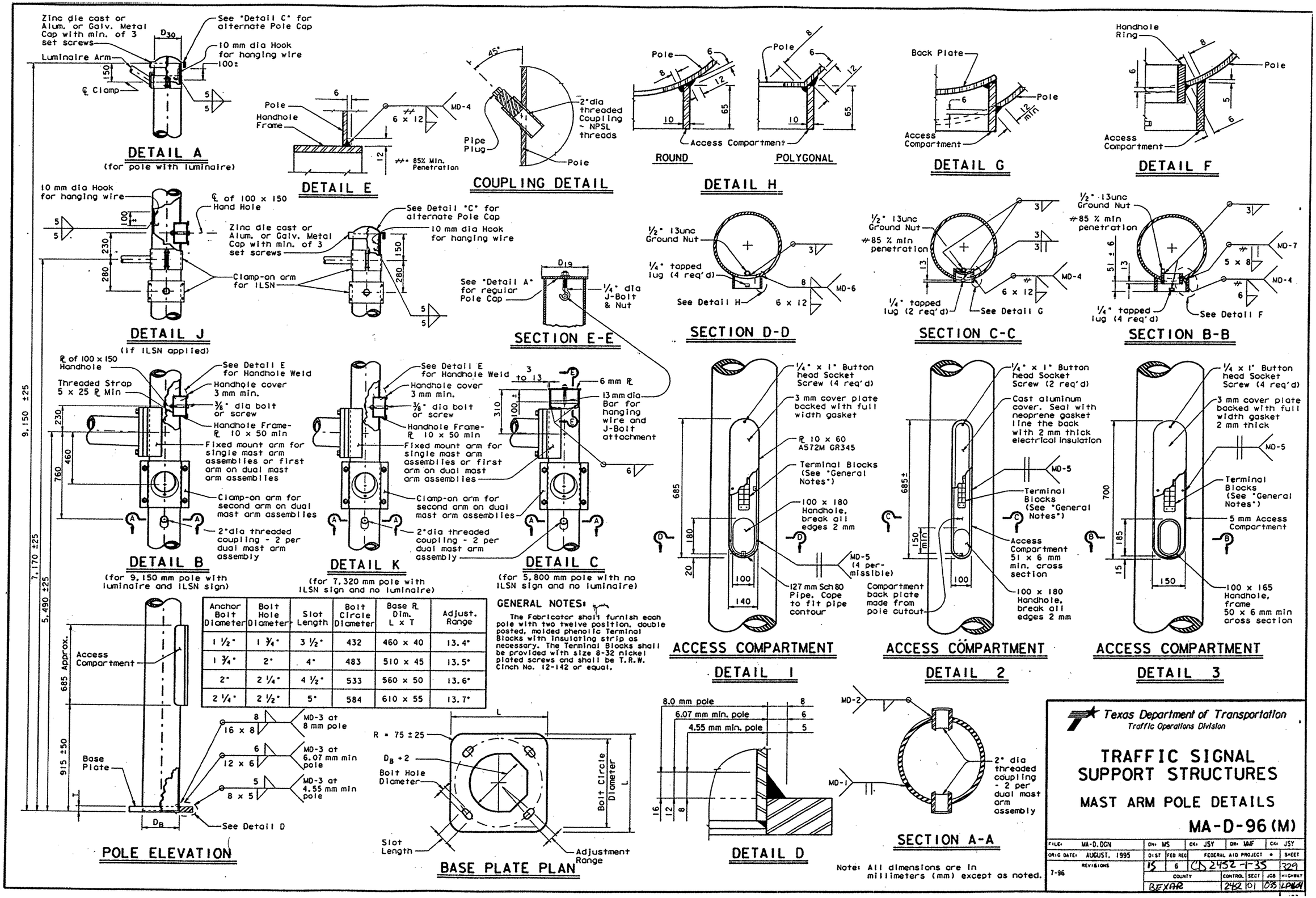

Anchor Bolt Diameter	Bolt Hole Diameter	Slot Length	Bolt Circle Diameter	Base ℞ Dim. L x T	Adjust. Range
1 1/2"	1 3/4"	3 1/2"	432	460 x 40	13.4"
1 3/4"	2"	4"	483	510 x 45	13.5"
2"	2 1/4"	4 1/2"	533	560 x 50	13.6"
2 1/4"	2 1/2"	5"	584	610 x 55	13.7"

GENERAL NOTES:

The Fabricator shall furnish each pole with two twelve position, double posted, molded phenolic Terminal Blocks with insulating strip as necessary. The Terminal Blocks shall be provided with size 8-32 nickel plated screws and shall be T.R.W. Cinch No. 12-142 or equal.

Note: All dimensions are in millimeters (mm) except as noted.

Texas Department of Transportation
Traffic Operations Division

TRAFFIC SIGNAL SUPPORT STRUCTURES

MAST ARM POLE DETAILS

MA-D-96 (M)

FILE: MA-D.DGN	DN: MS	CK: JSY	DW: MAF	CK: JSY
ORIG DATE: AUGUST, 1995	DIST	FED REG	FEDERAL AID PROJECT	SHEET
REVISIONS 7-96	15	6	CD 2452-1-35	329
COUNTY	CONTROL	SECT	JOB	HIGHWAY
BEXAR	242	01	035	LP 1604

DISCLAIMER
The use of this standard is governed by the "Texas Engineering Practice Act". No warranty of any kind is made by TxDOT for any purpose whatsoever. TxDOT assumes no responsibility for the conversion of this standard to other formats or for incorrect results or damages resulting from its use.

LEVELS	DATE:
1 2 3 4 5 6 7 8	DN:
9 10 11 12 13 14 15 16	CK:
17 18 19 20 21 22 23 24	DW:
25 26 27 28 29 30 31 32	CK:
33 34 35 36 37 38 39 40	ACC:
41 42 43 44 45 46 47 48	FILE:
49 50 51 52 53 54 55 56	
57 58 59 60 61 62 63 64	

⑧ Oversized Drilled Shafts may be used to accommodate existing equipment.

FOUNDATION DESIGN TABLE

FDN TYPE	⑧ DRILLED SHAFT DIA	REINFORCING STEEL		DRILL SHAFT LENGTH-m ④, ⑤, ⑥			ANCHOR BOLT DESIGN ①				FOUNDATION DESIGN LOAD ②		TYPICAL APPLICATION
		VERT BARS	SPIRAL & PITCH	TX CONE PENETROMETER N blows/300 mm			ANCHOR BOLT DIA	Fy (MPa)	BOLT CIR DIA	ANCHOR TYPE	MOMENT kN•m	SHEAR kN	
				10	15	40							
600-A	600	4- #5	#2 at 300	1.7	1.6	1.4	¾"	250	324	1	14	4	Pedestal pole, pedestal mounted controller.
750-A	750	8- #9	#3 at 150	3.4	3.1	2.4	1 ½"	380	432	2	118	13	Mast arm assembly. (see Selection Table)
900-A	900	10- #9	#3 at 150	4.0	3.7	2.9	1 ¾"	380	483	2	178	22	Mast arm assembly. (see Selection Table) 9150 mm strain pole with or w/out luminaire.
900-B	900	12- #9	#3 at 150	4.6	4.1	3.2	2"	380	533	2	258	31	Mast arm assembly. (see Selection Table) Strain pole taller than 9150 mm & strain pole with mast arm
1050-A	1050	14- #9	#3 at 150	5.3	4.8	3.6	2 ¼"	380	584	2	367	40	Mast arm assembly. (see Selection Table)

NOTES:

① Anchor bolt design develops the foundation capacity given under Foundation Design Loads.

② Foundation Design Loads are the allowable moments and shears at the base of the structure.

③ Foundations may be listed seperately or grouped according to similarity of location and type. Quantities are for the Contractor's information only.

④ Field Penetrometer readings at a depth of approximately 900 to 1500 mm may be used to adjust shaft lengths.

⑤ If rock is encountered, the Drilled Shaft shall extend a minimum of two diameters into solid rock.

⑥ Decimal lengths in Design Table are to allow interpolation for other penetrometer values. Round to nearest 0.1 m for entry into Summary Table.

FOUNDATION SUMMARY TABLE ③

LOCATION IDENTIFICATION	AVG. N BLOW (per 300 mm)	FDN TYPE	NO. EA	DRILLED SHAFT LENGTH ⑥ (m)				
				600-A	750-A	900-A	900-B	1050-A
TOTAL DRILLED SHAFT LENGTHS								

FOUNDATION SELECTION TABLE FOR STANDARD MAST ARM PLUS ILSN SUPPORT ASSEMBLIES (mm)

		FDN 750-A	FDN 900-A	FDN 900-B	FDN 1050-A
130 km/h DESIGN WIND SPEED	MAX SINGLE ARM LENGTH	11,000	14,600		
	MAXIMUM DOUBLE ARM LENGTH COMBINATIONS	7,300 X 7,300			
		8,500 X 8,500			
		9,800 X 8,500	9,800 X 9,800		
			11,000 X 11,000		
			12,200 X 11,000		
			13,400 X 8,500	13,400 X 11,000	
160 km/h DESIGN WIND SPEED	MAX SINGLE ARM LENGTH	7,300	11,000	13,400	
	MAXIMUM DOUBLE ARM LENGTH COMBINATIONS		7,300 X 7,300		
			8,500 X 8,500		
			9,800 X 7,300	9,800 X 9,800	
				11,000 X 11,000	
				12,200 x 7,300	12,200 X 11,000
					13,400 x 11,000

EXAMPLE:

For 130 km/h design wind speed, foundation 750-A can support up to a 9750 mm arm with another arm up to 8530 mm.

For 160 km/h design wind speed, foundation 900-A can support a single 10,970 mm mast arm.

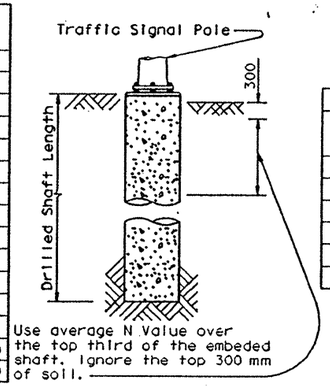

ANCHOR BOLT & TEMPLATE SIZES

BOLT DIA	⑦ BOLT LENGTH	TOP THREAD	BOTT THREAD	BOLT CIRCLE	R2	R1
¾"	1'-6"	3"	—	324	181	143
1 ½"	3'-4"	6"	2"	432	254	178
1 ¾"	3'-10"	7"	2 ¼"	483	286	197
2"	4'-3"	8"	2 ½"	533	318	216
2 ¼"	4'-9"	9"	3"	584	349	235

⑦ Min dimensions given, longer bolts are acceptable.

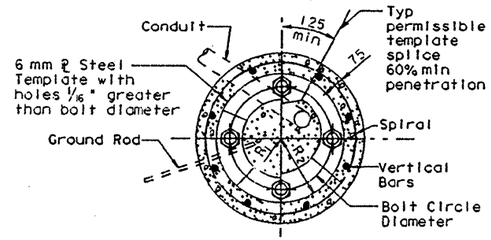

R_1 may equal R_2 if plate is welded of 3 or more segments.

TOP VIEW

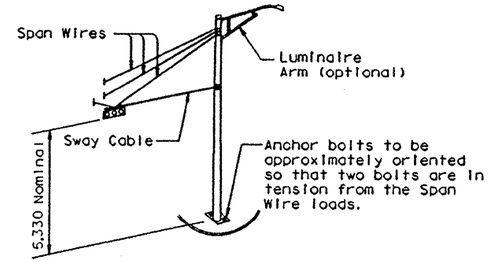

TYPICAL STRAIN POLE ASSEMBLY

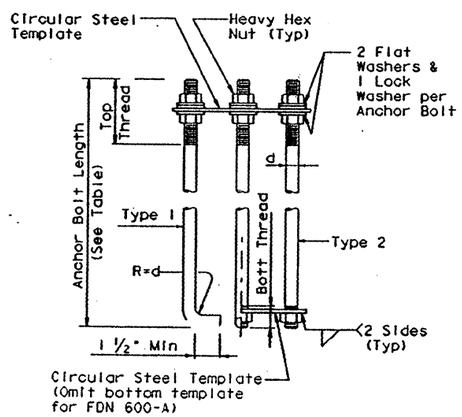

HOOKED ANCHOR (TYPE 1) | NUT ANCHOR (TYPE 2)

ANCHOR BOLT ASSEMBLY

INSTALLATION PROCEDURE:

Threads of anchor bolts shall be coated with pipe joint compound prior to installation of upper nuts when erecting pole. After pole is plumbed and in permanent alignment, the exposed threads of painted bolts shall be cleaned and an additional coating of zinc-rich paint applied to seal the bolt thread-nut joint.

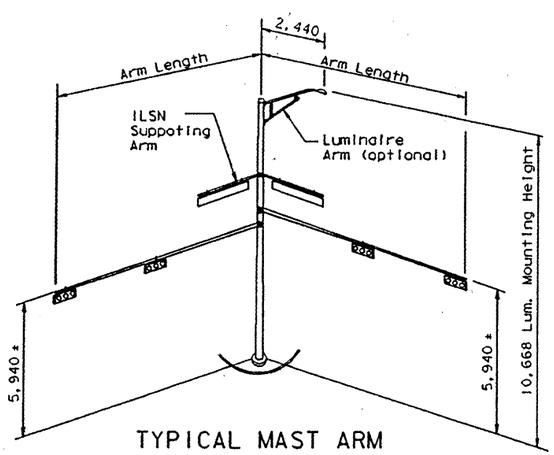

TYPICAL MAST ARM ASSEMBLY

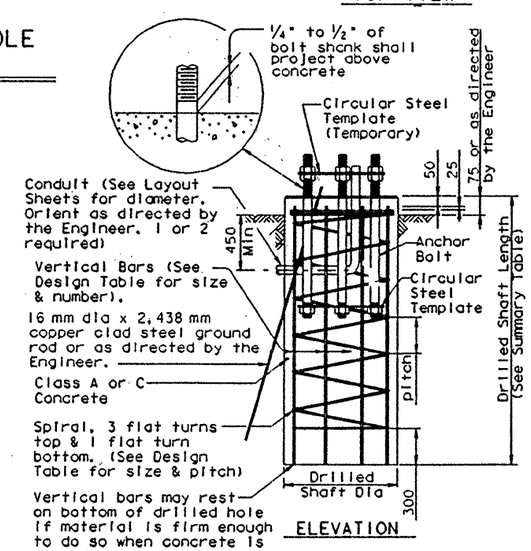

FOUNDATION DETAILS

GENERAL NOTES:

Design conforms to 1994 AASHTO Standard Spec. for Structural Supports for Highway Signs, Luminaires and Traffic Signals and Interim revisions thereto.

Reinforcing steel shall conform to Item 440.

Concrete shall be Class A or C.

Threads for anchor bolts and nuts shall be rolled or cut threads of unified national coarse thread series except for A193M B7 bolts which shall have 8 pitch thread series. Bolts and nuts shall have Class 2A and 2B fit tolerances. Galvanized nuts shall be tapped after galvanizing.

Anchor bolts that are 1" in diameter or less shall conform to ASTM A36M. Anchor bolts larger than 1" in diameter shall conform to Special Spec. A36M Mod380 or ASTM A193M B7 or A687. Galvanize or coat with zinc-rich paint a minimum of the upper 14 inches of all anchor bolts unless otherwise noted. Nuts for anchor bolts shall conform to ASTM A563M Gr A or better heavy hex. Exposed nuts shall be galvanized or coated with zinc-rich paint. Washers shall be galvanized. Templates and embeded nuts need not be galvanized.

All dimensions are in millimeters unless otherwise noted.

STANDARD PLANS
TEXAS DEPARTMENT OF TRANSPORTATION
Traffic Operations Division

TRAFFIC SIGNAL POLE FOUNDATION

TS-FD-96 (M)

DATE	GRID	DIR	FILE	CK	DW	CK	SHEET
August 1995		MS		JSY	MAO/MAF	JSY	
REVISIONS							
3-96							330

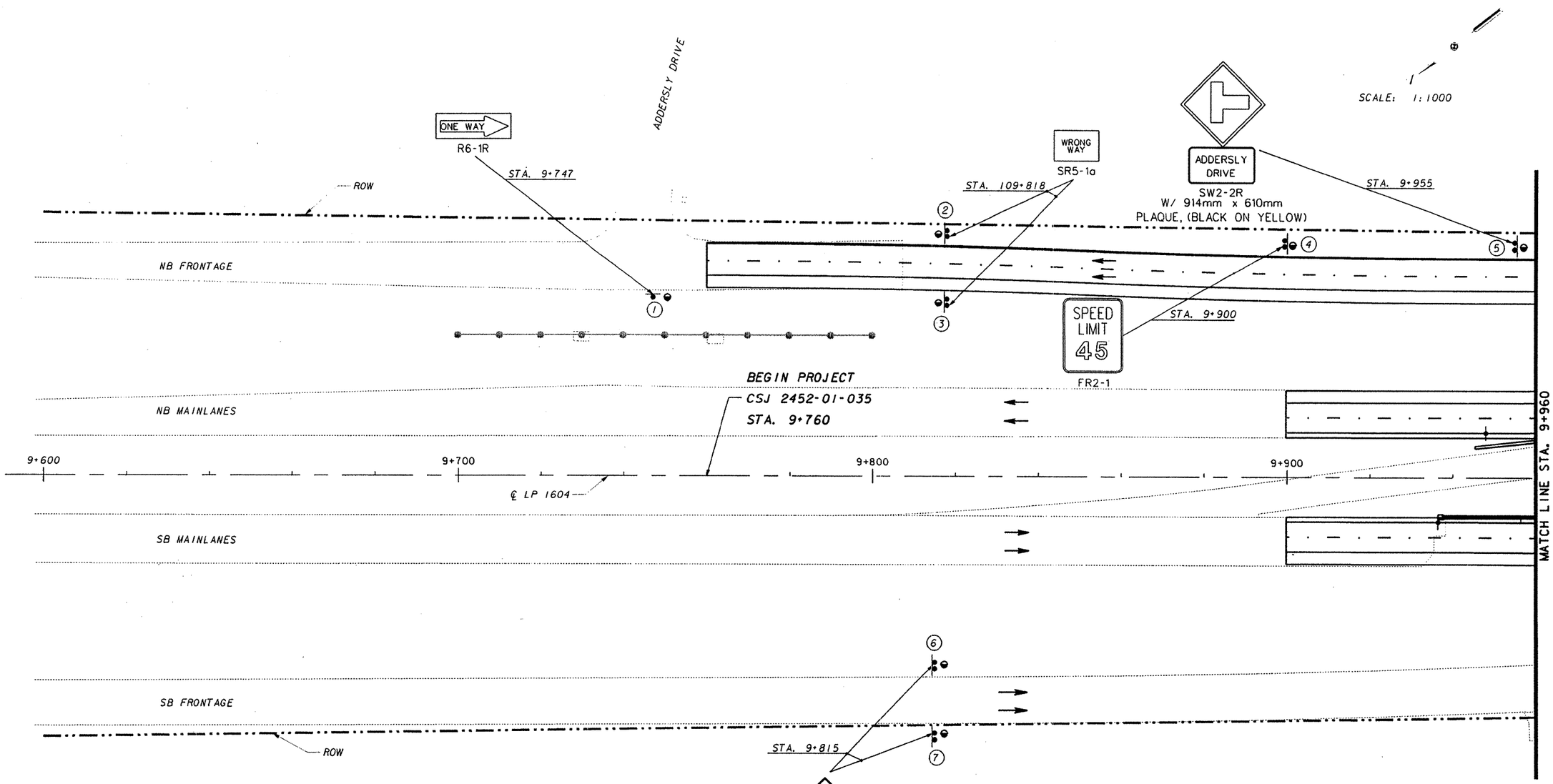

NOTES

- ALL EXISTING SIGNS NOT SHOWN.
- FOR EXISTING SIGN INFORMATION SEE SHEETS 46 & 47 .
- PAVEMENT MARKINGS SHOWN FOR REFERENCE ONLY. SEE PAVEMENT MARKING LAYOUTS FOR DETAILS & QUANTITIES

RIP-RAP APRONS QUANTITIES			
TYPE OF MOUNT	EA.	MULTIPLIED BY M3	TOTAL M3
SINGLE POST	7	1.0	7.0
MULTI-POST			
OVHD. SIGN BRIDGE			
CLASS "B" CONC. SHEET TOTAL			7.0

SEE SHEET 361 FOR RIP-RAP APRON DETAILS
SEE SHEET 58 FOR RIP-RAP SUMMARIZATION.

NO.	DATE	REVISION	APPROV.

Texas Department of Transportation
LOOP 1604

SIGNING LAYOUT
BEGINNING OF PROJECT TO STA. 9+960
1 OF 15

STATE OF TEXAS
BRENT L. CHRISTIAN
73921
REGISTERED PROFESSIONAL ENGINEER
5/5/97

Kimley-Horn and Associates, Inc.

Designed	REK	DIST	FED REG	FEDERAL AID PROJECT •			HIGHWAY
Checked	BLC	15	6				LP1604
Drawn	PKG	COUNTY		CONTROL	SECT	JOB	SHEET
Checked	BLC	BEXAR		2452	01	035	331

LEVEL: DISPLAYED
1 2 3 4 5 6 7 8 9 10 11 12 13 14 15 16
17 18 19 20 21 22 23 24 25 26 27 28 29 30 31 32
33 34 35 36 37 38 39 40 41 42 43 44 45 46 47 48
49 50 51 52 53 54 55 56 57 58 59 60 61 62 63

H:\DRAWINGS\67316O3\RPG\604RPG01.DGN

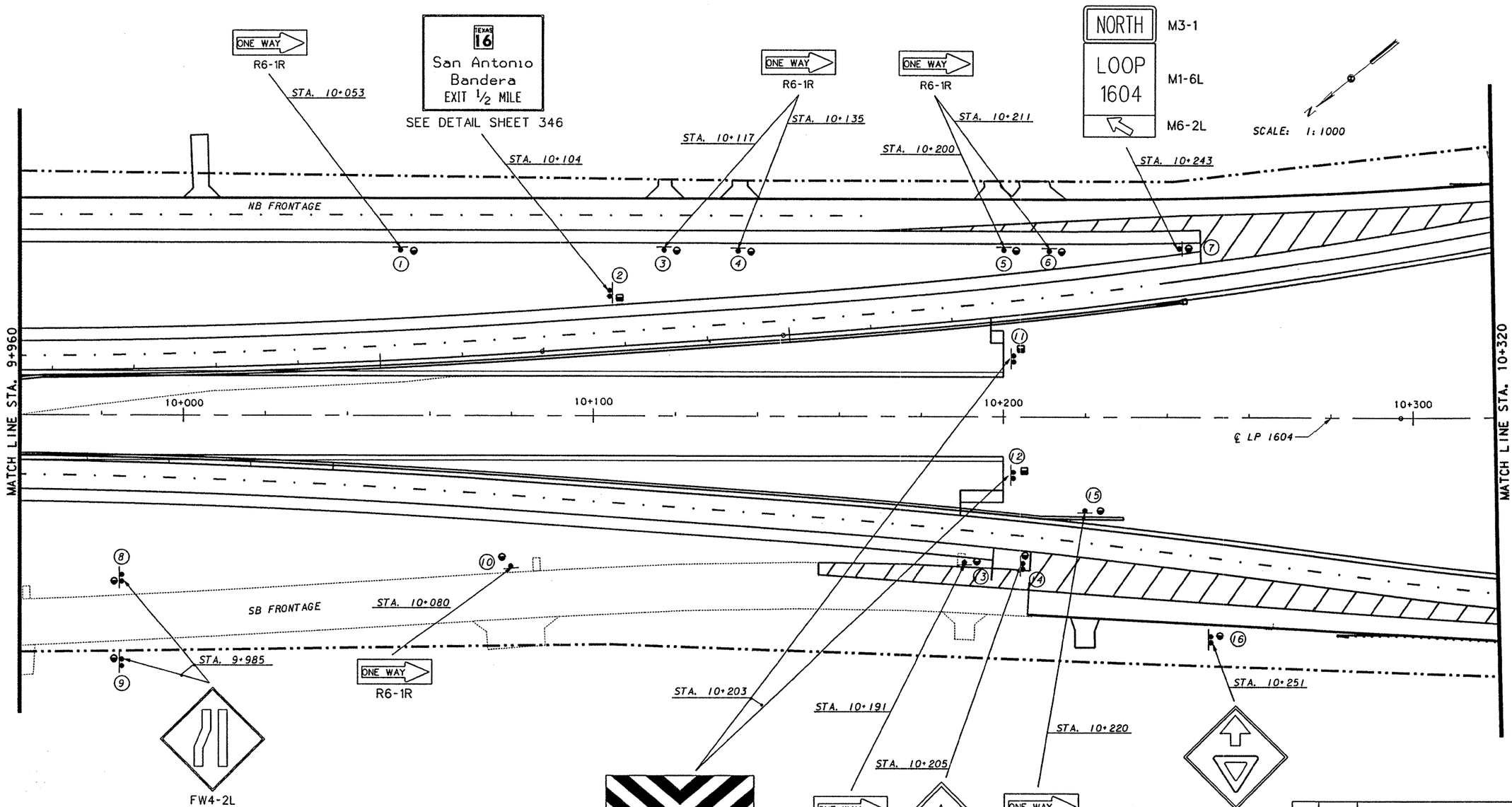

NOTES

- ALL EXISTING SIGNS NOT SHOWN.
- FOR EXISTING SIGN INFORMATION SEE SHEETS 46 & 47 .
- PAVEMENT MARKINGS SHOWN FOR REFERENCE ONLY. SEE PAVEMENT MARKING LAYOUTS FOR DETAILS & QUANTITIES

RIP-RAP APRONS QUANTITIES			
TYPE OF MOUNT	EA.	MULTIPLIED BY M3	TOTAL M3
SINGLE POST	13	1.0	13.0
MULTI-POST	3	1.5	4.5
OVHD. SIGN BRIDGE			
CLASS "B" CONC. SHEET TOTAL			17.5

SEE SHEET 361 FOR RIP-RAP APRON DETAILS
SEE SHEET 58 FOR RIP-RAP SUMMARIZATION.

NO.	DATE	REVISION	APPROV.

Texas Department of Transportation
LOOP 1604

SIGNING LAYOUT
STA. 9+960 TO STA. 10+320
2 OF 15

STATE OF TEXAS
BRENT L. CHRISTIAN
73921
REGISTERED PROFESSIONAL ENGINEER

Brent Christian
6/16/97

Kimley-Horn and Associates, Inc.

Designed	REK	DIST	FED REG	FEDERAL AID PROJECT			HIGHWAY
Checked	BLC	15	6				LP1604
Drawn	PKG	COUNTY		CONTROL	SECT	JOB	SHEET
Checked	BLC	BEXAR		2452	01	035	332

LEVELS DISPLAYED
1 2 3 4 5 6 7 8 9 10 11 12 13 14 15 16
17 18 19 20 21 22 23 24 25 26 27 28 29 30 31 32
33 34 35 36 37 38 39 40 41 42 43 44 45 46 47 48
49 50 51 52 53 54 55 56 57 58 59 60 61 62 63

H:\DRAWINGS\67316031\RPG\604RPG02.DGN

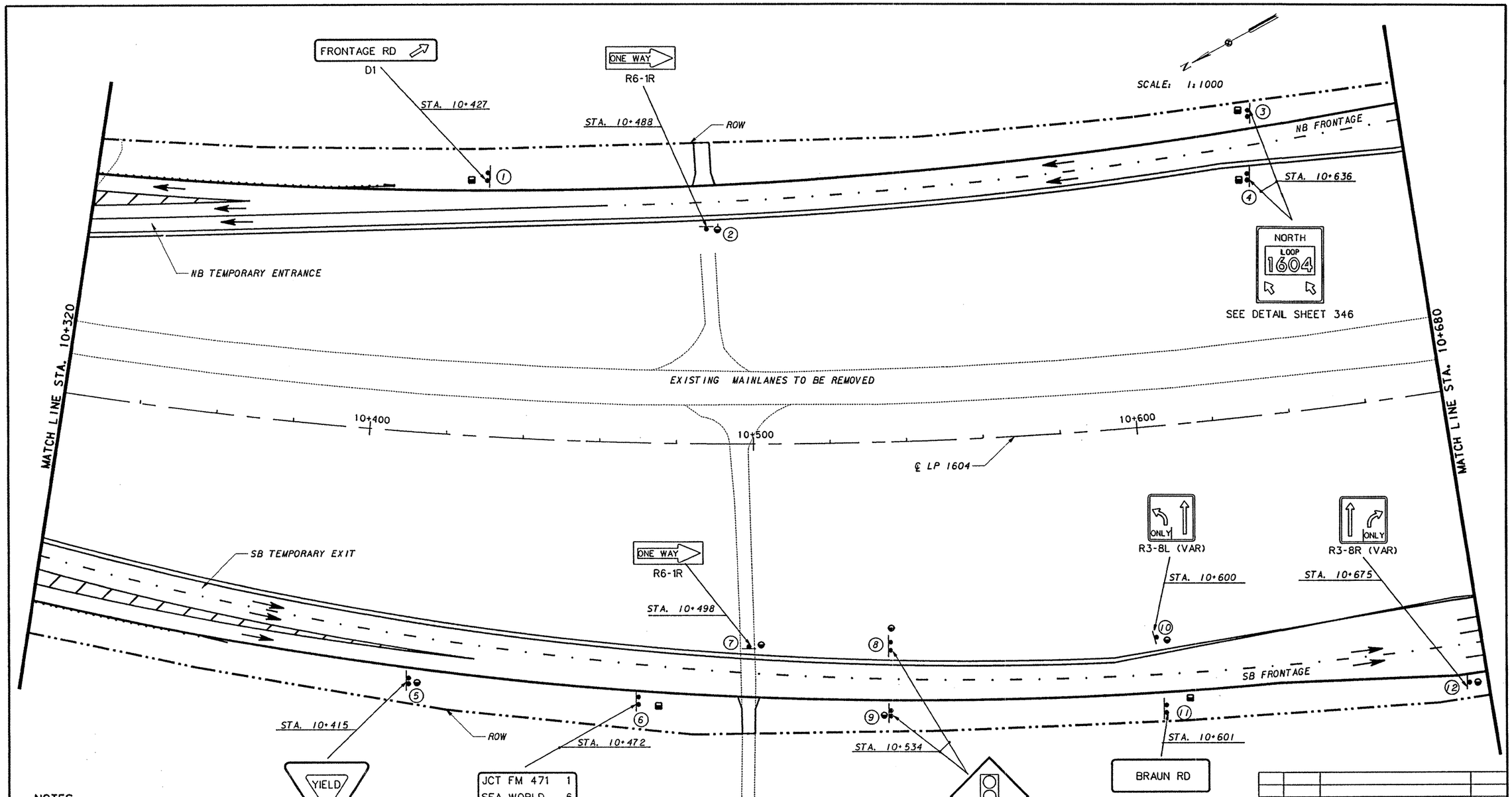

NOTES

- ALL EXISTING SIGNS NOT SHOWN.
- FOR EXISTING SIGN INFORMATION SEE SHEETS 46 & 47 .
- PAVEMENT MARKINGS SHOWN FOR REFERENCE ONLY. SEE PAVEMENT MARKING LAYOUTS FOR DETAILS & QUANTITIES

RIP-RAP APRONS QUANTITIES			
TYPE OF MOUNT	EA.	MULTIPLIED BY M3	TOTAL M3
SINGLE POST	7	1.0	7.0
MULTI-POST	5	1.5	7.5
OVHD. SIGN BRIDGE			
CLASS "B" CONC. SHEET TOTAL			14.5

SEE SHEET 361 FOR RIP-RAP APRON DETAILS
SEE SHEET 58 FOR RIP-RAP SUMMARIZATION.

H:\DRAWINGS\6731603\RPG\604RPG03.DGN

LEVELS DISPLAYED

1	2	3	4	5	6	7	8	9	10	11	12	13	14	15	16
17	18	19	20	21	22	23	24	25	26	27	28	29	30	31	32
33	34	35	36	37	38	39	40	41	42	43	44	45	46	47	48
49	50	51	52	53	54	55	56	57	58	59	60	61	62	63	

NO.	DATE	REVISION	APPROV.

Texas Department of Transportation
LOOP 1604

SIGNING LAYOUT
STA. 10+320 TO STA. 10+680
3 OF 15

STATE OF TEXAS
BRENT L. CHRISTIAN
73921
REGISTERED PROFESSIONAL ENGINEER

Brent Christian
6/16/97

Kimley-Horn and Associates, Inc.

Designed	REK	DIST	FED REG	FEDERAL AID PROJECT					HIGHWAY
Checked	BLC	15	6						LP1604
Drawn	PKG	COUNTY			CONTROL	SECT	JOB		SHEET
Checked	BLC	BEXAR			2452	01	035		333

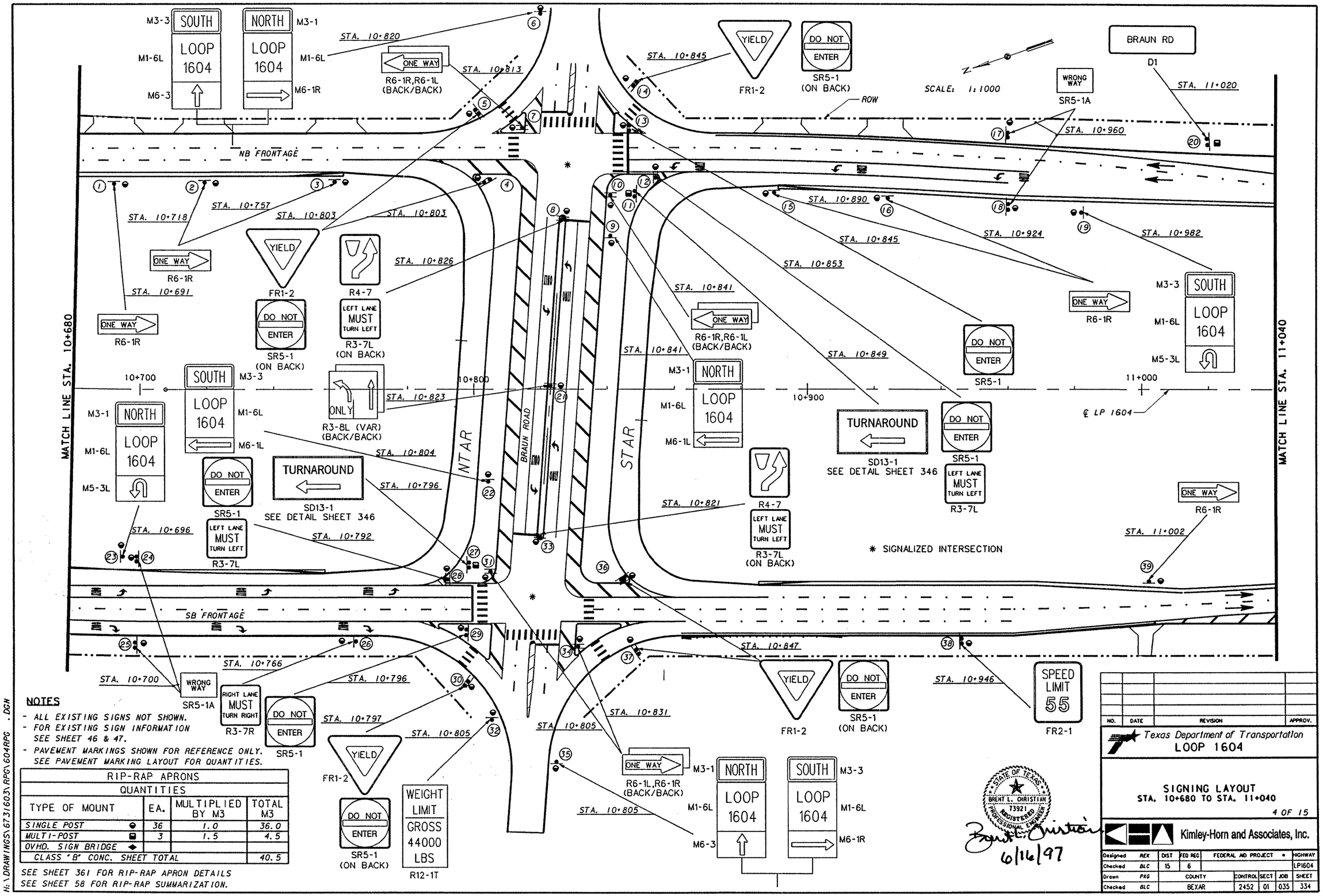

NOTES

- ALL EXISTING SIGNS NOT SHOWN.
- FOR EXISTING SIGN INFORMATION SEE SHEET 46 & 47.
- PAVEMENT MARKINGS SHOWN FOR REFERENCE ONLY. SEE PAVEMENT MARKING LAYOUT FOR QUANTITIES.

RIP-RAP APRONS QUANTITIES			
TYPE OF MOUNT	EA.	MULTIPLIED BY M3	TOTAL M3
SINGLE POST	36	1.0	36.0
MULTI-POST	3	1.5	4.5
OVHD. SIGN BRIDGE			
CLASS "B" CONC. SHEET TOTAL			40.5

SEE SHEET 361 FOR RIP-RAP APRON DETAILS
SEE SHEET 58 FOR RIP-RAP SUMMARIZATION.

LEVELS DISPLAYED																	
1	2	3	4	5	6	7	8	9	10	11	12	13	14	15	16		
17	18	19	20	21	22	23	24	25	26	27	28	29	30	31	32		
33	34	35	36	37	38	39	40	41	42	43	44	45	46	47	48		
49	50	51	52	53	54	55			58	59	60	61	62				

H:\DRAWINGS\6731603\RPG\604RPG .DGN

NO.	DATE	REVISION	APPROV.

Texas Department of Transportation
LOOP 1604

SIGNING LAYOUT
STA. 10+680 TO STA. 11+040

4 OF 15

STATE OF TEXAS
BRENT L. CHRISTIAN
73921
REGISTERED PROFESSIONAL ENGINEER

Brent L. Christian
6/16/97

Kimley-Horn and Associates, Inc.

Designed	REK	DIST	FED REG	FEDERAL AID PROJECT					HIGHWAY
Checked	BLC	15	6						LP1604
Drawn	PKG	COUNTY			CONTROL	SECT	JOB		SHEET
Checked	BLC	BEXAR			2452	01	035		334

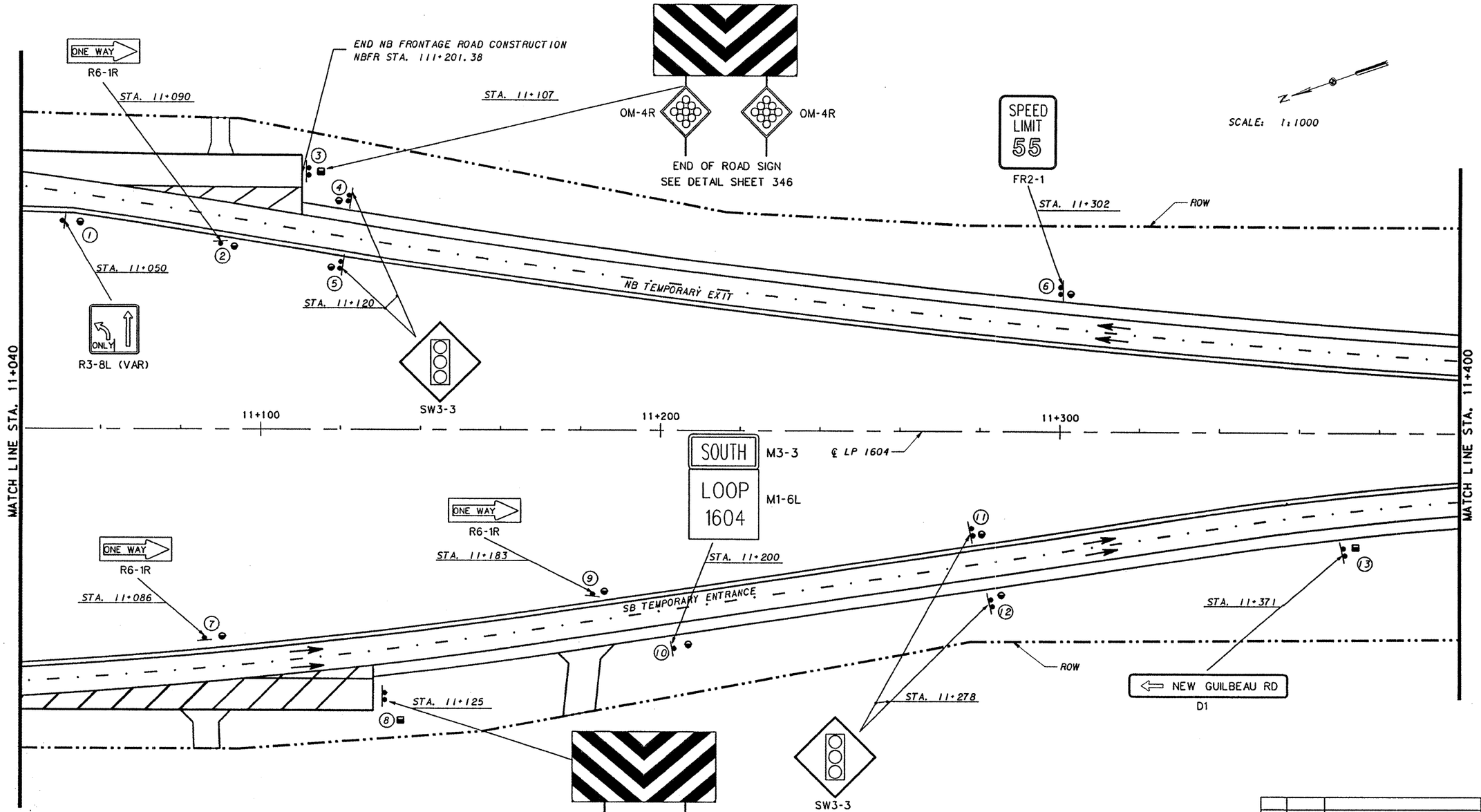

NOTES

- ALL EXISTING SIGNS NOT SHOWN.
- FOR EXISTING SIGN INFORMATION SEE SHEETS 46 & 47 .
- PAVEMENT MARKINGS SHOWN FOR REFERENCE ONLY. SEE PAVEMENT MARKING LAYOUTS FOR DETAILS & QUANTITIES

RIP-RAP APRONS QUANTITIES			
TYPE OF MOUNT	EA.	MULTIPLIED BY M3	TOTAL M3
SINGLE POST	10	1.0	10.0
MULTI-POST	3	1.5	4.5
OVHD. SIGN BRIDGE			
CLASS "B" CONC. SHEET TOTAL			14.5

LEVELS DISPLAYED																	
1	2	3	4	5	6	7	8	9	10	11	12	13	14	15	16		
17	18	19	20	21	22	23	24	25	26	27	28	29	30	31	32		
33	34	35	36	37	38	39	40	41	42	43	44	45	46	47	48		
49	50	51	52	53	54	55	56	57	58	59	60	61	62	63			

H:\DRAWINGS\67316031RPG\604RPG05.DGN

STATE OF TEXAS
BRENT L. CHRISTIAN
73921
REGISTERED
PROFESSIONAL ENGINEER

6/16/97

NO.	DATE	REVISION	APPROV.

Texas Department of Transportation
LOOP 1604

SIGNING LAYOUT
STA. 11+040 TO STA. 11+400
5 OF 15

Kimley-Horn and Associates, Inc.

Designed	REX	DIST	FED REG	FEDERAL AID PROJECT				HIGHWAY
Checked	BLC	15	6					LP1604
Drawn	PKG	COUNTY		CONTROL	SECT	JOB		SHEET
Checked	BLC	BEXAR		2452	01	035		335

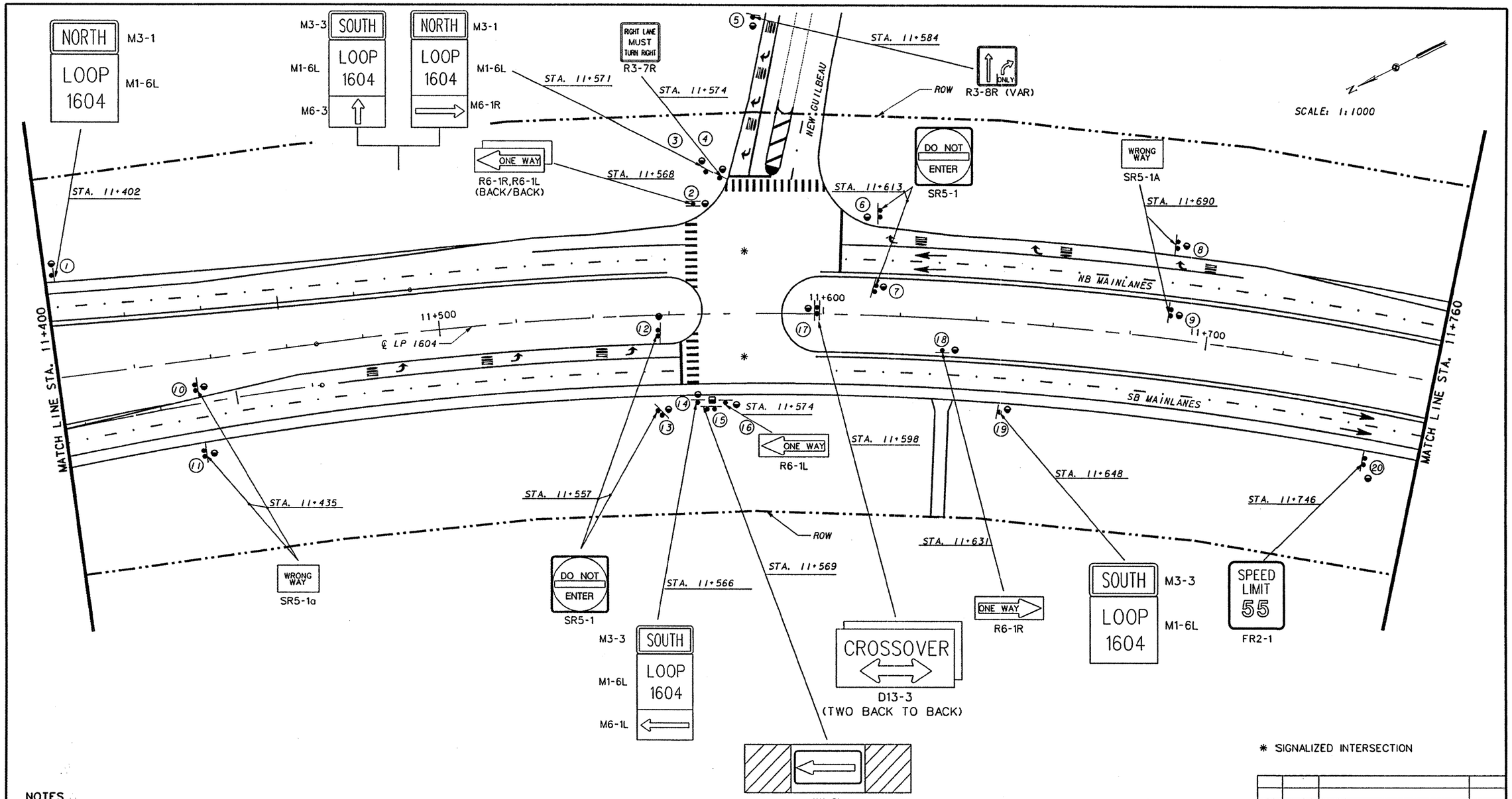

* SIGNALIZED INTERSECTION

NOTES

- ALL EXISTING SIGNS NOT SHOWN.
- FOR EXISTING SIGN INFORMATION SEE SHEETS 46 & 47 .
- PAVEMENT MARKINGS SHOWN FOR REFERENCE ONLY. SEE PAVEMENT MARKING LAYOUTS FOR DETAILS & QUANTITIES

RIP-RAP APRONS QUANTITIES			
TYPE OF MOUNT	EA.	MULTIPLIED BY M3	TOTAL M3
SINGLE POST	19	1.0	19.0
MULTI-POST	1	1.5	1.5
OVHD. SIGN BRIDGE			
CLASS "B" CONC. SHEET TOTAL			20.5

SEE SHEET 361 FOR RIP-RAP APRON DETAILS
SEE SHEET 58 FOR RIP-RAP SUMMARIZATION.

H:\DRAWINGS\67316031\RPG\604RPG06.DGN

LEVELS DISPLAYED
1 2 3 4 5 6 7 8 9 10 11 12 13 14 15 16
17 18 19 20 21 22 23 24 25 26 27 28 29 30 31 32
33 34 35 36 37 38 39 40 41 42 43 44 45 46 47 48
49 50 51 52 53 54 55 56 57 58 59 60 61 62

STATE OF TEXAS
BRENT L. CHRISTIAN
73921
REGISTERED PROFESSIONAL ENGINEER

Brent L. Christian
6/16/97

NO.	DATE	REVISION	APPROV.

Texas Department of Transportation
LOOP 1604

SIGNING LAYOUT
STA. 11+400 TO STA. 11+760
6 OF 15

Kimley-Horn and Associates, Inc.

Designed	RE	DIST	FED REG	FEDERAL AID PROJECT •				HIGHWAY
Checked	BLC	15	6					LP1604
Drawn	PKG	COUNTY			CONTROL	SECT	JOB	SHEET
Checked	BLC	BEXAR			2452	01	035	336

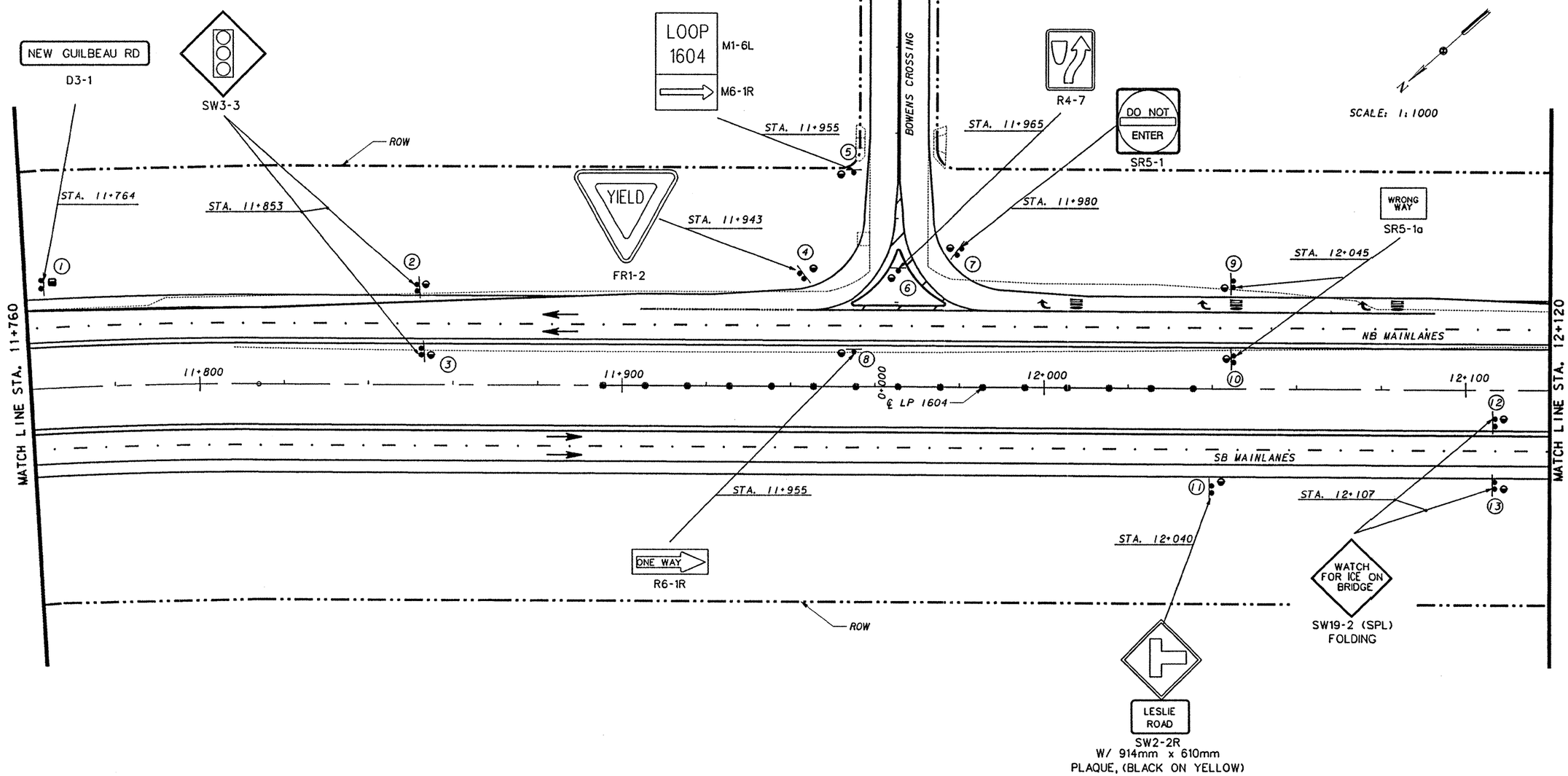

NOTES

- ALL EXISTING SIGNS NOT SHOWN.
- FOR EXISTING SIGN INFORMATION SEE SHEETS 46 & 47 .
- PAVEMENT MARKINGS SHOWN FOR REFERENCE ONLY. SEE PAVEMENT MARKING LAYOUTS FOR DETAILS & QUANTITIES

RIP-RAP APRONS QUANTITIES			
TYPE OF MOUNT	EA.	MULTIPLIED BY M3	TOTAL M3
SINGLE POST	12	1.0	12.0
MULTI-POST	1	1.5	1.5
OVHD. SIGN BRIDGE			
CLASS 'B' CONC. SHEET TOTAL			13.5

SEE SHEET 361 FOR RIP-RAP APRON DETAILS
SEE SHEET 58 FOR RIP-RAP SUMMARIZATION.

STATE OF TEXAS
BRENT L. CHRISTIAN
73921
REGISTERED PROFESSIONAL ENGINEER

Brent L. Christian
6/16/97

NO.	DATE	REVISION	APPROV.

Texas Department of Transportation
LOOP 1604

SIGNING LAYOUT
STA. 11+760 TO STA. 12+120
7 OF 15

Kimley-Horn and Associates, Inc.

Designed	REK	DIST	FED REG	FEDERAL AID PROJECT				HIGHWAY
Checked	BLC	15	6					LP1604
Drawn	PKG	COUNTY			CONTROL	SECT	JOB	SHEET
Checked	BLC	BEXAR			2452	01	035	337

LEVELS DISPLAYED
1 2 3 4 5 6 7 8 9 10 11 12 13 14 15 16
17 18 19 20 21 22 23 24 25 26 27 28 29 30 31 32
33 34 35 36 37 38 39 40 41 42 43 44 45 46 47 48
49 50 51 52 53 54 55 56 57 58 59 60 61 62

H:\DRAWINGS\67316O3\RPG\604RPG07.DGN

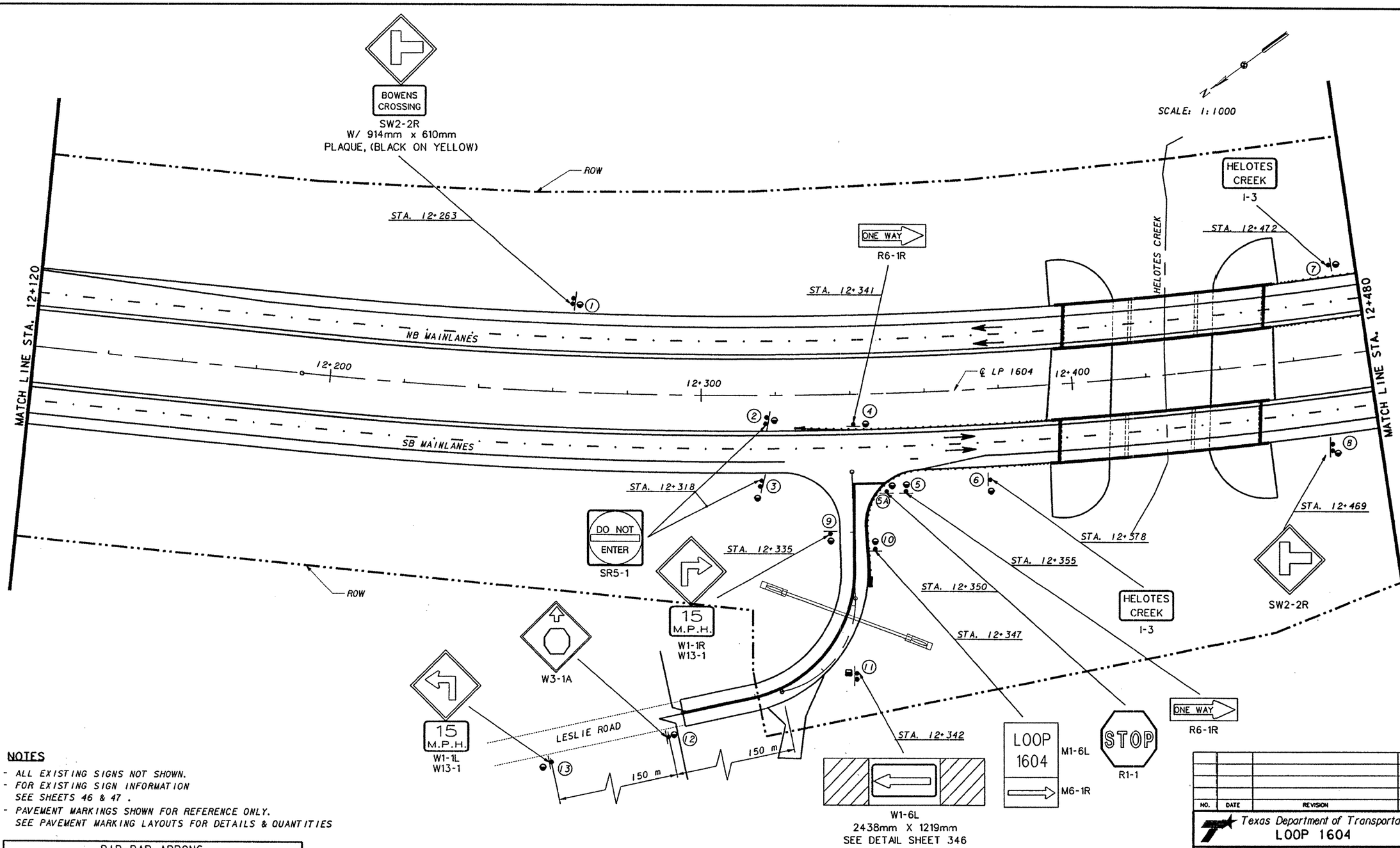

NOTES

- ALL EXISTING SIGNS NOT SHOWN.
- FOR EXISTING SIGN INFORMATION SEE SHEETS 46 & 47 .
- PAVEMENT MARKINGS SHOWN FOR REFERENCE ONLY. SEE PAVEMENT MARKING LAYOUTS FOR DETAILS & QUANTITIES

RIP-RAP APRONS QUANTITIES			
TYPE OF MOUNT	EA.	MULTIPLIED BY M3	TOTAL M3
SINGLE POST	13	1.0	13.0
MULTI-POST	1	1.5	1.5
OVHD. SIGN BRIDGE			
CLASS 'B' CONC. SHEET TOTAL			14.5

SEE SHEET 361 FOR RIP-RAP APRON DETAILS
SEE SHEET 58 FOR RIP-RAP SUMMARIZATION.

NO.	DATE	REVISION	APPROV.

Texas Department of Transportation
LOOP 1604

SIGNING LAYOUT
STA. 12+120 TO STA. 12+480
8 OF 15

Kimley-Horn and Associates, Inc.

STATE OF TEXAS
BRENT L. CHRISTIAN
73921
REGISTERED PROFESSIONAL ENGINEER
Brent L. Christian
6/16/97

Designed	REK	DIST	FED REG	FEDERAL AID PROJECT			HIGHWAY
Checked	BLC	15	6				LP1604
Drawn	PKG	COUNTY		CONTROL	SECT	JOB	SHEET
Checked	BLC	BEXAR		2452	01	035	338

LEVELS DISPLAYED
1 2 3 4 5 6 7 8 9 10 11 12 13 14 15 16
17 18 19 20 21 22 23 24 25 26 27 28 29 30 31 32
33 34 35 36 37 38 39 40 41 42 43 44 45 46 47 48
49 50 51 52 53 54 55 56 57 58 59 60 61 62 63

H:\DRAWINGS\67316031\RPG\604RP6 08.DGN

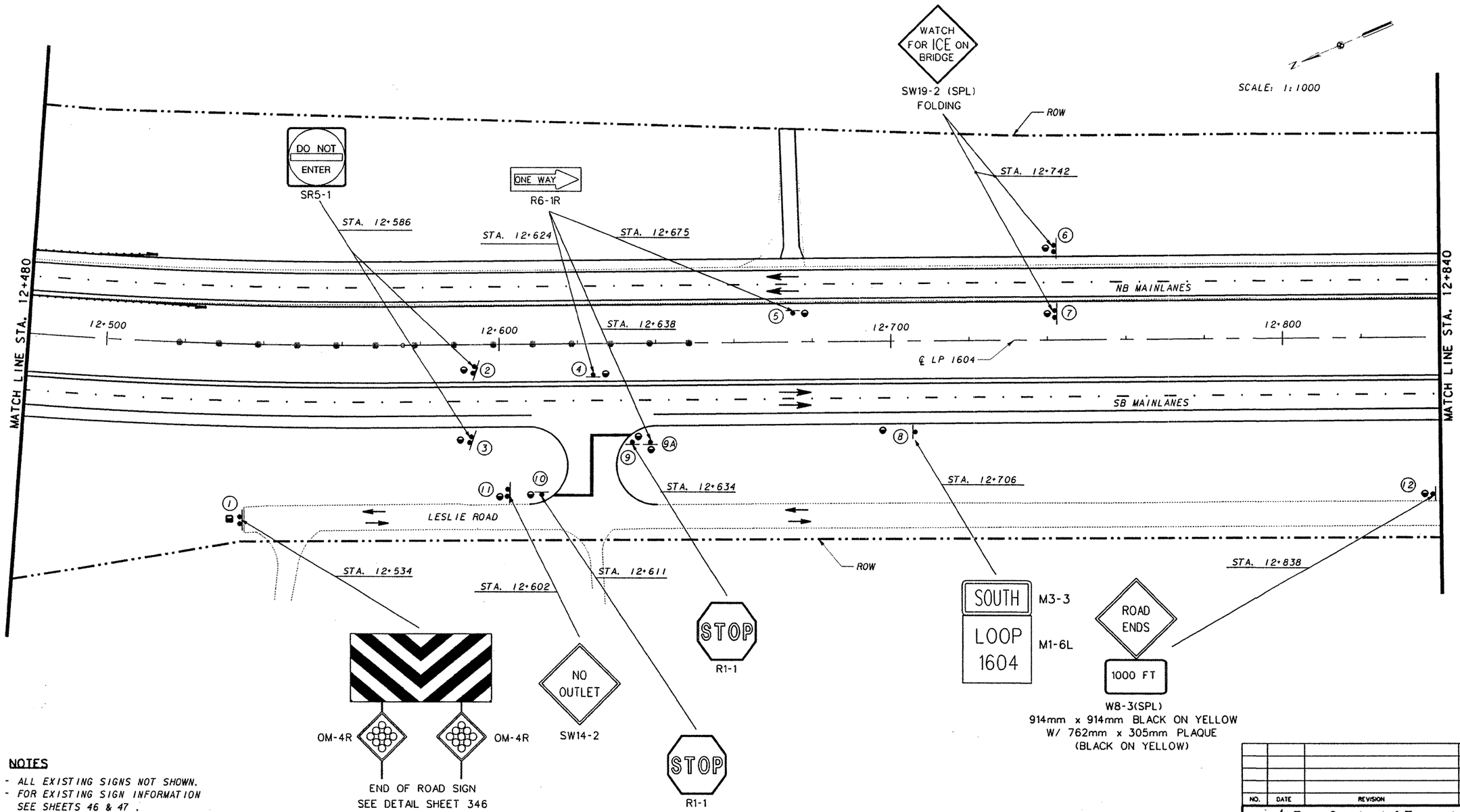

NOTES

- ALL EXISTING SIGNS NOT SHOWN.
- FOR EXISTING SIGN INFORMATION SEE SHEETS 46 & 47 .
- PAVEMENT MARKINGS SHOWN FOR REFERENCE ONLY. SEE PAVEMENT MARKING LAYOUTS FOR DETAILS & QUANTITIES

RIP-RAP APRONS QUANTITIES			
TYPE OF MOUNT	EA.	MULTIPLIED BY M3	TOTAL M3
SINGLE POST	12	1.0	12.0
MULTI-POST	1	1.5	1.5
OVHD. SIGN BRIDGE			
CLASS 'B' CONC. SHEET TOTAL			13.5

SEE SHEET 361 FOR RIP-RAP APRON DETAILS
SEE SHEET 58 FOR RIP-RAP SUMMARIZATION.

NO.	DATE	REVISION	APPROV.

Texas Department of Transportation
LOOP 1604

SIGNING LAYOUT
STA. 12+480 TO STA. 12+840
9 OF 15

STATE OF TEXAS
BRENT L. CHRISTIAN
73921
REGISTERED PROFESSIONAL ENGINEER
5/5/97

Kimley-Horn and Associates, Inc.

Designed	RZK	DIST	FED REG	FEDERAL AID PROJECT •	HIGHWAY
Checked	BLC	15	6		LP1604
Drawn	PKG	COUNTY		CONTROL SECT JOB	SHEET
Checked	BLC	BEXAR		2452 01 035	339

LEVELS DISPLAYED
1 2 3 4 5 6 7 8 9 10 11 12 13 14 15 16
17 18 19 20 21 22 23 24 25 26 27 28 29 30 31 32
33 34 35 36 37 38 39 40 41 42 43 44 45 46 47 48
49 50 51 52 53 54 55 56 57 58 59 60 61 62 63

H:\DRAWINGS\67316O3\RPG\604RPG09.DGN

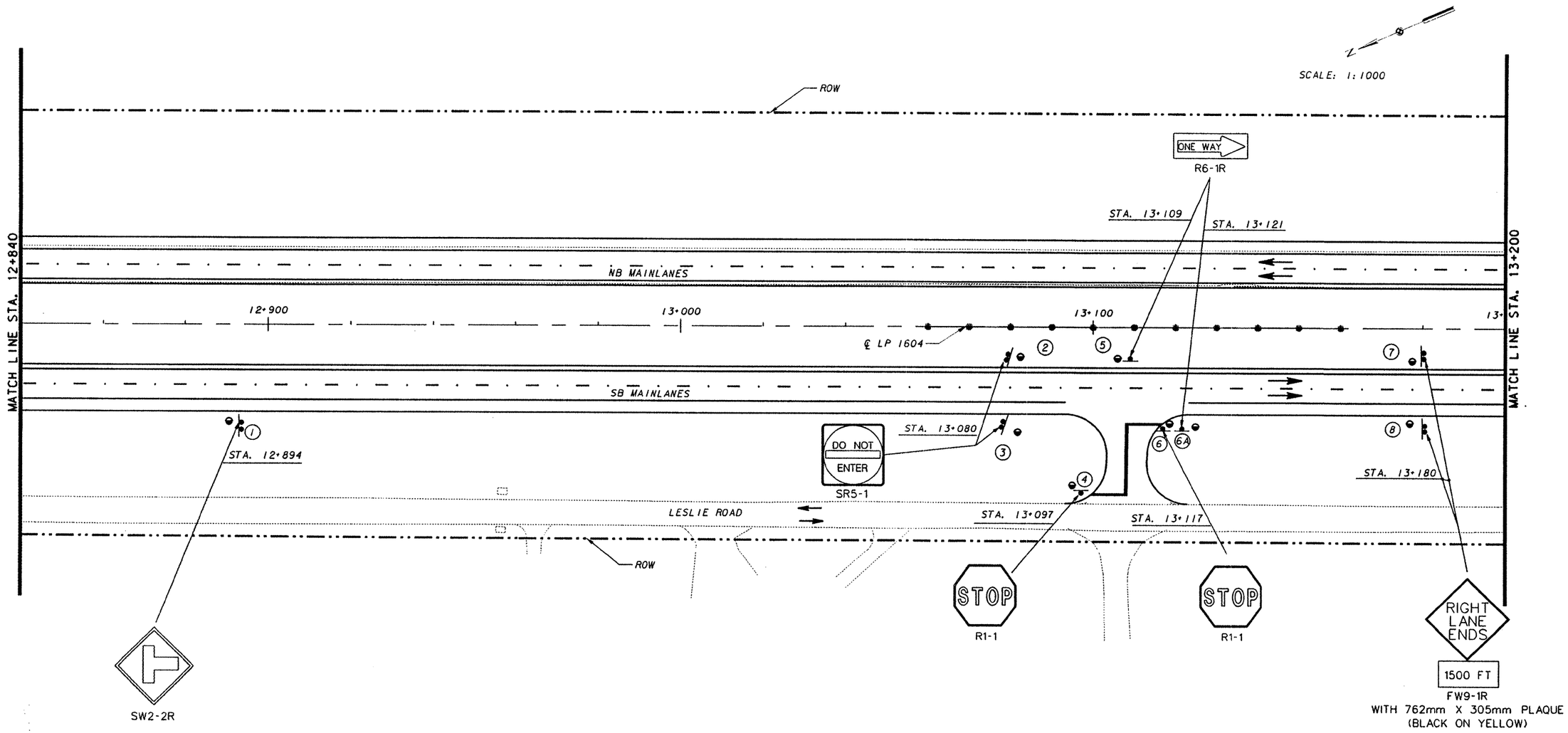

NOTES

- ALL EXISTING SIGNS NOT SHOWN.
- FOR EXISTING SIGN INFORMATION SEE SHEETS 46 & 47 .
- PAVEMENT MARKINGS SHOWN FOR REFERENCE ONLY. SEE PAVEMENT MARKING LAYOUTS FOR DETAILS & QUANTITIES

RIP-RAP APRONS QUANTITIES			
TYPE OF MOUNT	EA.	MULTIPLIED BY M3	TOTAL M3
SINGLE POST	9	1.0	9.0
MULTI-POST			
OVHD. SIGN BRIDGE			
CLASS "B" CONC. SHEET TOTAL			9.0

SEE SHEET 361 FOR RIP-RAP APRON DETAILS
SEE SHEET 58 FOR RIP-RAP SUMMARIZATION.

LEVELS DISPLAYED																
1	2	3	4	5	6	7	8	9	10	11	12	13	14	15	16	
17	18	19	20	21	22	23	24	25	26	27	28	29	30	31	32	
33	34	35	36	37	38	39	40	41	42	43	44	45	46	47	48	
49	50	51	52	53	54	55		57	58	59	60	61	62	63		

H:\DRAWINGS\673160 3\RPG\604RPG10.DGN

NO.	DATE	REVISION	APPROV.

Texas Department of Transportation
LOOP 1604

SIGNING LAYOUT
STA. 12+840 TO STA. 13+200
10 OF 15

STATE OF TEXAS
BRENT L. CHRISTIAN
73921
REGISTERED
PROFESSIONAL ENGINEER

Brent L. Christian
5/5/97

Kimley-Horn and Associates, Inc.

Designed	REX	DIST	FED REG	FEDERAL AID PROJECT			HIGHWAY
Checked	BLC	15	6				LP1604
Drawn	PKG	COUNTY		CONTROL	SECT	JOB	SHEET
Checked	BLC	BEXAR		2452	01	035	340

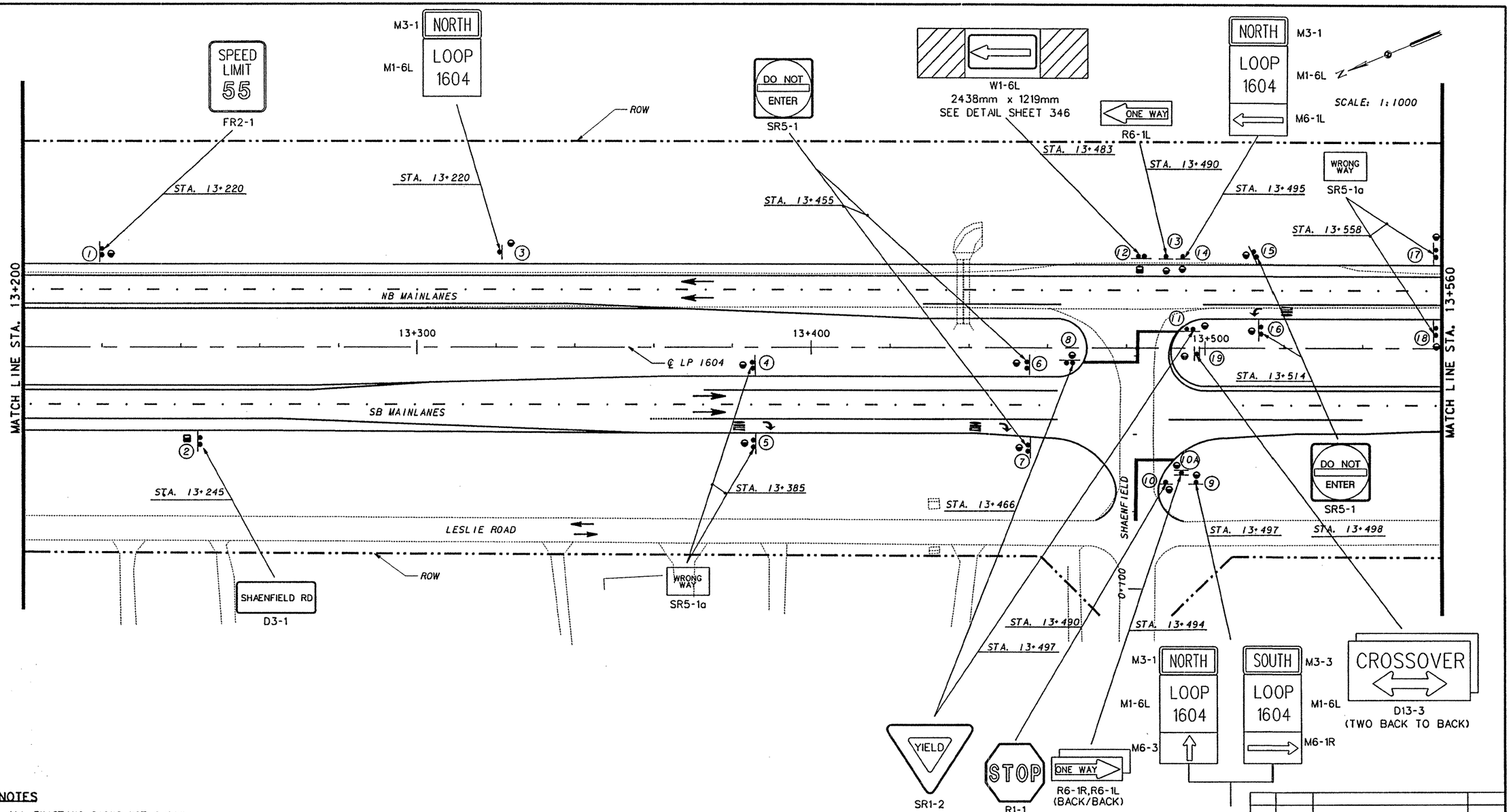

NOTES

- ALL EXISTING SIGNS NOT SHOWN.
- FOR EXISTING SIGN INFORMATION SEE SHEETS 46 & 47 .
- PAVEMENT MARKINGS SHOWN FOR REFERENCE ONLY. SEE PAVEMENT MARKING LAYOUTS FOR DETAILS & QUANTITIES

RIP-RAP APRONS QUANTITIES			
TYPE OF MOUNT	EA.	MULTIPLIED BY M3	TOTAL M3
SINGLE POST	17	1.0	17.0
MULTI-POST	2	1.5	3.0
OVHD. SIGN BRIDGE			
CLASS 'B' CONC. SHEET TOTAL			20.0

SEE SHEET 361 FOR RIP-RAP APRON DETAILS
SEE SHEET 58 FOR RIP-RAP SUMMARIZATION.

NO.	DATE	REVISION	APPROV.

Texas Department of Transportation
LOOP 1604

SIGNING LAYOUT
STA. 13+200 TO STA. 13+560
11 OF 15

STATE OF TEXAS
BRENT L. CHRISTIAN
73921
REGISTERED PROFESSIONAL ENGINEER
Brent L. Christian
6/16/97

Kimley-Horn and Associates, Inc.

Designed	REK	DIST	FED REG	FEDERAL AID PROJECT			HIGHWAY
Checked	BLC	15	6				LP1604
Drawn	PKG	COUNTY		CONTROL	SECT	JOB	SHEET
Checked	BLC	BEXAR		2452	01	035	341

LEVELS DISPLAYED
1 2 3 4 5 6 7 8 9 10 11 12 13 14 15 16
17 18 19 20 21 22 23 24 25 26 27 28 29 30 31 32
33 34 35 36 37 38 39 40 41 42 43 44 45 46 47 48
49 50 51 52 53 54 55 56 57 58 59 60 61 62 63

H:\DRAWINGS\6731603\RPG\604RPG11.DGN

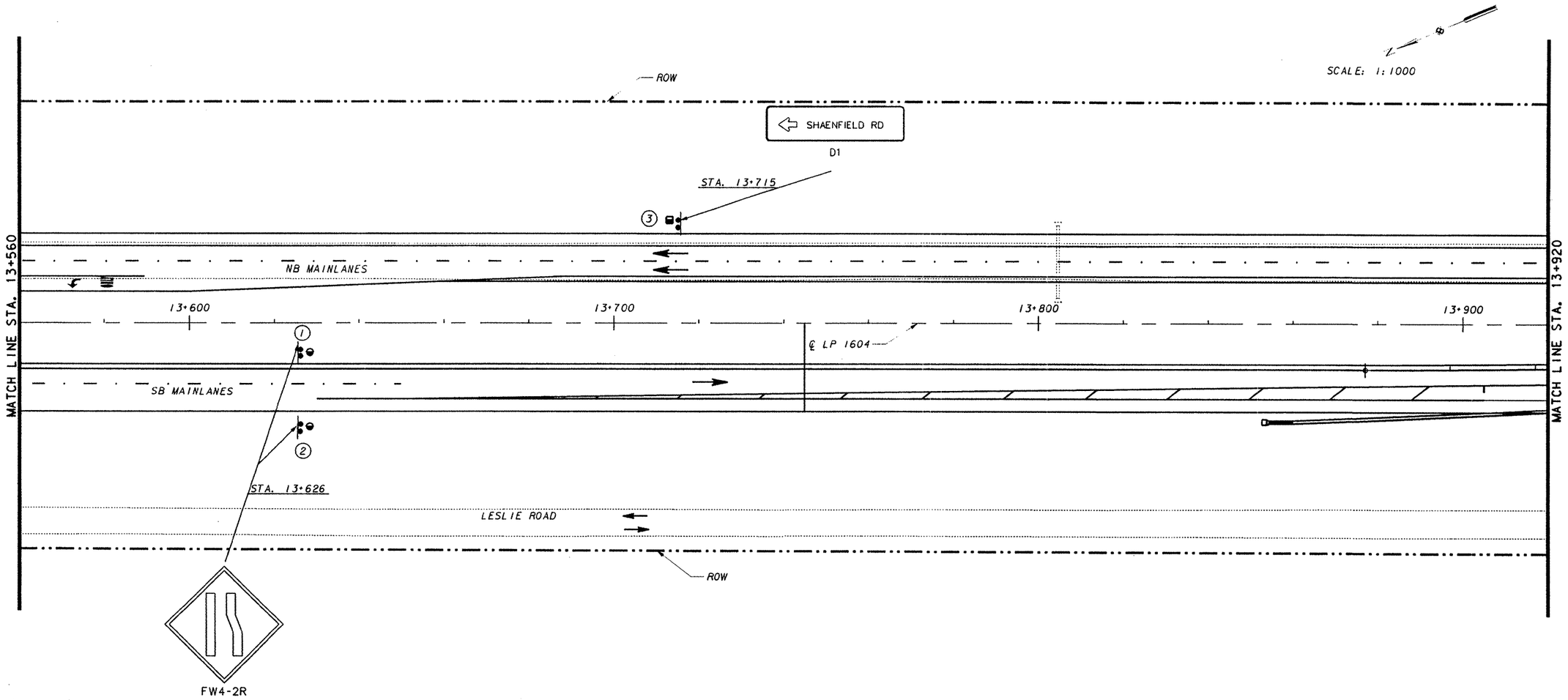

NOTES

- ALL EXISTING SIGNS NOT SHOWN.
- FOR EXISTING SIGN INFORMATION SEE SHEETS 46 & 47 .
- PAVEMENT MARKINGS SHOWN FOR REFERENCE ONLY. SEE PAVEMENT MARKING LAYOUTS FOR DETAILS & QUANTITIES

RIP-RAP APRONS QUANTITIES			
TYPE OF MOUNT	EA.	MULTIPLIED BY M3	TOTAL M3
SINGLE POST	2	1.0	2.0
MULTI-POST	1	1.5	1.5
OVHD. SIGN BRIDGE			
CLASS "B" CONC. SHEET TOTAL			3.5

SEE SHEET 361 FOR RIP-RAP APRON DETAILS
SEE SHEET 58 FOR RIP-RAP SUMMARIZATION.

H:\DRAWINGS\67316031\RPG\604RPG12.DGN

LEVELS DISPLAYED
1 2 3 4 5 6 7 8 9 10 11 12 13 14 15 16
17 18 19 20 21 22 23 24 25 26 27 28 29 30 31 32
33 34 35 36 37 38 39 40 41 42 43 44 45 46 47 48
49 50 51 52 53 54 55 56 57 58 59 60 61 62 63

NO.	DATE	REVISION	APPROV.

Texas Department of Transportation
LOOP 1604

SIGNING LAYOUT
STA. 13+560 TO STA. 13+920
12 OF 15

STATE OF TEXAS
BRENT L. CHRISTIAN
73921
REGISTERED PROFESSIONAL ENGINEER

Brent L. Christian
5/5/97

Kimley-Horn and Associates, Inc.

Designed	REK	DIST	FED REG	FEDERAL AID PROJECT			HIGHWAY
Checked	BLC	15	6				LP1604
Drawn	PKG	COUNTY		CONTROL	SECT	JOB	SHEET
Checked	BLC	BEXAR		2452	01	035	342

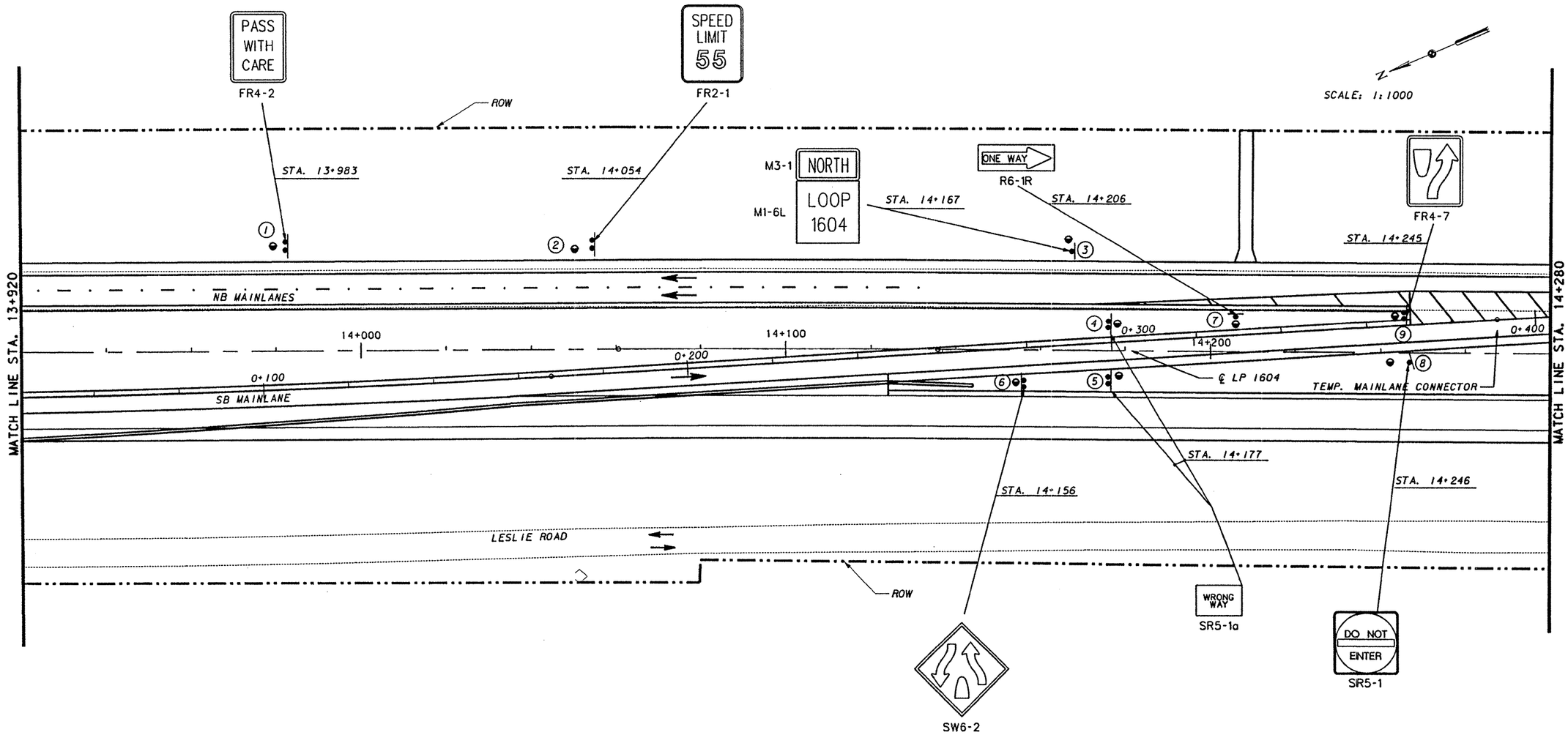

NOTES

- ALL EXISTING SIGNS NOT SHOWN.
- FOR EXISTING SIGN INFORMATION SEE SHEETS 46 & 47 .
- PAVEMENT MARKINGS SHOWN FOR REFERENCE ONLY. SEE PAVEMENT MARKING LAYOUTS FOR DETAILS & QUANTITIES

RIP-RAP APRONS QUANTITIES			
TYPE OF MOUNT	EA.	MULTIPLIED BY M3	TOTAL M3
SINGLE POST	9	1.0	9.0
MULTI-POST			
OVHD. SIGN BRIDGE			
CLASS "B" CONC. SHEET TOTAL			9.0

SEE SHEET 361 FOR RIP-RAP APRON DETAILS
SEE SHEET 58 FOR RIP-RAP SUMMARIZATION.

H:\DRAWINGS\67316O3\RPG\604RPG13.DGN

LEVELS DISPLAYED
1 2 3 4 5 6 7 8 9 10 11 12 13 14 15 16
17 18 19 20 21 22 23 24 25 26 27 28 29 30 31 32
33 34 35 36 37 38 39 40 41 42 43 44 45 46 47 48
49 50 51 52 53 54 55 56 57 58 59 60 61 62 63

NO.	DATE	REVISION	APPROV.

Texas Department of Transportation
LOOP 1604

SIGNING LAYOUT
STA. 13+920 TO STA. 14+280
13 OF 15

STATE OF TEXAS
BRENT L. CHRISTIAN
73921
REGISTERED PROFESSIONAL ENGINEER

Brent L. Christian
6/16/97

Kimley-Horn and Associates, Inc.

Designed	REX	DIST	FED REG	FEDERAL AID PROJECT			HIGHWAY
Checked	BLC	15	6				LP1604
Drawn	PKG	COUNTY		CONTROL	SECT	JOB	SHEET
Checked	BLC	BEXAR		2452	01	035	343

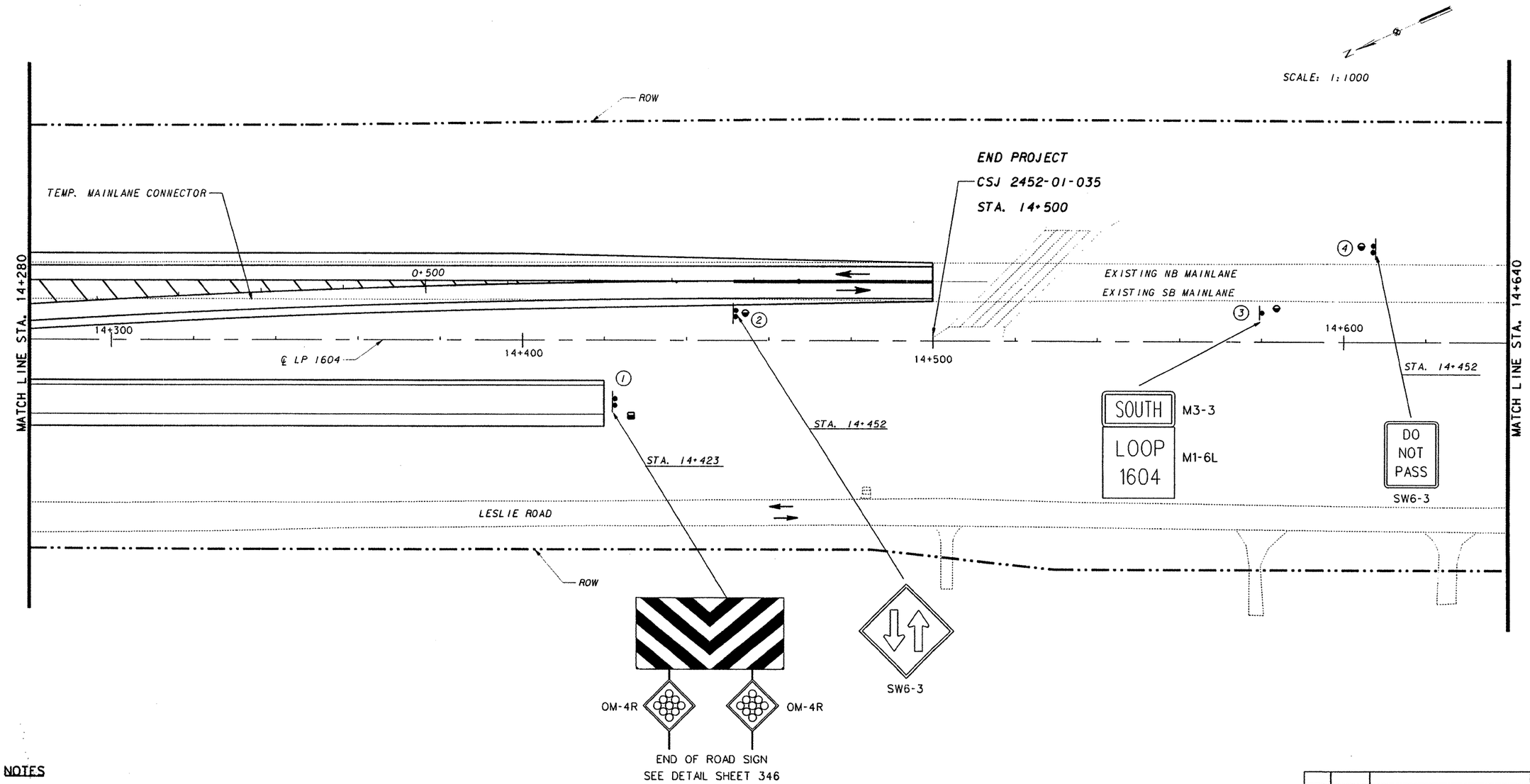

NOTES

- ALL EXISTING SIGNS NOT SHOWN.
- FOR EXISTING SIGN INFORMATION SEE SHEETS 46 & 47 .
- PAVEMENT MARKINGS SHOWN FOR REFERENCE ONLY. SEE PAVEMENT MARKING LAYOUTS FOR DETAILS & QUANTITIES

RIP-RAP APRONS QUANTITIES			
TYPE OF MOUNT	EA.	MULTIPLIED BY M3	TOTAL M3
SINGLE POST	3	1.0	3.0
MULTI-POST	1	1.5	1.5
OVHD. SIGN BRIDGE			
CLASS "B" CONC. SHEET TOTAL			4.5

SEE SHEET 361 FOR RIP-RAP APRON DETAILS
SEE SHEET 58 FOR RIP-RAP SUMMARIZATION.

STATE OF TEXAS
BRENT L. CHRISTIAN
73921
REGISTERED
PROFESSIONAL ENGINEER

Brent L. Christian
5/5/97

NO.	DATE	REVISION	APPROV.

Texas Department of Transportation
LOOP 1604

SIGNING LAYOUT
STA. 14+280 TO STA. 14+640
14 OF 15

Kimley-Horn and Associates, Inc.

Designed	REK	DIST	FED REG	FEDERAL AID PROJECT •				HIGHWAY
Checked	BLC	15	6					LP1604
Drawn	PKG	COUNTY		CONTROL	SECT	JOB		SHEET
Checked	BLC	BEXAR		2452	01	035		344

LEVELS DISPLAYED
1 2 3 4 5 6 7 8 9 10 11 12 13 14 15 16
17 18 19 20 21 22 23 24 25 26 27 28 29 30 31 32
33 34 35 36 37 38 39 40 41 42 43 44 45 46 47 48
49 50 51 52 53 54 55 56 57 58 59 60 61 62 63

H:\DRAWINGS\6731603\RPG\604RPG14.DGN

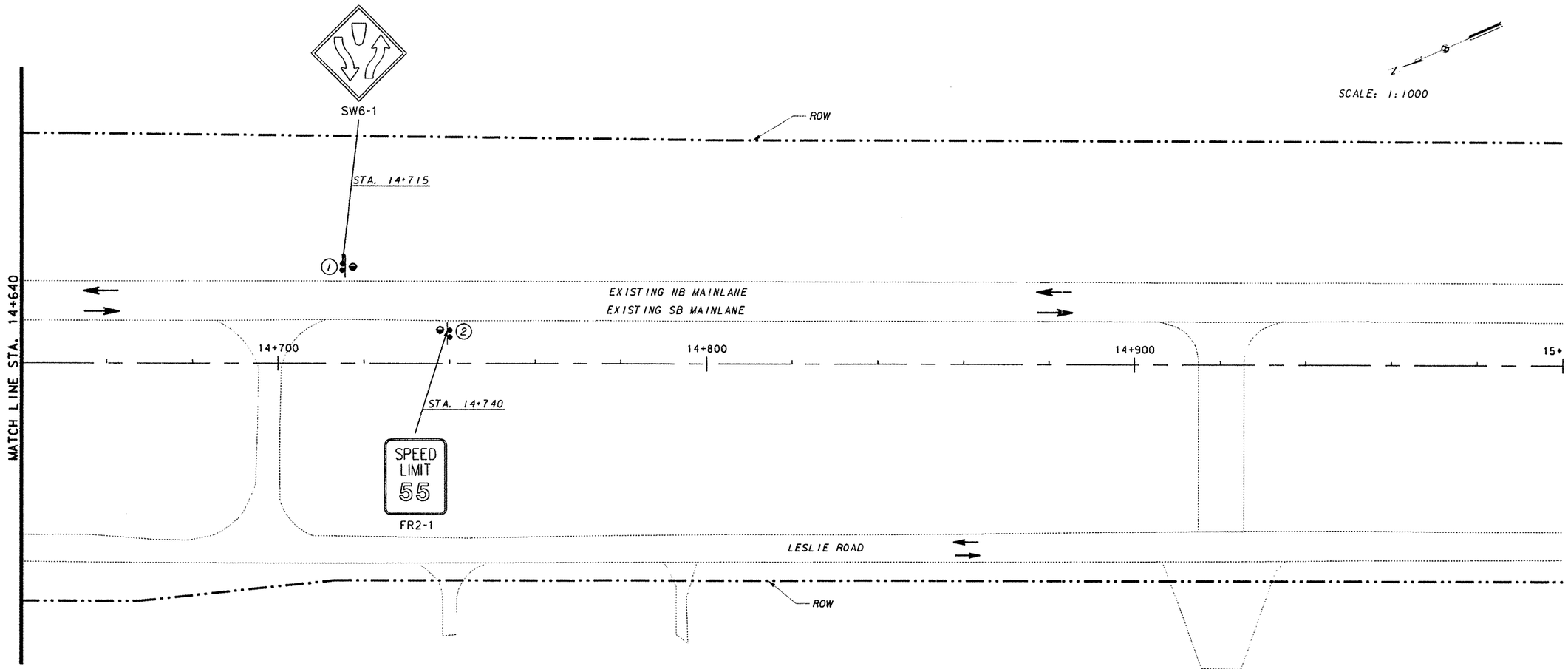

NOTES

- ALL EXISTING SIGNS NOT SHOWN.
- FOR EXISTING SIGN INFORMATION SEE SHEETS 46 & 47 .
- PAVEMENT MARKINGS SHOWN FOR REFERENCE ONLY. SEE PAVEMENT MARKING LAYOUTS FOR DETAILS & QUANTITIES

RIP-RAP APRONS QUANTITIES			
TYPE OF MOUNT	EA.	MULTIPLIED BY M3	TOTAL M3
SINGLE POST	2	1.0	2.0
MULTI-POST			
OVHD. SIGN BRIDGE			
CLASS "B" CONC. SHEET TOTAL			2.0

SEE SHEET 361 FOR RIP-RAP APRON DETAILS
SEE SHEET 58 FOR RIP-RAP SUMMARIZATION.

LEVELS DISPLAYED
1 2 3 4 5 6 7 8 9 10 11 12 13 14 15 16
17 18 19 20 21 22 23 24 25 26 27 28 29 30 31 32
33 34 35 36 37 38 39 40 41 42 43 44 45 46 47 48
49 50 51 52 53 54 55 56 57 58 59 60 61 62 63

H:\DRAWINGS\67316031\RPG\604RPG15.DGN

STATE OF TEXAS
BRENT L. CHRISTIAN
73921
REGISTERED PROFESSIONAL ENGINEER

Brent L. Christian
5/5/97

NO.	DATE	REVISION	APPROV.

Texas Department of Transportation
LOOP 1604

SIGNING LAYOUT
STA. 14+640 TO END SIGNING
15 OF 15

Kimley-Horn and Associates, Inc.

Designed	REK	DIST	FED REG	FEDERAL AID PROJECT				HIGHWAY
Checked	BLC	15	6					LP1604
Drawn	PKG	COUNTY		CONTROL	SECT	JOB		SHEET
Checked	BLC	BEXAR		2452	01	035		345

*: SIGNS SHALL HAVE WHITE REFLECTOR TEXT
ON GREEN REFLECTIVE BACKGROUND
(HI-INTENSITY) WITH WHITE BORDER

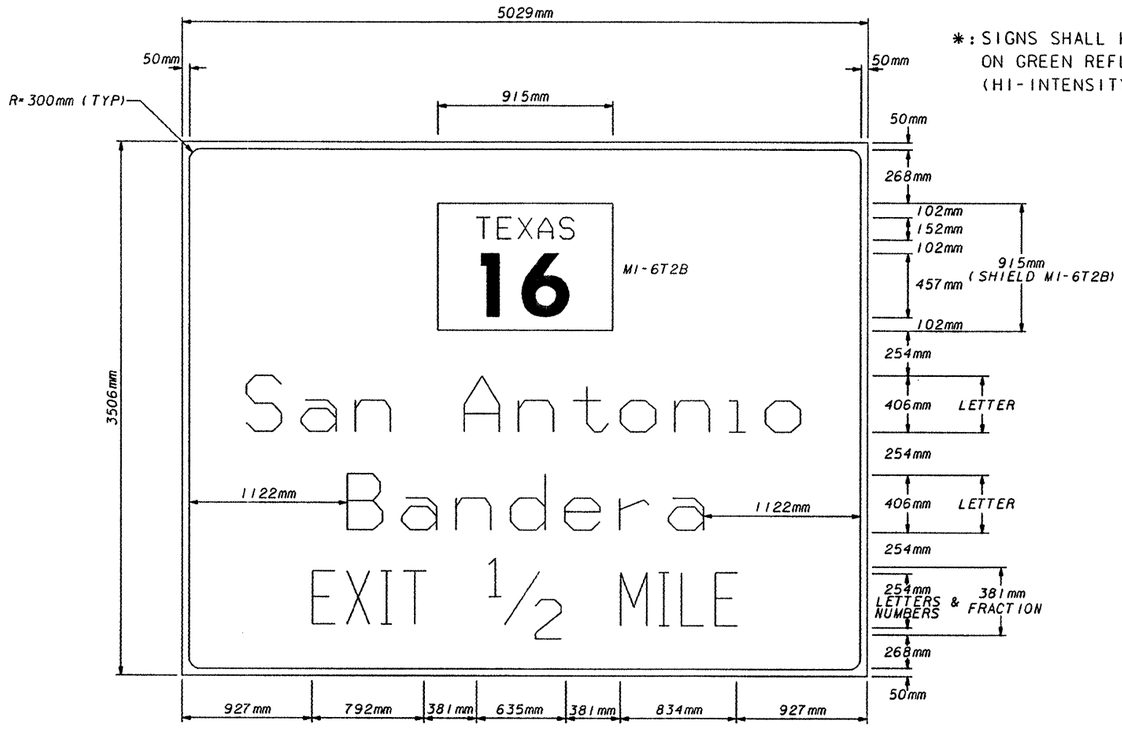

* LARGE SIGN
STA. 10+104
1-REQUIRED

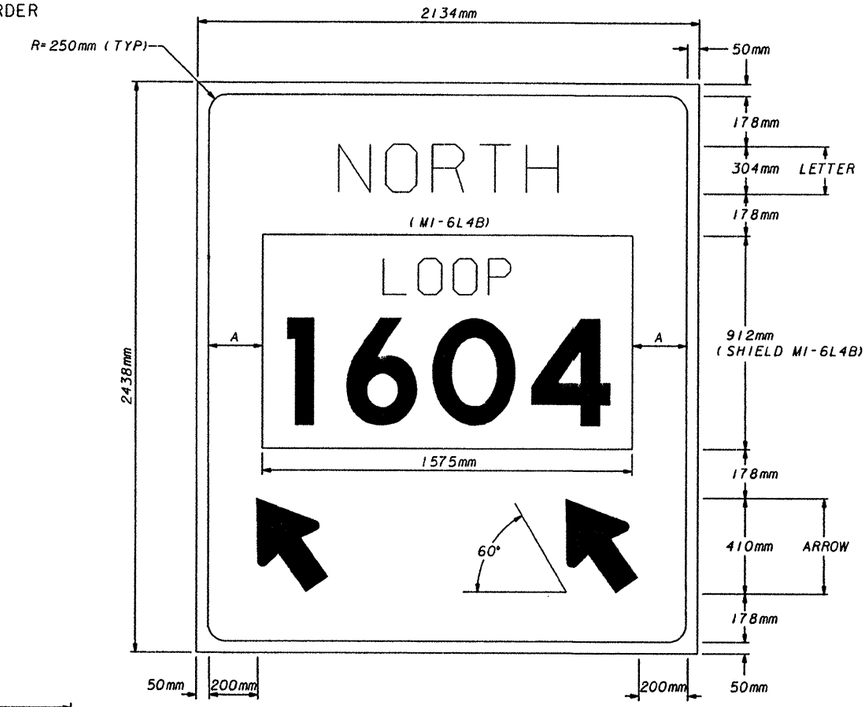

* LARGE SIGN
STA. 10+629
2-REQUIRED

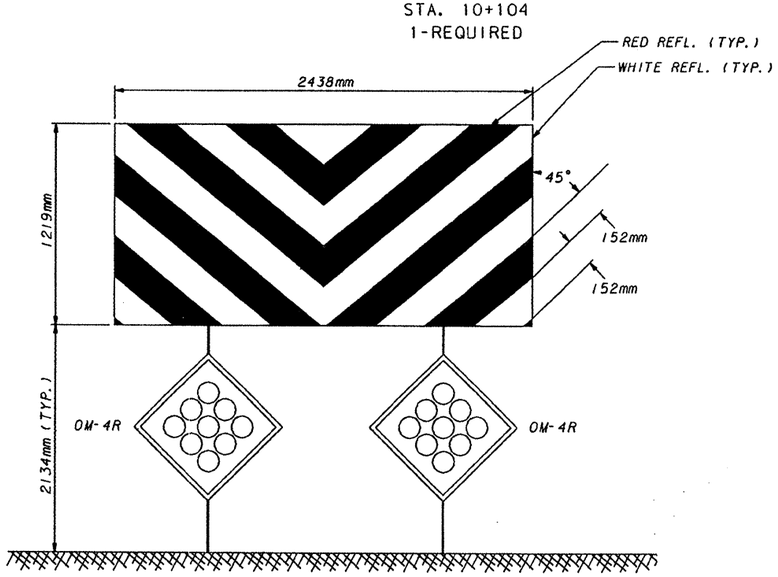

END OF ROAD SIGN
RED ON WHITE REFLECTIVE
BACKGROUND (HI-INTENSITY)

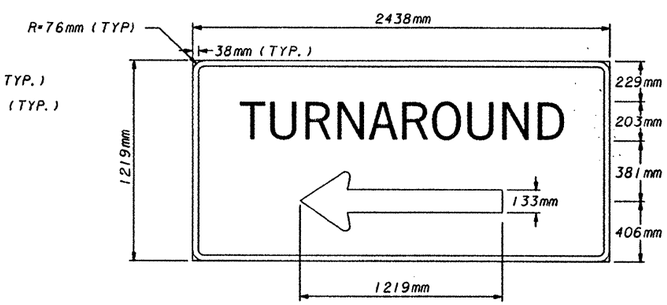

* SD14-1

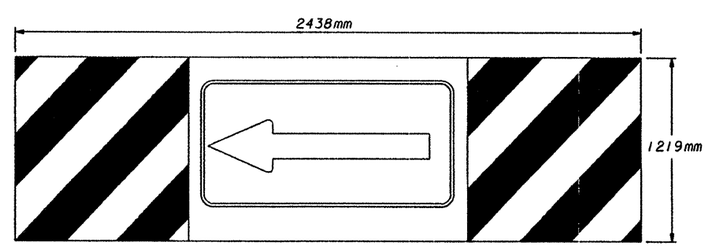

W1-6L

STATE OF TEXAS
BRENT L. CHRISTIAN
73921
REGISTERED
PROFESSIONAL ENGINEER

Brent L. Christian
5/5/97

NO.	DATE	REVISION	APPROV.

Texas Department of Transportation
LOOP 1604

LARGE SIGN
DETAILS

1 OF 1

Kimley-Horn and Associates, Inc.

Designed	REK	DIST	FED REG	FEDERAL AID PROJECT •				HIGHWAY
Checked	BLC	15	6					LP1604
Drawn	PKG	COUNTY		CONTROL	SECT	JOB		SHEET
Checked	BLC	BEXAR		2452	01	035		346

LEVELS DISPLAYED
1 2 3 4 5 6 7 8 9 10 11 12 13 14 15 16
17 18 19 20 21 22 23 24 25 26 27 28 29 30 31 32
33 34 35 36 37 38 39 40 41 42 43 44 45 46 47 48
49 50 51 52 53 54 55 56 57 58 59 60 61 62 63

H:\DRAWINGS\67316O3\RPG\LGSGNDET.DGN

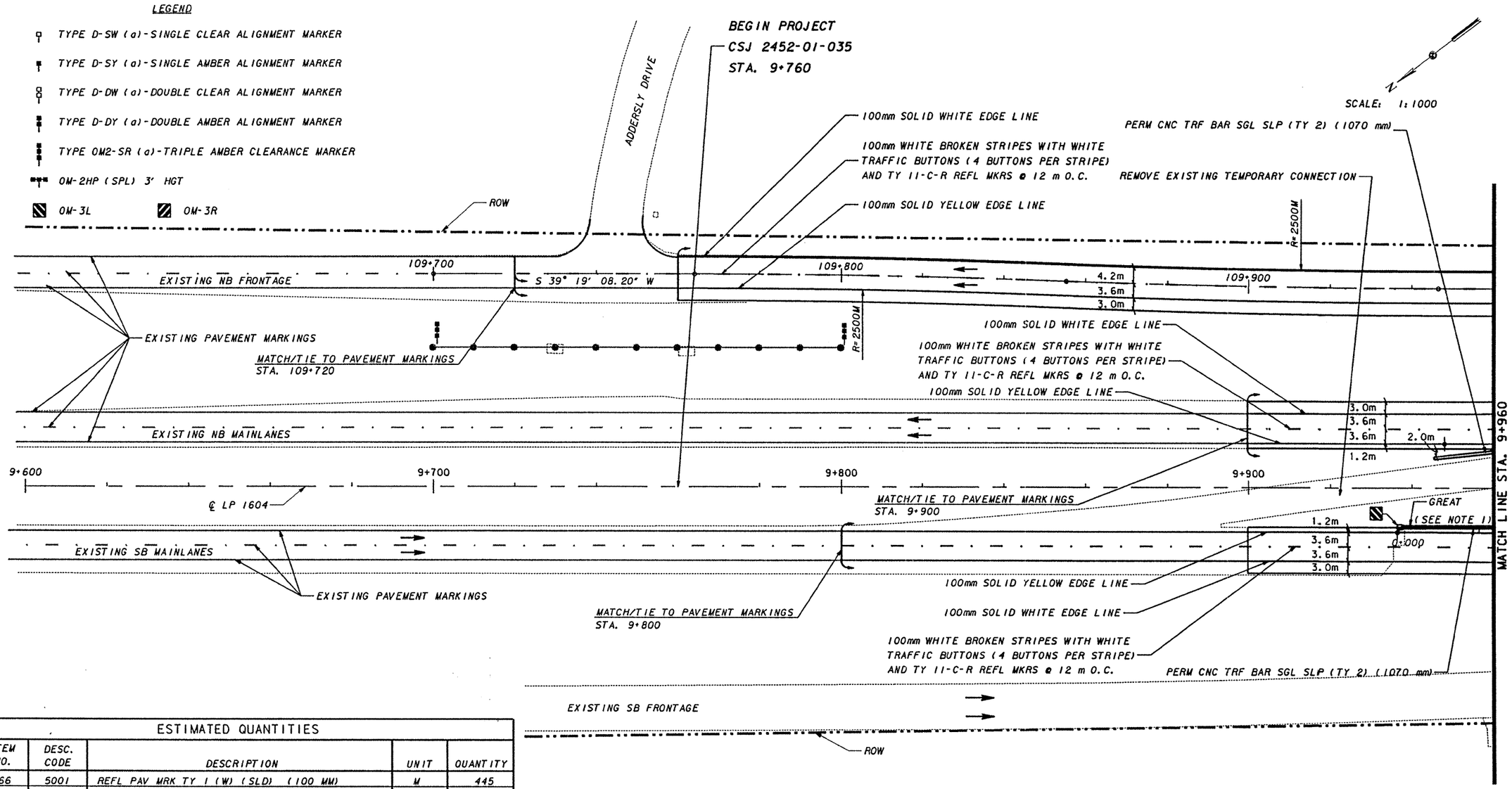

ESTIMATED QUANTITIES

ITEM NO.	DESC. CODE	DESCRIPTION	UNIT	QUANTITY
666	5001	REFL PAV MRK TY I (W) (SLD) (100 MM)	M	445
666	5002	REFL PAV MRK TY I (W) (BRK) (100 MM)	M	120
666	5006	REFL PAV MRK TY I (W) (SLD) (200 MM)	M	
666	5012	REFL PAV MRK TY I (W) (SLD) (600 MM)	M	
666	5013	REFL PAV MRK TY I (W) (ARROW)	EA	
666	5017	REFL PAV MRK TY I (W) (WORD)	EA	
666	5024	REFL PAV MRK TY I (Y) (SLD) (100 MM)	M	460
666	5029	REFL PAV MRK TY I (Y) (SLD) (200 MM)	M	
666	5032	REFL PAV MRK TY I (Y) (SLD) (600 MM)	M	
672	5004	RAIS PAV MRKR CL A (JIGGLE) TY W	EA	
672	5005	RAIS PAV MRKR CL A (JIGGLE) TY Y	EA	
672	5009	RAIS PAV MRKR CL B (REFL) TY II-A-A	EA	
672	5010	RAIS PAV MRKR CL B (REFL) TY II-C-R	EA	38
672	5016	RAIS PAV MRKR CL C (TRAF BTN) TY W	EA	224
672	5017	RAIS PAV MRKR CL C (TRAF BTN) TY Y	EA	
677	5003	ELIM EXT PAV MRK & MRKR (200 MM)	M	310
677	5006	ELIM EXT PAV MRK & MRKR (600MM)	M	228
659	5001	REMOV DELIN & OBJECT MARKER ASSMS	EA	24

DELINEATION QUANTITIES

TYPE	EA	ASM	SPL MNT
D-SW (a)			
D-DW (a)			
D-SY (a)			
D-DY (a)			
OM-2SR (a)		2	
OM-2HP (a)			
OM-3L	1		
OM-3R			

NOTES

1. CTB IS PARALLEL WITH AND OFFSET FROM THE TWO EDGE LINES BY 1.2 m EXCEPT AT THE FLARES ON EACH END. FLARE RATE IS 10:1.
2. ANY PAVEMENT MARKING IN CONFLICT WITH PROPOSED MARKINGS SHALL BE REMOVED BY CONTRACTOR OR AS DIRECTED BY THE ENGINEER.

STATE OF TEXAS
BRENT L. CHRISTIAN
73921
REGISTERED PROFESSIONAL ENGINEER

Brent L. Christian
6/16/97

NO.	DATE	REVISION	APPROV.

Texas Department of Transportation
LOOP 1604

PAVEMENT MARKING
AND DELINEATION LAYOUT
BEGINNING OF PROJECT TO STA. 9+960
1 OF 14

Kimley-Horn and Associates, Inc.

Designed	REX	DIST	FED REG	FEDERAL AID PROJECT				HIGHWAY
Checked	BLC	15	6					LP1604
Drawn	PKG	COUNTY			CONTROL	SECT	JOB	SHEET
Checked	BLC	BEXAR			2452	01	035	347

LEVELS DISPLAYED
1 2 3 4 5 6 7 8 9 10 11 12 13 14 15 16
17 18 19 20 21 22 23 24 25 26 27 28 29 30 31 32
33 34 35 36 37 38 39 40 41 42 43 44 45 46 47 48
49 50 51 52 53 54 55 56 57 58 59 60 61 62 63

H:\DRAWINGS\673160 3\PM604TPM01.DGN

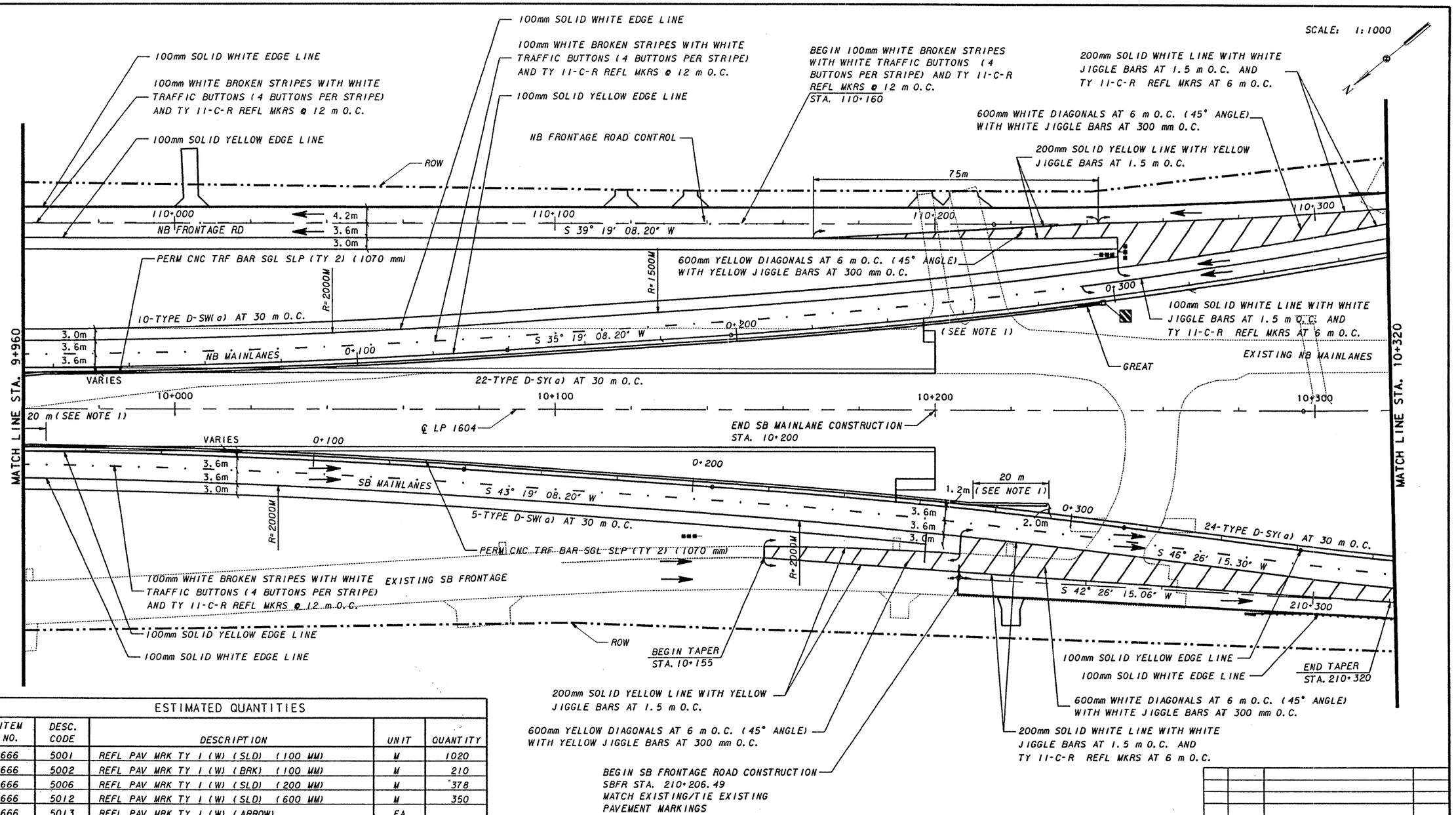

ESTIMATED QUANTITIES

ITEM NO.	DESC. CODE	DESCRIPTION	UNIT	QUANTITY
666	5001	REFL PAV MRK TY I (W) (SLD) (100 MM)	M	1020
666	5002	REFL PAV MRK TY I (W) (BRK) (100 MM)	M	210
666	5006	REFL PAV MRK TY I (W) (SLD) (200 MM)	M	378
666	5012	REFL PAV MRK TY I (W) (SLD) (600 MM)	M	350
666	5013	REFL PAV MRK TY I (W) (ARROW)	EA	
666	5017	REFL PAV MRK TY I (W) (WORD)	EA	
666	5024	REFL PAV MRK TY I (Y) (SLD) (100 MM)	M	928
666	5029	REFL PAV MRK TY I (Y) (SLD) (200 MM)	M	262
666	5032	REFL PAV MRK TY I (Y) (SLD) (600 MM)	M	60
672	5004	RAIS PAV MRKR CL A (JIGGLE) TY W	EA	1043
672	5005	RAIS PAV MRKR CL A (JIGGLE) TY Y	EA	192
672	5009	RAIS PAV MRKR CL B (REFL) TY II-A-A	EA	
672	5010	RAIS PAV MRKR CL B (REFL) TY II-C-R	EA	146
672	5016	RAIS PAV MRKR CL C (TRAF BTN) TY W	EA	365
672	5017	RAIS PAV MRKR CL C (TRAF BTN) TY Y	EA	
677	5003	ELIM EXT PAV MRK & MRKR (200 MM)	M	240
677	5006	ELIM EXT PAV MRK & MRKR (600MM)	M	10
659	5001	REMOV DELIN & OBJECT MARKER ASSMS	EA	11

(SEE SHEET 347 FOR LEGEND)

DELINEATION QUANTITIES

TYPE	EA	ASM	SPL MNT
D-SW (a)		15	
D-DW (a)			
D-SY (a)		46	
D-DY (a)			
OW-2SR (a)		2	
OW-2HP (a)		1	
OW-3L	1		
OW-3R			

NOTES

1. CTB IS PARALLEL WITH AND OFFSET FROM THE TWO EDGE LINES BY 1.2 m EXCEPT AT THE FLARES ON EACH END. FLARE RATE IS 10:1.
2. ANY PAVEMENT MARKING IN CONFLICT WITH PROPOSED MARKINGS SHALL BE REMOVED BY CONTRACTOR OR AS DIRECTED BY THE ENGINEER.

STATE OF TEXAS
BRENT L. CHRISTIAN
73921
REGISTERED PROFESSIONAL ENGINEER

Brent Christian
6/16/97

NO.	DATE	REVISION	APPROV.

Texas Department of Transportation
LOOP 1604

PAVEMENT MARKING AND DELINEATION LAYOUT
STA. 9+960 TO STA. 10+320
2 OF 14

Kimley-Horn and Associates, Inc.

Designed	REK	DIST	FED REG	FEDERAL AID PROJECT			HIGHWAY
Checked	BLC	15	6				LP1604
Drawn	PKG	COUNTY		CONTROL	SECT	JOB	SHEET
Checked	BLC	BEXAR		2452	01	035	348

LEVELS DISPLAYED
1 2 3 4 5 6 7 8 9 10 11 12 13 14 15 16
17 18 19 20 21 22 23 24 25 26 27 28 29 30 31 32
33 34 35 36 37 38 39 40 41 42 43 44 45 46 47 48
49 50 51 52 53 54 55 56 57 58 59 60 61 62 63

H:\DRAWINGS\67316031\PM\6041PM02.DGN

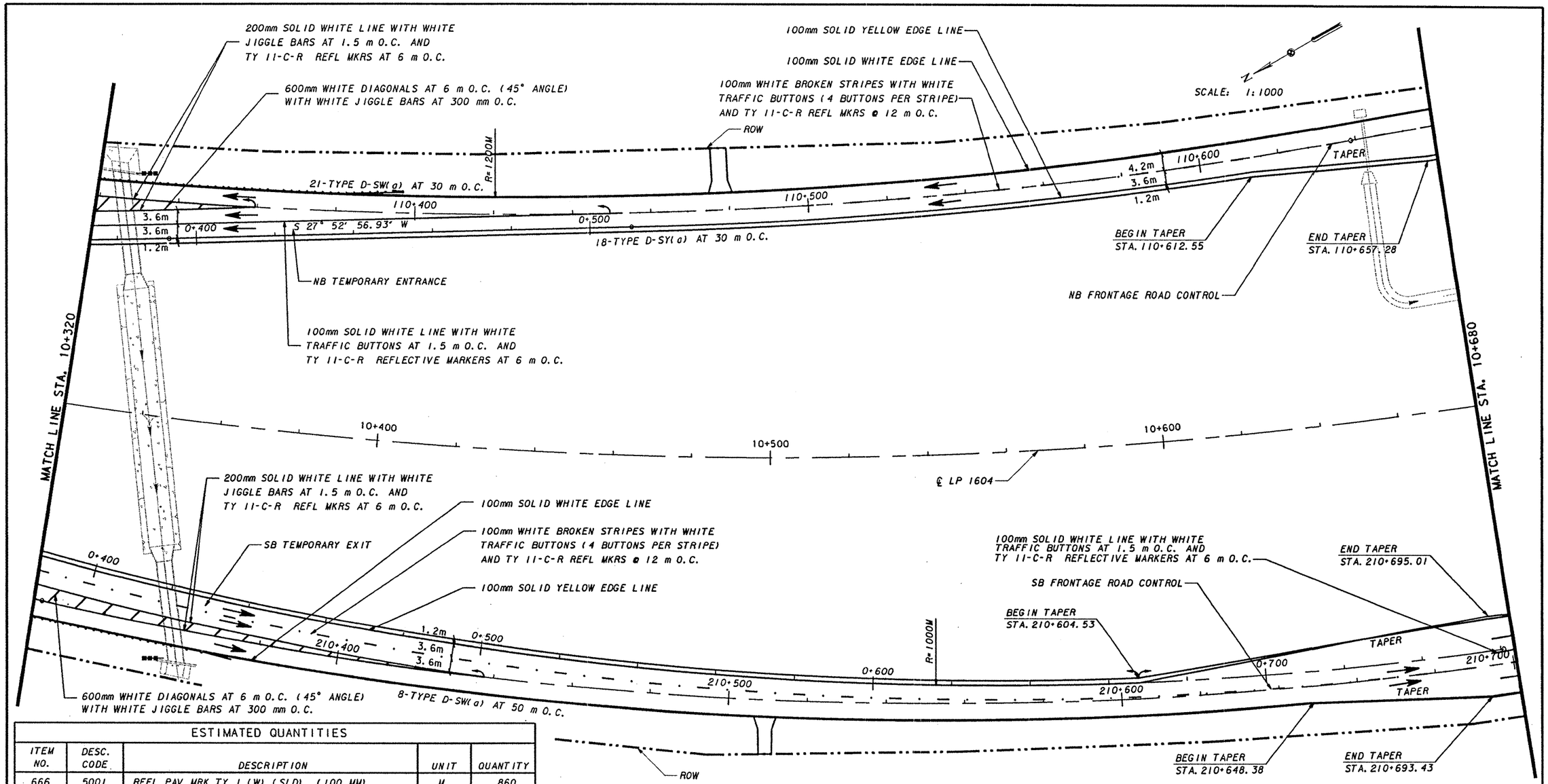

ESTIMATED QUANTITIES

ITEM NO.	DESC. CODE	DESCRIPTION	UNIT	QUANTITY
666	5001	REFL PAV MRK TY I (W) (SLD) (100 MM)	M	860
666	5002	REFL PAV MRK TY I (W) (BRK) (100 MM)	M	150
666	5006	REFL PAV MRK TY I (W) (SLD) (200 MM)	M	313
666	5012	REFL PAV MRK TY I (W) (SLD) (600 MM)	M	70
666	5013	REFL PAV MRK TY I (W) (ARROW)	EA	
666	5017	REFL PAV MRK TY I (W) (WORD)	EA	
666	5024	REFL PAV MRK TY I (Y) (SLD) (100 MM)	M	726
666	5029	REFL PAV MRK TY I (Y) (SLD) (200 MM)	M	
666	5032	REFL PAV MRK TY I (Y) (SLD) (600 MM)	M	
672	5004	RAIS PAV MRKR CL A (JIGGLE) TY W	EA	100
672	5005	RAIS PAV MRKR CL A (JIGGLE) TY Y	EA	
672	5009	RAIS PAV MRKR CL B (REFL) TY II-A-A	EA	
672	5010	RAIS PAV MRKR CL B (REFL) TY II-C-R	EA	100
672	5016	RAIS PAV MRKR CL C (TRAF BTN) TY W	EA	278
672	5017	RAIS PAV MRKR CL C (TRAF BTN) TY Y	EA	
677	5003	ELIM EXT PAV MRK & MRKR (200 MM)	M	
677	5006	ELIM EXT PAV MRK & MRKR (600MM)	M	
659	5001	REMOV DELIN & OBJECT MARKER ASSMS	EA	

(SEE SHEET 347 FOR LEGEND)

DELINEATION QUANTITIES

TYPE	EA	ASM	SPL MNT
D-SW (a)		29	
D-DW (a)			
D-SY (a)		18	
D-DY (a)			
OM-2SR (a)		2	
OM-2HP (a)			
OM-3L			
OM-3R			

NOTES

1. CTB IS PARALLEL WITH AND OFFSET FROM THE TWO EDGE LINES BY 1.2 m EXCEPT AT THE FLARES ON EACH END. FLARE RATE IS 10:1.
2. ANY PAVEMENT MARKING IN CONFLICT WITH PROPOSED MARKINGS SHALL BE REMOVED BY CONTRACTOR OR AS DIRECTED BY THE ENGINEER.

STATE OF TEXAS
BRENT L. CHRISTIAN
73921
REGISTERED PROFESSIONAL ENGINEER

Brent L. Christian
6/16/97

NO.	DATE	REVISION	APPROV.

Texas Department of Transportation
LOOP 1604

PAVEMENT MARKING AND DELINEATION LAYOUT
STA. 10+320 TO STA. 10+680
3 OF 14

Kimley-Horn and Associates, Inc.

Designed	REK	DIST	FED REG	FEDERAL AID PROJECT			HIGHWAY
Checked	BLC	15	6				LP1604
Drawn	PKG	COUNTY		CONTROL	SECT	JOB	SHEET
Checked	BLC	BEXAR		2452	01	035	349

LEVELS DISPLAYED
1 2 3 4 5 6 7 8 9 10 11 12 13 14 15 16
17 18 19 20 21 22 23 24 25 26 27 28 29 30 31 32
33 34 35 36 37 38 39 40 41 42 43 44 45 46 47 48
49 50 51 52 53 54 55 56 57 58 59 60 61 62 63

H:\DRAWINGS\673603\PM604TPM03.DGN

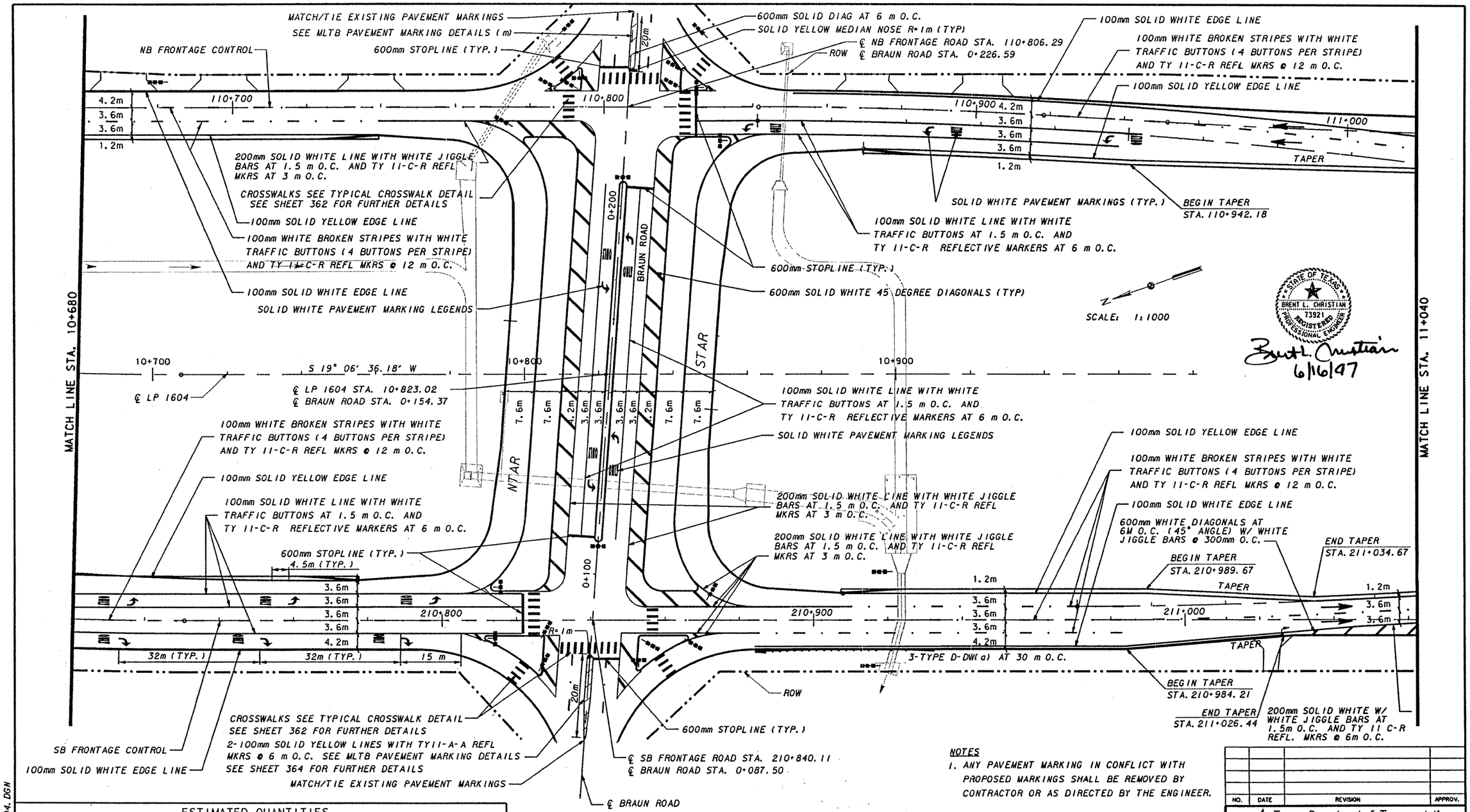

NOTES

1. ANY PAVEMENT MARKING IN CONFLICT WITH PROPOSED MARKINGS SHALL BE REMOVED BY CONTRACTOR OR AS DIRECTED BY THE ENGINEER.

(SEE SHEET 347 FOR LEGEND)

ESTIMATED QUANTITIES

ITEM NO.	DESC. CODE	DESCRIPTION	UNIT	QUANTITY
666	5001	REFL PAV MRK TY I (W) (SLD) (100 MM)	M	1700
666	5002	REFL PAV MRK TY I (W) (BRK) (100 MM)	M	290
666	5006	REFL PAV MRK TY I (W) (SLD) (200 MM)	M	700
666	5012	REFL PAV MRK TY I (W) (SLD) (600 MM)	M	600
666	5013	REFL PAV MRK TY I (W) (ARROW)	EA	13
666	5017	REFL PAV MRK TY I (W) (WORD)	EA	13
666	5024	REFL PAV MRK TY I (Y) (SLD) (100 MM)	M	1000
666	5029	REFL PAV MRK TY I (Y) (SLD) (200 MM)	M	
666	5032	REFL PAV MRK TY I (Y) (SLD) (600 MM)	M	
666	5034	REFL PAV MRK TY I (Y) (SLD) (MED NOSE)	EA	4

ESTIMATED QUANTITIES

ITEM NO.	DESC. CODE	DESCRIPTION	UNIT	QUANTITY
672	5004	RAIS PAV MRKR CL A (JIGGLE) TY W	EA	500
672	5005	RAIS PAV MRKR CL A (JIGGLE) TY Y	EA	
672	5009	RAIS PAV MRKR CL B (REFL) TY II-A-A	EA	20
672	5010	RAIS PAV MRKR CL B (REFL) TY II-C-R	EA	300
672	5016	RAIS PAV MRKR CL C (TRAF BTN) TY W	EA	2300
672	5017	RAIS PAV MRKR CL C (TRAF BTN) TY Y	EA	
677	5001	ELIM EXT PAV MRK & MRKR (100 MM)	M	
677	5018	ELIM EXT PAV MRK & MRKR (RAIS PAV MRKR)	EA	
659	5001	REMOV DELIN & OBJECT MARKER ASSMS	EA	15

DELINEATION QUANTITIES

TYPE	EA	ASM	SPL MNT
D-SW (a)			
D-DW (a)		3	
D-SY (a)			
D-DY (a)			
OM-2SR (a)		15	
OM-2HP (a)		8	
OM-3L			
OM-3R			

NO.	DATE	REVISION	APPROV.

Texas Department of Transportation
LOOP 1604

PAVEMENT MARKING AND DELINEATION LAYOUT
STA. 10+680 TO STA. 11+040

4 OF 14

Kimley-Horn and Associates, Inc.

Designed	REK	DIST	FED REG	FEDERAL AID PROJECT		HIGHWAY
Checked	BLC	15	6			LP1604
Drawn	PKG	COUNTY		CONTROL	SECT	JOB	SHEET
Checked	BLC	BEXAR		2452	01	035	350

LEVELS DISPLAYED
1 2 3 4 5 6 7 8 9 10 11 12 13 14 15 16
17 18 19 20 21 22 23 24 25 26 27 28 29 30 31 32
33 34 35 36 37 38 39 40 41 42 43 44 45 46 47 48
49 50 51 52 53 54 55 56 57 58 59 60 61 62

H:\DRAWINGS\6731603\PM6047PM04.DGN

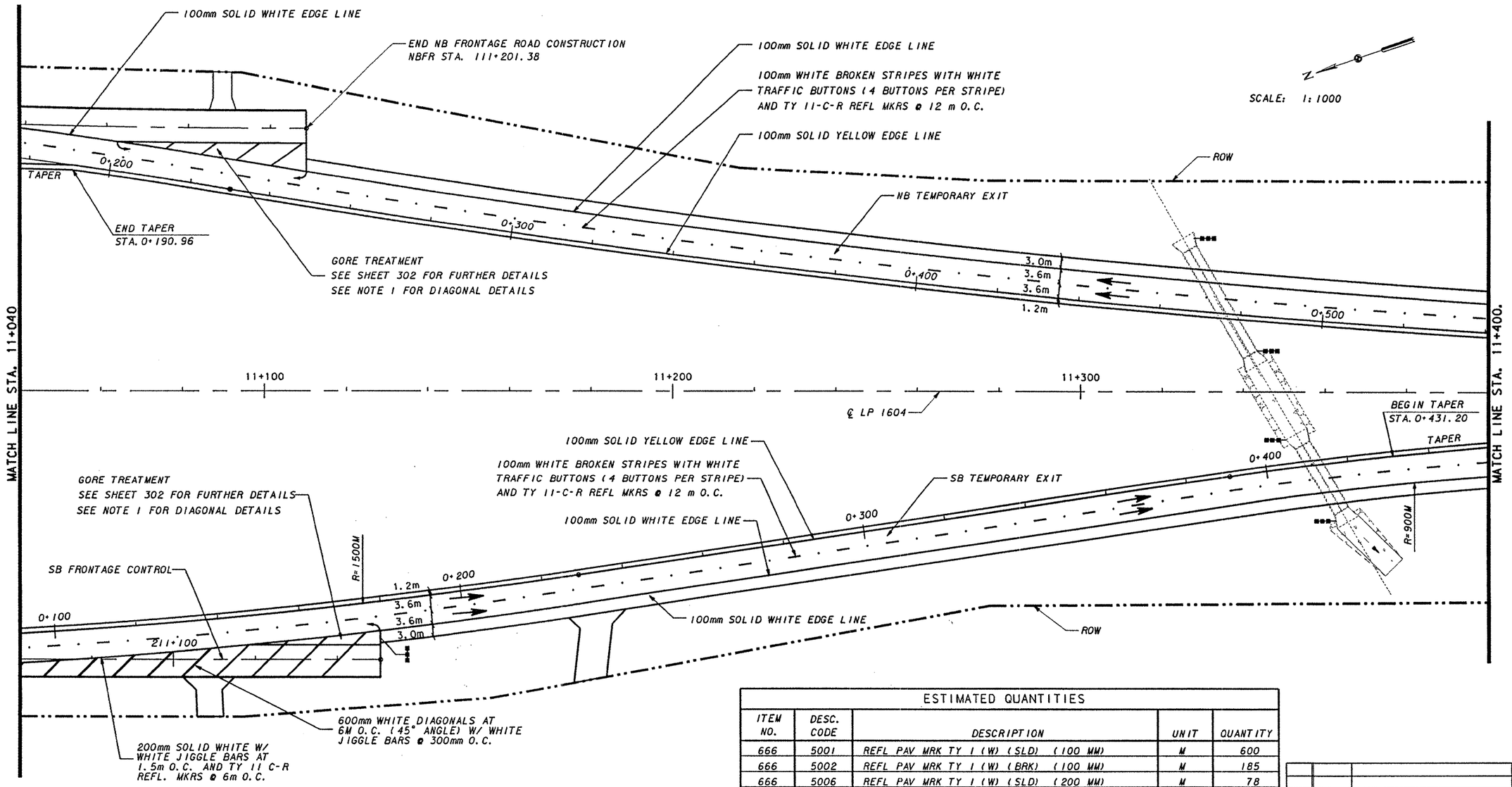

ESTIMATED QUANTITIES

ITEM NO.	DESC. CODE	DESCRIPTION	UNIT	QUANTITY
666	5001	REFL PAV MRK TY I (W) (SLD) (100 MM)	M	600
666	5002	REFL PAV MRK TY I (W) (BRK) (100 MM)	M	185
666	5006	REFL PAV MRK TY I (W) (SLD) (200 MM)	M	78
666	5012	REFL PAV MRK TY I (W) (SLD) (600 MM)	M	140
666	5013	REFL PAV MRK TY I (W) (ARROW)	EA	
666	5017	REFL PAV MRK TY I (W) (WORD)	EA	
666	5024	REFL PAV MRK TY I (Y) (SLD) (100 MM)	M	726
666	5029	REFL PAV MRK TY I (Y) (SLD) (200 MM)	M	79
666	5032	REFL PAV MRK TY I (Y) (SLD) (600 MM)	M	
672	5004	RAIS PAV MRKR CL A (JIGGLE) TY W	EA	710
672	5005	RAIS PAV MRKR CL A (JIGGLE) TY Y	EA	
672	5009	RAIS PAV MRKR CL B (REFL) TY II-A-A	EA	
672	5010	RAIS PAV MRKR CL B (REFL) TY II-C-R	EA	74
672	5016	RAIS PAV MRKR CL C (TRAF BTN) TY W	EA	242
672	5017	RAIS PAV MRKR CL C (TRAF BTN) TY Y	EA	
677	5003	ELIM EXT PAV MRK & MRKR (200 MM)	M	
677	5006	ELIM EXT PAV MRK & MRKR (600MM)	M	
659	5001	REMOV DELIN & OBJECT MARKER ASSMS	EA	4

(SEE SHEET 347 FOR LEGEND)

DELINEATION QUANTITIES

TYPE	EA	ASM	SPL MNT
D-SW (a)			
D-DW (a)			
D-SY (a)			
D-DY (a)			
OM-2SR (a)		4	
OM-2HP (a)		1	
OM-3L			
OM-3R			

STATE OF TEXAS
BRENT L. CHRISTIAN
73921
REGISTERED
PROFESSIONAL ENGINEER

Brent L. Christian
6/6/97

NOTES

1. STANDARD GORE TREATMENT WITH 600mm SOLID WHITE DIAGONALS WITH WHITE JIGGLE BARS AT 300mm O.C.

2. ANY PAVEMENT MARKING IN CONFLICT WITH PROPOSED MARKINGS SHALL BE REMOVED BY CONTRACTOR OR AS DIRECTED BY THE ENGINEER.

NO.	DATE	REVISION	APPROV.

Texas Department of Transportation
LOOP 1604

PAVEMENT MARKING
AND DELINEATION LAYOUT
STA. 11+040 TO STA. 11+400
5 OF 14

Kimley-Horn and Associates, Inc.

Designed	REK	D	ED REG	FEDERAL AID PROJECT			HIGHWAY
Checked	BLC	15	6				LP1604
Drawn	PKG	COUNTY		CONTROL	SECT	JOB	SHEET
Checked	BLC	BEXAR		2452	01	035	351

LEVELS DISPLAYED
1 2 3 4 5 6 7 8 9 10 11 12 13 14 15 16
17 18 19 20 21 22 23 24 25 26 27 28 29 30 31 32
33 34 35 36 37 38 39 40 41 42 43 44 45 46 47 48
49 50 51 52 53 54 55 56 57 58 59 60 61 62 63

H:\DRAWINGS\67316O3\PM604TPM05.DGN

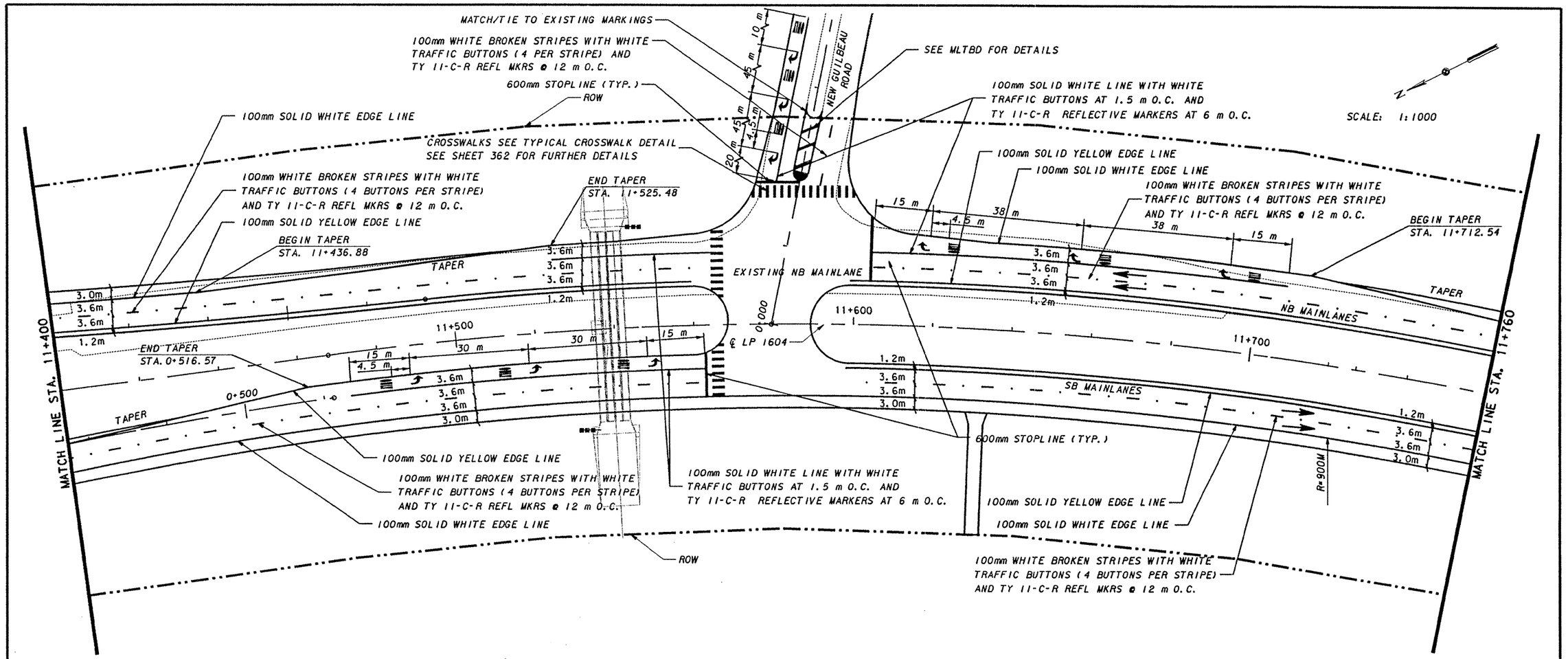

ESTIMATED QUANTITIES

ITEM NO.	DESC. CODE	DESCRIPTION	UNIT	QUANTITY
666	5001	REFL PAV MRK TY I (W) (SLD) (100 MM)	M	1069
666	5002	REFL PAV MRK TY I (W) (BRK) (100 MM)	M	165
666	5006	REFL PAV MRK TY I (W) (SLD) (200 MM)	M	
666	5012	REFL PAV MRK TY I (W) (SLD) (600 MM)	M	140
666	5013	REFL PAV MRK TY I (W) (ARROW)	EA	9
666	5017	REFL PAV MRK TY I (W) (WORD)	EA	9
666	5024	REFL PAV MRK TY I (Y) (SLD) (100 MM)	M	674
666	5029	REFL PAV MRK TY I (Y) (SLD) (200 MM)	M	
666	5032	REFL PAV MRK TY I (Y) (SLD) (600 MM)	M	15
666	5034	REFL PAV MRK TY I (Y) (SLD) (MED NOSE)	EA	1
672	5004	RAIS PAV MRKR CL A (JIGGLE) TY W	EA	
672	5005	RAIS PAV MRKR CL A (JIGGLE) TY Y	EA	
672	5009	RAIS PAV MRKR CL B (REFL) TY II-A-A	EA	
672	5010	RAIS PAV MRKR CL B (REFL) TY II-C-R	EA	97
672	5016	RAIS PAV MRKR CL C (TRAF BTN) TY W	EA	397
672	5017	RAIS PAV MRKR CL C (TRAF BTN) TY Y	EA	
677	5003	ELIM EXT PAV MRK & MRKR (200 MM)	M	
677	5006	ELIM EXT PAV MRK & MRKR (600MM)	M	
659	5001	REMOV DELIN & OBJECT MARKER ASSMS	EA	12

(SEE SHEET 347 FOR LEGEND)

DELINEATION QUANTITIES

TYPE	EA	ASM	SPL MNT
D-SW (a)			
D-DW (a)			
D-SY (a)			
D-DY (a)			
OM-2SR (a)		2	
OM-2HP (a)			
OM-3L			
OM-3R			

NOTES

1. ANY PAVEMENT MARKING IN CONFLICT WITH PROPOSED MARKINGS SHALL BE REMOVED BY CONTRACTOR OR AS DIRECTED BY THE ENGINEER.

STATE OF TEXAS
BRENT L. CHRISTIAN
73921
REGISTERED
PROFESSIONAL ENGINEER

Brent L. Christian
6/16/97

NO.	DATE	REVISION	APPROV.

Texas Department of Transportation
LOOP 1604

PAVEMENT MARKING AND DELINEATION LAYOUT
STA. 11+400 TO STA. 11+760

6 OF 14

Kimley-Horn and Associates, Inc.

Designed	REK	DIST	FED REG	FEDERAL AID PROJECT #				HIGHWAY
Checked	BLC	15	6					LP1604
Drawn	PKG	COUNTY		CONTROL	SECT	JOB		SHEET
Checked	BLC	BEXAR		2452	01	035		352

LEVELS DISPLAYED
1 2 3 4 5 6 7 8 9 10 11 12 13 14 15 16
17 18 19 20 21 22 23 24 25 26 27 28 29 30 31 32
33 34 35 36 37 38 39 40 41 42 43 44 45 46 47 48
49 50 51 52 53 54 55 56 57 58 59 60 61 62 63

H:\DRAWINGS\673160 3\PM604TPM06.DGN

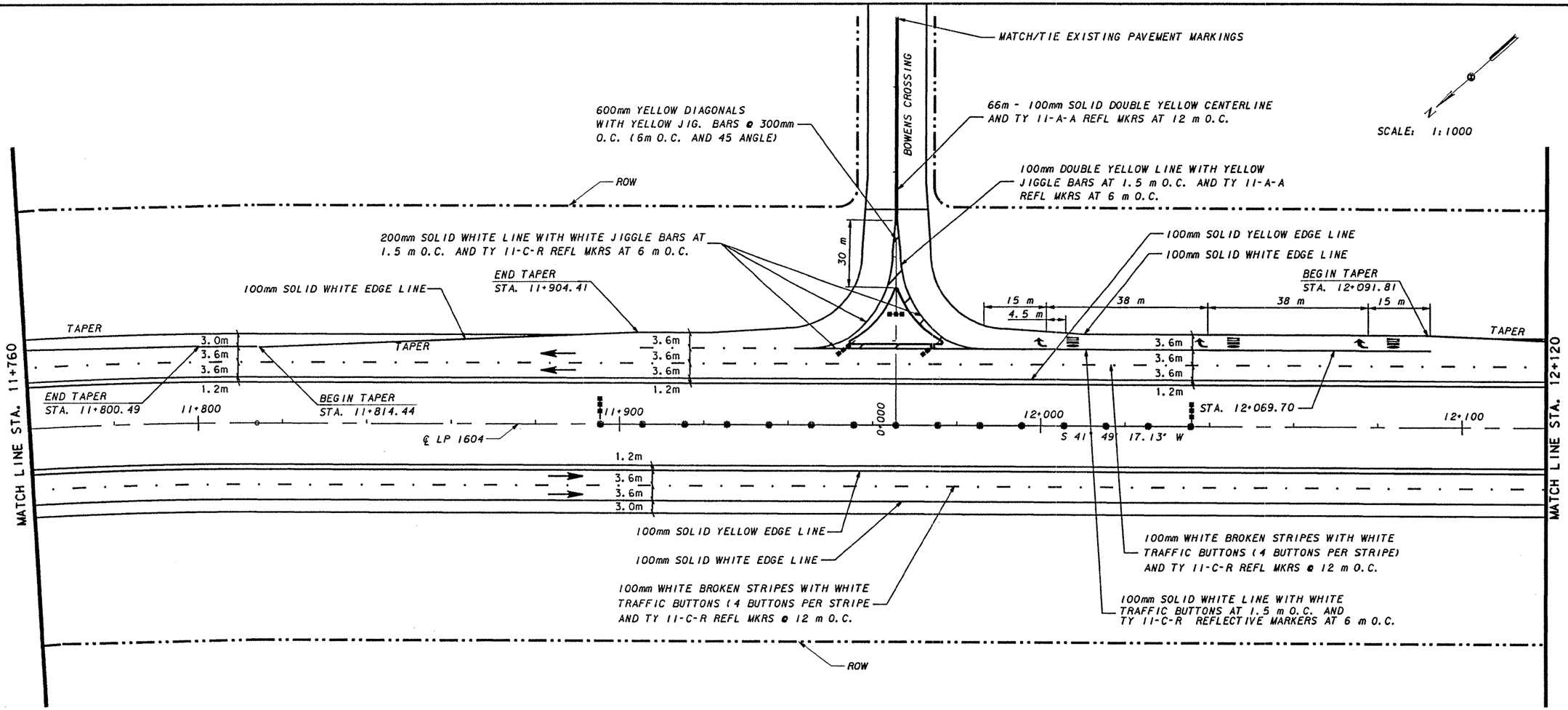

ESTIMATED QUANTITIES

ITEM NO.	DESC. CODE	DESCRIPTION	UNIT	QUANTITY
666	5001	REFL PAV MRK TY I (W) (SLD) (100 MM)	M	745
666	5002	REFL PAV MRK TY I (W) (BRK) (100 MM)	M	180
666	5006	REFL PAV MRK TY I (W) (SLD) (200 MM)	M	146
666	5012	REFL PAV MRK TY I (W) (SLD) (600 MM)	M	
666	5013	REFL PAV MRK TY I (W) (ARROW)	EA	
666	5017	REFL PAV MRK TY I (W) (WORD)	EA	
666	5024	REFL PAV MRK TY I (Y) (SLD) (100 MM)	M	250
666	5029	REFL PAV MRK TY I (Y) (SLD) (200 MM)	M	
666	5032	REFL PAV MRK TY I (Y) (SLD) (600 MM)	M	25
672	5004	RAIS PAV MRKR CL A (JIGGLE) TY W	EA	
672	5005	RAIS PAV MRKR CL A (JIGGLE) TY Y	EA	170
672	5009	RAIS PAV MRKR CL B (REFL) TY II-A-A	EA	21
672	5010	RAIS PAV MRKR CL B (REFL) TY II-C-R	EA	84
672	5016	RAIS PAV MRKR CL C (TRAF BTN) TY W	EA	240
672	5017	RAIS PAV MRKR CL C (TRAF BTN) TY Y	EA	
677	5003	ELIM EXT PAV MRK & MRKR (200 MM)	M	
677	5006	ELIM EXT PAV MRK & MRKR (600MM)	M	
659	5001	REMOV DELIN & OBJECT MARKER ASSMS	EA	11

(SEE SHEET 347 FOR LEGEND)

DELINEATION QUANTITIES

TYPE	EA	ASM	SPL MNT
D-SW (a)			
D-DW (a)			
D-SY (a)			
D-DY (a)			
OM-2SR (a)		4	
OM-2HP (a)		1	
OM-3L			
OM-3R			

NOTES

1. ANY PAVEMENT MARKING IN CONFLICT WITH PROPOSED MARKINGS SHALL BE REMOVED BY CONTRACTOR OR AS DIRECTED BY THE ENGINEER.

STATE OF TEXAS
BRENT L. CHRISTIAN
73921
REGISTERED PROFESSIONAL ENGINEER

Brent L. Christian
6/16/97

NO.	DATE	REVISION	APPROV.

Texas Department of Transportation
LOOP 1604

PAVEMENT MARKING AND DELINEATION LAYOUT
STA. 11+760 TO STA. 12+120

Kimley-Horn and Associates, Inc.

Designed	REK	DIST	FED REG	FEDERAL AID PROJECT •				HIGHWAY
Checked	BLC	15	6					LP1604
Drawn	PKG	COUNTY			CONTROL	SECT	JOB	SHEET
Checked	BLC	BEXAR			2452	01	035	353

LEVELS DISPLAYED
1 2 3 4 5 6 7 8 9 10 11 12 13 14 15 16
17 18 19 20 21 22 23 24 25 26 27 28 29 30 31 32
33 34 35 36 37 38 39 40 41 42 43 44 45 46 47 48
49 50 51 52 53 54 55 56 57 58 59 60 61 62 63

H:\DRAWINGS\673160 3\PM604TPM07.DGN

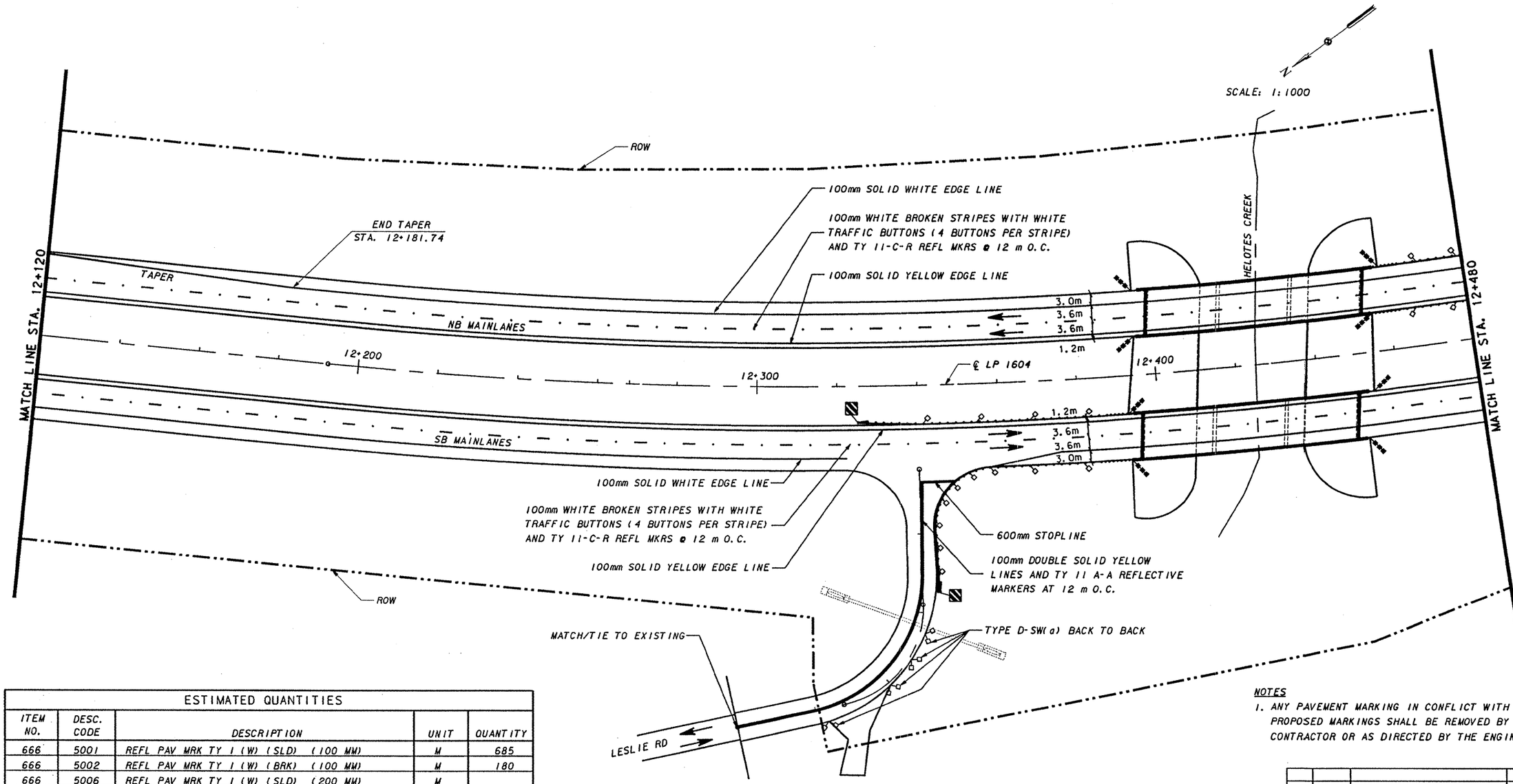

NOTES

1. ANY PAVEMENT MARKING IN CONFLICT WITH PROPOSED MARKINGS SHALL BE REMOVED BY CONTRACTOR OR AS DIRECTED BY THE ENGINEER.

ESTIMATED QUANTITIES				
ITEM NO.	DESC. CODE	DESCRIPTION	UNIT	QUANTITY
666	5001	REFL PAV MRK TY 1 (W) (SLD) (100 MM)	M	685
666	5002	REFL PAV MRK TY 1 (W) (BRK) (100 MM)	M	180
666	5006	REFL PAV MRK TY 1 (W) (SLD) (200 MM)	M	
666	5012	REFL PAV MRK TY 1 (W) (SLD) (600 MM)	M	10
666	5013	REFL PAV MRK TY 1 (W) (ARROW)	EA	
666	5017	REFL PAV MRK TY 1 (W) (WORD)	EA	
666	5024	REFL PAV MRK TY 1 (Y) (SLD) (100 MM)	M	902
666	5029	REFL PAV MRK TY 1 (Y) (SLD) (200 MM)	M	
666	5032	REFL PAV MRK TY 1 (Y) (SLD) (600 MM)	M	
672	5004	RAIS PAV MRKR CL A (JIGGLE) TY W	EA	
672	5005	RAIS PAV MRKR CL A (JIGGLE) TY Y	EA	
672	5009	RAIS PAV MRKR CL B (REFL) TY 11-A-A	EA	16
672	5010	RAIS PAV MRKR CL B (REFL) TY 11-C-R	EA	60
672	5016	RAIS PAV MRKR CL C (TRAF BTN) TY W	EA	240
672	5017	RAIS PAV MRKR CL C (TRAF BTN) TY Y	EA	
677	5003	ELIM EXT PAV MRK & MRKR (200 MM)	M	
677	5006	ELIM EXT PAV MRK & MRKR (600MM)	M	
659	5001	REMOV DELIN & OBJECT MARKER ASSMS	EA	8

(SEE SHEET 347 FOR LEGEND)

DELINEATION QUANTITIES			
TYPE	EA	ASM	SPL MNT
D-SW (a)		17	8
D-DW (a)			
D-SY (a)			
D-DY (a)			
OM-2SR (a)		8	
OM-2HP (a)			
OM-3L	1		
OM-3R	1		

STATE OF TEXAS
BRENT L. CHRISTIAN
73921
REGISTERED PROFESSIONAL ENGINEER

Brent L. Christian
6/16/97

NO.	DATE	REVISION	APPROV.

Texas Department of Transportation
LOOP 1604

PAVEMENT MARKING AND DELINEATION LAYOUT
STA. 12+120 TO STA. 12+480

8 OF 14

Kimley-Horn and Associates, Inc.

Designed	REK	DIST	FED REG	FEDERAL AID PROJECT			HIGHWAY
Checked	BLC	15	6				LP1604
Drawn	PKG	COUNTY		CONTROL	SECT	JOB	SHEET
Checked	BLC	BEXAR		2452	01	035	354

LEVELS DISPLAYED

H:\DRAWINGS\6731603\PM\604TPM08.DGN

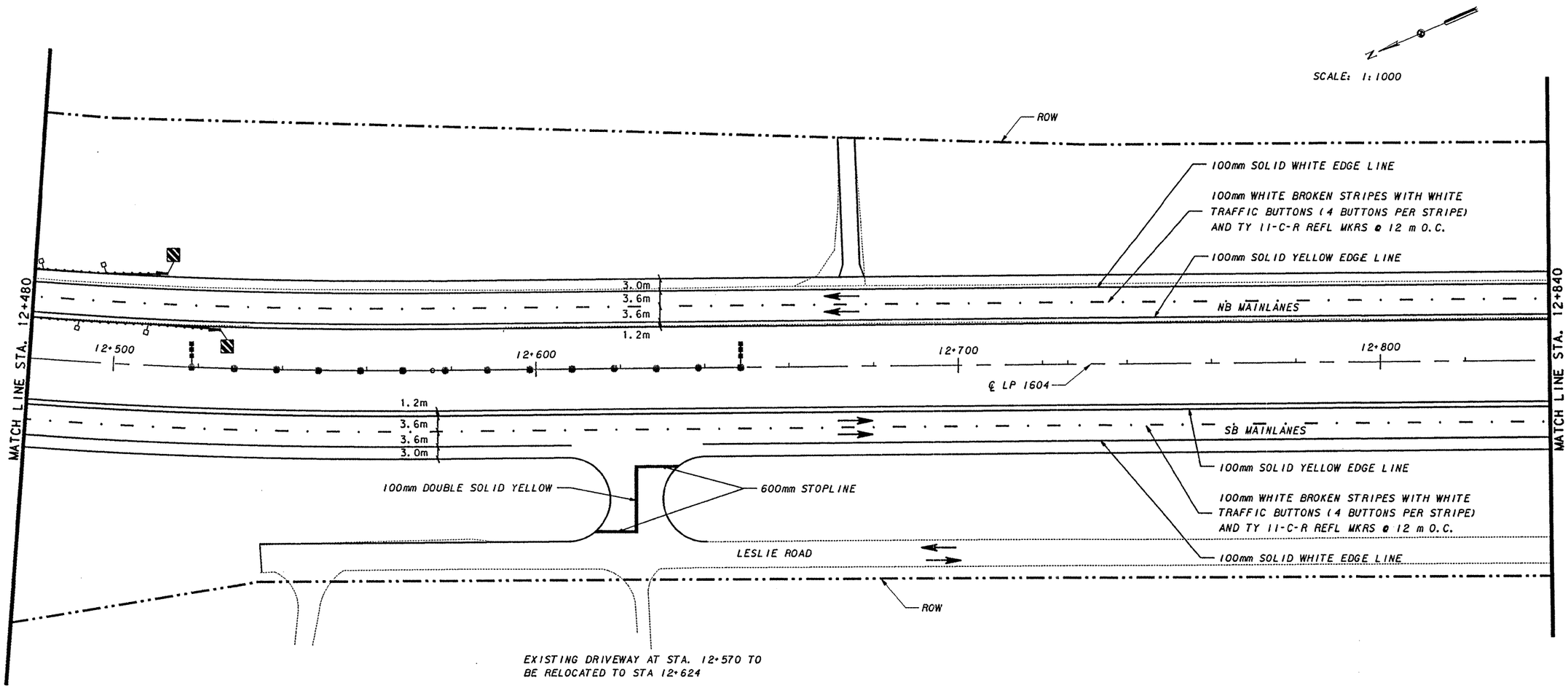

ESTIMATED QUANTITIES				
ITEM NO.	DESC. CODE	DESCRIPTION	UNIT	QUANTITY
666	5001	REFL PAV MRK TY I (W) (SLD) (100 MM)	M	650
666	5002	REFL PAV MRK TY I (W) (BRK) (100 MM)	M	180
666	5006	REFL PAV MRK TY I (W) (SLD) (200 MM)	M	
666	5012	REFL PAV MRK TY I (W) (SLD) (600 MM)	M	20
666	5013	REFL PAV MRK TY I (W) (ARROW)	EA	
666	5017	REFL PAV MRK TY I (W) (WORD)	EA	
666	5024	REFL PAV MRK TY I (Y) (SLD) (100 MM)	M	752
666	5029	REFL PAV MRK TY I (Y) (SLD) (200 MM)	M	
666	5032	REFL PAV MRK TY I (Y) (SLD) (600 MM)	M	
672	5004	RAIS PAV MRKR CL A (JIGGLE) TY W	EA	
672	5005	RAIS PAV MRKR CL A (JIGGLE) TY Y	EA	
672	5009	RAIS PAV MRKR CL B (REFL) TY II-A-A	EA	
672	5010	RAIS PAV MRKR CL B (REFL) TY II-C-R	EA	60
672	5016	RAIS PAV MRKR CL C (TRAF BTN) TY W	EA	240
672	5017	RAIS PAV MRKR CL C (TRAF BTN) TY Y	EA	
677	5003	ELIM EXT PAV MRK & MRKR (200 MM)	M	
677	5006	ELIM EXT PAV MRK & MRKR (600MM)	M	
659	5001	REMOV DELIN & OBJECT MARKER ASSMS	EA	3

(SEE SHEET 347 FOR LEGEND)

DELINEATION QUANTITIES			
TYPE	EA	ASM	SPL MNT
D-SW (a)		4	
D-DW (a)			
D-SY (a)			
D-DY (a)			
OM-2SR (a)		2	
OM-2HP (a)			
OM-3L	1		
OM-3R	1		

NOTES
1. ANY PAVEMENT MARKING IN CONFLICT WITH PROPOSED MARKINGS SHALL BE REMOVED BY CONTRACTOR OR AS DIRECTED BY THE ENGINEER.

STATE OF TEXAS
BRENT L. CHRISTIAN
73921
REGISTERED PROFESSIONAL ENGINEER

Brent L. Christian
6/16/97

NO.	DATE	REVISION	APPROV.

Texas Department of Transportation
LOOP 1604

PAVEMENT MARKING
AND DELINEATION LAYOUT
STA. 12+480 TO STA. 12+840

9 OF 14

Kimley-Horn and Associates, Inc.

Designed	REK	DIST	FED REG	FEDERAL AID PROJECT				HIGHWAY
Checked	BLC	15	6					LP1604
Drawn	PKG	COUNTY			CONTROL	SECT	JOB	SHEET
Checked	BLC	BEXAR			2452	01	035	355

LEVELS DISPLAYED
1 2 3 4 5 6 7 8 9 10 11 12 13 14 15 16
17 18 19 20 21 22 23 24 25 26 27 28 29 30 31 32
33 34 35 36 37 38 39 40 41 42 43 44 45 46 47 48
49 50 51 52 53 54 55 56 57 58 59 60 61 62 63

H:\DRAWINGS\6731603\PM\604TPM09.DGN

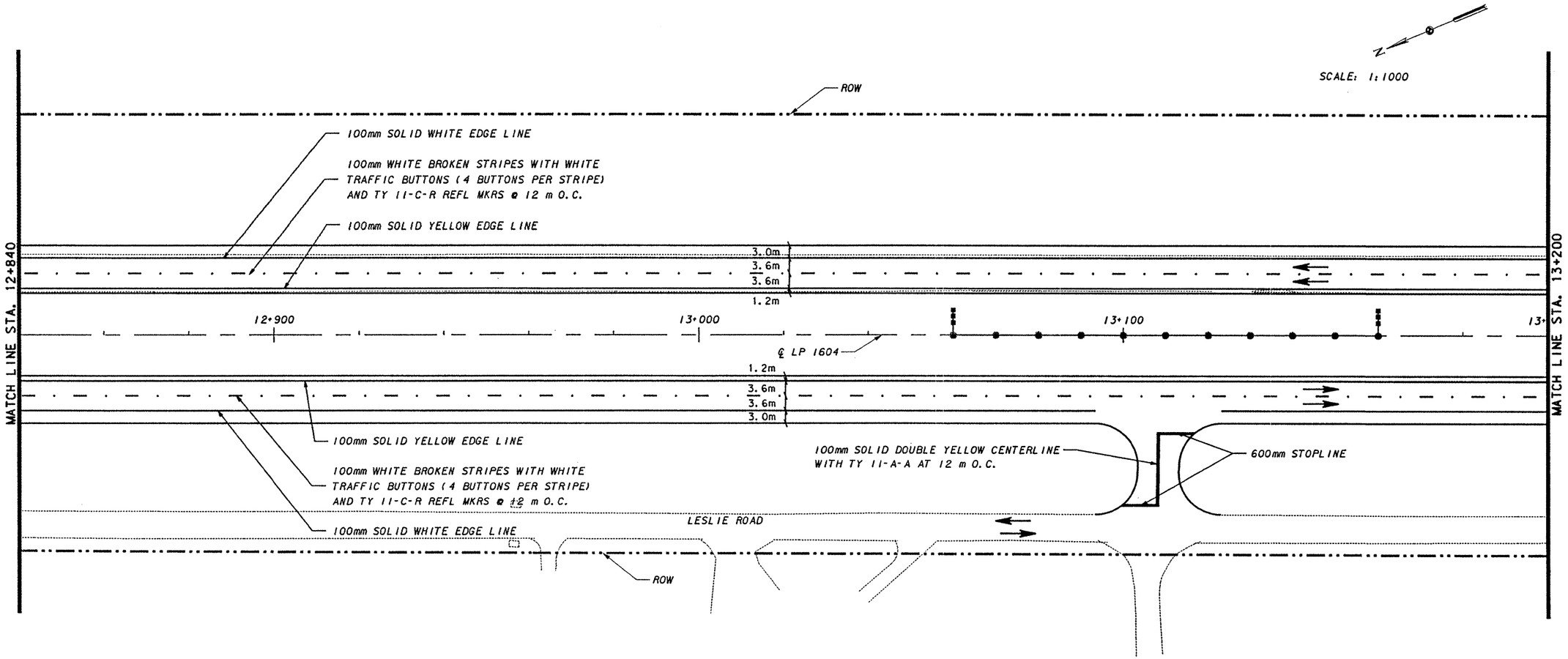

ESTIMATED QUANTITIES				
ITEM NO.	DESC. CODE	DESCRIPTION	UNIT	QUANTITY
666	5001	REFL PAV MRK TY I (W) (SLD) (100 MM)	M	695
666	5002	REFL PAV MRK TY I (W) (BRK) (100 MM)	M	180
666	5006	REFL PAV MRK TY I (W) (SLD) (200 MM)	M	
666	5012	REFL PAV MRK TY I (W) (SLD) (600 MM)	M	20
666	5013	REFL PAV MRK TY I (W) (ARROW)	EA	
666	5017	REFL PAV MRK TY I (W) (WORD)	EA	
666	5024	REFL PAV MRK TY I (Y) (SLD) (100 MM)	M	752
666	5029	REFL PAV MRK TY I (Y) (SLD) (200 MM)	M	
666	5032	REFL PAV MRK TY I (Y) (SLD) (600 MM)	M	
672	5004	RAIS PAV MRKR CL A (JIGGLE) TY W	EA	
672	5005	RAIS PAV MRKR CL A (JIGGLE) TY Y	EA	
672	5009	RAIS PAV MRKR CL B (REFL) TY II-A-A	EA	4
672	5010	RAIS PAV MRKR CL B (REFL) TY II-C-R	EA	60
672	5016	RAIS PAV MRKR CL C (TRAF BTN) TY W	EA	240
672	5017	RAIS PAV MRKR CL C (TRAF BTN) TY Y	EA	
677	5003	ELIM EXT PAV MRK & MRKR (200 MM)	M	
677	5006	ELIM EXT PAV MRK & MRKR (600MM)	M	
659	5001	REMOV DELIN & OBJECT MARKER ASSMS	EA	

(SEE SHEET 347 FOR LEGEND)

DELINEATION QUANTITIES			
TYPE	EA	ASM	SPL MNT
D-SW (a)			
D-DW (a)			
D-SY (a)			
D-DY (a)			
OM-2SR (a)		2	
OM-2HP (a)			
OM-3L			
OM-3R			

NOTES

1. ANY PAVEMENT MARKING IN CONFLICT WITH PROPOSED MARKINGS SHALL BE REMOVED BY CONTRACTOR OR AS DIRECTED BY THE ENGINEER.

STATE OF TEXAS
BRENT L. CHRISTIAN
73921
REGISTERED PROFESSIONAL ENGINEER

Brent L. Christian
6/16/97

NO.	DATE	REVISION	APPROV.

Texas Department of Transportation
LOOP 1604

PAVEMENT MARKING
AND DELINEATION LAYOUT
STA. 12+840 TO STA. 13+200
10 OF 14

Kimley-Horn and Associates, Inc.

Designed	REK	DIST	FED REG	FEDERAL AID PROJECT				HIGHWAY
Checked	BLC	15	6					LP1604
Drawn	PKG	COUNTY		CONTROL	SECT	JOB		SHEET
Checked	BLC	BEXAR		2452	01	035		356

LEVELS DISPLAYED																	
1	2	3	4	5	6	7	8	9	10	11	12	13	14	15	16		
17	18	19	20	21	22	23	24	25	26	27	28	29	30	31	32		
33	34	35	36	37	38	39	40	41	42	43	44	45	46	47	48		
49	50	51	52	53	54	55		57	58	59	60	61	62	63			

H:\DRAWINGS\67316031.PMK604TPM10.DGN

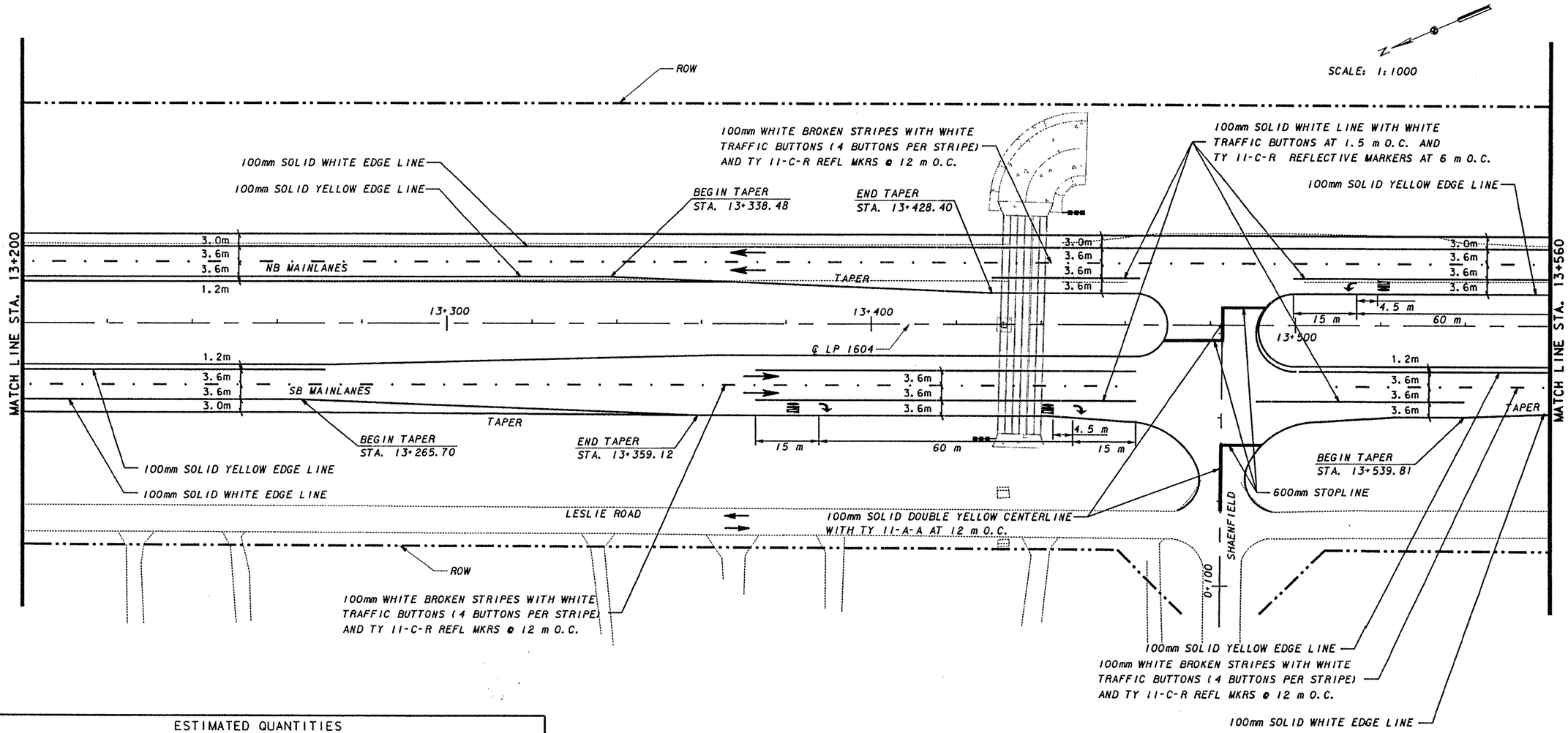

ESTIMATED QUANTITIES

ITEM NO.	DESC. CODE	DESCRIPTION	UNIT	QUANTITY
666	5001	REFL PAV MRK TY I (W) (SLD) (100 MM)	M	950
666	5002	REFL PAV MRK TY I (W) (BRK) (100 MM)	M	170
666	5006	REFL PAV MRK TY I (W) (SLD) (200 MM)	M	
666	5012	REFL PAV MRK TY I (W) (SLD) (600 MM)	M	35
666	5013	REFL PAV MRK TY I (W) (ARROW)	EA	3
666	5017	REFL PAV MRK TY I (W) (WORD)	EA	3
666	5024	REFL PAV MRK TY I (Y) (SLD) (100 MM)	M	527
666	5029	REFL PAV MRK TY I (Y) (SLD) (200 MM)	M	
666	5032	REFL PAV MRK TY I (Y) (SLD) (600 MM)	M	
672	5004	RAIS PAV MRKR CL A (JIGGLE) TY W	EA	
672	5005	RAIS PAV MRKR CL A (JIGGLE) TY Y	EA	
672	5009	RAIS PAV MRKR CL B (REFL) TY 11-A-A	EA	4
672	5010	RAIS PAV MRKR CL B (REFL) TY 11-C-R	EA	100
672	5016	RAIS PAV MRKR CL C (TRAF BTN) TY W	EA	397
672	5017	RAIS PAV MRKR CL C (TRAF BTN) TY Y	EA	
677	5003	ELIM EXT PAV MRK & MRKR (200 MM)	M	
677	5006	ELIM EXT PAV MRK & MRKR (600MM)	M	
659	5001	REMOV DELIN & OBJECT MARKER ASSMS	EA	5

(SEE SHEET 347 FOR LEGEND)

DELINEATION QUANTITIES

TYPE	EA	ASM	SPL MNT
D-SW (a)			
D-DW (a)			
D-SY (a)			
D-DY (a)			
OM-2SR (a)		2	
OM-2HP (a)			
OM-3L			
OM-3R			

NOTES

1. ANY PAVEMENT MARKING IN CONFLICT WITH PROPOSED MARKINGS SHALL BE REMOVED BY CONTRACTOR OR AS DIRECTED BY THE ENGINEER.

STATE OF TEXAS
BRENT L. CHRISTIAN
73921
REGISTERED PROFESSIONAL ENGINEER

Brent L. Christian
6/16/97

NO.	DATE	REVISION	APPROV.

Texas Department of Transportation
LOOP 1604

PAVEMENT MARKING AND DELINEATION LAYOUT
STA. 13+200 TO STA. 13+560
11 OF 14

Kimley-Horn and Associates, Inc.

Designed	REK	DIST	FED REG	FEDERAL AID PROJECT			HIGHWAY
Checked	BLC	15	6				LP1604
Drawn	PKG	COUNTY		CONTROL	SECT	JOB	SHEET
Checked	BLC	BEXAR		2452	01	035	357

LEVELS DISPLAYED
1 2 3 4 5 6 7 8 9 10 11 12 13 14 15 16
17 18 19 20 21 22 23 24 25 26 27 28 29 30 31 32
33 34 35 36 37 38 39 40 41 42 43 44 45 46 47 48
49 50 51 52 53 54 55 56 57 58 59 60 61 62 63

H:\DRAWINGS\67316031\PMK604TPW11.DGN

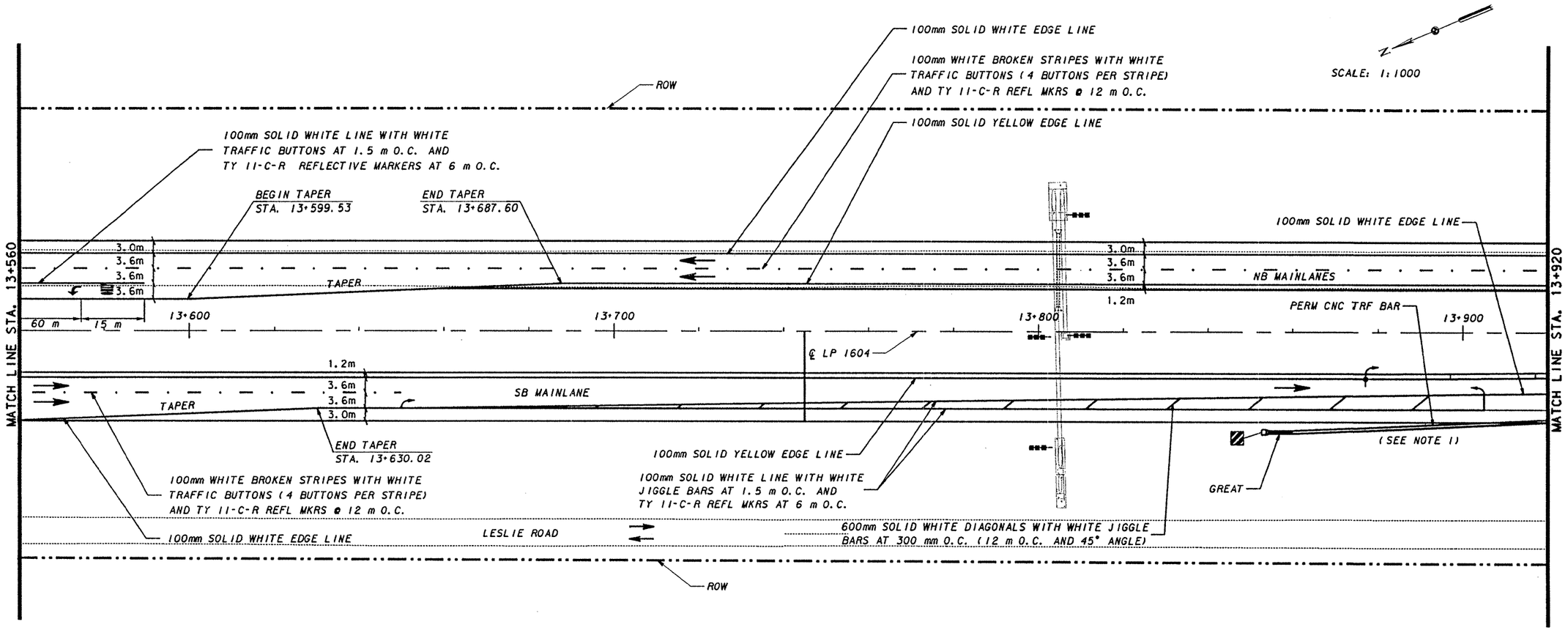

ESTIMATED QUANTITIES

ITEM NO.	DESC. CODE	DESCRIPTION	UNIT	QUANTITY
666	5001	REFL PAV MRK TY I (W) (SLD) (100 MM)	M	1005
666	5002	REFL PAV MRK TY I (W) (BRK) (100 MM)	M	115
666	5006	REFL PAV MRK TY I (W) (SLD) (200 MM)	M	
666	5012	REFL PAV MRK TY I (W) (SLD) (600 MM)	M	50
666	5013	REFL PAV MRK TY I (W) (ARROW)	EA	1
666	5017	REFL PAV MRK TY I (W) (WORD)	EA	1
666	5024	REFL PAV MRK TY I (Y) (SLD) (100 MM)	M	720
666	5029	REFL PAV MRK TY I (Y) (SLD) (200 MM)	M	
666	5032	REFL PAV MRK TY I (Y) (SLD) (600 MM)	M	
672	5004	RAIS PAV MRKR CL A (JIGGLE) TY W	EA	397
672	5005	RAIS PAV MRKR CL A (JIGGLE) TY Y	EA	
672	5009	RAIS PAV MRKR CL B (REFL) TY II-A-A	EA	
672	5010	RAIS PAV MRKR CL B (REFL) TY II-C-R	EA	43
672	5016	RAIS PAV MRKR CL C (TRAF BTN) TY W	EA	150
672	5017	RAIS PAV MRKR CL C (TRAF BTN) TY Y	EA	
677	5003	ELIM EXT PAV MRK & MRKR (200 MM)	M	
677	5006	ELIM EXT PAV MRK & MRKR (600MM)	M	
659	5001	REMOV DELIN & OBJECT MARKER ASSMS	EA	4

(SEE SHEET 347 FOR LEGEND)

DELINEATION QUANTITIES

TYPE	EA	ASM	SPL MNT
D-SW (a)			
D-DW (a)			
D-SY (a)			
D-DY (a)			
OM-2SR (a)		4	
OM-2HP (a)			
OM-3L			
OM-3R	1		

NOTES

1. CTB IS PARALLEL WITH AND OFFSET FROM THE TWO EDGE LINES BY 1.2 m EXCEPT AT THE FLARES ON EACH END. FLARE RATE IS 10:1.

2. ANY PAVEMENT MARKING IN CONFLICT WITH PROPOSED MARKINGS SHALL BE REMOVED BY CONTRACTOR OR AS DIRECTED BY THE ENGINEER.

STATE OF TEXAS
BRENT L. CHRISTIAN
73921
REGISTERED PROFESSIONAL ENGINEER

Brent L Christian
6/16/97

NO.	DATE	REVISION	APPROV.

Texas Department of Transportation
LOOP 1604

PAVEMENT MARKING AND DELINEATION LAYOUT
STA. 13+560 TO STA. 13+920
12 OF 14

Kimley-Horn and Associates, Inc.

Designed	REK	DIST	FED REG	FEDERAL AID PROJECT				HIGHWAY
Checked	BLC	15	6					LP1604
Drawn	PKG	COUNTY			CONTROL	SECT	JOB	SHEET
Checked	BLC	BEXAR			2452	01	035	358

H:\DRAWINGS\673160 3\PM604TPM12.DGN

LEVELS DISPLAYED
1 2 3 4 5 6 7 8 9 10 11 12 13 14 15 16
17 18 19 20 21 22 23 24 25 26 27 28 29 30 31 32
33 34 35 36 37 38 39 40 41 42 43 44 45 46 47 48
49 50 51 52 53 54 55 56 57 58 59 60 61 62 63

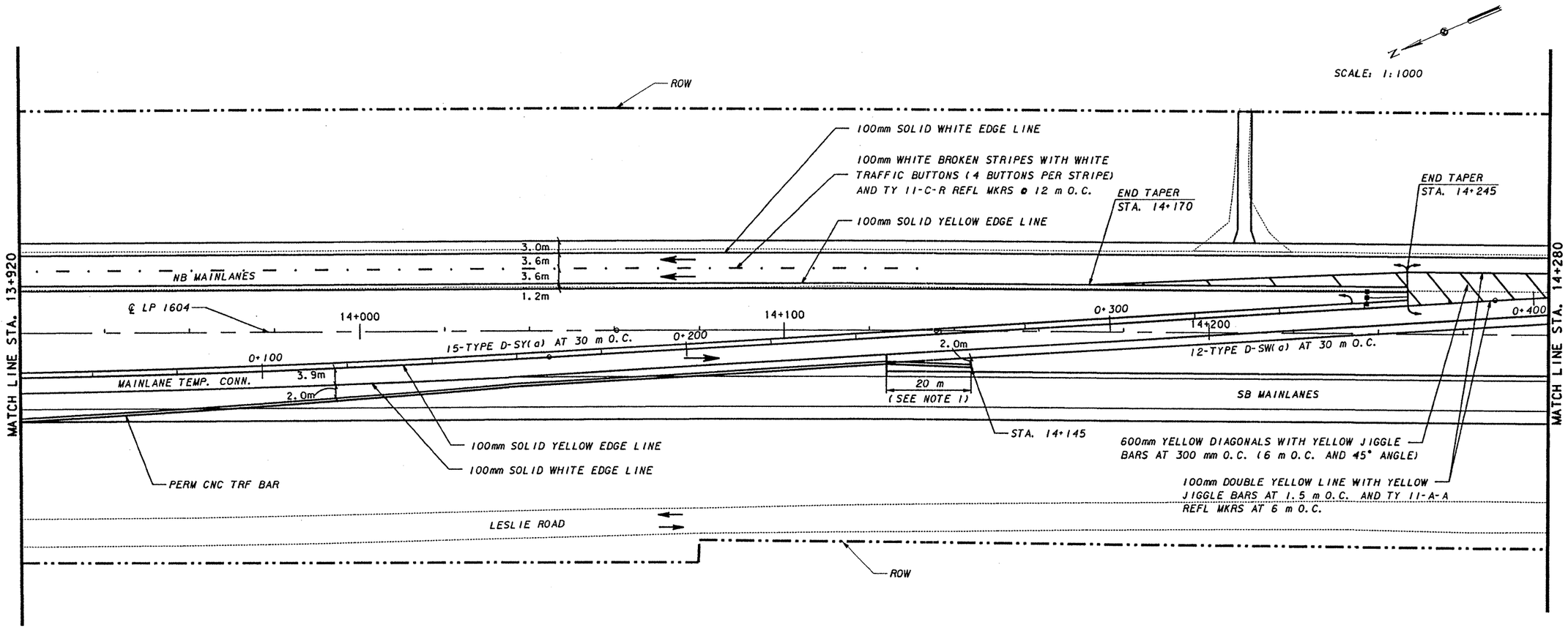

ESTIMATED QUANTITIES

ITEM NO.	DESC. CODE	DESCRIPTION	UNIT	QUANTITY
666	5001	REFL PAV MRK TY I (W) (SLD) (100 MM)	M	726
666	5002	REFL PAV MRK TY I (W) (BRK) (100 MM)	M	90
666	5006	REFL PAV MRK TY I (W) (SLD) (200 MM)	M	
666	5012	REFL PAV MRK TY I (W) (SLD) (600 MM)	M	
666	5013	REFL PAV MRK TY I (W) (ARROW)	EA	
666	5017	REFL PAV MRK TY I (W) (WORD)	EA	
666	5024	REFL PAV MRK TY I (Y) (SLD) (100 MM)	M	861
666	5029	REFL PAV MRK TY I (Y) (SLD) (200 MM)	M	
666	5032	REFL PAV MRK TY I (Y) (SLD) (600 MM)	M	70
672	5004	RAIS PAV MRKR CL A (JIGGLE) TY W	EA	
672	5005	RAIS PAV MRKR CL A (JIGGLE) TY Y	EA	214
672	5009	RAIS PAV MRKR CL B (REFL) TY II-A-A	EA	11
672	5010	RAIS PAV MRKR CL B (REFL) TY II-C-R	EA	30
672	5016	RAIS PAV MRKR CL C (TRAF BTN) TY W	EA	120
672	5017	RAIS PAV MRKR CL C (TRAF BTN) TY Y	EA	
677	5003	ELIM EXT PAV MRK & MRKR (200 MM)	M	
677	5006	ELIM EXT PAV MRK & MRKR (600MM)	M	
659	5001	REMOV DELIN & OBJECT MARKER ASSMS	EA	

(SEE SHEET 347 FOR LEGEND)

DELINEATION QUANTITIES

TYPE	EA	ASM	SPL MNT
D-SW (a)		12	
D-DW (a)			
D-SY (a)		15	
D-DY (a)			
OM-2SR (a)			
OM-2HP (a)		1	
OM-3L			
OM-3R			

NOTES

1. CTB IS PARALLEL WITH AND OFFSET FROM THE TWO EDGE LINES BY 1.2 m EXCEPT AT THE FLARES ON EACH END. FLARE RATE IS 10:1.
2. ANY PAVEMENT MARKING IN CONFLICT WITH PROPOSED MARKINGS SHALL BE REMOVED BY CONTRACTOR OR AS DIRECTED BY THE ENGINEER.

STATE OF TEXAS
BRENT L. CHRISTIAN
73921
REGISTERED PROFESSIONAL ENGINEER

Brent L. Christian
6/16/97

NO.	DATE	REVISION	APPROV.

Texas Department of Transportation
LOOP 1604

PAVEMENT MARKING AND DELINEATION LAYOUT
STA. 13+920 TO STA. 14+280
13 OF 14

Kimley-Horn and Associates, Inc.

Designed	REK	DIST	FED REG	FEDERAL AID PROJECT			HIGHWAY
Checked	BLC	15	6				LP1604
Drawn	PKG	COUNTY		CONTROL	SECT	JOB	SHEET
Checked	BLC	BEXAR		2452	01	035	359

LEVELS DISPLAYED

1	2	3	4	5	6	7	8	9	10	11	12	13	14	15	16
17	18	19	20	21	22	23	24	25	26	27	28	29	30	31	32
33	34	35	36	37	38	39	40	41	42	43	44	45	46	47	48
49	50	51	52	53	54	55	56	57	58	59	60	61	62	63	

H:\DRAWINGS\673160 3\PMK604TPM13.DGN

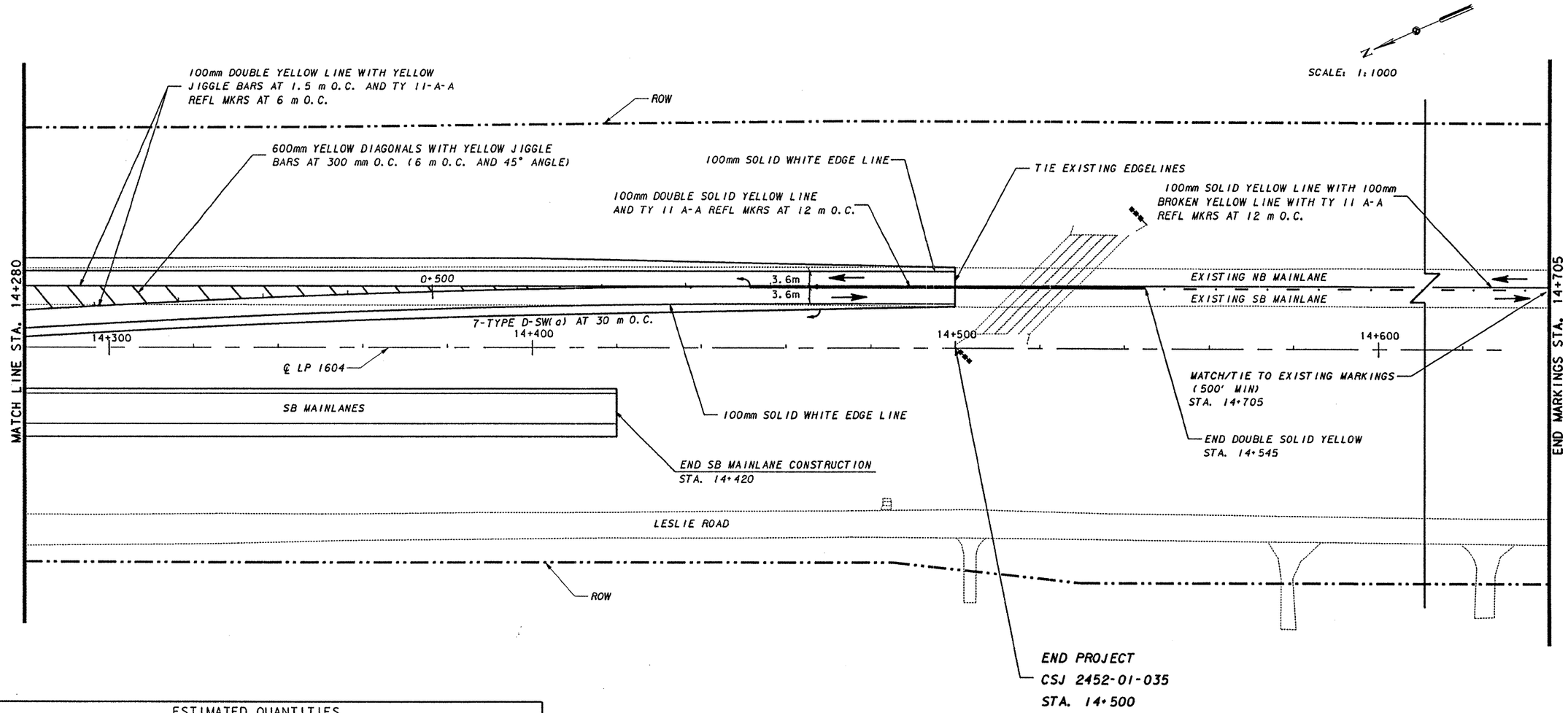

ESTIMATED QUANTITIES

ITEM NO.	DESC. CODE	DESCRIPTION	UNIT	QUANTITY
666	5001	REFL PAV MRK TY I (W) (SLD) (100 MM)	M	440
666	5002	REFL PAV MRK TY I (W) (BRK) (100 MM)	M	
666	5006	REFL PAV MRK TY I (W) (SLD) (200 MM)	M	
666	5012	REFL PAV MRK TY I (W) (SLD) (600 MM)	M	
666	5013	REFL PAV MRK TY I (W) (ARROW)	EA	
666	5017	REFL PAV MRK TY I (W) (WORD)	EA	
666	5024	REFL PAV MRK TY I (Y) (SLD) (100 MM)	M	812
666	5029	REFL PAV MRK TY I (Y) (SLD) (200 MM)	M	
666	5032	REFL PAV MRK TY I (Y) (SLD) (600 MM)	M	75
672	5004	RAIS PAV MRKR CL A (JIGGLE) TY W	EA	
672	5005	RAIS PAV MRKR CL A (JIGGLE) TY Y	EA	480
672	5009	RAIS PAV MRKR CL B (REFL) TY 11-A-A	EA	68
672	5010	RAIS PAV MRKR CL B (REFL) TY 11-C-R	EA	
672	5016	RAIS PAV MRKR CL C (TRAF BTN) TY W	EA	
672	5017	RAIS PAV MRKR CL C (TRAF BTN) TY Y	EA	
677	5003	ELIM EXT PAV MRK & MRKR (100 MM)	M	205
677	5006	ELIM EXT PAV MRK & MRKR (600 MM)	M	
659	5001	REMOV DELIN & OBJECT MARKER ASSMS	EA	14

(SEE SHEET 347 FOR LEGEND)

DELINEATION QUANTITIES

TYPE	EA	ASM	SPL MNT
D-SW (a)		7	
D-DW (a)			
D-SY (a)			
D-DY (a)			
OM-2SR (a)		2	
OM-2HP (a)			
OM-3L			
OM-3R			

NOTES

1. ANY PAVEMENT MARKING IN CONFLICT WITH PROPOSED MARKINGS SHALL BE REMOVED BY CONTRACTOR OR AS DIRECTED BY THE ENGINEER.

STATE OF TEXAS
BRENT L. CHRISTIAN
73921
REGISTERED PROFESSIONAL ENGINEER

Brent L. Christian
6/16/97

NO.	DATE	REVISION	APPROV.

Texas Department of Transportation
LOOP 1604

PAVEMENT MARKING
AND DELINEATION LAYOUT
STA. 14+280 TO STA. 14+705
14 OF 14

Kimley-Horn and Associates, Inc.

Designed	REK	DIST	FED REG	FEDERAL AID PROJECT				HIGHWAY
Checked	BLC	15	6					LP1604
Drawn	PKG	COUNTY			CONTROL	SECT	JOB	SHEET
Checked	BLC	BEXAR			2452	01	035	360

LEVELS DISPLAYED
1 2 3 4 5 6 7 8 9 10 11 12 13 14 15 16
17 18 19 20 21 22 23 24 25 26 27 28 29 30 31 32
33 34 35 36 37 38 39 40 41 42 43 44 45 46 47 48
49 50 51 52 53 54 55 56 57 58 59 60 61 62 63

H:\DRAWINGS\67316031\PM604TPM14.DGN

NOTE: CLASS "B" CONCRETE RIPRAP TO BE PLACED AS SHOWN IN DETAILS AND APPROVED BY THE ENGINEER. THIS WORK SHALL BE DONE IN ACCORDANCE WITH ITEM 432.

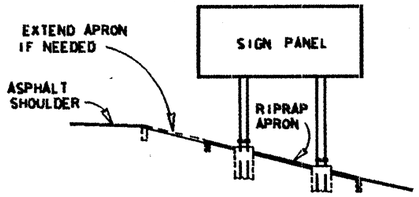

TYPICAL ELEVATION
MULTIPLE POST

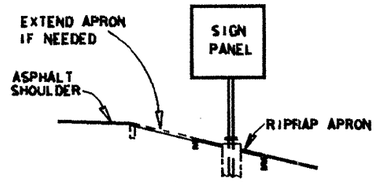

TYPICAL ELEVATION
SINGLE POST

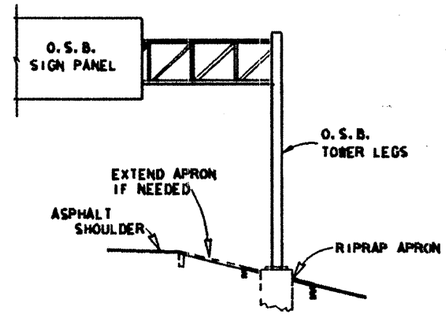

TYPICAL ELEVATION
OVERHEAD SIGN BRIDGE

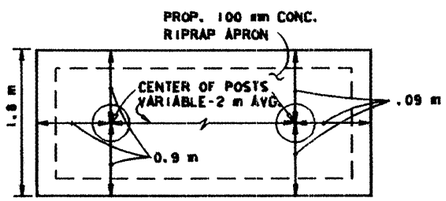

TOP VIEW

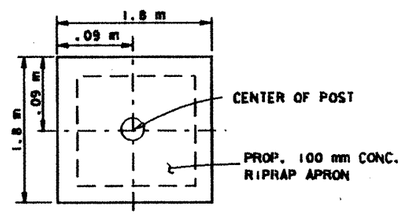

TOP VIEW

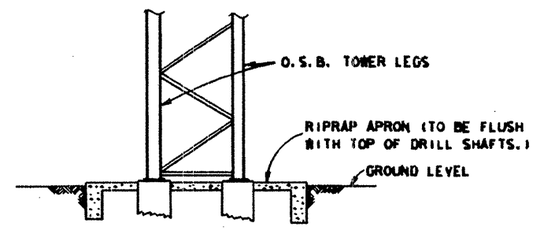

SIDE VIEW ELEVATION

OVERHEAD SIGN BRIDGE
ESTIMATED AT 1.5 M PER SITE

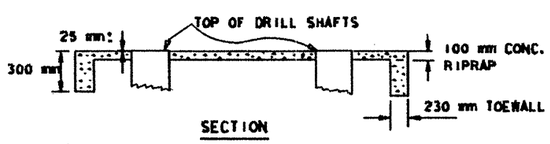

SECTION

MULTIPLE POST GROUND MOUNT
ESTIMATED AT 1.5 M3 PER SITE

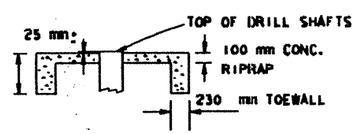

SECTION

SINGLE POST GROUND MOUNT
ESTIMATED AT 1 M3 PER SITE

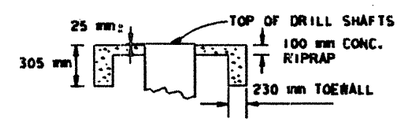

SECTION

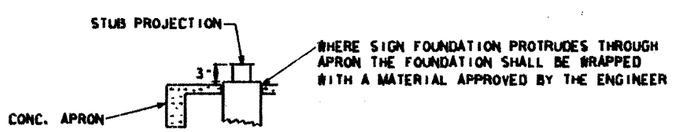

SECTION DETAIL

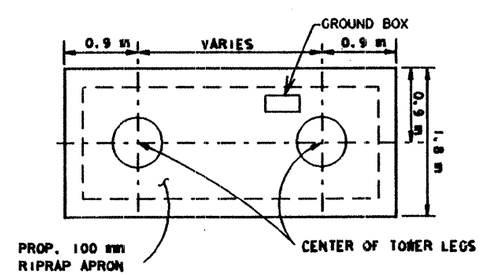

TOP VIEW

RIPRAP APRON DETAILS FOR SIGN FOUNDATIONS

RAD
(SAN ANTONIO DISTRICT STANDARD)
METRIC

REVISED 2-96

FED. RD. DIV. NO.	FEDERAL AID PROJECT NO.		SHEET NO.
6	CD-2452-01.035		361
STATE	STATE DIST. NO.	COUNTY	
TEXAS	SAT	BEXAR	
CONT.	SECT.	JOB	HIGHWAY NO.
2452	01	035	LP 1604

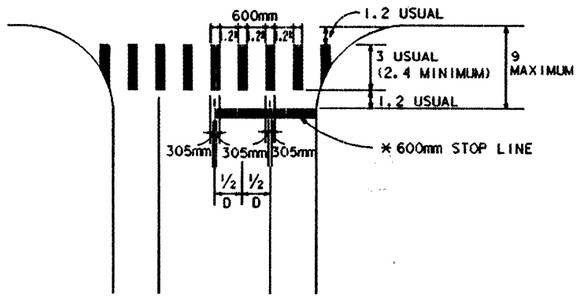

TWO LANES WITH SHOULDERS

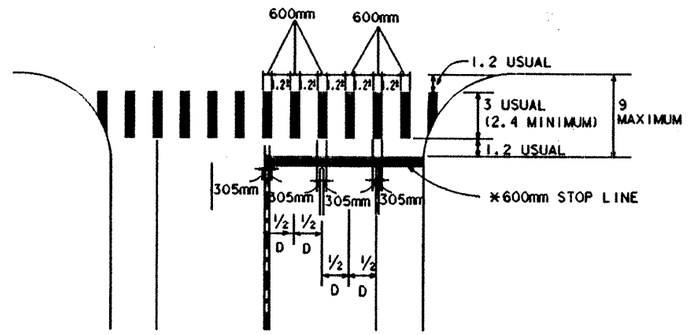

FOUR LANES WITH SHOULDERS

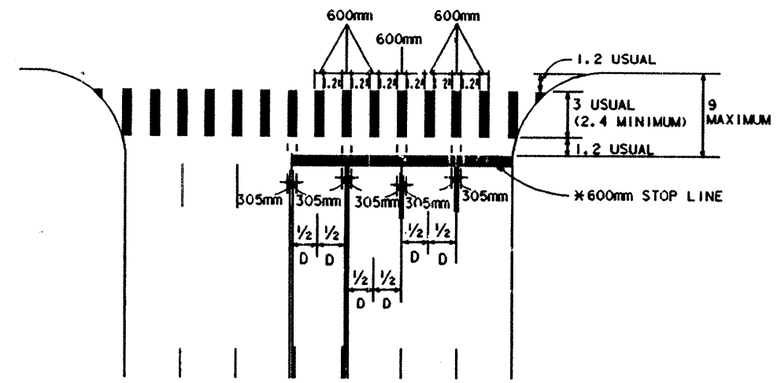

MULTI - LANES

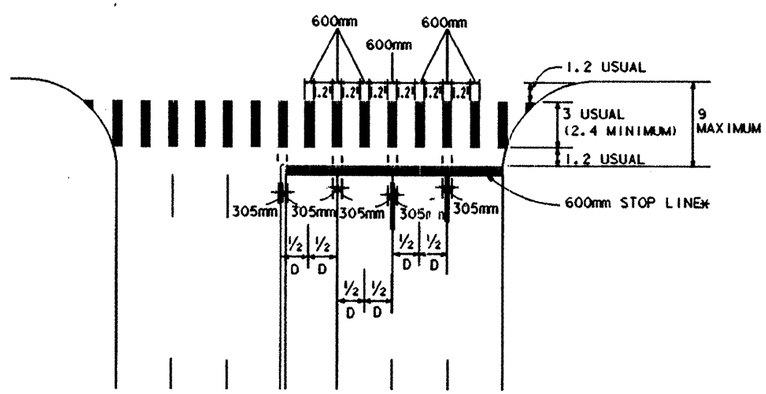

MULTI - LANE WITH MEDIAN

NOTES:

1. ALL LONGITUDINAL LINES FORMING CROSSWALK AND STOP LINES SHALL BE WHITE
*2. STOP LINES AS REQUIRED ON DETAILED PAVEMENT MARKING PLANS.
3. "D" IS EQUAL TO ONE HALF THE DISTANCE.

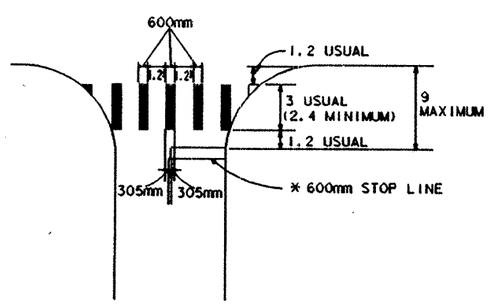

TWO LANES

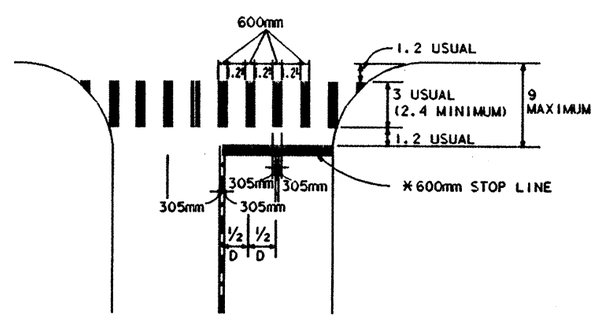

FOUR LANES

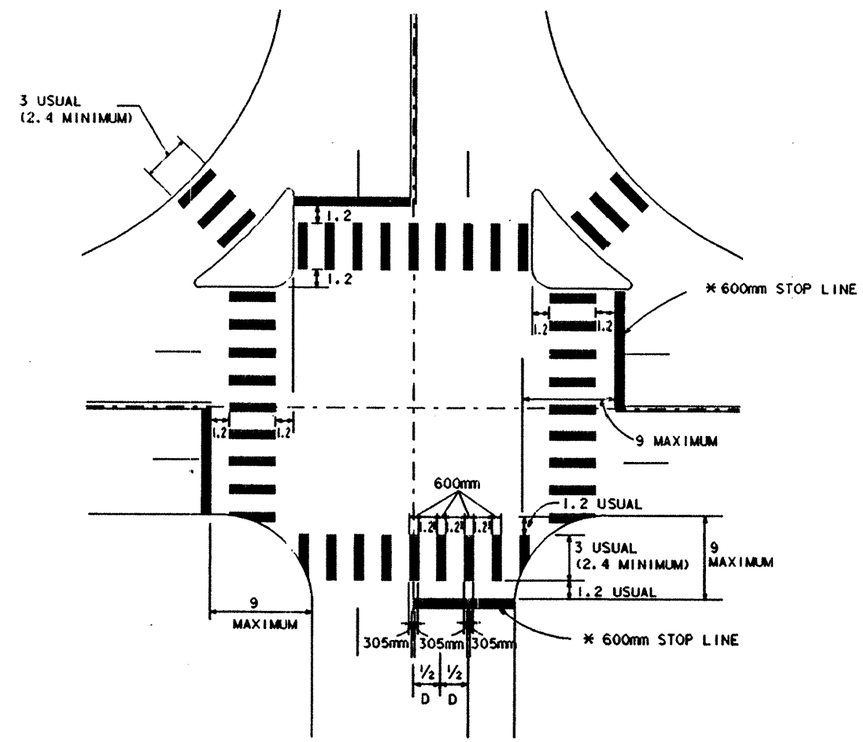

INTERSECTION WITH RIGHT - TURN ISLANDS

TYPICAL CROSSWALK DETAILS (M)

DISTRICT STANDARD

All dimensions are in meters unless otherwise noted

REV. MAR 19, 1996
FEB 15, 1994

FED.RD. DIV.NO.	FEDERAL AID PROJECT NO.		SHEET NO.
6	CD2452-01-035		362
STATE	STATE L. ST. NO.	COUNTY	
TEXAS	SAT.	BEXAR	
CONT.	SECT.	JOB	HIGHWAY NO.
2452	01	035	LP1604

PLAN

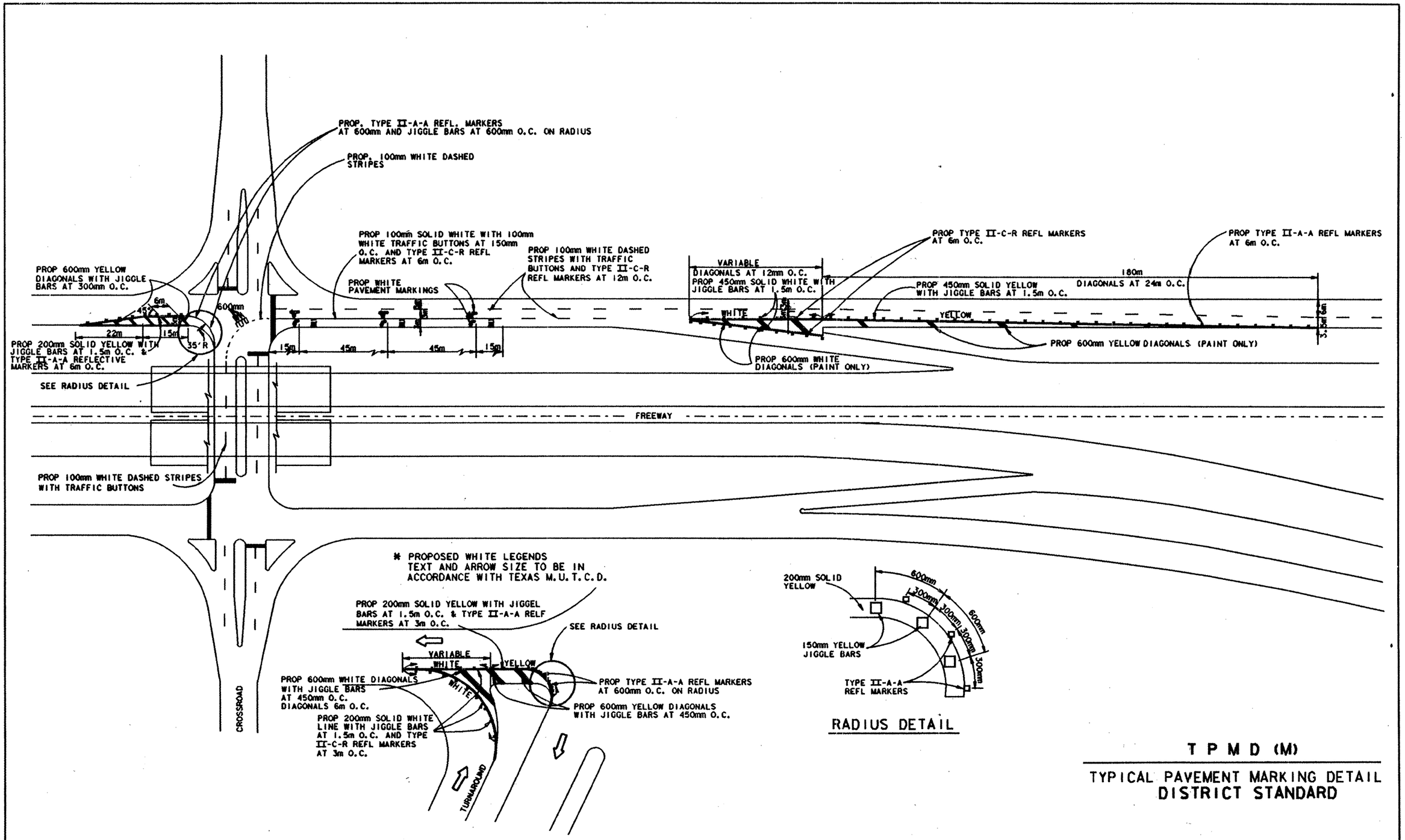

TYPICAL TURNAROUND PAVEMENT MARKING DETAIL

RADIUS DETAIL

T P M D (M)

TYPICAL PAVEMENT MARKING DETAIL
DISTRICT STANDARD

REV. 3-96

FED. RD. DIV. NO.	FEDERAL AID PROJECT NO.		SHEET NO.
6	CD2452.01.035		363
STATE	STATE DIST. NO.	COUNTY	
TEXAS	BAT	BEXAR	
	SECT.	JOB	HIGHWAY NO.
2452	01	035	LP 1604

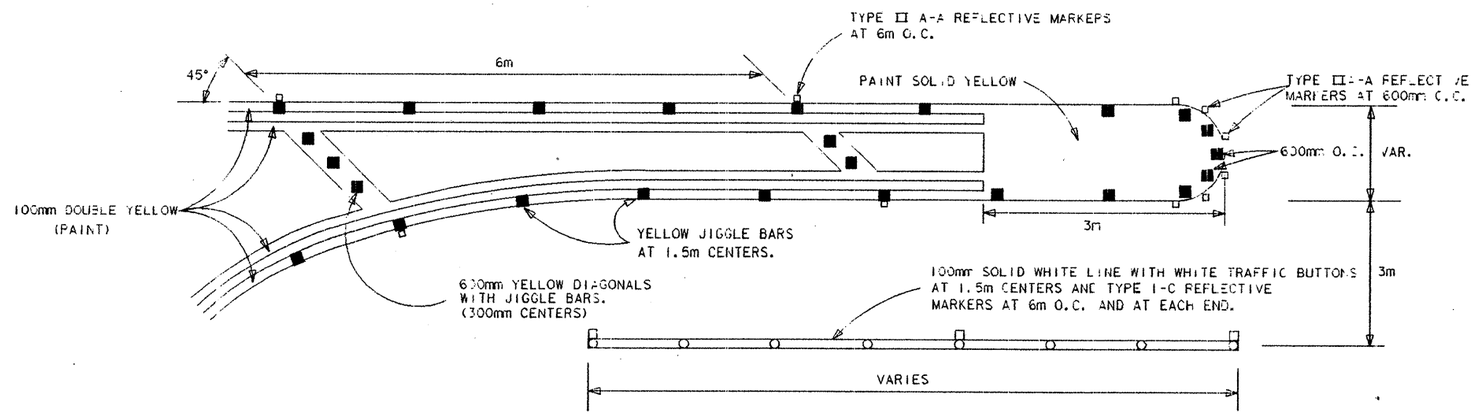

LEGEND

- ■ 150mm YELLOW JIGGLE BAR
- ▫ REFLECTIVE MARKER
- ○ 100mm TRAFFIC BUTTON (WHITE)

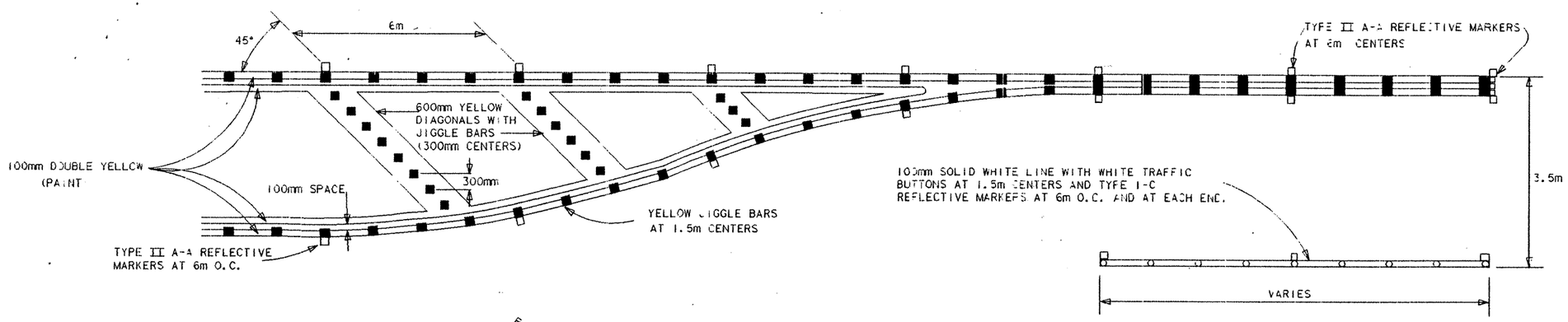

MEDIAN LEFT TURN BAY DETAILS

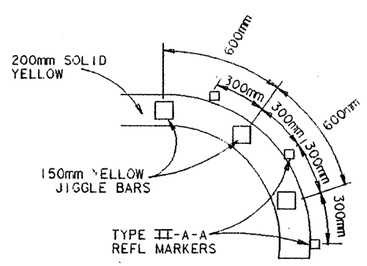

RADIUS DETAIL

MLTBL (M)

MEDIAN LEFT TURN BAY DETAILS
(SAN ANTONIO DISTRICT)

SHEET 2 OF 2

FED. RD. DIV. NO.	FEDERAL AID PROJECT NO.		SHEET NO.
6	CD 2452-01-035		304
STATE	STATE L. ST. NO.	COUNTY	
TEXAS	15	BEXAR	
CONT.	SECT.	JOB	HIGHWAY NO.
2452	01	035	LP1604

REV. 3-20-96

TRMD DGN (TRAFFIC OPERATIONS)

DISCLAIMER
The use of this standard is governed by the "Texas Engineering Practice Act". No warranty of any kind is made by TxDOT for any purpose whatsoever. TxDOT assumes no responsibility for the conversion of this standard to other formats or for incorrect results or damages resulting from its use.

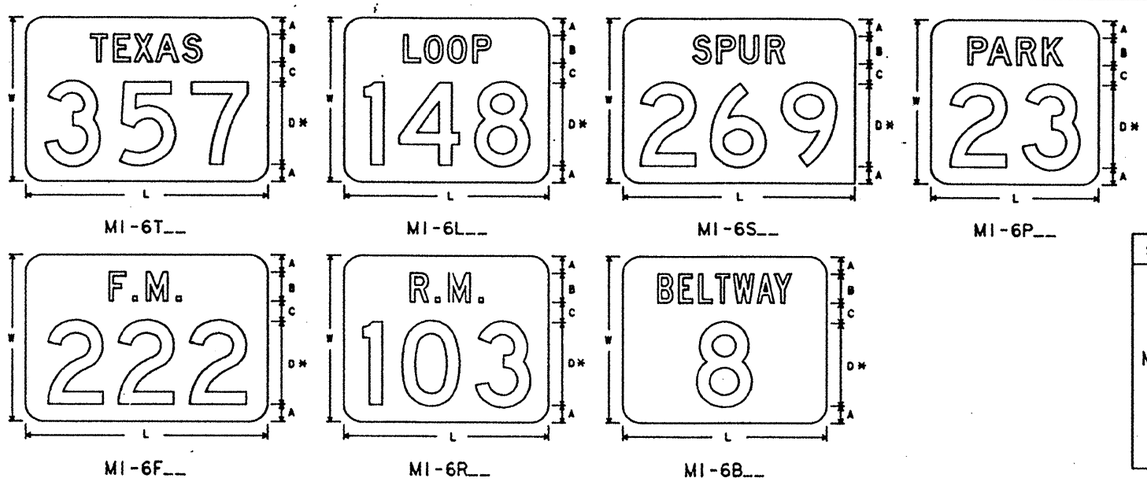

* IN A FEW CASES NUMERALS CANNOT BE ACCOMMODATED WITHIN THE SPACE AVAILABLE. FOR THESE CASES, THE STANDARD SERIES D MAY BE REDUCED TO SERIES C, OR AS A SECOND CHOICE REDUCED TO THE NEXT SMALLER HEIGHT COMMONLY AVAILABLE.

SIGN TYPES		NO. OF DIGITS	W	A	B	C	D
MI-6 T L S P F R B	4A	4	610	64	102	76	305
	3A	3					
	2A	2					
	1A	1					
	4B	4	914	102	152	102	457
	3B	3					
	2B	2					
	1B	1					
	4C	4	1219	127	203	152	610
	3C	3					
	2C	2					
	1C	1					

RADIUS FOR CORNERS IS 76 MILLIMETERS TYPICAL
L: VARIABLE WITH THE NUMBER OF DIGITS; HOWEVER, TOTAL MARKER LENGTH SHALL BE ADJUSTED TO NEAREST 25 MILLIMETER MULTIPLE.

Letters - Black
Numerals - Black
Background - White Reflective

MI-6 STATE ROUTE MARKERS FOR GUIDE SIGN USE

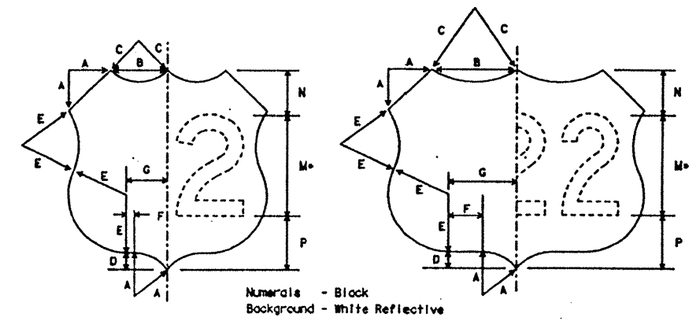

Numerals - Black
Background - White Reflective

		SIZE	A	B	C	D	E	F	G	M*	N	P	AREA
MI-4D2	305 NUMERALS 2 DIGIT	610x610	127	178	127	51	178	25	127	305D	140	165	0.3
MI-4D3	305 NUMERALS 3 DIGIT	762x610	127	254	229	51	178	102	203	305D	140	165	0.38
MI-4E2	457 NUMERALS 2 DIGIT	914x914	191	267	191	76	267	38	191	457D	210	248	0.66
MI-4E3	457 NUMERALS 3 DIGIT	1143x914	191	381	343	76	267	152	305	457D	210	248	0.85
MI-4F2	610 NUMERALS 2 DIGIT	1219x1219	254	356	254	102	356	51	254	610D	279	330	1.18
MI-4F3	610 NUMERALS 3 DIGIT	1524x1219	254	508	457	102	356	203	406	610D	279	330	1.5

NOTES:
ALL LENGTHS SHOWN ARE IN MILLIMETERS, ALL AREAS ARE IN SQUARE METERS.

1. DIMENSIONS FOR THE U.S. ROUTE MARKER OUTLINES ARE SCALE DIMENSIONS AND MAY BE ADJUSTED SLIGHTLY WHERE NECESSARY FOR CLOSURE OF THE OUTLINES.
2. * IN A FEW CASES NUMERALS CANNOT BE ACCOMMODATED WITHIN THE SPACE AVAILABLE. FOR THESE CASES, THE STANDARD SERIES D MAY BE REDUCED TO SERIES C, OR AS A SECOND CHOICE REDUCE TO THE NEXT SMALLER HEIGHT COMMONLY AVAILABLE.

U.S. ROUTE MARKERS FOR GUIDE SIGN USE

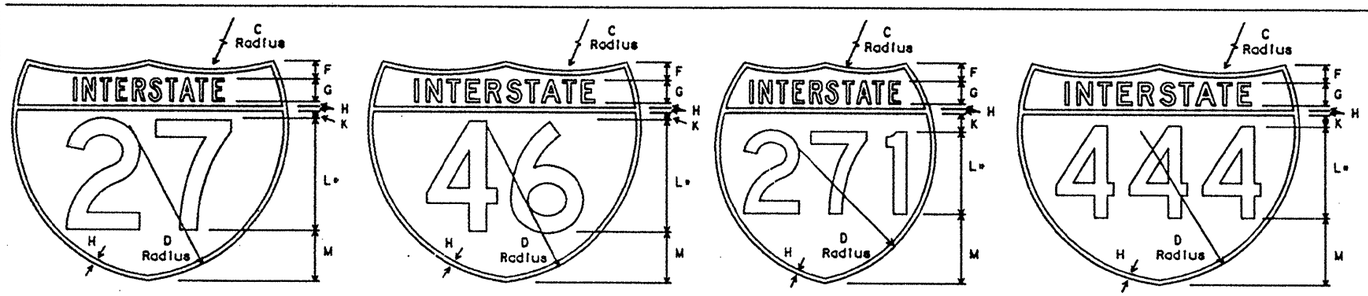

MI-1C2
1143x914

Letters - White Reflective
Numerals - White Reflective
Border - White Reflective
Background (Upper Portion) - Red Reflective
Background (Lower Portion) - Blue Reflective

MI-1D2
1524x1219

Letters - White Reflective
Numerals - White Reflective
Border - White Reflective
Background (Upper Portion) - Red Reflective
Background (Lower Portion) - Blue Reflective

MI-1C3
1219x1219

Letters - White Reflective
Numerals - White Reflective
Border - White Reflective
Background (Upper Portion) - Red Reflective
Background (Lower Portion) - Blue Reflective

MI-1D3
1524x1219

Letters - White Reflective
Numerals - White Reflective
Border - White Reflective
Background (Upper Portion) - Red Reflective
Background (Lower Portion) - Blue Reflective

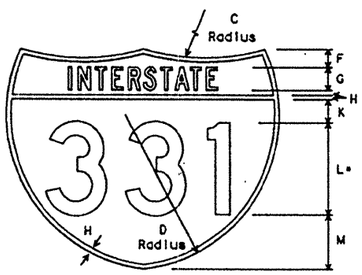

MI-1C3-S
1143x914

Letters - White Reflective
Numerals - White Reflective
Border - White Reflective
Background (Upper Portion) - Red Reflective
Background (Lower Portion) - Blue Reflective

			SIZE	C	D	F	G	H	K	L*	M	N	AREA
INTERSTATE	MI-1C2	457 NUMERALS 2 DIGIT	1143x914	914	648	76	95C	19	38	457D	210	-	0.87
	MI-1D2	610 NUMERALS 2 DIGIT	1524x1219	1219	864	102	127D	25	51	610D	279	-	1.56
	MI-1C3-S	381 NUMERALS 3 DIGIT	1143x914	914	648	76	95C	19	95	381D	229	-	0.87 △
	MI-1C3	457 NUMERALS 3 DIGIT	1219x1219	762	762	102	127C	25	102	457D	381	-	1.18
	MI-1D3	508 NUMERALS 3 DIGIT	1524x1219	1219	864	102	127D	25	64	508D	368	-	1.56
BUSINESS SPUR LOOP	MI-2C2	381 NUMERALS 2 DIGIT	914x914	572	572	76	95C	19	19	381D	229	57D	0.67
	MI-2D2	508 NUMERALS 2 DIGIT	1219x1219	762	762	102	127C	25	25	508D	305	76D	1.18
	MI-3C2	381 NUMERALS 2 DIGIT	914x914	572	572	76	95C	19	19	381D	229	57D	0.67
	MI-3D2	508 NUMERALS 2 DIGIT	1219x1219	762	762	102	127C	25	25	508D	305	76D	1.18

ALL LENGTHS SHOWN ARE IN MILLIMETERS, ALL AREAS ARE IN SQUARE METERS.

△ MI-1C3-S IS FOR USE ON SEQUENCE SIGNS ONLY.

* IN A FEW CASES NUMERALS CANNOT BE ACCOMMODATED WITHIN THE SPACE AVAILABLE. FOR THESE CASES, THE STANDARD SERIES D MAY BE REDUCED TO SERIES C, OR AS A SECOND CHOICE REDUCED TO THE NEXT SMALLER HEIGHT COMMONLY AVAILABLE.

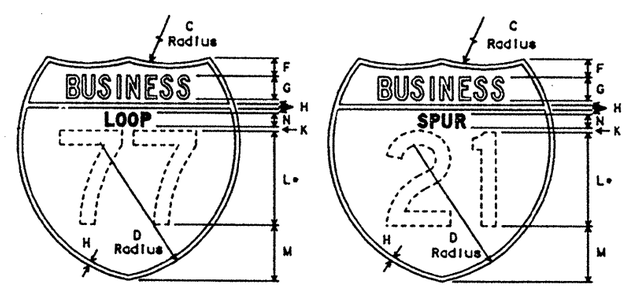

MI-2C2
914x914

MI-2D2
1219x1219

Letters - White Reflective
Numerals - White Reflective
Border - White Reflective
Background - Green Reflective

MI-3C2
914x914

MI-3D2
1219x1219

Letters - White Reflective
Numerals - White Reflective
Border - White Reflective
Background - Green Reflective

INTERSTATE ROUTE MARKERS FOR GUIDE SIGN USE

SPECIFICATION REFERENCE TABLE

MATERIALS AND TESTS DIVISION SPECIFICATIONS	
ALUMINUM SIGN BLANKS	D-9-7110
REFLECTIVE SHEETING, TYPE C (HIGH SPECIFIC INTENSITY)	D-9-8300
VINYL NON-REFLECTIVE DECAL SHEETING	D-9-8320

GENERAL NOTES:

The Alphabets and lateral spacing between letters and numerals shall conform with the Texas "Manual on Uniform Traffic Control Devices for Streets and Highways", latest edition, and any approved changes thereto. Lateral spacing of text shall provide a balanced appearance. All materials shall conform to Department Specifications.

Legend for State route markers shall be black and applied by screening process, cut-out vinyl non-reflective decal sheeting or combination thereof. Legend for U.S. route markers shall be applied by reverse screening process, cut-out black vinyl non-reflective decal sheeting or combination thereof. Legend for Interstate route markers shall be applied by reverse screening process with transparent colored ink, cut-out white reflective sheeting applied to colored background or combination thereof. Background shall be reflective sheeting (Type C).

Sign blanks shall be one piece 1.6 mm thick sheet aluminum alloy (Type A), unless otherwise noted elsewhere in the plans.

Route Markers shall be attached to guide signs as detailed on Standard Plan Sheet IM(2)(M).

All dimensions are in millimeters unless otherwise noted.

The metric dimensions shown on this sheet have been rounded, and should be considered equivalent to the English dimensions in the "1980 Standard Highway Sign Designs for Texas" manual.

STANDARD PLANS
TEXAS DEPARTMENT OF TRANSPORTATION
Traffic Operations Division

INTERSTATE, U.S. & STATE ROUTE MARKERS FOR ATTACHMENT TO GUIDE SIGNS

IM(I)-95(M)

CHKD DRAWN DATE: JULY 1972	DN: LR	CK:	DW: DN	CK:	HGW BRG.:	
REVISIONS 1-85 8-95 7-90 9-93 12-94	STATE DISTRICT 15	FEDERAL REGION 6	FEDERAL AID PROJECT CR2452-1-35			SHEET 265
	COUNTY BEXAR		CONTROL 2452	SECTION 01	JOB 035	HIGHWAY LP1604

Metric 3A

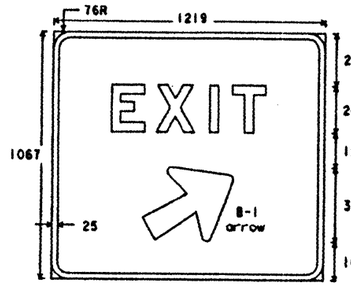

E5-1a
1219x1067

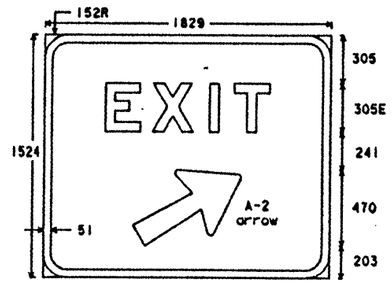

E5-1
1829x1524

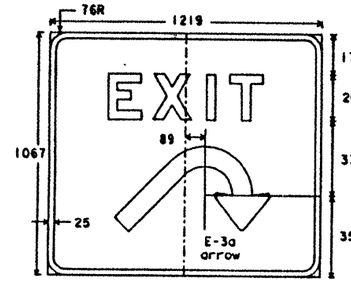

E5-3a
1219x1067

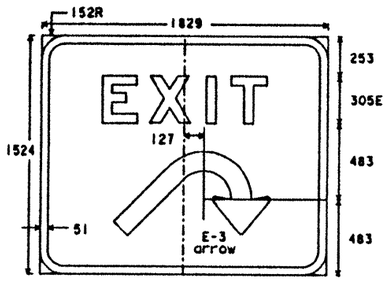

E5-3
1829x1524

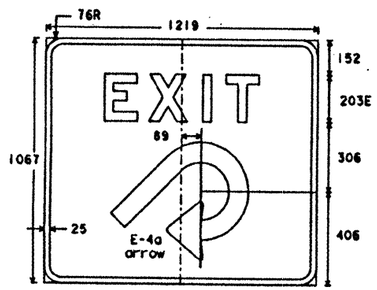

E5-4a
1219x1067

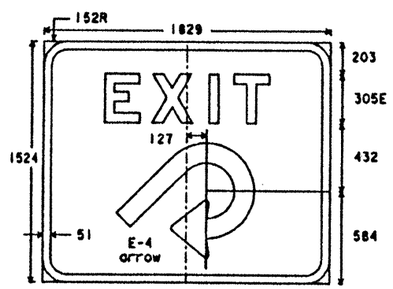

E5-4
1829x1524

Legend - White Reflective
Border - White Reflective
Background - Green Reflective

EXIT GORE SIGNS

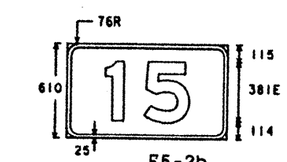

1 & 2 Digit

E5-2b
1067x610

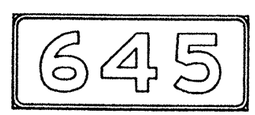

E5-2c
1524x610

3 Digit

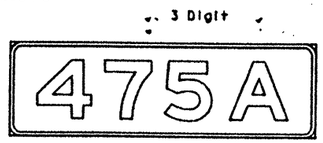

E5-2d
1981x610

4 Digit

Legend - White Reflective
Border - White Reflective
Background - Green Reflective

EXIT SIGN NUMBER PANELS

MILEPOST MARKER

Legend - White Reflective
Border - White Reflective
Background - Green Reflective

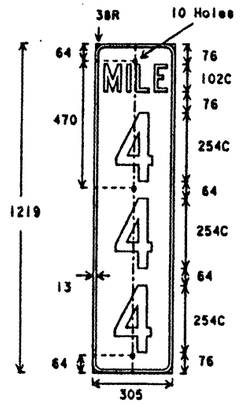

D10-6
305x1219

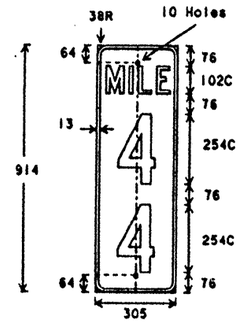

D10-5
305x914

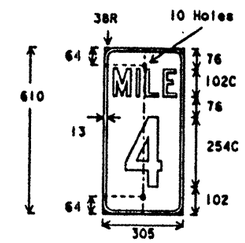

D10-4
305x610

TYPE MW (WINGED CHANNEL)

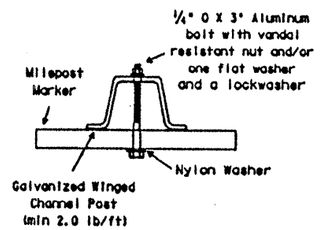

TYPE MP (POST)

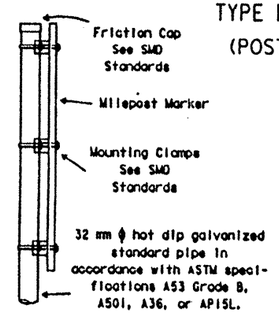

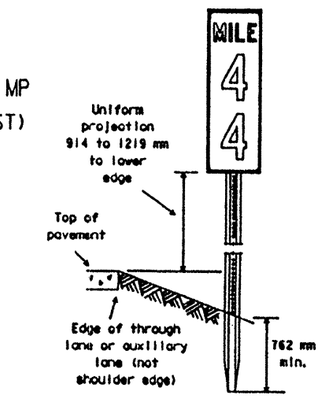

EXIT GORE SIGN TYPICAL ASSEMBLY

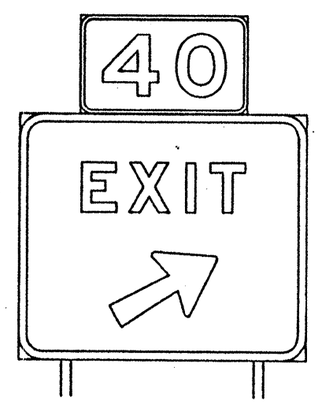

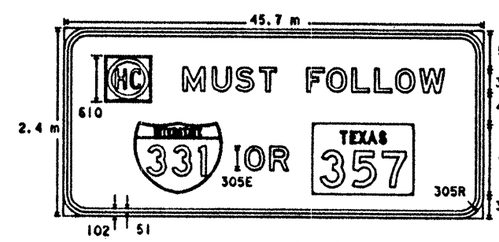

R14-6
45.7x2.4 m (min.)

Legend - Black
Border - Black
Background - White Reflective
Shields - See R, IE and IM Standards for details

SPECIFICATION REFERANCE TABLE	
MATERIALS AND TESTS DIVISION SPECIFICATIONS	
PLYWOOD SIGN BLANKS	D-9-7100
ALUMINUM SIGN BLANKS	D-9-7110
REFLECTIVE SHEETING, TYPE A (ENGINEER GRADE)	D-9-8300
REFLECTIVE SHEETING, TYPE C (HIGH SPECIFIC ITENSITY)	D-9-8300
VINYL NON-REFLECTIVE DECAL SHEETING	D-9-8320

COLOR	USAGE	REFLECTIVE SHEETING OR OTHER MATERIAL
BLUE	BACKGROUND	TYPE C (HIGH SPECIFIC INTENSITY)
BROWN	BACKGROUND	TYPE C (HIGH SPECIFIC INTENSITY)
GREEN	BACKGROUND	TYPE C (HIGH SPECIFIC INTENSITY)
ORANGE	BACKGROUND	TYPE C (HIGH SPECIFIC INTENSITY)
WHITE	BACKGROUND	TYPE A (ENGINEER GRADE)
YELLOW	BACKGROUND	TYPE C (HIGH SPECIFIC INTENSITY)
BLACK	LEGEND & BORDERS	VINYL NON-REFLECTIVE DECAL SHEETING
WHITE	LEGEND & BORDERS	TYPE C (HIGH SPECIFIC INTENSITY)

GENERAL NOTES:

The alphabets and lateral spacing between letters and numerals shall conform with the Texas 'Manual on Uniform Traffic Control Devices for Streets and Highways', latest edition, and any approved changes thereto. Lateral spacing of text shall provide a balanced appearance. All materials shall conform to Department Specifications.

Legend (except for sign R14-6), shall be applied by reverse screening process with transparent colored ink, cut-out white reflective sheeting applied to colored background or combination thereof. Background shall be reflective sheeting (Type C).

Sign blanks for roadside mounted guide signs shall be 16 mm thick plywood (Type A), unless otherwise noted elsewhere in the plans. Dimensions shown for borders and corner radii are nominal. Borders may vary in width as much as 13 mm. Corner radii above 76 mm may vary in radius plus or minus 25 mm. Borders and corner radii must be of matching widths. The sign area outside the corner radius need not be trimmed or rounded. Panels attached above or below a parent sign shall be made of the same material as the parent sign. D10 Milepost Markers shall be one piece 2.0 mm thick sheet aluminum alloy (Type A).

Mounting details for roadside mounted guide signs are shown on Standard Plan Sheets SMD series, mounting details for over head signs shall be as detailed elsewhere in the plans or the supplier's choice subject to approval by the Engineer.

Individual panel sizes may be adjusted during plan preparation to fit actual parnet sign sizes where necessary. Panel sizes to be' furnished should be as detailed elsewhere in the plans and/or as shown on sign tabulation sheet. See Standard Plan Sheet IM series for arrow details.

R14-6 HAZARDOUS CARGO ROUTING SIGN

Legend of parent sign shall be black cut-out vinyl non-reflective decal sheeting. Background shall be white reflective sheeting (Type A). Shield details are shown on Standard Plan Sheets R and IM series.

Parent sign blank shall be 16 mm thick plywood (Type A). Shields shall be one piece 1.6 mm thick sheet aluminum alloy (Type A).

Attachment of shields to parent sign is as detailed on Standard Plan Sheet IM(2).

All dimensions are in millimeters unless otherwise noted.

The metric dimensions shown on this sheet have been rounded, and should be considered equivalent to the English dimensions in the '1980 Standard Highway Sign Designs for Texas' manual.

STANDARD PLANS
TEXAS DEPARTMENT OF TRANSPORTATION
Traffic Operations Division

EXIT GORE AND MILEPOST SIGNS

IE(1)-95(M)

FILE: d58hpl c/usr/d580504	DN: DN	CK: CW	DW: LR	CK: DN	CK: MT
9-93					
8-95					

STATE	DISTRICT	FEDERAL AID PROJECT	SHEET
15	6	C152452-1-35	36b
COUNTY			
BEXAR			

DISCLAIMER
The use of this standard is governed by the "Texas Engineering Practice Act". No warranty of any kind is made by TxDOT for any purpose whatsoever. TxDOT assumes no responsibility for the conversion of this standard to other formats or for incorrect results or damages resulting from its use.

OVERHEAD GUIDE SIGN ROUTING PLAQUES

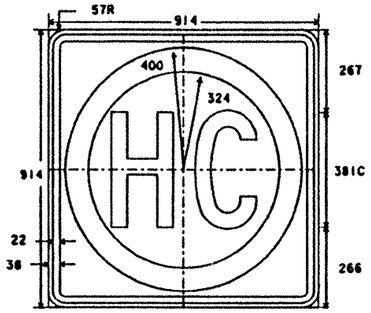

ER14-2
914x914

Letters - Black
Border - Black
Ring - Green Reflective
Background - White Reflective

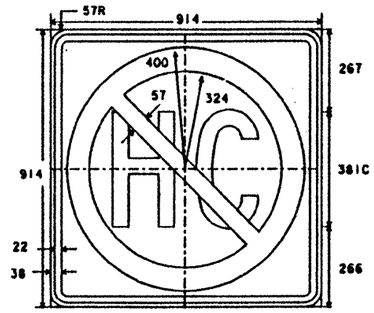

ER14-3
914x914

Letters - Black
Border - Black
Ring/Slash - Red Reflective
Background - White Reflective

OPTIONAL NAME PLAQUE

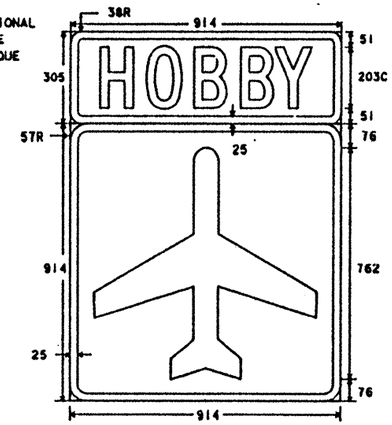

FI-5
914x914

Symbol - White Reflective
Border - White Reflective
Background - Green Reflective

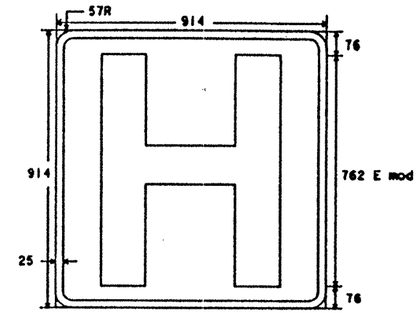

FD9-2
914x914

Symbol - White Reflective
Border - White Reflective
Background - Blue Reflective

OVERHEAD GUIDE SIGN TYPICAL ASSEMBLY

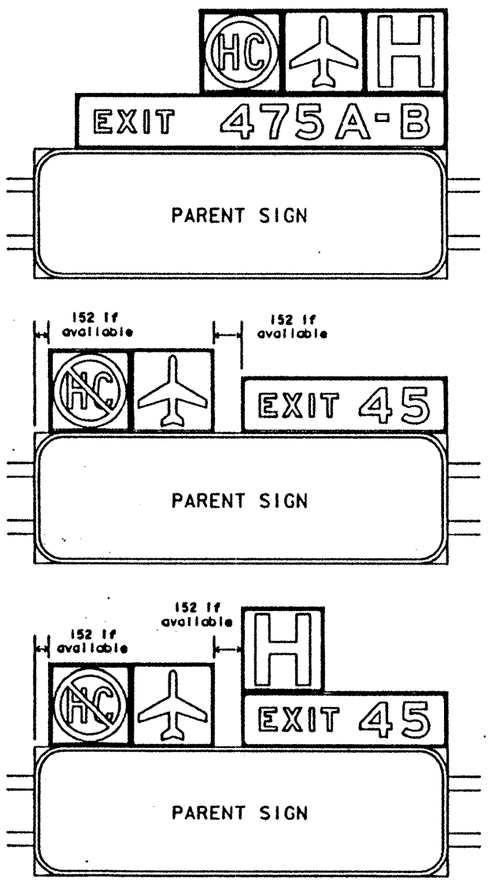

All dimensions are in millimeters unless otherwise noted.

The metric dimensions shown on this sheet have been rounded, and should be considered equivalent to the English dimensions in the "1980 Standard Highway Sign Designs for Texas" manual.

GUIDE SIGN NUMBER PANELS

STANDARD

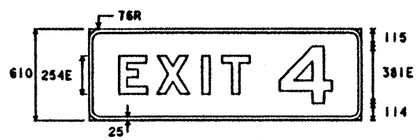

1 Digit

EI-5a
1829x610

2 Digit

EI-5b
2286x610

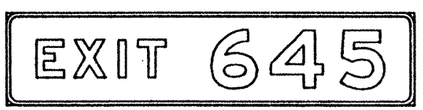

3 Digit

EI-5c
2743x610

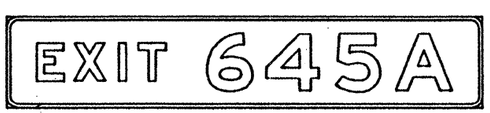

4 Digit

EI-5d
3200x610

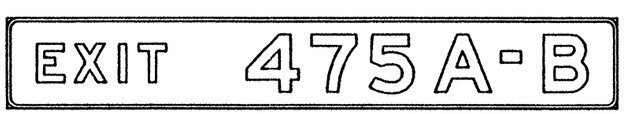

5 Digit

Legend - White Reflective
Border - White Reflective
Background - Same Color as Parent Sign
See details elsewhere in plans.

EI-5e
4191x610

ALTERNATE *

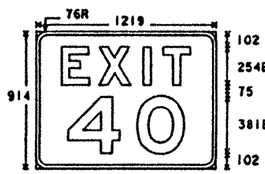

EI-5a-alt
1219x914

* Alternate design to be used only when Standard Guide Sign Number Panel width exceeds parent Sign width.

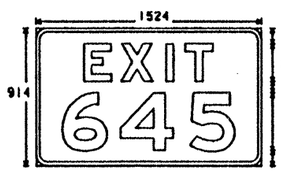

EI-5c-alt
1524x914

EI-5d-alt
2134x914

EI-5e-alt
2591x914

SPECIFICATION REFERENCE TABLE
MATERIALS AND TESTS DIVISION SPECIFICATIONS

PLYWOOD SIGN BLANKS	D-9-7100
ALUMINUM SIGN BLANKS	D-9-7110
REFLECTIVE SHEETING, TYPE C (HIGH SPECIFIC ITENSITY)	D-9-8300
VINYL NON-REFLECTIVE DECAL SHEETING	D-9-8320

COLOR	USAGE	REFLECTIVE SHEETING OR OTHER MATERIAL
BLUE	BACKGROUND	TYPE C (HIGH SPECIFIC INTENSITY)
GREEN	BACKGROUND	TYPE C (HIGH SPECIFIC INTENSITY)
WHITE	BACKGROUND	TYPE C (HIGH SPECIFIC INTENSITY)
BLACK	LEGEND & BORDERS	VINYL NON-REFLECTIVE DECAL SHEETING
WHITE	LEGEND & BORDERS	TYPE C (HIGH SPECIFIC INTENSITY)

GENERAL NOTES:

The alphabets and lateral spacing between letters and numerals shall conform with the Texas "Manual on Uniform Traffic Control Devices for Streets and Highways", latest edition, and any approved changes thereto. Lateral spacing of text shall provide a balanced appearance. All materials shall conform to Department Specifications.

Legend for guide sign number panels shall be applied by reverse screening process with transparent colored ink, cut-out white reflective sheeting applied to colored background or combination thereof. Background shall be reflective sheeting (Type C).

Sign blanks for roadside mounted guide signs shall be 16 mm thick plywood (Type A), unless otherwise noted elsewhere in the plans. Dimensions shown for borders and corner radii are nominal. Borders may vary in width as much as 13 mm. Corner radii above 76 mm may vary in radius plus or minus 25 mm. Borders and corner radii must be of matching widths. The sign area outside the corner radius need not be trimmed or rounded. Panels attached above or below a parent sign shall be made of the same material as the parent sign.

Mounting details for roadside mounted guide signs are shown on Standard Plan Sheets SMD series, mounting details for over head signs shall be as detailed elsewhere in the plans or the supplier's choice subject to approval by the Engineer.

Individual panel sizes may be adjusted during plan preparation to fit actual parnet sign sizes where necessary. Panel sizes to be furnished should be as detailed elsewhere in the plans and/or as shown on sign tabulation sheet.

GUIDE SIGN ROUTING PLAQUES

Legend for ER14-2 and ER14-3 shall be applied by screening process of black and/or transparent colored ink, cut-out vinyl non-reflective decal sheeting and/or reflective sheeting or combination thereof. Legend for FI-5, FD9-2 and optional name plaque shall be applied by reverse screening process with transparent colored ink, cut-out white reflective sheeting applied to colored background or combination thereof. Background shall be reflective sheeting (Type C).

Sign blanks shall be one piece 2.5 mm thick sheet aluminum alloy (Type A).

The priority of overhead Guide Sign Routing Plaques shall be (left to right) Hazardous Cargo, Airport then Hospital.

DISCLAIMER
The use of this standard is governed by the "Texas Engineering Practice Act". No warranty of any kind is made by TxDOT for any purpose whatsoever. TxDOT assumes no responsibility for the conversion of this standard to other formats or for incorrect results or damages resulting from its use.

DN: LR
CK: CW
DW: DN
CK: MT

LEVELS DISPLAYED
DATE:
ACC: d58hplc/ /d580504
FILE:

STANDARD PLANS
TEXAS DEPARTMENT OF TRANSPORTATION
Traffic Operations Division

GUIDE SIGN ATTACHMENTS SERVICES / EXIT PANELS

IE(2)-95(M)

FILE NAME	July 1972	DN-LR	CK-	DW-DN	CK-
REVISIONS		STATE	DISTRICT	FEDERAL AID PROJECT	SHEET
9-93		TEXAS			
12-94		15	6	CD24(2-1-95)	362
8-95		COUNTY		CONTROL	SECTION	JOB	HIGHWAY
		BEXAR		242	01	023	LP1604

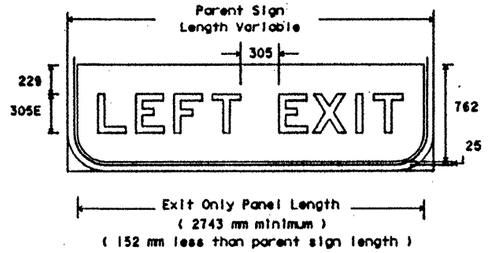

E11-2a

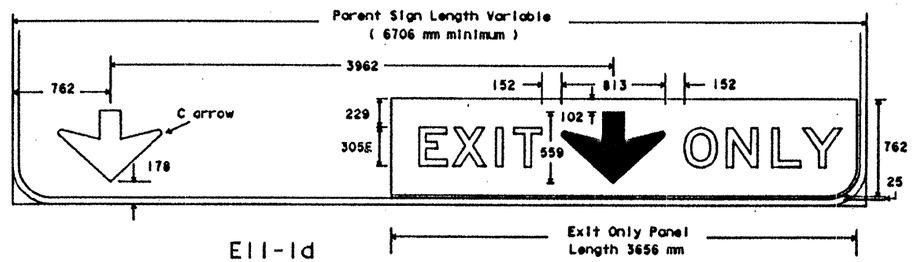

E11-1d

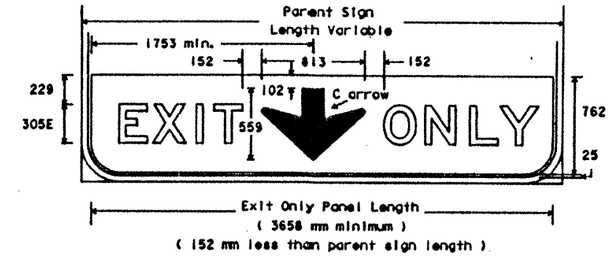

E11-1

ATTACHMENT TO EXISTING SIGNS ONLY

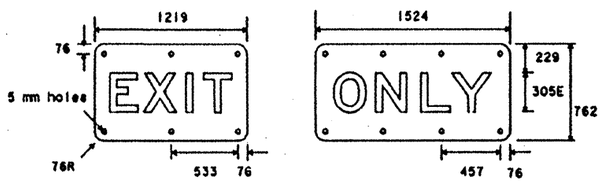

E11-1b

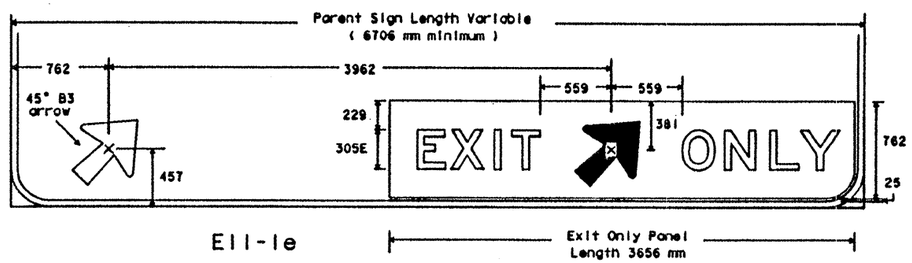

E11-1e

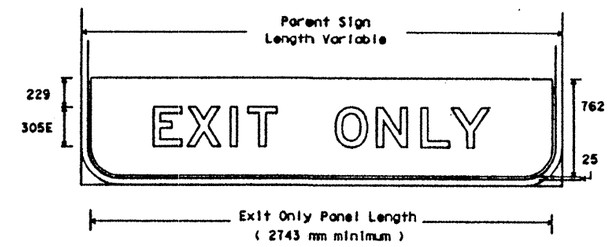

E11-1a

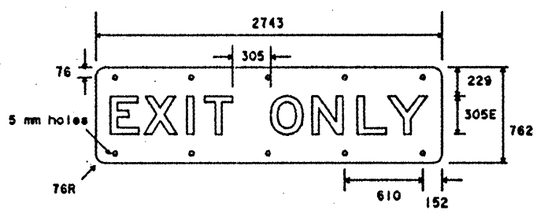

E11-1c

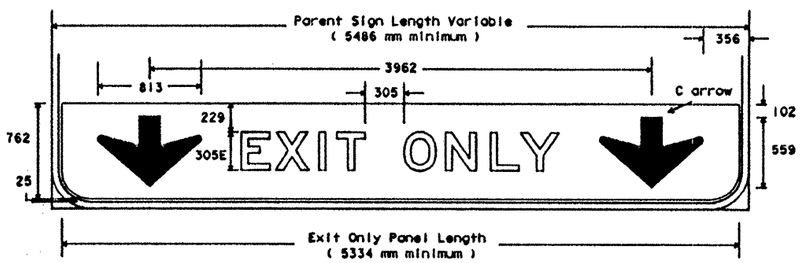

E11-1f

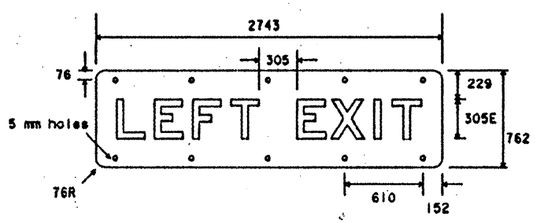

E11-2c

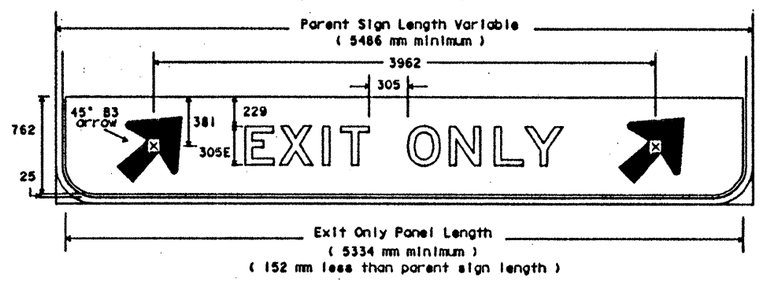

E11-1g

Attachment to Sequence Signs Only

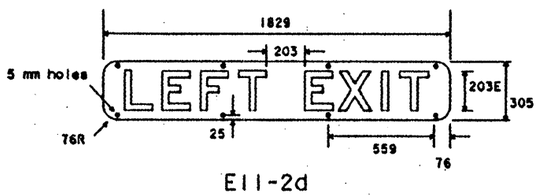

E11-2d

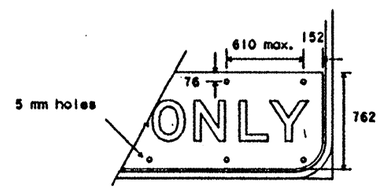

SPECIFICATION REFERENCE TABLE	
MATERIALS AND TESTS DIVISION SPECIFICATIONS	
ALUMINUM SIGN BLANKS	D-9-7110
REFLECTIVE SHEETING, TYPE C (HIGH SPECIFIC ITENSITY)	D-9-8300
VINYL NON-REFLECTIVE DECAL SHEETING	D-9-8320

GENERAL NOTES:

The alphabets and lateral spacing between letters and numerals shall conform with the Texas "Manual on Uniform Traffic Control Devices for Streets and Highways", latest edition, and any approved changes thereto. Lateral spacing of text shall provide a balanced appearance. All materials shall conform to Department Specifications.

Legend shall be black and applied by screening process, cut-out vinyl non-reflective decal sheeting or combination thereof. Background shall be yellow reflective sheeting (Type C).

Panels shall be one piece 0.063 inch thick sheet aluminum alloy (Type A).

Mounting details and arrow dimension are shown on Standard Plan Sheets IM(2).

All dimensions are in millimeters unless otherwise noted.

The metric dimensions shown on this sheet have been rounded, and should be considered equivalent to the English dimensions in the "1980 Standard Highway Sign Designs for Texas" manual.

STANDARD PLANS
TEXAS DEPARTMENT OF TRANSPORTATION
Traffic Operations Division

EXIT ONLY AND LEFT EXIT PANELS

IE(4)-95(M)

2010 Urban DATE:	DN: LR	CK: WT	DW: DN	CK:	NBR SHL:
January 1987					

REVISIONS: 7-90, 9-93, 8-95

STATE DISTRICT		FEDERAL AID PROJECT		SHEET
15	6	CD 2452-1-35		368
COUNTY		CONTROL	SECTION	JOB
BEXAR		2452	01	035

HIGHWAY: LP 1604

LEVELS DISPLAYED: 1 2 3 4 5 6 7 8 9 10 11 12 13 14 15 16 17 18 19 20 21 22 23 24 25 26 27 28 29 30 31 32 33 34 35 36 37 38 39 40 41 42 43 44 45 46 47 48 49 50 51 52 53 54 55 56 57 58 59 60 61 62 63 64

DATE: ACC: d58hpic/ FILE: 580504

DN: LR CK: CW DW: DN CK: MT

DISCLAIMER
The use of this standard is governed by the "Texas Engineering Practice Act". No warranty of any kind is made by TxDOT for any purpose whatsoever. TxDOT assumes no responsibility for the conversion of this standard to other formats or for incorrect results or damages resulting from its use.

DISCLAIMER
The use of this standard is governed by the "Texas Engineering Practice Act". No warranty of any kind is made by TxDOT for any purpose whatsoever. TxDOT assumes no responsibility for the conversion of this standard to other formats or for incorrect results or damages resulting from its use.

TYPICAL ATTACHMENT OF ROUTE MARKERS AND "EXIT ONLY" PANELS TO GUIDE SIGNS

SCREW ATTACHMENT

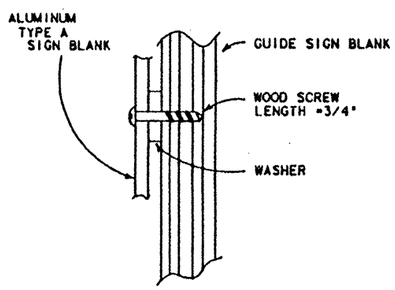

PLYWOOD GUIDE SIGN
(16 mm PLYWOOD)

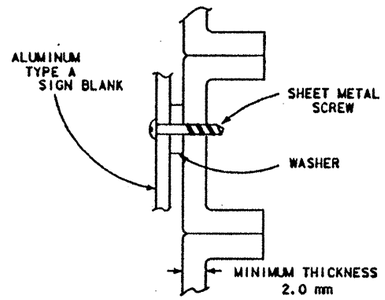

ALUMINUM GUIDE SIGNS
(EXTRUDED ALUMINUM PANELS)

NUT/BOLT ATTACHMENT

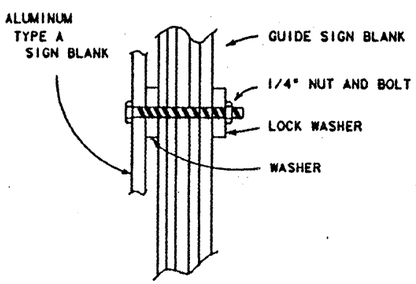

PLYWOOD GUIDE SIGN
(16 mm PLYWOOD)

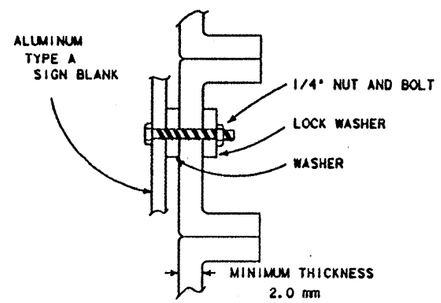

ALUMINUM GUIDE SIGNS
(EXTRUDED ALUMINUM PANELS)

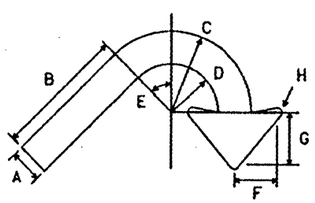

E3 and E3a

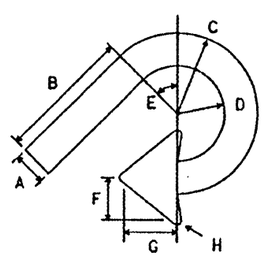

E4 and E4a

CODE	USED ON SIGN NO.	A	B	C	D	E	F	G	H
E-3 & E-4	E5-3 and E5-4	127	508	305	178	45o	165	203	19
E-3a & E-4a	E5-3a and E5-4a	89	356	216	127	45o	114	140	13

All dimensions are in millimeters unless otherwise noted.

The metric dimensions shown on this sheet have been rounded, and should be considered equivalent to the English dimensions in the "1980 Standard Highway Sign Designs for Texas" manual.

SIGN BLANK PUNCHING DETAILS FOR ROUTE MARKERS WHEN ATTACHED TO GUIDE SIGN

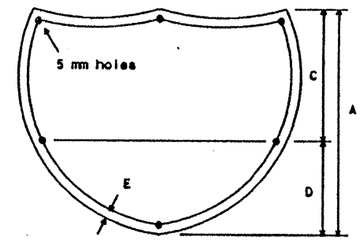

INTERSTATE ROUTE MARKERS

A	C	D	E
914	533	381	38
1219	711	508	44

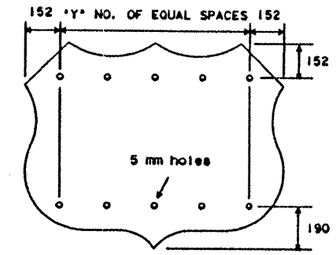

U.S. ROUTE MARKERS

Sign Type	"Y"
MI-4D2	2
MI-4D3	3
MI-4E2	3
MI-4E3	4
MI-4F2	4
MI-4F3	5

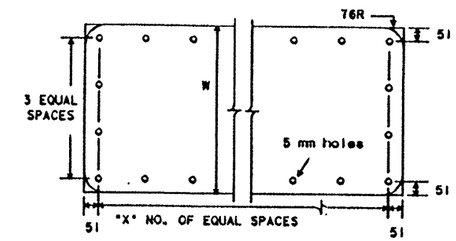

STATE ROUTE MARKERS

No. of Digits	W	X
4	610	4
4	914	5
4	1219	6
3	610	3
3	914	4
3	1219	5

ARROW DIMENSION DETAILS

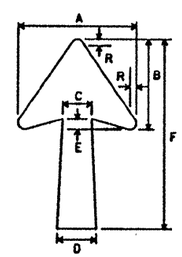

Type A or Type B

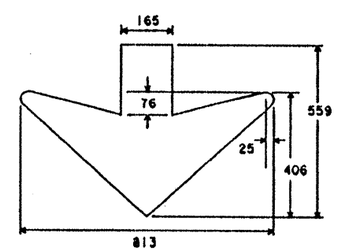

Type C

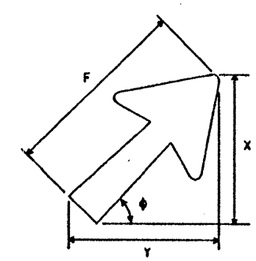

CODE	LETTER SIZE	A	B	C	D*	E	F*	R	ϕ = 30° X	ϕ = 30° Y	ϕ = 45° X	ϕ = 45° Y	ϕ = 60° X	ϕ = 60° Y
		ARROW DIMENSIONS IN INCHES												
A-1	203 Caps	384	294	95	127	33	616	21	397	565	486	486	568	397
A-2	339 U.C., 254-305 Caps	464	356	114	152	38	743	19	470	686	584	584	686	483
A-3	406 U.C.	565	432	137	181	44	905	25	575	832	711	711	832	578
B-1	8-10" Caps	362	249	86	114	33	438	19	318	413	356	356	410	318
B-2	339 U.C., 305 Caps	444	298	111	143	38	522	22	394	486	422	422	483	394
B-3	406 U.C.	556	362	127	171	44	635	25	486	597	517	517	597	489

WHERE AN ARROW IS REQUIRED ON A GUIDE SIGN WHICH HAS A HEIGHT OF 610 mm AND WHICH IS USUALLY ERECTED ON RAMPS AND CROSSROADS AT INTERCHANGES, THE ARROW SHALL BE TYPE B-1.

* RECOMMENDED DIMENSIONS: TAPER SHOULD BE HELD CONSTANT FOR LONGER OR SHORTER SHAFT LENGTHS.

SPECIFICATION REFERENCE TABLE
MATERIALS AND TEST SPECIFICATIONS (D-9)

ALUMINUM SIGN BLANKS	D-9-7110
SIGN HARDWARE	D-9-7120
FLAT SURFACE REFLECTIVE SHEETING, TYPE C (HIGH SPECIFIC INTENSITY)	D-9-8300

GENERAL NOTES:

Route markers attached to guide signs shall be one piece sheet aluminum alloy conforming with Department Specification "Aluminum Signs (Type A)." Sketches shown are examples only.

Screws and washers shall be used unless otherwise noted in the plans. Screws or bolts, nuts and washers shall be stainless steel or aluminum.

Screws for plywood signs shall not protrude through the back of the sign. All holes required in the punching detail of blank, shall have screws or nuts and bolts.

Arrows shall be cut-out reflective sheeting (Type C) applied directly to sign background, or reflective sheeting (Type C) applied to one piece 1.6 mm thick sheet aluminum alloy conforming with Department Specification "Aluminum Signs (Type A)." Attachment to of arrows applied to sheet aluminum alloy shall be as illustrated for sign blanks.

STANDARD PLANS
TEXAS DEPARTMENT OF TRANSPORTATION
Traffic Operations Division

ARROW AND ROUTE MARKER ATTACHMENT DETAILS FOR GUIDE SIGNS

IM(2)-93(M)

DATE: July 1990	DN-LR	CK-	DW-DN	CK-	HCS 90.1
REVISIONS 9-93					
15	6	CG2452-1-35			369
COUNTY					
REFUGIO		2452	1-35	1083	IH/FM 40

LEVELS 1 2 3 4 5 6 7 8
TED 1 2 3 4 5 6 7 8 9 10 11 12 13 14 15 16 17 18 19 20 21 22 23 24 25 26 27 28 29 30 31 32 33 34 35 36 37 38 39 40 41 42 43 44 45 46 47 48 49 50 51 52 53 54 55 56 57 58 59 60 61 62 63
DATE:
ACC: d58hplc/usl
FILE:
J504
DN: LR
CK: CW
DW: DN
CK: MT

INTERSTATE ROUTE MARKERS FOR INDEPENDENT USE

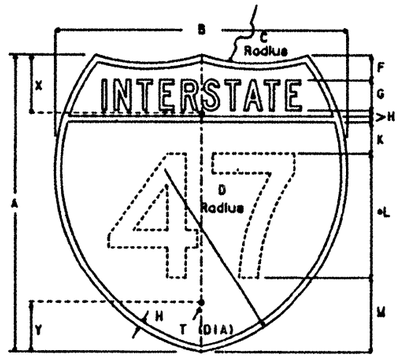

MI-1A2
610 x 610

MI-1B2
914 x 914

Letters - White Reflective
Numerals - White Reflective
Border - White Reflective
Background (Upper Portion) - Red Reflective
Background (Lower Portion) - Blue Reflective

	MI-1A2 254 NUMERALS 2 DIGIT	MI-1B2 381 NUMERALS 2 DIGIT
A	610	914
B	610	914
C	381	572
D	381	572
F	51	76
G	64 C	95 C
H	13	19
K	64	95
*L	254 D	381 D
M	152	229
T	10	10
X	121	181
Y	102	152
AREA	0.30 sq m	0.67 sq m

*NOTE: In a few cases numerals cannot be accommodated within the space available. For these cases, the standard series D numeral may be reduced to series C, or as a second choice to the next smaller height commonly available.

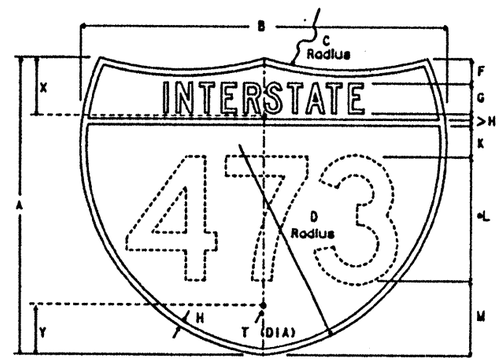

MI-1A3
762 x 610

MI-1B3
1143 x 914

Letters - White Reflective
Numerals - White Reflective
Border - White Reflective
Background (Upper Portion) - Red Reflective
Background (Lower Portion) - Blue Reflective

NOTE: MI-1B3 SHALL BE 0.100 INCH THICK ONE PIECE SHEET ALUMINUM ALLOY CONFORMING WITH DEPARTMENT SPECIFICATION ITEM "ALUMINUM SIGNS (TYPE A)."

	MI-1A3 254 NUMERALS 2 DIGIT	MI-1B3 381 NUMERALS 2 DIGIT
A	610	914
B	762	1143
C	610	914
D	432	648
F	51	76
G	64 C	95 C
H	13	19
K	64	95
*L	254 D	381 D
M	152	229
T	10	10
X	121	181
Y	102	152
AREA	0.39 sq m	0.87 sq m

SPECIFICATION REFERENCE TABLE
MATERIALS AND TESTS DIVISION SPECIFICATIONS
ALUMINUM SIGN BLANKS D-9-7110
REFLECTIVE SHEETING, TYPE C
(HIGH SPECIFIC INTENSITY) D-9-8300

GENERAL NOTES:

The alphabets and lateral spacing between letters and numerals shall conform with the Texas "Manual on Uniform Traffic Control Devices for Streets and Highways", latest edition, and any approved changes thereto. Lateral spacing of text shall provide a balanced appearance. All materials shall conform to Department Specifications.

Legend for Interstate route markers shall be applied by reverse screening process with transparent colored ink, cut-out white reflective sheeting applied to colored background or combination thereof. Background shall be reflective sheeting (Type C).

Sign blanks for 610 mm height shields shall be 2.0 mm thick and 914 mm height shields shall be 2.5 mm thick one piece sheet aluminum alloy conforming with Department Specification "Aluminum Signs (Type A)".

OFF INTERSTATE ROUTE MARKERS FOR INDEPENDENT USE

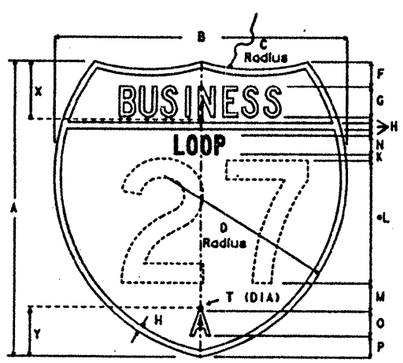

MI-2A2
610 x 610

MI-2B2
914 x 914

Letters - White Reflective
Numerals - White Reflective
Border - White Reflective
Background - Green Reflective

	MI-2A2 254 NUMERALS 2 DIGIT	MI-2B2 381 NUMERALS 2 DIGIT
A	610	914
B	610	914
C	381	572
D	381	572
F	51	76
G	64 C	95 C
H	13	19
K	13	19
*L	254 D	381 D
M	57	89
N	38 D	57 D
O	51 D	51 D
P	44	89
T	10	10
X	121	181
Y	102	152
AREA	0.30 sq m	0.67 sq m

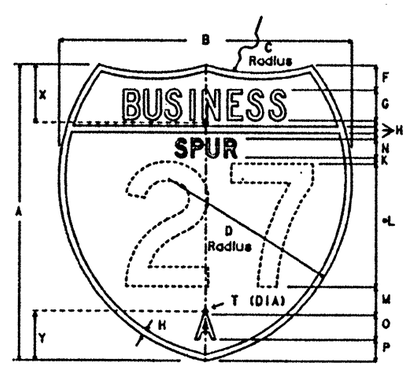

MI-3A2
610 x 610

MI-3B2
914 x 914

Letters - White Reflective
Numerals - White Reflective
Border - White Reflective
Background - Green Reflective

	MI-3A2 254 NUMERALS 2 DIGIT	MI-3B2 381 NUMERALS 2 DIGIT
A	610	914
B	610	914
C	381	572
D	381	572
F	51	76
G	64 C	95 C
H	13	19
K	13	19
*L	254 D	381 D
M	57	89
N	38 D	57 D
O	51 D	51 D
P	44	89
T	10	10
X	121	181
Y	102	152
AREA	0.30 sq m	0.67 sq m

*NOTE: In a few cases numerals cannot be accommodated within the space available. For these cases, the standard series D numeral may be reduced to series C, or as a second choice to the next smaller height commonly available.

All dimensions are in millimeters unless otherwise noted.

The metric dimensions shown on this sheet have been rounded, and should be considered equivalent to the English dimensions in the "1980 Standard Highway Sign Designs for Texas" manual.

STANDARD PLANS
TEXAS DEPARTMENT OF TRANSPORTATION
Traffic Operations Division

INTERSTATE MARKERS FOR INDEPENDENT MOUNTING

IM(3)-93(M)

FILE NAME DATE: July 1990	DN: LR	CK:	DW: DW	CK:	CK: MT
REVISIONS 9-93	STATE DISTRICT 15	COUNTY 6	FEDERAL AID PROJECT 0352452-F35		SHEET 330
	COUNTY BEXAR		CONTROL 2452	SECTION 01	JOB 035

DISCLAIMER
The use of this standard is governed by the "Texas Engineering Practice Act". No warranty of any kind is made by TxDOT for any purpose whatsoever. TxDOT assumes no responsibility for the conversion of this standard to other formats or for incorrect results or damages resulting from its use.

DN: LR
CK: DW
DW: DW
CK: MT

DATE:
ACC: d58hpl /d580504
FILE:

LEVELS DISPLAYED

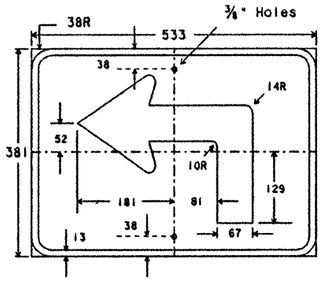

M5-1BL
M5-1BR
533x381

M5-1GL
M5-1GR
533x381

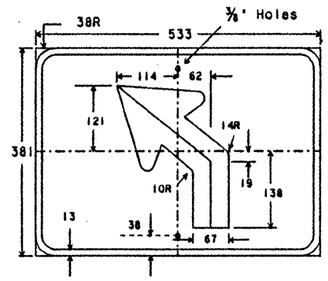

M5-2BL
M5-2BR
533x381

M5-2GL
M5-2GR
533x381

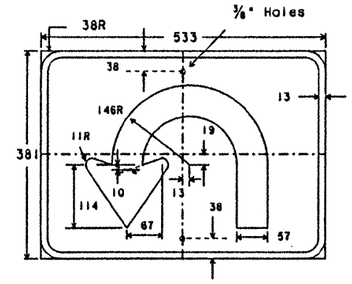

M5-3BL
533x381

M5-3GL
533x381

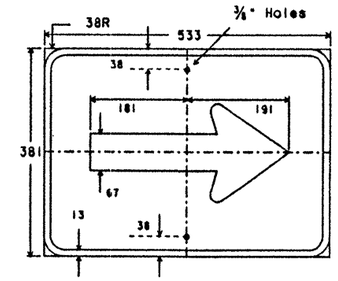

M6-1B
533x381

M6-1G
533x381

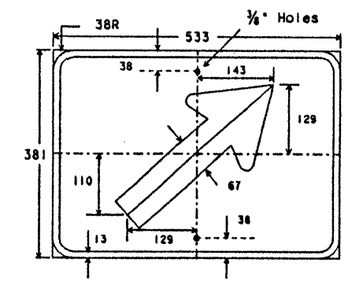

M6-2BR
M6-2BL
533x381

M6-2GR
M6-2GL
533x381

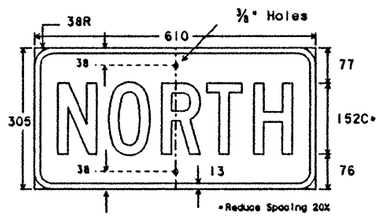

M3-1B
610x305

M3-1G
610x305

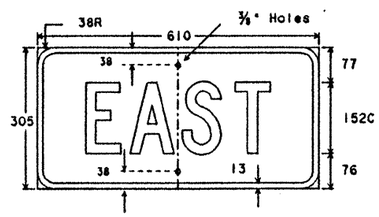

M3-2B
610x305

M3-2G
610x305

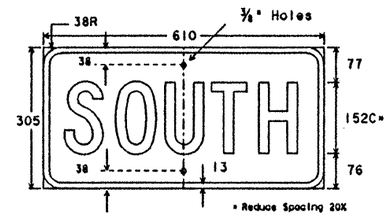

M3-3B
610x305

M3-3G
610x305

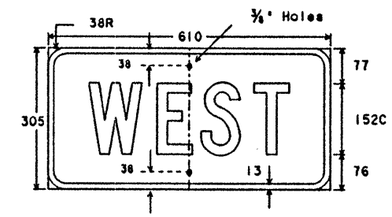

M3-4B
610x305

M3-4G
610x305

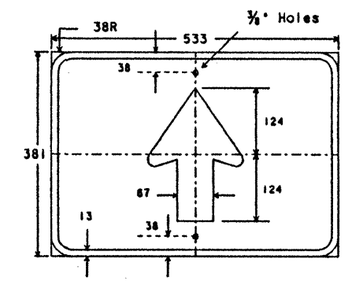

M6-3B
533x381

M6-3G
533x381

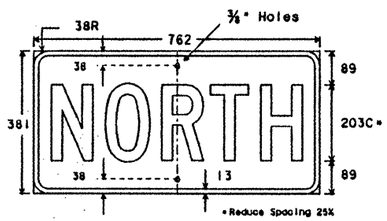

SM3-1B
762x381

SM3-1G
762x381

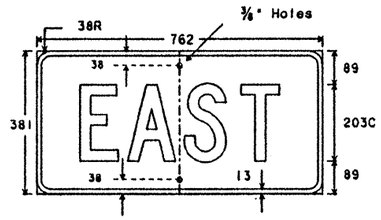

SM3-2B
762x381

SM3-2G
762x381

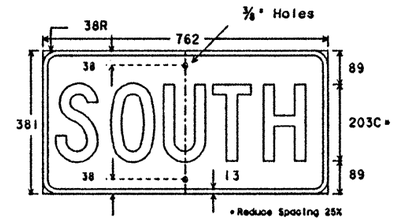

SM3-3B
762x381

SM3-3G
762x381

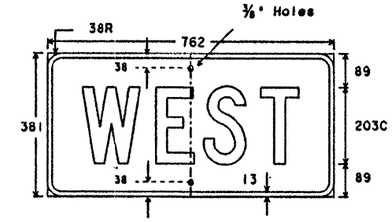

SM3-4B
762x381

SM3-4G
762x381

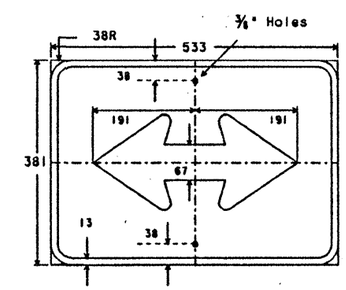

M6-4B
533x381

M6-4G
533x381

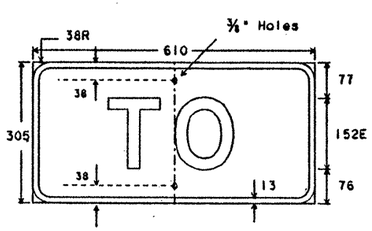

M4-5B
610x305

M4-5G
610x305

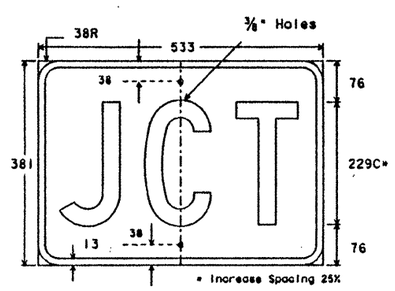

M2-1B
533x381

M2-1G
533x381

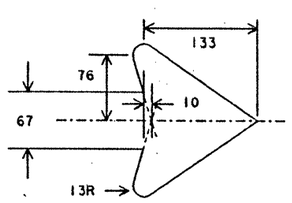

SPECIFICATION REFERENCE TABLE

MATERIALS AND TESTS DIVISION SPECIFICATIONS	
ALUMINUM SIGN BLANKS	D-9-7110
REFLECTIVE SHEETING, TYPE C (HIGH SPECIFIC INTENSITY)	D-9-8300

GENERAL NOTES:

The Alphabets and lateral spacing between letters and numerals shall conform with the Texas "Manual on Uniform Traffic Control Devices for Streets and Highways", latest edition, and any approved changes thereto. Lateral spacing of text shall provide a balanced appearance. All materials shall conform to Department Specifications.

Legend shall be applied by reverse screening process with transparent colored ink, cut-out white reflective sheeting applied to colored background or combination thereof. Background shall be reflective sheeting (Type C).

Sign blanks shall be one piece 2.0 mm thick sheet aluminum alloy (Type A), unless otherwise noted elsewhere in the plans.

All signs detailed on this sheet shall have white border, legend and/or symbol on a blue or green background.

All dimensions are in millimeters unless otherwise noted.

The metric dimensions shown on this sheet have been rounded, and should be considered equivalent to the English dimensions in the "1980 Standard Highway Sign Designs for Texas" manual.

DISCLAIMER
The use of this standard is governed by the "Texas Engineering Practice Act". No warranty of any kind is made by TxDOT for any purpose whatsoever. TxDOT assumes no responsibility for the conversion of this standard to other formats or for incorrect results or damages resulting from its use.

DN: LR
CK: CW
DW: DN
CK: MT

DATE:
FILE: d58hplc/usr/d580504

STANDARD PLANS
TEXAS DEPARTMENT OF TRANSPORTATION
Traffic Operations Division

INTERSTATE ROUTE MARKER AUXILIARIES

IM(4)-93(M)

ORIG. DRAWN DATE: JULY 1990	DWN: LR	CK: -	DWN: DN	CK: -	MSG NO.:
REVISIONS: 9-93	STATE DISTRICT	FEDERAL REGION	FEDERAL AID PROJECT		SHEET
	15	6	(D)2452-1-35		371
	COUNTY		CONTROL	SECTION	JOB	HIGHWAY
	BEXAR		2452	1	035	LP1604

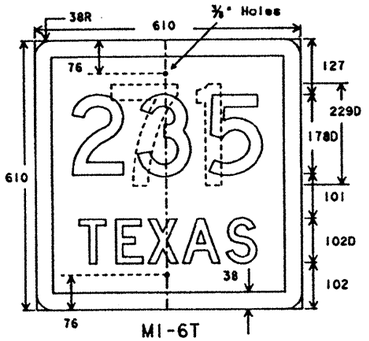

MI-6T
610x610

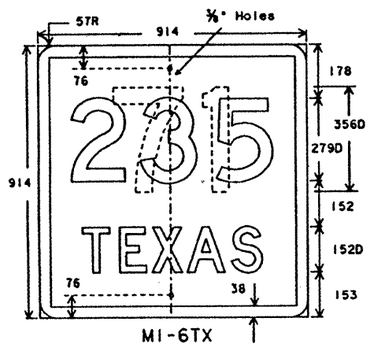

MI-6TX
914x914

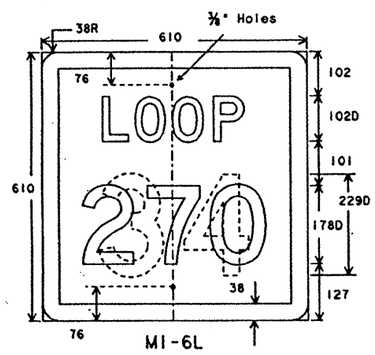

MI-6L
610x610

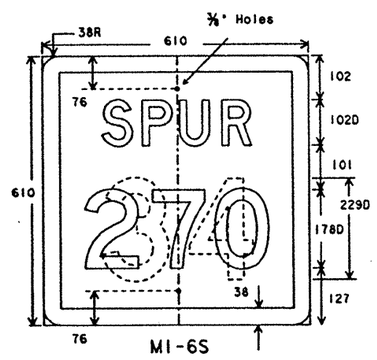

MI-6S
610x610

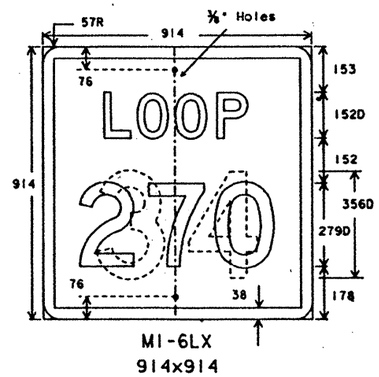

MI-6LX
914x914

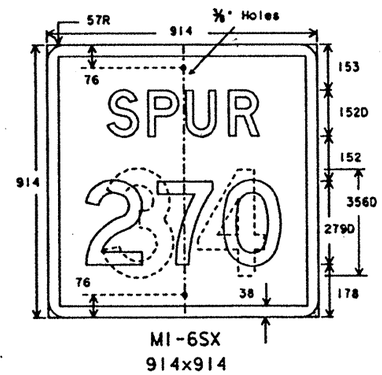

MI-6SX
914x914

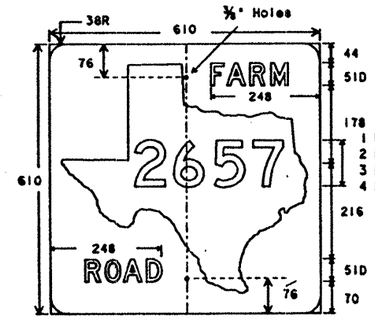

Letters - White Reflective
Numerals - Black
Symbol - White Reflective
Background - Black

MI-6F
610x610

MI-6FX
914x914

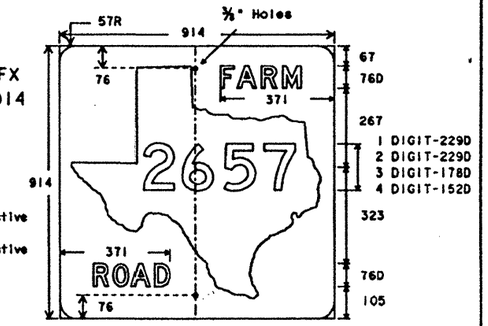

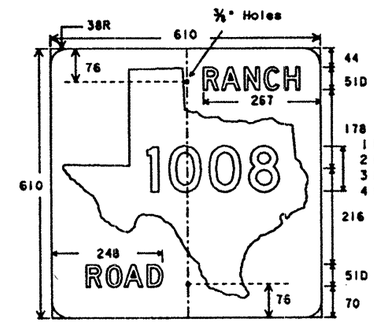

Letters - White Reflective
Numerals - Black
Symbol - White Reflective
Background - Black

MI-6R
610x610

MI-6RX
914x914

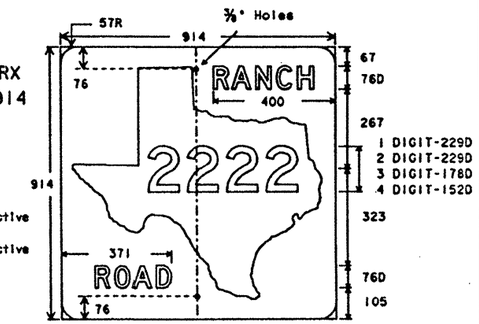

		SIZE	A	B	C	D
MI-4A2	305 NUMERALS 2 DIGIT	610x610	127	178	127	51
MI-4A3	305 NUMERALS 3 DIGIT	762x610	127	254	229	51
MI-4B2	457 NUMERALS 2 DIGIT	914x914	190	267	190	76
MI-4B3	457 NUMERALS 3 DIGIT	1142x914	190	381	343	76

E	F	G	H	M*	N	P
178	25	127	13	305D	140	165
178	102	203	13	305D	140	165
267	38	190	19	457D	209	248
267	152	304	19	457D	209	248

R	S	T	AREA
38	76	10	29543
38	76	10	37625
57	76	10	66425
57	76	10	84634

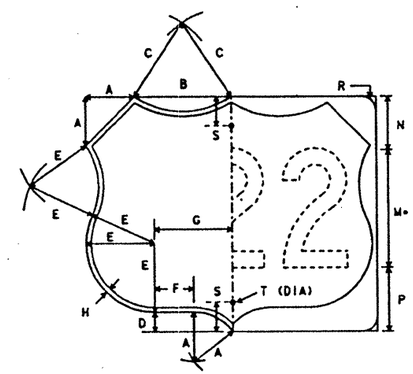

Numerals - Black
Border - Black
Background - White Reflective

SPECIFICATION REFERENCE TABLE

MATERIALS AND TESTS DIVISION SPECIFICATION	
ALUMINUM SIGN BLANKS	D-9-7110
FLAT SURFACE REFLECTIVE SHEETING, TYPE A (ENGINEER GRADE)	D-9-8300
VINYL NON-REFLECTIVE DECAL SHEETING	D-9-8320

GENERAL NOTES:

Route Markers are to be used as confirming and reassurance route markers and as component parts of a Junction, Route Turn, Directional, or Trailblazer assembly.

The alphabets and lateral spacing between letters and numerals shall conform with the Texas "Manual on Uniform Traffic Control Devices for Streets and Highways", latest edition, and any approved changes thereto. Lateral spacing of text shall provide a balanced appearance. All materials shall conform to Department Specifications.

Legend (except where noted), shall be black and applied by screening process, cut-out vinyl non-reflective decal sheeting or combination thereof. Legend on MI-6F, MI-6FX, MI-6R, MI-6RX and U.S. route markers shall be applied by reverse screening process, cut-out black vinyl non-reflective decal sheeting or combination thereof. Background shall be white reflective sheeting (Type A).

A print of the Texas state outline may be obtained from the Department to be used in making a stencil.

Sign blanks shall be one piece sheet aluminum alloy (Type A). 610x610 mm blanks shall be 2.0 mm thick, 914x914 mm and larger blanks shall be 2.5 mm thick, unless otherwise noted elsewhere in the plans.

All dimensions are in millimeters unless otherwise noted.

The metric dimensions shown on this sheet have been rounded, and should be considered equivalent to the English dimensions in the "1980 Standard Highway Sign Designs for Texas" manual.

DISCLAIMER
The use of this standard is governed by the "Texas Engineering Practice Act". No warranty of any kind is made by TxDOT for any purpose whatsoever. TxDOT assumes no responsibility for the conversion of this standard to other formats or for incorrect results or damages resulting from its use.

DW: DN
CK: MT

ACC: d58hc1:~/usr/d580s04
FILE:

STANDARD PLANS
TEXAS DEPARTMENT OF TRANSPORTATION
Traffic Operations Division

U.S. & STATE ROUTE MARKERS FOR INDEPENDENT MOUNTING

M(1)-95(M)

FILE NAME DATE: JULY 1972	DW: LR	CK:	DN: DN	CK:	HES NO.:
REVISIONS: 10-73 8-95, 1-82, 1-85, 7-90	STATE DISTRICT: TS	FEDERAL AID REGION: 6	FEDERAL AID PROJECT: ID2452-1-35		SHEET: 322
	COUNTY: BEXAR		CONTROL: 2452	SECTION: 01	JOB: 035 HIGHWAY: IH 10

Metric 5A

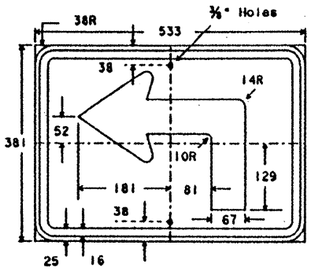

M5-1L
M5-1R
533x381

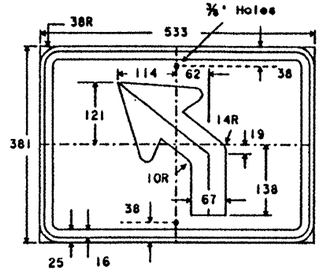

M5-2L
M5-2R
533x381

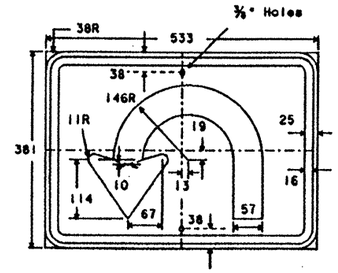

M5-3L
533x381

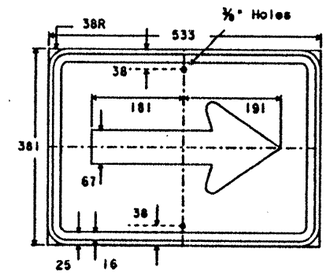

M6-1
533x381

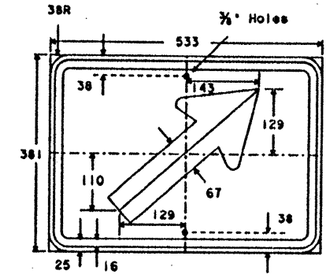

M6-2L
M6-2R
533x381

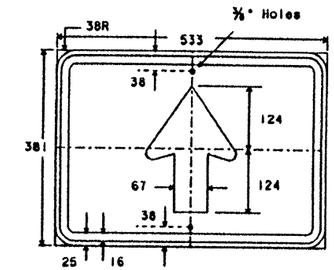

M6-3
533x381

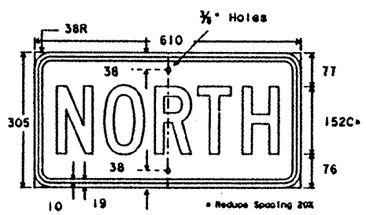

M3-1
610x305

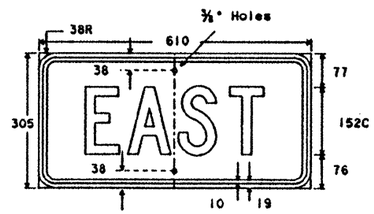

M3-2
610x305

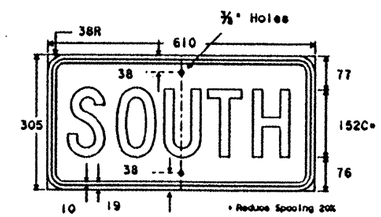

M3-3
610x305

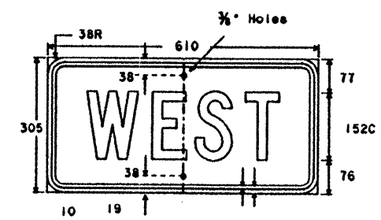

M3-4
610x305

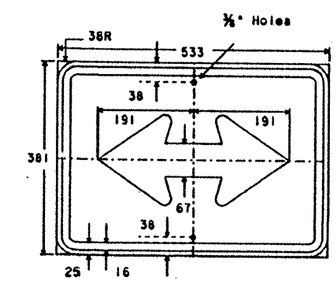

M6-4
533x381

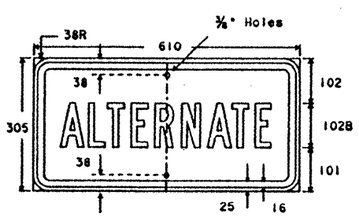

M4-1
610x305

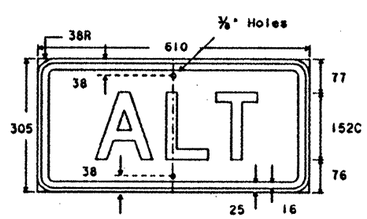

M4-1a
610x305

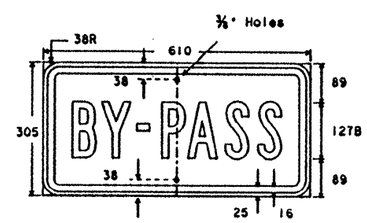

M4-2
610x305

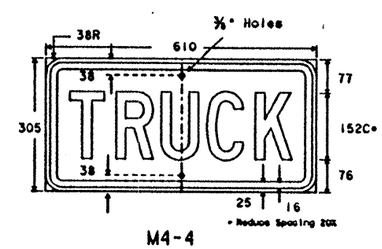

M4-4
610x305

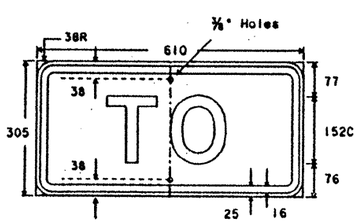

M4-5
610x305

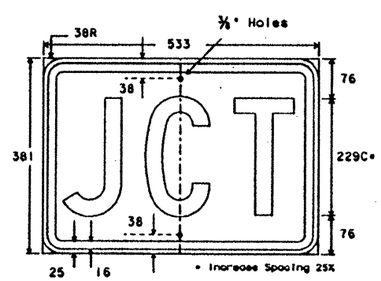

M2-1
533x381

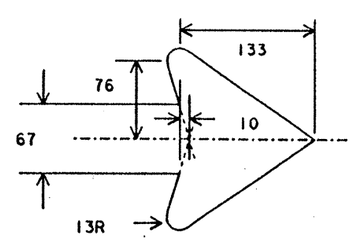

All dimensions are in millimeters unless otherwise noted.

The metric dimensions shown on this sheet have been rounded, and should be considered equivalent to the English dimensions in the "1980 Standard Highway Sign Designs for Texas" manual.

SPECIFICATION REFERENCE TABLE

MATERIALS AND TESTS DIVISION SPECIFICATIONS	
ALUMINUM SIGN BLANKS	D-9-7110
REFLECTIVE SHEETING, TYPE A (ENGINEER GRADE)	D-9-8300
VINYL NON-REFLECTIVE DECAL SHEETING	D-9-8320

GENERAL NOTES:

The alphabets and lateral spacing between letters and numerals shall conform with the Texas "Manual on Uniform Traffic Control Devices for Streets and Highways", latest edition, and any approved changes thereto. Lateral spacing of text shall provide a balanced appearance. All materials shall conform to Department Specifications.

Legend (except where noted), shall be black and applied by screening process, cut-out vinyl non-reflective decal sheeting or combination thereof. Background shall be white reflective sheeting (Type A).

Sign blanks shall be one piece 2.0 mm thick sheet aluminum alloy (Type A), unless otherwise noted elsewhere in the plans.

STANDARD PLANS
TEXAS DEPARTMENT OF TRANSPORTATION
Traffic Operations Division

ROUTE MARKER AUXILIARIES

M(3)-95(M)

JULY 1990	DN: LR	CK:	DW: DN	CK:	
REVISIONS 8-95	STATE DISTRICT 15	FEDERAL AID PROJECT 6 CB2452-1-35			SHEET 373
COUNTY BEXAR		CONTROL 2452	SECTION 01	JOB 03	HIGHWAY LP1604

DISCLAIMER
The use of this standard is governed by the "Texas Engineer Practice Act". No warranty of any kind is made by TxDOT for any purpose whatsoever. TxDOT assumes no responsibility for the conversion of this standard to other formats or for incorrect results or damages resulting from its use.

d58hplc/user/d580504 ACC: FILE:
DN: CW
CK: DN
DW: MT
CK: MT

REFERENCE MARKER PLAQUE

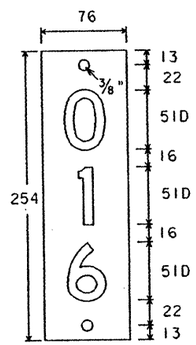

D10-7a
76x254

Letters - White Reflective
Numerals - White Reflective
Background - Green Reflective

Use preceding zero for total of three digits

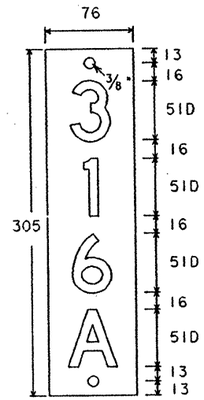

D10-7b
76x305

Letters - White Reflective
Numerals - White Reflective
Background - Green Reflective

TYPICAL ATTACHMENT MATERIAL

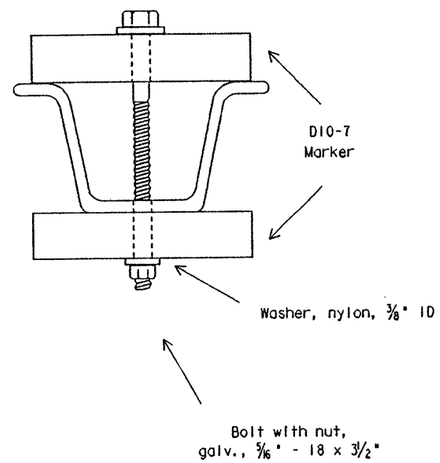

WINGED CHANNEL SUPPORT

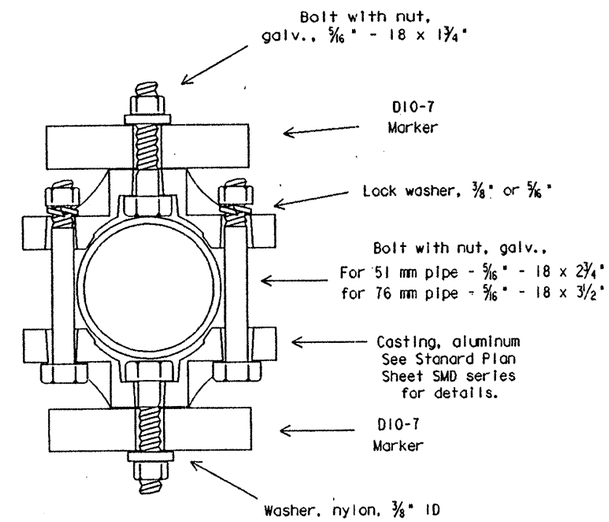

51 mm OR 76 mm ROUND PIPE SUPPORT

TYPICAL MOUNTING

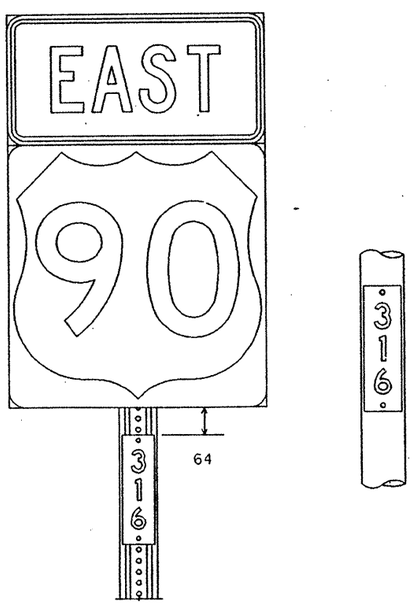

Reference Marker Plaque should cover existing milepost number, or old number should be removed. Plaques to be mounted back to back.

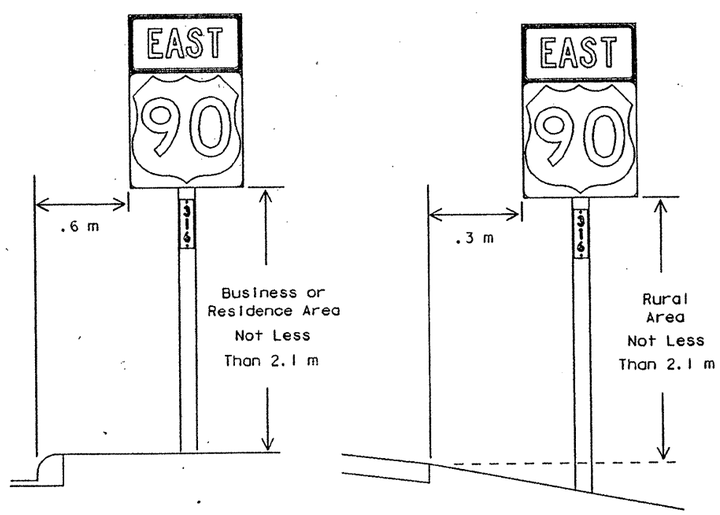

* See SMD(1-2)(M) for additional details on horizontal clearances

TYPE MOUNT
Use breakaway design that will leave a stub in ground, so mount can be accurately reinstalled.

SPECIFICATION REFERENCE TABLE
MATERIALS AND TESTS DIVISION SPECIFICATIONS

PLYWOOD SIGN BLANKS	D-9-7100
ALUMINUM SIGN BLANKS	D-9-7110
REFLECTIVE SHEETING, TYPE C (HIGH SPECIFIC INTENSITY)	D-9-8300

GENERAL NOTES:

The alphabets and lateral spacing between letters and numerals shall conform with the Texas "Manual on Uniform Traffic Control Devices for Streets and Highways", latest edition, and any approved changes thereto. Lateral spacing of text shall provide a balanced appearance. All materials shall conform to Department Specifications.

Legend shall be white cut-out reflective sheeting applied to colored background, or by reverse screening process with transparent colored ink. Background shall be reflective sheeting (Type C).

Reference Marker plaques shall be one piece 2.0 mm thick sheet aluminum alloy (Type A), or 16 mm thick plywood (Type A).

All dimensions are in millimeters unless otherwise noted.

The metric dimensions shown on this sheet have been rounded, and should be considered equivalent to the English dimensions in the "1980 Standard Highway Sign Designs for Texas" manual.

STANDARD PLANS
TEXAS DEPARTMENT OF TRANSPORTATION
Traffic Operations Division

REFERENCE MARKER AND MOUNTING

M(4)-95(M)

ORIG DRAW DATE: JULY 1990	DN-LR	CK-	DW-DN	CK-	MEG NO.-
REVISIONS 9-93 8-95	STATE DISTRICT 15	FEDERAL REGION 6	FEDERAL AID PROJECT CD2452-1-35		SHEET 374
	COUNTY BEXAR		CONTROL 2452	SECTION 01	JOB 035	HIGHWAY LP1604

Disclaimer:
The use of this standard is governed by the "Texas Engineering Practice Act". No warranty of any kind is made by TxDOT assumes no responsibility for the version of this standard to other formats or for incorrect results or damages resulting from its use.

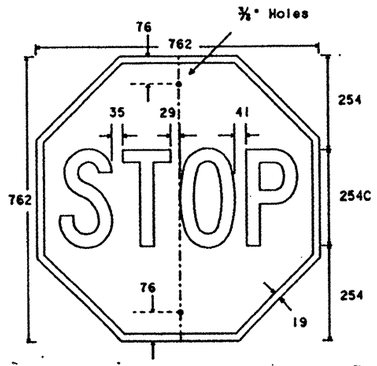

R1-1
762x762

Letters - White Reflective
Border - White Reflective
Background - Red Reflective

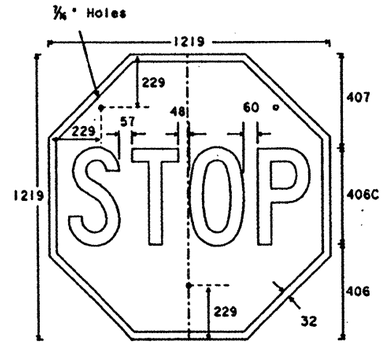

SR1-1
1219x1219

Letters - White Reflective
Border - White Reflective
Background - Red Reflective

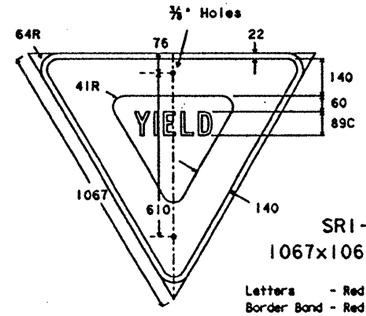

SR1-2
1067x1067x1067

Letters - Red Reflective
Border Band - Red Reflective
Background - White Reflective

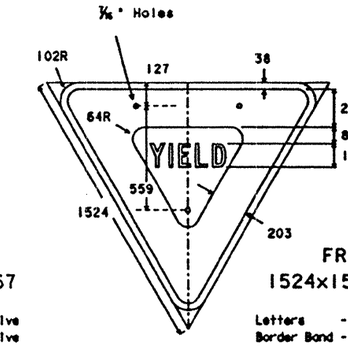

FR1-2
1524x1524x1524

Letters - Red Reflective
Border Band - Red Reflective
Background - White Reflective

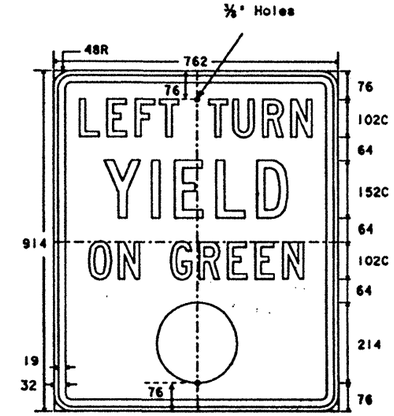

R10-12
762x914

Letters - Black
Border - Black
Circle - Green Refl.
Background - White Refl.

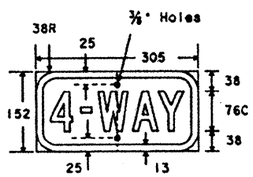

R1-3
305x152

Letters - White Reflective
Border - White Reflective
Background - Red Reflective

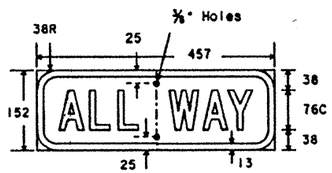

R1-4
457x152

Letters - White Reflective
Border - White Reflective
Background - Red Reflective

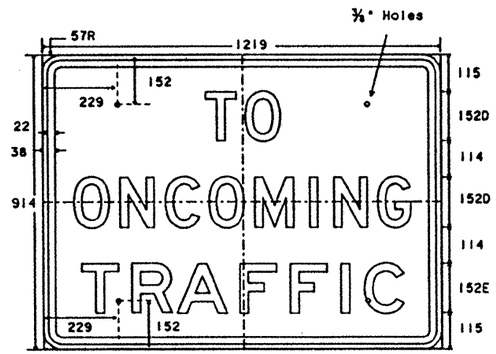

SR1-2b
1219x914

Legend - Black
Background - White Refl.

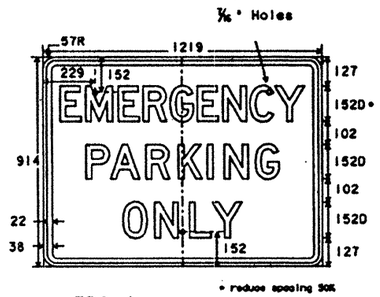

FR8-4
1219x914

Legend - Black
Background - White Refl.

STOPPING 152D
FR8-7

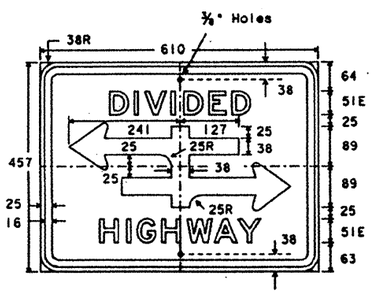

R6-3
610x457

Legend - Black
Background - White Refl.

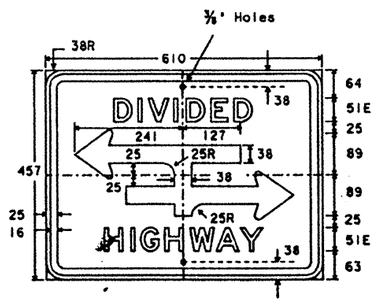

R6-3a
610x457

Legend - Black
Background - White Refl.

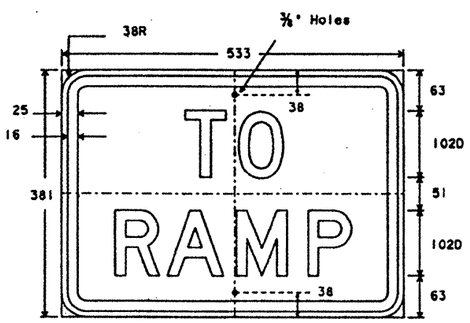

R1-2a
533x381

Legend - Black
Background - White Refl.

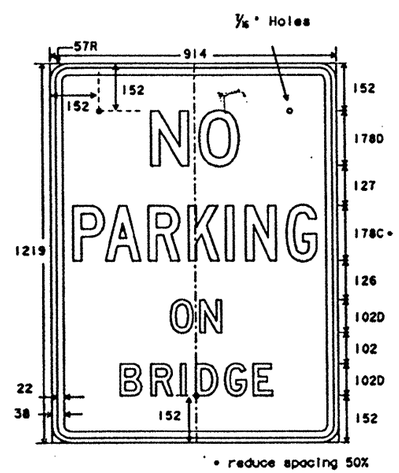

ER8-1T
914x1219

Letters -Red Reflective
Border -Red Reflective
Background - White Reflective

SPECIFICATION REFERENCE TABLE	
MATERIALS AND TESTS DIVISION SPECIFICATIONS	
PLYWOOD SIGN BLANKS	D-9-7100
REFLECTIVE SHEETING, TYPE A (ENGINEER GRADE) (FOR BLACK AND WHITE SIGNS ON THIS SHEET)	D-9-8300
REFLECTIVE SHEETING, TYPE C (HIGH SPECIFIC INTENSITY) (FOR RED SERIES SIGNS ON THIS SHEET)	D9--8300
VINYL NON-REFLECTIVE DECAL SHEETING	D-9-8320

GENERAL NOTES:

The alphabets and lateral spacing between letters and numerals shall conform with the Texas "Manual on Uniform Traffic Control Devices for Streets and Highways", latest edition, and any approved changes thereto. Lateral spacing of text shall provide a balanced appearance. All materials shall conform to Department Specifications.

Legend (except where noted), shall be applied by screening process of black and/or transparent colored ink, cut-out black vinyl non-reflective decal sheeting, and/or reflective sheeting or combination thereof. Legend on R1-1, SR1-1, R1-3 and R1-4 shall be applied by reverse screening process with transparent colored ink or cut-out white reflective sheeting applied to colored background or combination thereof. Background shall be reflective sheeting.

Sign blanks shall be one piece 16 mm thick plywood (Type A), unless otherwise noted elsewhere in the plans.

All dimensions are in millimeters unless otherwise noted.

The metric dimensions shown on this sheet have been rounded, and should be considered equivalent to the English dimensions in the "1980 Standard Highway Sign Designs for Texas" manual.

STANDARD PLANS
TEXAS DEPARTMENT OF TRANSPORTATION
Traffic Operations Division

REGULATORY SIGNS

R(1)-95(M)

FILE:	CK: MI	DN: FEB. 1976	CK: LR	DW: DN	CK:
REVISIONS		STATE	FEDERAL AID PROJECT		SHEET
1-85		15	6	CD 2452-1-35	376
7-90		COUNTY		CONTROL / SECTION / JOB	HIGHWAY
8-95		BEXAR		2452 / 01 / 03	VP 604

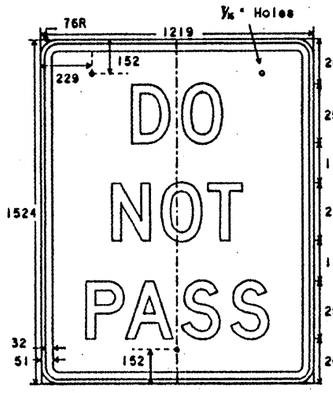

FR4-1
1219x1524

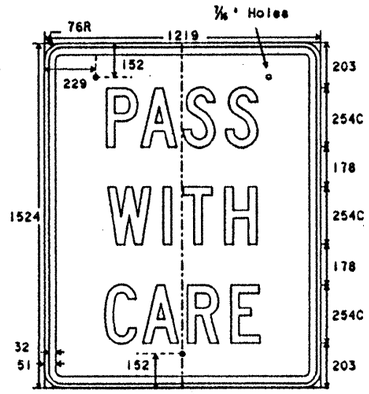

FR4-2
1219x1524

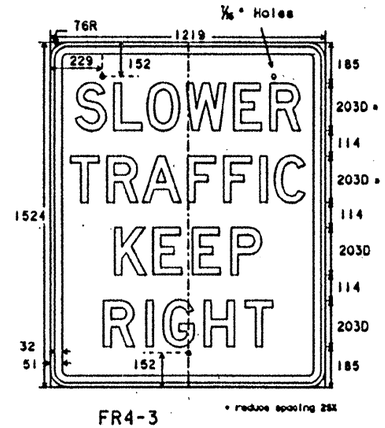

* reduce spacing 25%

FR4-3
1219x1524

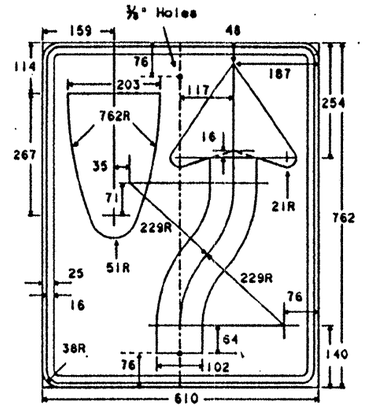

R4-7
610x762

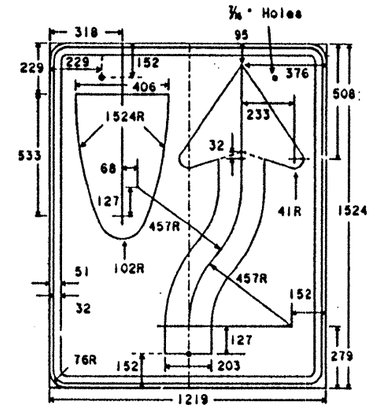

FR4-7
1219x1524

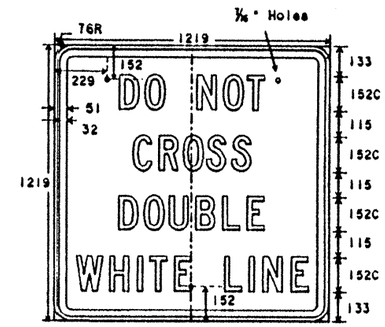

FR4-3B
1219x1219

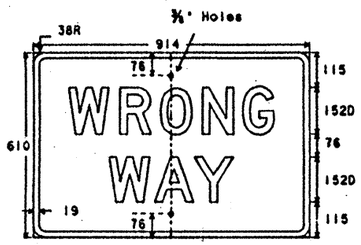

R5-1a
914x610

Letters - White Reflective
Border - White Reflective
Background - Red Reflective

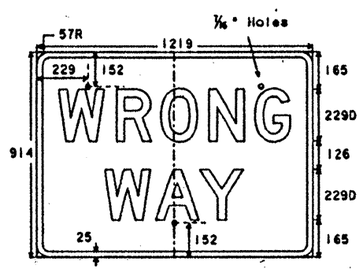

SR5-1a
1219x914

Letters - White Reflective
Border - White Reflective
Background - Red Reflective

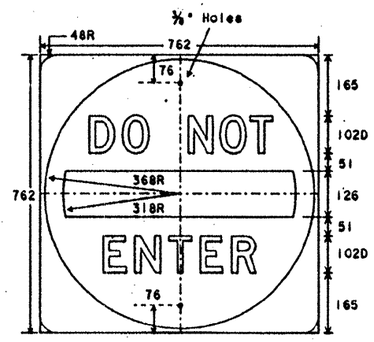

R5-1
762x762

Letters - White Reflective
Bar - White Reflective
Background - Red Reflective

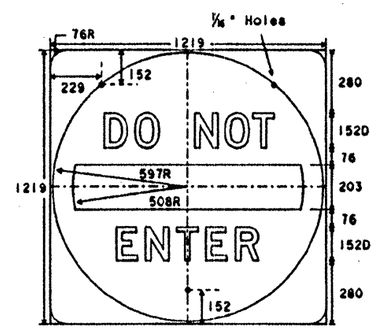

SR5-1
1219x1219

Letters - White Reflective
Bar - White Reflective
Background - Red Reflective

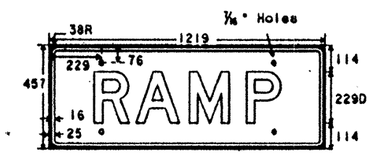

R5-1T
1219x457

Letters -Red Reflective
Border -Red Reflective
Background - White Reflective

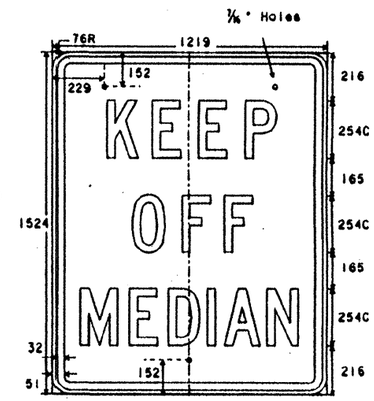

FR11-1
1219x1524

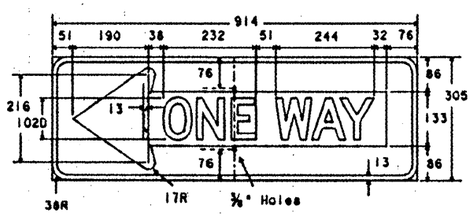

R6-1L
914x305

Letters - Black
Symbol - White Reflective
Border - White Reflective
Background - Black

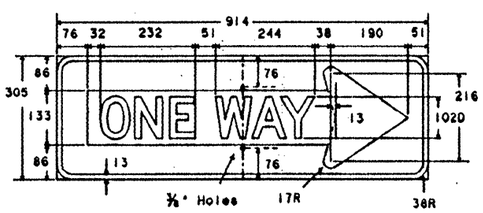

R6-1R
914x305

Letters - Black
Symbol - White Reflective
Border - White Reflective
Background - Black

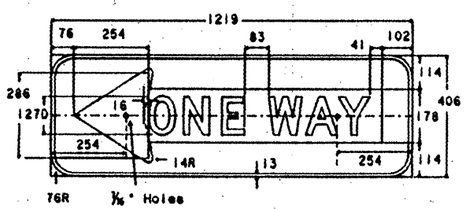

FR6-1L
1219x406

Letters - Black
Symbol - White Reflective
Border - White Reflective
Background - Black

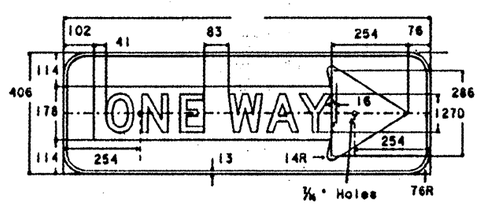

FR6-1R
1219x406

Letters - Black
Symbol - White Reflective
Border - White Reflective
Background - Black

All dimensions are in millimeters unless otherwise noted.

The metric dimensions shown on this sheet have been rounded, and should be considered equivalent to the English dimensions in the "1980 Standard Highway Sign Designs for Texas" manual.

SPECIFICATION REFERENCE TABLE

MATERIALS AND TESTS DIVISION SPECIFICATIONS	
PLYWOOD SIGN BLANKS	D-9-7100
REFLECTIVE SHEETING, TYPE A (ENGINEER GRADE) (FOR BLACK AND WHITE SIGNS ON THIS SHEET)	D-9-8300
REFLECTIVE SHEETING, TYPE C (HIGH SPECIFIC INTENSITY) (FOR RED SERIES SIGNS ON THIS SHEET)	D-9-8300
VINYL NON-REFLECTIVE DECAL SHEETING	D-9-8320

GENERAL NOTES:

The alphabets and lateral spacing between letters and numerals shall conform with the Texas "Manual on Uniform Traffic Control Devices for Streets and Highways", latest edition, and any approved changes thereto. Lateral spacing of text shall provide a balanced appearance. All materials shall conform to Department Specifications.

Legend (except where noted), shall be black and applied by screening process, cut-out vinyl non-reflective decal sheeting, and/or reflective sheeting or combination thereof. Legend on R5-1, ER5-1, SR5-1, R5-1T, R5-1a and SR5-1a shall be applied by reverse screening process with transparent colored ink or cut-out white reflective sheeting applied to colored background or combination thereof. Background shall be reflective sheeting.

Sign blanks shall be one piece 16 mm thick plywood (Type A), unless otherwise noted elsewhere in the plans.

STANDARD PLANS
TEXAS DEPARTMENT OF TRANSPORTATION
Traffic Operations Division

REGULATORY SIGNS

R(2)-95(M)

DGN BKM DATE: Feburary 1976	DW: LR	CK:	DW: DN	CK:	MSD NO.
REVISIONS: 1-85, 7-90, 8-95	STATE DISTRICT: 15	COUNTY: 6	FEDERAL AID PROJECT: Ch 2452		SHEET: 377
	COUNTY: BEXAR		CONTROL: 2452	SECTION: 01	JOB: 035

DISCLAIMER
The use of this standard is governed by the "Texas Engineer Practice Act". No warranty of any kind is made by TxDOT for any purpose whatsoever. TxDOT assumes no responsibility for the conversion of this standard to other formats or for incorrect results or damages resulting from its use.

DW: DN
CK: MT

FILE:

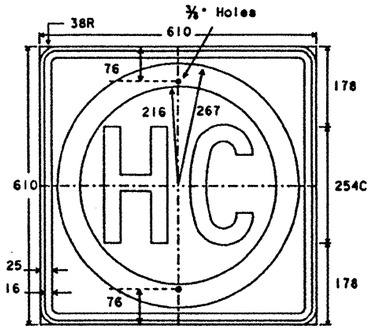

R14-2
610x610

Letters - Black
Border - Black
Ring - Green Reflective
Background - White Reflective

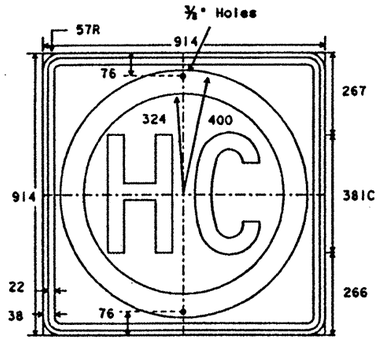

ER14-2
914x914

Letters - Black
Border - Black
Ring - Green Reflective
Background - White Reflective

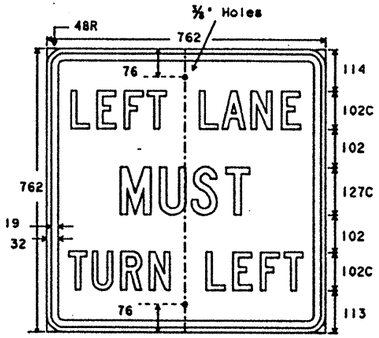

R3-7L
762x762

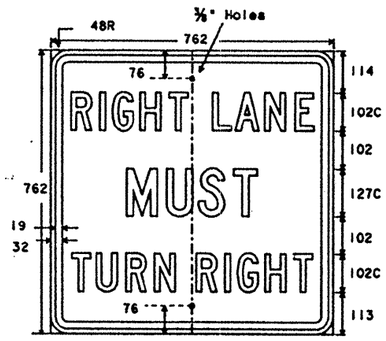

R3-7R
762x762

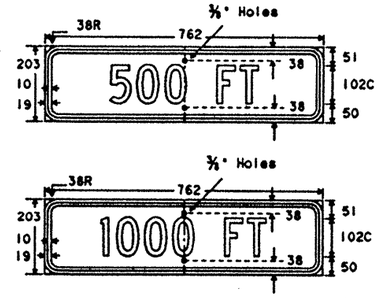

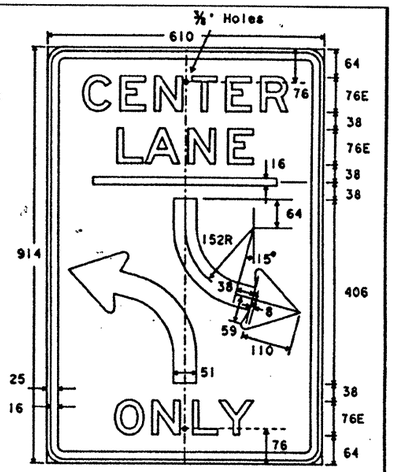

R3-9b
610x914

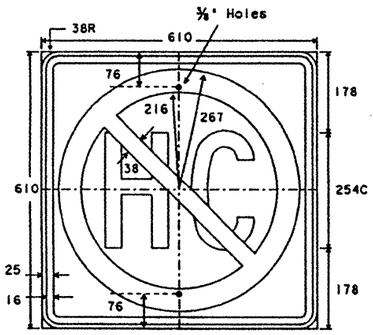

R14-3
610x610

Letters - Black
Border - Black
Ring/Slash - Red Reflective
Background - White Reflective

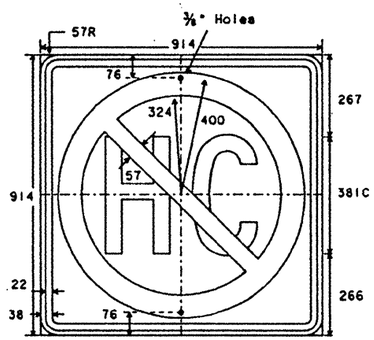

ER14-3
914x914

Letters - Black
Border - Black
Ring/Slash - Red Reflective
Background - White Reflective

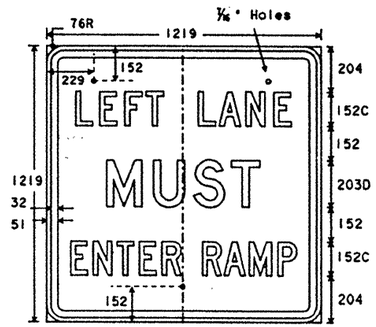

R3-20
1219x1219

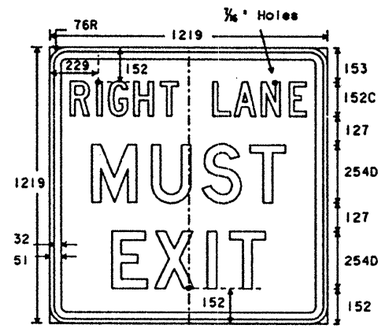

R3-21P
1219x1219

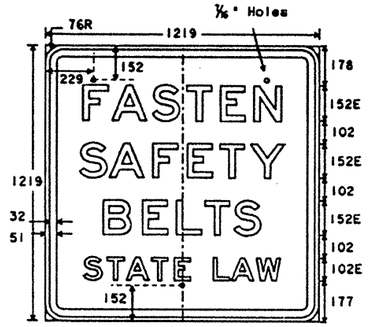

FR19-8
1219x1219

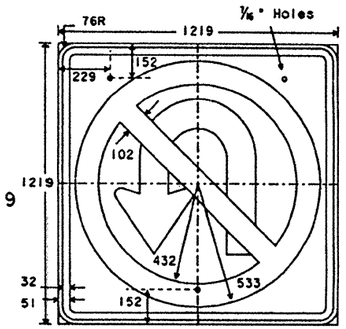

SR3-4
1219x1219

Letters - Black
Arrow - Black
Border - Black
Circle & Diagonal - Red Reflective
Background - White Reflective

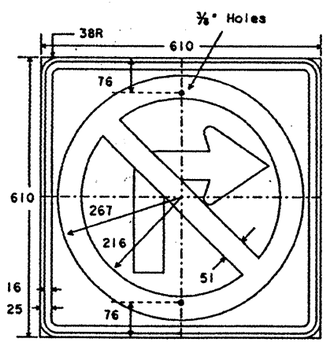

R3-1
610x610

Letters - Black
Arrow - Black
Border - Black
Circle & Diagonal - Red Reflective
Background - White Reflective

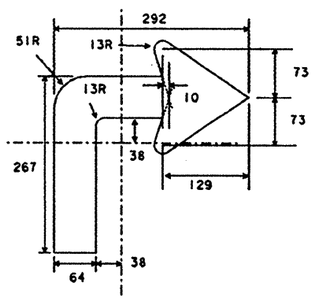

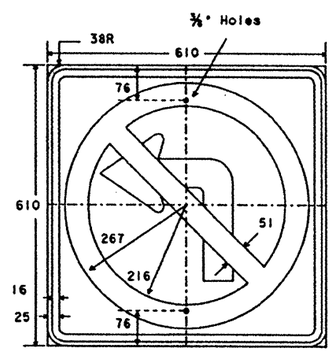

R3-2
610x610

Letters - Black
Arrow - Black
Border - Black
Circle & Diagonal - Red Reflective
Background - White Reflective

All dimensions are in millimeters unless otherwise noted.

The metric dimensions shown on this sheet have been rounded, and should be considered equivalent to the English dimensions in the "1980 Standard Highway Sign Designs for Texas" manual.

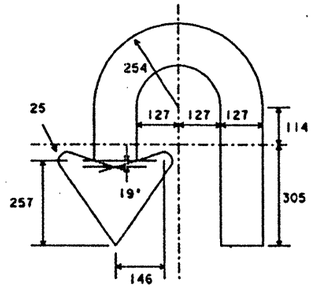

SPECIFICATION REFERENCE TABLE

MATERIALS AND TESTS DIVISION SPECIFICATIONS	
PLYWOOD SIGN BLANKS	D-9-7100
REFLECTIVE SHEETING,	
TYPE A (ENGINEER GRADE)	D-9-8300
TYPE C (HIGH SPECIFIC INTENSITY)	D-9-8300
VINYL NON-REFLECTIVE DECAL SHEETING	D-9-8320

GENERAL NOTES:

The alphabets and lateral spacing between letters and numerals shall conform with the Texas "Manual on Uniform Traffic Control Devices for Streets and Highways", latest edition, and any approved changes thereto. Lateral spacing of text shall provide a balanced appearance. All materials shall conform to Department Specifications.

Legend (except where noted), shall be applied by screening process of black and/or transparent colored ink, cut-out black vinyl non-reflective decal sheeting and/or reflective sheeting or combination thereof. Background shall be white reflective sheeting (Type A). R14-2, ER14-2, R14-3, ER14-3, R3-1, R3-2 and SR3-4 signs shall use reflective sheeting (Type C).

Sign blanks shall be one piece 16 mm thick plywood (Type A), unless otherwise noted elsewhere in the plans.

STANDARD PLANS
TEXAS DEPARTMENT OF TRANSPORTATION
Traffic Operations Division

REGULATORY SIGNS

R(3)-95(M)

©1995 DRAWN DATE: JULY 1990	DW: LR	CK:	DN: DN	CK:	FILE NO.:
REVISIONS 8-95	STATE DISTRICT: 15	FEDERAL REGION: 6	FEDERAL AID PROJECT: CD 242-1-35		SHEET: 328
COUNTY: BEXAR			CONTROL: 2552	SECTION: 01	JOB: 035
					HIGHWAY: LP1604

Metric 7C

DISCLAIMER
The use of this standard is governed by the "Texas Engineering Practice Act". No warranty of any kind is made by TxDOT for any purpose whatsoever. TxDOT assumes no responsibility for the conversion of this standard to other formats or for incorrect results or damages resulting from its use.

DW: UN
CK: MT

FILE:

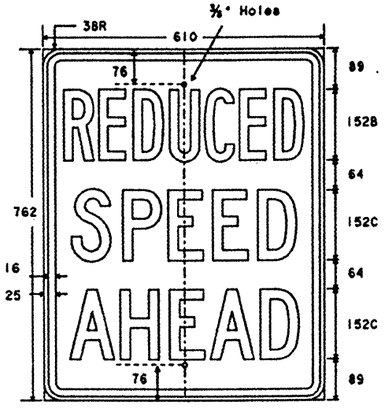

R2-5a
610x762

Legend - Black
Background - White Refl.

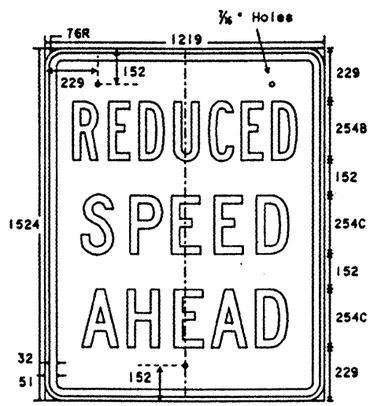

FR2-5a
1219x1524

Legend - Black
Background - White Refl.

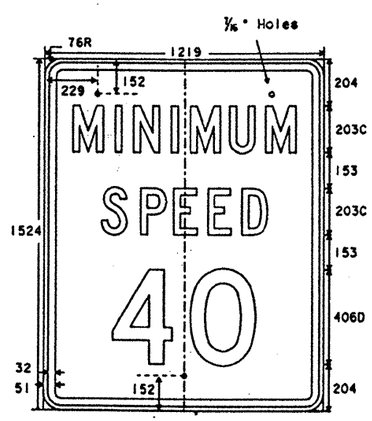

FR2-4
1219x1524

Legend - Black
Background - White Refl.

R2-4T
3505x1067

Legend - Black
Background - White Refl.

(For Non-Interstate Highways)

FR2-4T
6096x1981

Legend - Black
Background - White Refl.

(For Interstate Highways Only)

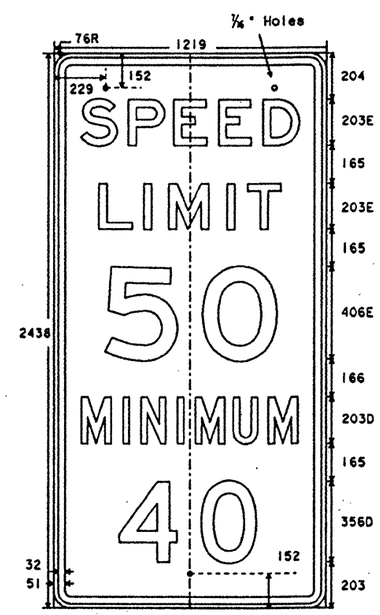

FR2-4a
1219x2438

Legend - Black
Background - White Refl.

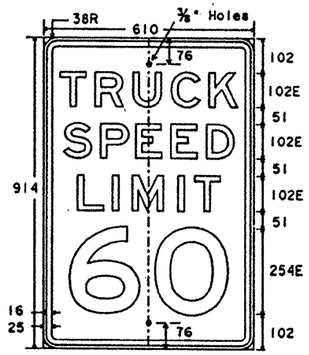

R2-2a
610x914

Legend - Black
Background - White Refl.

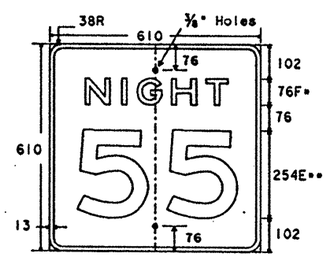

R2-3
610x610

Legend - White Refl.
Background - Black

** optionally space numerals about vertical centerline
* increase spacing 50%

All dimensions are in millimeters unless otherwise noted.

The metric dimensions shown on this sheet have been rounded, and should be considered equivalent to the English dimensions in the "1980 Standard Highway Sign Designs for Texas" manual.

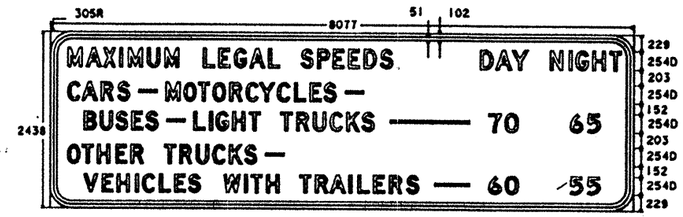

FR2-4Ta
8077x2438

Legend - Black
Background - White Refl.

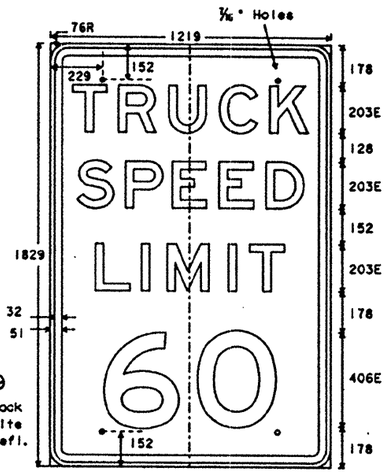

FR2-2a
1219x1829

Legend - Black
Background - White Refl.

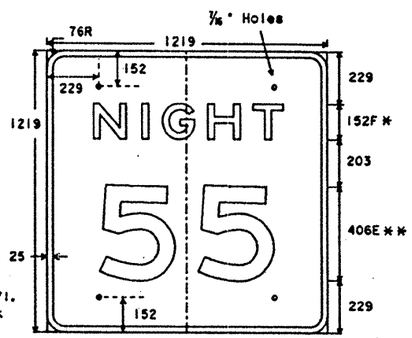

FR2-3
1219x1219

Legend - White Refl.
Background - Black

** optionally space numerals about vertical centerline
* increase spacing 50%

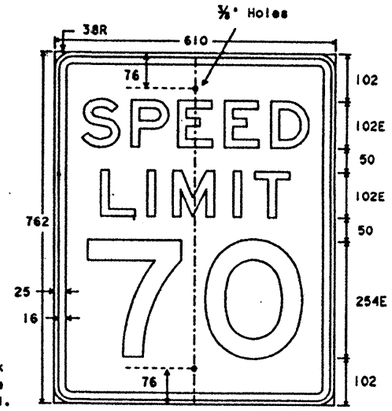

R2-1
610x762

Legend - Black
Background - White Refl.

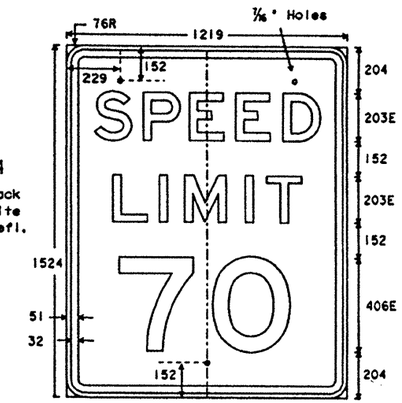

FR2-1
1219x1524

Legend - Black
Background - White Refl.

SPECIFICATION REFERENCE TABLE	
MATERIALS AND TESTS DIVISION SPECIFICATION	
PLYWOOD SIGN BLANKS	D-9-7110
REFLECTIVE SHEETING, TYPE A (ENGINEER GRADE)	D-9-8300
VINYL NON-REFLECTIVE DECAL SHEETING	D-9-8320

GENERAL NOTES:

The alphabets and lateral spacing between letters and numerals shall conform with the Texas "Manual on Uniform Traffic Control Devices for Streets and Highways", latest edition, and any approved changes thereto. Lateral spacing of text shall provide a balanced appearance. All materials shall conform to Department Specifications.

Legend (except where noted), shall be black and applied by screening process, cut-out vinyl non-reflective decal sheeting or combination thereof. Legend on FR2-3 shall be applied by reverse screening process, cut-out black vinyl non-reflective decal sheeting and/or cut-out white reflective sheeting or combination thereof. Background shall be reflective sheeting (Type A).

Sign blanks shall be one piece 16 mm thick plywood (Type A), unless otherwise noted elsewhere in the plans.

STANDARD PLANS
TEXAS DEPARTMENT OF TRANSPORTATION
Traffic Operations Division

REGULATORY SIGNS

R(4)-95A(M)

DATE DRAWN: August 1995	DR: LR	CK:	DN: DN	CK:	REV NO.
REVISIONS 12-95	STATE DISTRICT 15	FEDERAL REGION 6	FEDERAL AID PROJECT CD2452-1-35		SHEET 379
	COUNTY BEXAR		CONTROL 2452	SECTION 01	JOB 035
					HIGHWAY LP1604

Metric 7D

DISCLAIMER
The use of this standard is governed by the "Texas Engineering Practice Act". No warranty of any kind is made by TxDOT for any purpose whatsoever. TxDOT assumes no responsibility for the conversion of this standard to other formats or for incorrect results or damages resulting from its use.

DW: DN
CK: MT

FILE:

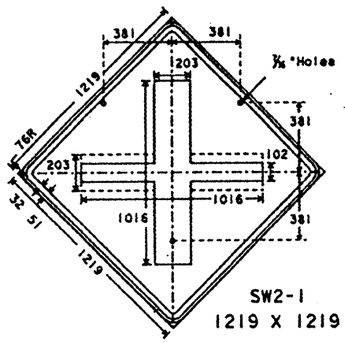

SW2-1
1219 X 1219

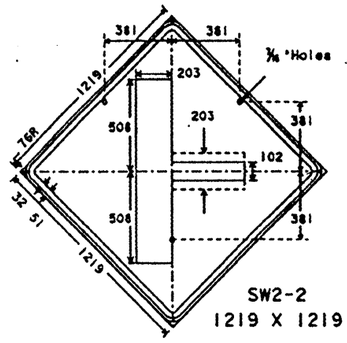

SW2-2
1219 X 1219

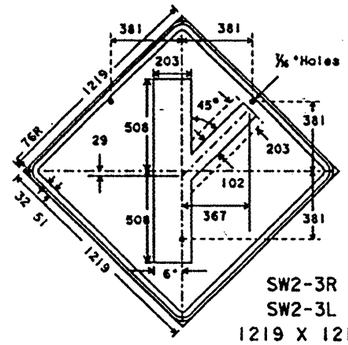

SW2-3R
SW2-3L
1219 X 1219

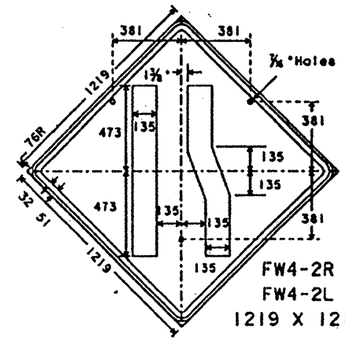

FW4-2R
FW4-2L
1219 X 1219

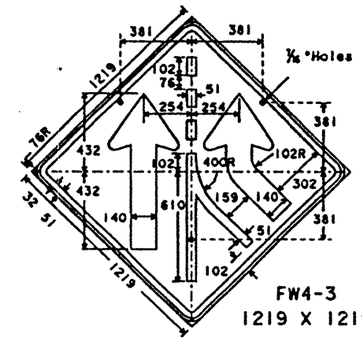

FW4-3
1219 X 1219

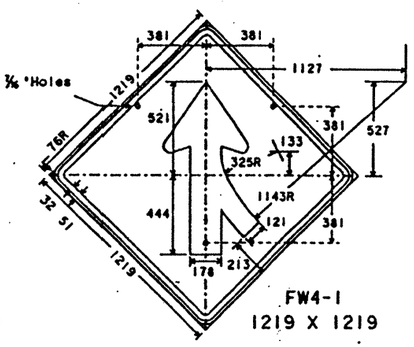

FW4-1
1219 X 1219

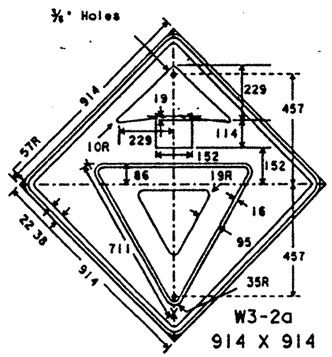

W3-2a
914 X 914

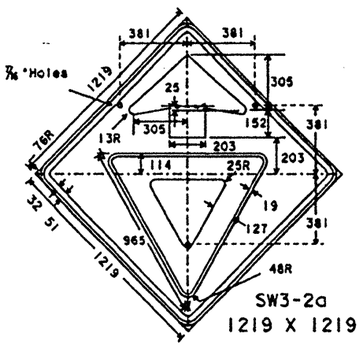

SW3-2a
1219 X 1219

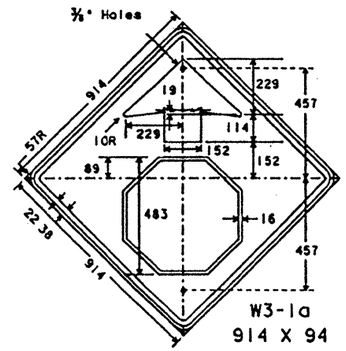

W3-1a
914 X 94

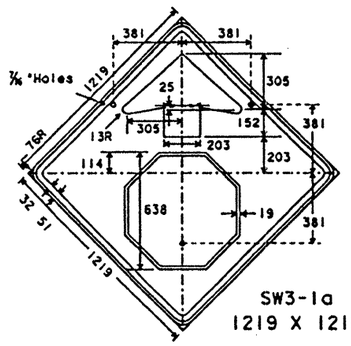

SW3-1a
1219 X 1219

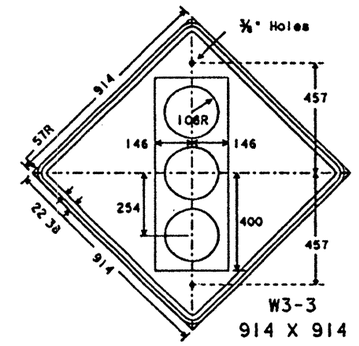

W3-3
914 X 914

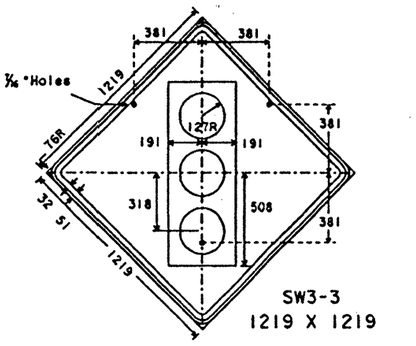

SW3-3
1219 X 1219

Border and Arrow - Black
Symbol - Red Border Band on White Background (Refl)
Background - Yellow Reflective

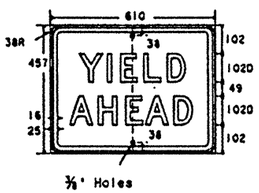

Border and Arrow - Black
Symbol - Red Border Band on White Background (Refl)
Background - Yellow Reflective

Border and Arrow - Black
Symbol - White Border on Red Background (Refl)
Background - Yellow Reflective

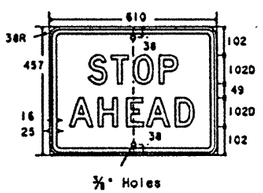

Border and Arrow - Black
Symbol - White Border on Red Background (Refl)
Background - Yellow Reflective

Symbol and Border - Black
Top Circle - Red Reflective
Bottom Circle - Green Reflective
Background - Yellow Reflective

Symbol and Border - Black
Top Circle - Red Reflective
Bottom Circle - Green Reflective
Background - Yellow Reflective

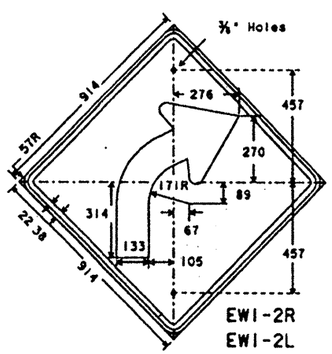

EW1-2R
EW1-2L
914 X 914

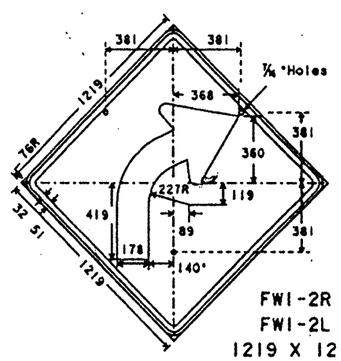

FW1-2R
FW1-2L
1219 X 1219

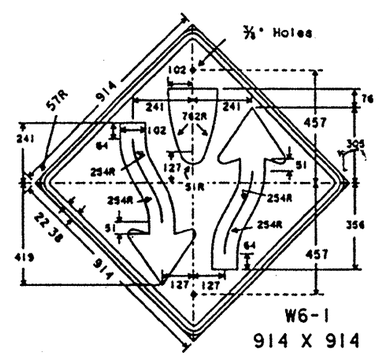

W6-1
914 X 914

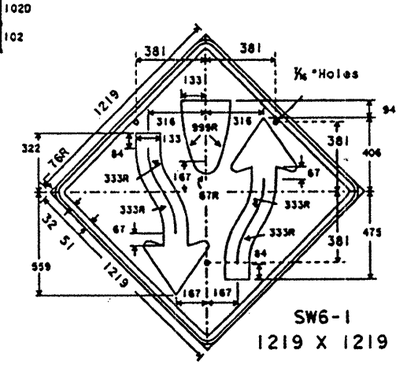

SW6-1
1219 X 1219

SPECIFICATION REFERENCE TABLE	
MATERIALS AND TESTS DIVISION SPECIFICATIONS	
PLYWOOD SIGN BLANKS	D-9-7100
REFLECTIVE SHEETING, TYPE C (HIGH SPECIFIC INTENSITY)	D-9-8300
VINYL NON-REFLECTIVE DECAL SHEETING	D-9-8320

GENERAL NOTES:

The alphabets and lateral spacing between letters and numerals shall conform with the Texas "Manual on Uniform Traffic Control Devices for Streets and Highways", latest edition, and any approved changes thereto. Lateral spacing of text shall provide a balanced appearance. All materials shall conform to Department Specifications.

Legend (except where noted), shall be applied by screening process of black and/or transparent colored ink, cut-out black vinyl non-reflective decal sheeting and/or reflective sheeting or combination thereof. Background shall be yellow reflective sheeting (Type C).

Sign blanks shall be one piece 16 mm thick plywood (Type A), unless otherwise noted elsewhere in the plans.

ARROWHEAD DETAILS

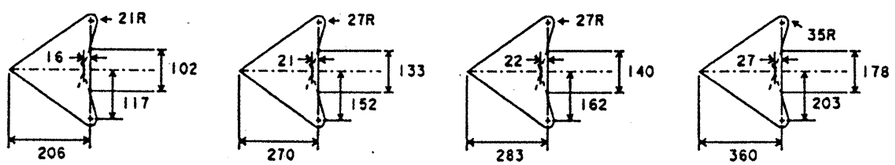

All dimensions are in millimeters unless otherwise noted.

The metric dimensions shown on this sheet have been rounded, and should be considered equivalent to the English dimensions in the "1980 Standard Highway Sign Designs for Texas" manual.

STANDARD PLANS
TEXAS DEPARTMENT OF TRANSPORTATION
Traffic Operations Division

WARNING SIGNS

W(1)-95(M)

1986 BRIDGE DATE: JAN. 1981	DN: LR	CK:	DW: DN	CK:	REV. NO.:
REVISIONS: 1-85, 7-90, 8-95	STATE IN SPECIFICATION	PERSONAL REVIEWED	FEDERAL AID PROJECT		SHEET 390
	15	6	CBZ452-1-35		
	COUNTY		CONTROL	SECTION	JOB

DISCLAIMER
The use of this standard is governed by the "Texas Engineering Practice Act". No warranty of any kind is made by TxDOT for any purpose whatsoever. TxDOT assumes no responsibility for the conversion of this standard to other formats or for incorrect results or damages resulting from its use.

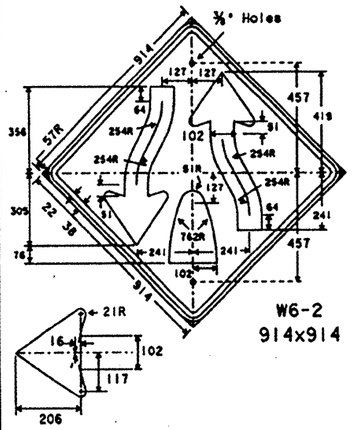

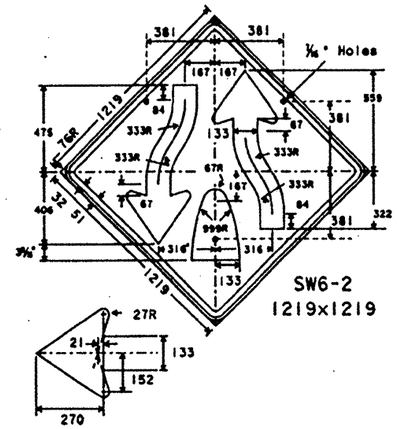

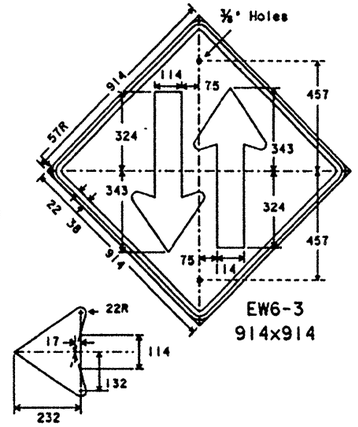

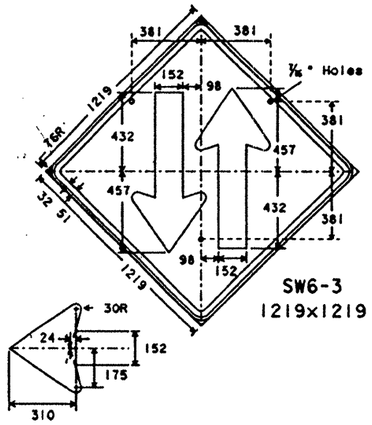

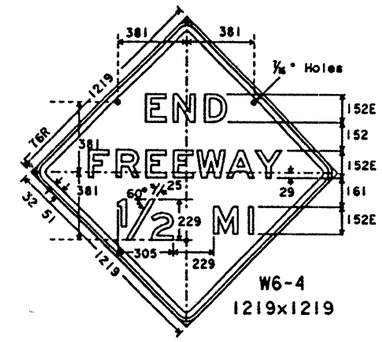

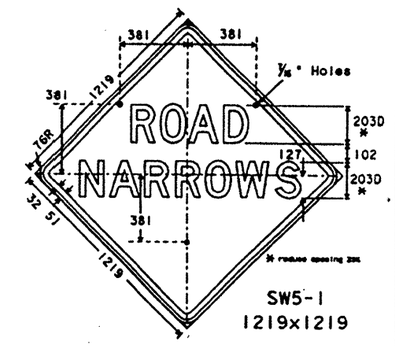

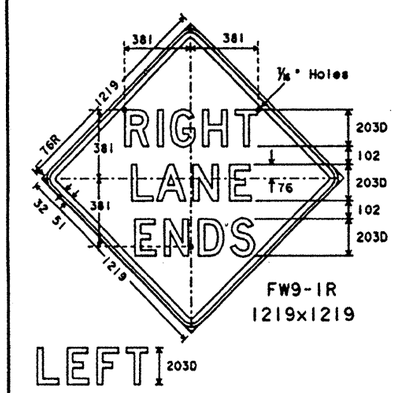

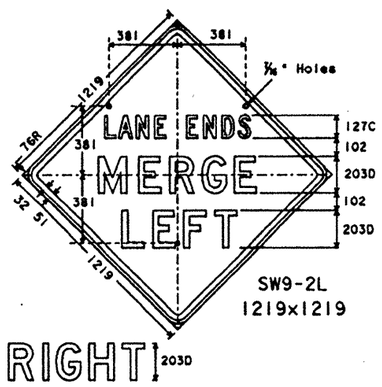

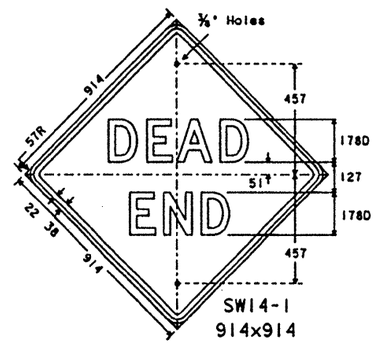

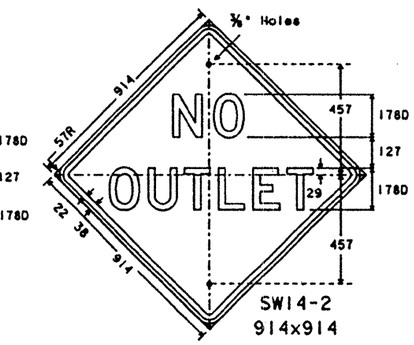

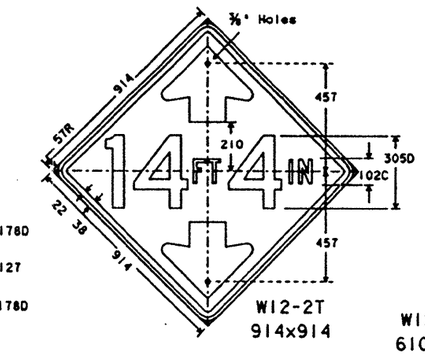

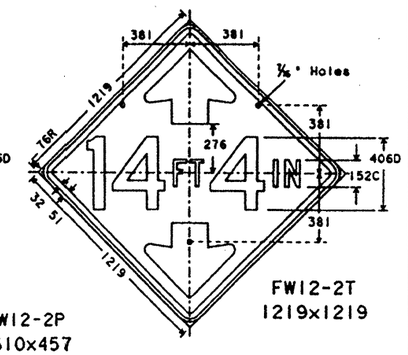

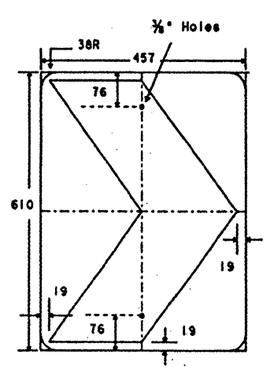

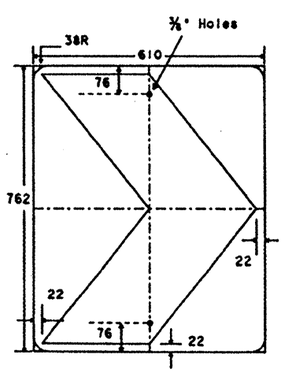

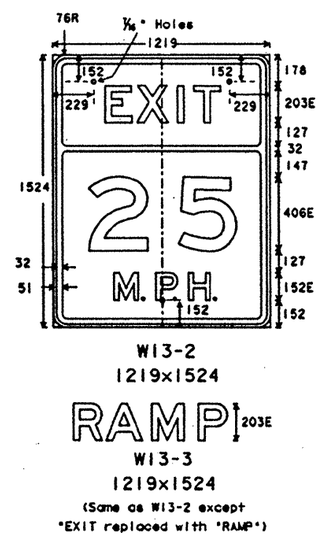

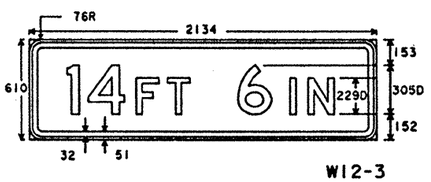

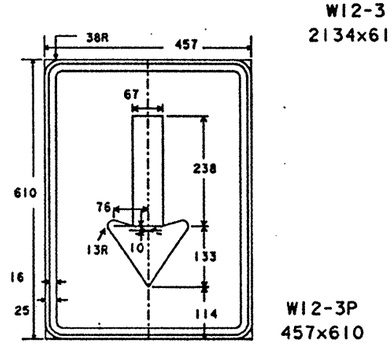

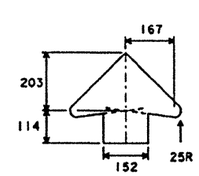

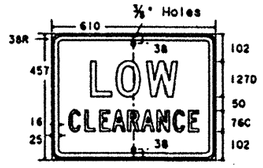

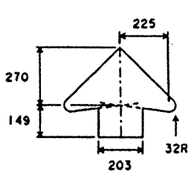

SPECIFICATION REFERENCE TABLE	
MATERIALS AND TESTS DIVISION SPECIFICATIONS	
PLYWOOD SIGN BLANKS	D-9-7100
REFLECTIVE SHEETING, TYPE C (HIGH SPECIFIC INTENSITY)	D-9-8300
VINYL NON-REFLECTIVE DECAL SHEETING	D-9-8320

GENERAL NOTES:

The alphabets and lateral spacing between letters and numerals shall conform with the Texas "Manual on Uniform Traffic Control Devices for Streets and Highways", latest edition, and any approved changes thereto. Lateral spacing of text shall provide a balanced appearance. All materials shall conform to Department Specifications.

Legend (except where noted), shall be black and applied by screening process, cut-out vinyl non-reflective decal sheeting or combination thereof. Background shall be yellow reflective sheeting (Type C).

Sign blanks shall be one piece 16 mm thick plywood (Type A), unless otherwise noted elsewhere in the plans.

All dimensions are in millimeters unless otherwise noted.

The metric dimensions shown on this sheet have been rounded, and should be considered equivalent to the English dimensions in the "1980 Standard Highway Sign Designs for Texas" manual.

STANDARD PLANS
TEXAS DEPARTMENT OF TRANSPORTATION
Traffic Operations Division

WARNING SIGNS

W(2)-95(M)

FILE: dc580504	CK: CW	DW: DN	CK: MT		
FILE: dc58npl					
ACC:					
FILE:					

8-95	1981	January	LR	DN	
REVISIONS					
1-82					
1-85					
7-90					
8-95					

STATE	DISTRICT	COUNTY	FEDERAL AID PROJECT	SHEET
15	6	BEXAR	CH 2452-1-35	381
			CONTROL 2452 SECTION 01 JOB 005	HIGHWAY 1/P1604

Metric 9B

DISCLAIMER
The use of this standard is governed by the "Texas Engineering Practice Act". No warranty of any kind is made by TxDOT for any purpose whatsoever. TxDOT assumes no responsibility for the conversion of this standard to other formats or for incorrect results or damages resulting from its use.

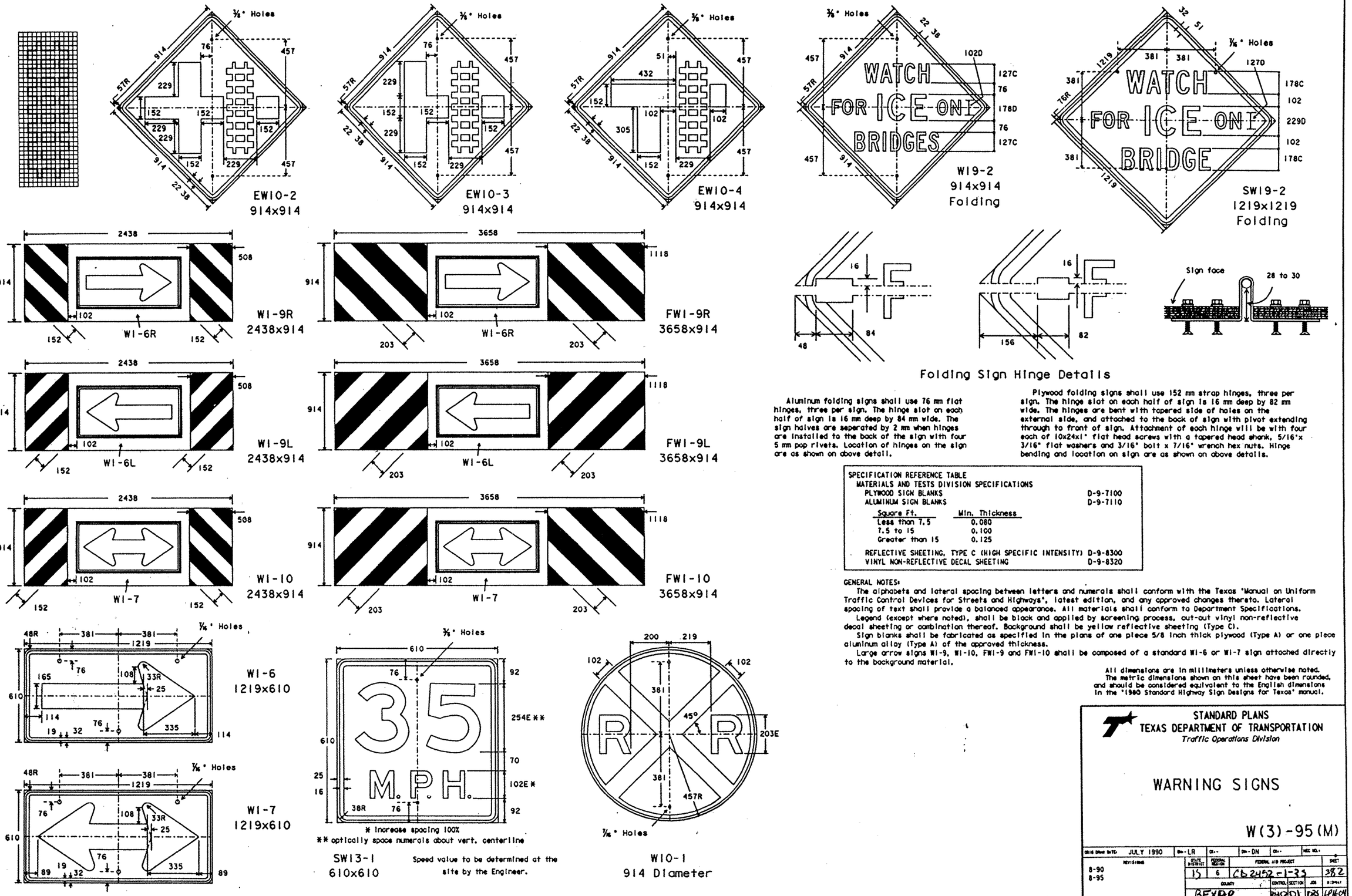

Aluminum folding signs shall use 76 mm flat hinges, three per sign. The hinge slot on each half of sign is 16 mm deep by 84 mm wide. The sign halves are seperated by 2 mm when hinges are installed to the back of the sign with four 5 mm pop rivets. Location of hinges on the sign are as shown on above detail.

Plywood folding signs shall use 152 mm strap hinges, three per sign. The hinge slot on each half of sign is 16 mm deep by 82 mm wide. The hinges are bent with tapered side of holes on the external side, and attached to the back of sign with pivot extending through to front of sign. Attachment of each hinge will be with four each of 10x24x1" flat head screws with a tapered head shank, 5/16"x 3/16" flat washers and 3/16" bolt x 7/16" wrench hex nuts. Hinge bending and location on sign are as shown on above details.

SPECIFICATION REFERENCE TABLE

MATERIALS AND TESTS DIVISION SPECIFICATIONS	
PLYWOOD SIGN BLANKS	D-9-7100
ALUMINUM SIGN BLANKS	D-9-7110

Square Ft.	Min. Thickness
Less than 7.5	0.080
7.5 to 15	0.100
Greater than 15	0.125

REFLECTIVE SHEETING, TYPE C (HIGH SPECIFIC INTENSITY)	D-9-8300
VINYL NON-REFLECTIVE DECAL SHEETING	D-9-8320

GENERAL NOTES:

The alphabets and lateral spacing between letters and numerals shall conform with the Texas 'Manual on Uniform Traffic Control Devices for Streets and Highways', latest edition, and any approved changes thereto. Lateral spacing of text shall provide a balanced appearance. All materials shall conform to Department Specifications.

Legend (except where noted), shall be black and applied by screening process, cut-out vinyl non-reflective decal sheeting or combination thereof. Background shall be yellow reflective sheeting (Type C).

Sign blanks shall be fabricated as specified in the plans of one piece 5/8 inch thick plywood (Type A) or one piece aluminum alloy (Type A) of the approved thickness.

Large arrow signs WI-9, WI-10, FWI-9 and FWI-10 shall be composed of a standard WI-6 or WI-7 sign attached directly to the background material.

All dimensions are in millimeters unless otherwise noted.
The metric dimensions shown on this sheet have been rounded, and should be considered equivalent to the English dimensions in the '1980 Standard Highway Sign Designs for Texas' manual.

* Increase spacing 100%
** optically space numerals about vert. centerline

Speed value to be determined at the site by the Engineer.

DISCLAIMER
The use of this standard is governed by the "Texas Engineering Practice Act". No warranty of any kind is made by TxDOT for any purpose whatsoever. TxDOT assumes no responsibility for the conversion of this standard to other formats or for incorrect results or damages resulting from its use.

STANDARD PLANS
TEXAS DEPARTMENT OF TRANSPORTATION
Traffic Operations Division

WARNING SIGNS

W(3)-95(M)

FILE: d0580504	DGN:	DN	CK:	MT			
©TxDOT JULY 1990	DN-LR	CK-	DW-DN	CK-			
REVISIONS 8-90 8-95	STATE DISTRICT 15	FEDERAL REGION 6	FEDERAL AID PROJECT CB 2452-1-33				SHEET 382
	COUNTY BEXAR		CONTROL 2452	SECTION 01	JOB 025		
							Metric 9C

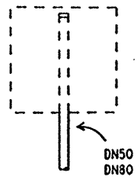

Type A

THIS TYPE PIPE MOUNT OR YELLOW FIBERGLASS REINFORCED PLASTIC (FRP) SUPPORT MAY BE USED FOR ANY SIGN OR COMBINATION OF SIGNS WITH THE SIGN AREAS INDICATED BELOW, EXCEPT FR6-1 AND W1-6 SIGNS (SEE TYPE D-1):
MAX. OF 0.93 sq. m. FOR DN50 PIPE MOUNT
MAX. OF 1.5 sq. m. FOR DN80 FRP MOUNT
THE AREA OF THE REGULATORY OR WARNING SIGN SUPPLEMENTARY PLAQUES SHALL NOT BE USED IN DETERMINING THE ABOVE SIGN AREA.

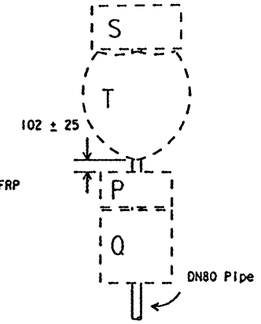

Type A-1

THIS TYPE PIPE MOUNT TO BE USED FOR A 914 OR 1143 mm INTERSTATE ROUTE MARKER WITH A 610 OR 762 mm ROUTE MARKER ON MAIN LANES OR AS A SPECIFIED OPTIONAL SUBSTITUTE FOR TYPE B.

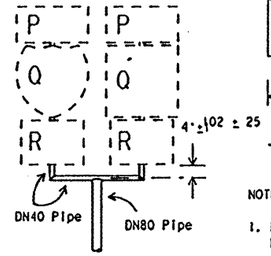

Type B

THIS TYPE PIPE MOUNT TO BE USED WITH 2 ROUTE MARKER ASSEMBLIES.

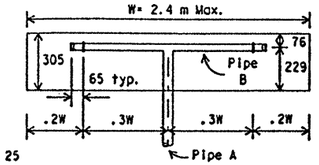

Type D-1

A=DN50 B=DN40

NOTE: (FOR TYPE D-1)

1. FOR "ONE WAY" SIGNS (FR6-1, 1219x406), MOUNTING CLAMPS ARE SPACED 711 mm APART. THE TOP OF SIGN IS 203 mm ABOVE CENTERLINE OF PIPE B.
2. FOR "LARGE ARROW" SIGN (W1-6, 1219x610), MOUNTING CLAMPS ARE SPACED 762 mm APART.

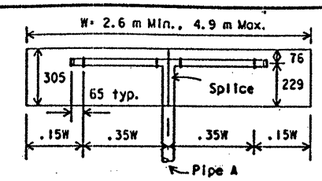

Type D-3

A=DN65 B=DN40

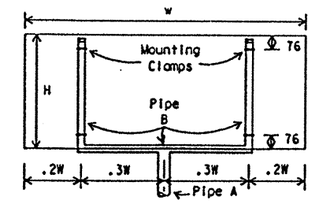

Type D-2

A=DN65 B=DN40

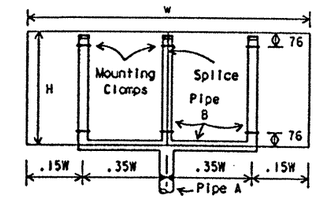

Type D-4

A=DN80 B=DN50

MOUNT TYPE	H	W Min	W Max
D-2	610 mm	n/a	2.4 m
	762 mm	n/a	2.0 m
	914 mm	n/a	1.7 m
D-4	610 mm	2.6 m	3.8 m
	762 mm	2.4 m	3.2 m
	914 mm	1.8 m	2.4 m
D-6	610 mm	4.0 m	4.1 m
	762 mm	3.0 m	3.4 m
	914 mm	2.6 m	2.7 m

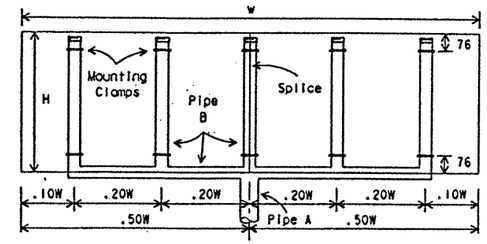

Type D-6

A=DN80 B=DN50

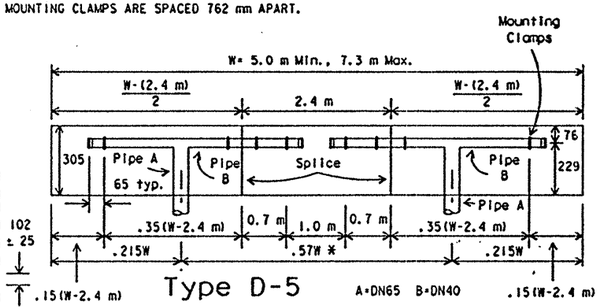

Type D-5

A=DN65 B=DN40

* POST SPACING MAY VARY ± 5% OF TOTAL SIGN WIDTH TO FIT FIELD CONDITIONS.

NOTES: (FOR TYPES D-1 THROUGH D-6)

1. SPLICE PLATES REQUIRED AT SPLICE POINTS.
2. THE SIGN BLANKS SHALL BE 16 mm THICK PLYWOOD CONFORMING WITH DEPARTMENTAL MATERIAL SPECIFICATION D-9-7100, UNLESS OTHERWISE NOTED ELSEWHERE IN THE PLANS.

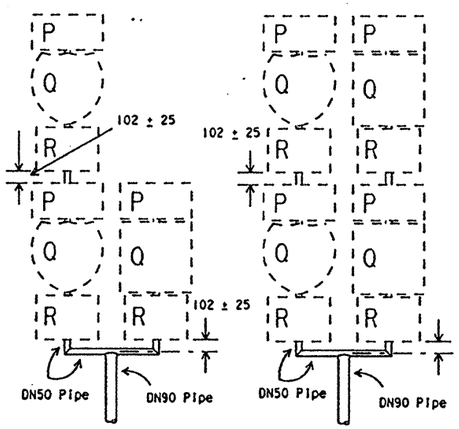

Type C

THIS TYPE PIPE MOUNT TO BE USED:

1. WHEN 3 OR 4 ROUTE MARKERS ARE REQUIRED, OR
2. FOR A 914 OR 1143 mm INTERSTATE ROUTE MARKER WITH TWO OR THREE 610 AND/OR 762 mm ROUTE MARKERS.

P = 610x305 Cardinal Direction Marker
Q_1 = 610x610 Interstate, US or State Route Marker
Q_2 = 762x610 Interstate or US Route Marker
R = 533x381 Direction Arrow
S = 762x381 Cardinal Direction Marker
T_1 = 914x914 (2) digit Interstate Route Marker
T_2 = 1143x914 (3) digit Interstate Route Marker

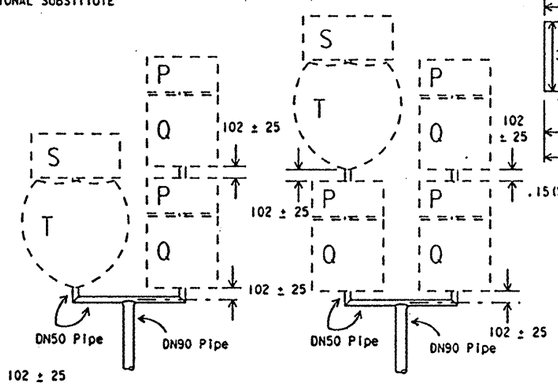

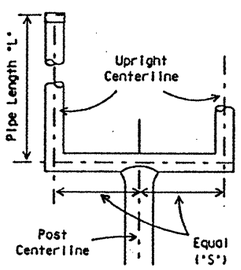

See table at right for values of "L"

Marker Combinations	"L"
2P+2Q+2R+7"	2.77 m
P+2Q+2R+7"	2.46 m
2Q+2P+7"	2.00 m
Q+R+3"	1.06 m
S+T+3"	1.37 m
P+Q+R+3"	1.37 m
P+Q+S+T+7"	2.38 m

DIMENSION "S"

DIMENSION "S" EQUALS THE DISTANCE FROM THE CENTERLINE OF UPRIGHT TO THE CENTERLINE OF CLEARANCE BETWEEN SIGN GROUP.

"S" = 419 mm for Q_1
"S" = 495 mm for Q_2

"S" = 572 mm for T_1
"S" = 686 mm for T_2

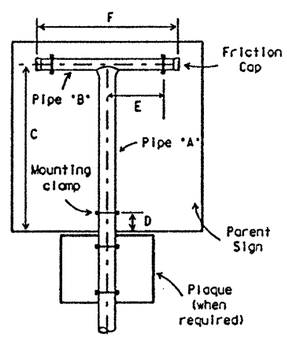

Type F Mount

Type of Sign		Pipe "A"	Pipe "B"	C	D	E	F	
Regulatory Signs	SR1-1	DN80	DN50	991	229	381	889	
	FR1-2	DN80	DN50	1092	533	279	686	
	914x1219	DN80	DN50	1067	152	305	737	
	1219x914	DN80	DN50	762	152	381	889	
	1219x1219	DN80	DN50	1067	152	381	889	1 2
	1219x1524	DN80	DN50	1372	152	381	889	2
Warning Signs	1219x1219	DN80	DN50	1213	451	381	889	1
	1219x1524	DN80	DN50	1372	152	381	889	
School Signs	SS1-1	DN80	DN50	762	152	305	762	3
	SS2-1	DN80	DN50	762	152	305	762	3

GENERAL NOTES FOR SIGN SUPPORT TYPES A, B, C, D AND F

1. TYPE A SUPPORT SHALL BE PIPE OR YELLOW FRP. FRP MOUNTS SHALL MEET DEPARTMENT SPECIFICATION D-9-4410.
2. PIPE COLLAR COUPLING SHALL BE USED FOR ALL SIGNS SUPPORTED ON DN50 AND DN65 PIPE POSTS.
3. TRIANGULAR SLIP BASE SHALL BE USED FOR SIGNS SUPPORTED ON DN80 AND DN90 PIPE POSTS.
4. MOUNTING CLAMP, VERTICAL CLEARANCE AND LATERAL CLEARANCE DETAILS ARE SHOWN ON STANDARD SMD(I-2)(M).
5. WELDED PIPE MOUNT, FRICTION CAP, PIPE COLLAR COUPLING, TRIANGULAR SLIP BASE, UNIVERSAL ANCHOR SYSTEM AND FOUNDATION STANDARD SMD(I-3)(M) AND SMD(I-4)(M).

SIGN SUPPORTS SHALL NOT BE SPLICED EXCEPT AS SHOWN ELSEWHERE ON SMD STANDARDS

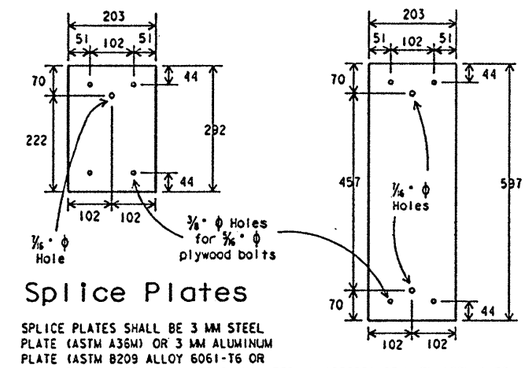

Splice Plates

SPLICE PLATES SHALL BE 3 MM STEEL PLATE (ASTM A36M) OR 3 MM ALUMINUM PLATE (ASTM B209 ALLOY 6061-T6 OR 5052-H38). STEEL SHALL BE GALVANIZED IN ACCORDANCE WITH ASTM A123.

1. INCLUDES PARENT SIGNS OF THIS SIZE WHICH HAVE SUPPLEMENTARY PLAQUE. EXAMPLE: WHEN "DO NOT ENTER" SIGN (SR5-1, 1219x1219) IS MOUNTED IN COMBINATION WITH THE "RAMP" PLAQUE (R5-1T, 1219x457), THE "DO NOT ENTER" IS MOUNTED AS A 1219x1219 REGULATORY SIGN AND THE "RAMP" IS MOUNTED AS A PLAQUE.

2. SPEED LIMIT SIGNS FR2-2, FR2-3 AND FR2-4 ARE MOUNTED ONLY IN COMBINATION WITH "SPEED LIMIT" FR2-1 ON TYPE G MOUNT. "TRUCK SPEED LIMIT" SIGN (FR2-2A, 1219x1829) IS TO BE MOUNTED INDEPENDENTLY ON TYPE G MOUNT, SEE STANDARD SMD (TY G) FOR DETAILS. WHEN "WRONG WAY" SIGN (SR5-1A, 1219x914) IS MOUNTED IN COMBINATION WITH "DO NOT ENTER" SIGN (SR5-1, 1219x1219), TYPE G MOUNT IS USED.

3. SCHOOL ADVANCE (SS1-1, 1219x1219) AND SCHOOL CROSSING (SS2-1, 1219x1219) SYMBOL SIGNS SHALL BE MOUNTED ON A TYPE F MOUNT.

All dimensions are in millimeters unless otherwise noted.

STANDARD PLANS
TEXAS DEPARTMENT OF TRANSPORTATION
Traffic Operations Division

SIGN MOUNTING DETAILS-SMALL ROADSIDE SIGNS

SMD(I-1)-97(M)

ORIG. DRAW DATE: August 1995 | DN: LR | CK: | DN: DN | CK: MT | REC. NO.:
REVISIONS: 1-97
STATE DISTRICT: 16 | FEDERAL REGION: 6 | FEDERAL AID PROJECT: CD2452-1-38 | SHEET: 383
COUNTY | CONTROL | SECTION | JOB | HIGHWAY

DISCLAIMER
The use of this standard is governed by the "Texas Engineering Practice Act". No warranty of any kind is made by TxDOT for any purpose whatsoever. TxDOT assumes no responsibility for the conversion of this standard to other formats or for incorrect results or damages resulting from its use.

DN: CK: DW: CK:
DATE: FILE:
ACC:
LEVEL: DISP

DISCLAIMER
The use of this standard is governed by the "Texas Engineering Practice Act". No warranty of any kind is made by TxDOT for any purpose whatsoever. TxDOT assumes no responsibility for the conversion of this standard to other formats or for incorrect results or damages resulting from its use.

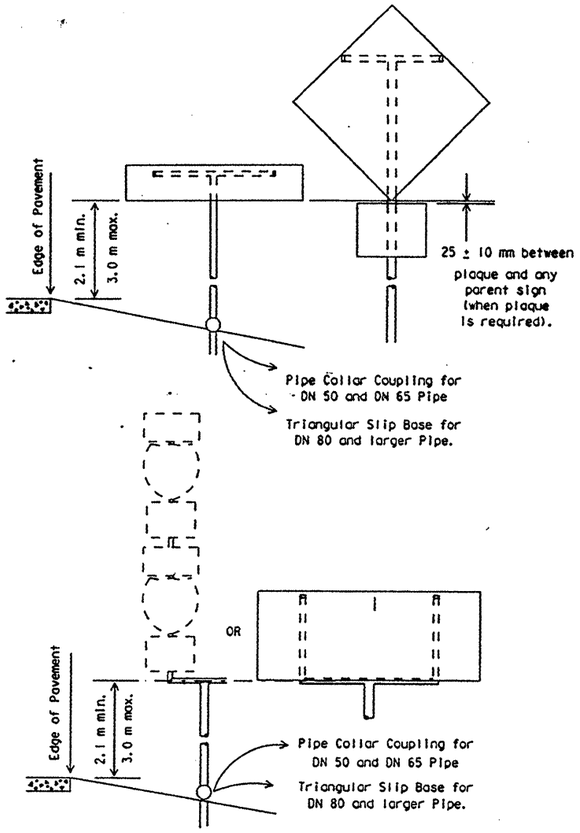

VERTICAL CLEARANCE OF SMALL SIGNS ALL TYPES OF ROADWAYS

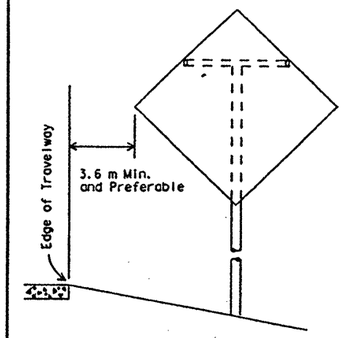

Rural Conventional Highway without shoulder.

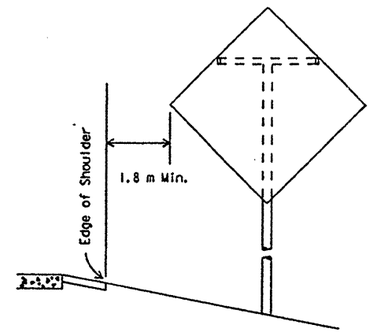

Rural Conventional Highway with shoulder.

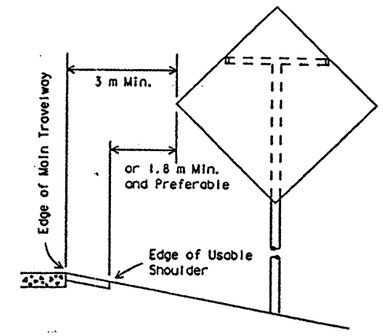

Expressways or Freeways without curb or with mountable curb.

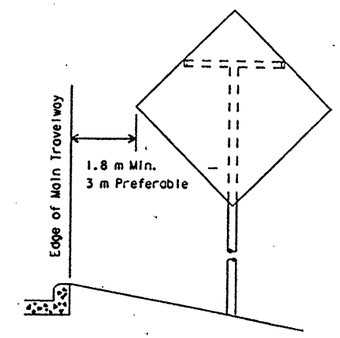

Expressways or Freeways with unmountable curb.

LATERAL CLEARANCE OF SMALL SIGNS TO THE RIGHT OR LEFT SIDE OF ROADWAY

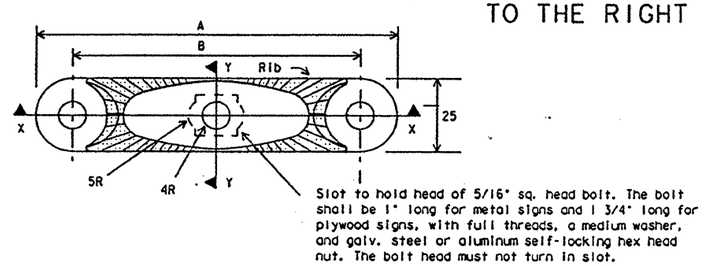

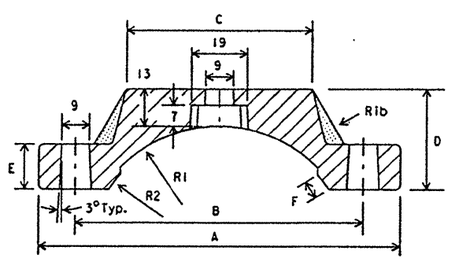

Section X-X

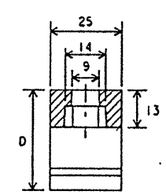

Section Y-Y

Pipe Clamp Casting

Pipe clamp casting shall be ASTM B26 or B108 aluminum alloy A444.0-T4 or 356.0-F.

All sign mounting clamp parts not made from aluminum shall be galvanized steel in conformance with ASTM A153 Class A or stainless steel.

All dimensions have been rounded. The metric dimensions indicated should be considered equivalent to the English dimensioned clamp.

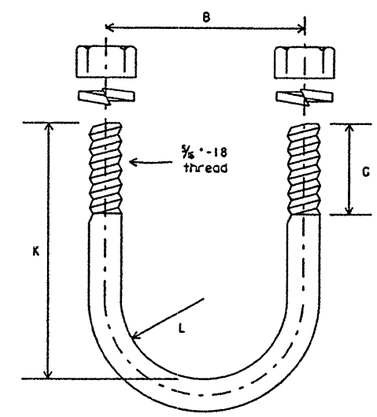

U-Bolt

U-Bolt to be made in accordance with standard manufacturing procedure. 9/32" dia. stock is permissible. American standard regular semi-finished hex. nuts and spring lockwashers.

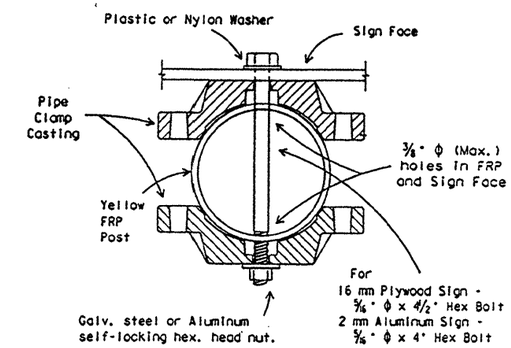

NOTE: Type A support shall be pipe or Yellow FRP. FRP mounts shall meet Departmental Material Specification D-9-4410.

Typical Detail
Yellow Fiberglass Reinforced Plastic (FRP) Mounting

GENERAL NOTES:

1. All clearances apply to both rural and urban locations, except as noted.
2. Where physical features of the roadway will permit, maximum lateral clearances are desirable. For frontage roads, ramps and other connecting roadways, lesser clearances may be used, but generally no less than 1.8 meters is recommended between the edge of the travelway and the edge of the sign. At intersections, signs should be positioned in the optimum location for viewing by traffic.
3. Where necessary, the minimum allowable clearance of .6 meter may be used in urban locations on conventional highways.
4. Where a sign is to be located behind guardrail, the allowable minimum clearance may be used, measured from the face of the guardrail to the near edge of the sign.
5. Lateral clearances of signs mounted on left side of roadway are the same as shown above where space will permit.

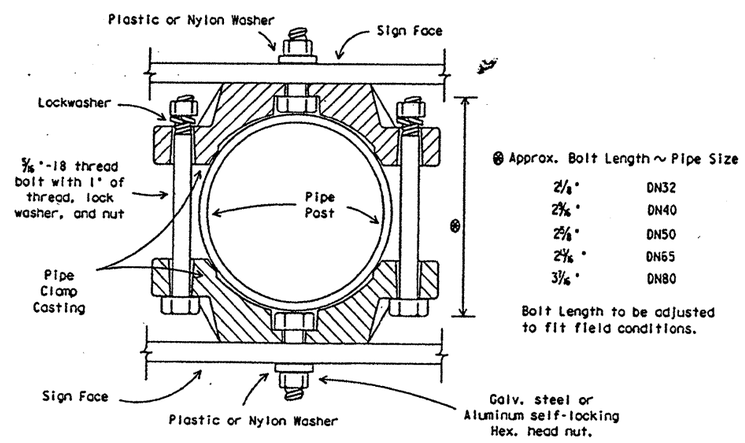

⊗ Approx. Bolt Length ~ Pipe Size

2 1/8"	DN32
2 5/8"	DN40
2 5/8"	DN50
2 1/8"	DN65
3 1/8"	DN80

Bolt Length to be adjusted to fit field conditions.

Typical Detail
Back to Back Mounting of Signs

Dimensions for Mounting Clamp

Standard Pipe Size	A	B	C	D	E	F	G	K	L	R1	R2
DN32	78	53	19	24	11	5	16	54	21	23	21
DN40	83	58	25	27	11	5	16	62	25	25	24
DN50	95	70	38	29	13	5	25	68	31	32	30
DN65	108	82	51	32	13	6	25	81	37	38	36
DN80	124	98	64	35	16	6	25	97	45	46	44

All dimensions shown in chart are in millimeters.

MOUNTING CLAMP DETAILS

All dimensions on this sheet are in millimeters unless otherwise noted.

STANDARD PLANS
TEXAS DEPARTMENT OF TRANSPORTATION
Traffic Operations Division

SIGN MOUNTING DETAILS-SMALL ROADSIDE SIGNS

SMD(1-2)-97(M)

ORIG. DRAW. DATE: August 1995	DW: LR	CK:	DN: DN	CK: MT	HEC NO.:
REVISIONS 1-97	STATE DISTRICT 5	FEDERAL REGION 6	FEDERAL AID PROJECT (D)2452-1-35		SHEET 384
	STATE DISTRICT NAME: COUNTY BEXAR		CONTROL 2452	SECTION 01	JOB 03 HIGHWAY LP410

LEVELS OF VD	DATE:
1 2 3 4 5 6 7 8 9 10 11 12 13 14 15 16	ACC:
17 18 19 20 21 22 23 24 25 26 27 28 29 30 31 32	FILE:
33 34 35 36 37 38 39 40 41 42 43 44 45 46 47 48	
49 50 51 52 53 54 55 56 57 58 59 60 61 62 63	

DN: CK: DW: CK:

DISCLAIMER
The use of this standard is governed by the "Texas Engineering Practice Act". No warranty of any kind is made by TxDOT for any purpose whatsoever. TxDOT assumes no responsibility for the conversion of this standard to other formats or for incorrect results or damages resulting from its use.

TRIANGULAR SLIP BASE DETAILS

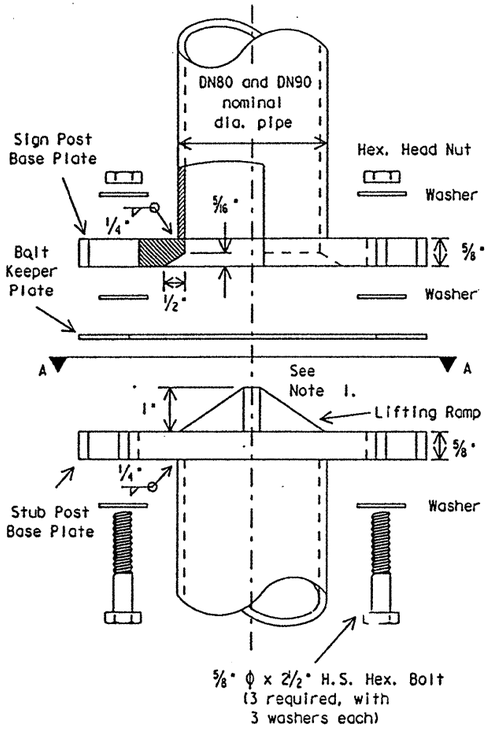

SIGN POST & STUB POST ELEVATION

TRIANGULAR SLIP BASE NOTES:

1. The lifting device may consist of welded ramps or a conical shape formed into the center of the Stub Post Base Plate.
2. The Sign Post Base Plate of the Triangular Slip Base shall have the same exterior dimensions as the bottom plate. The lifting device shall be a part of the Stub Post Base Plate only. A hole equal to the inside diameter of the Sign Post shall be cut through the center of the Sign Post Base Plate with the hole edge beveled as detailed.
3. The Base Plates and lifting device shall conform with the requirements of ASTM A36 or A572 Grade 50.
4. All structural steel shall be galvanized in accordance with ASTM A123. The entire support shall be galvanized from the top down to a minimum depth of 150 mm into the foundation. All nuts, bolts and washers shall be galvanized in accordance with ASTM Designation: B695 Class 50 or A153 Class C or D.
5. All high strength bolts shall conform to ASTM A325 (ASTM A449 may be substituted for ASTM A325 provided proper bolt head, nut and/or washer clearances are maintained).
6. Nuts shall conform to ASTM A194 or A563, and washers shall conform to ASTM F436.

BOLTING PROCEDURE FOR ASSEMBLY OF BASE CONNECTION:

1. Assemble Sign Post, Bolt Keeper Plate and Stub Post with bolts and three flat washers per bolt as shown.
2. Shim as required to plumb post.
3. Tighten all bolts the maximum possible with a 12 to 15 inch wrench to clean bolt threads and to bed washers and shims.
4. Loosen each bolt in sequence and retighten bolts in a systematic order to the prescribed torque of 440 to 450 inch pounds or 36 to 38 foot pounds. DO NOT OVERTIGHTEN.
5. To prevent nut loosening, burr threads of bolt at junction with nut using a center punch.

The bevel end shall be tangent to the bolt hole. Any misalignment shall be corrected by grinding. Face of bevel shall be finished to a minimum smoothness of f=500.

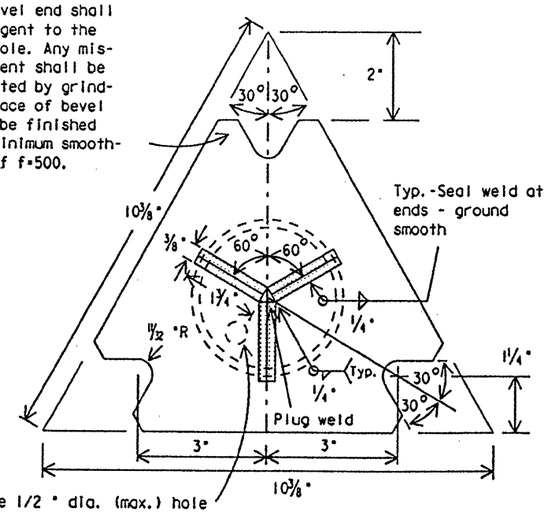

Provide 1/2" dia. (max.) hole in the Stub Post Base Plate within the inside radius of the stub post for galvanized drainage.

VIEW A-A

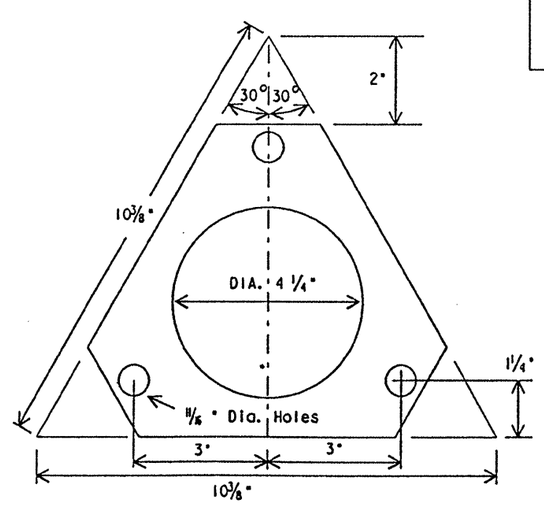

BOLT KEEPER PLATE

Bolt Keeper Plate shall be 0.3 mm (30 gauge) galvanized steel.

WELDED PIPE MOUNT DETAILS

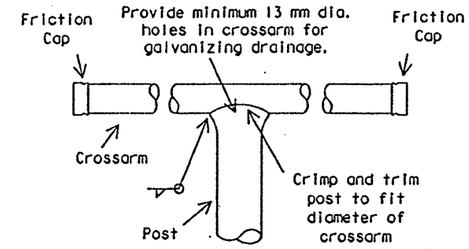

TEE MOUNT SUPPORT

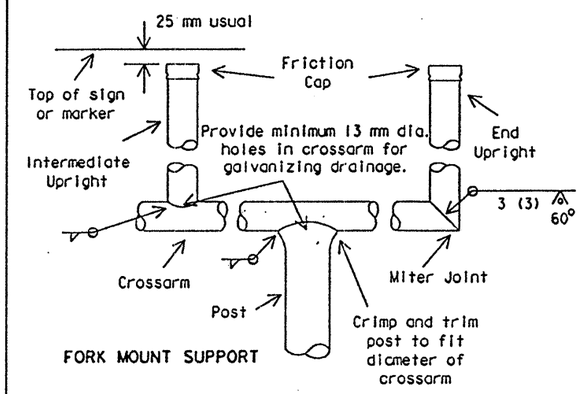

FORK MOUNT SUPPORT

The contractor may furnish standard weight pipe conforming to ASTM Specification A53 Grade B, A501 or any other standard weight steel pipe. Pipe material shall have a yield strength of 240 MPa and a minimum elongation of 15 percent in 50 mm. Pipe shall have outside diameters and wall thicknesses which are equivalent to or better than those specified hereon.

All pipes to be welded shall be of weldable quality.

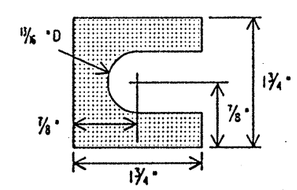

SHIM

Furnish two .012"+ thick and two .032"+ thick shims per post. Shims shall be fabricated from brass shim stock or strip conforming to ASTM B36.

FRICTION CAP DETAIL

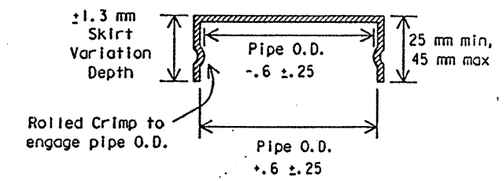

Friction caps may be manufactured from hot rolled or cold rolled steel sheets. The minimum sheet metal thickness shall be 0.61 mm (24 guage) for cap sizes.

The rim edges shall be reasonably straight and smooth. Caps shall be sized and formed in such a manner as to produce a drive-on friction fit and have no tendency to rock when seated on the pipe. The depth shall be sufficient to give positive protection against entrance of rainwater. They shall be free of sharp creases or indentations and show no evidence of metal fracture.

Caps shall have an electrodeposited coating of zinc in accordance with the requirements of ASTM B633 Class FE/ZN 8.

GENERAL NOTES:

Support and design shall conform with AASHTO Standard Specifications for structural supports of Highway signs, luminaires and traffic signals with a design wind speed of 60 mph.

Steel pipe shall be galvanized in accordance to ASTM Designation A123.

All dimensions are in millimeters unless otherwise noted.

STANDARD PLANS
TEXAS DEPARTMENT OF TRANSPORTATION
Traffic Operations Division

SIGN MOUNTING DETAILS- SMALL ROADSIDE SIGNS

SMD(1-3)-97(M)

DFGS GRAD DATE: August 1995	DN: LR	CK:	DW: DN	CK: NT	REV NO.:
REVISIONS 1-96 1-97	STATE DISTRICT 15	FEDERAL REGION 6	FEDERAL AID PROJECT CB 242-1-35		SHEET 385
	COUNTY BEXAR		CONTROL 2452	SECTION 01	JOB 035

DN: CK: DW: CK:

DATE: FILE:

DISCLAIMER
The use of this standard is governed by the "Texas Engineering Practice Act". No warranty of any kind is made by TxDOT for any purpose whatsoever. TxDOT assumes no responsibility for the conversion of this standard to other formats or for incorrect results or damages resulting from its use.

FIBERGLASS REINFORCED PLASTIC ANCHOR (FRP)

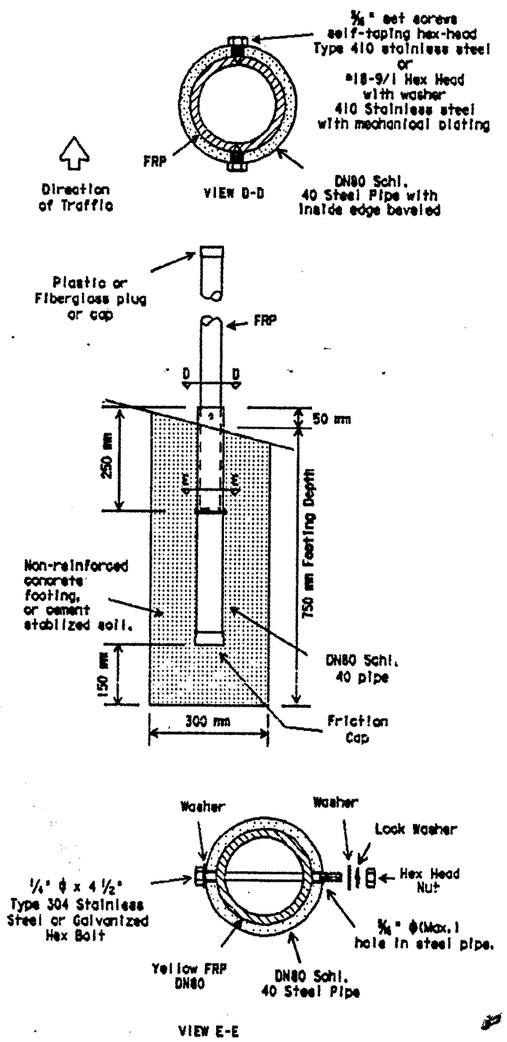

May be used as Type A Mount

UNIVERSAL ANCHOR SYSTEM

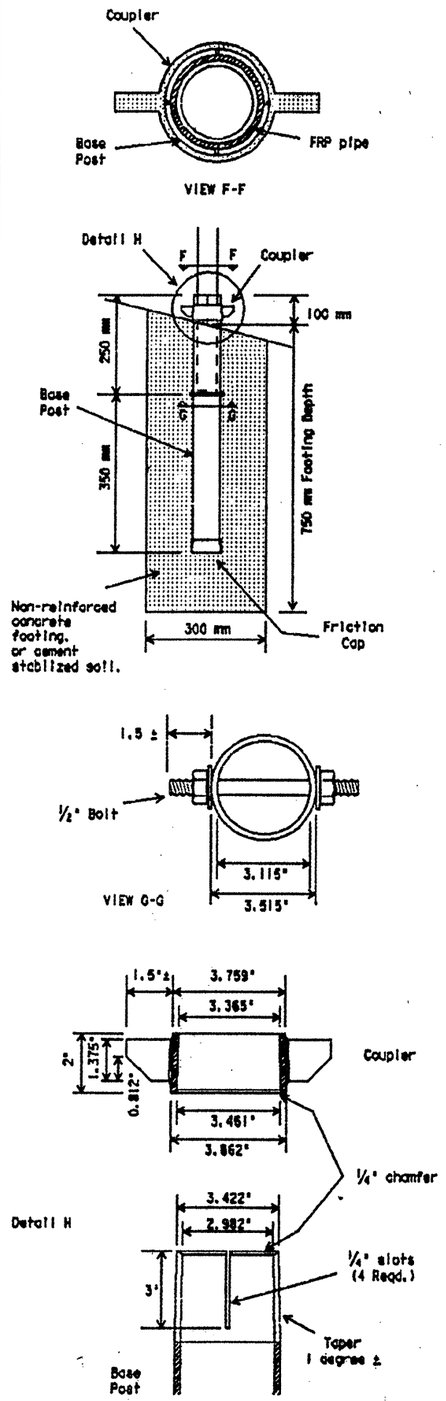

BREAKAWAY PIPE COLLAR COUPLING

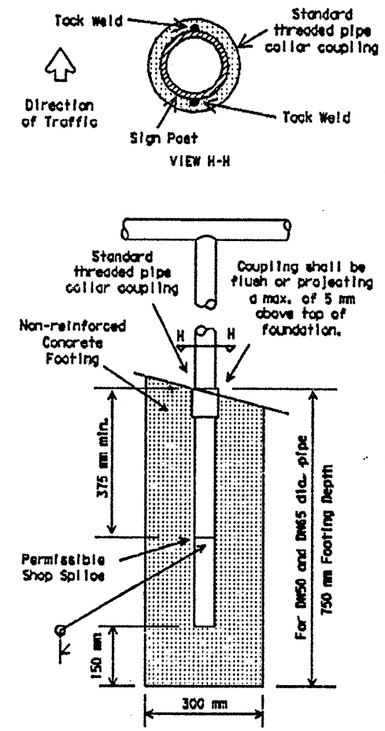

Pipe collar coupling shall be used for all signs supported on DN50 and DN65 diameter pipe post.

TRIANGULAR SLIP BASE

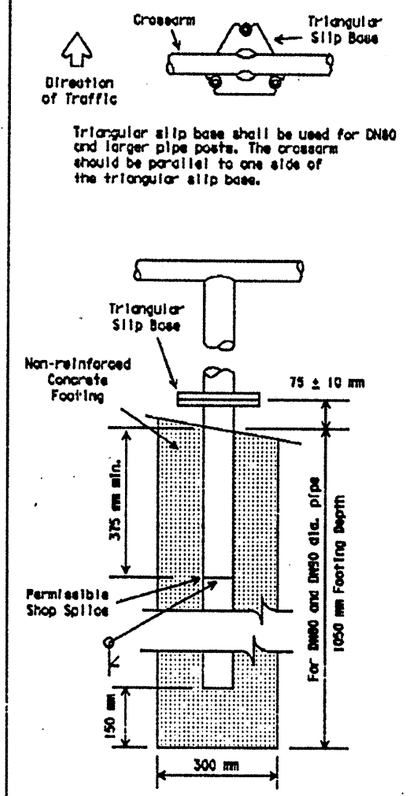

Triangular slip base shall be used for DN80 and larger pipe posts. The crossarm should be parallel to one side of the triangular slip base.

Triangular Slip Base shall be used for signs supported on DN80 diameter and larger pipe posts.

GENERAL NOTES:

Support and design shall conform with AASHTO Standard Specifications for structural supports of Highway signs, luminaires and traffic signals with a design wind speed of 80 mph.

Steel pipe shall be galvanized in accordance to ASTM Designation A123.

Where solid rock is encountered at ground level, the foundation shall be a minimum depth of 450 mm. When solid rock is encountered below ground level, the foundation shall extend into the solid rock a minimum depth of 450 mm or provide a minimum foundation depth of 750 mm. Only concrete foundations shall be used in rock.

FRP SUPPORTS

Materials and fabrication shall conform to the requirements of Department Material Specification D-9-4410 and will be furnished in a yellow or gray color as specified elsewhere in the plans.

Thickness of FRP sign support is 3.175 mm + 0.787 mm, - 0.0 mm.

For FRP sign supports, all bolts, nuts, screws, washers and other miscellaneous hardware, shall be type 304 stainless steel or galvanized in accordance to ASTM Designation: A-153, Class C or D, B-695 Class 50 or B633 Class FE/ZN 8 unless otherwise specified.

FRP sign supports for a single type sign support may be used for signs up to and including 1.48 square meters. Dual post installation may be used for signs up to and including 3.34 square meters.

FRP sign supports are prequalified by the Traffic Operations Division. Prequalification procedures are obtained by writing:

TX DOT
Traffic Operations Division
125 E. 11th Street
Austin, Tx 78701-2483.

All dimensions are in millimeters unless otherwise noted.

STANDARD PLANS
TEXAS DEPARTMENT OF TRANSPORTATION
Traffic Operations Division

SMALL ROADSIDE SIGN FOUNDATION DETAILS

SMD(1-4)-97(M)

DN: LR	CK:	DW: DN	CK: MT	
REVISIONS	STATE	FEDERAL AID REGION	FEDERAL AID PROJECT	SHEET
1-97	15	6	RD-2452-1-35	386
	COUNTY		CONTROL / SECTION / JOB	HIGHWAY
	REVISED		1242 / 01 / 035	LOMAX

DN: CK: DW: CK:

LEVEL: D	DATE:
1 2 3 4 5 6 7 8 9 10 11 12 13 14 15 16	ACC:
	FILE:

DISCLAIMER
The use of this standard is governed by the "Texas Engineering Practice Act". No warranty of any kind is made by TxDOT for any purpose whatsoever. TxDOT assumes no responsibility for the conversion of this standard to other formats or for incorrect results or damages resulting from its use.

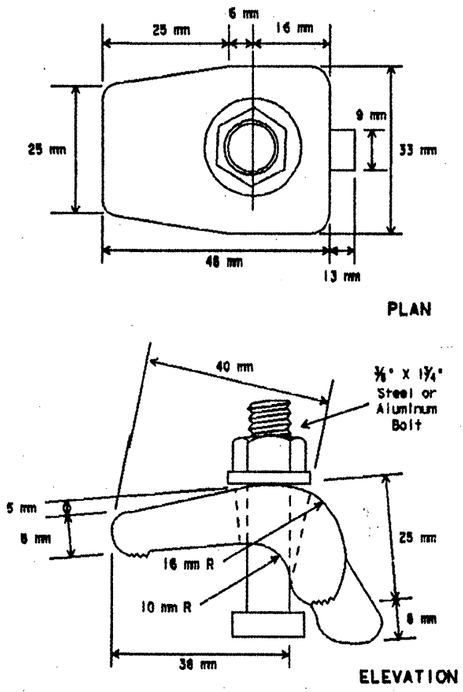

ALTERNATE POST CLAMP DETAIL

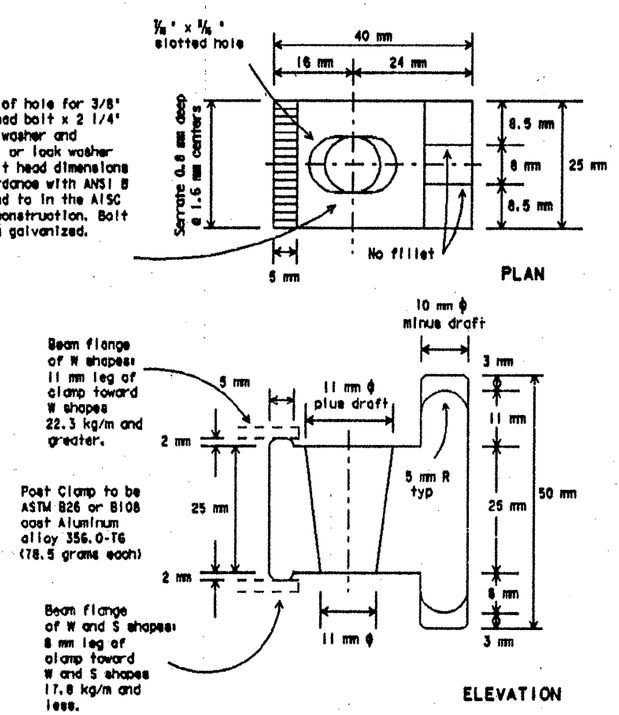

NOTE: centerline of hole for 3/8" diameter squarehead bolt x 2 1/4" long with a flat washer and self-locking nut, or lock washer and hex. nut. Bolt head dimensions shall be in accordance with ANSI B 18.2.1 as referred to in the AISC Manual of steel construction. Bolt assembly shall be galvanized.

POST CLAMP DETAIL

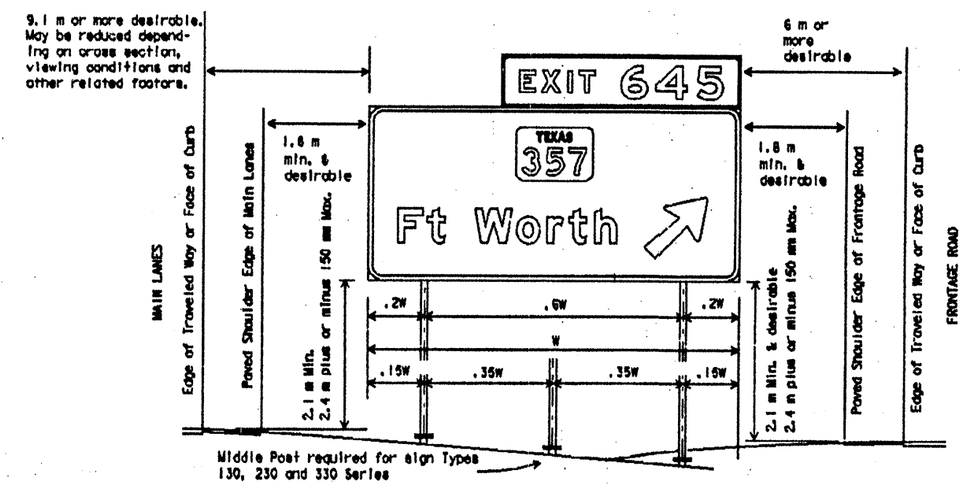

TYPICAL SIGN INSTALLATION AND LOCATION

LATERAL CLEARANCE NOTES:

Lateral clearances of signs mounted on median side of main lanes are the same as shown above where space will permit.

Where a sign is to be located behind guardrail, an allowable minimum clearance of 0.6 meter may be used, measured from the face of the guardrail to the near edge of sign.

POST SPACING NOTES:

Post spacing on a two post sign may vary a maximum of plus or minus 10% of total sign width to fit field conditions.

Post spacing on a three post sign may vary a maximum of plus 5% of total sign width to fit field conditions.

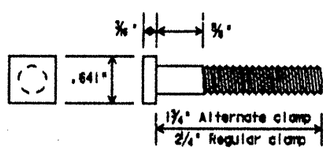

POST CLAMP BOLT DETAIL

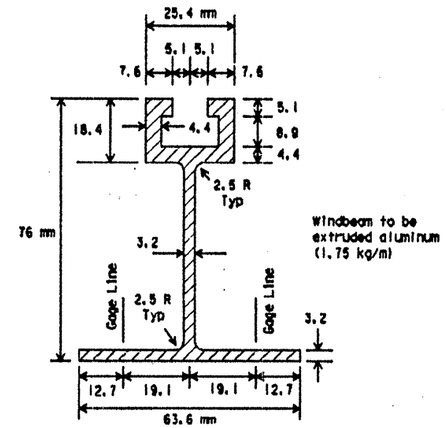

WINDBEAM CROSS SECTION

SPECIFICATION REFERENCE TABLE
MATERIALS AND TESTS DIVISION SPECIFICATIONS
SIGN HARDWARE D-9-7120

GENERAL NOTES:

1. Design conforms with AASHTO Specifications for the design and construction of structural supports for highway signs.
2. Materials and fabrication shall conform to the requirements of the Department material specifications.
3. Structural steel shall be high strength steel (HS) in accordance with the Item 442, "Metal For Structures."
4. Parts shall be saw cut either before galvanizing and the galvanized cut cleaned of zinc build-up, or saw cut after galvanizing and the cut surface treated with zinc-based solder or zinc-rich paint in accordance with ASTM A780. (Cut surface will not be treated until plate is installed and all bolts fully tightened.)
5. Exit number panel shall be mounted to the right hand side of the parent sign for right exits and to the left for left hand exits. The number panel shall be mounted with two uprights so its right edge is even with the right edge of the parent sign or vice-versa for left hand exits.

All metric dimensions have been rounded and should be considered equivalent to English hardware and specifications. All dimensions are in millimeters unless otherwise noted.

WIND BEAM TABLES

For sign widths not listed, select next larger sign width from tables for maximum wind beam spacing.

Example: Sign Code = 120, Sign Width = 4.4 m ⟶ select 4.6 m Sign Width
Max. Wind Beam Spacing = 914 mm

CODE

SIGN TYPE 1 3 0
- Wind Design Zone
- Series No. (Zero Denotes Plywood) (1 Denotes Aluminum)
- No. of Posts

ZONE 1 (Types 100)

	Two Posts (120)							Three Posts (130)									
Sign Width (W) (meters)	1.2 thru 3.6	4.0	4.3	4.6	4.9	5.2	5.5	5.8	6.1	6.4	6.7	7.0	7.3	7.6	7.9	8.2	8.5
Max. Wind Beam Spacing	1219 mm	1118	1016	914	813	711	610	1219	1143	1067	991	914	838	762	686	610	

ZONE 2 (Types 200)

	Two Posts (220)			Three Posts (230)				
Sign Width (W) (meters)	1.2 thru 4.9	5.2	5.5	5.8 thru 7.3	7.6	7.9	8.2	8.5
Max. Wind Beam Spacing	1219 mm	1143	1067	1219 mm	1143	1067	991	914

ZONE 3 (Types 300)

	Two Posts (320)	Three Posts (330)
Sign Width (W) (meters)	1.2 thru 5.5	5.8 thru 8.5
Max. Wind Beam Spacing	1219 mm	1219 mm

SIGN SUPPORTS SHALL NOT BE SPLICED EXCEPT AS SHOWN ELSEWHERE ON SMD STANDARDS

STANDARD PLANS
TEXAS DEPARTMENT OF TRANSPORTATION
Traffic Operations Division

SIGN MOUNTING DETAILS-LARGE ROADSIDE SIGNS STRUCTURE

SMD(2-1)-97(M)

©1996 DWN DATE: August 1995	DWN-LR	CK-MT	DN-DN	CK-	REV DATE
REVISIONS 6-96 1-97	FEDERAL AID PROJECT				SHEET 327
	15	6	CD-2452-1-35		
	COUNTY BEXAR		CONTROL 2452	SECTION 01	JOB 035
			HIGHWAY LP410		

Metric 27A

LEVELS DISPLAYED 1 3 4 5 6 7 8 9 10 11 12 13 14 15 16
17 18 19 20 22 23 24 25 26 27 28 29 30 31 32
33 34 35 36 37 38 39 40 41 42 43 44 45 46 47 48
49 50 51 52 53 54 55 56 57 58 59 60 61 62 63

DATE:
ACC:
FILE:

DN:
CK:
DW:
CK:

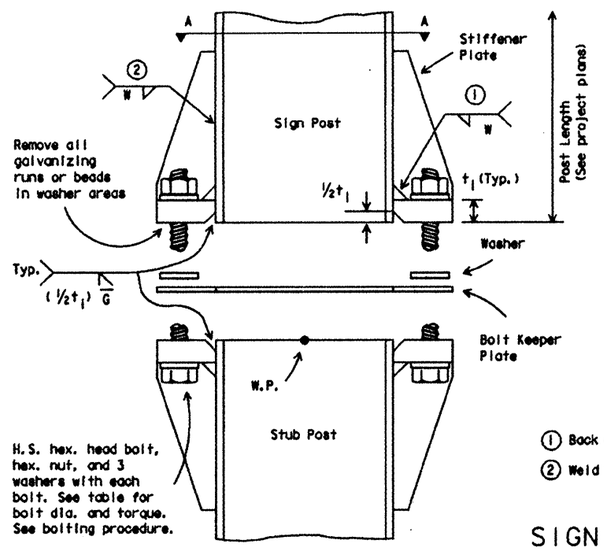

ELEVATION

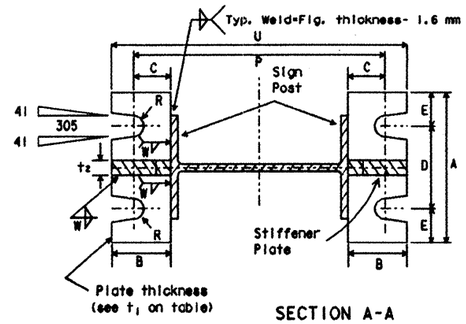

SECTION A-A

① Back up weld to be made before installing stiffener plate

② Weld W may be continued across clips to seal joint

SIGN POST AND STUB POST

(For W Shapes)

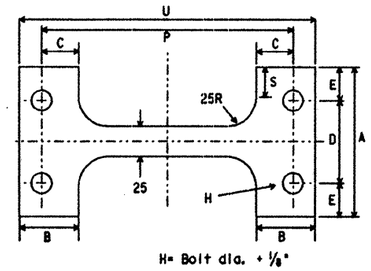

BOLT KEEPER PLATE

30 Ga galv. sheet steel

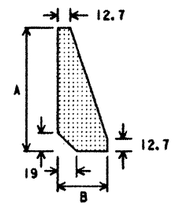

STIFFENER PLATE DETAIL

Steel Plate (thickness = t_2)

(See table for dimensions)

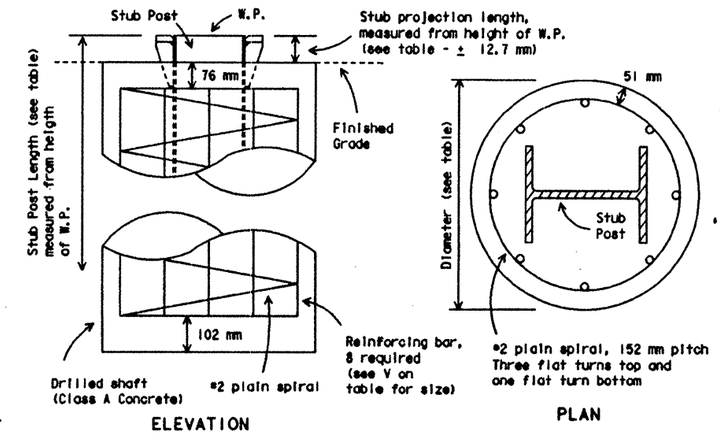

FOUNDATION DETAIL

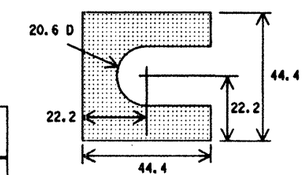

SHIM DETAIL

Furnish two 0.3 mm + thick and two 0.8 mm + thick shims per post. Shims shall be fabricated from brass shim stock or strip conforming to ASTM B36.

BOLTING PROCEDURE FOR ASSEMBLY OF BASE CONNECTION:

1. Assemble sign post, BOLT KEEPER PLATE and stub post with bolts and three flat washers per bolt as shown.
2. Shim as required to plumb post.
3. Tighten all bolts the maximum possible with a 12 to 15 inch wrench to clean bolt threads and to bed washers and shims.
4. Loosen each bolt in sequence and retighten bolts in a systematic order to the prescribed torque. Do not overtighten.
5. To prevent nut loosening, burr threads of bolt at junction with nut using a center punch.

Dimensions	Base Connection Data Table										Perforated Fuse Plate Data Table											Bolt Keeper Data			Foundation Data			
mm x kg/m Post Size	Bolt Size & Torque	A	B	C	D	E	t_1	t_2	W	R	F	G	J	K	M	d_1	d_2	t_3	Bolt Dia.	Wt. (ea.) (grams)	Bolt length	P	S	U	Stub length	Stub projection	Dr. Shaft diameter	Bar V Size
W150x14	⅝"ϕ x 2¾" 440-450 inch pounds 36-38 foot pounds	126	51	32	70	28	19	12.7	6	8.7	108	51	102	57	25	9/16"	¾"	6.4	½"	458	1½"	213	25	251	610	76	610	#5
W150x18																						216		254	610	76		#5
W150x22											127	64	152	89	38	11/16"	1¼"	9.5	⅝"	1138	2¼"	216		254	762	76		#6
W200x27											127	64	133	70	32	11/16"	1 1/16"	9.5	⅝"	1025	2¼"	270		308	762	76		#7
W200x31	¾"ϕ x 3½" 740-750 inch pounds 62-63 foot pounds	153	57	35	89	32	25.4	19	8	10.3	140	64	133	70	32	13/16"	1"	12.7	¾"	1520	2¼"	279	38	323	914	64		#8
W250x33											152	76	146	70	35	13/16"	1⅛"	12.7	¾"	1828	2¼"	327		371	914	64		#9
W250x39																						333		377	914	64		#10
W310x39											152	76	165	89	41	13/16"	1 5/16"	12.7	¾"	2028	2¼"	381		425	914	64		#11
S75x8	½"ϕ x 2½" 440-450 inch pounds 34-36 foot pounds	See Detail Below									95	38	67	38	16	9/16"	⅜"	6.4	½"	272	1½"	See Detail Below			1003	89	305	Non-reinforced ③
S100x11																												

③ Foundation design shall be Type G Mount, see SMD(TY G)(M).

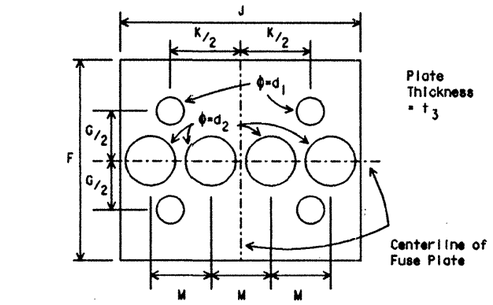

PERFORATED FUSE PLATE DETAIL

Use H.S. hex head bolts, hex head nut and bevel or flat washer (where req'd) under nut. All holes shall be drilled. All plate cuts shall preferably be saw cuts. However; flame cutting will be permitted provided all edges are ground. Metal projecting beyond the plane of the plate face will not be permitted. Steel fuse plates shall conform to the requirements of ASTM A36. ASTM A572 Grade 50 or ASTM A588 may be substituted for A36 at the option of the fabricator. Mill test reports shall be submitted for Fuse Plates. Steel used shall have an ultimate tensile strength not to exceed 550 MPa.

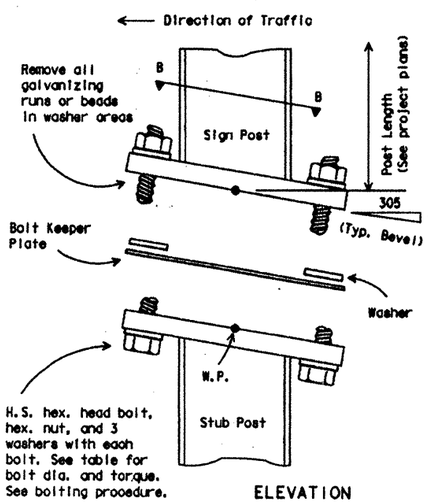

ELEVATION

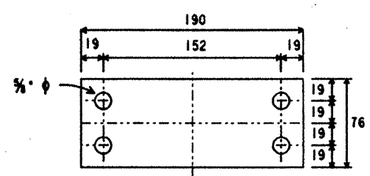

BOLT KEEPER PLATE

30 Ga galv. sheet steel

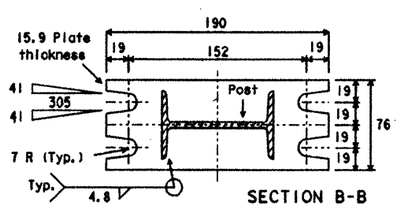

SECTION B-B

SIGN POST AND STUB POST

(For S100x11 and S75x8)

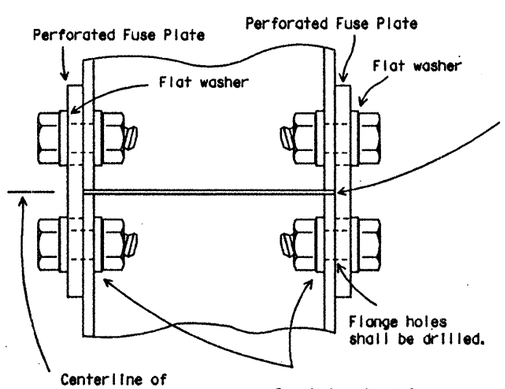

DETAIL "A"

Parts shall be saw cut either before galvanizing and the galvanized cut cleaned of zinc build-up, or saw cut after galvanizing and the cut surface treated with zinc-based solder or zinc-rich paint in accordance with ASTM A780. (Cut surface will not be treated until plate is installed and all bolts fully tightened.)

All metric dimensions have been rounded and should be considered equivalent to English hardware and specifications. All dimensions are in millimeters unless otherwise noted.

STANDARD PLANS
TEXAS DEPARTMENT OF TRANSPORTATION
Traffic Operations Division

SIGN MOUNTING DETAILS- LARGE ROADSIDE SIGNS FOUNDATION & STUB

SMD(2-2)-95A(M)

©1995 DGN DATE: August 1995	DGN: LR	CK: -	DW: DN	CK: -	MSD NO.:	
REVISIONS 1-96	STATE DISTRICT 15	FEDERAL REGION 6	FEDERAL AID PROJECT CB 2452-1-35			SHEET 388
	COUNTY BEXAR		CONTROL 2452	SECTION 01	JOB 035	HIGHWAY LP410

DISCLAIMER
The use of this standard is governed by the "Texas Engineering Practice Act". No warranty of any kind is made by TxDOT for any purpose whatsoever. TxDOT assumes no responsibility for the conversion of this standard to other formats or for incorrect results or damages resulting from its use.

DN: LR CK: CW DW: DN CK: WT

LEVELS DISPLAYED 1 2 3 4 5 6 7 8 9 10 11 12 13 14 15 16 17 18 19 20 21 22 23 24 25 26 27 28 29 30 31 32 33 34 35 36 37 38 39 40 41 42 43 44 45 46 47 48 49 50 51 52 53 54 55 56 57 58 59 60 61 62 63

DATE: ACC: d58hpio/usr/d580504 FILE:

TYPICAL PLYWOOD SIGN & EXIT PANEL ASSEMBLY DETAILS

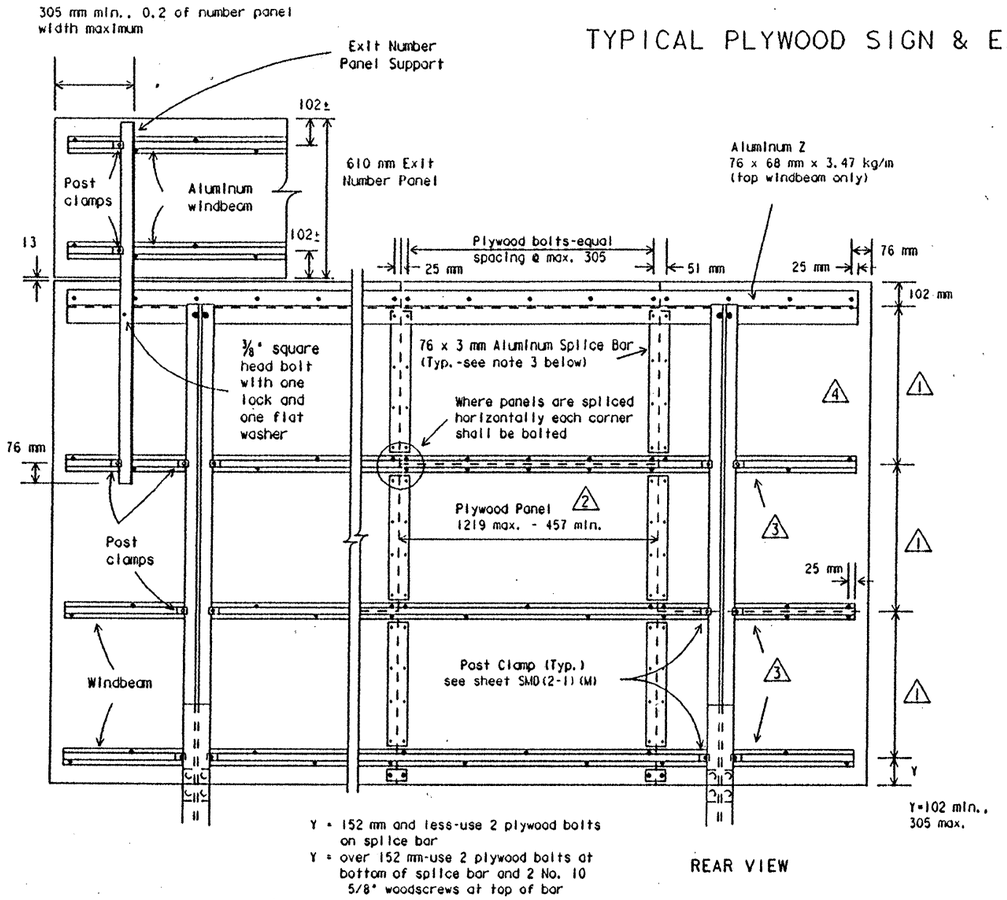

REAR VIEW

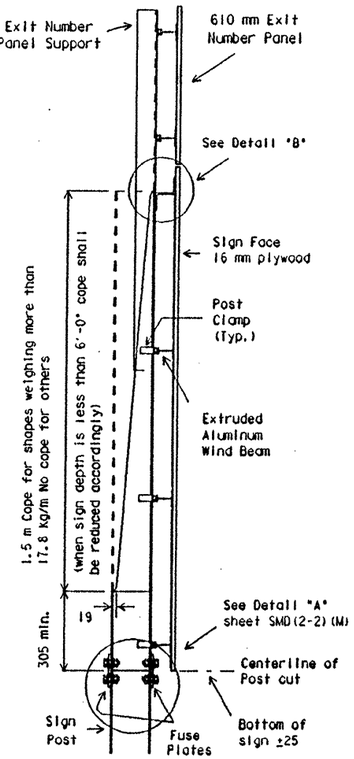

SIDE VIEW

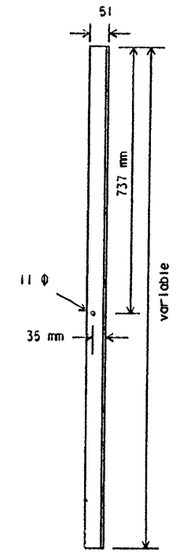

L76 x 51 x 6.4 mm Steel Upright or
L76 x 51 x 9.5 mm Aluminum Upright or
76 mm Windbeam

EXIT NUMBER PANEL SUPPORT

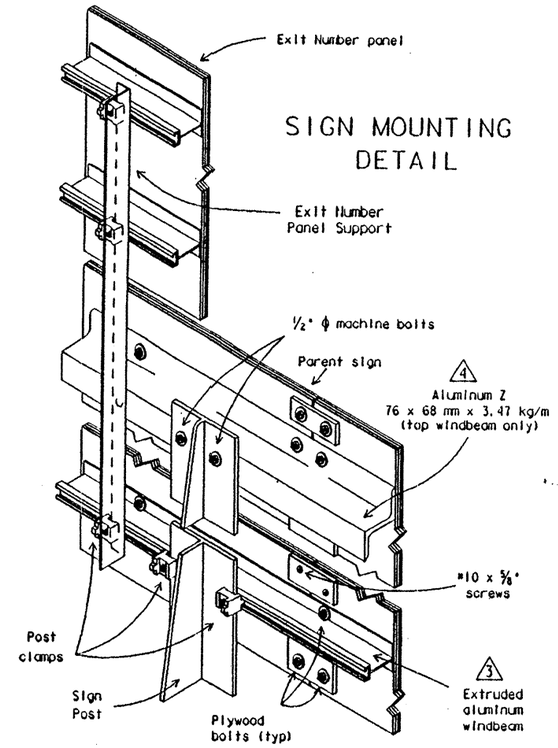

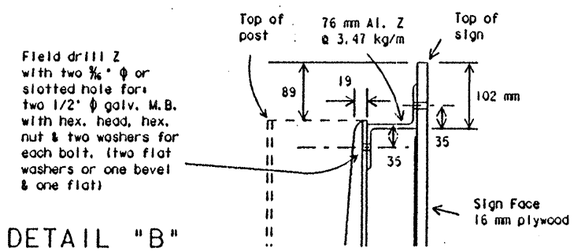

DETAIL "B"

NOTES:

1. A tolerance of plus or minus 6 mm will be permitted in the plan dimensions for fabrication of each single increment sign panel when necessary for squaring. A tolerance of plus or minus 6 mm will be permitted for each increment of a multi-increment sign panel where necessary to secure square, tight-fitting joints.
2. Plywood bolts shall be 5/8" x 1½" elevator type steel with flat or slightly hemispherical head and ¾" minimum thread length. The head shall have a minimum diameter of 11/16" and a minimum of two fins on the underside. Each bolt shall be provided with one 5/16" steel hex nut, one 5/16" steel flat washer, and one 5/16" steel lock washer. Bolts, nuts and washers shall be galvanized in accordance with ASTM Designation: B695, Class 50, or A153 Class C or D.
3. Splice bars shall be secured with 5/8" long x #10 round head, stainless steel wood screws spaced at 152 mm maximum along double row spacing with the exception at extreme ends of splice bars, along outside edge of sign, where plywood bolts shall be used as shown. A maximum of one horizontal joint per vertical section will be permitted using a 3 mm gap between panels.
4. Splices shall be kept to a minimum. Panels 1.2 x 2.4 m or larger shall be used to the maximum extent possible in the fabrication of any sign. Signs or sign sections which cannot be fabricated from at least a 1.2 x 2.4 m panel shall be of one piece construction.

1. Approximately equal spacing, fabricator may vary spacing for least interference with message and to utilize wind beam for horizontal splice. Wind beam spacing will not exceed the maximum shown in table on sheet SMD(2-1)(M). Staggered arrangement of horizontal splices as shown is preferred. However, a single horizontal joint across the sign face is permissible.
2. For signs 1.2 m or less in height the plywood panel may exceed 1.2 m in width.
3. Extruded aluminum wind beams shall be continuous with no splices. (see sheet SMD(2-1)(M).
4. Aluminum Z will be provided unless stated otherwise in the plans. If noted elsewhere in the plans, 1.75 kg/m extruded aluminum windbeam may be used.

All metric dimensions have been rounded and should be considered equivalent to English hardware and specifications. All dimensions are in millimeters unless otherwise noted.

NOTES:

1. Exit number panel shall be mounted to the right hand side of the parent sign for right exits and to the left for left hand exits. The number panel shall be mounted with two uprights so its right edge is even with the right edge of the parent sign or vice-versa for left hand exits.
2. Exit number panel support shall be symmetrical about number panel centerline.
3. Exit number panel support shall be of ASTM A36 structural steel galvanized after fabrication, or ASTM B221 aluminum alloy 6061-T6.
4. All bolts, nuts and washers shall be galvanized per ASTM Designation: B695 Class 50, or A153 Class C or D.
5. When splice bars are required to fabricate the number panel, the splice bar detail as shown for the parent sign is to be used. Splice bars on number panel need not align with those on parent sign.
6. Posts, parent sign panels and exit number panels shall comply with notes on sheets SMD(2-1)(M) and SMD(2-2)(M).
7. Signs (such as exit number panels) attached above a parent sign shall be made of the same type material as the parent sign.
8. Exit number panel support and other connection hardware required to fasten exit number panel to parent sign shall be subsidiary to the sign blank.

All dimensions are in millimeters unless otherwise noted.

STANDARD PLANS
TEXAS DEPARTMENT OF TRANSPORTATION
Traffic Operations Division

SIGN MOUNTING DETAILS-LARGE ROADSIDE SIGNS, PLYWOOD

SMD(2-3)-95A(M)

ORIG. SHEET DATE: August 1995	DN: LR	CK:	DW: DN	CK:	REV. NO.:
REVISIONS: 1-96	STATE DISTRICT: 15	FEDERAL REGION: 6	FEDERAL AID PROJECT: 05245 2-1-35		SHEET: 3&4
COUNTY: BEXAR			CONTROL: 2452	SECTION: 01	JOB: 035

DISCLAIMER
The use of this standard is governed by the "Texas Engineer... ractice Act". No warranty of any kind is made by TxDOT for any purpose whatsoever. TxDOT assu... no responsibility for the conversion of this standard to other formats or for incorrect results or damages resulting from its use.

WING CHANNEL CLAMP DETAIL FOR TYPE G MOUNT

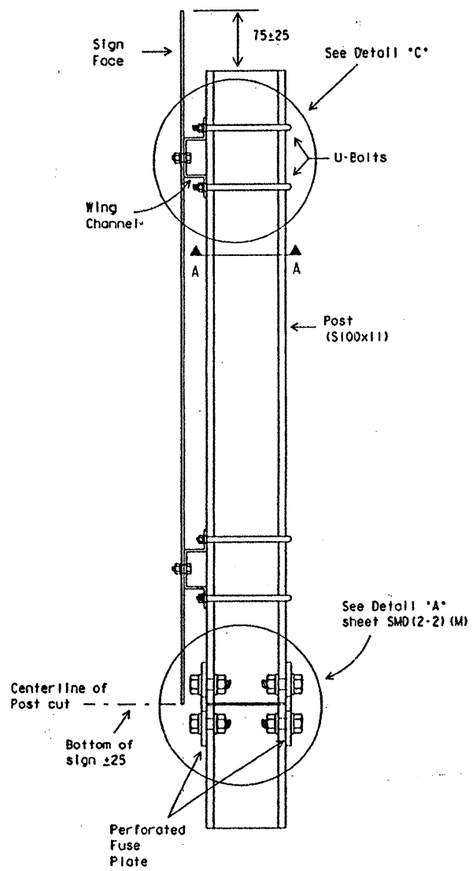

SIDE VIEW

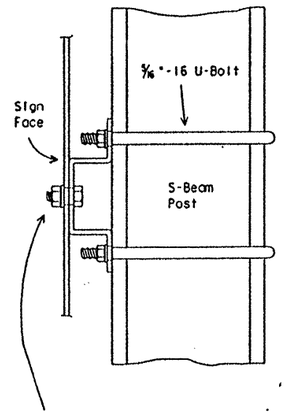

Galvanized steel or aluminum self-locking hex. head nut. 3/8" - 16 x 3/4" hex. head bolt for sheet metal. 3/8" - 16 x 1 1/4" hex. head bolt for plywood. 3/8" galvanized medium washer.

DETAIL "C"

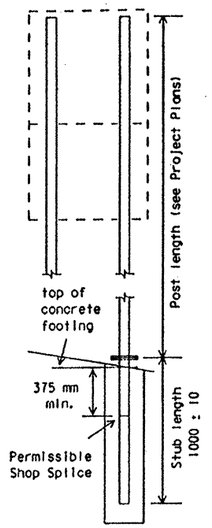

The weight of one S100x11 post is equal to 50.9 kg plus 11.5 kg/m x (post length in meters minus 3 m). The weight of 50.9 kg includes 3 m of post length, post foundation stub, related connection plates, friction fuse plate, and all high strength bolts, nuts and washers.

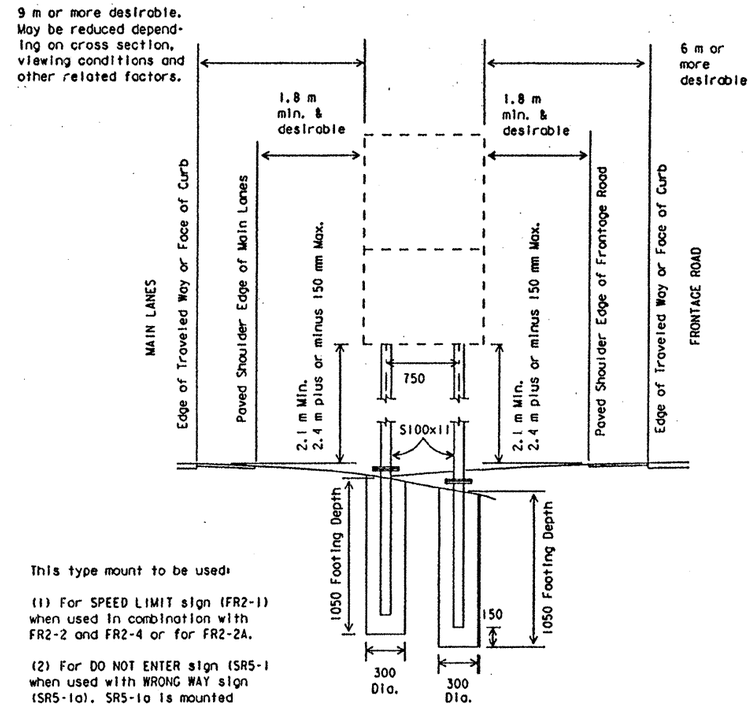

This type mount to be used:

(1) For SPEED LIMIT sign (FR2-1) when used in combination with FR2-2 and FR2-4 or for FR2-2A.

(2) For DO NOT ENTER sign (SR5-1 when used with WRONG WAY sign (SR5-1a). SR5-1a is mounted above SR5-1.

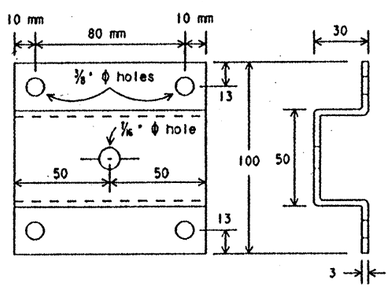

WING CHANNEL

Wing channel, 100 mm width x 30 mm depth x 3 mm thickness, shall be aluminum (ASTM B221 6061-T6 or B308 6061-T6), galvanized steel (ASTM A36) or stainless steel (ASTM A167 type 304, No. 2B finish).

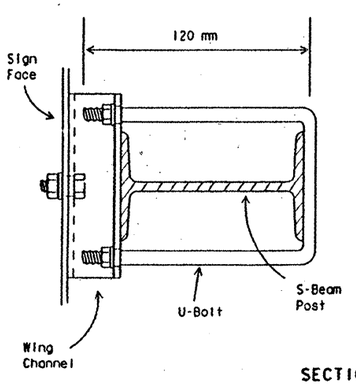

SECTION A-A

All metric dimensions have been rounded and should be considered equivalent to English hardware and specifications. All dimensions are in millimeters unless otherwise noted.

SPECIFICATION REFERENCE TABLE
MATERIALS AND TESTS DIVISION SPECIFICATIONS
SIGN HARDWARE D-9-7120

GENERAL NOTES:

1. Design conforms with AASHTO Specifications for the design and construction of structural supports for highway signs.
2. Materials and fabrication shall conform to the requirements of the Department material specifications.
3. Structural steel shall be high strength steel (HS) in accordance with Item 442, "Metal For Structures."
4. Parts shall be saw cut either before galvanizing and the galvanized cut cleaned of zinc build-up, or saw cut after galvanizing and the cut surface treated with zinc-based solder or zinc-rich paint in accordance with ASTM A780. (Cut surface will not be treated until plate is installed and all bolts fully tightened.)

STANDARD PLANS
TEXAS DEPARTMENT OF TRANSPORTATION
Traffic Operations Division

SIGN MOUNTING DETAILS, TYPE G SUPPORT

SMD(TY G)-97(M)

ORIG DRAW DATE: August 1995	DN: LR	CK:	CK: DN	CK:	NEG NO.:
REVISIONS 1-97	STATE DISTRICT 15	FEDERAL REGION 6	FEDERAL AID PROJECT CD2452-1-35		SHEET 390
	COUNTY BEXAR		CONTROL 2452	SECTION 01	JOB. 035 HIGHWAY LP1604

Metric 28

LEVELS DISPLAYED
DATE:
ACC:
FILE:
DN:
CK:
DW:
CK:

DISCLAIMER
The use of this standard is governed by the "Texas Engineer Practice Act". No warranty of any kind is made by TxDOT for any purpose whatsoever. TxDOT assumes no responsibility for the conversion of this standard to other formats or for incorrect results or damages resulting from its use.

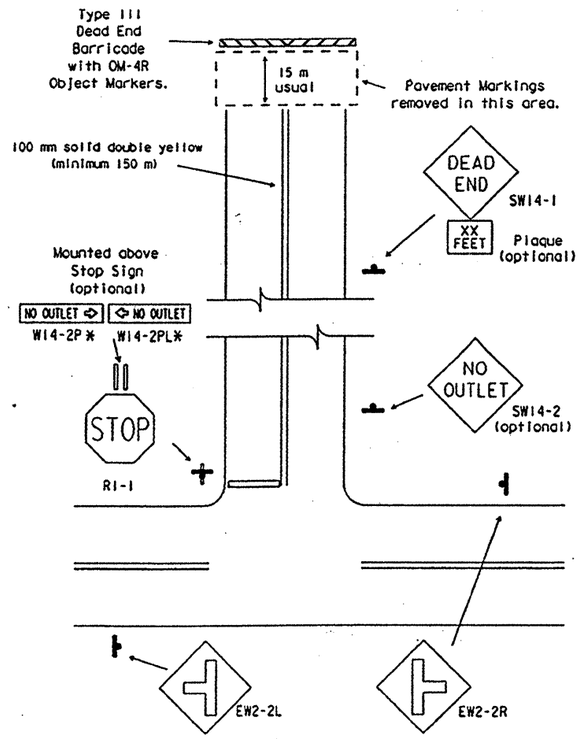

* W14-1P DEAD END plaque may be used as an alternate.

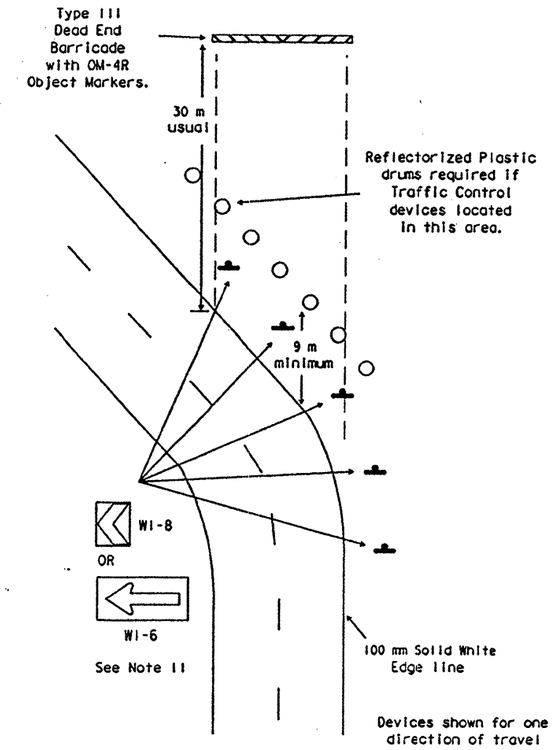

TYPICAL INSTALLATION

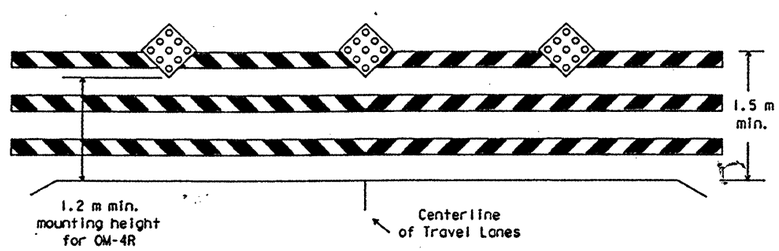

Barricade striping is red and white sloping toward the center of the roadway.

TYPICAL LOW VOLUME ROADWAY INSTALLATION

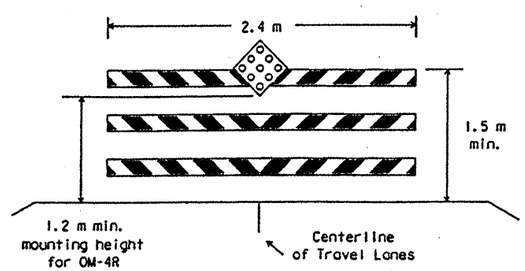

Barricade striping is red and white sloping toward the center of the roadway.

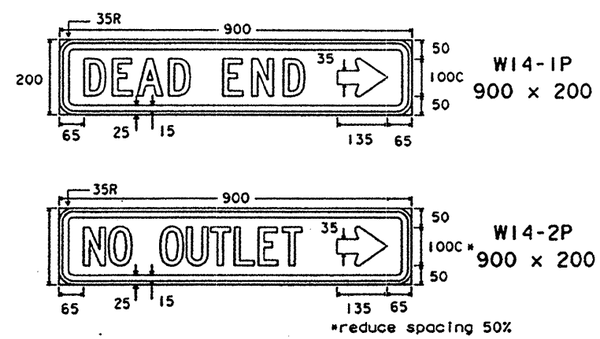

Letters - Black
Border - Black
Background - Yellow Refl.

See BC sheets for Barricade and Plastic Drum details.

All dimensions are in millimeters unless otherwise noted.

The metric dimensions shown on this sheet have been rounded, and should be considered equivalent to the English dimensions in the "1980 Standard Highway Sign Designs for Texas" manual.

SPECIFICATION REFERENCE TABLE
MATERIALS AND TESTS DIVISION SPECIFICATIONS

PLYWOOD SIGN BLANKS	D-9-7100
ALUMINUM SIGN BLANKS	D-9-7110
SIGN HARDWARE	D-9-7120
WINGED CHANNEL POSTS	D-9-7130
FLAT SURFACE REFLECTIVE SHEETING, TYPE C (HIGH SPECIFIC INTENSITY)	D-9-8300
DELINEATOR AND OBJECT MARKER	D-9-8600

GENERAL NOTES:

1. Barricade striping shall be red and white reflective sheeting for all permanent road closures. Orange and white reflective sheeting may be substituted for locations where duration of road closure is expected to be 18 months or less, or when approved by the Engineer. Red and orange reflective sheeting shall not be combined on barricades or locations.
2. Barricades shall be designed and constructed to BC Standards in a first-class workmanship manner of clean sound material. Components made of lumber shall be painted with a minimum of two coats of an approved brand of white paint to insure thorough coverage and a uniform white color. Striping material shall meet the color and reflective requirements of Material Specification D-9-8300.
3. Non-breakaway supports shall not be used as barricade supports. Barricades may be fabricated with "stand" supports if approved by the Engineer. Stand supports should be anchored to prevent movement.
4. Barricades shall not be placed parallel to traffic unless a minimum adequate clear zone of 9 m is provided.
5. Minimum one 2.4 m wide barricade and one OM-4R or OM-4P object marker shall be required for all locations. Barricades should extend across all travel lanes and shoulders if shoulders are present. Barricades may be extended to the ROW if necessary. Gates may be required as directed by the Engineer.
6. Stockpiled materials shall not be placed on traffic side of barricades.
7. OM-4 object markers may be mounted independently or attached to barricades.
8. Plastic drums shall meet the requirements as listed on BC Standards. Plastic drums may be anchored with adhesive to prevent movement.
9. All signs, object markers and chevrons shall be installed with hardware and support at the minimum mounting height in accordance with the DI&OM, SMD and BC Standards. Signs shall be mounted at a 2.1 m minimum mounting height. Signs shall not be attached to barricades.
10. Motorists should be able to see at least three chevron signs as they approach the curve and as they drive through the curve from either directions.
11. Delineation devices such as the chevron or large arrow signs shall only be placed on the outside portion of a curve.

GENERAL SIGN NOTES:

The alphabets and lateral spacing between letters and numerals shall conform with the Texas "Manual on Uniform Traffic Control Devices for Streets and Highways", latest edition, and any approved changes thereto. Lateral spacing of text shall provide a balanced appearance. All materials shall conform to Department Specifications.

Legend for W14-1P and W14-2P, shall be black and applied by screening process, cut-out vinyl non-reflective decal sheeting or combination thereof. Background shall be yellow reflective sheeting (Type C).

Sign blanks shall be one piece 2.0 mm thick sheet aluminum alloy (Type A) or one piece 16 mm thick plywood (Type A), unless otherwise noted elsewhere in the plans.

STANDARD PLANS
TEXAS DEPARTMENT OF TRANSPORTATION
Traffic Operations Division

DEAD END ROADWAY DETAILS

DERD-97 (M)

ORIG. DRAW DATE: August 1995	DN: LR/MT	CK:	DW: DN	CK: MT	REC. NO.:	
REVISIONS 1-97	STATE DISTRICT 13	FEDERAL REGION 6	FEDERAL AID PROJECT CG2452-1-35			SHEET 391
	COUNTY			CONTROL	SECTION	JOB	HIGHWAY

LEVELS DISPLAYED
DATE:
ACC:
FILE:
DN:
CK:
DW:
CK:

Note: Approx. 25 mm space between adjoining barrier sections

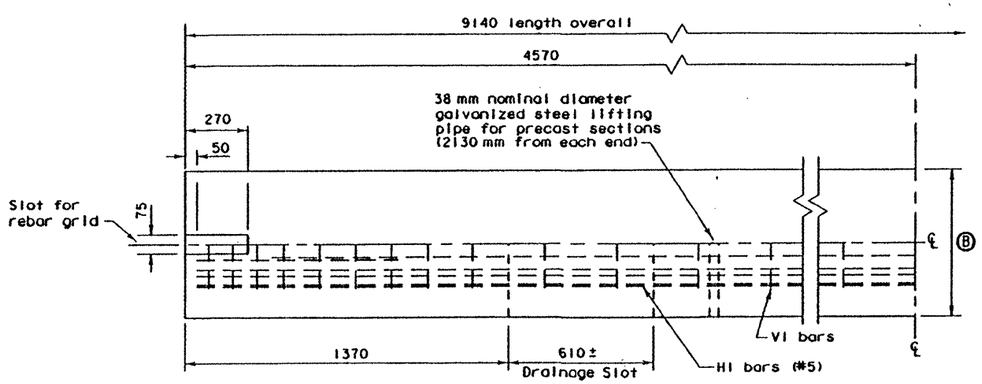

PLAN VIEW

(SYMMETRICAL ABOUTCENTER LINE)

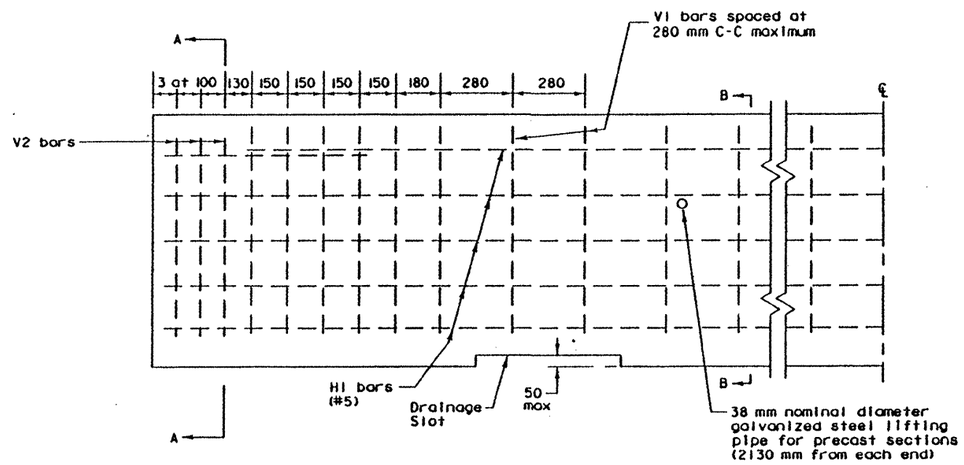

ELEVATION

(SYMMETRICAL ABOUT CENTERLINE)

GENERAL NOTES

1. Barrier length shall be 9140 mm (±25 mm) unless otherwise specified in the plans.
2. The usual temporary installation will require the placement of the rebar grid in the ungrouted slot. The usual permanent installation using precast barrier will connect the barrier segments with the rebar grid placed in the slot and grouted in place.
3. When installed in a permanent roadway location, the end connections of the precast barrier shall be grouted with a mixture of two parts sand and one part cement with enough water to make the mixture plastic. Grouting shall be done in a manner that will assure a smooth surface at the joint.
4. All concrete shall be class C or H, unless otherwise specified.
5. All reinforcing steel shall be Grade 420, unless otherwise specified.
6. Each precast barrier to be installed in a temporary location shall be delivered with a rebar grid.
7. Chamfer top and end edges 20 mm.
8. Unless otherwise shown in the plans, the Contractor has the option of placing either precast or cast-in-place permanent concrete barrier. Cast-in-place barrier may be slip formed. Additional reinforcement may be tack welded to the upper two-thirds of the reinforcing cage to provide bracing. Additional vertical bars shall be provided only to the extent necessary to position longitudinal steel within tolerances. Lifting pipe, rebar grid and slot shall be omitted for cast-in-place construction.
9. Bar splices for roadway barrier shall be a minimum of 24 times the nominal diameter of the bar.
10. Any method devised by the Contractor and approved by the Engineer that will assure the longitudinal roadway steel will be positioned ±10 mm as dimensioned will be satisfactory.
11. Welded wire fabric may be used as an option to conventional reinforcement for precast or cast-in-place barrier. Welded wire fabric shall be made in accordance with ASTM A 497.
12. Conduit will be provided only when called for elsewhere in the plans. The position of the conduit or conduit passageway may be adjusted to facilitate construction, subject to approval of the Engineer.
13. Transitions to barrier height, as needed, shall be determined by the Engineer. Changes in barrier height should not normally exceed 50 mm per 9140 mm. Vertical steel shall be uniformly transitioned throughout the variation in barrier height as directed by the Engineer.
14. A 920 mm minimum height differential between top of barrier and top of ACP shall be required at placement in order to allow for up to 150 mm of future overlays while maintaining a 770 mm minimum future effective height of barrier. Total minimal barrier height for design is therefore dictated by allowance for future overlays plus existing stairstep dimension "S". Minimums typically rounded to 1070 mm, 1220 mm, or 1370 mm to facilitate precasting.

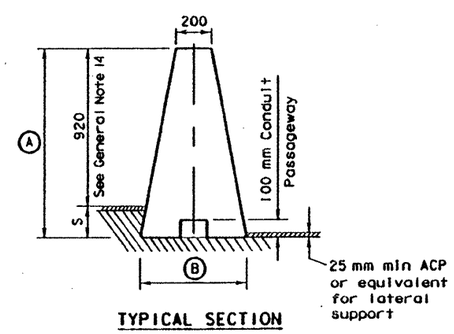

TYPICAL SECTION

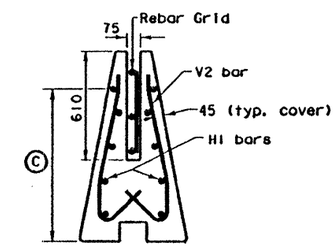

SECTION A-A

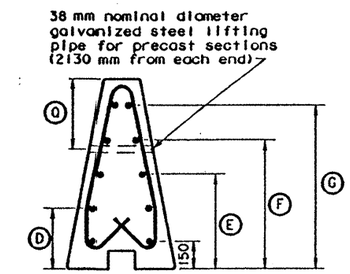

SECTION B-B

R = Radius
D = Diameter
All unit-less dimensions are millimeters

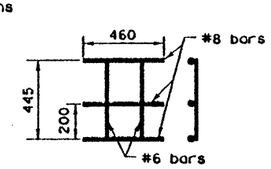

REBAR GRID

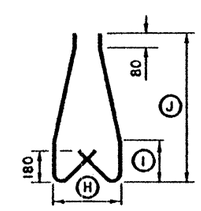

V2 BAR (#4)

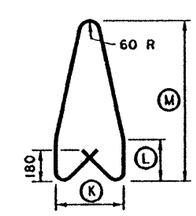

V1 BAR (#4)

REINFORCING DETAILS

When precast barrier is to be used with the welded wire fabric option, conventional bar reinforcement will be required within 610 mm, plus a development length of 460 mm, from the ends of each barrier segment.

Welded wire fabric
Ⓟ x 305-MD130 x MD90
420 MPa minimum yield strength

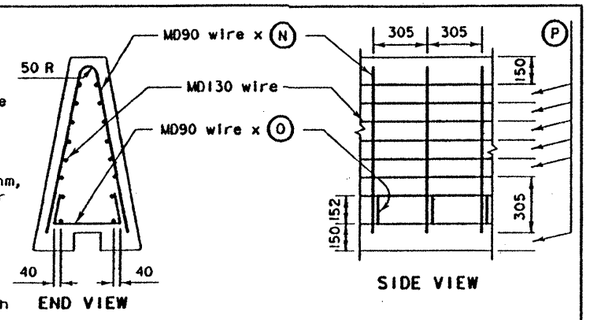

WELDED WIRE FABRIC OPTIONAL REINFORCING

BARRIER HEIGHT	DIMENSIONS																
Ⓐ	Ⓑ	Ⓒ	Ⓓ	Ⓔ	Ⓕ	Ⓖ	Ⓗ	Ⓘ	Ⓙ	Ⓚ	Ⓛ	Ⓜ	Ⓝ	Ⓞ	Ⓟ	Ⓠ
1070	608	850	345	535	720	920	380	235	845	380	235	920	1830	710	102	395
1220	665	1000	385	610	835	1070	435	275	995	435	275	1070	2140	800	102	430
1370	722	1150	425	685	950	1220	490	315	1145	490	315	1220	2440	890	152	380

Texas Department of Transportation
Design Division (Roadway)

SINGLE SLOPE CONCRETE BARRIER TYPE 2

SSCB(2)-95(M)

FILE: SSCB295M.DGN	DN: GTH	CK: GTH	DW: BGD	CK: TCM		
ORIG DATE:	DIST	FED REG	[redacted] PROJECT #			SHEET
REVISIONS	15	6	CD 2452-1-35			391A
	COUNTY		CONTROL	SECT	JOB	HIGHWAY
	BEXAR		2452	01	035	1604

LEVELS DISPLAYED

DISCLAIMER:
The use of this standard is governed by the "Texas Engineering Practice Act". No warranty of any kind is made by TxDOT for any purpose whatsoever. TxDOT assumes no responsibility for the conversion of this standard to other formats or for incorrect results or damages resulting from its use.

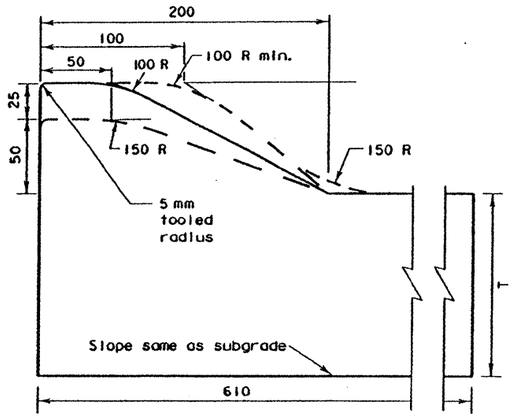

TYPE I CURB AND GUTTER

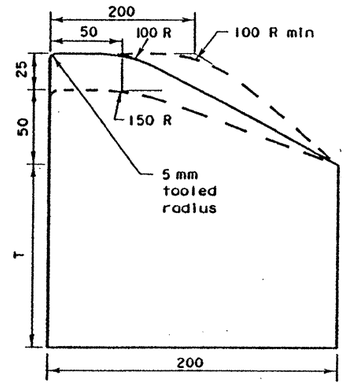

TYPE I CURB

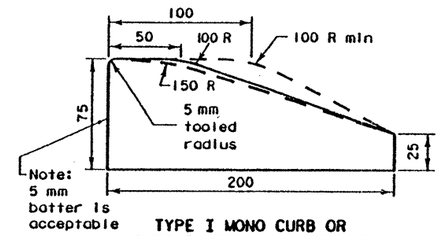

TYPE I MONO CURB OR
CURB PLACED ON PAVEMENT

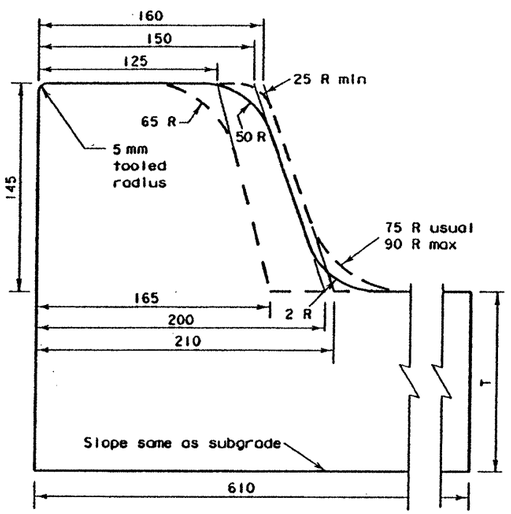

TYPE II CURB AND GUTTER

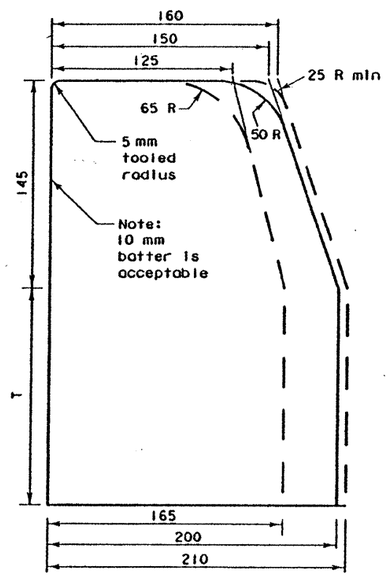

TYPE II CURB

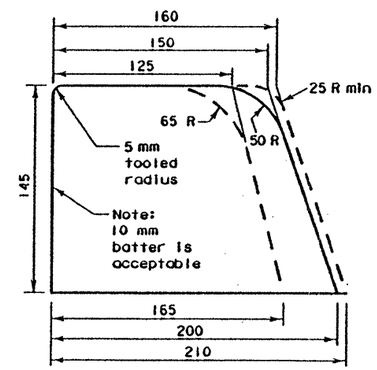

TYPE II MONO CURB OR
CURB PLACED ON PAVEMENT

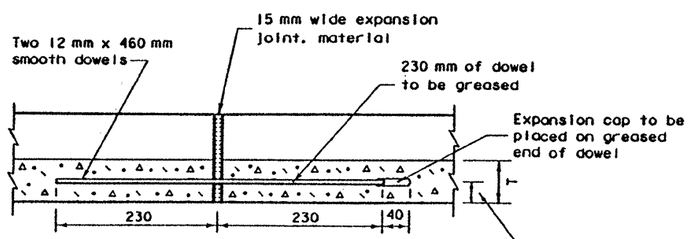

Longitudinal section thru curb and gutter showing typical expansion joint details.

Reinforcing steel (when used) shall not cross expansion joints. steel shall be terminated 75 mm ± 25 mm from face of the joint.

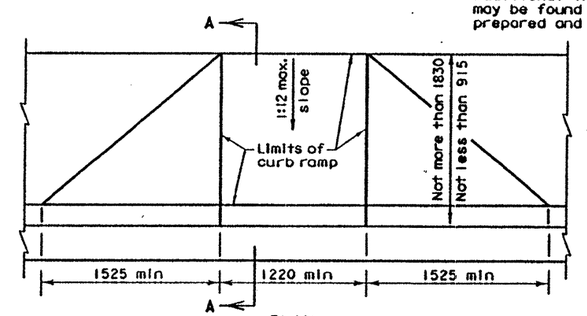

PLAN

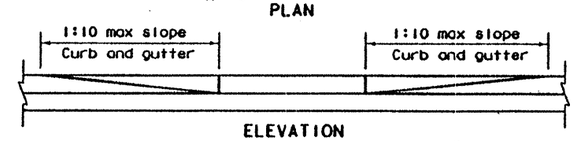

ELEVATION

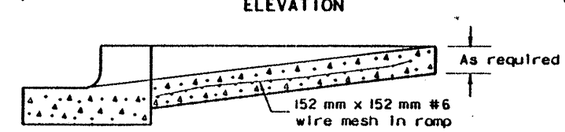

SECTION A-A
WHEELCHAIR AND BICYCLE RAMP

GENERAL NOTES

1. Contractor may use existing forms if the cross section lies within the band shown by dotted lines. If new forms are to be purchased, leased, or constructed they shall conform to the solid line.

2. When reinforcing steel is required or placed at contractor's option, one of the following schemes of reinforcement shall be required. The manner of placement and location shall be to the satisfaction of the engineer.

   a. Type I curb and gutter (reinf.) or Type II curb and gutter (reinf.) shall have longitudinal reinforcing bars as follows: three #3, two #4, two #5, or one #6.

   b. All types of curb (reinf.) shall have one #3 or #4 bar for for longitudinal reinforcement.

3. Reinforcing bars shall be lapped a minimum of 380 mm.

4. When curb or curb and gutter is placed by a separate pour adjacent to or atop concrete pavement, curb or curb and gutter shall be tied to pavement in a manner satisfactory to the engineer with 200 mm long #3 or #4 bars spaced at 1525 mm and expansion and/or contraction joints of curb or curb and gutter shall match those of pavement.

   When curb and curb and gutter is not constructed adjacent to concrete pavement, the following shall govern:

   a. Reinforced curb or curb and gutter shall have no contraction joints.

   b. Non-reinforced curb or curb and gutter shall have formed, tooled or sawed contraction joints at 3 meter ±. The depth of these joints shall be sufficient to ensure cracking at the joints.

   c. Reinforcing curb or curb and gutter shall have expansion joints at points of curvature and at intervals no greater than 36 meters in all curves and at structures such as bridges, box culverts, curb inlets, etc.

   d. Non-reinforced curb or curb and gutter shall have expansion joints at points of curvature on curves of radius less than 7.5 meters and at structures such as bridges, box culverts, curb inlets, etc.

5. Expansion joint material 12 mm in width shall be provided where curb or curb gutter is adjacent to sidewalk or riprap.

6. Transitions between curbs or curbs and gutters of differing cross section shall be accomplished over a 6 meter length as approved by the engineer.

7. At contractor's option, dimension "T" may be thickness of pavement structure. In no case shall it be less than 150 mm.

8. For purposes of warning, the full width and depth of curb ramps (limits of curb ramp) shall have a light reflective value and texture that significantly contrasts with that of adjoining pedestrian routes.

   Textures may, for example, consist of exposed crushed stone aggregate, roughened concrete, rubber, raised abrasive strips, or grooves extending the full width and depth of the curb ramps. Surfaces that are raised, etched, or grooved in a way that would allow water to accumulate are prohibited. Curb ramp treatment shall be approved by the Engineer prior to placement.

   Additional information on curb ramp location, design, visibility and texture may be found in the current edition of the Texas Accesibility Standards (TAS) prepared and administered by the Texas Department of Licensing and Regulation.

DISCLAIMER:
The use of this standard is governed by the "Texas Engineering Practice Act". No warranty of any kind is made by TxDOT for any purpose whatsoever. TxDOT assumes no responsibility for the conversion of this standard to other formats or for incorrect results or damages resulting from its use.

LEVELS DISPLAYED

Texas Department of Transportation
Design Division (Roadway)

CONCRETE CURB AND CURB AND GUTTER

CCCG-95 (M)

FILE: CCCG95M. DGN	DN: MAM	CK: RAR	DW: RAR	CK: MAM	MEG:	
ORIG DATE: 1975	DIST	FED REG	PROJECT •			SHEET
REVISIONS	15	6	CO 2452-1-35			3918
	COUNTY		CONTROL	SECT	JOB	HIGHWAY
	BEXAR		2452	01	035	11604

GENERAL NOTES

1. LOCATION AND DEPTH OF EXISTING UTILITIES SHOWN HERE ARE APPROXIMATE ONLY. ACTUAL LOCATIONS AND DEPTHS MUST BE FIELD VERIFIED BY THE CONTRACTOR PRIOR TO CONSTRUCTION AND SHALL BE RESPONSIBLE FOR PROTECTION OF SAME DURING CONSTRUCTION.

2. CONTRACTOR TO CONTACT THE TELEPHONE COMPANY CABLE LOCATOR 48 HOURS PRIOR TO EXCAVATION AT 954-4182. CONTRACTOR HAS THE RESPONSIBILITY TO PROTECT AND SUPPORT TELEPHONE COMPANY PLANT DURING CONSTRUCTION.

3. THE CONTRACTOR SHALL CALL THE SAN ANTONIO WATER SYSTEMS-WATER LINE LOCATOR 48 HOURS PRIOR TO EXCAVATION TO VERIFY SAME AT TELEPHONE NUMBER 704-7107 OR 7109.

4. WHEN SEWER LINES ARE INSTALLED IN THE VICINITY OF WATER MAINS, SUCH INSTALLATION SHALL BE IN STRICT ACCORDANCE WITH THE TEXAS DEPARTMENT OF HEALTH "RULES AND REGULATIONS FOR PUBLIC WATER SYSTEMS" (1988 OR ANY REVISIONS THERETO)(NO SEPARATE PAY ITEM).

5. WHEN SEWER LINES ARE INSTALLED IN THE VICINITY OF WATER MAINS, SUCH INSTALLATION SHALL BE IN STRICT ACCORDANCE WITH THE TEXAS NATURAL RESOURCE CONSERVATION COMMISSION'S RULES (31 TAC 317.13 APPENDIX 3, 12/19/95) (NO SEPERATE PAY ITEM).

6. WHERE A SANITARY SEWER PARALLELS AND IS WITHIN THREE HORIZONTAL METERS OF A WATER LINE. THE SEWER SHALL BE CONSTRUCTED OF CAST IRON, DUCTILE IRON, OR PVC MEETING ASTM SPECIFICATIONS WITH A PRESSURE RATING FOR BOTH THE PIPE AND JOINTS OF 1035 KPA. (NO SEPERATE PAY ITEM) (TNRCC 12/19/95).

7. DUE TO FEDERAL REGULATIONS TITLE 49, PART 192.181, CPS MUST MAINTAIN ACCESS TO GAS VALVES AT ALL TIMES. THE CONTRACTOR MUST PROTECT AND WORK AROUND ANY GAS VALVES THAT ARE IN THE PROJECT AREA.

8. WHENEVER POWER POLES ARE ADJACENT TO THE PROPOSED SANITARY SEWER, THE CONTRACTOR SHALL PROVIDE PROPER SHORING OR OTHER SUITABLE SUPPORT DURING CONSTRUCTION OF SANITARY SEWER, IN WHICH METHODS MUST BE APPROVED BY THE UTILITY COMPANY MAINTENANCE DEPARTMENT.

9. THE CONTRACTOR SHALL BE RESPONSIBLE FOR DISCONNECTING EACH EXISTING SERVICE LINE FROM THE EXISTING MAIN AND RECONNECTING THE SERVICE TO THE NEW SEWER MAIN. THE CONTRACTOR SHALL BE RESPONSIBLE FOR MAINTAINING CONTINUOUS SERVICE (NO SEPARATE PAY ITEM).

10. AFTER CONSTRUCTION, TESTING WILL BE DONE BY TV CAMERA USING SAWS FORCES AND OBSERVED BY THE INSPECTOR, SEWER MAINTENANCE PERSONNEL AND THE CONTRACTOR AS THE CAMERA IS RUN THROUGH THE LINES. ANY ABNORMALITIES, SUCH AS BROKEN PIPE, OR MISALIGNED JOINTS, MUST BE REPLACED BY THE CONTRACTOR AT HIS EXPENSE.

11. THE CONTRACTOR IS RESPONSIBLE TO ENSURE THAT NO OVER FLOW OR SPILLAGE OF SEWAGE OCCURS. SHOULD THIS OCCUR, THE CONTRACTOR SHALL:

    A. IDENTIFY THE SOURCE OF A SPILL AND ATTEMPT TO ELIMINATE ANY ADDITIONAL SPILLAGE. NOTIFY CONSTRUCTION INSPECTIONS.
    B. CONTAIN THE SPELL AND PLACE AND AVOID CONTAMINATION OF STREAMS.
    C. CLEAN UP THE SPILL AND DISPOSE OF CONTAMINATED MATERIALS.
    D. DISINFECT THE AREA OF THE SPILL WITH A MIXTURE OF HTH CHLORINE AND WATER.
    E. IDENTIFY AND TRAIN PERSONAL RESPONSIBLE FOR SPILL PREVENTION AND CONTROL.

12. CONTRACTOR TO SUPPORT AND KEEP INTACT STORM DRAINS AND INLET STRUCTURES. ANY DAMAGES INCURRED WILL BE AT THE CONTRACTOR'S EXPENSE.

13. ALL MANHOLES, RINGS AND COVERS SHALL BE WATER TIGHT IN ACCORDANCE WITH THE SANITARY SEWER SPECIAL SPECIFICATIONS.

14. THE CONTRACTOR SHALL NOT PLACE ANY WASTE MATERIALS IN THE 100-YEAR FLOOD PLAIN WITHOUT FIRST OBTAINING AN APPROVED FLOOD PLAIN DEVELOPMENT PERMIT.

15. THE CONTRACTOR SHALL PROVIDE ACCESS FOR THE DELIVERY OF MAIL BY THE U.S. POSTAL SERVICE.

16. THE CONTRACTOR SHALL PROVIDE ACCESS OF RESIDENTS AND BUSINESSES.

17. ALL MAINS MUST PASS AIR TESTING AS PER THE SANITARY SEWER SPECIAL SPECIFICATIONS.

18. ALL MANHOLES REMAINING IN SERVICE SHALL BE FILLED WITH CONCRETE (CLASS "A") TO THE ADJUSTED INVERT TO MATCH THE NEWLY CONSTRUCTED SEWER LINE AS SHOWN ON THE PLANS (NO SEPARATE PAY ITEM).

19. THE CONTRACTOR SHALL PROTECT THE EXISTING SANITARY SEWER UNTIL ABANDONED.

20. THE CONTRACTOR SHALL BE RESPONSIBLE FOR MAINTAINING CONTINUOUS FLOWS AND RECONNECTING ALL EXISTING SERVICES AS PIPE IS BEING LAID.

21. THE MINIMUM RADIUS OF CURVATURE FOR ANY PIPE SHALL BE EITHER 200 FEET, OR THE MANUFACTURER'S RECOMMENDATION, WHICHEVER IS GREATER. THIS REQUIREMENT IS IN NO WAY INTENDED TO RELIEVE THE CONTRACTOR OF HIS RESPONSIBILITIES TO SUCCESSFULLY PASS THE AIR TESTING REQUIREMENTS.

22. IN PLACES WHERE SANITARY SEWERS ARE BEING RELOCATED, IT IS THE CONTRACTOR'S RESPONSIBILITY TO LOCATE THE EXISTING SERVICE CONNECTIONS. THE CONTRACTOR SHALL PLACE THE SERVICE LATERAL FORM THE PROPERTY LINE TO THE NEW SEWER LINE. (NO SEPERATE PAY ITEM).

23. VERTICAL STACKS REQUIRED FOR SANITARY SEWER SERVICE LATERALS ARE NOT SHOWN FOR LOCATIONS ON THE PLANS AND SHALL BE INSTALLED WHERE DIRECTED BY THE INSPECTOR.

24. THE CONTRACTOR SHALL BE REQUIRED TO EXPOSE A SUFFICIENT NUMBER OF SANITARY SEWER SERVICE LINES AT THE PROPOSED CURB LINE TO ASSURE THAT THESE LINES WILL NOT BE DAMAGED BY CONSTRUCTION OPERATIONS.

25. TEMPORARY CONNECTIONS TO EXISTING/PROPOSED SANITARY SEWERS ARE CONSIDERED SUBSIDIARY TO THE SANITARY SEWER LINE ITEM IN THE PROPOSAL (NO SEPERATE PAY ITEM).

26. CONTRACTOR SHALL BE RESPONSIBLE FOR RESTORING TO ITS ORIGINAL, OR BETTER, CONDITION FROM DAMAGES DONE TO EXISTING FENCES, CURBS, OR CONCRETE DRIVEWAYS (NO SEPARATE PAY ITEM).

27. ALL MAINS MUST PASS AIR TEST PER THE SANITARY SEWER SPECIAL SPECIFICATIONS.

28. CONTRACTOR AND/OR CONTRACTOR'S INDEPENDENTLY RETAINED EMPLOYEE OR STRUCTURAL DESIGN/GEOTECHNICAL/SAFETY/EQUIPMENT CONSULTANT, IF ANY, SHALL REVIEW THESE PLANS AND AVAILABLE GEOTECHNICAL INFORMATION AND THE ANTICIPATED INSTALLATION SITE(S) WITH THE PROJECT WORK AREA IN ORDER TO IMPLEMENT CONTRACTOR'S TRENCH EXCAVATION SAFETY PROTECTION SYSTEMS, PROGRAMS, AND/OR PROCEDURES FOR THE PROJECT DESCRIBED IN THE CONTRACT DOCUMENTS. THE CONTRACTOR'S IMPLMENTATION OF THESE SYSSTEMS, PROGRAMS AND/OR PROCEDURES SHALL PROVIDE FOR ADEQUATE TRENCH EXCAVATION SAFETY PROTECTION THAT COMPLY WITH, AS A MINIMUM, OSHA STANDARDS FOR TRENCH EXCAVATIONS, SPECIFICALLY, CONTRACTOR AND/OR CONTRACTOR'S INDEPENDENTLY RETAINED EMPLOYEE OR SAFETY CONSULTANT SHALL IMPLEMENT THE PRESENCE AND ACTIVITIES OF INDIVIDUALS WORKING IN AND AROUND TRENCH EXCAVATION.

29. THESE PLANS ARE IN ACCORDANCE WITH:
    A: TEXAS DEPARTMENT OF TRANSPORTATION (TXDOT) STANDARD SPECIFICATION
    B: THE TEXAS HEALTH DEPARTMENT'S DESIGN CRITERIA FOR SEWERAGE SYSTEMS.

30. ALL SANITARY SEWER LINES LESS THAN ONE METER BELOW SUBGRADE SHALL BE CONCRETE ENCASED UNLESS OTHERWISE NOTED.

31. ALL MATERIALS SHALL BE APPROVED BY TXDOT. CONSTRUCTION PROCEDURE WITHIN THE SCOPE OF THIS CONTRACT SHALL CONFORM TO ALL APPLICABLE TXDOT CONSTRUCTION SPECIFICATIONS. THE USE OF ASBESTOS CEMENT AND PERMA-LOC PIPE WILL BE PROHIOBITED UNDER THIS CONTRACT.

32. NO EXTRA PAY ITEM SHALL BE ALLOWED FOR WORK CALLED FOR ON THE PLANS BUT NOT INCLUDED ON THE BID SCHEDULE. THIS INCIDENTAL WORK WILL BE REQUIRED AND SHALL BE INCLUDED IN THE PAY ITEM TO WHICH IT RELATES.

33. WHEN SEWER CUTS ARE MORE THAN FOUR METERS OF COVER, USE EXTRA-STRENGTH PIPE - 12.45 mm MINIMUM THICKNESS FOR 300mm PIPE (NO SEPERATE PAY ITEM).

34. ALL EXCAVATIONS SHALL BE UNCLASSIFIED AND SHALL INCLUDE ALL MATERIALS ENCOUNTERED, REGARDLESS OF THEIR NATURE OR THE MANNER IN WHICH THEY ARE REMOVED.

35. CONTRACTOR SHALL PRESERVE ALL CONSTRUCTION STAKES, MARKS,ETC. ANY CONSTRUCTION STAKES, MARKS, ETC. DESTROYED OR REMOVED BY THE CONTRACTOR OR HIS EMPLOYEES SHALL BE REPLACED AT THE CONTRACTOR'S EXPENSE.

36. THE CONTRACTOR SHALL PROVIDE EROSION CONTROL TO PREVENT POLLUTION OF STORM WATERS ORIGINATING UP GRADIENT AND PREVENT DOWNSTREAM POLLUTION BY CONTAMINATED STORM WATER RUNOFF FROM THE SITE. THIS WORK SHALL BE PERFORMED AS DIRECTED BY THE ENGINEER AND IN ACCORDANCE WITH THE TXDOT GENERAL NOTES AND SPECIFICATION DATA.

37. ALL DUCTILE IRON PIPE USED IN THIS SYSTEM SHALL BE CORROSION PROTECTED ON BOTH THE INTERIOR AND EXTERIOR SURFACES. INTERIOR SURFACES SHALL BE CEMENT OR MORTAR WITH ASPHALTIC COATING, TAR, EPOXY, PVC OR EQUIVALENT. (NO SEPERATE PAY ITEM).

38. CONTRACTOR SHALL BE RESPONSIBLE FOR ALL TEMPORARY CONNECTIONS BETWEEN NEW AND EXISTING LINES AS REQUIRED TO COORDINATE WITH THE PHASED CONSTRUCTION OF THE PROPOSED ROADWAY.

39. CONTRACTOR SHALL MAINTAIN THE INTECRITY OF EXISTING WATER LINES AND THRUST BLOCKING WHEN EXCAVATING NEAR OR BENEATH EXISTING FACILITIES.

40. SELECT BEDDING REQUIRED FOR FLEXIBLE PIPE SHALL BE CONSIDERED SUBSIDIARY TO THE PIPE COST (NOT A SEPARATE ITEM).

41. ALL DIMENSIONS ARE TO BE +/- 10MM IN COMMERCIALLY AVAILABLE SIZES.

SUMMARY

EST.	UNIT	DESCRIPTION
294	M	SAN. SEWER (200mm) 3--4 M DEPTH
6	EA.	SAN. SEWER (MANH.) (RING & COVER) WTR TIGHT
1	EA.	SAN. SEWER ADJUST MANHOLE
2	EA.	SAN. SEWER ABANDON MANHOLE
0.2	M3	SAN. SEWER CONCRETE CRADLE
44	M2	SAN. SEWER CUT & RESTORE PAVEMENT
294	M	SAN. SEWER TRENCH EXCAVATION PROTECTION
2	M	SAN. SEWER (150mm) LAT SEVICE CONN.
159	M	SAN. SEWER (ABANDON SWR LINE) (200mm)

The seal appearing on this document was authorized by Carl Bain P.E. 56996, on MAY 2,1997

STATE OF TEXAS
CARL BAIN
56996
REGISTERED
PROFESSIONAL ENGINEER

NO.	DATE	REVISION	APPROV.

Texas Department of Transportation
LOOP 1604

SANITARY SEWER
GENERAL NOTES

BAIN MEDINA BAIN, INC.
ENGINEERS & SURVEYORS
San Antonio, Texas

Designed	DIST	FED REG	FEDERAL AID PROJECT			HIGHWAY
Checked	15	6				LP1604
Drawn	COUNTY		CONTROL	SECT	JOB	SHEET
Checked	BEXAR		2452	01	035	392

NAME.DWG PLOTTING SCALE: 1000=500
DATE: 01-01-96

GENERAL NOTES:

1. VERIFY THE EXACT LOCATION OF UNDERGROUND UTILITIES AND DRAINAGE STRUCTURE WHETHER SHOWN ON PLANS OR NOT

TELEPHONE COMPANY CABLE LOCATOR	1-800-828-5127
C.P.S. LOCATOR	978-3500
SAN ANTONIO WATER SYSTEMS	704-7160
PARAGON CABLE LOCATOR	222-9961, EXT. 205
SOUTHWESTERN BELL TELEPHONE	954-4102

2. DISINFECT NEW MAINS BY MACHINE CHLORINATION.
3. FURNISH AND INSTALL TEMPORARY BLOW-OFFS IN ACCORDANCE WITH DETAILS PROVIDED AND JUNPER CONNECTIONS AS REQUIRED OR AS DIRECTED BY THE CONSTRUCTION INSPECTOR.
4. BENCH MARKS ARE INDICATED ON THE PLANS.
5. ALL ELEVATIONS FOR S.A.W.S. FACILITY ADJUSTMENTS SHALL BE REFERENCED FROM BENCH MARKS ESTABLISHED FOR THIS PROJECT BY TXDOT.
6. SALVAGE EXISTING FIRE HYDRANT(S) AND OTHER MATERIALS AS DIRECTED BY THE CONSTRUCTION INSPECTOR (NO SEPARATE PAY ITEM).
7. AFTER THE NEW MAINS HAVE BEEN RELEASED FOR SERVICE AND SERVICE LINES HAVE BEEN TRANSFERRED TO THE NEW MAINS, ABANDON EXISTING MAINS PER S.A.W.S. REQUIREMENTS.
8. TRENCH EXCAVATION PROTECTION SHALL BE ACCOMPLISHED AS REQUIRED BY THE PROVISIONS OF PART 1926, SUB PART-F EXCAVATIONS, TRENCH, AND SHORING OF THE OCCUPATIONAL SAFETY AND HEALTH'S STANDARD AND INTERPRETATIONS. THE CONTRACTOR SHALL ALSO COMPLY WITH THE PROVISIONS INCLUDED IN ITEM 700, TRENCH EXCAVATION PROTECTION, CITY OF SAN ANTONIO STANDARD SPECIFICATIONS FOR PUBLIC WORKS CONSTRUCTION.
9. CONTRACTOR AND/OR CONTRACTOR'S INDEPENDENTLY RETAINED EMPLOYEE OR STRUCTURAL DESIGN/GEOTECHNICAL/SAFETY/ EQUIPMENT CONSULTANT, IF ANY, SHALL REVIEW THESE PLANS AND ANY AVAILABLE GEOTECHNICAL INFORMATION AND THE ANTICIPATED INSTALLATION SITES WITHIN THE PROJECT WORK AREA IN ORDER TO DEVELOP THE CONTRACTOR'S PLANS TO IMPLEMENT THE PROJECT DESCRIBED IN THE CONTRACT DOCUMENTS. THE CONTRACTOR'S PLANS SHALL PROVIDE FOR ADEQUATE TRENCH SAFETY SYSTEMS THAT COMPLY WITH AS A MINIMUM O.S.H.A. STANDARDS FOR TRENCH EXCAVATIONS. SPECIFICALLY, CONTRACTOR AND/OR CONTRACTOR'S INDEPENDENTLY RETAINED EMPLOYEE OR SAFETY CONSULTANT SHALL DEVELOP AND IMPLEMENT A TRENCH SAFETY PROGRAM IN ACCORDANCE WITH O.S.H.A. STANDARDS GOVERNING THE PRESENCE AND ACTIVITIES OF INDIVIDUALS WORKING IN AND AROUND TRENCH EXCAVATION.
10. CONTRACTOR SHALL BE RESPONSIBLE FOR ALL TEMPORARY CONNECTIONS BETWEEN NEW AND EXISTING LINES AS REQUIRED TO COORDINATE WITH THE PHASED CONSTRUCTION OF THE PROPOSED ROADWAY.
11. MR. KEN MAHAFFEY CONSTRUCTION INSPECTION DIVISION, OR HIS DESIGNATED REPRESENTATIVE, SHALL NOTIFY AT LEAST 48 HOURS PRIOR TO STARTING CONSTRUCTION, MR. DOUGLAS WRIGHT TEXAS DEPARTMENT OF TRANSPORTATION AT 615-1110.
12. ALL DUCTILE IRON FITTINGS SHALL BE MECHANICAL JOINT CONNECTIONS UNLESS OTHERWISE SHOWN.

SUMMARY OF QUANTITIES

UNIT	DESCRIPTION	SHT: 1	2	3	TOTAL
M	PIPE WTR MAIN (DI) (300mm)	–	–	9	9
M	PIPE WTR MAIN (DI) (400mm)	306	11	16	333
M	PIPE WTR MAIN (DI) (600mm)	–	–	16	16
EA	TIE-IN (MAIN) (COMPL) (300mm)	–	–	2	2
EA	TIE-IN (MAIN) (COMPL) (400mm)	2	2	2	6
EA	TIE-IN (MAIN) (COMPL) (600mm)	–	–	2	2
EA	ADJUST EXIST. VALVE BOX	1	–	1	2
EA	STD. FIRE HYDRANT W/150mm VALVE & BOX	1	–	–	1
EA	TEMP. BLOWOFF (COMPL) (50mm)	1	1	2	4
EA	TEMP. BLOWOFF (COMPL) (100mm)	–	–	1	1
M	TRENCH EXCAVATION PROTECTION	306	67	41	414
MGR	CAST IRON FITTINGS	0.5	0.5	2.0	3
EA	HYDROSTATIC PRESSURE TEST	1	1	3	5
M3	CONCRETE CAP	–	13	–	13
EA	AUTOMATIC AIR RELEASE VALVE (COMPL) (25mm)	1	1	2	4
EA	AUTOMATIC AIR RELEASE VALVE (COMPL) (50mm)	–	–	1	1

STATE OF TEXAS
CARL BAIN
56996
REGISTERED
PROFESSIONAL ENGINEER

The seal appearing on this document was authorized by Carl Bain P.E. 56996, on MAY 2, 1997

NO.	DATE	REVISION	APPROV.

Texas Department of Transportation
LOOP 1604

WATER DISTRIBUTIOIN SYSTEM
GENERAL NOTES

BAIN MEDINA BAIN, INC.
ENGINEERS & SURVEYORS
San Antonio, Texas

Designed	DIST	FED REG	FEDERAL AID PROJECT			HIGHWAY
Checked	15	6				LP1604
Drawn	COUNTY		CONTROL	SECT	JOB	SHEET
Checked	BEXAR		2452	01	035	393

WTR-GNTS.DWG PLOTTING SCALE: 1000=500
DATE: 04-21-97

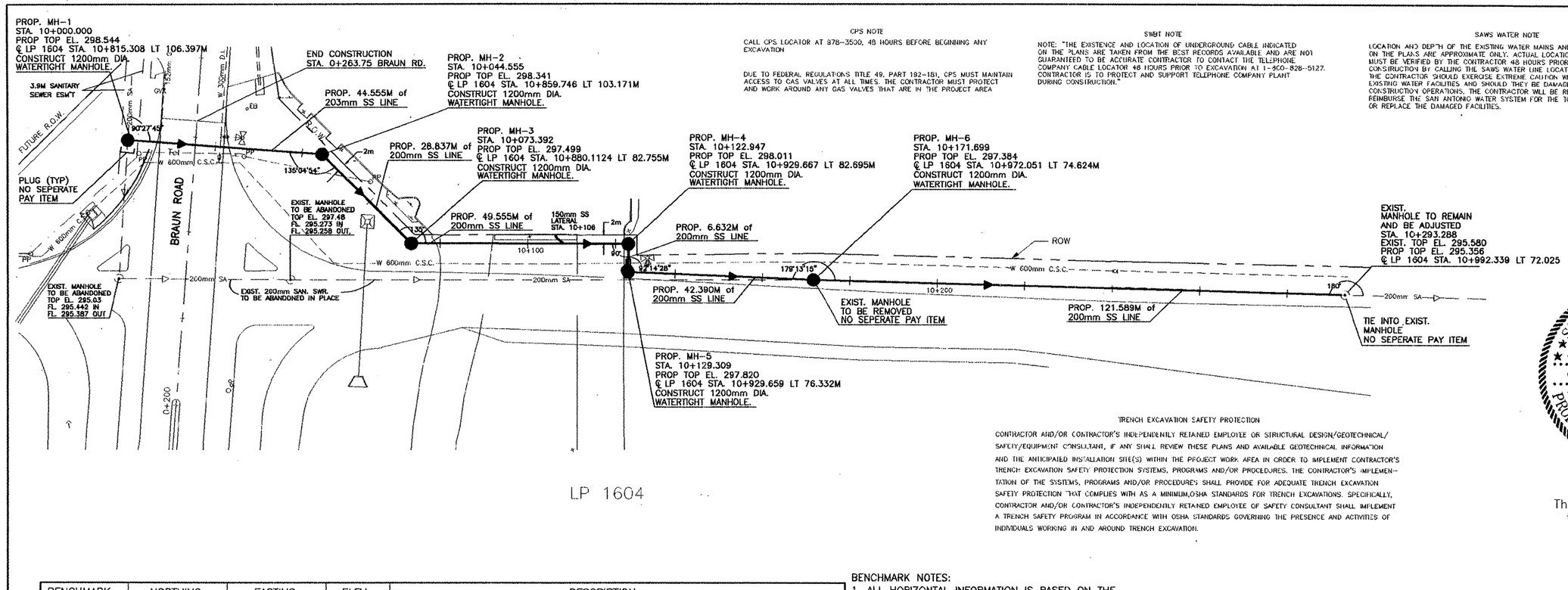

CPS NOTE

CALL CPS LOCATOR AT 978-3500, 48 HOURS BEFORE BEGINNING ANY EXCAVATION

DUE TO FEDERAL REGULATIONS TITLE 49, PART 192-181, CPS MUST MAINTAIN ACCESS TO GAS VALVES AT ALL TIMES. THE CONTRACTOR MUST PROTECT AND WORK AROUND ANY GAS VALVES THAT ARE IN THE PROJECT AREA

SWBT NOTE

NOTE: "THE EXISTENCE AND LOCATION OF UNDERGROUND CABLE INDICATED ON THE PLANS ARE TAKEN FROM THE BEST RECORDS AVAILABLE AND ARE NOT GUARANTEED TO BE ACCURATE CONTRACTOR TO CONTACT THE TELEPHONE COMPANY CABLE LOCATOR 48 HOURS PRIOR TO EXCAVATION AT 1-800-828-5127. CONTRACTOR IS TO PROTECT AND SUPPORT TELEPHONE COMPANY PLANT DURING CONSTRUCTION."

SAWS WATER NOTE

LOCATION AND DEPTH OF THE EXISTING WATER MAINS AND SERVICES SHOWN ON THE PLANS ARE APPROXIMATE ONLY. ACTUAL LOCATIONS AND DEPTHS MUST BE VERIFIED BY THE CONTRACTOR 48 HOURS PRIOR TO BEGINNING CONSTRUCTION BY CALLING THE SAWS WATER LINE LOCATOR AT 704-7167 OR 7109. THE CONTRACTOR SHOULD EXERCISE EXTREME CAUTION WHEN WORKING NEAR EXISTING WATER FACILITIES AND SHOULD THEY BE DAMAGED DURING CONSTRUCTION OPERATIONS, THE CONTRACTOR WILL BE REQUIRED TO REIMBURSE THE SAN ANTONIO WATER SYSTEM FOR THE TOTAL COST TO REPAIR OR REPLACE THE DAMAGED FACILITIES.

Scale: Hor. 1:1000
Vert. 1:100

TRENCH EXCAVATION SAFETY PROTECTION

CONTRACTOR AND/OR CONTRACTOR'S INDEPENDENTLY RETAINED EMPLOYEE OR STRUCTURAL DESIGN/GEOTECHNICAL/SAFETY/EQUIPMENT CONSULTANT, IF ANY SHALL REVIEW THESE PLANS AND AVAILABLE GEOTECHNICAL INFORMATION AND THE ANTICIPAILED INSTALLATION SITE(S) WITHIN THE PROJECT WORK AREA IN ORDER TO IMPLEMENT CONTRACTOR'S TRENCH EXCAVATION SAFETY PROTECTION SYSTEMS, PROGRAMS AND/OR PROCEDURES. THE CONTRACTOR'S IMPLEMENTATION OF THE SYSTEMS, PROGRAMS AND/OR PROCEDURES SHALL PROVIDE FOR ADEQUATE TRENCH EXCAVATION SAFETY PROTECTION THAT COMPLIES WITH AS A MINIMUM,OSHA STANDARDS FOR TRENCH EXCAVATIONS. SPECIFICALLY, CONTRACTOR AND/OR CONTRACTOR'S INDEPENDENTLY RETAINED EMPLOYEE OF SAFETY CONSULTANT SHALL IMPLEMENT A TRENCH SAFETY PROGRAM IN ACCORDANCE WITH OSHA STANDARDS GOVERNING THE PRESENCE AND ACTIVITIES OF INDIVIDUALS WORKING IN AND AROUND TRENCH EXCAVATION.

STATE OF TEXAS
CARL BAIN
56996
REGISTERED
PROFESSIONAL ENGINEER

The seal appearing on this document was authorized by Carl Bain P.E. 56996, on MAY 2, 1997

BENCHMARK	NORTHING	EASTING	ELEV.	DESCRIPTION
L-5B	4189952.2700	631232.0750	295.495	DESCRIPTION OF B.M. SET OR FOUND TXDOT DISK WITH ACCESS COVER, 91.44M LT OF STA. 10354+25 ALONG CUT OFF AT NORTHEAST CORNER OF LOOP 1604 AND BRAUN RD.

BENCHMARK NOTES:
1. ALL HORIZONTAL INFORMATION IS BASED ON THE STATE PLANE (NAD-83) COORDINATES SYSTEM.
2. ALL VERTICAL INFORMATION IS BASED ON TxDOT MONUMENTS (NGVD-29).

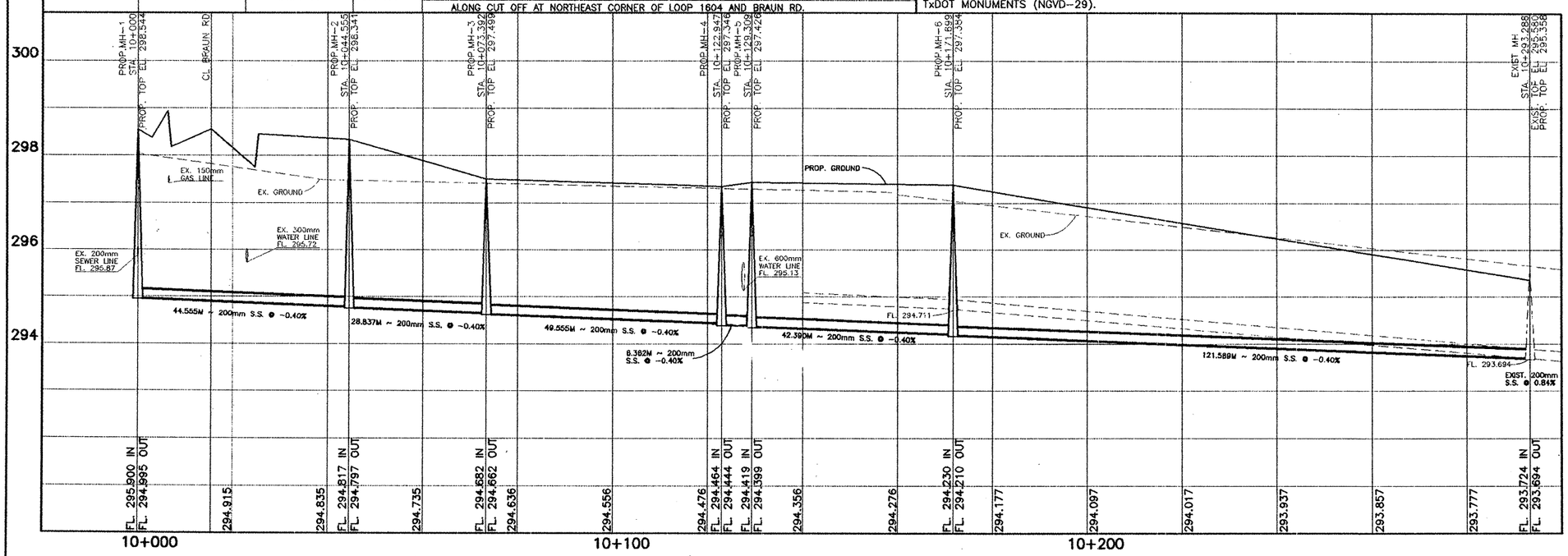

Note:
All dimensions are ± 10mm in commercially available sizes.

ESTIMATED QUANTITIESS - SHEET TOTAL

EST.	UNIT	DESCRIPTION
294	M	SAN. SEWER (200mm) 3-4 M DEPTH
6	EA.	SAN. SEWER (MANH.) (RING & COVER) WTR TIGHT
1	EA.	SAN. SEWER ADJUST MANHOLE
2	EA.	SAN. SEWER ABANDON MANHOLE
0.2	M3	SAN. SEWER CONCRETE CRADLE
44	M2	SAN. SEWER CUT & RESTORE PAVEMENT
294	M	SAN. SEWER TRENCH EXCAVATION PROTECTION
2	M	SAN. SEWER (150mm) LAT SEVICE CONN.
159	M	SAN. SEWER (ABANDON SWR LINE) (200mm)

NO.	DATE	REVISION	APPROV.

Texas Department of Transportation
LOOP 1604

LOOP 1604 SANITARY SEWER PLAN & PROFILE

BAIN MEDINA BAIN, INC.
ENGINEERS & SURVEYORS
San Antonio, Texas

Designed	DIST	FED. REG	FEDERAL AID PROJECT			HIGHWAY
Checked	15	6				LP1604
Drawn	COUNTY		CONTROL	SECT	JOB	SHEET
Checked	BEXAR		2452	01	035	394

SSPLAN.DWG PLOTTING SCALE: 1000=500
DATE: 04-18-97

NOTE "A":
A minimum of two, and maximum of four throat rings shall be used at each manhole.

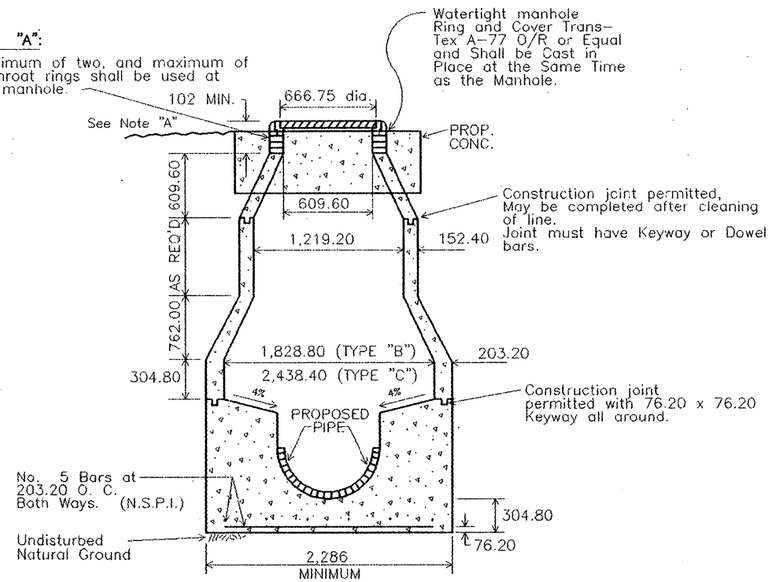

PROPOSED TYPICAL SANITARY SEWER STRUCTURE
1,828.80 & 2,438.40 MANHOLE (TYPE "B & C")

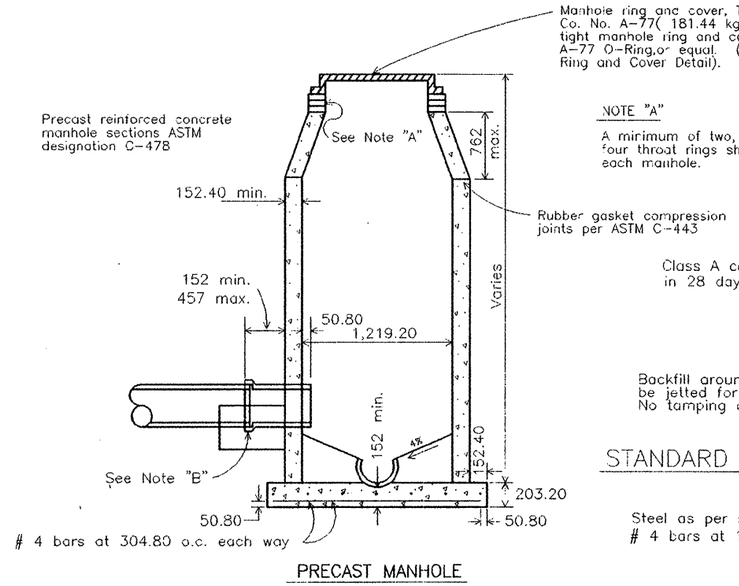

PRECAST MANHOLE

NOTE "A"
A mirimum of two, and a maximum of four throat rings shall be used at each manhole.

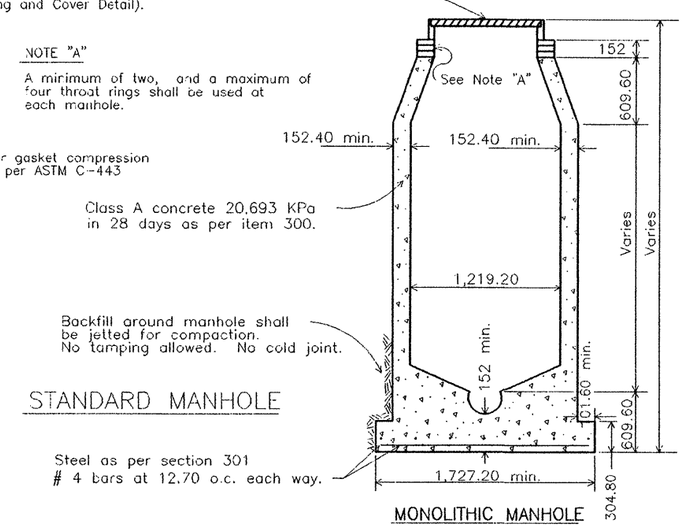

STANDARD MANHOLE

MONOLITHIC MANHOLE

NOTE "B":
Sewer pipe connecting to manholes above the lowest sewer shall project 51 mm from the inside wall, and be installed with a joint a minimum of 152 mm and a maximum of 457 mm from outside manhole wall.

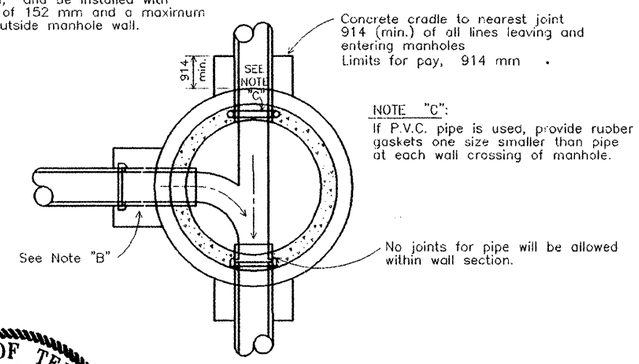

MANHOLE FLOOR PLAN

NOTE "C":
If P.V.C. pipe is used, provide rubber gaskets one size smaller than pipe at each wall crossing of manhole.

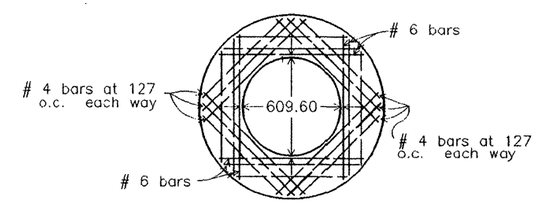

TOP SLAB

PIPE LAID IN TRENCH

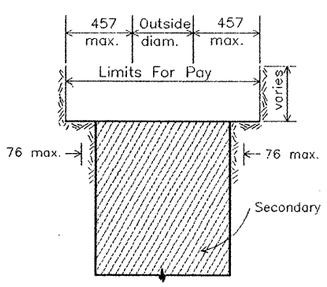

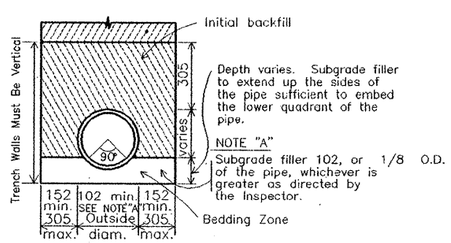

RIGID PIPE-UNSTABLE or UNACCEPTABLE CONDITIONS
FLEXIBLE PIPE-ALL CONDITIONS

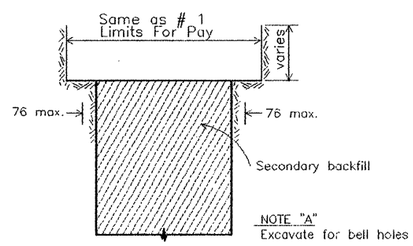

NOTE "A"
Excavate for bell holes

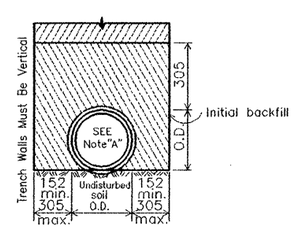

EXISTING STABLE BEDDING CONDITIONS (RIGID PIPE)

STATE OF TEXAS
CARL BAIN
56996
REGISTERED PROFESSIONAL ENGINEER

The seal appearing on this document was authorized by Carl Bain P.E. 56996, on MAY 2, 1997

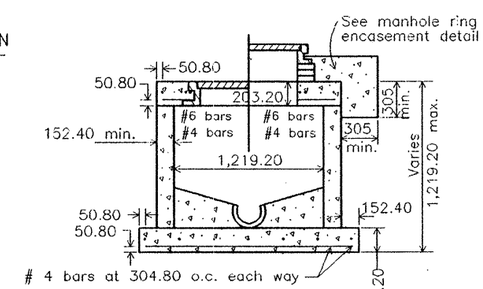

SHALLOW MANHOLE
PRECAST OR MONOLITHIC

NOTE: ALL DIMENSIONS ARE IN METRIC. (mm)
NOTE: N.S.P.I. DENOTES NO SEPARATE PAY ITEMS

NO.	DATE	REVISION	APPROV.

Texas Department of Transportation
LOOP 1604

SANITARY SEWER
STANDARD DETAILS I

BAIN MEDINA BAIN, INC.
ENGINEERS & SURVEYORS
San Antonio, Texas

Designed	DIST	FED REG	FEDERAL AID PROJECT •				HIGHWAY
Checked	15	6					LP 1604
Drawn	COUNTY			CONTROL	SECT	JOB	SHEET
Checked	BEXAR			2452	01	035	395

SHEET 1 OF 3

• Sewer-Details2.DWG PLOTTING SCALE: 1000=500
DATE: 03-13-97

CONCRETE JOINTING COLLAR

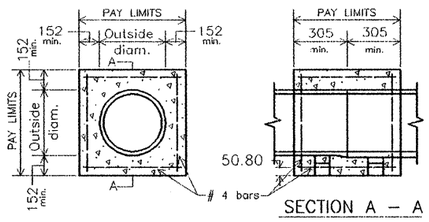

After centering pipe ends, wrap joints with 76.20 wide polyvinyl tape or rubber adapter, Can Tex. 1-70A or equal.

Pipe sections to be blocked & supported similar to encasement detail below subject to approval.

SECTION A – A

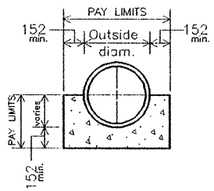

TYPICAL CONCRETE CRADLE

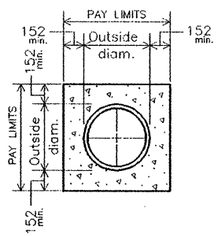

TYPICAL CONCRETE ENCASE.

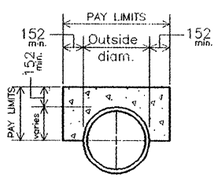

TYPICAL CONCRETE SADLE

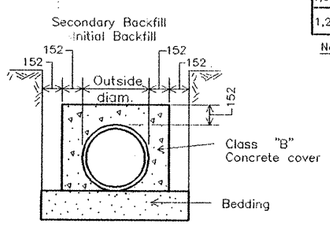

CONCRETE COVER FOR FLEXIBLE PIPE

To be used wherever trench width is greater than 609.60 mm plus O.D.

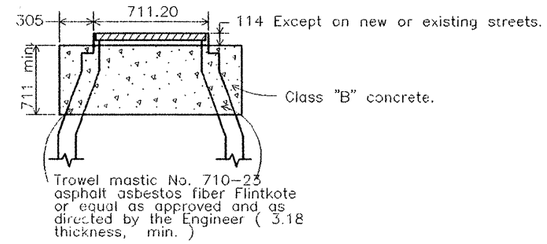

NOTE : Mannole ring encasement is required on all manholes

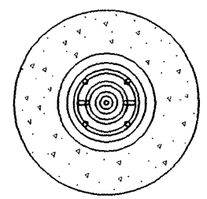

MANHOLE RING ENCASEMENT DETAIL (ALL MANHOLES)

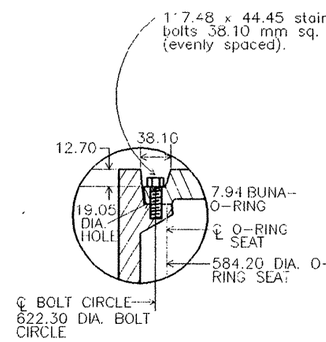

MANHOLE RING & COVER DETAIL

NOTE : Standard Manhole Ring And Cover: All applicable dimensions shall conform to the dimensions shown here.

NOTE : The Bearing Surfaces, and O-Ring Groove shall be machine ground.

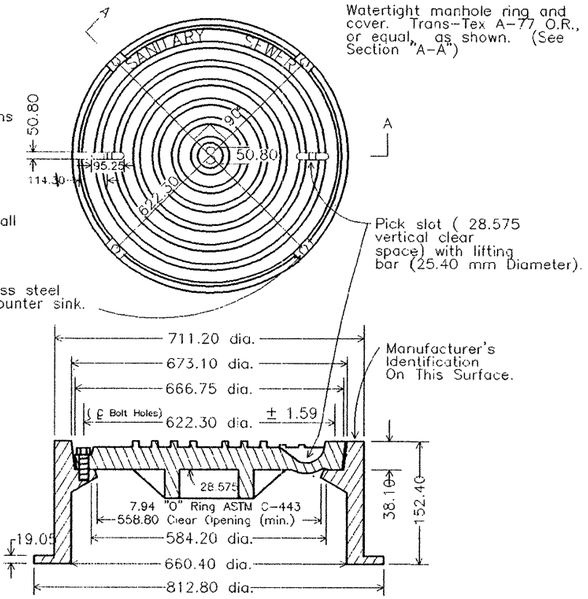

SECTION "A-A"

NOTE : All dimensions may vary except the diameter or the lid, and the diameter of the center line of the bolt holes, and the minimum diameter of the clear opening. The combined weight of the manhole ring and cover must be at least 181.44 kg

			MANDREL O. D.				RING O. D.			
SIZE	A	B	PSM (SDR-41)	PSM (SDR-35)	PSM (SDR-26)	LARGE DIA. RIBBED	PSM (SDR-41)	PSM (SDR-35)	PSM (SDR-26)	LARGE DIA. RIBBED
152.40	101.60	101.60	142.75	141.22	137.92	-------	124.71	123.19	119.89	-------
203.20	134.62	152.40	191.01	189.23	184.91	-------	172.97	171.20	166.88	-------
254.00	170.18	152.40	239.01	236.73	231.14	-------	220.98	218.69	213.11	-------
304.80	203.20	203.20	284.48	281.43	275.03	-------	266.45	263.40	257.05	-------
381.00	254.00	228.60	348.23	344.68	336.80	-------	330.20	326.64	318.77	-------
457.20	304.80	279.40	-------	421.132	-------	424.69	-------	403.60	-------	406.65
533.40	355.60	304.80	-------	496.82	-------	499.36	-------	478.79	-------	481.33
609.60	406.40	381.00	-------	558.80	-------	565.40	-------	540.77	-------	547.37
685.80	457.20	406.40	-------	629.92	-------	637.54	-------	611.89	-------	619.51
762.00	508.00	457.20	-------	-------	-------	709.68	-------	-------	-------	691.64
914.40	609.60	533.40	-------	-------	-------	854.20	-------	-------	-------	836.17
1,016.00	680.72	609.60	-------	-------	-------	950.21	-------	-------	-------	932.18
1,219.20	812.80	736.60	-------	-------	-------	1,142.75	-------	-------	-------	1,124.71

Note: Standards For All PVC Pipe Shall Conform To Minimum Of ASTM D3033.

CHART

GO, NO GO DEFLECTION TESTING MANDREL

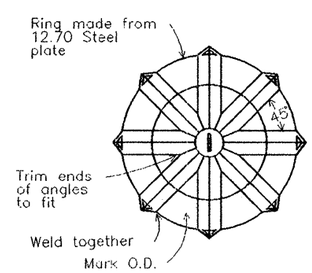

END VIEW

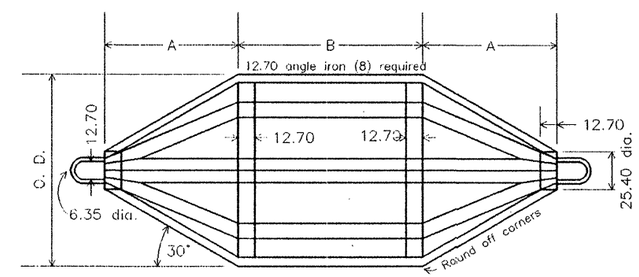

SIDE OR TOP VIEW

NOTE : After construction is completed, true O. D. dimension for the full length of "B" to 0.254 mm by tool and lathe or grinding.

NOTE: ALL DIMENSIONS ARE IN METRIC. (mm)

NOTE: N.S.P.I. DENOTES NO SEPARATE PAY ITEMS

STATE OF TEXAS
CARL BAIN
56996
REGISTERED
PROFESSIONAL ENGINEER

The seal appearing on this document was authorized by Carl Bain P.E. 56996, on MAY 2,1997

SHEET 2 OF 3

NO.	DATE	REVISION	APPROV.

Texas Department of Transportation
LOOP 1604

SANITARY SEWER
STANDARD DETAILS II

BAIN MEDINA BAIN, INC.
ENGINEERS & SURVEYORS
San Antonio, Texas

Designed	DIST	FED. REG	FEDERAL AID PROJECT			HIGHWAY
Checked	15	6				LP 1604
Drawn	COUNTY		CONTROL	SECT	JOB	SHEET
Checked	BEXAR		2452	01	035	396

Sewer-Details1.DWG PLOTTING SCALE: 1000-500 DATE: 03-13-97

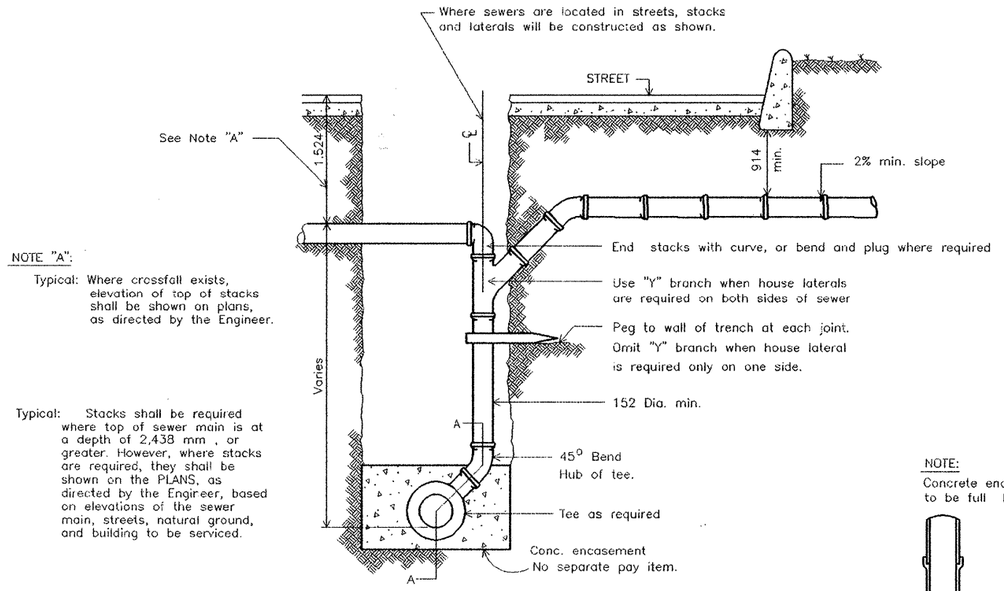

NOTE "A":

Typical: Where crossfall exists, elevation of top of stacks shall be shown on plans, as directed by the Engineer.

Typical: Stacks shall be required where top of sewer main is at a depth of 2,438 mm , or greater. However, where stacks are required, they shall be shown on the PLANS, as directed by the Engineer, based on elevations of the sewer main, streets, natural ground, and building to be serviced.

TYPICAL STACK DETAIL

NOTE:

Concrete encasement to be full length of tee.

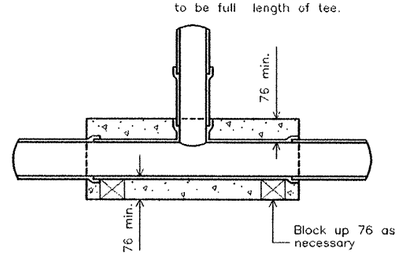

SECTION A – A

NOTE:

Depth and grade of service laterals, as shown, are typical only. Actual depth, alignment and grade of service laterals shall be determined by the Engineer based on elevations of the sewer main, street, natural ground and building to be serviced.

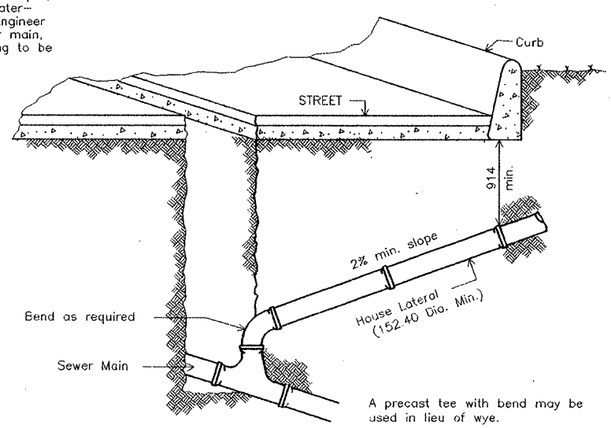

HOUSE LATERAL DETAIL

GENERAL NOTES

1. ALL CONSTRUCTION AND MATERIALS SHALL BE IN STRICT CONFORMANCE WITH TxDOT SPECIAL SPECIFICATIONS SANITARY SEWERS.
2. MANHOLE RINGS AND COVERS SHALL BE TRANS – TEX A77, OR EQUAL. WHEN WATERTIGHT MANHOLE RINGS AND COVERS ARE SPECIFIED, THEY SHALL BE TRANS – TEX A77 "O" RING, OR EQUAL.

3a. MATERIAL FOR SANITARY SEWER PIPE MUST BE THE SAME FROM MANHOLE TO MANHOLE. CHANGES IN TYPE OF PIPE MAY BE MADE, ONLY, AT MANHOLES, OR SPECIAL STRUCTURES, EXCEPT AS APPROVED BY THE SEWER ENGINEER.

b. ADAPTERS AND CONCRETE COLLARS SHALL BE USED, ONLY, AS DIRECTED BY THE ENGINEER, AND AS APPROVED BY THE SEWER ENGINEER.

4. ALL SEWER PIPE WITH LESS THAN 914 mm OF COVER SHALL BE CONCRETE ENCASED.
5. ALL FORCE MAINS SHALL BE PROVIDED WITH THRUST BLOCKS, WHERE CHANGES IN DIRECTION OCCUR, AT TEES, BENDS, CROSSES, CHANGES IN SIZE, STOPS (DEAD ENDS), VALVES AND/OR AS SHOWN BELOW, OR AS DIRECTED BY THE ENGINEER.

TYPICAL THRUST BLOCKS

N.S.P.I.

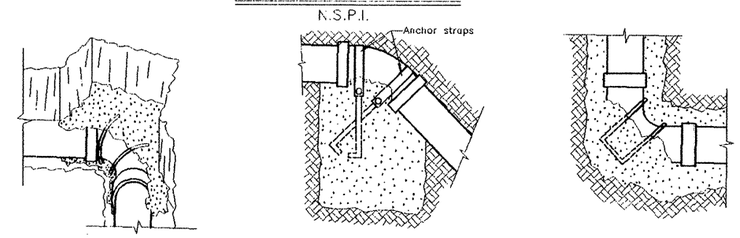

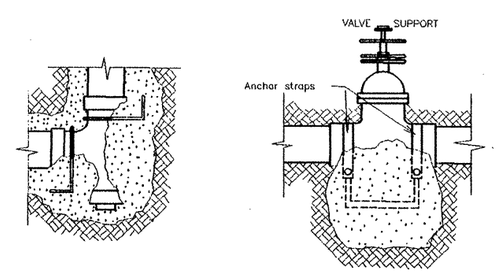

STATE OF TEXAS
CARL BAIN
56996
REGISTERED PROFESSIONAL ENGINEER

The seal appearing on this document was authorized by Carl Bain P.E. 56996, on MAY 2,1997

NOTE: ALL DIMENSIONS ARE IN METRIC. (mm)
NOTE: N.S.P.I. DENOTES NO SEPARATE PAY ITEMS

NO.	DATE	REVISION	APPROV.

Texas Department of Transportation
LOOP 1604

SANITARY SEWER
STANDARD DETAILS III

BAIN MEDINA BAIN, INC.
ENGINEERS & SURVEYORS
San Antonio, Texas

Designed	DIST	FED REG	FEDERAL AID PROJECT			HIGHWAY
Checked	15	6				LP 1604
Drawn	COUNTY		CONTROL	SECT	JOB	SHEET
Checked	BEXAR		2452	01	035	397

SHEET 3 OF 3

Sewer-Details3.DWG PLOTTING SCALE: 1000=500
DATE: 03-13-97

BENCHMARK	NORTHING	EASTING	ELEV.	DESCRIPTION
L-5B	4189952.2700	631232.0750	295.495	DESCRIPTION OF B.M. SET OR FOUND TXDOT DISK WITH ACCESS COVER, 91.44m LT. OF STA. 1035+25 ALONG CUT OFF AT NORTHEAST CORNER OF LOOP 1604 AND BRAUN RD.

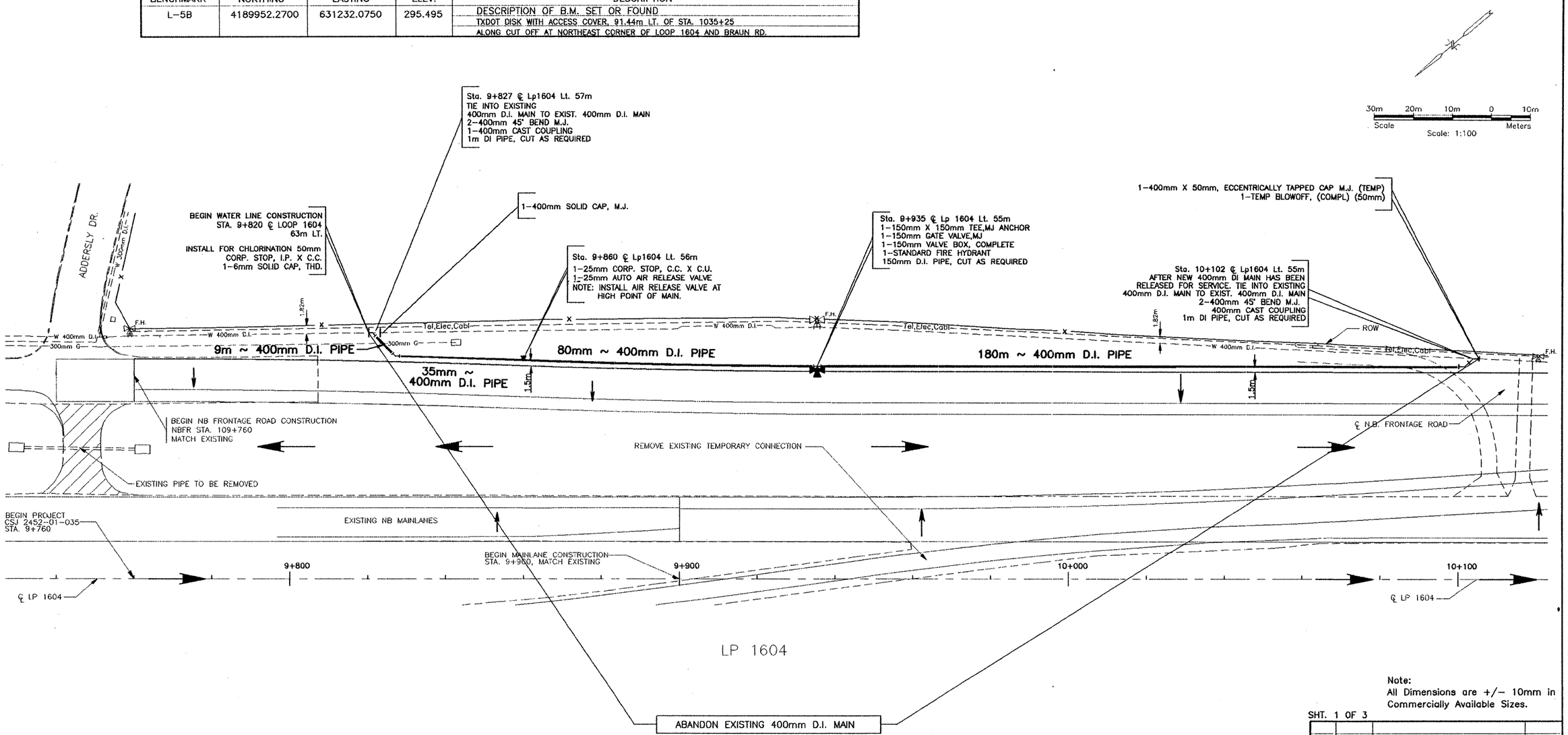

Note:
All Dimensions are +/- 10mm in Commercially Available Sizes.

SHT. 1 OF 3

NO.	DATE	REVISION	APPROV.

STATE OF TEXAS
CARL BAIN
56996
REGISTERED
PROFESSIONAL ENGINEER

The seal appearing on this document was authorized by Carl Bain P.E. 56996, on MAY 2, 1997

ESTIMATED QUANTITIES - SHEET TOTAL

EST.	UNIT	DESCRIPTION
306	M	PIPE WTR MAIN (D.I.)(400mm)
1	EA	FIRE HYDRANT W/150mm VALVE AND BOX
0.5	MGR	CAST IRON FITTINGS
306	M	TRENCH EXCAVATION PROTECTION
2	EA	TIE-IN(MAIN)(400mm)
1	EA	HYDROSTATIC PRESSURE TEST
1	EA	TEMP BLOW-OFF(COMPL)(50mm)
1	EA	ADJUST EXISTING VALVE BOX
1	EA	AUTO AIR RELEASE VALVE (COMPL) 25mm

Texas Department of Transportation
LOOP 1604

WATER DISTRIBUTION SYSTEM
IMPROVEMENT PLANS

BAIN MEDINA BAIN, INC.
ENGINEERS & SURVEYORS
San Antonio, Texas

Designed	DIST	FED REG	FEDERAL AID PROJECT				HIGHWAY
Checked	15	6	CO 2452-01-035				LP 1604
Drawn	COUNTY			CONTROL	SECT	JOB	SHEET
Checked	BEXAR			2452	01	035	39B

Water-Sheet1.DWG PLOTTING SCALE: 1000=1000
DATE: 04-21-97

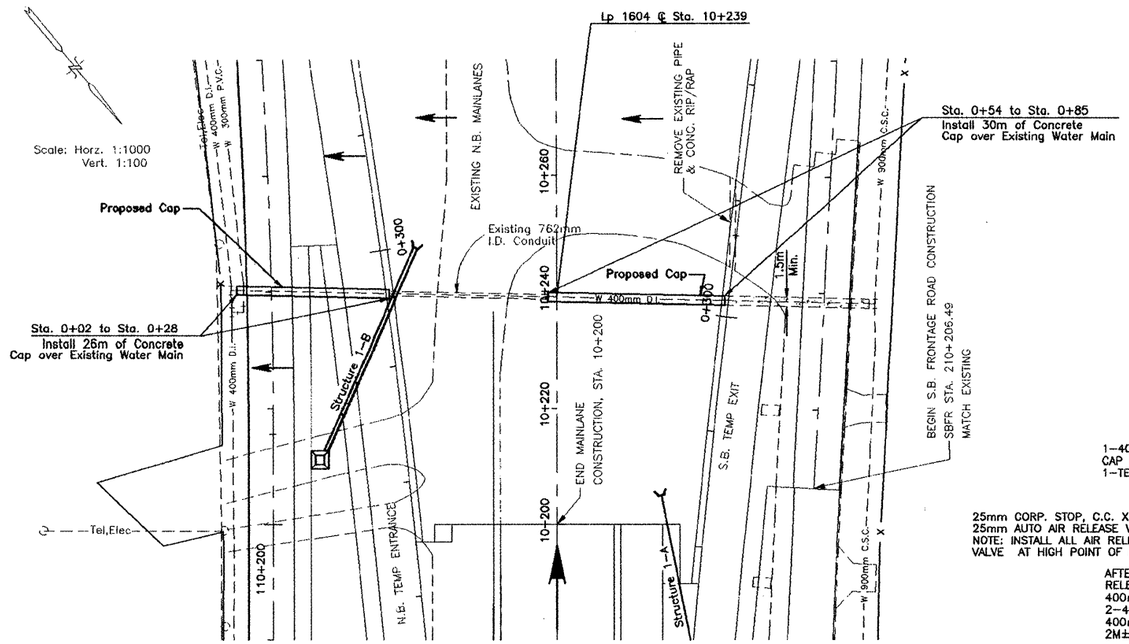

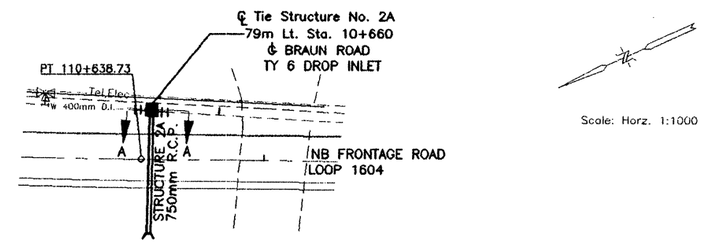

PLAN VIEW

CL STA. 10+660 LOOP 1604

Scale: Horz. 1:1000

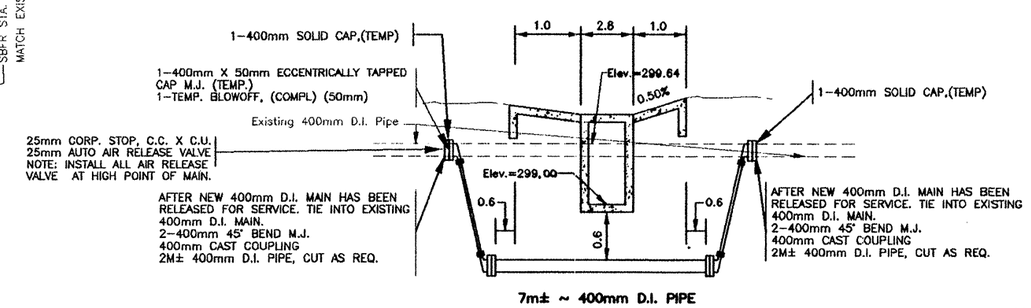

SECTION A-A
CROSSING AT STRUCTURE No. 2A
AT LP 1604 CL STA. 10+660 LT 79M

Note:
All Dimensions are +/- 10mm in Commercially Available Sizes.

BENCHMARK	NORTHING	EASTING	ELEV.	DESCRIPTION
L-5B	4189952.2700	631232.0750	295.495	DESCRIPTION OF B.M. SET OR FOUND TXDOT DISK WITH ACCESS COVER, 91.44m LT. OF STA. 1035+25 ALONG CUT OFF AT NORTHEAST CORNER OF LOOP 1604 AND BRAUN RD.

BENCHMARK NOTES:
1. ALL HORIZONTAL INFORMATION IS BASED ON THE STATE PLANE (NAD-83) COORDINATES SYSTEM.
2. ALL VERTICAL INFORMATION IS BASED ON TxDOT MONUMENTS (NGVD-29).

SHT. 2 OF 3

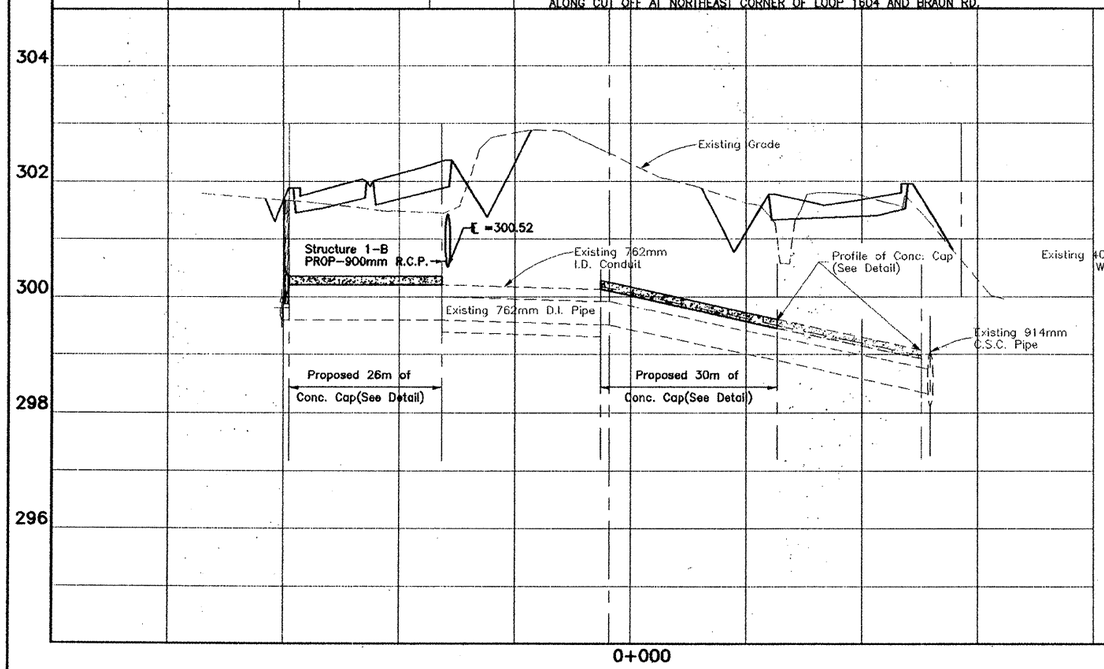

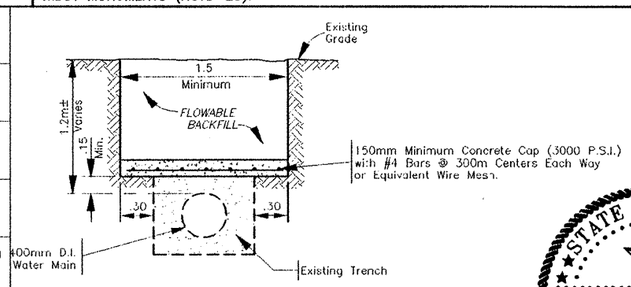

Concrete Cap Detail

STATE OF TEXAS
CARL BAIN
56996
REGISTERED PROFESSIONAL ENGINEER

The seal appearing on this document was authorized by Carl Bain P.E. 56996, on MAY 2, 1997

EST.	UNIT	DESCRIPTION
13	M3	CONCRETE CAP
67	M	TRENCH EXCAVATION PROTECTION
11	M	PIPE WTR MAIN (D.I.) PIPE (400mm)
1	EA	AUTOMATIC AIR RELEASE VALVE (COMP) (25mm)
1	EA	TEMP BLOWOFF (COMPL) (50mm)
0.5	MGR	CAST IRON FITTINGS
2	EA	TIE-IN (MAIN) (400mm)
1	EA	HYDROSTATIC PRESSURE TEST

ESTIMATED QUANTITIES - SHEET TOTAL

NO.	DATE	REVISION	APPROV.

Texas Department of Transportation
LOOP 1604

WATER DISTRIBUTION SYSTEM IMPROVEMENT PLANS

BAIN MEDINA BAIN, INC.
ENGINEERS & SURVEYORS
San Antonio, Texas

Designed	DIST	FED REG	FEDERAL AID PROJECT •	HIGHWAY
Checked	15	6		LP 1604

Drawn	COUNTY	CONTROL	SECT	JOB	SHEET
Checked	BEXAR	2452	01	035	399

Water-Sheet.DWG PLOTTING SCALE: 1000=1000
DATE: 04-21-97

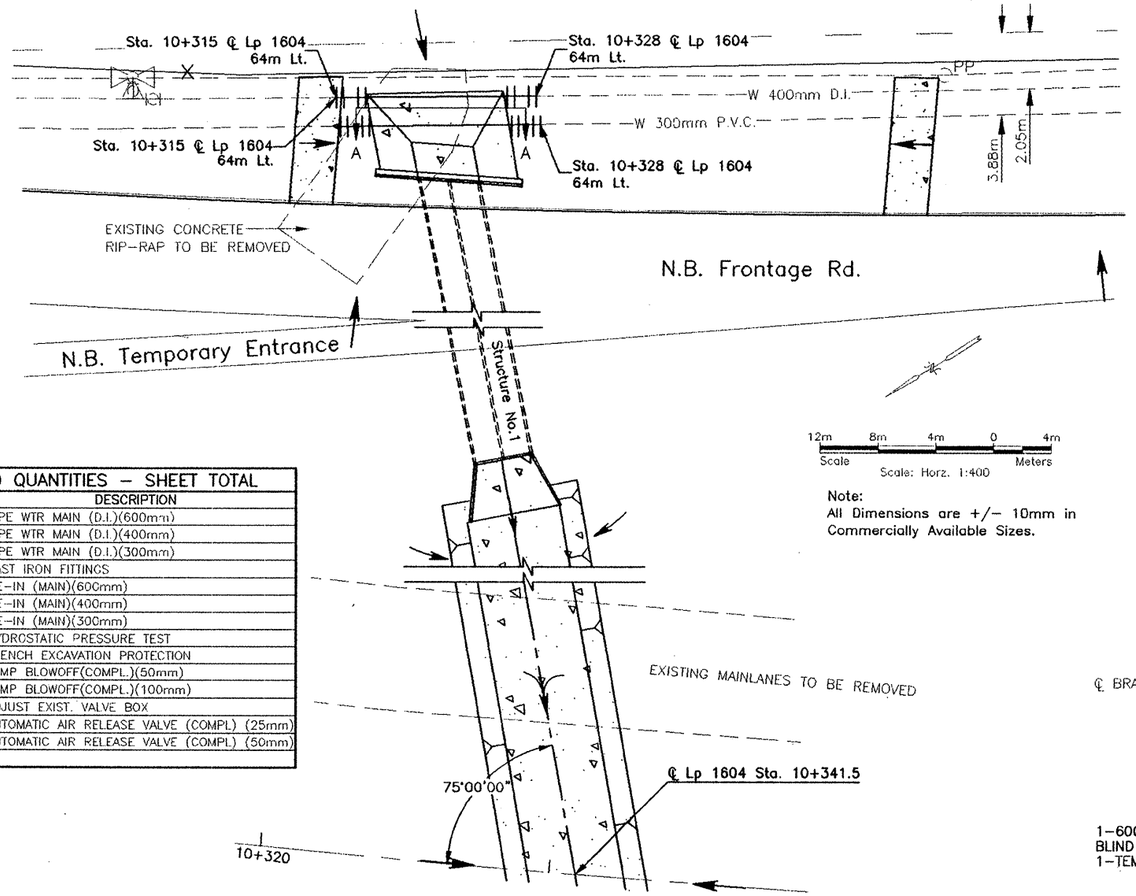

Note:
All Dimensions are +/- 10mm in Commercially Available Sizes.

ESTIMATED QUANTITIES – SHEET TOTAL		
EST.	UNIT	DESCRIPTION
9	M	PIPE WTR MAIN (D.I.)(600mm)
16	M	PIPE WTR MAIN (D.I.)(400mm)
16	M	PIPE WTR MAIN (D.I.)(300mm)
2.0	MGR	CAST IRON FITTINGS
2	EA	TIE-IN (MAIN)(600mm)
2	EA	TIE-IN (MAIN)(400mm)
2	EA	TIE-IN (MAIN)(300mm)
3	EA	HYDROSTATIC PRESSURE TEST
41	M	TRENCH EXCAVATION PROTECTION
2	EA	TEMP BLOWOFF(COMPL.)(50mm)
1	EA	TEMP BLOWOFF(COMPL.)(100mm)
1	EA	ADJUST EXIST. VALVE BOX
2	EA	AUTOMATIC AIR RELEASE VALVE (COMPL) (25mm)
1	EA	AUTOMATIC AIR RELEASE VALVE (COMPL) (50mm)

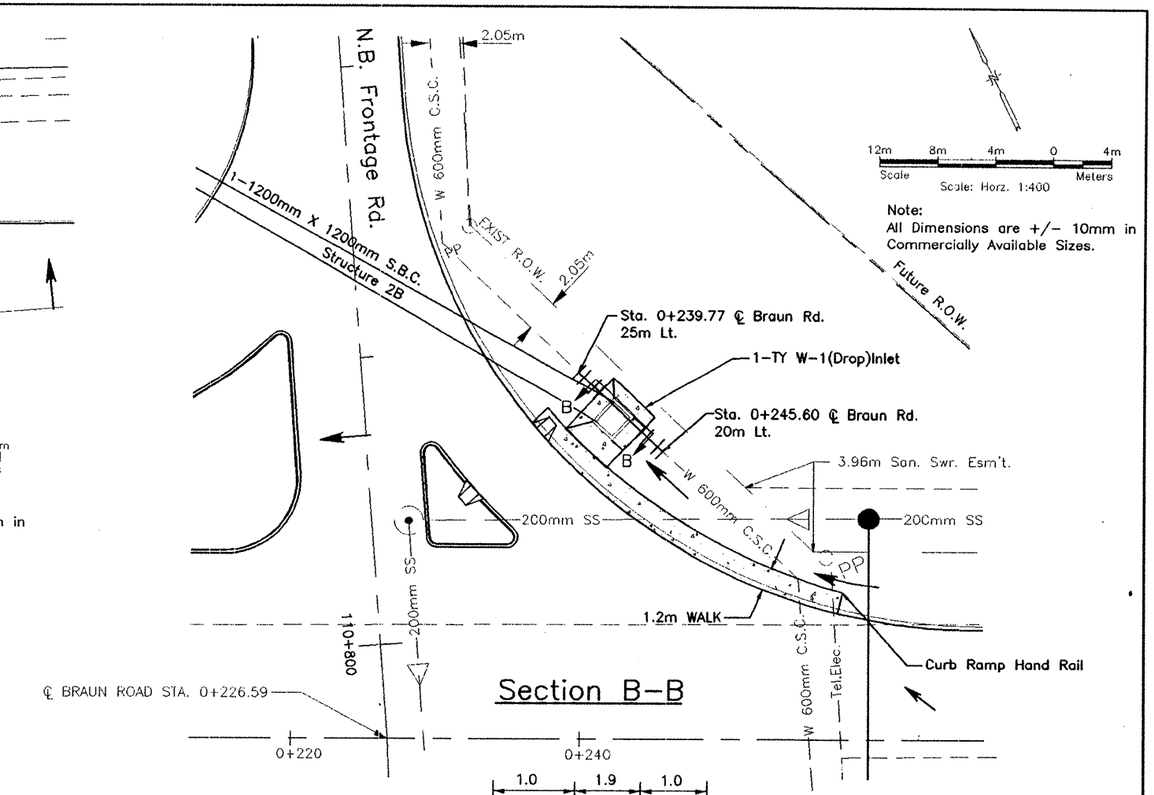

Note:
All Dimensions are +/- 10mm in Commercially Available Sizes.

Section B-B

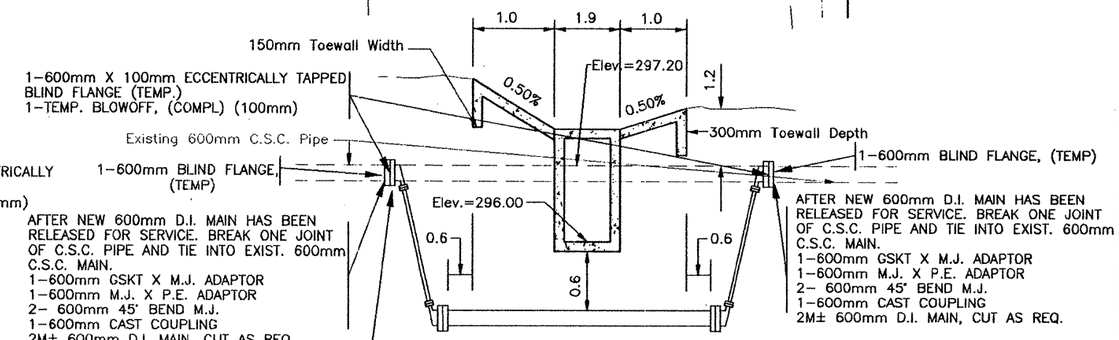

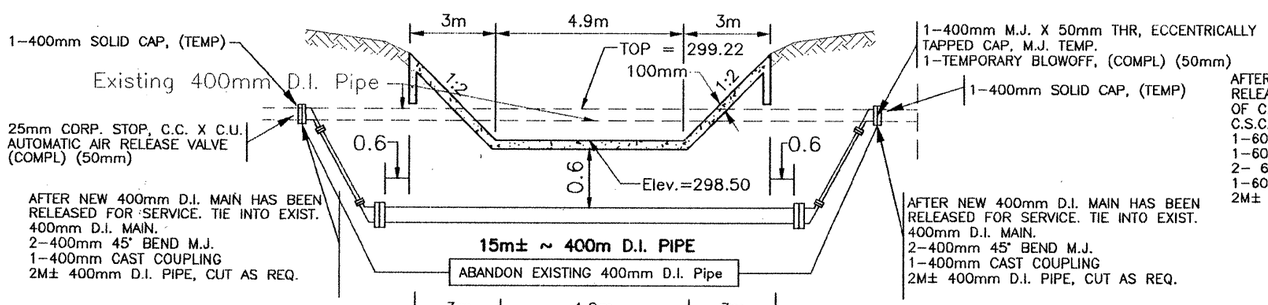

Section A-A

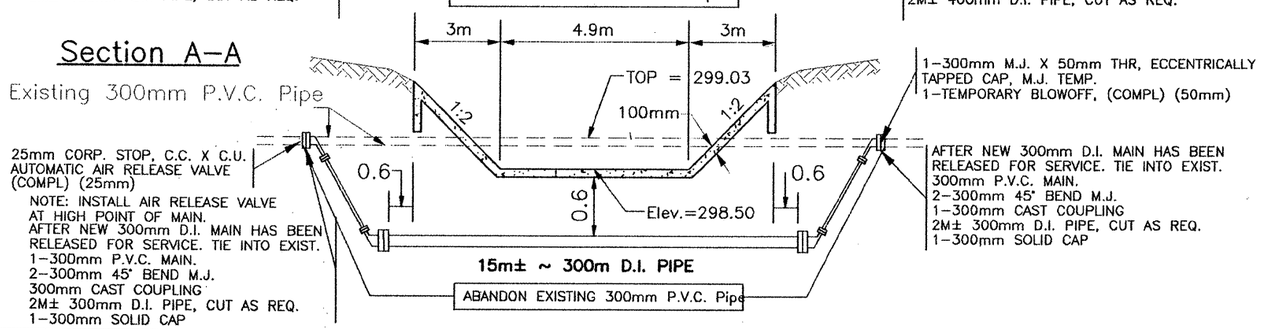

STATE OF TEXAS
CARL BAIN
56996
REGISTERED
PROFESSIONAL ENGINEER

The seal appearing on this document was authorized by Carl Bain P.E. 56996, on MAY 2, 1997

SHT. 3 OF 3

NO.	DATE	REVISION	APPROV.

Texas Department of Transportation
LOOP 1604

WATER DISTRIBUTION SYSTEM IMPROVEMENT PLANS

BAIN MEDINA BAIN, INC.
ENGINEERS & SURVEYORS
San Antonio, Texas

Designed	DIST	FED REG	FEDERAL AID PROJECT			HIGHWAY
Checked	15	6				LP 1604
Drawn	COUNTY		CONTROL	SECT	JOB	SHEET
Checked	BEXAR		2452	01	035	400

Water-Sheet3.DWG PLOTTING SCALE: 1000=1000
DATE: 04-21-97

NOTE:
1. ALL DIMENSIONS ARE + 10mm IN COMMERCIALLY AVAILABLE SIZES.
2. STEEL CASING WALL THICKNESS SHALL BE A MINIMUM OF 13mm.
3. CONTRACTOR SHALL TACK WELD A STEEL PLATE ON THE ENDS OF THE CASINGS.

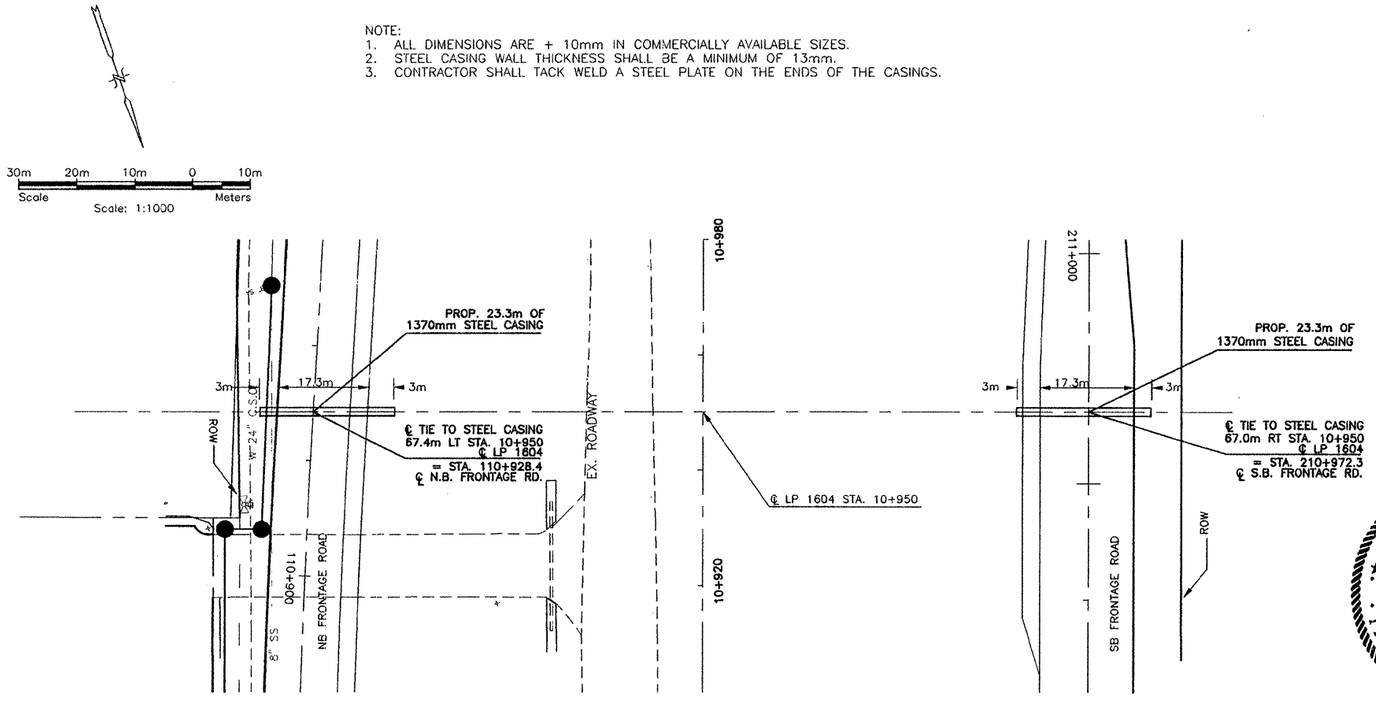

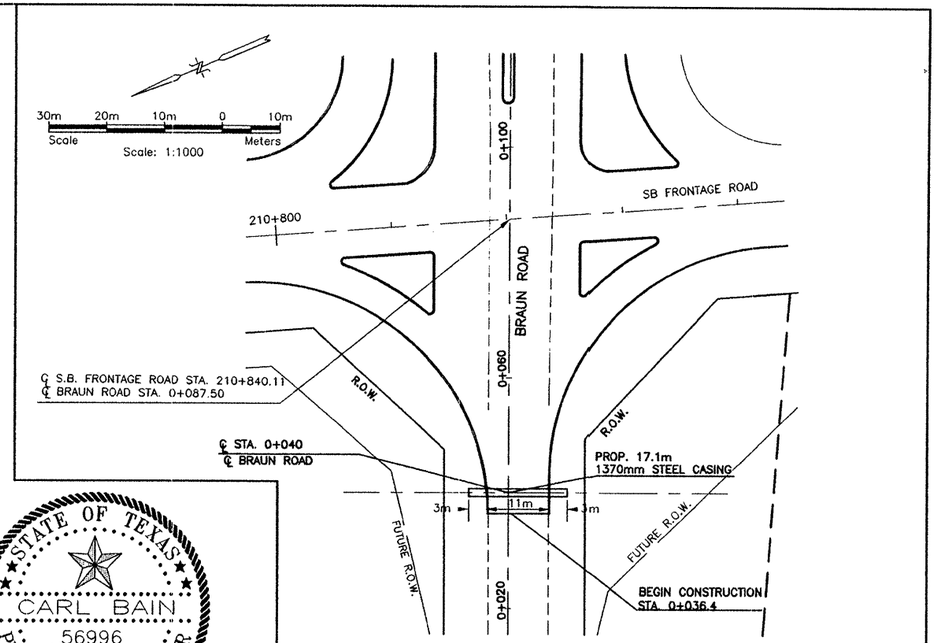

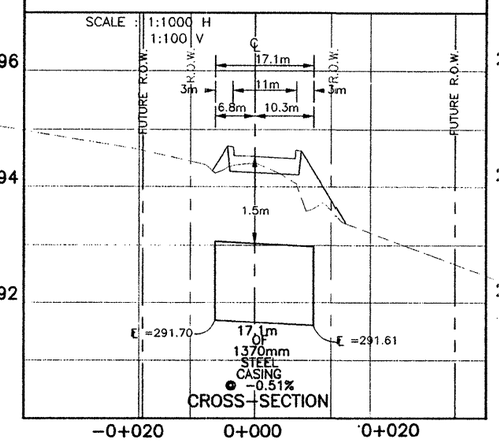

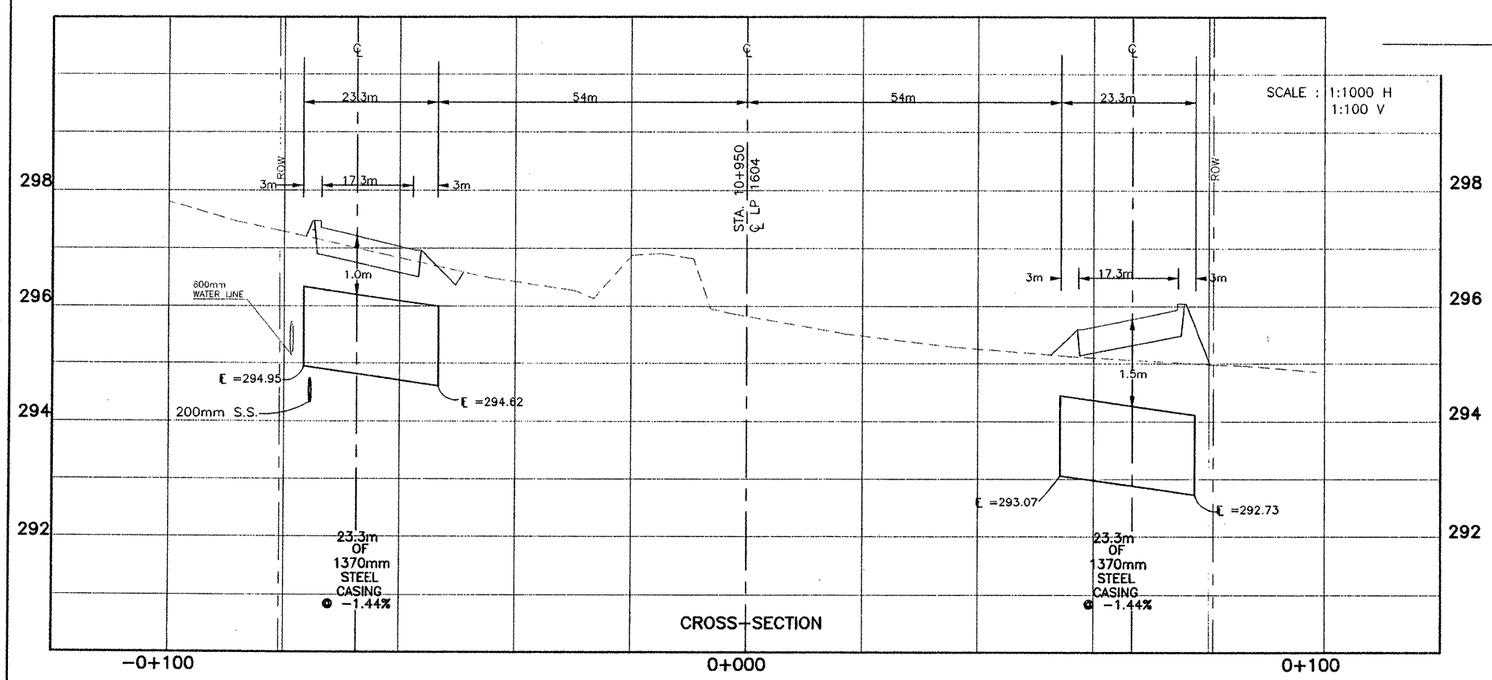

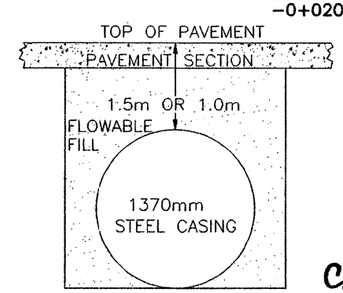

TYPICAL SECTION

STATE OF TEXAS
CARL BAIN
56996
REGISTERED
PROFESSIONAL ENGINEER

The seal appearing on this document was authorized by CARL BAIN P.E. 56996, on MARCH _____, 1998

CHANGE ORDER NO. 4

ESTIMATED QUANTITIES – SHEET TOTAL		
EST.	UNIT	DESCRIPTION
63.7	m	STEEL CASING (1370 mm)
63.7	m	TRENCH EXCAVATION PROTECTION

NO.	DATE	REVISION	APPROV.

Texas Department of Transportation
LOOP 1604

WATER LINE CASINGS AT BRAUN ROAD PLAN & PROFILE

BAIN MEDINA BAIN, INC.
ENGINEERS & SURVEYORS
San Antonio, Texas

Designed	DIST	FED REG	FEDERAL AID PROJECT	HIGHWAY
Checked	15	6	C02452-1-35	LP1604

Drawn / Checked	COUNTY	CONTROL	SECT	JOB	SHEET
	BEXAR	2452	01	035	400A

EC4RPU29.DWG PLOTTING SCALE: 1000=500
DATE: 04-18-97

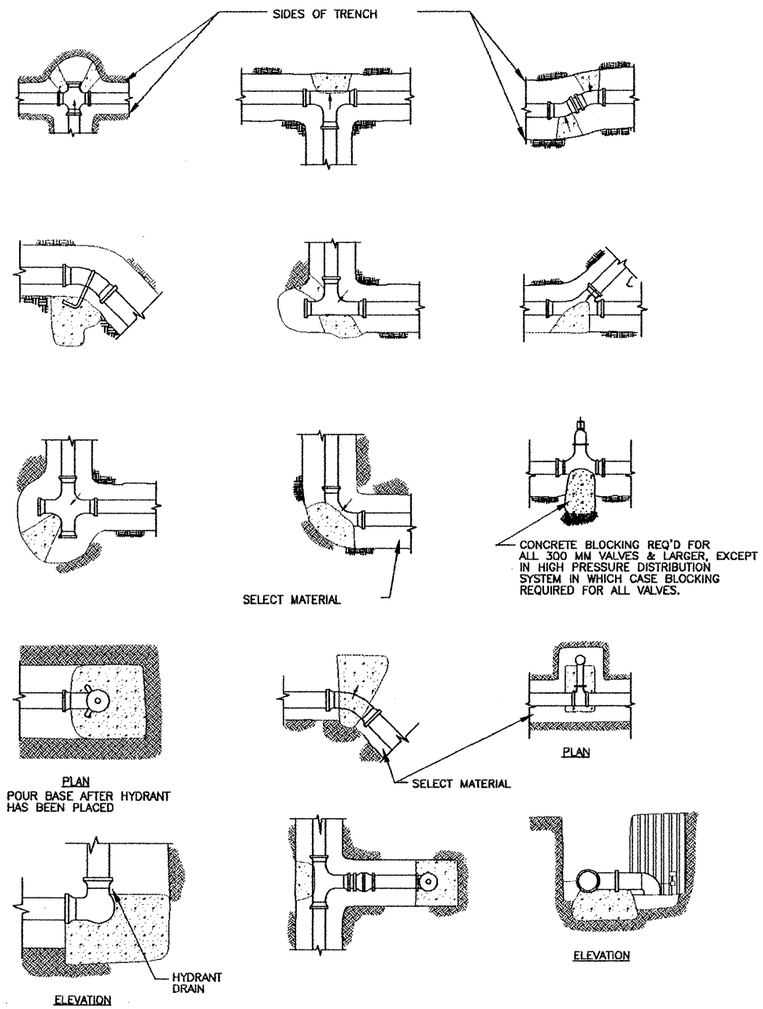

THRUST BLOCKING FOR FITTINGS

NOTE:
USE:
(A). ANCHORING TEE WITH M.J. FITTING OR M.J. VALVE.
(B). STD. M.J. TEE WITH ANCHORING COUPLING OR ANCHORING FITTING.

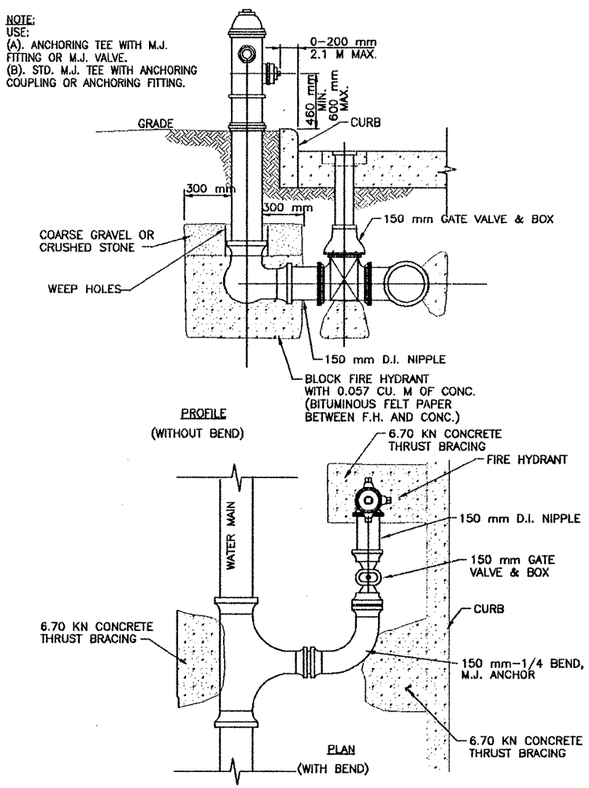

FIRE HYDRANT INSTALLATION

NOTES:
1. EMBED ALL EXTERIOR METAL SURFACES IN SAND.
2. ALL REINFORCING BARS IN THE CONCRETE REACTION BLOCK SHALL BE #4.

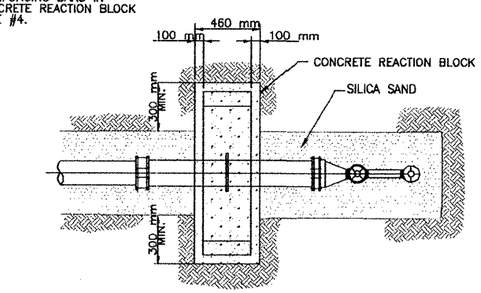

PLAN

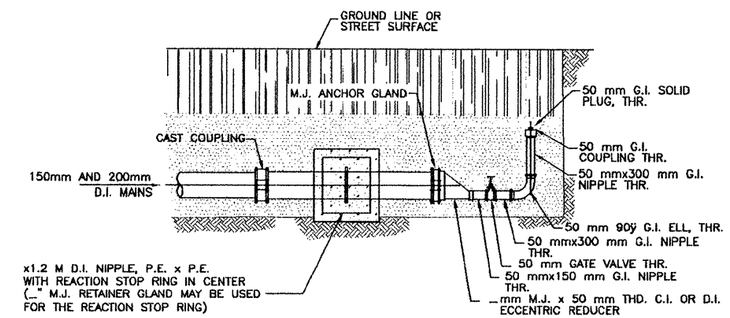

50mm TEMPORARY BLOW-OFF ASSEMBLY ON 150mm AND 200mm AC AND DI MAINS

STATE OF TEXAS
CARL BAIN
56996
REGISTERED PROFESSIONAL ENGINEER

The seal appearing on this document was authorized by Carl Bain P.E. 56996, on MAY 2, 1997

NO.	DATE	REVISION	APPROV.

Texas Department of Transportation
LOOP 1604

WATER DISTRIBUTION SYSTEM
STANDARD DETAILS I

BAIN MEDINA BAIN, INC.
ENGINEERS & SURVEYORS
San Antonio, Texas

Designed	DIST	FED REG	FEDERAL AID PROJECT		HIGHWAY
Checked	15	6	CO 2452-01-035		LP 1604
Drawn	COUNTY		CONTROL SECT	JOB	SHEET
Checked	BEXAR		2452 01	035	401

Water-Sheet.DWG PLOTTING SCALE: 1000=1000
DATE: 04-18-97

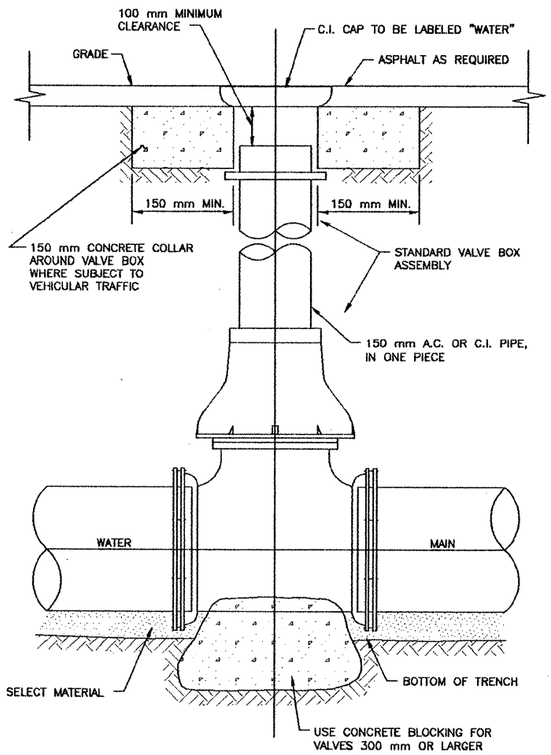

INSTALLATION OF NON-GEARED GATE VALVE WITH VALVE BOX AND EXTENSION

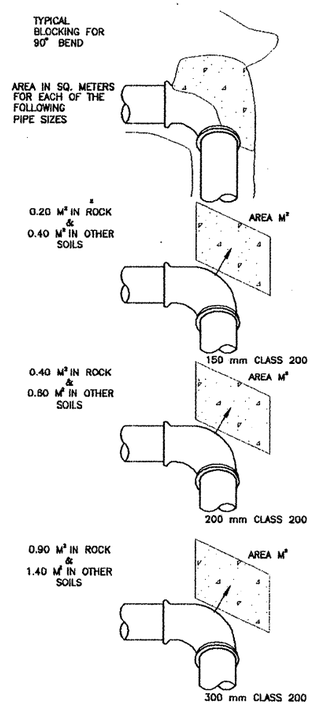

BLOCKING AREA FOR 1380 KPa TESTS & 1210 KPa WORKING PRESSURES

THRUST BLOCKING DESIGN

ON BASIS OF 1380 KPa WATER PRESSURE USED FOR TESTS, THE BLOCKING REQUIRED FOR TWO TYPES OF SOILS AS NOTED BELOW IN ONE CASE, A SOIL PRESSURE OF 34475 KPa IS USED FOR ROCK EXCAVATION AND FOR SOILS OTHER THAN ROCK. A 20685 KPa BEARING SOIL PRESSURE IS USED. THE DISTRIBUTION ON SYSTEM IS DESIGNED TO OPERATE WITH A MAXIMUM WATER PRESSURE OF 1210 KPa AND CALCULATIONS APPLY TO A.C. PIPE CLASS 200 AND DUCTILE IRON PIPE CLASS 2. P.V.C. PIPE CLASS 200 (SDR 13.5)

SQUARE METERS OF BLOCKING REQUIRED FOR ROCK EXCAVATION

SIZE PIPE	TEES & DEAD ENDS	90° BEND	45° BEND	22 1/2° BEND
150 mm	0.20	0.20	0.10	0.10
200 mm	0.30	0.40	0.20	0.10
300 mm	0.60	0.90	0.50	0.20
400 mm	1.10	1.50	0.80	0.40

SQUARE METERS OF BLOCKING REQUIRED FOR OTHER THAN ROCK EXCAVATION

SIZE PIPE	TEES & DEAD ENDS	90° BEND	45° BEND	22 1/2° BEND
150 mm	0.30	0.40	0.20	0.10
200 mm	0.40	0.60	0.40	0.20
300 mm	1.0	1.40	0.80	0.40
400 mm	1.80	2.40	1.40	0.70

ANCHORAGE AND BLOCKING SHALL BE PROVIDED IN MANNER AS INDICATED BY STD. DWGS. DD-03-00 AND DD-03-01 IN ACCORDANCE WITH SECTION 5.4 ANCHORING BLOCKING STANDARD SPECIFICATIONS FOR WATER WORKS CONSTRUCTION EXCEPT THAT 13790 KPa CONCRETE SHALL BE USED IN LIEU OF 10345 KPa CONCRETE.
TRANSIT 13790 KPa CONCRETE MIX SHALL BE USED; HOWEVER FOR SMALL VOLUME REQUIREMENTS CONCRETE MIXED AT JOB SITE WILL BE ACCEPTABLE ONLY IF A CONCRETE MIXER IS USED. ALL AGGREGATE SHALL BE CLEAN AND THE FIELD MIX SHALL BE IN THE RATIO OF 1:3:4 AND CONTAIN NOT LESS THAN 6 SACKS OF CEMENT PER CU. METER.

THRUST BLOCKING FOR HIGH PRESSURE SYSTEMS

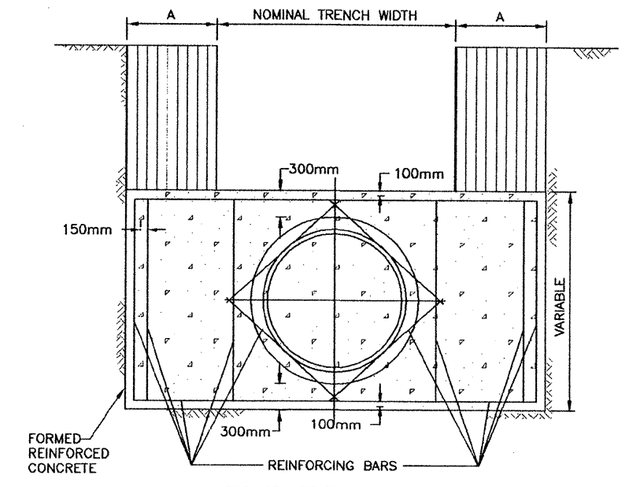

END VIEW OF REACTION BLOCK

MAIN SIZE	A (MIN.)	REINFORCING BAR SIZE	BEARING SURFACE REQUIRED (SQ. METERS)
150mm	300mm	#4	0.30
200mm	300mm	#4	0.50
300mm	450mm	#4	0.80
400mm	450mm	#4	1.20
500mm	700mm	#5	1.60
600mm	700mm	#5	2.20
760mm	910mm	#5	3.40
910mm	910mm	#5	4.80
1060mm	910mm	#5	6.70

CONCRETE REACTION BLOCK FOR BUTTERFLY VALVE AND BLOW-OFF ASSEMBLIES ON A.C., D.I., AND C.S.C. MAINS

The seal appearing on this document was authorized by Carl Bain P.E. 56996, on MAY 2, 1997

NO.	DATE	REVISION	APPROV.

Texas Department of Transportation
LOOP 1604

WATER DISTRIBUTION SYSTEM
STANDARD DETAILS II

BAIN MEDINA BAIN, INC.
ENGINEERS & SURVEYORS
San Antonio, Texas

Designed	DIST	FED REG	FEDERAL AID PROJECT			HIGHWAY
Checked	15	6	CO 2452-01-035			LP 1604
Drawn	COUNTY		CONTROL	SECT	JOB	SHEET
Checked	BEXAR		2452	01	035	402

Water-Sheet.DWG PLOTTING SCALE: 1000=1000
DATE: 04-18-97

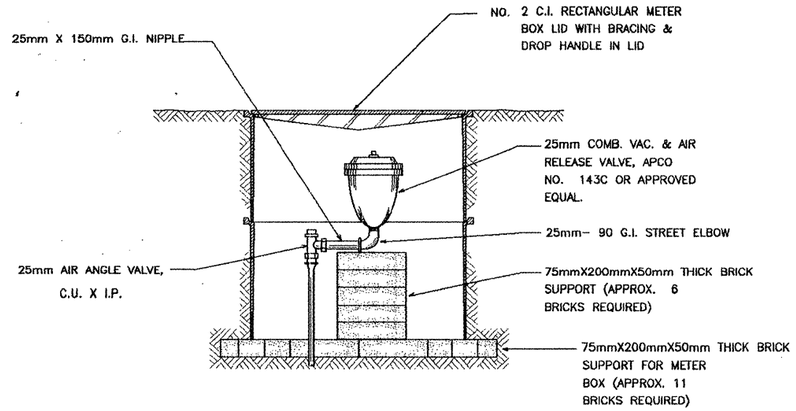

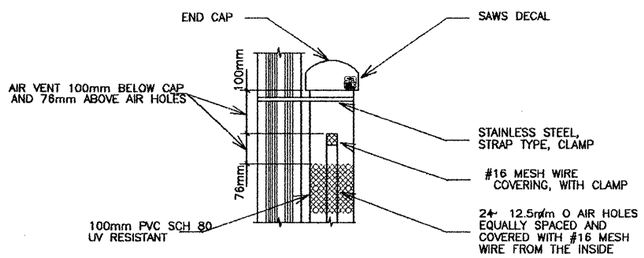

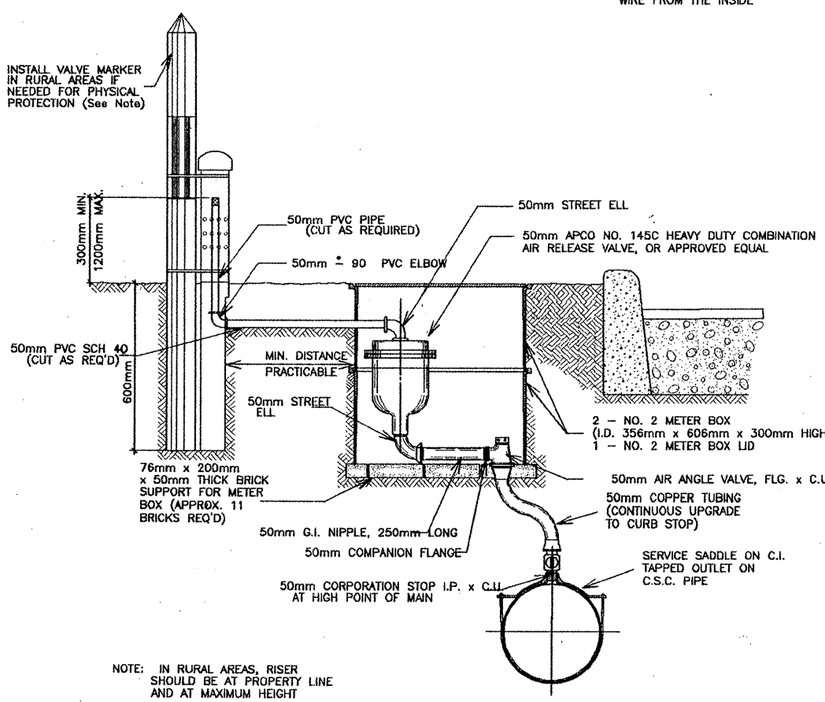

NOTE: IN RURAL AREAS, RISER SHOULD BE AT PROPERTY LINE AND AT MAXIMUM HEIGHT

NOTES:
1. EMBED ALL EXTERIOR METAL SURFACES IN SILICA SAND
2. ALL REINFORCING BARS IN THE CONCRETE REACTION BLOCK SHALL BE #5

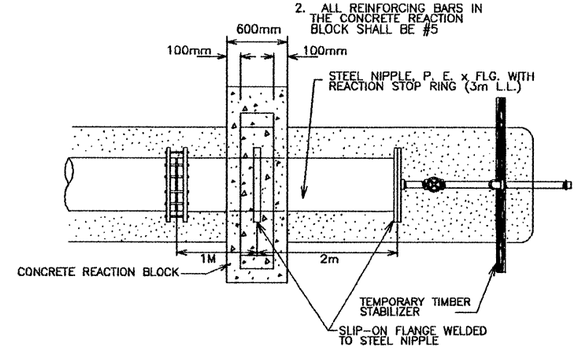

PLAN

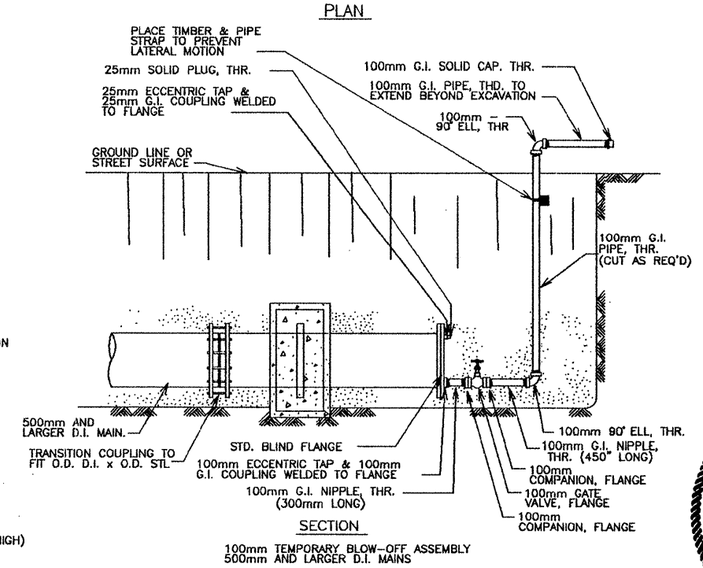

SECTION

100mm TEMPORARY BLOW-OFF ASSEMBLY
500mm AND LARGER D.I. MAINS

NOTES:
1. EMBED ALL EXTERIOR METAL SURFACES IN SILICA SAND.
2. ALL REINFORCEING BARS IN THE CONCRETE REACTION BLOCK SHALL BE # 4.

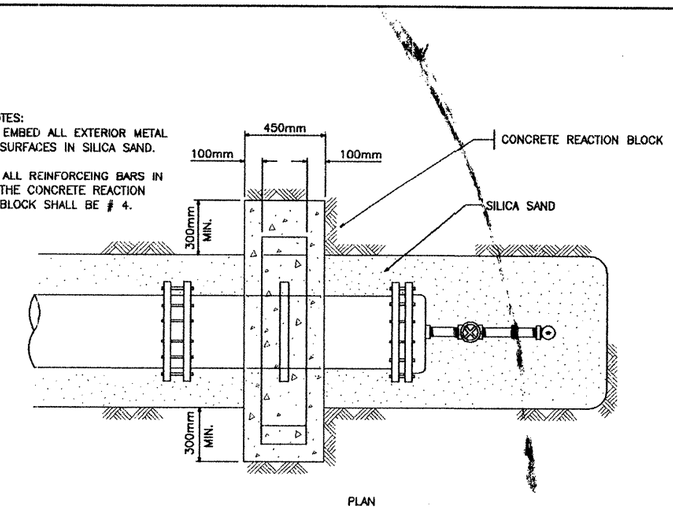

PLAN

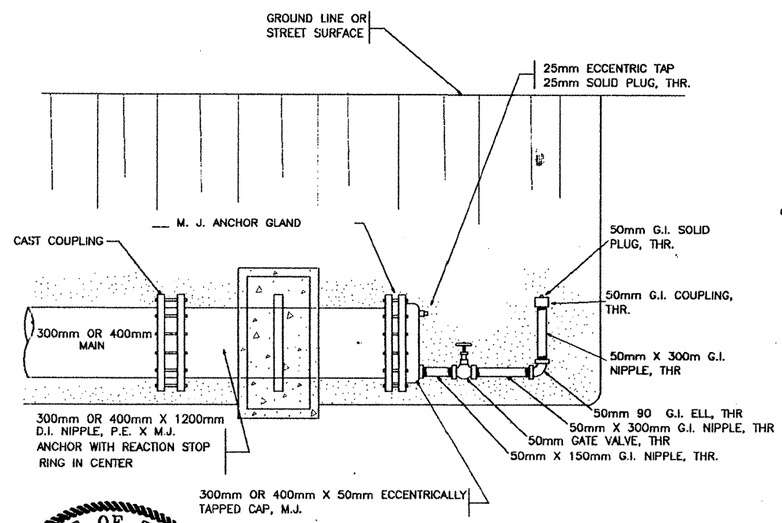

SECTION

50mm TEMPORARY BLOW-OFF ASSEMBLY
300mm–400mm D.I. MAINS

STATE OF TEXAS
CARL BAIN
56996
REGISTERED
PROFESSIONAL ENGINEER

The seal appearing on this document was authorized by Carl Bain P.E. 56996, on MAY 2, 1997

NO.	DATE	REVISION	APPROV.

Texas Department of Transportation
LOOP 1604

WATER DISTRIBUTION SYSTEM STANDARD DETAILS III

BAIN MEDINA BAIN, INC.
ENGINEERS & SURVEYORS
San Antonio, Texas

Designed	DIST	FED. REG	FEDERAL AID PROJECT •			HIGHWAY
Checked	15	6	CO 2452-01-035			LP 1604
Drawn	COUNTY		CONTROL	SECT	JOB	SHEET
Checked	BEXAR		2452	01	035	403

Water-Sheet.DWG PLOTTING SCALE: 1000=1000
DATE: 04-21-97

City Public Service
System Improvements Project
Loop 1604 Main Extensions

Project Location Map

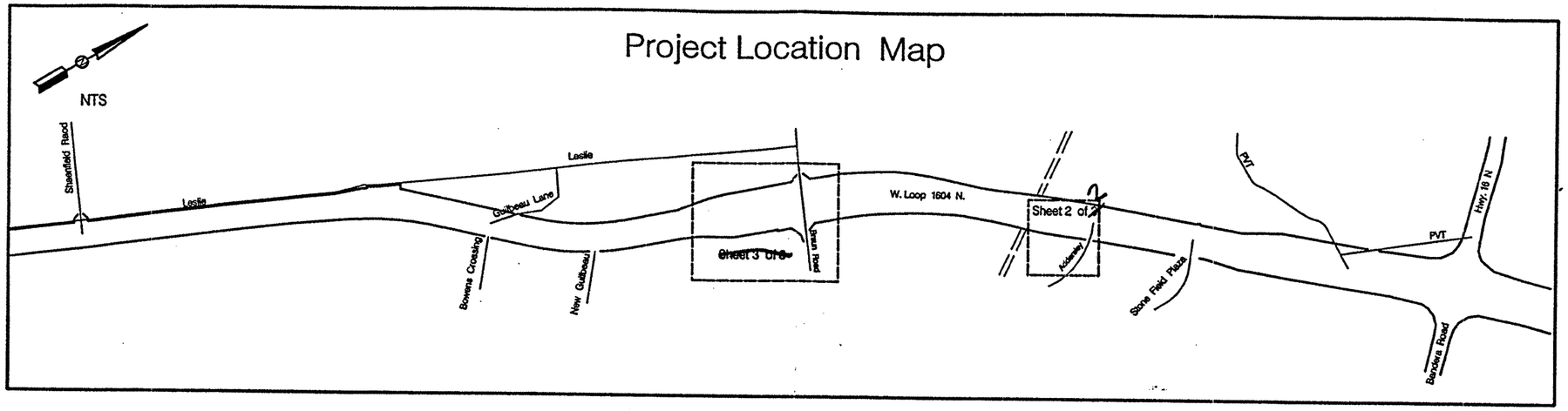

General Notes

1. All proposed gas mains are to be installed at 5'-0" of cover, minimum, unless otherwise indicated on the job sketch.
2. The location of underground utilities indicated on the job sketch are taken from the best records available and are not guaranteed to be accurate. Foreman shall verify location and depth of all existing utilities, whether shown on the plans or not, and shall be responsible for the protection of existing utilities during construction.
3. Prior to excavating, notify the following utility locators 48 hours in advance:

   S. W. B. Telephone – 1-800-828-5127
   C. P. S. Underground Electric – 978-3500
   Paragon Cable T.V. – 222-9961
   AT & T – 1-800-252-1133
   City of S.A. Traffic Signal Cable – 299-7765
   Contact Pat McGowin at – 615-5912.

4. Call Corrosion Control at 978-3235 prior to adjusting or abandoning existing gas lines.
5. [illegible] polyethylene gas services and mains are to be joined by butt fusion. Compression couplings must not be [illegible] new gas line construction, except for 4" and 6" PE-to-PE tie-ins and 2", 4" and 6" transitions from steel [illegible]
6. All joints are to be welded construction, no couplings are to be used on this job.
7. All transmission pressure welds are to be X-Rayed.
8. [illegible]struction Impact: The width of disturbance shall not be more than the width of the parkway or as stipulated by the governing entity for the area under construction.

Construction Points		Install			Remove	
From	To	Pipe Size	Length	Length Min.	Pipe Size	Length
1	2				16SP	149'
2	3	16TP	988'	5'		
4	5	6PA-SPD	542'	3' to 5'		
		Total	1,530'		Total	156'

Material Specification

Pipe: Wrapped, Grade X-42
16.00" O.D. x 0.312" WT
CPS Stock # 511075012

Fittings: 45 Deg. 3R Bend
16" O.D. x 0.250" W.T.
WPHY-52
CPS Stock # 520350059

Pressure Test
Department of Transportation
Section 192.507
Proposed M.A.O.P. 720 P.S.I.G

Pipe Size: 16TP
Test Medium: Water
Minimum Test Pressure: 1080 P.S.I.G.
Minimum Test Duration: 1 Hour
C.P.S. Required Duration: 2 Hours
Tested By: _____
Date Tested: _____

	Pressure	Ambient Temperature	Pipe Temperature
Start Test			
15 minutes			
30 minutes			
45 minutes			
60 minutes			
75 minutes			
90 minutes			
105 minutes			
End Test			

Trench Excavation Protection

Contractor and/or Contractor's independently retained employee or structural design/geotechnical/safety/equipment consultant, if any, shall review these plans and any available geotechnical information and the anticipated installation site(s) in order to develop the Contractor's plans to implement the project described in the Contract Documents. The Contractor's plans shall provide for adequate trench safety systems that comply with, as a minimum, OSHA standards for trench excavations. Contractor and/or Contractor's independently retained employee or safety consultant shall develop and implement a trench safety program in accordance with OSHA standards governing the presence and activities of individuals working in and around trench excavation.

[illegible]-SPD Pressure Test	Construction Completed	No.	Drawing Revision	Date
[illegible]um Test 90 PSIG		0	Planning Completed	02-17-98
[illegible]d To _____ PSIG	By _____			
	Center _____			
	Date _____			

Section Approval: [signature] Date Approved: 3-10-98
Division Approval: M Kotara Date Approved: 3-10-98
Map Quadrant: 102 – 620
Checked By: [signature]
Budget No. TP 120 SPD 123
Job No. 30418 – 060 30427 – 060
Job Title: Loop 1604 Main Extensions
Planned By: G. Allen x-2847

Sketch Copies	Gas Eng – 6	Gas Con – 5	Gas Op – 1	Sys Op – 1	Locate – 1	Map Rec – 1	GC Coord – 1				Contracts –	Total – 16

CITY PUBLIC SERVICE
P.O. BOX 1771
SAN ANTONIO, TX 78296

Page 1 of 2

[illegible]ject\160416tp.dgn Feb. 17, 1998 07:46:42

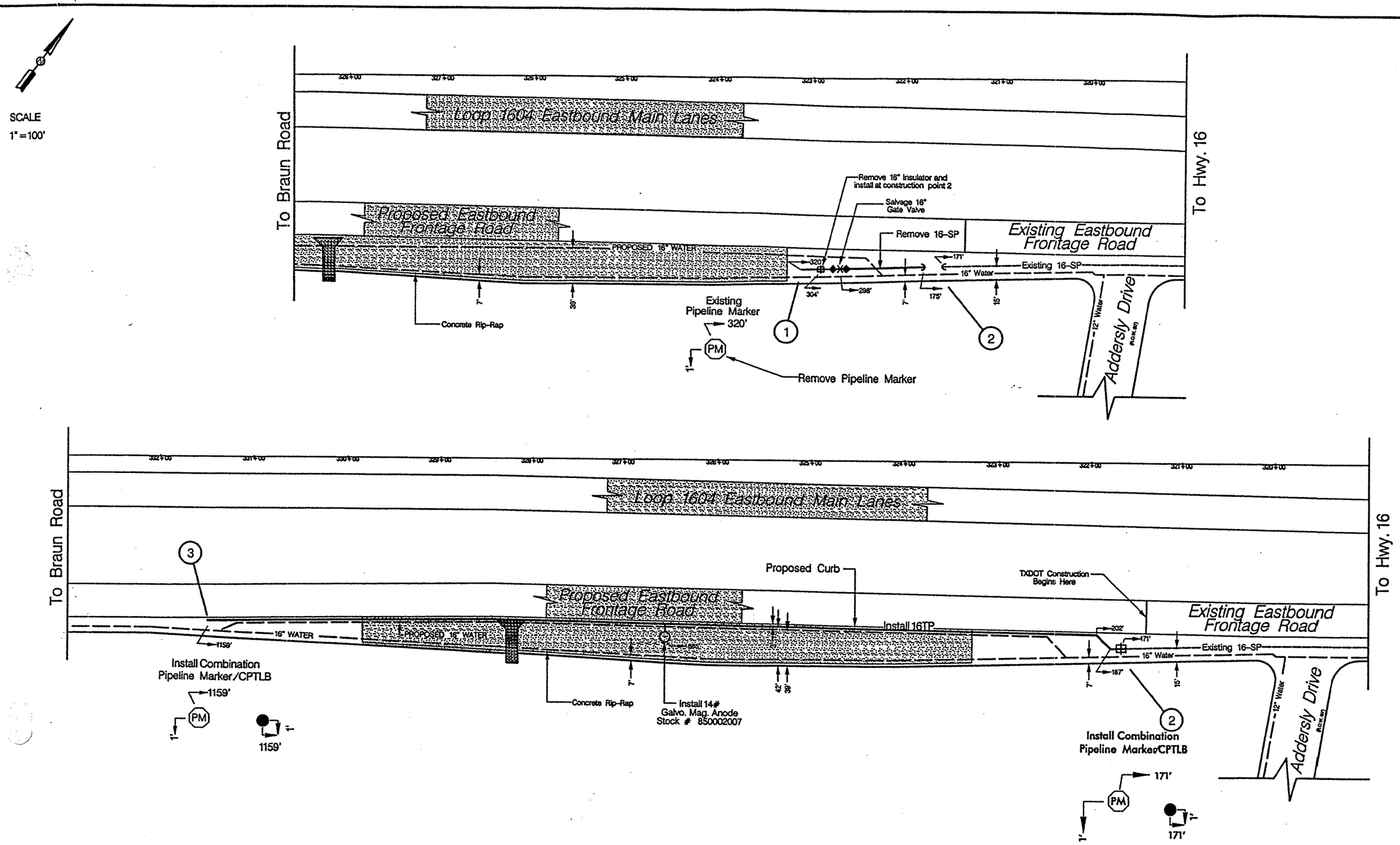

No.	Drawing Revision	Date
0	Planning Completed	02-17-98

Section Approval: [signature] Date Approved: 3-10-98
Division Approval: M Kotara Date Approved: 3-10-98
Map Quadrant: 102 - 620
Checked By: [signature]
Budget No. TP 120 SPD 123
Job No. 30418 - 060 30427 - 060
Job Title: Loop 1604 Main Extensions
Planned By: G. Allen x-2847
CITY PUBLIC SERVICE
P.O. BOX 1771
SAN ANTONIO, TX 78296

Sketch Copies: Gas Eng - 6 | Gas Con - 5 | Gas Op - 1 | Sys Op - 1 | Locate - 1 | Map Rec - 1 | GC Coord - 1 | Contracts - | Total - 16

Page 2 of 2

2452-01-035

405

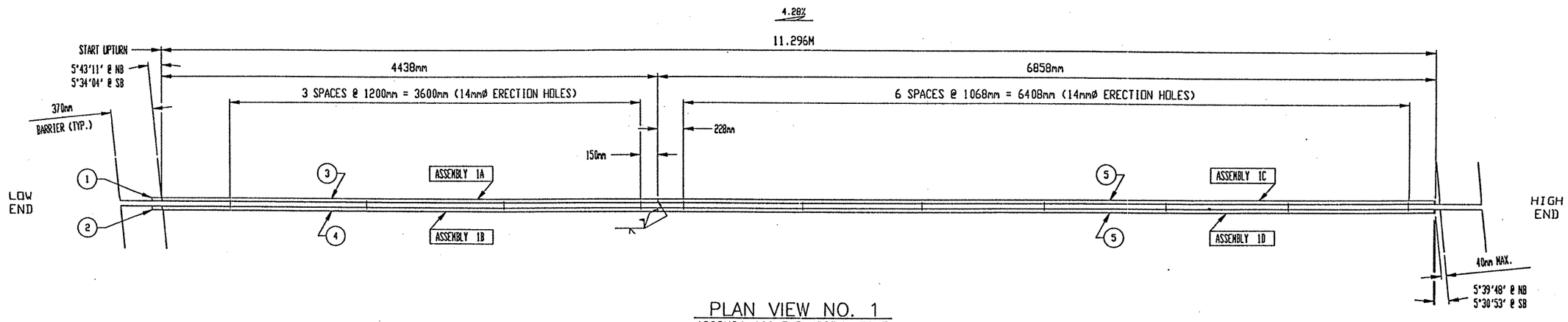

PLAN VIEW NO. 1

'SSCM2'-400 EXPANSION JOINT
LOOP 1604 - NORTHBOUND & SOUTHBOUND
ABUTMENT NO. 1
- LOOKING UPSTATION -
(2) JOINTS TOTAL

N

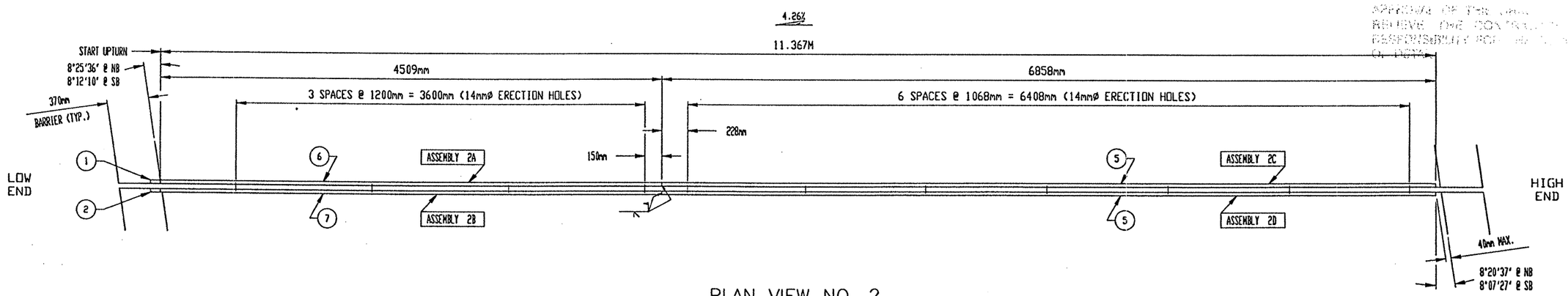

PLAN VIEW NO. 2

'SSCM2'-400 EXPANSION JOINT
LOOP 1604 - NORTHBOUND & SOUTHBOUND
ABUTMENT NO. 4
- LOOKING UPSTATION -
(2) JOINTS TOTAL

N

TEXAS DEPARTMENT OF TRANSPORTATION
DEC 19 1997
APPROVAL OF THIS DOCUMENT DOES NOT RELIEVE THE CONTRACTOR OF ALL RESPONSIBILITY FOR THE ACCURACY OF DATA.

D.S. BROWN 97-02721-14756 SHEET 1 OF 2

ONE SHOP SPLICE (EXCLUDING UPTURN SPLICES) WILL BE PERMITTED IN EACH ASSEMBLY, PROVIDED NO PIECE IS LESS THAN 610mm IN LENGTH AND SUFFICIENT STUDS ARE ADDED TO LIMIT THE STUDS TO SHOP OR FIELD SPLICE DISTANCE TO 51mm MIN. & 102mm MAX. SHOP SPLICES TO BE LOCATED AS NEEDED.

EXPANSION JOINTS FABRICATED BY:
DELTEX STEEL FABRICATING COMPANY
CONROE, TEXAS 77303
OR
THE D.S. BROWN COMPANY
NORTH BALTIMORE, OHIO 45872

DSB FILE NO: 97-02721\SHT-01

THE D.S.BROWN COMPANY
300 E. CHERRY ST. P.O. BOX 158
NORTH BALTIMORE, OHIO 45872-0158

CONTRACTOR: ACME BRIDGE COMPANY

FED. RD. DIV. NO.	STATE	PROJECT NO.	HIGHWAY NO.
6	TEXAS	CD2452-1-35	LP 1604

STATE DIST. NO.	COUNTY	CNTRL NO.	SECTION NO.	JOB NO.
15	BEXAR	2452	01	035

DRAWN	CHECK	DATE	SHEET
J. HUNKER	DB	10-28-97	1

JOB NO: 97-02721
DESCRIPTION: LOOP 1604

DATE	SYM	REVISION	DR	CK

THE D.S. BROWN COMPANY, INC.
NORTH BALTIMORE, OHIO 45872-0158 U.S.A.

SCALE:
DATE: 10-28-97
DRAWN BY: J. HUNKER

LP 1604 AT HELOTES CREEK
BEXAR COUNTY TEXAS

'SSCM2'-400 EXPANSION JOINT PLAN VIEWS

DRAWING NUMBER 97-02721-01

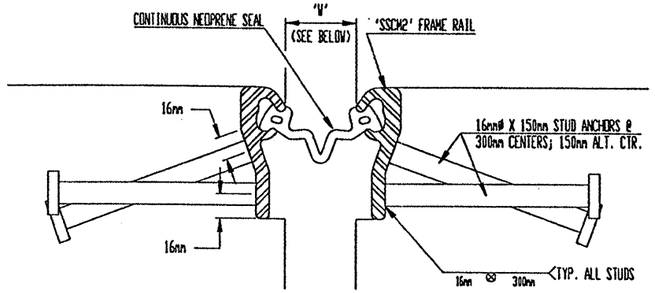

SECTION THRU EXPANSION JOINT

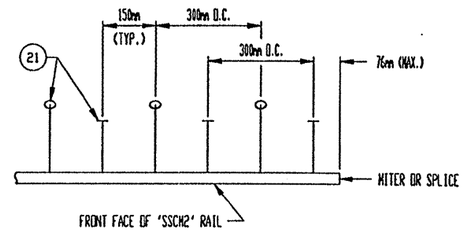

TYP. 16mmø STUD LAYOUT FROM SPLICE

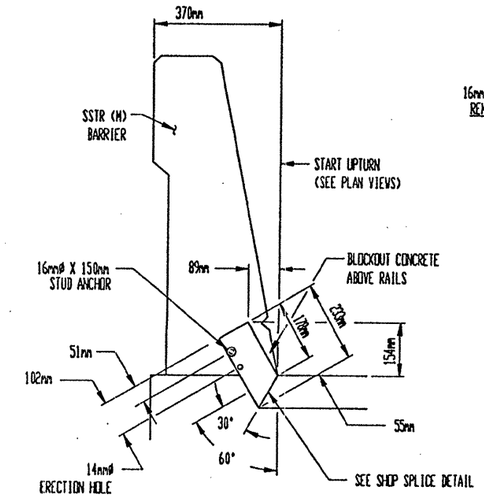

UPTURN DETAIL – LOW SIDE

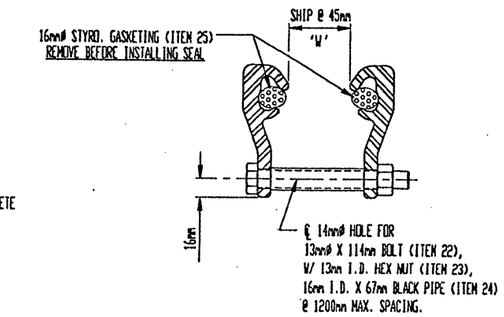

SHIPPING DEVICE

(REMOVE DEVICE PRIOR TO CONCRETE POUR)

STRUCT. TEMP.	'W'
MAX.	13mm
MID.	45mm @ 20°C
MIN.	114mm

'A2R' SERIES STRIP SEAL

MINIMUM JOINT OPENING FOR EASE OF INSTALLATION = 32mm

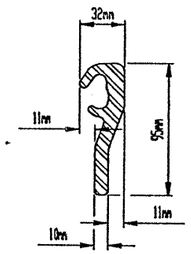

'SSCM2' FRAME RAIL

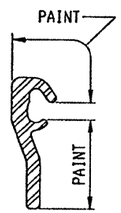

PAINT LIMITS

ITEM NO.	PART NO.	DESCRIPTION		LENGTH MILLIMETERS	MAT'L	FINISH	REMARKS	PLAN VIEW 1	PLAN VIEW 2	TOTAL
1-17	SSCX2-50A36	'SSCM2' FRAME RAIL	.	.	A36	PAINT	FOOTAGE PER PLAN VIEW	46.34M	46.62M	92.96M
21	SD16X152	16mmø STUD ANCHOR	.	152mm	A108	.	.	300	304	604
22	BL13X114	13mm-13 UNC HEX BOLT	.	114mm	.	.	TEMP. SUPPORT	24	24	48
23	NT13	13mm-13 UNC HEX NUT	.	.	.	.	TEMP. SUPPORT	24	24	48
24	BP16X67	16mm I.D. BLACK PIPE	.	67mm	.	.	TEMP. SUPPORT	24	24	48
25	NSX-66	16mmø GASKETING	.	.	STYRO.	.	REMOVE BEFORE INSTALLING SEAL	46.63M	46.63M	93.26M
26	NX 77	LUBRICANT/ADHESIVE	.	.	.	.	GALLON(S)	.	.	1
27	A2R SEAL	'A2R' SERIES STRIP SEAL	.	.	NEO.	.	.	2 @ 11.89M	2 @ 11.89M	47.56M

QUANTITIES LISTED ARE FOR (2) JOINTS TOTAL

QUANTITIES LISTED ARE FOR (2) JOINTS TOTAL

FABRICATION NOTES

AFTER RAILS HAVE BEEN CUT:

1) PUNCH ERECTION HOLES AS SHOWN ON THE PLAN VIEW(S).
2) PLACE STUDS ON RAIL ACCORDING TO THE LAYOUT DETAIL.
3) IF STUD ANCHOR POSITION INTERFERES WITH AN ERECTION HOLE, PLACE THE STUD ANCHOR 38mm TO THE SIDE.
4) IF STUD ANCHOR PLACEMENT EXCEEDS 152mm FROM A MITER OR SPLICE PLACE A STUD @ 76mm FROM MITER OR SPLICE.

GENERAL NOTES

'SSCM2' FRAME RAILS TO BE A36 OR A588.

ALL STUD ANCHORS TO BE ASTM-A108 STEEL.

ALL STUD ANCHORS TO BE ELECTRIC ARC END-WELDED w/ COMPLETE FUSION.

EXPANSION JOINTS TO FOLLOW RDWY. SLOPE.

ONE SHOP SPLICE WILL BE PERMITTED IN EACH SHIPPING LENGTH, PROVIDED NO PIECE IS LESS THAN 610mm IN LENGTH AND SUFFICIENT STUDS ARE ADDED TO LIMIT THE STUD TO SHOP OR FIELD SPLICE DISTANCE TO 51mm MIN. AND 102mm MAX. SHOP SPLICES TO BE LOCATED AS NEEDED.

NEOPRENE SEAL TO BE CONTINUOUS.

ALL ASSEMBLIES TO BE PIECE-MARKED.

SHOP CLEAN AND SHOP PAINT w/ PROTECTION SYSTEM II, PRIME COAT ONLY TO LIMITS SHOWN.

REMOVE ALL BURRS WHICH MAY BE IN CONTACT WITH THE SEAL PRIOR TO MAKING SPLICE.

AFTER BRACING AND WELDING THE STEEL SECTION, THE ERECTION BOLTS AND SPACERS SHALL BE REMOVED AND THE ERECTION HOLES SEALED BEFORE PLACING SLAB CONCRETE.

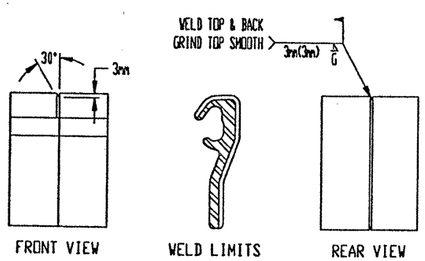

'SSCM2' FIELD SPLICE DETAIL

SEE PLAN VIEWS FOR SHOP PREP. LOCATIONS

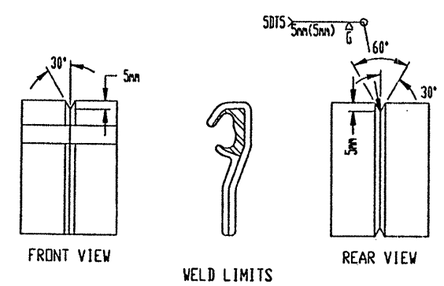

'SSCM2' SHOP SPLICE DETAIL

EXPANSION JOINTS FABRICATED BY:
DELTEX STEEL FABRICATING COMPANY
CONROE, TEXAS 77303
OR
THE D.S. BROWN COMPANY
NORTH BALTIMORE, OHIO 45872

DSB FILE NO: 97-02721\SHT-02

TEXAS DEPARTMENT OF TRANSPORTATION
DEC 19 1997

D.S. BROWN 97-02721-14756 SHEET 2 OF 2

THE D.S.BROWN COMPANY
300 E. CHERRY ST. P.O. BOX 158
NORTH BALTIMORE, OHIO 45872-0158

CONTRACTOR: ACME BRIDGE COMPANY

FED. RD. DIV. NO.	STATE	PROJECT NO.	HIGHWAY NO.
6	TEXAS	CD2452-1-35	LP 1604

STATE DIST. NO.	COUNTY	CNTRL NO.	SECTION NO.	JOB NO.
15	BEXAR	2452	01	035

DRAWN	CHECK	DATE	SHEET
J. HUNKER	AB	10-29-97	2

JOB NO: 97-02721
DESCRIPTION: NB & SB STRUCTURES

DATE	SYM	REVISION	DR	CK

THE D.S. BROWN COMPANY, INC.
NORTH BALTIMORE, OHIO 45872-0158 U.S.A.

SCALE: DATE: 10-29-97 DRAWN BY: J. HUNKER

LP 1604 AT HELOTES CREEK
BEXAR COUNTY TEXAS

'SSCM2'-400 EXPANSION JOINT DETAILS & B.O.M.

DRAWING NUMBER 97-02721-02